Katolight Corporation

100 Power Drive, Mankato, MN 56001 PHONE: 507-625-7973

Katolight Service - Master Repair Manual

Table of Contents

Parts and Service Directory - Rev: 3-23-05..... 11
Katolight's Company History..... 13
PAC - Performance Assurance Certification..... 15
Warranty Procedures..... 17
Five Year PTO Warranty..... 19
Two Year 1500 Hour Warranty..... 21
Five Year 1500 Hour Warranty..... 23
Start-Up Procedures..... 25
Start-Up Request Form..... 27
Start-Up Warranty Inspection Form..... 29
Installaion Manual..... 31
Basic Operation Manual..... 79
Start-Up Operating Instructions..... 111
Weekly Checklist and Explanations..... 113
Katolight Model Number Definitions..... 115
Portable - Series HA-HF .75-1-1.5-2-2.5-3-3.5-4-5 Manual..... 117
Portable - Series HA-HF 2-3.5-5-7.5 Manual..... 155
Portable - Series HA-HF 2-2.5-3-4-5-6.5 Manual..... 171
Portable - Series MGB 2.5-3.5-5-7 Manual..... 187
Portable with Flood Light Tower Spec..... 203
PTO - Series AVR1 Manual..... 205

PTO - Series AVR3 Manual..... 221
PTO - Model KLS1 25kW Manual..... 237
PTO - KLS-KLM Winding Information..... 269
PTO - Series KLM Manual..... 271
PTO - Series LR Manual..... 303
PTO - Series LR Characteristics..... 319
PTO - Series 150S-250S Manual..... 321
PTO - Series TD Manual..... 333
Lighthouse Service Manual for 9kW-15kW..... 349
Lighthouse Service Manual for 25kW..... 385
Brushless Generator Block-Schematics..... 419
KAMAG-14 Generator Characteristics..... 421
KAMAG-14 Generator Manual..... 423
KAMAG-18 Generator Characteristics..... 463
KAMAG-18 Generator Manual..... 465
Kato Brush-Type Generator Manual..... 497
Kato Brushless Generator Manual..... 529
Kato Generator Wiring Diagrams..... 573
Kato Single Bearing Generator Manual..... 577
Kato Single Bearing MTG61 thru MTG85 Generator Manual..... 625
Kato Single or Two Bearing Generator Manual 10-04..... 645
Kato Two Bearing Generator Manual..... 693
MagnaMax Generator Manual..... 733
MagnaMax DVR Generator Manual..... 807
MangnOne Generator Manual..... 881
MagnaPlus Generator Manual..... 929
Generator Fault Finding Manual..... 951
HCI-HCM-HCK 4-5-6-7 Generator Manual..... 981

UCI-UCM-UCD 224 and 274 Generator Manual..... 1017
APR63-5 Regulator Manual..... 1059
APR125-5 Regulator Manual..... 1077
DVR 2000 Regulator Manual..... 1099
DVR 2000E Regulator Manual with 5/6..... 1133
K65-12B or K125-10B Regulator Manual..... 1227
KAVC63-4 Regulator Manual..... 1251
KCR 160 Regulator Manual..... 1255
KCR 360 Regulator Manual..... 1279
KCR 760 Regulator Manual..... 1343
KR2F, KR4F and KR7F Regulator Manual..... 1383
KR4FFX and KR7FFX Regulator Manual..... 1409
LS65-12B Regulator Manual..... 1413
LSA47-2 Regulator Manual..... 1447
MX 321 Regulator Brochure..... 1475
MX 341 Regulator Brochure..... 1489
PM100 and PM200 Regulator Manual..... 1507
SE100 Regulator Brochure..... 1535
SE250 and SE400 Regulator Brochure..... 1539
SE350 Regulator Brochure..... 1543
SR4A-SR8A Regulator Manual..... 1547
SSR32-12 - 63-12 - 125-12 Regulator Manual..... 1583
SX 440 Regulator Brochure..... 1619
SX 460 Regulator Brochure..... 1635
VR63-4 Regulator Manual..... 1649
VR485 Regulator Manual..... 1651
Economy Control Panel..... 1663
40 Series Control Panel..... 1665

45 Series Control Panel..... 1667
50 Series Control Panel..... 1669
60 Series Control Panel..... 1671
80 Series Control Panel..... 1673
DC Voltage Sensing Relay Control..... 1675
DC Wiring Diagram 819-B-8461 (Standard 45)..... 1677
PP Wiring Diagram 819-B-8462 (Standard 45)..... 1679
DC Wiring Diagram 819-B-11400 (Standard 45)..... 1681
PP Wiring Diagram 819-B-11413 (Standard 45)..... 1683
DC Wiring Diagram 819-C-4749 (Standard 50)..... 1685
DC Wiring Diagram 819-C-5004 (Standard 50)..... 1687
DC Wiring Diagram 819-C-5791 (Standard 50)..... 1689
DC Wiring Diagram 819-C-5793 (Standard 50)..... 1691
AC Wiring Diagram 819-B-10701 (120/240 - 1P)..... 1693
AC Wiring Diagram 819-B-10702 (120/240 - 3P)..... 1695
AC Wiring Diagram 819-B-10703 (120/208 - 3P)..... 1697
AC Wiring Diagram 819-B-10704 (277/480 - 3P)..... 1699
AC Wiring Diagram 819-B-10775 (KGM-250)..... 1701
DC Wiring Diagram 819-B-11185 (KGM-250)..... 1703
AC Wiring Diagram 819-B-12668 (KDGC-500)..... 1705
DC Wiring Diagram 819-B-12164 (KDGC-500)..... 1707
DC Wiring Diagram 819-B-12167 (KDGC-500 with Canbus)..... 1709
AC Wiring Diagram 819-B-12528 (KDGC-2001)..... 1711
EasyGen Control Installation Manual..... 1713
EasyGen Control Operation Manual..... 1761
KASSEC Control 1.5 Bulletin..... 1799
KASSEC Control Spec Sheet..... 1801
KDGC 500 Control Manual..... 1807

KDGC 2000 Control Manual..... 1957
KDGC 2001 Control Manual..... 2055
KGM 250 Control Manual..... 2171
KLAS Control 3-D3 Spec..... 2187
KLAS Control 10-D10 Spec..... 2189
KLAS Control 20-D20 Spec..... 2191
KLAS Control 30-D30 Spec..... 2193
KLAS Control 33-D33 Spec..... 2195
KLAS Control 40-D40 Spec..... 2197
KLAS Control 50-D50 Spec..... 2199
KLAS Control 60-D60 Spec..... 2201
KLAS Control 61-D61 Spec..... 2203
KLAS Control 103-110 Spec..... 2205
KLAS Control 103-110 Brochure..... 2207
KLAS Control 120-130 Spec..... 2211
KLAS Control 120-130 Brochure..... 2213
KLAS Control 133 Spec..... 2217
KLAS Control 133 Brochure..... 2219
KLAS Control 261-262 Spec..... 2223
KLAS Control 261-262 Brochure..... 2225
KLAS Control Drawing 812-007-2..... 2229
Low Water Level Control Drawing Pre-1994..... 2231
Low Water Level Control Drawing Post-1997..... 2233
Murphy Safety Control Drawing 816-A-001-1..... 2235
Pre-shutdown Alarm Control Drawing 818-009..... 2237
Remote Start Control Drawing 812-42-1..... 2239
SM 124 Speed Monitor Control Spec..... 2241
SSW Speed Control Switch Brochure..... 2243

4 Light - 12 Wire Annunciator Control Spec..... 2249
12 Light - 12 Wire Annunciator Control Spec..... 2251
16 Light - 2 Wire Annunciator Control Spec..... 2253
16 Light - 2 Wire Annunciator Control Interconnect Cable Spec..... 2255
easYlite Annunciator Manual..... 2257
KRA 100 Annunciator Control Manual..... 2301
KRDP 110 Annunciator Control Manual..... 2305
KRDP 110 Annunciator Control Connection KL2B17..... 2321
AA Battery Charger Manual..... 2323
AE Battery Charger Spec..... 2331
AE Battery Charger Manual..... 2333
Battery Tender - Battery Charger Manual..... 2341
CI Battery Charger Spec..... 2351
CI Battery Charger Manual..... 2353
FC-FCA 20-25Amp Battery Charger Manual..... 2361
FC-FCA 6-10Amp Battery Charger Manual..... 2375
GUEST 2-Stage 6Amp-12V Battery Charger Manual..... 2387
GUEST 2605A 5Amp-24V Battery Charger Manual..... 2395
GUEST 2608 6Amp-12V Battery Charger Manual..... 2403
Interacter or LS Battery Charger Spec..... 2411
Interacter or LS Battery Charger Manual..... 2413
LC Battery Charger Manual..... 2421
NRG 12-24V 20Amp Battery Charger Manual..... 2425
05BB65 Portable Battery Charger Manual..... 2443
12SS12 - 24SS12 Solid State Battery Charger Spec..... 2491
Trickle Battery Charger Spec..... 2493
100 Series Actuator Brochure..... 2495
120 Series Actuator Brochure..... 2501

225 Series Actuator Brochure..... 2507
275 Series Actuator Brochure..... 2513
BOSCH Governor Brochure..... 2519
DDEC Governor Fault Codes Brochure..... 2523
DDEC Governor Fault Codes Spec..... 2535
DPG Governor Manual..... 2537
DYNA 8000, 8200 and 8400 Governor Manual..... 2581
DYNA I Smoke Limit Governor Brochure..... 2599
DYNA Power Governor - Plus 1, Plus 4 and Plus 6 Manual..... 2603
EDC III Governor Manual..... 2621
EFC Governor Manual..... 2709
EFC Governor Wiring Daigrams..... 2763
ESD 2100 Series Governor Brochure..... 2765
ESD 2200 Series Governor Brochure..... 2773
ESD 5100 Series Governor Brochure..... 2781
ESD 5500 Series Governor Brochure..... 2789
Flo-Tech Governor Installation Manual..... 2797
Flo-Tech Governor Speed Manual..... 2821
JDEC Governor Spec..... 2857
JDEC 4.5L-6.8L Governor Manual..... 2861
JDEC 8.1L Governor Manual..... 2909
JDEC 12.5L Governor Manual..... 2949
L-Series Governor Manual..... 2989
LC-50 Governor Manual..... 3111
MDEC Governor Connections Spec..... 3191
MDEC Governor Fault Codes Manual..... 3193
MDEC Governor Manual..... 3205
ProAct I-II Governor Manual..... 3375

QST30 Governor Manual..... 3455
QSX15-QSK45-60 Governor Manual..... 3595
ATS - ASCO 165 Application Manual..... 3739
ATS - ASCO 165 Lighthouse Control Panel Differences..... 3747
ATS - ASCO 165 Lighthouse 9kW-15kW Voltage Check..... 3749
ATS - ASCO 300 Addendum for 1000-1200Amp Switches..... 3751
ATS - ASCO 300 Dip Switch Settings Spec..... 3753
ATS - ASCO 300 Enclosure and Wiring Diagrams..... 3755
ATS - ASCO 300D 30-230Amp Manual..... 3759
ATS - ASCO 300E 260-400Amp Manual..... 3779
ATS - ASCO 300G 1000-3000Amp Manual..... 3799
ATS - ASCO 300H 600-1200 Amp Manual..... 3817
ATS - ASCO 7000 30-4000Amp Manual..... 3837
ATS - ASCO 7000 Series User Guide Manual..... 3849
ATS - ASCO 7000 Series Enclosure Drawings..... 3881
ATS - ASCO 7000 Series Wiring Diagrams..... 3883
ATS - ASCO 940 Manual..... 3889
ATS - Cutler-Hammer ATC300 Technical Data..... 3933
ATS - Cutler-Hammer ATC300 Manual..... 3941
ATS - Cutler-Hammer ATC400 Technical Data..... 3981
ATS - Cutler-Hammer ATC400 Manual..... 3989
ATS - Cutler-Hammer ATV Series 30-1000Amp Manual..... 4037
ATS - Cutler-Hammer ATVM-ATHM 30-1000Amp Manual..... 4077
ATS - Cutler-Hammer Panelboards Manual..... 4121
ATS - Thomson Technology TSC800 Manual..... 4153
ATS - Thomson Technology TS840 Manual..... 4205
ATS - Westinghouse Solid Logic 100-1000Amp Manual..... 4241
ATS - Westinghouse Relay Logic 30-1000Amp Manual..... 4265

ATS - Zenith Coil Test..... 4281
ATS - Zenith MX100 Jumpers Chart..... 4283
ATS - Zenith MX100 Manual..... 4285
ATS - Zenith MX150 Manual..... 4309
ATS - Zenith MX200 Manual..... 4337
ATS - Zenith MX250 Manual..... 4373
ATS - Zenith MX150 and MX250 Replacement Manual..... 4405
ATS - Zenith ZTG-ZTGD 40-3000 Manual..... 4413
ATS - Zeinth ZTG-ZTGD 40-3000 Drawing Manual..... 4449
ATS - Zenith ZTS-ZTSD 40-4000 Manual..... 4537
ATS - Zenith ZTSH Manual..... 4577
ATS - Zenith ZTX 40-400 Manual..... 4605
ATS - Zenith and ASCO Exercise Clocks Options..... 4623

Parts and Service Directory

Name	Title	E-mail	Ext. #
Jeff Scholten	Parts & Service Manager	jeffs@katolight.com	8649
Carol Berndt	Parts & Service Administrative Assistant Preventative Maintenance Coordinator	carolb@katolight.com	8620
Todd Riemann	Power Generation Specialist Director of Factory Training	toddr@katolight.com	8607
John Haack	Factory Training Instructor	johnh@katolight.com	8602
Charlie Trier	Parts Specialist	charliet@katolight.com	8608
Martha Rademacher	Parts Sales	marthar@katolight.com	8633
Roger Normandin	Parts Specialist & Customer Support Technician	rogern@katolight.com	8610
Tom Rudie	Customer Support Technician	trudie@katolight.com	8617
Dan Goebel	Field Service Coordinator	dgoebel@katolight.com	8646
Michael Danberry	Warranty & Quality Administrator	mdanberry@katolight.com	8640

3/23/05

History

A History of Meeting Industry's Need For Power



Since 1952, Katolight generator sets have been helping customers meet their need for reliable power for a myriad of applications including communications, hospitals, government and agricultural confined livestock and greenhouse operations.

Katolight began its dependable power story by serving agribusinesses in the heart of the Midwest farm belt. Today, Katolight generator sets can be found in thousands of places around the world, such as the National Institute of Health in Washington, D.C., the Beijing Newspaper in China, Telesat-Satellite Communications in Macau, Bonneville Power Authority of Oregon and Washington. Katolight generator sets also power hospitals, factories, government and agricultural installations across the United States.

Katolight provides generator sets that meet the growing demands of many varied and diverse market segments. Katolight's technical knowledge in the field of power generation has led to the development of diesel and gaseous powered generator sets used around the world.

The widespread acceptance of Katolight equipment reflects the company's reputation for quality and reliability in design, manufacturing and service. Katolight places great value on the establishment of long-term relationships with its customers and distributors, which is evident in the company's superior level of technical support and our emphasis on customer service.

Katolight has a great deal of successful experience in projects involving the development of generator sets to meet critical specifications. Much of this equipment has been produced to strict government performance and construction specifications. Katolight can design, produce and test engine generator sets to demanding quality and performance requirements.

Katolight's product line uses liquid cooled diesel, natural gas and liquid petroleum gas engines in sets ranging in size from 15 kW to 2800 kW. Systems feature standard or special controls, as well as components and switchgear to meet specifications. Katolight generator sets are designed to satisfy utility or special purpose applications.

Katolight currently operates out of over 110,000 square feet of manufacturing and office space with more than 160 employees and a national and international distribution network. Katolight customers continue to benefit directly from over 50 years of experience and flexibility.

Contact Katolight's marketing department for a seven minute video about the company.

KATOLIGHT CORPORATION

Performance Assurance Certification

The Performance Assurance Certification provided by Katolight Corporation certifies that each model and every production unit will reliably produce its rated output with all accessories with the selected fuel.

Katolight Corporation's Performance Assurance Certification is the most complete and extensive testing in the engine generator industry. It has always been the standard test performance of Katolight Corporation.

The Standard Unit Will Include:

- Full load at rated PF and maximum load, to verify engine power, overload and maximum capability.
- KVA, kilowatts, amperes, voltage. Frequency and voltage transients at one half and rated load. Frequency at: no load, full rated load and maximum output.
- Regular range (adjust), phase sequence, phase voltage balance.
- Stator and exciter field resistance.
- Insulation test, generator field, exciter armature, exciter field, generator armature or stator.
- Dielectric test, generator field, exciter armature, exciter field, generator armature or stator.
- All safety shutdown and automatic controls.
- Lube oil pressure (if applicable), water temperature (if applicable), battery charger (if applicable).
- Jacket water heaters and/or lube oil starting aids.
- Accessories (annunciator panel, chargers, pumps, transfer switches) as supplied.

Standard test procedures are per MIL-STD-705 test methods. Katolight Corporation is capable of performing complete MIL-STD-705 testing for critical, precise power, government and military installations.

Application performance is certified by Katolight for every unit manufactured. Our company's philosophy and performance are regularly reviewed to ensure continuity of the program and conformance with national and other codes or regulations affecting generator systems such as:

- NFPA 99—Health Care Facilities
- NFPA 70—National Electrical Code
- NFPA 110—Emergency and Standby Power Systems
- State of Pennsylvania Department of Labor and Industry

MIL-STD-705 Methods

301.1b	Insulation Resistance Test
302.1a	High Potential Test
401.1a	Winding Resistance Test
410.1a	Open Circuit Saturation Curve Test
503.1b	Start and Stop Test
505.2a	Over Speed Protective Device Test
507.1c	Phase Sequence Test (Rotation)
508.1c	Phase Balance Test (Voltage)
510.1c	Rheostat Range Test
511.1c	Regulator Range Test
511.2b	Frequency Adjustment Range Test
513.2	Indicating Instrument Test (Electrical)
515.1a	Low Oil Pressure Protective Device Test
515.2a	Over Temperature Protective Device Test
516.1	Controls, Direction of Rotation
640.1c	Maximum Power Test

Warranty Claim Information and Procedures

A fully completed start-up sheet must be submitted within 30 days of the start-up date. Without a valid, completed start-up sheet the warranty period will begin on the invoice date. All start-ups are to be completed within 12 months of invoice date. If this is not done, recertification of the unit or engine as required by some engine manufactures may be necessary to gain warranty status.

All warranty claims must be completed and submitted on a Katolight Warranty claim form that has a serialized number preprinted on the form. The pre-printed claim number is an authorization number that is used for tracking purposes only; it is not an approval number for payment. Warranty claims can be requested by contacting Katolight's Warranty Department.

All warranty claim forms must be completed in detail stating the complaint, cause and correction of the problem. When appropriate, pictures should be sent that show the problem and solution so that Katolight can rectify future situations.

All warranty claims must be received within 60 days of warranty repair. Warranty claims will only be processed and paid from a completed Katolight Warranty Claim form. Any other type of document submitted by itself, such as an invoice, will not be processed and will be returned to the appropriate service center. Submitting an invoice with the completed warranty claim form is acceptable and encouraged. After 60 days from the date of repair, if a warranty claim is submitted, the warranty claim will be subject for denial unless extenuating circumstances are communicated to Katolight prior to the end of the initial 60 day time period.

When Katolight request additional information (verbally or in writing) to help process a warranty claim, the information must be provided within 60 days from the date of request or the claim is subject to denial.

Defective parts must be shipped with the completed claim form within the 60 day time frame described above. Returned parts must be clearly identified with the serialized number that is printed on the claim form. If you have question as to feasibility of returning parts, please contact our warranty department. The warranty will not be approved until Katolight's Warranty and/or Service Department evaluates all parts. If the parts are not returned within the 60 day time frame, the warranty claim will be subject for denial unless extenuating circumstances are communicated to Katolight prior to the end of the initial 60 day time period.

Rate Agreements: Warranty rates for Shop Labor, Site Labor, Travel Labor, and Mileage must be approved and on record with the factory prior to commencing any warranty work. Sub-contracted warranty work will be paid at actual cost not exceeding the Service Station Rate Agreement.

Rates noted on the claim form must not exceed the rate agreement with the factory. If the rates are overstated on the warranty claim form, they will be subject to adjustment and the claim will be processed to avoid delay. The factory must approve any rate changes. If Katolight adjusts the claim amount, a copy of the submitted warranty claim form will be sent with the credit invoice showing where the adjustments were made.

Warranty Settlements: An approved warranty claim settlement will be processed as a warranty credit invoice; the warranty credit invoice will be mailed to the Service Center to the address on file with Katolight.

Warranty Denial: All denials will be addressed in a letter explaining reason for denial and will be addressed to the Service Center Service Department.

Contesting a Denied Warranty: Warranty claim denial can be contested within 30 days from the date of the denial. A detailed letter stating the reason or reasons for contesting the denial must be sent to Katolight Warranty Department for review. This also applies to claims that have had rate adjustments.

Site Labor: Site labor will be limited to reasonable time required to trouble shoot a problem, perform the actual warranty repair, and test as directed by the factory. This shall not include any excess time due to facility restrictions, special training required at site, removal or reinstallation of equipment that is not part of the generator set as supplied by the factory, or delays that are created by a facility which are beyond Katolight's control. All site labor is subject to the rate agreement with Katolight Corp.

Travel Labor / Mileage: Travel time and mileage charges are limited to the lessor of: a) Maximum of 400 miles roundtrip or b) Roundtrip miles from the nearest authorized service center to the site or, c) Actual miles traveled. All travel labor and mileage rates are subject to the rate agreement with Katolight Corp.

Warranty Claim Package should contain the following:

a. Completed serialized Katolight Warranty Claim form.
b. Any supporting documents for the claim, for example: Work Orders / tickets, receipts / invoices for parts, and invoice (optional).
c. Photos (digital or standard snapshots), if appropriate.
d. Defective part(s) if applicable.
e. Package must be clearly marked with the serialized number that is printed on the warranty claim form.

Contact Information: Warranty and Quality Administrator: Michael A. Danberry
Phone: 507-625-7973 or 800-325-5450 ext. 8640, Direct Line: 507-385-8640
Fax: 507-625-2247
E-mail: Mdanberry@Katolight.com

Rev 20050203

KATOLIGHT CORPORATION
PTO DRIVEN ALTERNATOR
STANDBY LIMITED WARRANTY

"FIVE YEAR"

Your Katolight Product has been manufactured and inspected with care by experienced craftspeople. If you are the original consumer, Katolight Corporation warrants, for the period indicated below, each product to be free from defects in materials and workmanship. Repair, replacement or appropriate adjustment at Katolight Corporation's option will be furnished if the product, upon Katolight Corporation's inspection, is properly installed, maintained and operated in accordance with Katolight Corporation instruction manuals. This warranty does not apply to malfunctions caused by damage, unreasonable use, misuse, repair or service by unauthorized persons, or normal wear and tear.

KATOLIGHT PRODUCT PERIOD OF WARRANTY: PTO Driven Alternator complete with Gear Box: Five (5) years parts, site and / or shop labor for the first two (2) years from date of purchase. Accessories: One (1) year parts and site or shop labor form date of purchase.

For a description of accessories and exclusions from this limited warranty, review the listings on the reverse side of this document.

TO OBTAIN WARRANTY SERVICE: Contact your nearest Katolight Service Representative by calling or writing Katolight Corporation. Attention: Service Department. (See address and telephone below.)

Katolight shall not be liable for any claim greater in amount than the purchase price of the product, in respect of which such claim is made, and in no event shall Katolight be liable for any special, indirect or consequential damages.

THERE ARE NO EXPRESS WARRANTIES OTHER THAN THOSE DESCRIBED HEREIN. NO WARRANTIES SHALL BE IMPLIED OR OTHERWISE CREATED UNDER THE UNIFORM COMMERCIAL CODE, INCLUDING BUT NOT LIMITED TO A WARRANTY OF MERCHANTABILITY, AND A WARRANTY OF FITNESS FOR A PARTICULAR PURPOSE.

State laws regarding rights of consumers may vary from state to state.

KATOLIGHT CORPORATION
100 Power Drive / PO Box 3229
Mankato, MN 56002-3229
Phone: (507) 625-7973 / Fax: (507) 625-2247 www.Katolight.com

1. The following items are among those that are not considered nor will they be covered under the existing warranty program.
   a. Normal maintenance costs.
   b. Non-Katolight replacement part(s) will void the entire limited warranty.
   c. Products that are modified in any form without the written consent of Katolight will void the entire limited warranty.
   d. Shipping damage of any type. All equipment is shipped F.O.B. factory and is consigned to the carrier once loaded for shipment. It is the responsibility of the receiver to sign and note any damage to the equipment and a freight damage claim filed by the receiver.
   e. Any installation errors or damage of the equipment when shipped as ordered.
   f. Any overtime labor to make repairs under warranty.
   g. Any special access fees required to gain access to Katolight equipment not limited to but including any training or safety policy requirements to gain access.
   h. Additional costs associated with inaccessible installations, including removal and reinstallation of the generator.
   i. Rental equipment used during warranty work such as generators, rigging equipment such as a crane or boom truck, tractors, load banks and special testing above factory requirements, etc.
   j. Misuse or abuse including installation and thereafter.
   k. Normal wear and tear, maintenance and consumable items that are not required as part of a warranty repair. Consumable items include but are not limited to gear lube and fuses.
   l. Acts of nature such as lightning, wind, flood, or earthquake.
   m. Any damage due to situations beyond the control of the manufacturing of the product or workmanship of the product.
   n. Installation or operation outside the guidelines as stated in the Installation Guide and Owners Manual.
   o. Misapplication of the equipment such as usage outside the original design parameters as stated on the nameplate of the equipment.
   p. Shaft or spline damage caused by improper shaft alignment.
   q. Damage from improper storage when not in use.
   r. Any repair labor time that is determined to be excessive, e.g., two or more people performing a one-person job.
   s. Any expenses associated with investigating performance complaints in which no defect is found.
   t. Any associated costs for replacing components that are found not to be defective.

2. The aforementioned is a representation of things not covered by the standard "**LIMITED WARRANTY".** If there are questions as to warranty coverage it is advisable to contact the factory in advance of filing a claim.

3. The accessories that are limited to one (1) year parts and labor include but are not limited to:
   a. Tap changing switches
   b. Circuit Breakers
   c. Cords and receptacles.
   d. Trailer
   e. PTO Shaft
   f. Manual Transfer Switches

Rev: 20030508

KATOLIGHT CORPORATION
STANDBY LIMITED WARRANTY

"TWO YEAR 1500 HOURS"

Your Katolight Product has been manufactured and inspected with care by experienced craftspeople. If you are the original consumer, Katolight Corporation warrants, for the period indicated below, each product to be free from defects in materials and workmanship. Repair, replacement or appropriate adjustment at Katolight Corporation's option will be furnished if the product, upon Katolight Corporation's inspection, is properly installed, maintained and operated in accordance with Katolight Corporation instruction manuals. This warranty does not apply to malfunctions caused by damage, unreasonable use, misuse, repair or service by unauthorized persons, or normal wear and tear.

KATOLIGHT PRODUCT PERIOD OF WARRANTY: Engine Generator Set: Parts and Labor for two (2) years or 1500 hours from the date of invoice by factory. Accessories: Parts and labor for one (1) year from date of invoice from factory. Transfer switches: If purchased with a generator set: Parts and labor for two (2) years from date of invoice by factory. The warranty period can be adjusted to the date of start up if completed within twelve (12) months of invoice date. A valid warranty requires that: (1) the Katolight start-up validation form must be completed, returned with in 30 days of start-up date and on file at Katolight Corporation. (2) the engine registration form must be completed and returned to manufacturer as stated in the instructions with registration form. And (3) all supporting maintenance records must be kept on file with the end user and made available upon request from factory. The generator set must be routinely exercised in accordance with operating instructions. Engine generator sets that are stored longer than six (6) months (180 days) from date of shipment are subjected to special requirements. Contact Katolight's Factory Service Center for instructions

For a description of accessories and exclusions from this limited warranty, review the listings on the reverse side of this document.

TO OBTAIN WARRANTY SERVICE: Contact your nearest Katolight Service Representative. For assistance in locating your nearest authorized service representative, contact Katolight Corporation, Attention: Service Department. (See contact information below.)
Warranty service may only be performed by Katolight authorized service providers. Service performed by unauthorized persons will void all warranties.

Katolight shall not be liable for any claim greater in amount than the purchase price of the product, in respect of which such claim is made, and in no event shall Katolight be liable for any special, indirect or consequential damages.

THERE ARE NO EXPRESS WARRANTIES OTHER THAN THOSE DESCRIBED HEREIN. NO WARRANTIES SHALL BE IMPLIED OR OTHERWISE CREATED UNDER THE UNIFORM COMMERCIAL CODE, INCLUDING BUT NOT LIMITED TO A WARRANTY OF MERCHANTABILITY, AND A WARRANTY OF FITNESS FOR A PARTICULAR PURPOSE.

State laws regarding rights of consumers may vary from state to state.

KATOLIGHT CORPORATION
100 Power Drive / PO Box 3229
Mankato, MN 56002-3229
Phone: (507) 625-7973 / Fax: (507) 625-2247 www.Katolight.com

1. The following items are among those that are not considered nor will they be covered under the existing warranty program.
   a. Battery or Batteries of any type or kind. The Battery Manufacturer warranty applies to these only. Any warranty for such, should be handled with the manufacturer's local distributor according to their policies.
   b. Adjustments to fuel systems or governor system at time of start up or any time after. This is acceptable only when a defective part has been replaced, returned to the factory and approved as defective.
   c. Normal maintenance costs: adjustments, loose/leaking fittings or clamps, and tune-ups performed during start up or anytime thereafter.
   d. Due to shipping, manufacture is not responsible for loose connections. All connections must be checked at time of start-up.
   e. Non-Katolight replacement part(s) will void the entire limited warranty.
   f. Products that are modified in any form without the written consent of Katolight will void the entire limited warranty.
   g. Shipping damage of any type. All equipment is shipped F.O.B. factory and is consigned to the carrier once loaded for shipment. It is the responsibility of the receiver to sign and note any damage to the equipment and a freight damage claim filed by the receiver.
   h. Any installation errors or damage of the equipment when shipped as ordered.
   i. Any overtime travel or labor to make repairs under warranty.
   j. Any special access fees required to gain access to Katolight equipment not limited to but including any training or safety policy requirements to gain access.
   k. Additional costs associated with inaccessible installations, including removal and reinstallation of the generator set.
   l. Rental equipment used during warranty work such as Generators, rigging equipment such as a crane or boom truck, load banks and special testing above factory requirements, etc.
   m. Excess mileage charges. Any authorized service provider may perform warranty service anywhere, but will only be paid travel from the nearest service center and limited to 400 miles round trip.
   n. Any equipment not factory approved and engineered for use on Katolight products. This includes but is not limited to after market items such as special fuel systems, enclosures, exhaust systems, or switch gear that had been sought out and quoted by a third party to be included in billing of the Katolight equipment.
   o. Misuse or abuse including installation and thereafter.
   p. Normal wear and tear, maintenance and consumable items that are not required as part of a warranty repair. Consumable items include but are not limited to belts, hoses, coolant, oil, filters, and fuses.
   q. Acts of nature such as lightning, wind, flood, or earthquake.
   r. Any damage due to situations beyond the control of the manufacturing of the product or workmanship of the product.
   s. Installation or operation outside the guidelines as stated in the Installation Guide and Owners Manual.
   t. Diesel engine "Wet Stacking" due to lightly loaded diesel engines.
   u. Misapplication of the equipment such as usage outside the original design parameters as stated on the nameplate of the equipment.
   v. Travel expense on portable equipment.
   w. Trailer lights, wiring and brakes.
   x. More than one trip to job-site because Service Vehicle was not stocked with normal service parts.
   y. Lodging expense of person(s) performing service unless approved in advance by factory.
   z. Engine fluids.
   aa. Units purchased at the Standby Power rating that are being used in a prime power application.
   bb. Any repair labor time that is determined to be excessive, e.g., two or more people performing a one-person job.
   cc. Any expenses associated with investigating performance complaints in which no defect is found.
   dd. Any associated costs for replacing components that are found not to be defective.
   ee. Any adjustments covered in the start-up and inspection forms that are to be completed during start-up.

2. The aforementioned is a representation of things not covered by the **"LIMITED WARRANTY"**. If there are questions as to warranty coverage it is advisable to contact the factory in advance of filing a claim.

3. The accessories that are limited to one (1) year parts and labor include but are not limited to:
   a. Battery Chargers
   b. Water Heaters
   c. Load Banks
   d. Tap changing switches
   e. Circuit breakers
   f. Day tank pumps and controls
   g. Hand priming pumps
   h. Oil leveler systems
   i. Strip heaters
   j. Gas solenoid valves
   k. Gas flex pipes
   l. Cords, receptacles and cord reels
   m. Housing lights, space heaters and associated equipment.

Rev: 20031021

KATOLIGHT CORPORATION
STANDBY LIMITED WARRANTY

"FIVE YEAR 1500 HOURS"

Your Katolight Product has been manufactured and inspected with care by experienced craftspeople. If you are the original consumer, Katolight Corporation warrants, for the period indicated below, each product to be free from defects in materials and workmanship. Repair, replacement or appropriate adjustment at Katolight Corporation's option will be furnished if the product, upon Katolight Corporation's inspection, is properly installed, maintained and operated in accordance with Katolight Corporation instruction manuals. This warranty does not apply to malfunctions caused by damage, unreasonable use, misuse, repair or service by unauthorized persons, or normal wear and tear.

KATOLIGHT PRODUCT PERIOD OF WARRANTY: Engine Generator Set: Parts for five (5) years including labor for the first two (2) years or 1500 hours from the date of invoice by factory. Accessories: Parts and labor for one (1) year from date of invoice from factory. Transfer switches: If purchased with a generator set: Parts and labor for two (2) years from date of invoice by factory. The warranty period can be adjusted to the date of start up if completed within twelve (12) months of invoice date. A valid warranty requires that: (1) the Katolight start-up validation form must be completed, returned with in 30 days of start-up date and on file at Katolight Corporation. (2) the engine registration form must be completed and returned to manufacturer as stated in the instructions with registration form. And (3) all supporting maintenance records must be kept on file with the end user and made available upon request from factory. The generator set must be routinely exercised in accordance with operating instructions. Engine generator sets that are stored longer than six (6) months (180 days) from date of shipment are subjected to special requirements. Contact Katolight's Factory Service Center for instructions

For a description of accessories and exclusions from this limited warranty, review the listings on the reverse side of this document.

TO OBTAIN WARRANTY SERVICE: Contact your nearest Katolight Service Representative. For assistance in locating your nearest authorized service representative, contact Katolight Corporation, Attention: Service Department. (See contact information below.)
Warranty service may only be performed by Katolight authorized service providers. Service performed by unauthorized persons will void all warranties.

Katolight shall not be liable for any claim greater in amount than the purchase price of the product, in respect of which such claim is made, and in no event shall Katolight be liable for any special, indirect or consequential damages.

THERE ARE NO EXPRESS WARRANTIES OTHER THAN THOSE DESCRIBED HEREIN. NO WARRANTIES SHALL BE IMPLIED OR OTHERWISE CREATED UNDER THE UNIFORM COMMERCIAL CODE, INCLUDING BUT NOT LIMITED TO A WARRANTY OF MERCHANTABILITY, AND A WARRANTY OF FITNESS FOR A PARTICULAR PURPOSE.

State laws regarding rights of consumers may vary from state to state.

KATOLIGHT CORPORATION
100 Power Drive / PO Box 3229
Mankato, MN 56002-3229
Phone: (507) 625-7973 / Fax: (507) 625-2247 www.Katolight.com

1. The following items are among those that are not considered nor will they be covered under the existing warranty program.
   a. Battery or Batteries of any type or kind. The Battery Manufacturer warranty applies to these only. Any warranty for such, should be handled with the manufacturer's local distributor according to their policies.
   b. Adjustments to fuel systems or governor system at time of start up or any time after. This is acceptable only when a defective part has been replaced, returned to the factory and approved as defective.
   c. Normal maintenance costs: adjustments, loose/leaking fittings or clamps, and tune-ups performed during start up or anytime thereafter.
   d. Due to shipping, manufacture is not responsible for loose connections. All connections must be checked at time of start-up.
   e. Non-Katolight replacement part(s) will void the entire limited warranty.
   f. Products that are modified in any form without the written consent of Katolight will void the entire limited warranty.
   g. Shipping damage of any type. All equipment is shipped F.O.B. factory and is consigned to the carrier once loaded for shipment. It is the responsibility of the receiver to sign and note any damage to the equipment and a freight damage claim filed by the receiver.
   h. Any installation errors or damage of the equipment when shipped as ordered.
   i. Any overtime travel or labor to make repairs under warranty.
   j. Any special access fees required to gain access to Katolight equipment not limited to but including any training or safety policy requirements to gain access.
   k. Additional costs associated with inaccessible installations, including removal and reinstallation of the generator set.
   l. Rental equipment used during warranty work such as Generators, rigging equipment such as a crane or boom truck, load banks and special testing above factory requirements, etc.
   m. Excess mileage charges. Any authorized service provider may perform warranty service anywhere, but will only be paid travel from the nearest service center and limited to 400 miles round trip.
   n. Any equipment not factory approved and engineered for use on Katolight products. This includes but is not limited to after market items such as special fuel systems, enclosures, exhaust systems, or switch gear that had been sought out and quoted by a third party to be included in billing of the Katolight equipment.
   o. Misuse or abuse including installation and thereafter.
   p. Normal wear and tear, maintenance and consumable items that are not required as part of a warranty repair. Consumable items include but are not limited to belts, hoses, coolant, oil, filters, and fuses.
   q. Acts of nature such as lightning, wind, flood, or earthquake.
   r. Any damage due to situations beyond the control of the manufacturing of the product or workmanship of the product.
   s. Installation or operation outside the guidelines as stated in the Installation Guide and Owners Manual.
   t. Diesel engine "Wet Stacking" due to lightly loaded diesel engines.
   u. Misapplication of the equipment such as usage outside the original design parameters as stated on the nameplate of the equipment.
   v. Travel expense on portable equipment.
   w. Trailer lights, wiring and brakes.
   x. More than one trip to job-site because Service Vehicle was not stocked with normal service parts.
   y. Lodging expense of person(s) performing service unless approved in advance by factory.
   z. Engine fluids.
   aa. Units purchased at the Standby Power rating that are being used in a prime power application.
   bb. Any repair labor time that is determined to be excessive, e.g., two or more people performing a one-person job.
   cc. Any expenses associated with investigating performance complaints in which no defect is found.
   dd. Any associated costs for replacing components that are found not to be defective.
   ee. Any adjustments covered in the start-up and inspection forms that are to be completed during start-up.

2. The aforementioned is a representation of things not covered by the **"LIMITED WARRANTY"**. If there are questions as to warranty coverage it is advisable to contact the factory in advance of filing a claim.

3. The accessories that are limited to one (1) year parts and labor include but are not limited to:
   a. Battery Chargers
   b. Water Heaters
   c. Load Banks
   d. Tap changing switches
   e. Circuit breakers
   f. Day tank pumps and controls
   g. Hand priming pumps
   h. Oil leveler systems
   i. Strip heaters
   j. Gas solenoid valves
   k. Gas flex pipes
   l. Cords, receptacles and cord reels
   m. Housing lights, space heaters and associated equipment.

Rev: 20031021

Katolight Power Systems Solutions

Gen-Set Start Up Procedures

Note: Installation should be complete with site load connected. Load should be available when start-up is performed to allow final adjustment and prove entire system.

1. Starting with the Katolight Warranty Validation Sheet

    a. Fill out the top portion completely with the gen-set information.

2. Pre-start checks to be made

    a. Check physical appearance and note any damages or problems. (If severe could cause operation problems, consult the factory before proceeding.)

    b. Check and/or fill lube oil level per engine manufacturer's recommendations (and note). Also, check all hoses and clamps for tightness.

    c. Check and/or fill engine coolant per engine manufacturer's recommendations (and note). Also, check all hoses and clamps for tightness.

    d. Inspect fuel connections and bleed system as required.

    e. Inspect exhaust system for proper and complete installation per Katolight Installation Guide's recommendations. Make sure there are no restrictions. (Consult the factory on any questions.)

    f. Inspect all electrical connections for completion, quality, and safety per installation guide. In the case where items are not met, abort start-up until completed or corrected satisfactorily. (Consult the factory with questions.)

    g. Inspect cooling ducts if applicable. Check for quality installation, completion, and adequate sizing per installation guidelines.

    h. Inspect unit mounts for completion.

        1. Rubber pad type mounts should be installed between unit base and concrete or sub-base tank. The anchor bolts should be double nutted and not tightened to base to allow for slight movement. (See installation guide.) **Note:** Gen-set should never be mounted tightly to concrete due to inconsistencies in the surface that could cause twisting in the drive alignment and result in damage.

        2. Spring type mounts must be installed per Katolight Installation Guide.

    i. Inspect and/or make battery connections with respect to polarity and voltage. Incorrect installation can damage equipment.

j. Inspect transfer switch installation. Be sure the ATS is free from all foreign materials (filings, metal particles and tools, etc.,). Check all connections. Manually transfer before energizing. See installation guide and ATS manual.

3. Now that all the above checks are made and complete, the gen-set can be started in the manual position. (**Note:** do not transfer load at this time.) With gen-set running, check engine gauges and unit meters (oil pressure, water temperature, battery ammeter, AC voltage, and AC frequency) to see that the unit is operating accordingly. Also at this time check phase rotation of both normal and emergency sources and check voltage of both sources for proper match. (Always perform these checks at the ATS if possible.) If phase rotation is reversed, stop gen-set and correct. If voltage is incorrect readjust. When correct, stop gen-set. Put gen-set switch in auto position. (Unit should not start.)

   To Test system, shutting off utility power is recommended but not always possible. In this case follow the ATS test procedures to put the system on line. Make recordings of load test on warranty validation sheet. Include all meter readings. Watch for proper operation, leaks, etc., and make notes of such. When normal power is restored the ATS will timeout, re-transfer to normal, then, in most cases allow for engine cool down before stopping automatically. (Timing functions may vary.)

4. Final mechanical checks and visual inspection

   a. Check for oil leaks, note and/or repair as necessary.

   b. Check for coolant leaks, note and/or repair as necessary.

   c. Check exhaust for tightness and leaks, make necessary repairs.

   d. Check heater(s) and battery charger.

   e. Check belts for proper tension.

5. Safety Switch Checks

   a. Start unit in manual position and perform static test on LOP, HWT, by switching terminal to ground until shutdown occurs. May take up to 20 seconds on LOP.

   b. Now restart unit again to test overspeed safety. Run engine speed slowly until shutdown occurs. Use speed adjust pot on electronic governors. **Note:** Do not pull throttle open fast. This could cause damage to unit. Speed must be raised slowly.

   c. Overcrank test: With unit in the off position, disconnect start solenoid wire #3 on KASSEC engine controls. Then put switch in manual position. This will initiate start. After the programmed time, the overcrank light will come on. Times are as follows: One shot time – 45 seconds; Cycle crank time – 10 seconds crank, 10 seconds rest, total of 5 cycles. Reconnect wire and start unit to be sure unit is again fully operational. Stop unit. Put unit switch in automatic. System is ready to go.

6. Special Testing – Load Bank Run (If required)

   a. After pre-start checks are completed, (Sections 1 and 2a through 2j), load bank(s) can be connected, preferably at the mainline breaker on gen-set. Be sure to check specs for length of load run and type of test required by customer.

KATOLIGHT® CORPORATION

START-UP REQUEST FORM

To provide an authorized factory start-up at the lowest possible prices, we must request that the following checklist and tasks be completed prior to a Katolight representative's arrival at the installation site to perform the start-up.

(Please Print)
Unit Serial Number: _____ Contact Name: _____

Company Name: _____ Title: _____

Please attach a map or directions to the site. **Phone Number: _____**

- ☐ Unit set in place on vibration pads with floor anchor/studs to prevent movement.
- ☐ Radiator ducted to properly sized air discharge louvers.
- ☐ Unit full of oil and water/anti-freeze mix.
- ☐ Battery filled with acid and fully charged.
- ☐ Battery charger mounted with AC and DC wired, if not supplied mounted by the factory.
- ☐ All AC and DC electrical connections made.
- ☐ Engine heater wired to normal AC power supply.
- ☐ Fuel inlet and return lines run between the unit and fuel storage system, system filled and primed to the engine with proper fuel.
- ☐ Exhaust system in place and supported so that the exhaust manifold does not carry weight of exhaust system.
- ☐ Air inlet louver motor wired to an emergency generator source point to open upon the start of an engine generator set.
- ☐ Generator room cleaned of construction debris including excess nails, bolts, nuts, panel knockouts, etc. It is very important that the radiator fan area is checked for debris, as damage to the equipment and personal injury can occur if loose items come in contact with the fan when the unit is initially started.

Consult your Katolight Installation Guide on any questions.

If, upon arrival at the installation site, our representative cannot perform the start-up as a result of defective Katolight equipment, the problems will be resolved and we will reschedule another start-up date at the earliest possible date at no additional charge.

If the start-up cannot be performed due to an incomplete installation or for reasons beyond Katolight's control, you may incur an additional start-up charge at a later date.

Signature: _____ Date: _____

100 Power Drive, PO 3229, Mankato, MN 56001
507.625.7973

KATOLIGHT START-UP VALIDATION and INSPECTION FORM

(Inspections are to be performed only by factory trained personnel)

Distributor Name: _____ Owner Name: _____

Street: _____ Street: _____

City, State, Zip Code: _____ City, State, Zip Code: _____

Telephone Number: _____ Telephone Number: _____

Signature: _____

Purchase Date: _____ Start-Up Date: _____ Technician Name: _____

Generator Data Plate Information:

Order #: _____ Model #: _____ Serial #: _____

Engine Make: _____ Model #: _____ Serial #: _____

Fuel: _____ Generator: _____ Cooling: _____

kW: KVA: P.F: Phase: Wire:

Volts: Freq: RPM:

Utility Service:	Generator Service:
Phase: _____ Phase Rotation: _____	Phase: _____ Phase Rotation: _____
Volts: _____ Amps: _____	Volts: _____ Amps: _____

ATS Serial #: _____ Model #: _____

Pre-Start Checks:

- ☐ Freight Damage (components tight, straight, etc.)
- ☐ Proper Belt Alignment and Tension
- ☐ Governor Rod Movement, Clearance & Final Adjustment
- ☐ Fluid Levels (Oil, Coolant, Battery, etc.)
- ☐ Correct Fuel and Exhaust Plumbing
- ☐ Adequate Air Flow
- ☐ Correct AC Wire Size and Connections
- ☐ Correct DC Wire Size and Connections
- ☐ Proper Size Battery(ies)
- ☐ Block Heater AC Voltage and Operation
- ☐ Battery Charger Voltage and Operation
- ☐ Check all Electrical & Control Connections on Unit & Associated Equipment.

Running Checks:

- ☐ Check DC Alternator output Amps _____ Volts _____
- ☐ Adjust Frequency (if needed)
- ☐ Check No Load AC Voltage. Adjust if needed.
- ☐ Check Shutdowns Lop, Hwt, Overspeed, Overcrank & LWL
- ☐ In Phase Monitor: ☐ On ☐ Off
- ☐ Check for Fluid Leaks _____
- ☐ Transfer Load: Yes _____ No_____ (Record meter readings below)
- ☐ Transfer Switch Delay Setting TDES TNE TDN TDEC
- ☐ Exercise Clock Set: ☐ Yes ☐ No ☐ NL ☐ L
- ☐ Check all Hose Connections & Clamps.

Time	Gen. Amps	Gen. Volts	Freq.	KW	KVA	P.F.	Amb. Temp.	Oil Press.	Batt. Charg. Gen.	Water Temp.	Oil Temp.	RTM	

Notes: _____

☐ Instruct customer on functions and operation of total EPSS (Emergency Power Supply System)

I _____ received training on _____.

Please print name of person receiving training and have him sign his name — Date

White Copy – Katolight Yellow Copy – Distributor Pink Copy – Owner WV-472 Rev. 20030804



Installation Manual

Dependable Power Solutions . . . It's All We Do!

100 Power Drive Mankato, MN 56001
Phone 507.625.7973 Fax 507.625.2968 Toll Free 800.325.5450 www.katolight.com
Install_Manual_KL_11-04

CALIFORNIA PROPOSITION 65

WARNING

ENGINE EXHAUST FROM THIS PRODUCT CONTAINS CHEMICALS KNOWN TO THE STATE OF CALIFORNIA TO CAUSE CANCER, BIRTH DEFECTS, AND OTHER REPRODUCTIVE HARM.

Contents

Contents 3
Product Identification Information 4
Forward 5
Figures and Tables 6
Safety Precautions 7
General 13
Lifting Provisions 14
Location 15
Mounting 17
Air Requirements 19
Exhaust System 23
Fuel System 27
Electrical Requirements 37
Service 43
Installation Checklist 44
Start-Up Request Form 45

Product Identification Information

Locate and record numbers in the spaces below immediately after unpacking your generator set. This ensures that the numbers are readily available for future reference.

Model Designation: _____

Serial Number: _____

How to Read Katolight Model Numbers

Katolight's model numbering format is composed of six sections:

1. Prefix
2. First number group
3. First letter
4. Second letter
5. Third letter
6. Last number



Forward

This Installation Guide provides general instructions for installing your Katolight generator set properly. It is essential that every person who works on or with the generator set be completely familiar with the contents of this manual, and that he/she carefully follows the instructions contained herein.

Each installation may require some modification of the suggested guidelines in this manual. Installations must be consistent with locally applicable standards and take into consideration safety guidelines and measures.

Following this guide will result in an efficient and reliable installation. Carefully follow all procedures and safety precautions to ensure proper equipment operation and to avoid bodily injury. Read and follow the Safety Precautions section at the beginning of this manual.

IMPORTANT

Information in this publication represents data available at the time of print. Katolight reserves the right to change this publication and the products represented without notice and without any obligation or liability whatsoever.

All instructions and diagrams have been checked for accuracy and simplicity of application. However, the skills of the installer are most important. Katolight does not guarantee the result of any installation contained in this manual. Nor can Katolight assume responsibility for any injury or damage to property. Persons engaging in installation do so entirely at their own risk.

Figures and Tables

The following is a list of all figures and tables contained in this manual.

Figure 1-1……Typical generator set installation
Figure 2-1……Lifting provisions
Figure 4-1……Typical pad type vibration
Figure 4-2……Spring mount vibration isolator
Figure 4-3……Recommended anchor bolt
Figure 5-1……Typical center top pivoted louver
Figure 5-2……Typical installation with louvers
Figure 5-3……Typical remote radiator installation
Figure 6-1……Typical side inlet exhaust
Figure 6-2……....Typical end inlet exhaust
Figure 6-3……Wall thimble installation
Figure 7-1……Fuel day tank
Figure 7-2A……..Gaseous fuel pipe schematic
Figure 7-2B……..Gaseous fuel pipe schematic with zero pressure regulator
Figure 8-1…….Suggested motorized louver wiring
Figure 8-2…….Optional motorized louver wiring

Table 6-1…….Equivalent lengths of pipe fittings
Table 7.1…….Gaseous fuel pipe capacity

Safety Precautions

IMPORTANT SAFETY INSTRUCTIONS

Electromechanical equipment, including generator sets, transfer switches, switchgear, and accessories, can cause bodily harm and pose life-threatening danger when improperly installed, operated, or maintained.

Dangers, Warnings and Cautions are used in this manual to alert the operator to special instructions concerning a particular procedure that may be hazardous if performed incorrectly. These safety alerts alone can not eliminate the hazards that they signal. Strict compliance to these special instructions and common sense operation are major accident prevention measures. Observe all warnings found on the equipment. Ensure that warning labels are legible and not obstructed by dirt, grease or other equipment. Katolight Corporation can not anticipate every possible circumstance that might involve a hazard. The warnings in this manual and on tags and decals affixed to equipment are, therefore, not all inclusive.



DANGER

Danger indicates the presence of a hazard that will cause severe personal injury, death, or substantial property damage.



WARNING

Warning indicates the presence of a hazard that can cause severe personal injury, death, or substantial property damage.



CAUTION

Caution indicates the presence of a hazard that will or can cause minor personal injury or property damage.



This symbol signifies high voltage.

The following safety rules should be strictly complied with:

ACCIDENTAL STARTING

Be aware that the generator set could start at any time in the "AUTO" mode. Keep clear of all moving parts and be sure to turn switch to the "OFF" position before servicing and disconnect the negative battery cable after disconnecting the battery charger circuit.

BATTERY

For proper unit operation, battery minus (-) terminal must always be connected to ground. Reverse connection of the battery will severely damage or destroy the battery charging alternator, regulator and other polarity sensitive devices.

Wear protective safety eyeglasses and gloves when handling starting batteries and electrolyte. Battery acid can cause serious burns if it contacts eyes or skin.

Servicing of batteries is to be performed or supervised by personnel knowledgeable of batteries and the required precautions. Keep unauthorized personnel away from batteries.

Do not smoke or use an open flame when servicing batteries. Batteries generate an explosive gas during charging.

The replacement starting battery or batteries must be of equal size and cold cranking amps.

The generator controls must be in the off position when replacing the batteries.

Do not dispose of battery or batteries in a fire. The battery is capable of exploding.

Do not open or mutilate the battery. Released electrolyte has been known to be harmful to the skin and eyes and to be toxic.

A battery presents a risk of electrical shock and high short circuit current. The following precautions are to be observed when working on batteries:

1. Remove watches, rings, or other metal objects
2. Use tools with insulated handles

VENTED BATTERIES

The installation of the engine generator shall provide enough ventilation to ensure that gases generated by vented batteries during charging or caused by equipment malfunction are removed.

The electrolyte is a dilute sulfuric acid that is harmful to the skin and eyes. It is electrically conductive and corrosive. The following procedures are to be observed:

1. Wear full eye protection and protective clothing
2. Where electrolyte contacts the skin, wash it off immediately with water

3. Where electrolyte contacts the eyes, flush thoroughly and immediately with water
4. Spilled electrolyte is to be washed down with an acid-neutralizing agent. A common practice is to use a solution of one pound (500 grams) bicarbonate of soda solution to be added until the evidence of reaction (foaming) has ceased. The resulting liquid is to be flushed with water and the area dried.

Lead acid batteries present a risk of fire because they generate hydrogen gas. The following procedures are to be followed:

1. DO NOT SMOKE when near batteries
2. DO NOT cause flame or spark in battery area
3. Discharge static electricity from body before touching batteries by first touching a grounded metal surface

FIRE HAZARD

Keep fire extinguishers in accessible locations. Use appropriate fire extinguishers as recommended by NFPA.

Remove all unnecessary grease and oil from the unit. Accumulated grease and oil can cause overheating and engine damage, which present a potential fire hazard.

When an open bottom base is used, the stationary engine generator assembly is to be installed over noncombustible materials. It should be located such that it prevents combustible materials or loose debris from accumulating under or inside the generator set.

Do not service the engine when any ignition source such as an open flame is present. “DANGER” signs must be placed to warn of the fire hazard. No work may be performed on the engine involving an ignition source such as open flames, cutting, welding, or grinding.

A fire extinguisher (dry chemical or carbon dioxide, CO2) must be immediately available to the mechanics while working. When liquefied or natural gas leaks or escapes, it can result in dangerous accumulations of gas, which might cause a serious flash or explosion. Careful ventilation of the area is mandatory in the event of a fuel leak.

EXHAUST SYSTEM

Engine exhaust gases contain DEADLY carbon monoxide gas, which is colorless and odorless. If breathed in sufficient concentrations, this gas can cause severe nausea, fainting, or death. Provide adequate ventilation to prevent buildup of exhaust gases. When the generator is installed inside a room or enclosure, exhaust gases must be piped outdoors. Install the exhaust system so exhaust gas does not leak at joints or piping connections. Make certain that the extended exhaust piping is plumbed properly and that the exhaust is not near an intake ventilator.

Increase the exhaust pipe diameter as necessary to reduce back pressure. Use a minimum number of fittings and elbows to prevent back pressure in the engine exhaust system. Be sure the enclosure has proper ventilation to accommodate the engine cooling system.

FUEL SYSTEM

Gaseous, Natural Gas and Liquid Propane Gas are extremely flammable and vapors are EXPLOSIVE. Comply with all laws regulating the storage and handling of these fuels. Check for leaks frequently and correct such leakage immediately.

Do not fill fuel tanks while the engine is running.

Do not smoke or use open flame at any time when fuel is being handled. Fuel vapors are both toxic and flammable.

Liquid petroleum gas (LPG) systems operate at tank pressures around 100 psi or above. The tank pressures are regulated down. Vaporized LPG systems operate at pressures near 6 oz., as do most natural gas systems.

Safety precautions when handling liquefied petroleum gas cannot be over-emphasized. There are state, county and city codes, and fire regulations covering the handling and storage of liquefied petroleum gas or natural gas. In addition to the safety suggestions in this manual, all local codes and fire regulations on this subject must be followed explicitly. Where local codes are more stringent than the suggestions in this manual, the local codes must be given priority.

Before proceeding with any service, be certain that all switches are in the OFF position, disconnect battery ground cable, remove fuses in DC systems and turn off the battery charger. These safety suggestions apply to service of any engine using liquefied petroleum gas or natural gas fuel regardless of the work to be performed. When servicing the engine, ensure that there is adequate ventilation. This is to avoid the accumulation of gas/air mixtures in and about the engine caused by undetected leaks.

Any service performed on the fuel system requires that:

- All threaded connections are sealed with proper pipe thread compound. Replace defective fittings and reseal all connections.
- Fuel system is checked for leaks. Leaks are not permissible. Odorants, which are strong smelling components (an odor similar to spoiled cabbage), are added to liquefied petroleum gas as a warning agent to indicate the leakage of even small quantities of gas.

- A soap solution applied with a soft brush will bubble to indicate leaks. Never use an open flame to check for leaks. All leaks must be sealed.
- All flexible fuel connections are checked, metallic and neoprene, with the soap solution.

It is important to remember that all gas fuel systems are pressurized. Be certain that the fuel valves are tightly closed and all fuel has been vented before starting any repair work on the fuel system.

HAZARDOUS NOISE

Prolonged unprotected exposure to hazardous noise levels may cause loss of hearing. Never operate the generator set without a muffler or with a faulty exhaust system. Ear protection may be required.

HAZARDOUS VOLTAGE/ELECTRICAL SHOCK

Dangerous voltages are present at power terminals of this equipment. Contact with such terminals will result in extremely dangerous and possibly lethal electric shock. Never allow any unqualified person to install, operate or service the equipment. The standby electric system must be installed, tested, and inspected per the manufacturer's recommendations. All codes, standards, regulations, and laws pertaining to the installation must be strictly complied with.

Accidental contact with electrical equipment can cause severe injury and death if the equipment is not properly grounded. The frame and external electrically conductive parts of this equipment must be properly connected to an approved earth ground, in accordance with applicable electrical codes. A grounding lug is provided on the generator and in other equipment for this purpose.

CAUTION: RISK OF ELECTRIC SHOCK!

The grounded conductor must be bonded to ground in accordance with the National Electrical Code, NFPA 70. The unit shall not be used in floating output applications.

Remove all electrical power before removing protective shields for service or maintenance. Exercise extreme caution when working on or around electrical components. Open or poorly insulated conductors are extremely dangerous during operation. Severe, possibly fatal, shock may result. Make certain that all conductors are properly insulated or guarded, all grounds are made and that the area is dry. Do not tamper with interlocks.

In the event of an accident from electrical shock, shut down the generator set immediately. If the set cannot be shut down, free the victim from contact with a dry nonconductor, avoiding direct contact with victim until free of the

conductor. If the victim is unconscious, apply artificial respiration if qualified and get medical help immediately.

Verify that all power leads and control connections are properly insulated before starting the generator set. Neglecting this may result in extensive damage to equipment and personal injury. This problem arises if the unit is started before electrical installation is completed.

Make certain the area is well ventilated to dissipate any flammable vapors, which may collect from fuels. When servicing any part of the electrical system or making any connections, be sure the main switch is OFF and disconnect battery ground cable or remove fuse in DC system. Turn off the battery charger. Clean or service the generator set only when the engine is shut down. If the unit stops because of an engine safety device, do not attempt to restart until the cause for shutdown has been corrected.

HOT PARTS

The exhaust manifold, turbocharger(s), and extended exhaust piping are HOT when the engine is running. These can remain hot for long periods of time after the engine shuts off. Avoid contact with these parts. Consider insulating the exhaust system if installation is such that unintentional contact with the exhaust system components is likely.

Coolants under pressure have a higher boiling point than water. DO NOT open a radiator or heat exchanger pressure cap while the engine is running. Allow the generator set to cool and bleed the system pressure first.

MOVING PARTS

Moving parts can cause severe personal injury or death. Do not wear loose clothing or jewelry in the vicinity of moving parts, or while working on electrical equipment. Loose clothing and jewelry can become caught in moving parts. Jewelry can short out electrical contacts and cause shock or burning.

HANDLING

Do not use lifting devices with marginal capacities when lifting or moving the unit. Observe the center of gravity of the equipment to be lifted and do not allow the generator set to swing if suspended. Make certain the supporting structure is adequate to support the unit. Failure to observe this warning may result in equipment damage and serious or fatal injury.

1 General

When installed properly and according to applicable codes, your Katolight generator set will perform safely and reliably. Incorrect installation can cause continuing problems. Figure 1-1 illustrates a typical installation. Your authorized generator set distributor/dealer can provide advice about or assistance with your installation.

This manual references organizations and their codes that govern generator set selection and installation for US installations. Installers must comply with national and local codes when applicable.

NFPA 37……..Stationary Engines and Gas Turbines
NFPA 54……..National Fuel Gas Code
NFPA 70……..National Electric Code®
NFPA 99……..Standard for Health Care Facilities
NFPA 101……Life Safety Code
NFPA 110……Emergency Standby Power Systems
UL-2200……...Stationary Engine Generator Assemblies

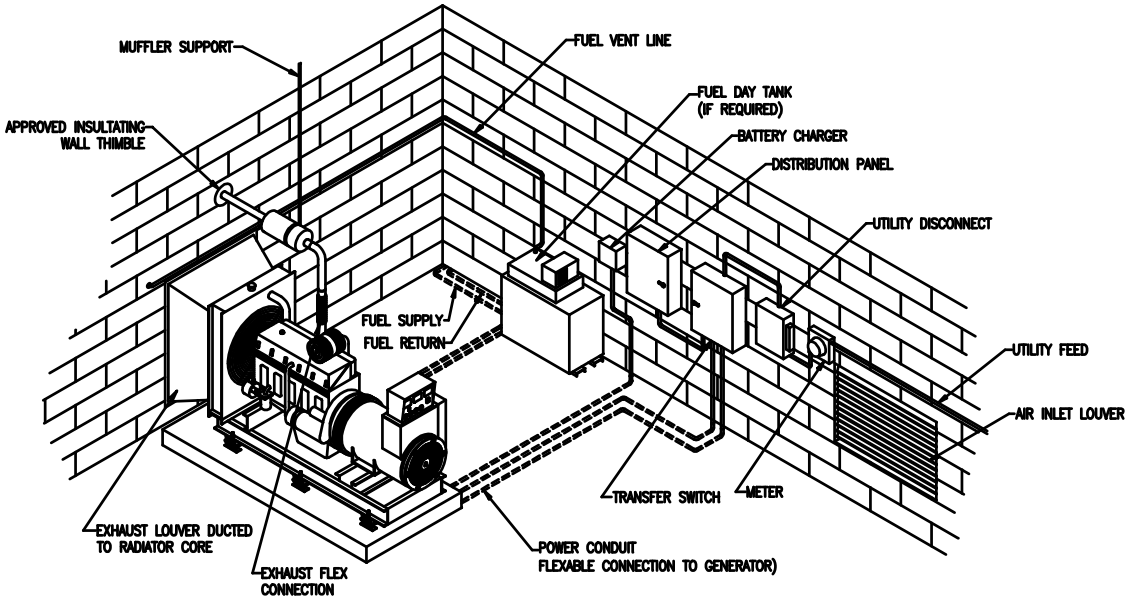

Figure 1-1: Typical generator set installation

2 Lifting Provisions

To ensure personal safety and prevent damage to the product, we strongly recommend the guidelines in Figure 2-1 be observed when lifting Katolight generator sets. Due to the different designs, dimensions and weights of the generator sets, specific instructions for each model are not provided. It is the responsibility of the dealer/distributor to see that generator set lifting is performed within the framework of these guidelines.

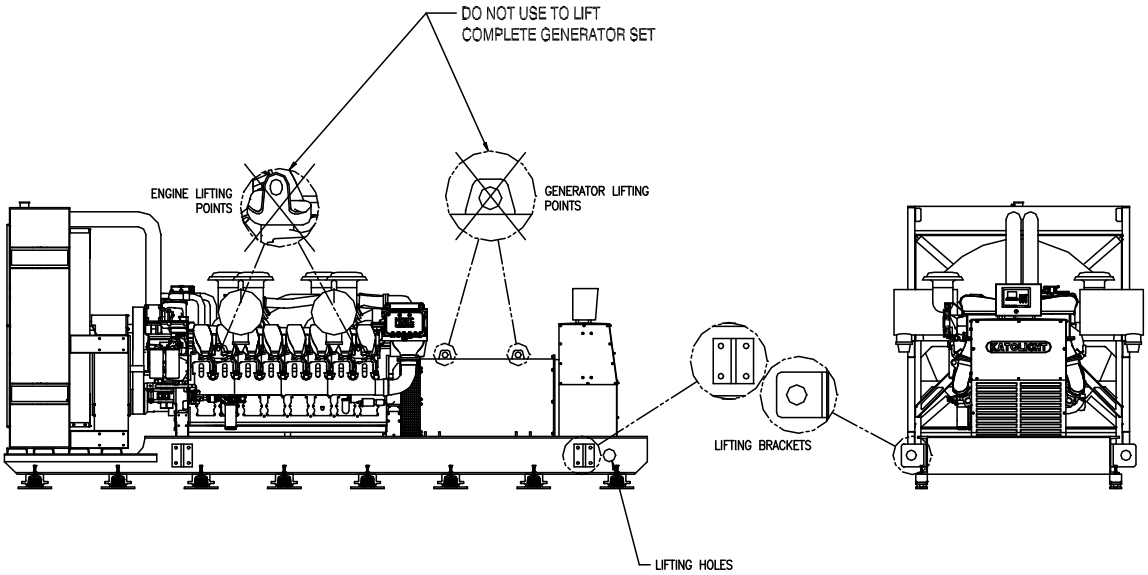

Figure 2-1: Lifting provisions

3 Location

The location of the generator set is influenced by factors such as ventilation, exhaust piping, electrical service, fuel supply and accessibility for maintenance and service.

Before selecting the location for your generator set, consider the following:

- Supporting structure must be adequate for the generator set and accessories. For information on mounting on an inertia pad, see Section 4. For any other set-up, consult a structural engineer for an appropriate design.
- Area should be clean, dry and not subject to flooding
- Ventilation should be available in the area with a minimum amount of duct work
- Exhaust gas must be piped away from the structure and any ventilation intakes. Piping must incorporate large radius, low restriction elbows.
- An adequate supply of fuel should be available at all times to sustain operation
- The main diesel fuel supply should be as close as possible to the unit. If the main fuel tank is installed underground, an auxiliary pump and day tank are necessary to transfer fuel from the main tank to the day tank.
- Vibration should be effectively isolated and dampened to reduce transmission of vibration and prevent fatigue fractures of connected systems.
- Area should provide easy access for maintenance and repair. A minimum clearance of three feet between an installed generator set and adjacent walls or other electrical equipment should be maintained on three sides of the generator set. Clearance of five feet should be maintained at the rear of the generator set to facilitate removal, should it become necessary.
- Applicable fire rating codes and standards must be met
- When an open bottom base is used, the stationary engine generator assembly is to be installed over noncombustible materials. It should be located such that it prevents combustible materials or loose debris from accumulating under or inside the generator set.

Local weather conditions will have a direct influence on location of the unit and the type of accessory equipment required to assure reliable operation. Extreme ambient temperature variations should be avoided. For ambient temperatures below 60 degrees, starting aids such as jacket water heaters and lubricating oil heaters will ensure dependable starting. Anti-condensation or

strip heaters are available for control panels and generators to maintain a temperature above the dew point to prevent condensation of moisture.

Standard Katolight transfer switches located indoors in heated facilities are enclosed in NEMA 1 enclosures. Various other NEMA enclosures may be needed. If the generator set is located outside, heaters are needed below 32 degrees Fahrenheit.

Consider preventive maintenance issues when selecting a generator set location. See Section 9 for a list of service points that should be accessible.

4 Mounting

Your Katolight generator set should be installed in a location that is able to support the weight of the unit and accessories, resist dynamic loading, and does not transmit generator noise and vibration. See Section 3 for detailed information on selecting a location for your generator set.

WEIGHT

The weight of the generator set and accessories will determine the type and design of the support structure. Generator set weight can be found in the specification sheet for your particular model. Be sure that the weight of accessory items and fuel (if a sub-base tank is used) are added to the total requirements.

INERTIA PAD/BASE

Your generator set must be mounted on a substantial inertia pad or base. The composition of the inertia pad should follow standard practice for the required loading. Common specifications call for 2500 psi concrete reinforced with eight-gage wire mesh or number 6 reinforcing bars on 12-inch (30-cm) centers.

To determine the depth of the inertia pad, the following formula can be used:

BASE DEPTH =	Wu / d * w * l

Where Wu = engine-generator set weight in pounds
d = concrete density (usually 145 lbs per cubic foot)
w = foundation width in feet
l = foundation length in feet

The inertia pad should be a minimum of twelve inches wider and twelve inches longer than the unit base. The inertia pad may be constructed higher than the floor level by three to eight inches for ease of maintenance.

To reduce the amount of unit vibration transmitted, you must isolate your inertia pad from the foundation. One method for isolating the inertia pad from the foundation is to use eight to ten inches of wet gravel or sand as a bed in the inertia pad pit. For other methods, consult a qualified structural engineer.

To allow settlement of the inertia pad from the foundation, expansion joints should be incorporated between the inertia pad and the foundation.

VIBRATION ISOLATION

Vibration is a normal by-product of the operation of any generator set. Vibration transmitted to surrounding areas will increase the noise level and if severe, can cause structural damage. To minimize this risk, all generator sets should have vibration isolation between the generator base and inertia pad.

All fuel, coolant, exhaust and electrical connections must have flexible sections to isolate vibration. Leaks or fractures can develop rapidly without vibration isolation and there is a danger of eventual total failure.

For generator sets enclosed within a building, where maximum vibration isolation is required, spring mounts provide vibration isolation between the generator base and the structure. Check state and local codes for such requirements.

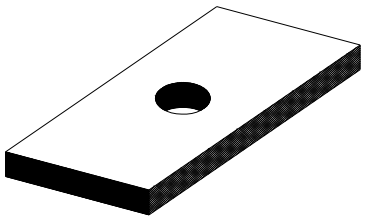

Figure 4-1: Typical pad type vibration

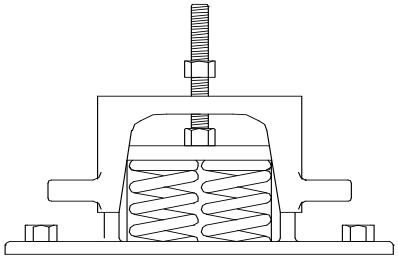

Figure 4-2: Spring mount vibration isolator

Anchor bolts should be loosened and double nutted after installation to avoid base distortion caused by unlevel inertia pads.

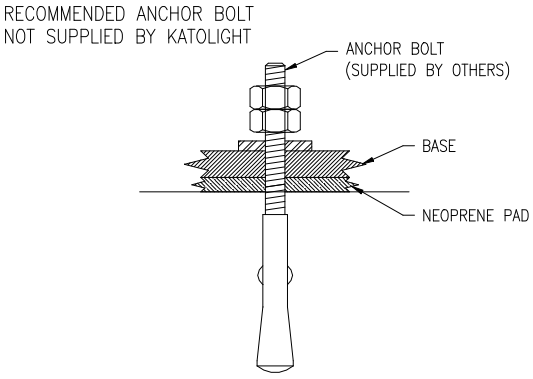

Figure 4-3: Recommended anchor bolt

5 Air Requirements

GENERAL

When installing engine generator sets, great care must be taken to insure adequate ventilation. Proper installations require enough ventilation to cool the engine generator set as well as supply adequate air for combustion.

When installing the ventilation system, the following factors should be considered:

- Location of intake and exhaust louvers
- Method of actuation of intake and exhaust louvers
- Ambient temperature
- Routing of exhaust air duct

The air intake and exhaust should be in line to provide engine room ventilation air flow which will parallel the generator set air flow over the engine, through the radiator and/or exhaust louver. The inlet and outlet openings must be large enough to provide the volume of air required by the engine generator.

NOTE

Exhaust louver effective opening should be at least 25% to 50% larger than engine radiator core. Intake louver should be 50% to 100% larger in effective opening than engine radiator core.

In most applications, intake and exhaust louvers should be used. Figure 5-1 indicates a typical louver.

Care should be taken to provide adequate open space outside the exhaust louver so as not to obstruct airflow.

Units with mounted radiators should be installed with ducting between the radiator and the exhaust louver to prevent recalculation of air.

CAUTION

Ensure that the exhaust ducting is installed so that no recirculation of radiator exhaust air occurs. Failure to prevent re-circulation could cause the unit to overheat and shut down.

The exhaust louver should not be exposed to high prevailing winds, since wind pressure may reduce fan discharge and reduce cooling. The duct should be constructed with as few bends as possible. All units can be

supplied with radiator duct flanges of the required size to meet the customer's application.

If bends are required, they should be in the form of gradual sweeps to allow airflow with minimum restriction. Increase duct size one-fourth to one-half to compensate for bends.

Motorized and gravity louvers may be used to prevent entry of cold air which may cause difficulty in engine starting. (Refer to Chapter 8 for recommendations for wiring motorized louvers). Louvers also reduce the entry of rain, snow and insects into the building.

A gravity-operated louver can be used for the exhaust air. When the set operates, outlet airflow will open the louver and it will close automatically by gravity when the unit is shut down.

Generating sets with automatic start require the use of motor operated intake louvers. Motor operated louvers are held closed by spring tension and are driven to the open position by a motor operating through a mechanical linkage.

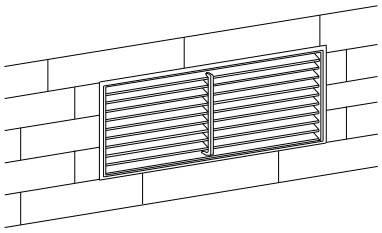

Figure 5-1: Typical center top pivoted louver

CAUTION

Care should be taken in wiring the system to ensure that the intake louver motor is supplied with power during all possible modes of unit operation, i.e. true power failure, simulated power failure due to incorporation of a system test switch, or automatic plant exercising. Incorrectly wired louver motors could result in the louvers closing prematurely during engine cool-down, resulting in overheating, engine shutdown, and possible damage to the unit.

In some extreme cold weather applications, the opening of intake louvers immediately upon starting may cause carburetor icing and vaporizing problems with engines utilizing gaseous fuels. Diesel engines may also be affected if lightly loaded. Thermostatically controlled louvers may be used to reduce the difficulties encountered with cold weather applications.

Figure 5-2 illustrates a typical generator set installation for units with unit-mounted radiators, indicating ducting and preferred locations of the louvers.

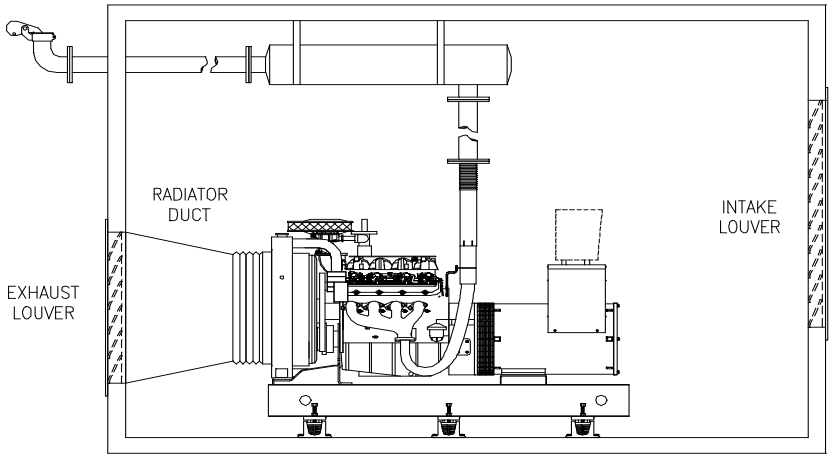

Figure 5-2: Typical installation with louvers

Engine-generator sets with remote cooling will not have an engine driven fan to move air through the generator room. As a result, a fan or some other means of moving air through the room must be considered. The fan must move the required amount of air against the allowable static friction.

The following formula may be used to estimate the amount of airflow required to remove engine and generator radiated heat and supply sufficient combustion air. The formula is based on air temperature of 100°F. Allowable room air temperature rise is 20° to 30° F.

$$V = \frac{Q}{0.018 * \Delta T}$$

Where V = Air flow through the engine-generator room (CFM)
Q = Engine-generator set radiated heat (BTU/min)
ΔT= Allowable room air temperature

Higher elevation installations will require increased airflow. Add 10% for each increase of 2500 feet. Also increase airflow for non-insulated exhaust silencer and other equipment that may add to the radiated heat in the room. Also keep in mind the required combustion airflow for the engine.

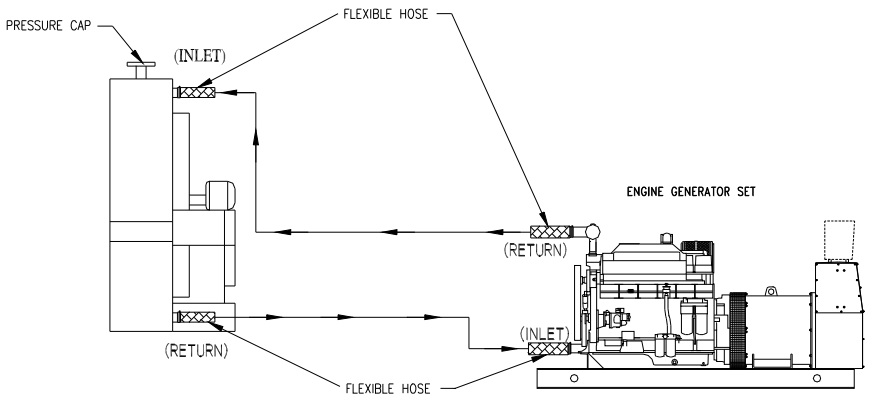

Figure 5-3: Typical remote radiator installation

6 Exhaust System

Proper exhaust system installation is essential for maximum generator set engine efficiency. Because exhaust fumes are deadly, great care must be taken when installing the exhaust system. Consideration must be given to back pressure, piping, and placement. Figures 6-1 and 6-2 show the general arrangement of recommended exhaust systems.

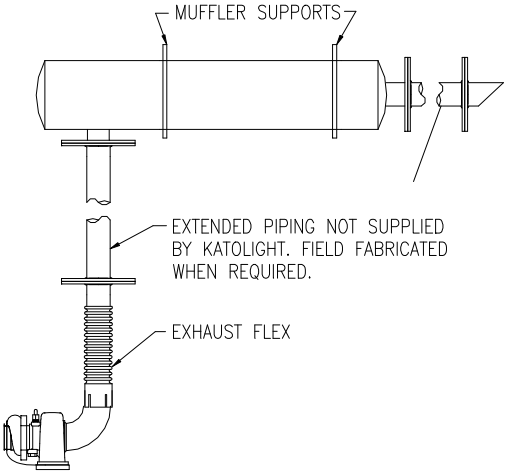

Figure 6-1: Typical side inlet exhaust

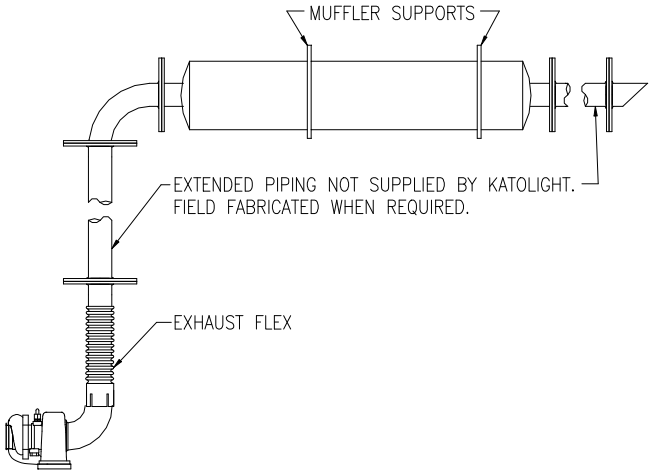

Figure 6-2: Typical end inlet exhaust

PLACEMENT

The exhaust pipe should terminate outdoors, away from doors, windows, or other building openings in an area where exhaust can dissipate. Placement of piping and exhaust silencer should take into account the location of combustible materials. If location cannot avoid these concerns, remove combustible materials on a regular basis. Keep dry grass, foliage, and combustible landscaping material a safe distance from the exhaust system.

WARNING

Inhalation of exhaust gases can cause death. Exhaust pipes must not terminate near fresh inlet vents of any type or near combustible materials. Avoid exhaust gas recirculation which could cause the engine-generator set to overheat. Generator sets installed outdoors inside enclosures should have their exhaust directed so that it will disperse away from buildings and building air intakes.

BACK PRESSURE

The installed exhaust system must not exceed the engine manufacturer's maximum exhaust back pressure limit. Damage may result from excessive back pressure. Causes may include:

- Insufficient exhaust pipe diameter
- Exhaust run too long
- Exhaust silencer too small or designed improperly
- Too many bends and/or constrictions in piping
- Obstruction in exhaust piping

Your Katolight generator set has been sized so that exhaust system back pressure is kept within the acceptable limits. However, in situations when extended piping or a flex connector other than the one supplied by Katolight must be used, contact Katolight to ensure that back pressure will not exceed the engine manufacturer's specification.

PIPING

Exhaust piping should conform to all applicable codes. Routing of exhaust piping should be as short and direct as possible. Exhaust piping should be of Schedule 40 black iron or steel having adequate strength and durability. The recommended material for exhaust piping is Schedule 40 black iron pipe. Where possible, sweep elbows with a radius of at least three times the pipe diameter should be used.

Exhaust pipes should be free standing, not supported by the engine or muffler. Where exhaust pipes attach to the engine, they must be connected with flexible connectors to minimize vibrations that can cause damage to the exhaust system.

CAUTION

Weight applied and vibration extended to the exhaust manifold or turbocharger could result in damage to these components. No exhaust piping weight may be carried by the engine, exhaust manifold or turbocharger.

FLEXIBLE SECTION

The Katolight supplied exhaust flex should be installed directly off the engine turbo elbow/manifold. This limits the stress on the engine exhaust manifold or turbocharger resulting from engine motion on its vibration mounts and temperature-induced changes in pipe dimensions. The flexible section should not be bent or used to make up for misalignment between the engine exhaust and the exhaust piping. Since typical exhaust temperatures range from 800~F (427~C) to over 1200~F (649~C) for some engines, seamless stainless steel should be used for the flexible section.

CAUTION

When installing a silencer, make certain flow direction is correct. Check inlet and outlet marking on the silencer nameplate.

EXTENDED PIPING

Engine exhaust piping can accumulate a considerable amount of condensed moisture after unit shutdown, particularly if the exhaust system is run through lengthy piping. To prevent condensed moisture from running back into the engine, exhaust piping should be sloped away from the engine and a condensate trap and drain should be incorporated at a low point ahead of engine manifolds. The trap should be drained periodically.

Horizontal extended exhaust pipe should terminate with a 45° tail pipe to prohibit rain from entering the system. A screen should be placed across the end of the tail pipe to keep birds and rodents from entering the system. Where vertical exhaust stack is necessary, a rain cap should be fitted to exclude rain and snow from the exhaust pipe.

Where there is a danger of extending piping coming in contact with combustible material or personnel, the piping should be insulated or shielded.

PIPING INSULATION

The heat rejected by exhaust piping and the amount of ventilating air required can be substantially reduced by insulating exhaust piping with suitable high-temperature insulation. Exhaust temperatures are given on each generator model's specification sheet. DO NOT insulate piping for the turbocharger or manifold.

WALL THIMBLE

Exhaust piping passing through combustible walls or partitions must be guarded at the point of passage by a metal ventilated thimble to prevent exhaust pipe heat from being transmitted to the combustible material (Figure 6-3). Thimbles must be suitable for the application. Consider the type of exhaust system, construction materials used and local fire codes.

Wall thimbles are usually fabricated at a local sheet metal shop to the specifications furnished by the installation engineer. The thimbles should be constructed so that they extend at least three inches both ways from the surface of the wall or roof. Holes are provided at both ends to allow cooling air to circulate through the thimble. If screening is used on the outer end to keep birds, rodents, etc., from entering the thimble, make sure that the mesh is large enough so that it doesn't impair air circulation through the thimble. If the exhaust pipe must exit through a roof, a rain shield must be included above the thimble. The rain cap as shown on the end of the exhaust pipe is recommended only in areas not subject to freezing temperatures. In an area where freezing is common, extend the exhaust piping well beyond the roof

and use a gradual "U" bend at the end to direct the exhaust outlet downward which will keep rain, snow, etc., out of the pipe. The outlet of the pipe should be far enough from the roof to prevent ignition of the roof material from hot exhaust.

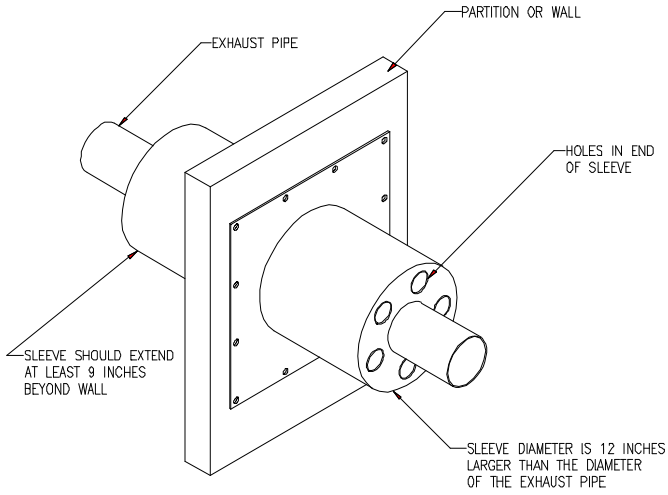

Figure 6-3: Wall thimble installation

TYPE OF FITTINGS (In Inches)	1-1/2	2	2-1/2	3	3-1/2	4	5	6	8	10	12
Standard Elbow (In Feet)	4.4	5.3	6.4	8.1	9.6	11	14	16	21	26	32
Long Rad. Elbow (In Feet)	2.8	3.5	4.2	5.2	6	7	9	11	14	17	20
Med. Rad. Elbow (In Feet)	3.6	4.6	5.4	6.8	8	9	12	14	18	22	26
Standard Tee (In Feet)	9.3	13	14	17	19	22	27	18	44	56	67

Table 6-1: Equivalent lengths of pipe fittings

7 Fuel System

GENERAL

The fuel system must be installed properly to assure availability of fuel for starting and continuous running throughout the emergency. Before connecting the fuel lines to the engine, ensure that fuel connections are free from dirt, grease, water and other contaminants that could damage the engine.

The components comprising a fuel system will differ according to the generator set location, type of fuel and anticipated time of operation desired.

DIESEL APPLICATIONS

The following basic components comprise a representative diesel fuel system:

1. Main Fuel Tank Incorporating:
   a. Fill Line
   b. Vent Line
   c. Supply Line with Foot Valve
   d. Return Line

2. Day Tank (if required)
   a. Pump Control Switch

3. Electric Fuel Transfer Pump (if necessary)

MAIN FUEL TANK

The best location for the main fuel tank is as close to the engine as possible. If building codes and insurance regulations permit, the tank could be located in the same room as the generator set, or in an adjoining room. If this is not possible, the tank should be located outside or underground.

The fuel level in the main tank should be level with the engine's fuel transfer pump inlet. If located in the room, the tank should be on the same general level as the engine's fuel injection pump but lower than the injectors. When the tank must be placed higher or lower than this, it often requires the usage of priming or float tanks. When the main tank can be located close to the set and where the vertical lift is five feet or less, the fuel injection pump may be capable of supplying sufficient fuel. If the horizontal run is too great, or the vertical height exceeds five feet, a transfer pump is required. As a general rule, when static head and dynamic suction (horizontal head) exceed six inches hg (column mercury) an auxiliary pump and tank are required. A float tank or transfer tank is required with the auxiliary pump. The auxiliary pump should be of the positive displacement type, operated electrically from the load side of the transfer switch.

All tanks must be vented to a safe area in the event of an overflow and to allow air and other gases to escape to atmosphere. The vent must, however, prevent dust, dirt and moisture from entering the tank. Return lines are required. Keep the return space at least 12 inches away from the pick-up or fuel supply in the day tank. If this is not done, air bubbles could be entrapped in the fuel and cause erratic operation. At least five percent of capacity should be allowed in a diesel main tank for expansion of the fuel. If the main tank is to be located overhead, an auxiliary fuel shut-off solenoid should be used.

The capacity of the fuel tank will be determined by the fuel consumption of the unit and the continuous operating time necessary. Minimum fuel supply must be sufficient to allow the set to operate for the prescribed number of hours. Before installing a fuel tank, review all local code requirements governing fuel tanks.

The number of lines connected to an underground fuel tank, whose depth of burial exceeds the below grade depth of the electric generating unit, will vary as a function of day tank positioning with regard to the engine and the number of ancillary devices utilized. However, all underground tanks must have the following:

- A vent line terminating above ground level in a screened or hooded type vent cap with unrestricted opening to atmosphere and a safe area, in the event of an overflow, that meets all necessary codes.
- A fuel fill line terminating above grade level, and fitted with an appropriate cap, and terminating in a fuel filler box with an appropriate cap plainly marked for the fuel utilized.
- A fuel supply line connected from the tank to an electric fuel transfer pump is needed when the fuel tank is located below the fuel lifting capacity of the set. The end of the fuel supply line within the tank must be fitted with a foot valve (permits flow in one direction only) to prevent loss of transfer pump prime when the transfer pump is not in operation.
- The day tank should be positioned so that the bottom of the day tank is above the level of the engine fuel filters in order to provide a positive head of pressure for the fuel injection pump, (except for Cummins engines). The mounting of the day tank in this manner will prevent loss of prime to the unit fuel injection pump and is recommended particularly in applications where the unit is utilized as a standby power source. In all applications, the return lines should returned to the main tank.

Local and national regulations governing fuel tank location must be checked before planning the installation. Fuel tanks must be adequately vented to prevent pressurization due to fuel expansion when heated.

CAUTION

The fuel system needs to be sized to handle the fuel flow required by the engine. Engine fuel flow is greater than engine fuel consumption and varies for different engine models. Engine fuel flow and consumption can be found on the model specification sheets located in the Operation and Maintenance manual.

The fill, supply and return lines as well as all diesel fuel system piping must be constructed of black iron pipe. Do not use galvanized pipe for diesel fuel applications.

CAUTION

Galvanized tanks and piping must not be used since the diesel fuel and the galvanized coating react chemically to produce flaking which quickly clogs filters or causes failure of the fuel pump or injectors. Do not use Teflon tape on fuel fittings as it can clog the fuel injectors.

Cast iron and aluminum fittings and pipe should be avoided since they are porous and can leak fuel. Flexible fuel lines must be used to connect the unit to the fuel supply and return lines. Flexible lines must be of the type approved for diesel fuels.

WARNING!

Leaky fuel lines and fuel connections can introduce the possibility of explosion and fire, which can result in injury or death. Ensure fuel lines are properly connected and flexible lines are used between the engine and supply and return lines.

Fuel filters and drains must be located in easily accessible areas to promote regular and frequent service. Cleanliness of the fuel is critical for diesel engines that have easily damaged or clogged precision fuel injectors and pumps.

DAY TANK

The day tank provides a ready supply of fuel at the injector pump. Day tanks are used when the engine pump does not have the necessary lift to draw fuel from the main tank. If the main tank is above the level of the injectors, the day tank is used to remove the fuel head pressure that would otherwise be placed on the engine fuel system components.

When installing the day tank for Cummins engines, make certain the tank is at, or slightly below, the level of the fuel filters to assure maintenance of fuel

system prime. However, the top of the day tank must be below the injector drain connection of the engine.

A slight head of fuel can cause leakage through the injectors and result in hydraulic lock problems, (filling of the engine cylinder with liquid fuel). The injector return line must always be at or below the level of the fitting on the engine. The line must drain toward the day tank.

FUEL OIL TRANSFER PUMP

The fuel oil transfer pump (auxiliary pump) is used to supply fuel from the main tank to the day tank.

Single phase 120 VAC or 240 VAC, the AC power supply for the transfer pump should be taken from the load side of the transfer switch. The pump will operate when its circuit is closed by the action of the level switch.

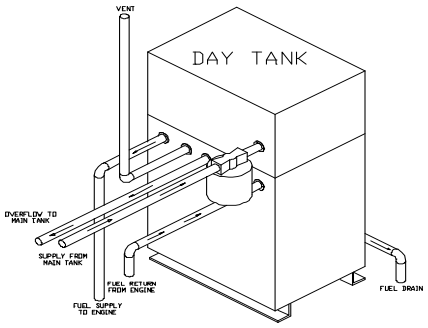

Figure 7-1: Fuel day tank

Fuel is then drawn from the main tank through a foot valve and is pumped into the day tank. Operation continues until the fuel level in the day tank rises causing the float to rise, opening the float switch and disconnecting the pump motor.

DIESEL FUEL RECOMMENDATIONS

Katolight Corporation recommends the use of #2-D diesel fuel.

#2-D Diesel Fuel:
A good quality 40 cetane (min) #2-D diesel fuel is best for most Katolight diesel generator set installations. This must be a distillate fuel which meets the requirements for #2-D in the ASTM diesel fuel classification D-975-60T. Most major brands of fuel oils conform to ASTM specifications.

#1-D Diesel Fuel:
A #1-D grade 40 cetane (min) diesel fuel may be best if operating at altitudes above 5000 feet or in cold weather (below 40° F) conditions. Kerosene is

included in the #1-D class of fuel. This fuel has a lower flash point (more volatile) and is of lower viscosity (flows more freely) than #2-D.

#2 Domestic Type (Furnace) Oil:
#2 domestic or furnace oil may be used. The #2 domestic fuel should have properties as close as possible to that of #2 diesel fuel. Check ASTM D-396-60T. Particular attention must be given to the sulfur content – this must be less than one percent by weight. High sulfur content can lead to increased engine wear and shorter injector life, especially if intermittent operation or low operating temperatures exist.

#4-D Grade Fuel: (NOT RECOMMENDED)
The high sulfur content plus low cetane rating of this class of fuel makes it unsuitable for diesel generator set use.

GASEOUS FUEL SYSTEMS

System Variations: The gaseous fuel systems used can be grouped in four general classifications. The systems are covered in the following sequence:

1. Natural Gas (including manufactured gas)
2. LP Vapor
3. Liquefied Withdrawal
4. Dual Fuel Systems (natural gas and LP gas)
5. Zero Pressure Regulation

1. & 2. NATURAL GAS AND VAPOR PROPANE (FIGURE 7-2A):

Natural, manufactured, sewage and most LP Vapor gas systems are vapor fuels as supplied by the utilities. These fuel system components are used in a similar manner. When the heating content of the fuel falls below 1000 BTU per cubic foot, as it does with manufactured sewage and some natural gas fuels, the set will have to be derated. Check with the factory for application details. The gas distribution companies will provide piping from the main transmission line to the building. The primary regulator should be furnished by the utility company. It is the responsibility of the utility company to insure that sufficient pressure is present at all times to operate the primary regulator. Installation, repair and alteration to gas piping should be undertaken only by the utility company or personnel authorized by them. Piping should be rigidly mounted but protected against damage from vibration. Only UL or AGA approved flexible connection should be used.

3. LIQUID WITHDRAWAL

Most LPG systems are operated from vapor. The main tank is sized to vaporize the fuel volume needed for ambient temperature of the installation. Sizing the LPG tank must be the responsibility of the fuel supplier. Give the fuel supplier the fuel volume required.

Vaporizers: Vaporizers are devices used exclusively with LPG systems. LPG in liquid form is introduced under tank pressure into the vaporizer which uses engine coolant heat to convert the liquid into a vapor state. Vaporizers may be referred to as converters; both names describe its function. There are several types of vaporizers. One type is strictly a vaporizer and must be used in conjunction with other pressure regulators. This type of vaporizer may be required if tank size is limited; low ambient temperatures or high fuel volume are conditions affecting the installation. The type classified as vaporizer-regulators provide vaporization plus primary and secondary regulation of gas pressure.

Fire regulations in most localities prohibit liquid LP high-pressure fuel lines inside a building or enclosure. This automatically precludes high-pressure equipment on or near an engine installed inside a building. Under such regulations, the coolant lines can be extended and the vaporizer mounted outside the structure.

Gas at permissible pressure (usually about 20 psi maximum) is allowed inside the building. The vaporizer must be mounted below the level of the engine water pump and within 25 feet of the engine. If freezing temperatures are common, don't overlook the fact that water inside the vaporizer could freeze unless antifreeze is added to the system.

4. DUAL FUEL SYSTEMS (NATURAL OR LP VAPOR)

In many applications, natural gas is the main fuel and LPG is used as the emergency fuel when natural gas is not available. The dual fuel system (in common use) offers automatic changeover from one fuel to the other.

During operation on natural gas, pressure existing in the common line to the carburetor closes off the LP Vapor regulator. Cutting off the natural gas operates a pressure switch in the line which automatically opens the LP Vapor solenoid and closes the natural gas solenoid.

5. ZERO PRESSURE REGULATION (SEE FIGURE 7-2B)

The Zero Pressure Regulator System works on Zero Pressure air and Zero Pressure gas, the engine vacuum is what mixes the fuel and air through the mixer on the carb.

The system still requires 7 to 11" of water column (4 to 6 ounces) on either Natural Gas or LP Vapor.

The flow control valve is left with the tower in the upright position on either fuel and with the spring left in. The Zero Pressure System only requires the installer to give the correct pressure and volume to the system. NOTE: A dog tag on the system shows the fuel consumption and pressures required for each system.

Gas Piping: Piping must never be used to ground electrical apparatus. Piping must be rigidly mounted but protected against vibration. Where flexible connections are required, use only approved connections. A flexible section should be used between the point where the gas leaves the rigid fuel line and enters the engine.

All gas lines and piping should be of black iron. Joints and connections must be sealed. The pipe should be of sufficient size to maintain the proper pressure level when operating at full load. In addition to the actual fuel consumption, the following factors must be considered:

- Pressure loss due to number of fittings
- Specific gravity of gas
- Pressure loss due to length of piping

At the end of the chapter is a list of steps to follow when calculating pipe capacities for gas flow rates.

This procedure is based on a pressure drop of 0.5" H2O which allows for a normal amount of restriction from fittings.

Table 7-1, Gaseous Fuel Pipe Capacity, lists the capacity of various sizes and lengths of pipe. The capacity (in cubic feet per hour) is calculated using the specific gravity of 0.6 as base. A pressure drop of 0.5" (water column) is used to account for a nominal number of fittings and metering equipment in this table.

Main Components: Solenoid valves used in a gaseous fuel system are designed to close and stop fuel the instant the engine stops. They should not be relied upon to completely seal the fuel system. A ruptured diaphragm or a piece of grit could prevent the valves from sealing. Resulting in gas continuing to flow through the carburetor into the engine and out into the surrounding air. Some gaseous fuels are heavier than air and tend to settle in low areas. This could present a serious hazard, especially in enclosed applications. Safeguards against this should be incorporated in each system.

The common components of a gas system are as follows:

Primary regulator: This regulator is used to provide pressure regulation of the gas from the high-pressure supply line or with LPG with the supply tank.

The primary regulator reduces line pressures to allowable inlet pressures for the secondary regulator. This regulator is supplied by the utility or fuel company.

Secondary regulator: The low-pressure type regulator admits fuel to the engine in response to engine demand similar to the float valve in a gasoline

carburetor. The secondary regulator is not supplied by Katolight and must be supplied by the purchaser. Natural gas and LPG vapor withdrawal inlet pressures must be from four to six ounces per square inch.

PRESSURE REDUCING VALVE

The pressure-reducing valve regulates the volume of fuel to the carburetor. The volume is proportional to the load on the engine.

This device is factory mounted for LP gas vapor withdrawal fuel systems, the valve is inverted and the internal spring removed. Consult factory for drawings showing modifications for propane fuel systems.

Fuel shut-off solenoid: This device automatically shuts off the fuel supply when the engine stops. All Katolight automatic fuel shut-off valves are electrically activated solenoids that seal off the fuel the instant the ignition switch is turned off.

Carburetor: Gas carburetors operate on gaseous fuels only.

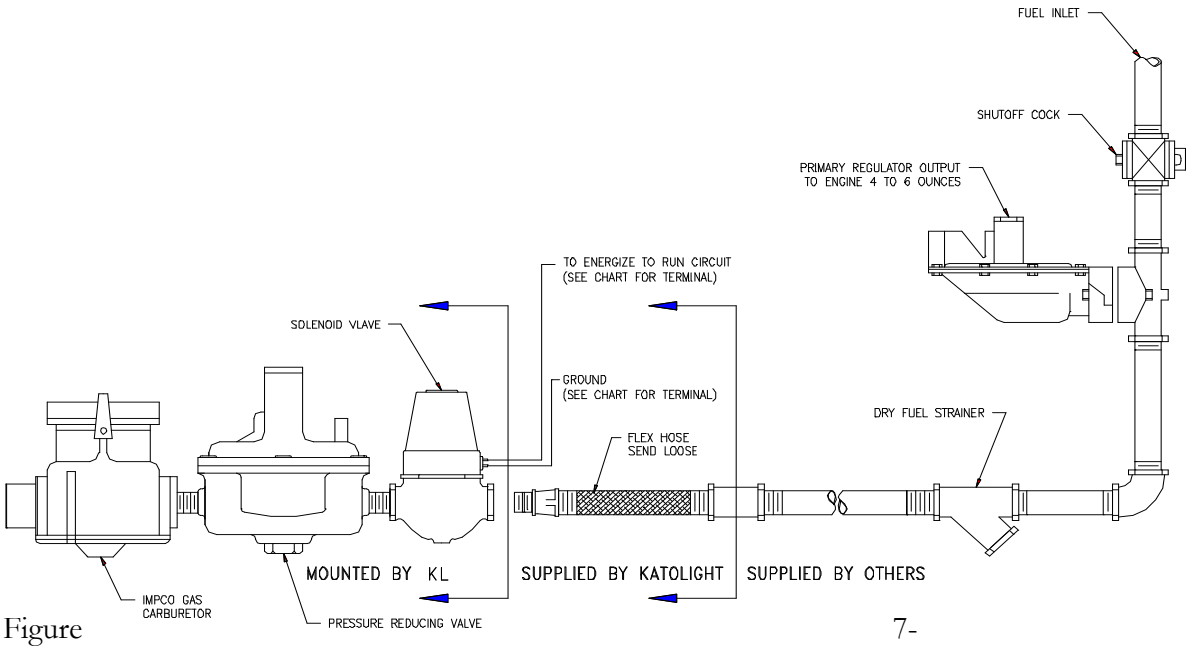

Figure 7-

2A: Gaseous fuel pipe schematic

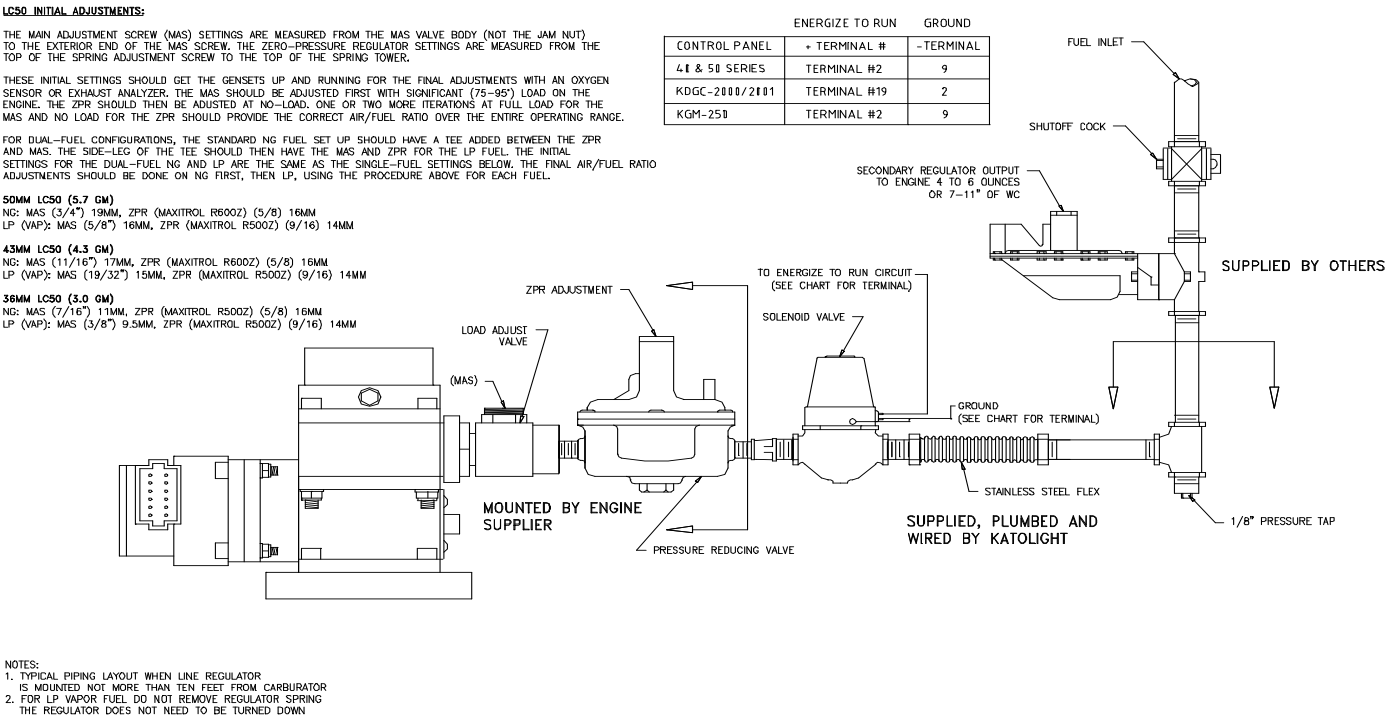

Figure 7-2B: Gaseous fuel pipe schematic with zero pressure regulator

DETERMINING PIPE SIZE FOR GASEOUS FUEL SYSTEMS

1. Obtain the fuel consumption in cubic feet per hour at 100% load from the engine generator model specification sheet for the type of fuel used.
2. Refer to the correction chart below and select the correction factor for the type of fuel used.

Fuel Specific Gravity	Fuel	Correction Factor
.65	Natural Gas	.962
1.00	Air	.775
1.50	Propane	.633
2.10	Butane	.535

3. Divide the fuel consumption from step 1 by the correction factor to obtain adjusted flow rate
4. Determine length of pipe between the fuel source and generator set
5. From table 6.1, choose the column of the nearest pipe length
6. Move down the column until the figure equal to or greater than the adjusted flow rate obtained in step 3 is encountered
7. Move horizontally to the left column to determine the correct pipe size

Iron Pipe Size (in.) Nominal	Length of Pipe (ft.)													
	10	20	30	40	50	60	70	80	90	100	125	150	175	200
1/4	43	29	24	20	18	16	15	14	13	12	11	10	9	8
3/8	95	65	52	45	40	36	33	31	29	27	24	22	20	19
1/2	175	120	97	82	73	66	61	57	53	50	44	40	37	35
3/4	360	250	200	170	151	138	125	118	110	103	93	84	77	72
1	680	465	375	320	285	260	240	220	205	195	175	160	145	135
1-1/4	1400	950	770	660	580	490	460	460	430	400	360	325	300	280
1-1/2	2100	1460	1180	990	900	810	750	690	650	620	550	500	460	430
2	3950	2750	2200	1900	1680	1520	1400	1300	1220	1150	1020	950	850	800
2-1/2	6300	4350	3520	3000	2650	2400	2250	2050	1950	1850	1650	1500	1370	1280
3	11000	7700	6250	5300	4750	4300	3900	3700	3450	3250	2950	2650	2450	2280
4	23000	15800	12800	10900	9700	8800	8100	7500	7200	6700	6000	5500	5000	4600

Table 7.1: Gaseous Fuel Pipe Capacity

EXAMPLE

- Engine – generator set operating with a fuel consumption of 700 cubic feet per hour and at a distance of 50 feet from the fuel supply
- Fuel used is propane and has a specific gravity of 1.5
- Dividing the flow rate of 700 CFH by the correction factor of 0.633 for propane gives the adjusted capacity of 1105 CFH
- Reading down the 50-foot pipe length column in table 6.1 until a figure equal to or greater than 1106 is encountered, we get a figure of 1680
- Reading directly across to the left column gives the required pipe size of 2 inches

8 Electrical Requirements

GENERAL

The electrical system consists of the AC power supplied to the generator and the DC starting and control circuitry. These circuits must be enclosed in separate conduits.

BATTERIES

The batteries need to be provided with enough capacity to provide the cranking motor current specified on the unit specification sheet. The recommended batteries are lead-acid or nickel cadmium. They can be shipped wet or dry. If shipped dry, they can be stored indefinitely and when ready to use filled with electrolyte (acid) with a specific gravity of 1.250 to 1.265. It is recommended that batteries be placed on trickle charge for 12 hours after electrolyte is added.

Batteries should be located as close as possible to the generator set to eliminate line losses.

Nickel cadmium batteries are shipped wet. It is advisable that batteries be placed on trickle charge for 12 hours when received.

Coat battery terminal connections with grease to prevent corrosion. Check the electrolyte level periodically. Make certain all vent caps are in place and unobstructed.

BATTERY RACKS AND CABLES

Where the battery installation requires remote battery location, the correct cross sectional area of battery cables is of importance in minimizing line drop. Battery racks or boxes are supplied by Katolight Corporation for lead-acid batteries.

AC POWER OUTPUT WIRING

All wiring must be in accordance with applicable electrical codes. Wires must be of adequate size, properly insulated and supported in an approved manner. Wires should not be placed where they may interfere with plant operation. Figure 8-1 illustrates the various generator connections for Katolight generators.

WARNING

Accidental contact with electrical equipment can cause severe injury and death if the equipment is not properly grounded. Ensure that all equipment is properly grounded.

AUTOMATIC TRANSFER SWITCH

Installing an automatic transfer switch is primarily an electrical operation and therefore should be handled by a licensed electrician. Instructions and detailed wiring diagrams will accompany the switch.

The transfer switch is designed to be mounted on a wall or other vertical surface free from vibration. The switch should be at the electrical service entrance and yet within 100 feet with No. 12AWG wire from the generator set control cabinet.

REMOTE/AUDIBLE ALARM

An external fault indicator or audible alarm can be wired to the generator set. Make certain external fault indicator or audible alarm is rated for 2 amperes maximum and 12 or 24 VDC depending on the DC voltage of the system. The indicator will become illuminated or the alarm will sound when an overcrank, low lube pressure, high coolant temperature or overspeed condition occurs.

ACCESSORY WIRING

When motor operated louvers are required for a generator set installation, the louver motors must be wired to operate whenever the engine generator set runs, during emergency conditions, normal periodic exercising, or for maintenance.

Katolight suggests the louver motors be wired to a distribution panel on the load side of the automatic transfer switch. The louver motor control circuit is wired to “energized to run” contacts in the generator set control panel.

TWELVE LEAD PARALLEL DELTA

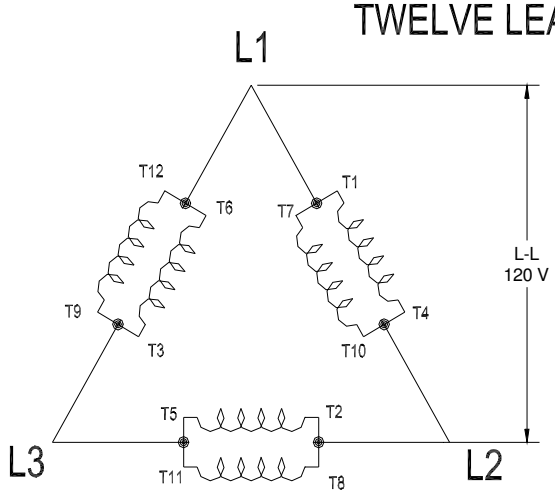

Delta connection with 12 lead generators only.

Voltages: 60 Hz 120v TO 139v
50 Hz 100v TO 120v

VOLTAGE	CONNECT		L1	L2	L3
120 DELTA	T1, T7, T6, T12	T2, T8, T4, T10	T1	T2	T3
	T3, T5, T9, T11				

TWELVE LEAD ZIG-ZAG OR OPEN DELTA

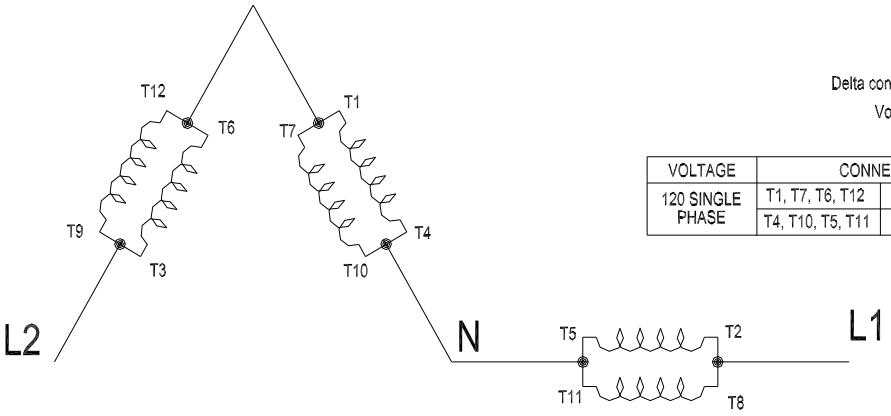

Delta connection with 12 lead generators only.

Voltages: 60 Hz 120/240v single phase
50 Hz 110/220v single phase

VOLTAGE	CONNECT		L1	L2
120 SINGLE PHASE	T1, T7, T6, T12	T3, T9	T2, T8	T3, T9
	T4, T10, T5, T11	T2, T8		

TWELVE LEAD SERIES WYE

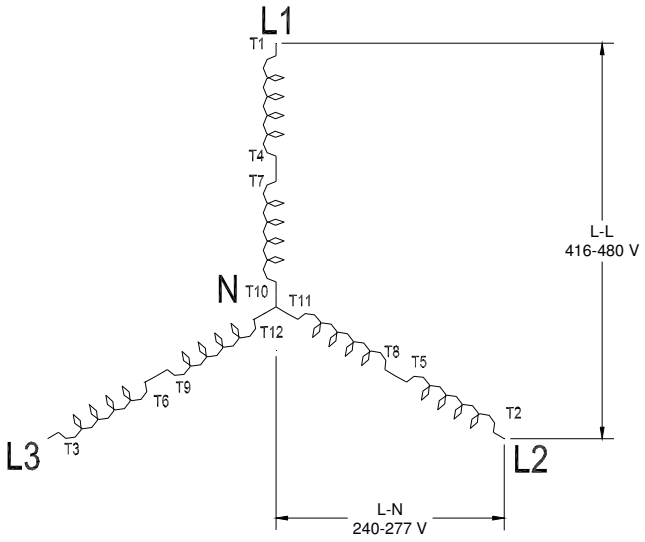

Voltages: 60 Hz 240/416v TO 277/480v
50 Hz 220/380v TO 240/416v

VOLTAGE	CONNECT			L1	L2	L3	NEUTRAL
480-416 WYE	T10, T11, T12			T1	T2	T3	T10, T11, T12
	T4, T7	T5, T8	T6, T9				

TEN LEAD SERIES WYE

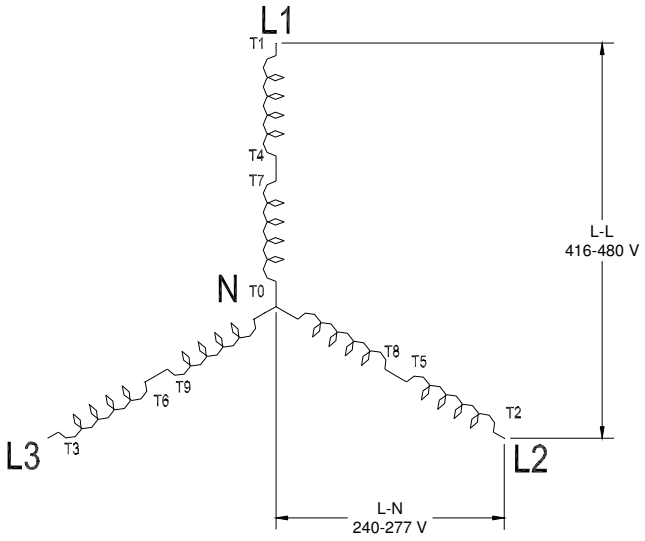

Voltages: 60 Hz 240/416v TO 277/480v
50 Hz 220/380v TO 240/416v

VOLTAGE	CONNECT			L1	L2	L3	NEUTRAL
480-416 WYE				T1	T2	T3	T0
	T4, T7	T5, T8	T6, T9				

TWELVE LEAD PARALLEL WYE

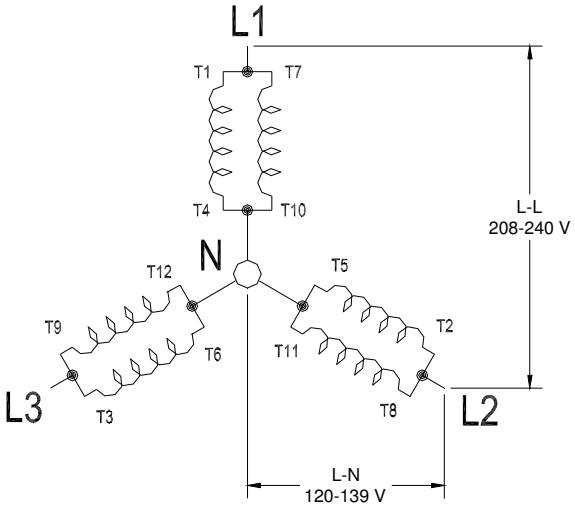

Voltages: 60 Hz 120/208v TO 139/240v
50 Hz 110/190v TO 120/208v

VOLTAGE	CONNECT			L1	L2	L3	NEUTRAL
240-208 WYE	T10, T11, T12		T4, T5, T6	T1	T2	T3	T10, T11, T12
	T1, T7	T2, T8	T3, T9				T4, T5, T6

TEN LEAD PARALLEL WYE

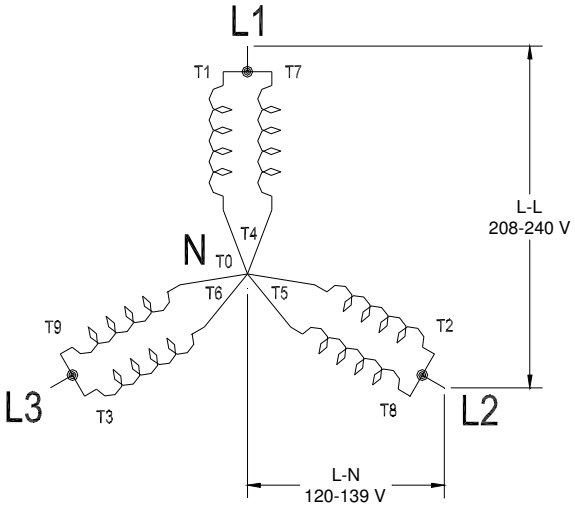

Voltages: 60 Hz 120/208v TO 139/240v
50 Hz 110/190v TO 120/208v

VOLTAGE	CONNECT			L1	L2	L3	NEUTRAL
240-208 WYE	T4, T5, T6, T0			T1	T2	T3	T4, T5, T6
	T1, T7	T2, T8	T3, T9				

TWELVE LEAD SERIES DELTA

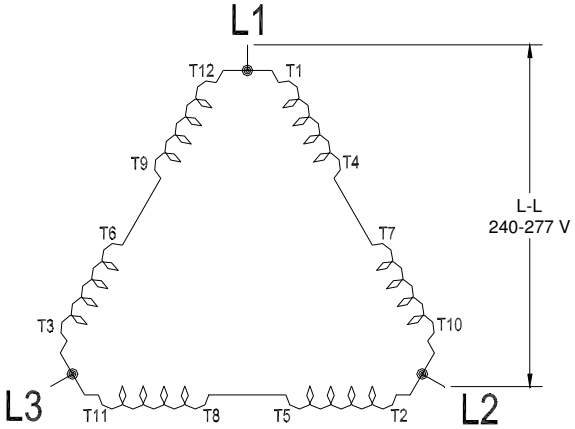

Voltages: 60 Hz 120/240v TO 138/277v
50 Hz 110/220v TO 120/240v

VOLTAGE	CONNECT			L1	L2	L3
240-277 DELTA	T4, T7	T5, T8	T6, T9	T1	T2	T3
	T1, T12	T2, T10	T3, T11			

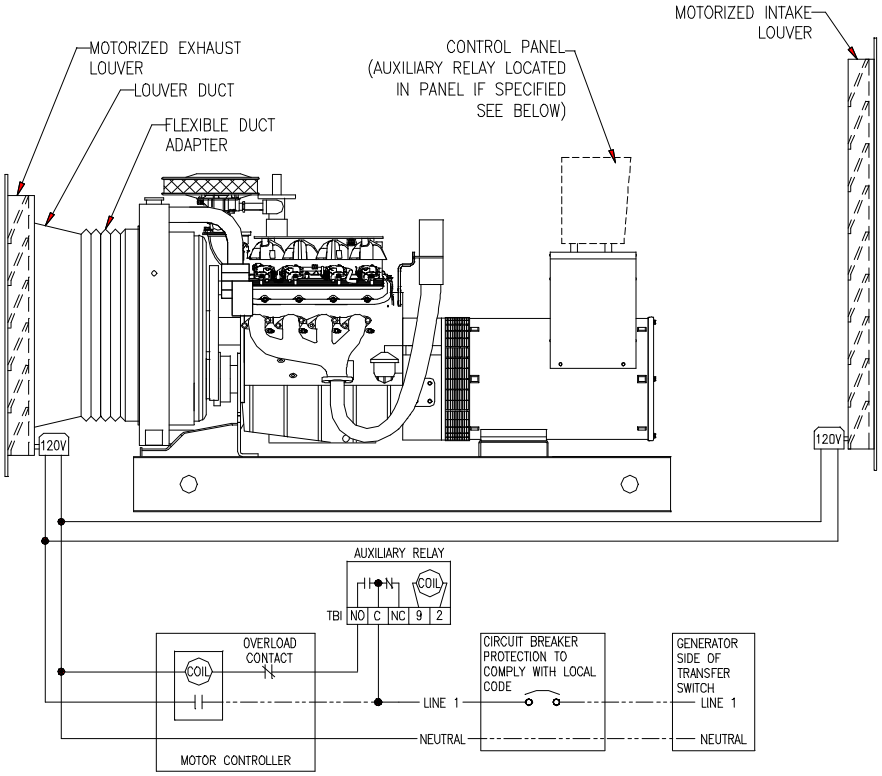

Figure 8-1: Suggested motorized louver wiring

As an alternate-wiring scheme, the louver motor may be wired directly to the generator output leads, prior to the mainline circuit breaker. The installation contractor must add any necessary wiring devices and circuit protection to comply with the local electrical code requirements.

There are many other wiring schemes, which may be used to safely wire the louver motors, and control circuits to insure the louvers will open when the engine generator set runs. If there are any questions, consult your generator set supplier.

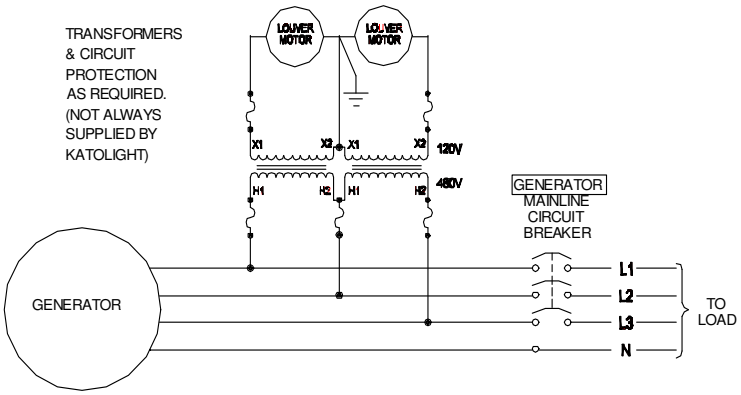

Figure 8-2: Optional motorized louver wiring

9 Service

Install the generator set in an area that can be quickly reached for repair in case of malfunction. Service entrances should be large enough to permit service of components such as engine, radiator or generator in the event major overhaul or replacement is needed.

The location for items requiring service varies from model to model. All service items should be known and considered when planning the installation. An item requiring daily attention must, of course, be made more accessible than one requiring service every 5,000 hours.

In general, the following service points should be accessible:

- Air Cleaner
- Primary Fuel Filter
- Secondary Fuel Filter
- Lube Oil Dip Stick
- Oil Filter
- Starting Battery
- Starter
- Battery Charger & Voltage Regulator
- Generator & Control Systems

If your generator set requires service or repairs, simply contact an authorized Katolight dealer for assistance. Service technicians are factory-trained and are capable of handling all of your service needs.

When contacting a Katolight Authorized Dealer, always supply the complete model number and serial number of your unit, which are located on your generator set nameplate.

To locate the Katolight Authorized Dealer nearest you, call 800-325-5450 or visit www.katolight.com.

NOTE

For standby units, it is important that servicing is performed on a calendar basis. Failure to do this may result in the generator set not starting or operating properly when the unit is most needed. Consult your Operation and Instruction Manual provided with the generator set for servicing information.

10 Installation Checklist

Prior to initial start-up, refer to the following installation checklist to ensure that the generator set is installed properly.

CHECK	OK	CHECK	OK
1. Adequate clearance on all sides.		18. Condensate trap or drain installed.	
2. Adequate incoming air flow.		19. Muffler exhaust flow in right direction.	
3. Adequate outgoing air flow.		20. Exhaust line free of excessive elbows and restrictions.	
4. Radiator duct flange connected.		21. Exhaust line shielded/protected.	
5. Antifreeze required/installed.		22. Battery in cool location.	
6. Water heater properly connected and of proper voltage.		23. Battery properly charged.	
7. Proper size fuel line and connectors.		24. Battery of proper size and voltage.	
8. Fuel lines protected.		25. Battery cables correct size.	
9. Fuel pump lift adequate.		26. Battery charger operating.	
10. Flexible fuel connectors.		27. Generator properly connected.	
11. Fuel return line.		28. All controller contacts clean.	
12. Gas pressure okay.		29. Transfer switch operating correctly.	
13. Solenoid shut-off valve installed (gas).		30. Binding posts tight (all connections).	
14. Proper size exhaust line.		31. Operator has instruction manual.	
15. Flexible exhaust connection installed.		32. Maintenance schedule posted.	
16. Exhaust nipple installed on manifold below flexible exhaust connection (condensate trap).		33. No loose parts, belts, bolts, nuts, etc.	
17. Exhaust piping sloped away from engine.			

11

Start-Up Request Form

To provide an authorized factory start-up at the lowest possible prices, we must request that the following checklist and tasks be completed prior to a Katolight representative's arrival at the installation site to perform the start-up.

Unit Serial Number: _____ Contact Name: _____

Company Name: _____ Title: _____

Please attach a map or directions to the site. Phone Number: _____

- ☐ Unit set in place on vibration pads with floor anchor/studs to prevent movement.
- ☐ Radiator ducted to properly sized air discharge louvers.
- ☐ Unit full of oil and water/anti-freeze mix.
- ☐ Battery filled with acid and fully charged.
- ☐ Battery charger mounted with AC and DC wired, if not supplied mounted by the factory.
- ☐ All AC and DC electrical connections made.
- ☐ Engine heater wired to normal AC power supply.
- ☐ Fuel inlet and return lines run between the unit and fuel storage system, system filled and primed to the engine with proper fuel.
- ☐ Exhaust system in place and supported so that the exhaust manifold does not carry weight of exhaust system.
- ☐ Air inlet louver motor wired to an emergency generator source point to open upon the start of an engine generator set.
- ☐ Generator room cleaned of construction debris including excess nails, bolts, nuts, panel knockouts, etc. It is very important that the radiator fan area is checked for debris, as damage to the equipment and personal injury can occur if loose items come in contact with the fan when the unit is initially started.

Consult your Katolight Installation Guide on any questions.

If, upon arrival at the installation site, our representative cannot perform the start-up as a result of defective Katolight equipment, the problems will be resolved and we will reschedule another start-up date at the earliest possible date at no additional charge.

If the start-up cannot be performed due to an incomplete installation or for reasons beyond Katolight's control, you may incur an additional start-up charge at a later date.

Signature: _____ Date: _____



PO BOX 3329
100 Power Drive
Mankato, MN 56001
Phone: 507-625-7973
Fax: 507-625-2968
www.katolight.com



Basic Generator Set Operation and Instruction Manual

100 Power Drive Mankato, MN 56001
Phone 507.625.7973 Fax 507.625.2968 Toll Free 800.325.5450 www.katolight.com
Basic_Manual_KL_10-04

CALIFORNIA

Proposition 65 Warning Diesel engine exhaust and some of its constituents are known to the State of California to cause cancer, birth defects, and other reproductive harm.

IMPORTANT SAFETY INSTRUCTIONS

SAVE THESE INSTRUCTIONS – This manual contains important instructions that should be followed during installation and maintenance of the generator and batteries

SAFETY PRECAUTIONS

Before operating the generator set, read the operators manual! Become familiar with the equipment and safe operating procedures. Safe operation can be achieved only if the equipment is properly operated and maintained.

Dangers, Warnings and Cautions are used in this publication to alert the operator to special instructions concerning a particular procedure that may be hazardous if performed incorrectly. These "Safety Alerts" alone can not eliminate the hazards that they signal. Strict compliance to these special instructions when performing the service, plus "common sense" operation, are major accident prevention measures. Katolight Corporation can not anticipate every possible circumstance that might involve a hazard. The warnings in this Manual and on tags and decals affixed to equipment are, therefore, not all-inclusive.

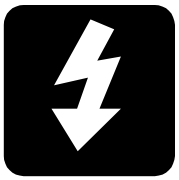

This symbol signifies high voltage.

The following safety rules should be strictly complied with:

The standby electric system must be installed, tested, and inspected per the manufacturer's recommendations. All codes, standards, regulations, and laws pertaining to the installation must be strictly complied with.

DANGEROUS voltages are present at power terminals of this equipment. Contact with such terminals will result in extremely dangerous and possibly lethal electric shock. Never allow any unqualified person to install, operate or service the equipment.

! CAUTION ! RISK OF ELECTRIC SHOCK!

The grounded conductor must be bonded to ground in accordance with the National Electric Code, NFPA 70. The unit shall not be used in floating output applications.

! CAUTION !

The frame and external electrically conductive parts of this equipment must be properly connected to an approved earth ground, in accordance with applicable electrical codes. A grounding lug is provided on the generator and in other equipment for this purpose.

WARNING

Accidental contact with electrical equipment can cause severe injury and death if the equipment is not properly grounded. Ensure that all equipment is properly grounded.

Gaseous, Natural Gas and Liquid Propane Gas are extremely flammable and vapors are ***EXPLOSIVE.***

Diesel fuel is highly flammable. Comply with all laws regulating the storage and handling of these fuels. Check for leaks frequently and correct such leakage immediately.

Engine exhaust gases contain ***DEADLY*** carbon monoxide gas. If breathed in sufficient concentrations, this gas can cause unconsciousness or even death. Provide adequate ventilation to prevent buildup of exhaust gases. When the generator is installed inside a room or enclosure, exhaust gases must be piped outdoors. Install the exhaust system so exhaust gas does not leak at joints or piping connections. The exhaust manifold, turbocharger(s), and extended exhaust piping are ***HOT*** when the engine is running. These can remain hot for long periods of time after the engine shuts off. Avoid contact with these parts. Consider insulating the exhaust system if installation is such that unintentional contact with the exhaust system components is likely.

Coolants under pressure have a higher boiling point than water. ***DO NOT*** open a radiator or heat exchanger pressure cap while the engine is running. Allow the generator set to cool and bleed the system pressure first.

Wear protective safety eyeglasses and gloves when handling starting batteries and electrolyte. Battery acid can cause serious burns if it contacts eyes and skin.

Servicing of batteries is to be performed or supervised by personnel knowledgeable of batteries and the required precautions. Keep unauthorized personnel away from batteries.

CAUTION-The replacement starting battery or batteries must be of equal size and cold cranking amps. Observe all precautions listed below.

CAUTION-The generator controls must be in the off position when replacing the batteries.

CAUTION-Do not dispose of battery or batteries in a fire. The battery is capable of exploding.

CAUTION-Do not open or mutilate the battery or batteries. Released electrolyte has been known to be harmful to the skin and eyes and to be toxic.

CAUTION-A battery presents a risk of electrical shock and high short circuit current. The following precautions are to be observed when working on batteries:

1. Remove watches, rings, or other metal objects.
2. Use tools with insulated handles.

Vented Batteries

The installation of the engine generator shall provide enough ventilation to ensure that gases generated by vented batteries during charging or caused by equipment malfunction are removed.

CAUTION-The electrolyte is a dilute sulfuric acid that is harmful to the skin and eyes. It is electrically conductive and corrosive. The following procedures are to be observed:

1. Wear full eye protection and protective clothing.
2. Where electrolyte contacts the skin, wash it off immediately with water.
3. Where electrolyte contacts the eyes, flush thoroughly and immediately with water.
4. Spilled electrolyte is to be washed down with an acid-neutralizing agent. A common practice is to use a solution of one pound (500 grams) bicarbonate of soda solution is to be added until the evidence of reaction (foaming) has ceased. The resulting liquid is to be flushed with water and the area dried.

CAUTION-Lead acid batteries present a risk of fire because they generate hydrogen gas. The following procedures are to be followed:

1. DO NOT SMOKE when near batteries.
2. DO NOT cause flame or spark in battery area.
3. Discharge static electricity from body before touching batteries by first touching a grounded metal surface.

Moving parts can cause severe personal injury or death. Do not wear loose clothing or jewelry in the vicinity of moving parts, or while working on

electrical equipment. Loose clothing and jewelry can become caught in moving parts. Jewelry can short out electrical contacts and cause shock or burning.

Remove all unnecessary grease and oil from the unit. Accumulated grease and oil can cause overheating and engine damage, which present a potential fire hazard.

When an open bottom is used, instructions shall state that the stationary engine generator assembly is to be installed over noncombustible materials and shall be located such that it prevents combustible materials from accumulating under the generator set.

OPERATION PROCEDURES

Installation Procedures: Refer to Katolight's "Installation Guide"

! CAUTION !

The high engine temperature shutdown system will not operate if the coolant level is too low. The high engine temperature sensor monitors coolant temperature. Loss of coolant will prevent sensor operation and allow the engine to overheat causing severe damage to the engine. Therefore, maintain adequate coolant level for proper operation of the high engine temperature shutdown system.

Low Coolant Level Shutdown – A submerged sensor in the top portion of the radiator shuts down the engine and lights the Hi Engine Temp fault lamp when the coolant level falls below the level of the sensor. Top off coolant frequently.

Prior to starting or testing the generator set refer to the engine manual for maintenance checkpoints. Items such as oil level, coolant level, belt tension, battery electrolyte level, wire connections, air filter are some of those that should be checked frequently.

! CAUTION !

Stop engine before filling fuel tank. Never fill tank when engine is hot.

STARTING PROCEDURE

The following sections cover the three systems used to start the generator set. See Pages 8 – 14 for panel description and illustrations.

Starting at Control Panel
Move the RUN/OFF/AUTO switch on the control panel to the RUN position. This will activate the engine control system and the starting system. The starter will begin cranking and after a few seconds the engine should start. The starter will disconnect when the engine reaches a speed of 500-750 RPM. If the engine does not start, the starter will disengage at the end of the cranking cycle. Katolight generator sets with the cycle cranking will crank for 10 seconds and then rest

for 10 seconds until 5 cycles have been completed, then lock out on overcrank (fail to start). To clear an overcrank fault, place the RUN/OFF/AUTO switch in the OFF position. Wait two minutes for the starter motor to cool and

then repeat the starting procedure. If the engine does not run after a second attempt at starting, refer to the Troubleshooting section.

Automatic Starting
Place the RUN/OFF/AUTO switch on the generator set control panel in the AUTO position if an automatic transfer switch is used. This allows the transfer switch to start the generator set if a power outage occurs and stop it when the power returns. **Be aware the genset could start at any time in the "AUTO" mode – keep clear of all moving parts and be sure to turn switch to "OFF" position before servicing and disconnect the negative battery cable after disconnecting the battery charger circuit.**

STOPPING

Before Stopping
Run the generator set at no load for three to five minutes before stopping. This allows the lubricating oil and engine coolant to carry heat away from the combustion chamber and bearings.

To Stop
If the set was started at the set control panel or at a remote control panel, move the RUN/OFF/AUTO switch or remote starting switch to the OFF position. If an automatic transfer switch started the set, the set will automatically stop after the normal power source returns, and time delays have been satisfied.

BREAK-IN

Drain and replace the crankcase oil and oil filter(s) after the first 30 to 50 hours of operation on new generator sets. Refer to the MAINTENANCE section of the Engine manual for the recommended procedures. It is recommended to achieve the break in during the first 2 months after installation is completed. This will familiarize the operator with the system.

NO-LOAD OPERATION

Periods of no load operation should be held to minimum. If it is necessary to keep the engine running for long periods of time when no electric output is required, best engine performance will be obtained by connecting a “dummy” electrical load. Such a load could consist of Load Banks.

EXERCISE PERIOD

Generator sets on continuous standby must be able to go from a cold start to being fully operational in a matter of seconds. This can impose a severe burden on engine parts. Regular exercising keeps engine parts lubricated, prevents oxidation of electrical contacts and in general helps provide reliable engine starting. Exercise the generator set at least once a week for a minimum of 30 minutes with load so the engine reaches normal operating temperatures. The Automatic Transfer switch has an optional exerciser that can be preset to provide regular exercise periods. Typically the exerciser can be set for time of start, length of run, and day of week.

LOW OPERATING TEMPERATURES

Use a coolant heater if a separate source of power is available. The optional heater will help provide reliable starting under adverse weather conditions.
Be sure the voltage of the separate power source is correct for the heater element rating. The heater should be in use year round. A heater is required on all automatic systems to prevent engine damage due to short warm up cycles.

AUTOMATIC TRANSFER SWITCH

! DANGER !

HAZARDOUS VOLTAGE
Will cause severe injury or death.
Turn OFF all power before installation, adjustment or removal of transfer switch or any of its components.

EQUIPMENT INSPECTION

Immediately inspect the transfer switch when received to detect any damage, which may have occurred during transit. If damage is found or suspected, file claims as soon as possible with the carrier and notify the nearest Katolight representative. The switch cabinet should be opened at inspection to check for internal freight damage, even if the box and cabinet enclosure appear undamaged.

FINAL EQUIPMENT INSPECTION

Prior to energizing the transfer switch:

Remove any debris incurred due to shipment or installation. DO NOT use a blower since debris may become lodged in the electrical and mechanical components and cause damage. Use of a vacuum is recommended.

Verify that all cabled connections are correct. Verify phase rotation and position of the high leg at both sources on the delta system.

Check engine start connections and verify the correct connection of all control wires.

Check settings of all timers and adjust as necessary. Also adjust any optional accessories as required.

Check the integrity of power connections by verifying actual lug torque values as specified in the ATS manual.

Make sure that all covers and barriers are installed and properly fastened.

FUNCTIONAL TEST

Since there are various transfer switch designs available, please refer to the operator manual provided with the transfer switch for specific details.

The functional testing of the transfer switch consists of electrical tests described in this section. Before proceeding, refer to the information package supplied with the transfer switch. Read and understand all instructions and review the operation of all accessories provided.

Before starting the operation test, check the equipment-rating nameplate on the transfer switch to **verify the correct system voltage.**

To begin the test, close the Normal source circuit breaker. The micro-controller will illuminate the Normal Available LED if proper voltage is sensed. Verify the phase-to-phase voltages at the Normal line terminals.

Next, close the Emergency source breaker and start the engine generator. The Emergency Available LED indicator will illuminate when preset voltage and frequency levels are achieved. Check the phase-to-phase voltages at the Emergency line terminals. Also, verify that the phase rotation of the Emergency source is the same as the phase rotation of the Normal source.

After the sources have been verified, shut down the engine generator, and put the starting control in the automatic position. Complete the visual inspection of the transfer switch, and close and lock the cabinet door.

Initiate the electrical transfer test by activating the test switch. **Hold the test switch until transfer to Emergency is accomplished.** After the engine start time delay, the micro-controller will send an engine start signal and sensing will determine when the auxiliary source reaches preset levels. The switch will transfer to the Emergency source after the time delay of the transfer to the Emergency timer.

Deactivating the test switch will start retransfer to the Normal source. The switch will retransfer to the Normal source after the time delay of the retransfer to Normal timer. The engine over-run timer allows the engine generator to run unloaded for a preset cool-down period.

For complete details of timer and voltage sensing operations, please refer to the Automatic Transfer Switch Operation Manual.

MAINTENANCE AND TESTING

A preventive maintenance program will insure high reliability and long life for the transfer switch. The preventive maintenance program for the transfer switch should include the following items.

INSPECTION AND CLEANING

! DANGER !

HAZARDOUS VOLTAGE
De-energize all sources of power before doing any work on the transfer switch. Note: If approved disconnects are not in place contact your Local Electric Utility or a qualified Electrician before proceeding.

The switch should be inspected for any accumulation of dust, dirt, or moisture, and should be cleaned by vacuuming or wiping with a dry cloth or soft brush. DO NOT use a blower since debris may become lodged in the electrical and mechanical components and cause damage.

Remove the transfer switch barriers and check the condition of the contacts. Any surface deposits must be removed with a clean cloth (DO NOT USE EMERY CLOTH OR A FILE). If the contacts are pitted or worn excessively, they should be replaced. A general inspection of mechanical integrity should be made to include loose, broken or badly worn parts.

SERVICING

All worn or inoperative parts must be replaced using recommended replacement parts. Please refer to the Replacement Parts manual for specific part information and ordering procedures. Please contact your nearest Distributor.

The operating mechanism of the transfer switch is lubricated. The lubricant applied at the factory provides adequate lubrication for the lifetime of the switch. Should debris contaminate the mechanism, clean and apply additional lubricant. (See Automatic Transfer Switch Manual for proper lubricant type).

TESTING

A manual operator handle is provided with the transfer switch for maintenance purposes only. Manual operation of the switch must be checked before it is operated electrically. Both power sources MUST be disconnected before manual operation of the switch. Insert the handle and operate the transfer switch between the Normal and Emergency positions. The transfer switch should operate smoothly without binding. Return the switch to the Normal position, remove the handle, and return it to the holder provided.

After completing the inspection, cleaning and servicing of the transfer switch, reinstall the switch cover, and close and lock the cabinet door. Reclose the circuit breakers feeding the utility and generator sources to the switch.

Initiate the electrical transfer test by activating the test switch. Engine start timer will time out and the micro-controller will send an engine start signal. When the transfer to Emergency time has elapsed, the switch will complete its transfer by closing into the Emergency source.

Deactivating the test switch will start retransfer to the Normal source. The switch will complete its retransfer to Normal after the time delay of the retransfer to Normal timer. The engine over-run timer allows the engine generator to run unloaded for a preset cool down period.

GOVERNORS

MECHANICAL GOVERNOR ADJUSTMENTS

All Katolight Gen-Sets are tested at full load prior to shipment and the speed settings are adjusted. The typical settings will vary from 60 – 63 Hz at no load and are set to operate at 60 Hz when loaded to the nameplate rating. If the system load does not reach the nameplate rating the speed can be adjusted down to 60 Hz. Care must be taken to insure that the Katolight Gen-Set operates at no less than 60 Hz when the entire load to be on the unit is applied. See Figures 2 – 1 and 3 – 1 to find the typical speed adjust locations.

ELECTRONIC GOVERNOR DIESEL ADJUSTMENTS

Governor Speed Setting (Diesel)

The governed speed set point is increased by clockwise rotation of the Speed adjustment control. Remote speed adjustment can be obtained with an optional Speed Trim Control. See Figure 1 –1.

Governor Performance (Diesel)

Once the engine is at operating speed and at no load, the following governor performance adjustments can be made: Rotate the Gain adjustment clockwise until instability develops. Gradually move the adjustment counterclockwise until stability returns. Move the adjustment 1/8 of a turn further counterclockwise to insure stable performance.
Rotate the Stability adjustment clockwise until instability develops. Gradually move the adjustment counterclockwise until stability returns. Move the adjustment 1/8 of a turn further counterclockwise to insure stable performance.
Gain and stability adjustment may require minor changes after engine load is applied. Normally, adjustments made at no load achieve satisfactory performance. A strip chart recorder can be used to optimize the adjustments further. If instability cannot be corrected or further performance improvements are required, contact the nearest distributor or Service Center.

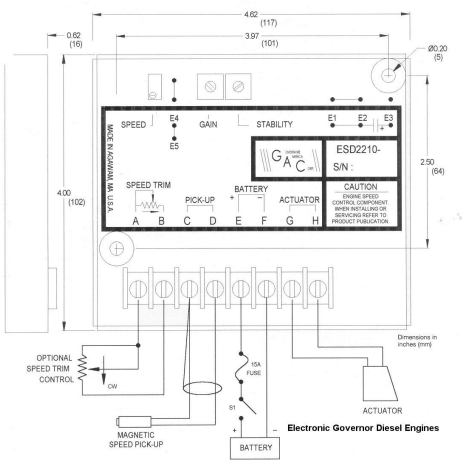

FIGURE 1-1
STANDARD GAC GOVERNOR CONTROL

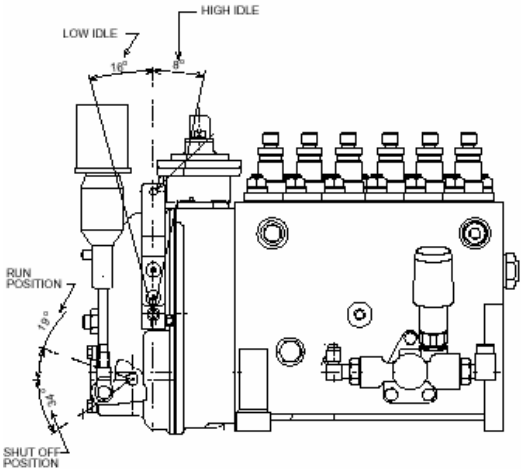

FIGURE 2-1
STANDARD MECHANICAL GOVERNOR FOR DIESEL ENGINES.

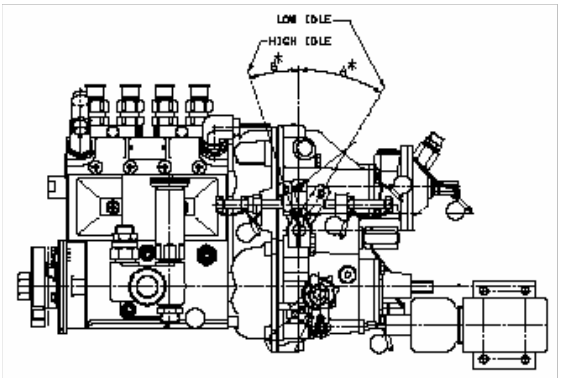

FIGURE 3-1
STANDARD MECHANICAL GOVERNOR FOR DIESEL ENGINES

Gas Engine Governor System

The gaseous engines utilize an electronic governor as standard. The governors are microprocessor controlled and have no operator accessible adjustments. The speed is factory set to operate at 60.1 hertz.

TROUBLESHOOTING

The generator set has a number of sensor units that continuously monitor the engine for abnormal conditions such as low oil pressure or high coolant temperature. If an abnormal condition does occur, the engine monitor will activate a fault lamp and may also stop the engine depending on the condition. If the generator set does shut down, the operator may be able to restart the set after making certain adjustments or corrections. This section describes the operation of the fault condition system and suggested troubleshooting procedures for the operator.

Safety Considerations
High voltages are present within the control panel and generator outlet box when the generator is running.

! WARNING !

Contacting high voltage components can cause serious personal injury or death. Keep control and outlet box covers in place during troubleshooting.

Generator set installations are normally designed for automatic starting or remote starting. When troubleshooting a set that is shut down make certain the generator set cannot be accidentally restarted. Place the RUN/OFF/AUTO switch in the OFF position and remove the negative battery cable from the starting battery. Also, be sure to turn battery charger disconnect off before servicing battery circuits.

! WARNING !

Accidental starting of the generator set during troubleshooting can cause severe personal injury or death. Disable the generator set before troubleshooting.

When a fault comes on during operation the type of fault will be displayed on the LCD panel. The control panel will also illuminate an indicator light to correspond with the display. The red LED light will indicate fault (shutdown alarm) or the yellow LED pre-alarm (approaching shut down point).

Display Mode Switch
This switch allows the operator to lock the display by moving the switch upward when in the scroll lock mode, the display will not update. By moving the toggle downward the display will show total run time. When the mode switch is in the mid position (normal mode), the display will scroll through all parameters. Follow the trouble shooting procedures to locate and correct the problem. For any symptom not listed, contact your Distributor for service. Voltage and amperage may display 3 phases, when operated single phase. The unused positions will display “0”.

Resetting the Control
Placing the RUN/OFF/AUTO switch in the OFF position and pressing the alarm silence switch can deactivate the external alarm and fault lamp. Locate the problem and make the necessary corrections before restarting the generator set.

Main Line Circuit Breaker
The generator output mainline circuit breaker is mounted inside the generator outlet box. If the load exceeds the breaker current rating, the breaker will open to prevent the generator from being overloaded. If the circuit breaker trips, locate the source of the overload and correct as required. Manually reset the breaker to reconnect the load to the generator, by pushing the handle down to the open OFF position, then up to the closed ON position.

TROUBLESHOOTING

! WARNING

Many troubleshooting procedures present hazards, which can result in severe personal injury or death. Only qualified service personnel with knowledge of fuels, electricity, and machinery hazards should perform service procedures. Review safety precautions on inside cover page.

SYMPTOM As Indicated on Display Screen	CORRECTIVE ACTION
1. PRE HI ENGINE TEMP. Engine continues to operate.	**1.** Indicates engine has begun to overheat and engine temperature has risen to approximately 215°F (102°C). If generator is powering non-critical and critical loads and cannot be shut down. Use the following: a. Reduce load if possible by turning off non-critical loads. b. Check air inlets and outlets and remove any obstructions to airflow. c. Open doors or windows in generator area to increase ventilation. If engine can be stopped, follow procedure in Step 2.
2. HI ENGINE TEMP LED. Engine shuts down.	**2.** Indicates engine has overheated (engine temperature has risen above 225°F/107°C) or coolant level is low (sets with coolant level sensor). Allow engine to cool down completely before proceeding with the following checks: a. Check coolant level and replenish if low. Look for possible coolant leakage points and repair if necessary. b. Check for obstructions to cooling airflow and correct as necessary. c. Check for a slipping fan belt and tighten if loose. d. Reset control and restart after locating and correcting problem. Contact your Dealer or Distributor if none of the above.

3. PRE LOW OIL PRESSURE. Engine continues to operate.	**3**. Indicates engine oil pressure has dropped to 20 psi (138kPa). If generator is powering critical loads and cannot be shut down, wait until next shutdown period and then follow Step 4 procedure. If engine can be stopped, follow procedures in Step 4.
4. LOW OIL PRESSURE. Engine shuts down. **NOTE:** See also Step 5	**4.** Indicates engine oil pressure has dropped to 15 psi (103kPa). Check oil level, lines and filters. If oil system is okay, but oil level is low, replenish. Reset control and restart. Contact your Dealer or Distributor if oil pressure is not in the range of 35 to 55 psi (241 to 379 kPa).
5. OVERCRANK. Engine stops cranking. Or Engine runs, shuts down, and LOW OIL PRESSURE.	**5.** Indicates possible fuel system problem. a. Check for empty fuel tank, fuel leaks, or plugged fuel lines and correct as required. b. Check for dirty fuel filter and replace if necessary (See Maintenance section of Engine Manual). c. Check for dirty or plugged air filter and replace if necessary (See Maintenance section of Engine Manual). d. Refer to Step 4. e. Reset the control and restart after correcting the problem. Contact your Dealer or Distributor for service if none of the above.
6. OVERSPEED, Engine runs and then shuts down.	**6** Indicates engine has exceeded normal perating speed. Refer to governor adjust procedure. Contact your Dealer or Distributor for service.
***7.** UNIT NOT IN AUTO.	**7.** Indicates AUTO/OFF/RUN switch is in the OFF position which will prevent automatic starting if an automatic transfer switch is used. Move the AUTO/OFF/RUN switch to the AUTO position for automatic starting.
8. LOW FUEL. Engine continues to run.	**8.** Indicates diesel fuel supply is running low. Check fuel supply and replenish as required.
9. LOW FUEL and LOW OIL.	**9.** Indicates engine has run out of fuel. Check fuel level and replenish as required. See Engine Manual for fuel system priming procedure.

10. LOW ENGINE TEMPERATURE. Set is in standby mode but not operating.	**10.** Indicates engine coolant heater is not operating or is not circulating coolant. Check for the following conditions: a. Coolant heater not connected to power supply. Check for blown fuse, open circuit breaker or disconnected heater cord and correct as required. b. Check for low coolant level and replenish if required. Look for possible coolant leakage points and repair as required. c. Contact your Dealer or Distributor if none of the above.
11. Engine starts from generator control panel, but will not start automatically or from a remote panel. (Note: The AUTO/OFF/RUN switch must be in the AUTO position.) Automatic or remote starting	**11.** Indicates possible fault with remote start circuit. Check the following: a. Check wire to ATS. b. See ATS section for further troubleshooting. c. Contact your Dealer or Distributor for assistance.
12. Engine will not crank.	**12.** Indicates possible fault with control or starting system. Check for the following conditions: a. Fault lamp on. Correct fault and reset control. b. Poor battery cable connections. Clean the battery cable terminals and tighten all connections. c. Discharged or defective battery. Recharge or replace the battery. d. Contact your Dealer or Distributor for assistance if none of the above.
13. No AC output voltage.	**13.** Indicates possible fault with voltage regulator. a. Verify output with another meter if ok check meter, if ok check meter fuses. b. Regulator fuse is blown. Replace fuse. Contact your Dealer or Distributor if voltage build-up causes fuse to blow. c. Check rotating rectifier for damaged diodes. Replace all diodes if any are failed.

14. No Engine Start	**14.** Indicates Engine Start wires not terminated properly or Generator in OFF position. a. Check Engine Start connections. b. Investigate why Engine Control Switch was put in off. c. Contact your Dealer or Distributor for assistance.
15. No Engine Stop	**15.** Indicates Timing Cycle not complete, Engine Start wires not terminated correctly or Generator in RUN. a. Check Engine Start Timer setting. b. Check Engine Start Connections. c. Investigate why the Engine Control Switch was put in Manual. d. Contact your Dealer or Distributor for assistance.
16. ATS will not transfer to Emergency	**16.** Indicates Emergency voltage or frequency not within acceptable parameters, Power supply harness unplugged, Limit Switch harness unplugged or Timing Cycle not complete. a. Check Engine Start connections, Generator output, and Engine Control Switch. b. Plug in Power Supply harness. c. Plug in Limit Switch harness. d. Check transfer to Emergency Timer setting. e. Contact your Dealer or Distributor for assistance.
17. ATS will not transfer to Normal	**17**. Indicates Normal voltage or frequency not within acceptable parameters, Power Supply harness unplugged, Limit Switch harness unplugged or retransfer to Normal timing cycle not complete. a. Check Utility and Utility breakers. b. Plug in Power Supply harness. c. Plug in Limit Switch harness. d. Check retransfer to Normal Timer setting. e. Contact your Dealer or Distributor for assistance.

Mitsubishi D15 to D20

Model Nissan Motors	Voltage - Phase	Ambient Rating in °F	Nominal Voltage	CCA Lead Acid	CCA NiCad	FLA	Recommended Wire Qty / Size Stranded Copper
D15FRY4	480V - 3∅	122°F	12 VDC	625	640	23	1 – 14 AWG
D15FPY4	208V - 3∅	122°F	12 VDC	625	640	52	1 – 8 AWG
D15FJY4	240V - 3∅	122°F	12 VDC	625	640	45	1 – 8 AWG
D15FNY4	600V - 3∅	122°F	12 VDC	625	640	18	1 – 14 AWG
D15FGY4	240V - 1∅	122°F	12 VDC	625	640	63	1 – 6 AWG
D15FDY4	240V - 1∅	122°F	12 VDC	625	640	63	1 – 6 AWG
D20FRY4	480V - 3∅	122°F	12 VDC	625	640	30	1 – 12 AWG
D20FPY4	208V - 3∅	122°F	12 VDC	625	640	69	1 – 6 AWG
D20FJY4	240V - 3∅	122°F	12 VDC	625	640	60	1 – 6 AWG
D20FNY4	600V - 3∅	122°F	12 VDC	625	640	24	1 – 14 AWG
D20FGY4	240V - 1∅	122°F	12 VDC	625	640	83	1 – 4 AWG
D20FDY4	240V - 1∅	122°F	12 VDC	625	640	83	1 – 4 AWG

Mitsubishi D600 to D2000

Model Nissan Motors	Voltage - Phase	Ambient Rating in °F	Nominal Voltage	CCA Lead Acid	CCA NiCad	FLA	Recommended Wire Qty / Size Stranded Copper
D600FRY4	480V - 3∅	100°F	24 VDC	1250	1260	902	3 – 300 MCM
D600FPY4	208V - 3∅	100°F	24 VDC	1250	1260	2082	5 – 500 MCM
D600FJY4	240V - 3∅	100°F	24 VDC	1250	1260	1804	4 – 600 MCM
D600FNY4	600V - 3∅	100°F	24 VDC	1250	1260	722	2 – 400 MCM
D750FRY4	480V - 3∅	100°F	24 VDC	1250	1260	1128	3 – 400 MCM
D750FPY4	208V - 3∅	100°F	24 VDC	1250	1260	2255	5 – 600 MCM
D750FJY4	240V - 3∅	100°F	24 VDC	1250	1260	2602	5 – 750 MCM
D750FNY4	600V - 3∅	100°F	24 VDC	1250	1260	902	3 – 300 MCM
D1000FRY4	480V - 3∅	100°F	24 VDC	1250	1260	1504	4 – 400 MCM
D1000FPY4	208V - 3∅	100°F	24 VDC	1250	1260	3470	7 –750 MCM
D1000FJY4	240V - 3∅	100°F	24 VDC	1250	1260	3007	7 – 500 MCM
D1000FNY4	600V - 3∅	100°F	24 VDC	1250	1260	1203	3 – 500 MCM
D1250FRY4	480V - 3∅	100°F	24 VDC	1250	1260	1876	4 – 600 MCM
D1250F*Y4	380V - 3∅	100°F	24 VDC	1250	1260	2374	5 – 600 MCM
D1250FNY4	600V - 3∅	100°F	24 VDC	1250	1260	1504	4 – 400 MCM
D1300FRY4	480V - 3∅	100°F	24 VDC	1250	1260	1955	5 – 500 MCM
D1300F*Y4	380V - 3∅	100°F	24 VDC	1250	1260	2469	5 – 750 MCM
D1300FNY4	600V - 3∅	100°F	24 VDC	1250	1260	1564	3 – 750 MCM
D1500FRY4	480V - 3∅	100°F	24 VDC	1250	1260	2255	5 – 600 MCM
D1500F*Y4	380V - 3∅	100°F	24 VDC	1250	1260	2849	7 – 500 MCM
D1500FNY4	600V - 3∅	100°F	24 VDC	1250	1260	1804	4 – 600 MCM
D1600FRY4	480V - 3∅	100°F	24 VDC	1250	1260	2406	6 – 500 MCM
D1600F*Y4	380V - 3∅	100°F	24 VDC	1250	1260	3039	6 – 750 MCM
D1600FNY4	600V - 3∅	100°F	24 VDC	1250	1260	1925	4 – 750 MCM
D1750FRY4	480V - 3∅	100°F	24 VDC	1250	1260	2631	5 – 750 MCM
D1750F*Y4	380V - 3∅	100°F	24 VDC	1250	1260	3324	7 – 600 MCM
D1750FNY4	600V - 3∅	100°F	24 VDC	1250	1260	2105	4 – 750 MCM
D2000FRY4	480V - 3∅	104°F	24 VDC	1250	1260	3007	7 – 500 MCM
D2000F*Y4	380V - 3∅	104°F	24 VDC	1250	1260	3798	8 – 600 MCM
D2000FNY4	600V - 3∅	104°F	24 VDC	1250	1260	2406	6 – 500 MCM

Nissan Motors NL15 to NL25

Model Nissan Motors	Voltage - Phase	Ambient Rating in °F	Nominal Voltage	CCA Lead Acid	CCA NiCad	FLA	Recommended Wire Qty / Size Stranded Copper
NL15FRN4	480V - 3∅	124°F	12 VDC	370	387	23	1 – 14 AWG
NL15FPN4	208V - 3∅	124°F	12 VDC	370	387	52	1 – 8 AWG
NL15FJN4	240V - 3∅	124°F	12 VDC	370	387	45	1 – 8 AWG
NL15FNN4	600V - 3∅	124°F	12 VDC	370	387	18	1 – 14 AWG
NL15FGN4	240V - 1∅	124°F	12 VDC	370	387	63	1 – 6 AWG
NL15FDN4	240V - 1∅	124°F	12 VDC	370	387	63	1 – 6 AWG
NL20FRN4	480V - 3∅	122°F	12 VDC	370	387	30	1 – 12 AWG
NL20FPN4	208V - 3∅	122°F	12 VDC	370	387	69	1 – 6 AWG
NL20FJN4	240V - 3∅	122°F	12 VDC	370	387	60	1 – 6 AWG
NL20FNN4	600V - 3∅	122°F	12 VDC	370	387	24	1 – 14 AWG
NL20FGN4	240V - 1∅	122°F	12 VDC	370	387	83	1 – 4 AWG
NL20FDN4	240V - 1∅	122°F	12 VDC	370	387	83	1 – 4 AWG
NL25FRN4	480V - 3∅	120°F	12 VDC	370	387	38	1 – 10 AWG
NL25FPN4	208V - 3∅	120°F	12 VDC	370	387	87	1 – 4 AWG
NL25FJN4	240V - 3∅	120°F	12 VDC	370	387	75	1 – 6 AWG
NL25FNN4	600V - 3∅	120°F	12 VDC	370	387	30	1 – 12 AWG
NL25FGN4	240V - 1∅	120°F	12 VDC	370	387	104	1 – 3 AWG
NL25FDN4	240V - 1∅	120°F	12 VDC	370	387	104	1 – 3 AWG

General Motors NL20 to NL130

Model General Motors	Voltage - Phase	Ambient Rating in °F	Nominal Voltage	CCA Lead Acid	CCA NiCad	FLA	Recommended Wire Qty / Size Stranded Copper
NL20FRG4	480V - 3∅	125°F	12 VDC	370	387	30	1 – 12 AWG
NL20FPG4	208V - 3∅	125°F	12 VDC	370	387	70	1 – 6 AWG
NL20FJG4	240V - 3∅	125°F	12 VDC	370	387	60	1 – 6 AWG
NL20FGG4	600V - 3∅	125°F	12 VDC	370	387	24	1 – 14 AWG
NL20FGG4	240V - 1∅	125°F	12 VDC	370	387	83	1 – 4 AWG
NL20FDG4	240V - 1∅	125°F	12 VDC	370	387	83	1 – 4 AWG
NL25FRG4	480V - 3∅	122°F	12 VDC	370	387	38	1 – 10 AWG
NL25FPG4	208V - 3∅	122°F	12 VDC	370	387	87	1 – 4 AWG
NL25FJG4	240V - 3∅	122°F	12 VDC	370	387	75	1 – 6 AWG
NL25FGG4	600V - 3∅	122°F	12 VDC	370	387	30	1 – 12 AWG
NL25FGG4	240V - 1∅	122°F	12 VDC	370	387	104	1 – 3 AWG
NL25FDG4	240V - 1∅	122°F	12 VDC	370	387	104	1 – 3 AWG
NL30FRG4	480V - 3∅	118°F	12 VDC	370	387	45	1 – 8 AWG
NL30FPG4	208V - 3∅	118°F	12 VDC	370	387	104	1 – 3 AWG
NL30FJG4	240V - 3∅	118°F	12 VDC	370	387	90	1 – 4 AWG
NL30FGG4	600V - 3∅	118°F	12 VDC	370	387	36	1 – 10 AWG
NL30FGG4	240V - 1∅	118°F	12 VDC	370	387	125	1 – 2 AWG
NL30FDG4	240V - 1∅	118°F	12 VDC	370	387	125	1 – 2 AWG
NL35FRG4	480V - 3∅	118°F	12 VDC	370	387	53	1 – 8 AWG
NL35FPG4	208V - 3∅	118°F	12 VDC	370	387	121	1 – 2 AWG
NL35FJG4	240V - 3∅	118°F	12 VDC	370	387	105	1 – 3 AWG
NL35FGG4	600V - 3∅	118°F	12 VDC	370	387	42	1 – 8 AWG
NL35FGG4	240V - 1∅	118°F	12 VDC	370	387	146	1 – 1 AWG
NL35FDG4	240V - 1∅	118°F	12 VDC	370	387	146	1 – 1 AWG
NL40FRG4	480V - 3∅	118°F	12 VDC	370	387	60	1 – 6 AWG
NL40FPG4	208V - 3∅	118°F	12 VDC	370	387	139	1 – 1 AWG
NL40FJG4	240V - 3∅	118°F	12 VDC	370	387	120	1 – 2 AWG
NL40FGG4	600V - 3∅	118°F	12 VDC	370	387	48	1 – 8 AWG
NL40FGG4	240V - 1∅	118°F	12 VDC	370	387	167	1 – 1/0 AWG
NL40FDG4	240V - 1∅	118°F	12 VDC	370	387	167	1 – 1/0 AWG
NL45FRG4	480V - 3∅	105°F	12 VDC	625	688	68	1 – 6 AWG
NL45FPG4	208V - 3∅	105°F	12 VDC	625	688	156	1 – 1/0 AWG
NL45FJG4	240V - 3∅	105°F	12 VDC	625	688	135	1 – 1 AWG
NL45FGG4	600V - 3∅	105°F	12 VDC	625	688	54	1 – 8 AWG
NL45FGG4	240V - 1∅	105°F	12 VDC	625	688	188	1 – 2/0 AWG
NL45FDG4	240V - 1∅	105°F	12 VDC	625	688	188	1 – 2/0 AWG
NL50FRG4	480V - 3∅	105°F	12 VDC	625	688	75	1 – 6 AWG
NL50FPG4	208V - 3∅	105°F	12 VDC	625	688	173	1 – 2/0 AWG
NL50FJG4	240V - 3∅	105°F	12 VDC	625	688	150	1 – 1/0 AWG
NL50FGG4	600V - 3∅	105°F	12 VDC	625	688	60	1 – 6 AWG

NL50FGG4	240V - 1∅	105°F	12 VDC	625	688	208	1 – 3/0 AWG
NL50FDG4	240V - 1∅	105°F	12 VDC	625	688	208	1 – 3/0 AWG
NL55FRG4	480V - 3∅	105°F	12 VDC	625	688	83	1 – 4 AWG
NL55FPG4	208V - 3∅	105°F	12 VDC	625	688	191	1 – 2/0 AWG
NL55FJG4	240V - 3∅	105°F	12 VDC	625	688	165	1 – 1/0 AWG
NL55FGG4	600V - 3∅	105°F	12 VDC	625	688	66	1 – 6 AWG
NL55FGG4	240V - 1∅	105°F	12 VDC	625	688	229	1 – 4/0 AWG
NL55FDG4	240V - 1∅	105°F	12 VDC	625	688	229	1 – 4/0 AWG
NL60FRG4	480V - 3∅	100°F	12 VDC	625	688	90	1 – 4 AWG
NL60FPG4	208V - 3∅	100°F	12 VDC	625	688	208	1 – 3/0 AWG
NL60FJG4	240V - 3∅	100°F	12 VDC	625	688	180	1 – 2/0 AWG
NL60FGG4	600V - 3∅	100°F	12 VDC	625	688	72	1 – 6 AWG
NL60FGG4	240V - 1∅	100°F	12 VDC	625	688	250	1 – 4/0 AWG
NL60FDG4	240V - 1∅	100°F	12 VDC	625	688	250	1 – 4/0 AWG
NL80FRG4	480V - 3∅	130°F	12 VDC	1000	1072	120	1 – 2 AWG
NL80FPG4	208V - 3∅	130°F	12 VDC	1000	1072	178	1 – 2/0 AWG
NL80FJG4	240V - 3∅	130°F	12 VDC	1000	1072	241	1 – 4/0 AWG
NL80FGG4	600V - 3∅	130°F	12 VDC	1000	1072	96	1 – 3 AWG
NL80FGG4	240V - 1∅	130°F	12 VDC	1000	1072	333	1 – 350 MCM
NL80FDG4	240V - 1∅	130°F	12 VDC	1000	1072	333	1 – 350 MCM
NL100FRG4	480V - 3∅	118°F	12 VDC	1000	1072	150	1 – 1 AWG
NL100FPG4	208V - 3∅	118°F	12 VDC	1000	1072	347	1 – 350 MCM
NL100FJG4	240V - 3∅	118°F	12 VDC	1000	1072	301	1 – 300 MCM
NL100FGG4	600V - 3∅	118°F	12 VDC	1000	1072	120	1 – 2 AWG
NL100FGG4	240V - 1∅	118°F	12 VDC	1000	1072	417	2 – 4/0 AWG
NL100FDG4	240V - 1∅	118°F	12 VDC	1000	1072	417	2 – 4/0 AWG
NL120FRG4	480V - 3∅	120°F	12 VDC	1000	1072	180	1 – 2/0 AWG
NL120FPG4	208V - 3∅	120°F	12 VDC	1000	1072	416	2 – 4/0 AWG
NL120FJG4	240V - 3∅	120°F	12 VDC	1000	1072	361	1 – 400 MCM
NL120FGG4	600V - 3∅	120°F	12 VDC	1000	1072	144	1 – 1 AWG
NL120FGG4	240V - 1∅	120°F	12 VDC	1000	1072	500	2 – 4/0 AWG
NL120FDG4	240V - 1∅	120°F	12 VDC	1000	1072	500	2 – 4/0 AWG
NL125FRG4	480V - 3∅	120°F	12 VDC	1000	1072	188	1 – 2/0 AWG
NL125FPG4	208V - 3∅	120°F	12 VDC	1000	1072	434	2 – 4/0 AWG
NL125FJG4	240V - 3∅	120°F	12 VDC	1000	1072	376	1 – 400 MCM
NL125FGG4	600V - 3∅	120°F	12 VDC	1000	1072	150	1 – 1/0 AWG
NL125FGG4	240V - 1∅	120°F	12 VDC	1000	1072	521	2 – 250 MCM
NL125FDG4	240V - 1∅	120°F	12 VDC	1000	1072	521	2 – 250 MCM
NL130FRG4	480V - 3∅	117°F	12 VDC	1000	1072	195	1 – 3/0 AWG
NL130FPG4	208V - 3∅	117°F	12 VDC	1000	1072	451	2 – 4/0 AWG
NL130FJG4	240V - 3∅	117°F	12 VDC	1000	1072	391	1 – 500 MCM
NL130FGG4	600V - 3∅	117°F	12 VDC	1000	1072	156	1 – 1/0 AWG
NL130FGG4	240V - 1∅	117°F	12 VDC	1000	1072	541	2 – 250 MCM
NL130FDG4	240V - 1∅	117°F	12 VDC	1000	1072	541	2 – 250 MCM

Cummins NL125-800

Model Cummins Motors	Voltage - Phase	Ambient Rating in °F	Nominal Voltage	CCA Lead Acid	CCA NiCad	FLA	Recommended Wire Qty / Size Stranded Copper
NL125FRZ4	480V-3Ø	110°	24VDC	1000	1072	188	1 – 2/0 AWG
NL125FPZ4	208V-3Ø	110°	24VDC	1000	1072	434	2 – 3/0 AWG
NL125FJZ4	240V-3Ø	110°	24VDC	1000	1072	375	1 – 400 MCM
NL125FNZ4	600V-3Ø	110°	24VDC	1000	1072	150	1– 1AWG
NL125FGZ4	240V-1Ø	110°	24VDC	1000	1072	521	2 – 250 MCM
NL125FDZ4	240V-1Ø	110°	24VDC	1000	1072	521	2 – 250 MCM
NL150FRZ4	480V-3Ø	110°	24VDC	1000	1072	226	1– 4/0 AWG
NL150FPZ4	208V-3Ø	110°	24VDC	1000	1072	520	2 – 250 MCM
NL150FJZ4	240V-3Ø	110°	24VDC	1000	1072	451	2 – 4/0 AWG
NL150FNZ4	600V-3Ø	110°	24VDC	1000	1072	180	1-2/0 AWG
NL150FGZ4	240V-1Ø	110°	24VDC	1000	1072	625	2 – 300 MCM
NL150FDZ4	240V-1Ø	110°	24VDC	1000	1072	625	2 – 300 MCM
NL180FRZ4	480V-3Ø	100°	24VDC	1000	1072	271	1 – 250 MCM
NL180FPZ4	208V-3Ø	100°	24VDC	1000	1072	625	2 – 300 MCM
NL180FJZ4	240V-3Ø	100°	24VDC	1000	1072	541	2 – 250 MCM
NL180FNZ4	600V-3Ø	100°	24VDC	1000	1072	217	1– 3/0 AWG
NL180FGZ4	240V-1Ø	100°	24VDC	1000	1072	750	2 – 400 MCM
NL180FDZ4	240V-1Ø	100°	24VDC	1000	1072	750	2 – 400 MCM
NL215FRZ4	480V-3Ø	100°	24VDC	1000	1072	308	1 – 300 MCM
NL215FPZ4	208V-3Ø	100°	24VDC	1000	1072	711	2 – 400 MCM
NL215FJZ4	240V-3Ø	100°	24VDC	1000	1072	616	2 – 300 MCM
NL215FNZ4	600V-3Ø	100°	24VDC	1000	1072	247	1– 4/0 AWG
NL215FGZ4	240V-1Ø	100°	24VDC	1000	1072	896	3 – 300 MCM
NL215FDZ4	240V-1Ø	100°	24VDC	1000	1072	896	3 – 300 MCM
NL250FRZ4	480V-3Ø	100°	24VDC	1000	1072	376	1 – 400 MCM
NL250FPZ4	208V-3Ø	100°	24VDC	1000	1072	867	3 – 250 MCM
NL250FJZ4	240V-3Ø	100°	24VDC	1000	1072	752	2 – 400 MCM
NL250FNZ4	600V-3Ø	100°	24VDC	1000	1072	301	1 – 300 MCM
NL250FGZ4	240V-1Ø	100°	24VDC	1000	1072	1042	3 – 350 MCM
NL250FDZ4	240V-1Ø	100°	24VDC	1000	1072	1042	3 – 350 MCM
NL280FRZ4	480V-3Ø	100°	24VDC	1000	1072	421	2 – 4/0 AWG
NL280FPZ4	208V-3Ø	100°	24VDC	1000	1072	972	3 – 350 MCM
NL280FJZ4	240V-3Ø	100°	24VDC	1000	1072	842	3 – 250 MCM
NL280FNZ4	600V-3Ø	100°	24VDC	1000	1072	337	1 – 350 MCM
NL280FGZ4	240V-1Ø	100°	24VDC	1000	1072	1167	4 – 300 MCM
NL325FRZ4	480V-3Ø	100°	24VDC	1150	1072	489	2 – 4/0 AWG
NL325FPZ4	208V-3Ø	100°	24VDC	1150	1072	1128	4 – 250 MCM
NL325FJZ4	240V-3Ø	100°	24VDC	1150	1072	977	3 – 350 MCM
NL325FNZ4	600V-3Ø	100°	24VDC	1150	1072	391	1 – 500 MCM
NL325FGZ4	240V-1Ø	100°	24VDC	1150	1072	1354	3 – 600 MCM
NL350FRZ4	480V-3Ø	100°	24VDC	1150	1072	526	2 – 250 MCM

NL350FPZ4	208V-3Ø	100°	24VDC	1150	1072	1214	3 – 500 MCM
NL350FJZ4	240V-3Ø	100°	24VDC	1150	1072	1052	4 – 250 MCM
NL350FNZ4	600V-3Ø	100°	24VDC	1150	1072	421	2 – 4/0 AWG
NL350FGZ4	240V-1Ø	100°	24VDC	1150	1072	1458	3 – 750 MCM
NL400FRZ4	480V-3Ø	100°	24VDC	1800	1800	601	2 – 300 MCM
NL400FPZ4	208V-3Ø	100°	24VDC	1800	1800	1388	3 – 600 MCM
NL400FJZ4	240V-3Ø	100°	24VDC	1800	1800	1203	3 – 500 MCM
NL400FNZ4	600V-3Ø	100°	24VDC	1800	1800	481	2 – 4/0 AWG
NL400FGZ4	240V-1Ø	100°	24VDC	1800	1800	1667	4 – 500 MCM
NL500FRZ4	480V-3Ø	100°	24VDC	1800	1800	752	2 – 400 MCM
NL500FPZ4	208V-3Ø	100°	24VDC	1800	1800	1735	4 – 600 MCM
NL500FJZ4	240V-3Ø	100°	24VDC	1800	1800	1504	3 – 750 MCM
NL500FNZ4	600V-3Ø	100°	24VDC	1800	1800	601	2 – 300 MCM
NL500FGZ4	240V-1Ø	100°	24VDC	1800	1800	2063	4 – 750 MCM
NL600FRZ4	480V-3Ø	110°	24VDC	1800	1800	902	3 – 300 MCM
NL600FPZ4	208V-3Ø	110°	24VDC	1800	1800	2082	4 – 750 MCM
NL600FJZ4	240V-3Ø	110°	24VDC	1800	1800	1804	4 – 600 MCM
NL600FNZ4	600V-3Ø	110°	24VDC	1800	1800	722	2 – 400 MCM
NL650FRZ4	480V-3Ø	110°	24VDC	1800	1800	977	3 – 350 MCM
NL650FPZ4	208V-3Ø	110°	24VDC	1800	1800	2255	5 – 600 MCM
NL650FJZ4	240V-3Ø	110°	24VDC	1800	1800	1955	4 – 750 MCM
NL650FNZ4	600V-3Ø	110°	24VDC	1800	1800	782	2 – 500 MCM
NL700FRZ4	480V-3Ø	110°	24VDC	1800	1800	1052	4 – 250 MCM
NL700FPZ4	208V-3Ø	110°	24VDC	1800	1800	2429	5 – 750 MCM
NL700FJZ4	240V-3Ø	110°	24VDC	1800	1800	2105	4 – 750 MCM
NL700FNZ4	600V-3Ø	110°	24VDC	1800	1800	842	2 – 500 MCM
NL750FRZ4	480V-3Ø	110°	24VDC	1800	1800	1128	4 – 250 MCM
NL750FPZ4	208V-3Ø	110°	24VDC	1800	1800	2602	5 – 750 MCM
NL750FJZ4	240V-3Ø	110°	24VDC	1800	1800	2255	5 – 750 MCM
NL750FNZ4	600V-3Ø	110°	24VDC	1800	1800	902	3 – 300 MCM
NL800FRZ4	480V-3Ø	110°	24VDC	1800	1800	1202	3 – 500 MCM
NL800FPZ4	208V-3Ø	110°	24VDC	1800	1800	2776	6 – 600 MCM
NL800FJZ4	240V-3Ø	110°	24VDC	1800	1800	2406	5 – 750 MCM
NL800FNZ4	600V-3Ø	110°	24VDC	1800	1800	962	3 – 350 MCM

Cummins D220-D2000

Model Cummins Diesel	Voltage - Phase	Ambient Rating in °F	Nominal Voltage	CCA Lead Acid	CCA NiCad	FLA	Recommended Wire Qty / Size Stranded Copper
D220FRZ4	480V - 3∅	100°F	24 VDC	1150	1260	331	1 – 350 MCM
D220FPZ4	208V - 3∅	100°F	24 VDC	1150	1260	763	2 – 400 MCM
D220FJZ4	240V - 3∅	100°F	24 VDC	1150	1260	662	2 – 350 MCM
D220FNZ4	600V - 3∅	100°F	24 VDC	1150	1260	265	1 – 250 MCM
D220FGZ4	240V - 1∅	100°F	24 VDC	1150	1260	917	3 – 300 MCM
D220FDZ4	240V - 1∅	100°F	24 VDC	1150	1260	917	3 – 300 MCM
D250FRZ4	480V - 3∅	100°F	24 VDC	1150	1260	376	1 – 400 MCM
D250FPZ4	208V - 3∅	100°F	24 VDC	1150	1260	867	3 – 250 MCM
D250FJZ4	240V - 3∅	100°F	24 VDC	1150	1260	752	2 – 400 MCM
D250FNZ4	600V - 3∅	100°F	24 VDC	1150	1260	301	1 – 300 MCM
D250FGZ4	240V - 1∅	100°F	24 VDC	1150	1260	1042	3 – 350 MCM
D250FDZ4	240V - 1∅	100°F	24 VDC	1150	1260	1042	3 – 350 MCM
D275FRZ4	480V - 3∅	100°F	24 VDC	1150	1260	413	2 – 4/0 AWG
D275FPZ4	208V - 3∅	100°F	24 VDC	1150	1260	954	3 – 300 MCM
D275FJZ4	240V - 3∅	100°F	24 VDC	1150	1260	827	3 – 250 MCM
D275FNZ4	600V - 3∅	100°F	24 VDC	1150	1260	331	1 – 350 MCM
D275FGZ4	240V - 1∅	100°F	24 VDC	1150	1260	1146	4 – 250 MCM
D275FDZ4	240V - 1∅	100°F	24 VDC	1150	1260	1146	4 – 250 MCM
D300FRZ4	480V - 3∅	100°F	24 VDC	1150	1260	451	2 – 4/0 AWG
D300FPZ4	208V - 3∅	100°F	24 VDC	1150	1260	1041	3 – 350 MCM
D300FJZ4	240V - 3∅	100°F	24 VDC	1150	1260	902	3 – 300 MCM
D300FNZ4	600V - 3∅	100°F	24 VDC	1150	1260	361	1 – 400 MCM
D300FGZ4	240V - 1∅	100°F	24 VDC	1150	1260	1250	3 – 500 MCM
D300FDZ4	240V - 1∅	100°F	24 VDC	1150	1260	1250	3 – 500 MCM
D350FRZ4	480V - 3∅	100°F	24 VDC	1150	1260	526	2 – 250 MCM
D350FPZ4	208V - 3∅	100°F	24 VDC	1150	1260	1214	3 – 500 MCM
D350FJZ4	240V - 3∅	100°F	24 VDC	1150	1260	1052	4 – 250 MCM
D350FNZ4	600V - 3∅	100°F	24 VDC	1150	1260	421	2 – 4/0 AWG
D350FGZ4	240V - 1∅	100°F	24 VDC	1150	1260	1458	3 – 750 MCM
D350FDZ4	240V - 1∅	100°F	24 VDC	1150	1260	1458	3 – 750 MCM
D400FRZ4	480V - 3∅	100°F	24 VDC	1150	1260	601	2 – 300 MCM
D400FPZ4	208V - 3∅	100°F	24 VDC	1150	1260	1388	3 – 600 MCM
D400FJZ4	240V - 3∅	100°F	24 VDC	1150	1260	1203	3 – 500 MCM
D400FNZ4	600V - 3∅	100°F	24 VDC	1150	1260	481	2 – 4/0 AWG
D400FGZ4	240V - 1∅	100°F	24 VDC	1150	1260	1667	4 – 500 MCM
D400FDZ4	240V - 1∅	100°F	24 VDC	1150	1260	1667	3 – 500 MCM
D450FRZ4	480V - 3∅	100°F	24 VDC	1150	1260	677	2 – 350 MCM
D450FPZ4	208V - 3∅	100°F	24 VDC	1150	1260	1561	3 – 750 MCM
D450FJZ4	240V - 3∅	100°F	24 VDC	1150	1260	1353	3 – 600 MCM

D450FNZ4	600V - 3∅	100°F	24 VDC	1150	1260	541	2 – 250 MCM
D450FGZ4	240V - 1∅	100°F	24 VDC	1150	1260	1813	4 – 600 MCM
D500FRZ4	480V - 3∅	100°F	24 VDC	1150	1260	752	2 – 400 MCM
D500FPZ4	208V - 3∅	100°F	24 VDC	1150	1260	1735	4 – 600 MCM
D500FJZ4	240V - 3∅	100°F	24 VDC	1150	1260	1504	3 – 750 MCM
D500FNZ4	600V - 3∅	100°F	24 VDC	1150	1260	601	2 – 300 MCM
D600FRZ4	480V - 3∅	100°F	24 VDC	1150	1260	902	3 – 300 MCM
D600RPZ4	208V - 3∅	100°F	24 VDC	1150	1260	2082	4 – 750 MCM
D600FJZ4	240V - 3∅	100°F	24 VDC	1150	1260	1804	4 – 600 MCM
D600FNZ4	600V - 3∅	100°F	24 VDC	1150	1260	722	2 – 400 MCM
D750FRZ4	480V - 3∅	118°F	24 VDC	1150	1260	1128	4 – 250 MCM
D750FPZ4	208V - 3∅	100°F	24 VDC	1150	1260	2602	5 – 750 MCM
D750FJZ4	240V - 3∅	100°F	24 VDC	1150	1260	2255	5 – 600 MCM
D750FNZ4	600V - 3∅	100°F	24 VDC	1150	1260	902	3 – 300 MCM
D800FRZ4	480V - 3∅	100°F	24 VDC	1150	1260	1203	3 – 500 MCM
D800RPZ4	208V - 3∅	100°F	24 VDC	1150	1260	2776	5 – 600 MCM
D800FJZ4	240V - 3∅	100°F	24 VDC	1150	1260	2406	5 – 750 MCM
D800FNZ4	600V - 3∅	100°F	24 VDC	1150	1260	962	3 – 350 MCM
D900FRZ4	480V - 3∅	120°F	24 VDC	1150	1260	1353	3 – 600 MCM
D900FPZ4	208V - 3∅	120°F	24 VDC	1150	1260	3123	6 – 750 MCM
D900FJZ4	240V - 3∅	120°F	24 VDC	1150	1260	2706	6 – 600 MCM
D900FNZ4	600V - 3∅	120°F	24 VDC	1150	1260	1083	4 – 250 MCM
D1000FRZ4	480V - 3∅	100°F	24 VDC	1150	1260	1504	3 – 750 MCM
D1000FPZ4	208V - 3∅	100°F	24 VDC	1150	1260	3470	7 – 750 MCM
D1000FJZ4	240V - 3∅	100°F	24 VDC	1150	1260	3007	6 – 750 MCM
D1000FNZ4	600V - 3∅	100°F	24 VDC	1150	1260	1203	3 – 500 MCM
D1100FRZ4	480V - 3∅	110°F	24 VDC	1150	1260	1654	4 – 500 MCM
D1100FPZ4	208V - 3∅	110°F	24 VDC	1150	1260	3817	9 – 500 MCM
D1100FJZ4	240V - 3∅	110°F	24 VDC	1150	1260	3308	7 – 600 MCM
D1100FNZ4	600V - 3∅	110°F	24 VDC	1150	1260	1323	3 – 600 MCM
D1250FRZ4	480V - 3∅	100°F	24 VDC	1150	1260	1879	4 – 600 MCM
D1250FNZ4	600V - 3∅	100°F	24 VDC	1150	1260	1504	3 – 750 MCM
D1500FRZ4	480V - 3∅	100°F	24 VDC	1150	1260	2255	5 – 600 MCM
D1500FNZ4	600V - 3∅	100°F	24 VDC	1150	1260	1804	4 – 600 MCM
D2000FRZ4	480V - 3∅	100°F	24 VDC	1150	1260	3007	6 – 750 MCM
D2000FNZ4	600V - 3∅	100°F	24 VDC	1150	1260	2406	5 – 750 MCM

John Deere D20 to D400

Model John Deere	Voltage - Phase	Ambient Rating in °F	Nominal Voltage	CCA Lead Acid	CCA NiCad	FLA	Recommended Wire Qty / Size Stranded Copper
D25FRJ4	480V - 3∅	134°F	12 VDC	700	668	38	1 – 10 AWG
D25FPJ4	208V - 3∅	134°F	12 VDC	700	668	87	1 – 4 AWG
D25FJJ4	240V - 3∅	134°F	12 VDC	700	668	75	1 – 6 AWG
D25FNJ4	600V - 3∅	134°F	12 VDC	700	668	30	1 – 12 AWG
D25FGJ4	240V - 1∅	134°F	12 VDC	700	668	104	1 – 3 AWG
D25FDJ4	240V - 1∅	134°F	12 VDC	700	668	104	1 – 3 AWG
D30FRJ4	480V - 3∅	134°F	12 VDC	700	668	45	1 – 8 AWG
D30FPJ4	208V - 3∅	134°F	12 VDC	700	668	104	1 – 3 AWG
D30FJJ4	240V - 3∅	134°F	12 VDC	700	668	90	1 – 4 AWG
D30FNJ4	600V - 3∅	134°F	12 VDC	700	668	36	1 – 10 AWG
D30FGJ4	240V - 1∅	134°F	12 VDC	700	668	125	1 – 2 AWG
D30FDJ4	240V - 1∅	134°F	12 VDC	700	668	125	1 – 2 AWG
D35FRJ4	480V - 3∅	132°F	12 VDC	700	668	53	1 – 8 AWG
D35FPJ4	208V - 3∅	132°F	12 VDC	700	668	121	1 – 2 AWG
D35FJJ4	240V - 3∅	132°F	12 VDC	700	668	105	1 – 3 AWG
D35FNJ4	600V - 3∅	132°F	12 VDC	700	668	42	1 – 8 AWG
D35FGJ4	240V - 1∅	132°F	12 VDC	700	668	146	1 – 1 AWG
D35FDJ4	240V - 1∅	132°F	12 VDC	700	668	146	1 – 1 AWG
D40FRJ4	480V - 3∅	131°F	12 VDC	700	668	60	1 – 6 AWG
D40FPJ4	208V - 3∅	131°F	12 VDC	700	668	139	1 – 1 AWG
D40FJJ4	240V - 3∅	131°F	12 VDC	700	668	120	1 – 2 AWG
D40FNJ4	600V - 3∅	131°F	12 VDC	700	668	48	1 – 8 AWG
D40FGJ4	240V - 1∅	131°F	12 VDC	700	668	167	1 – 1/0 AWG
D40FDJ4	240V - 1∅	131°F	12 VDC	700	668	167	1 – 1/0 AWG
D50FRJ4	480V - 3∅	129°F	12 VDC	700	668	75	1 – 6 AWG
D50FPJ4	208V - 3∅	129°F	12 VDC	700	668	173	1 – 2/0 AWG
D50FJJ4	240V - 3∅	129°F	12 VDC	700	668	150	1 – 1 AWG
D50FNJ4	600V - 3∅	129°F	12 VDC	700	668	60	1 – 6 AWG
D50FGJ4	240V - 1∅	129°F	12 VDC	700	668	208	1 – 3/0 AWG
D50FDJ4	240V - 1∅	129°F	12 VDC	700	668	208	1 – 3/0 AWG
D60FRJ4	480V - 3∅	128°F	12 VDC	700	668	90	1 – 4 AWG
D60FPJ4	208V - 3∅	128°F	12 VDC	700	668	208	1 – 3/0 AWG
D60FJJ4	240V - 3∅	128°F	12 VDC	700	668	180	1 – 2/0 AWG
D60FNJ4	600V - 3∅	128°F	12 VDC	700	668	72	1 – 6 AWG
D60FGJ4	240V - 1∅	128°F	12 VDC	700	668	250	1 – 4/0 AWG
D60FDJ4	240V - 1∅	128°F	12 VDC	700	668	250	1 – 4/0 AWG
D75FRJ4	480V - 3∅	121°F	12 VDC	700	668	113	1 – 2 AWG
D75FPJ4	208V - 3∅	121°F	12 VDC	700	668	260	1 – 4/0 AWG
D75FJJ4	240V - 3∅	121°F	12 VDC	700	668	226	1 – 4/0 AWG

D75FNJ4	600V - 3∅	121°F	12 VDC	700	668	90	1 – 4 AWG
D75FGJ4	240V - 1∅	121°F	12 VDC	700	668	313	1 – 300 MCM
D75FDJ4	240V - 1∅	121°F	12 VDC	700	668	313	1 – 300 MCM
D80FRJ4	480V - 3∅	121°F	12 VDC	700	668	120	1 – 2 AWG
D80FPJ4	208V - 3∅	121°F	12 VDC	700	668	278	1 – 250 MCM
D80FJJ4	240V - 3∅	121°F	12 VDC	700	668	248	1 – 4/0 AWG
D80FNJ4	600V - 3∅	121°F	12 VDC	700	668	96	1 – 3 AWG
D80FGJ4	240V - 1∅	121°F	12 VDC	700	668	333	1 – 350 MCM
D80FDJ4	240V - 1∅	121°F	12 VDC	700	668	333	1 – 350 MCM
D85FRJ4	480V - 3∅	124°F	12 VDC	1000	1072	128	1 – 2 AWG
D85FPJ4	208V - 3∅	124°F	12 VDC	1000	1072	295	1 – 300 MCM
D85FJJ4	240V - 3∅	124°F	12 VDC	1000	1072	256	1 – 4/0 AWG
D85FNJ4	600V - 3∅	124°F	12 VDC	1000	1072	102	1 – 3 AWG
D85FGJ4	240V - 1∅	124°F	12 VDC	1000	1072	354	1 – 400 MCM
D85FDJ4	240V - 1∅	124°F	12 VDC	1000	1072	354	1 – 400 MCM
D95FRJ4	480V - 3∅	122°F	12 VDC	1000	1072	143	1 – 1 AWG
D95FPJ4	208V - 3∅	122°F	12 VDC	1000	1072	330	1 – 350 MCM
D95FJJ4	240V - 3∅	122°F	12 VDC	1000	1072	286	1 – 250 MCM
D95FNJ4	600V - 3∅	122°F	12 VDC	1000	1072	114	1 – 2 AWG
D95FGJ4	240V - 1∅	122°F	12 VDC	1000	1072	395	1 – 500 MCM
D95FDJ4	240V - 1∅	122°F	12 VDC	1000	1072	395	1 – 500 MCM
D105FRJ4	480V - 3∅	120°F	12 VDC	1000	1072	158	1 – 1/0 AWG
D105FPJ4	208V - 3∅	120°F	12 VDC	1000	1072	364	1 – 400 MCM
D105FJJ4	240V - 3∅	120°F	12 VDC	1000	1072	316	1 – 300 MCM
D105FNJ4	600V - 3∅	120°F	12 VDC	1000	1072	126	1 – 2 AWG
D105FGJ4	240V - 1∅	120°F	12 VDC	1000	1072	438	2 – 4/0 AWG
D105FDJ4	240V - 1∅	120°F	12 VDC	1000	1072	438	2 – 4/0 AWG
D125FRJ4	480V - 3∅	120°F	12 VDC	1000	1072	188	1 – 2/0 AWG
D125FPJ4	208V - 3∅	120°F	12 VDC	1000	1072	434	2 – 4/0 AWG
D125FJJ4	240V - 3∅	120°F	12 VDC	1000	1072	376	1 – 400 MCM
D125FNJ4	600V - 3∅	120°F	12 VDC	1000	1072	150	1 – 1 AWG
D125FGJ4	240V - 1∅	120°F	12 VDC	1000	1072	521	2 – 4/0 AWG
D125FDJ4	240V - 1∅	120°F	12 VDC	1000	1072	521	2 – 4/0 AWG
D135FRJ4	480V - 3∅	126°F	12 VDC	1000	1072	203	1 – 3/0 AWG
D135FPJ4	208V - 3∅	126°F	12 VDC	1000	1072	468	2 – 4/0 AWG
D135FJJ4	240V - 3∅	126°F	12 VDC	1000	1072	406	2 – 4/0 AWG
D135FNJ4	600V - 3∅	126°F	12 VDC	1000	1072	122	1 – 2 AWG
D135FGJ4	240V - 1∅	126°F	12 VDC	1000	1072	563	2 – 250 MCM
D135FDJ4	240V - 1∅	126°F	12 VDC	1000	1072	563	2 – 250 MCM
D150FRJ4	480V - 3∅	120°F	12 VDC	1000	1072	226	1 – 4/0 AWG
D150FPJ4	208V - 3∅	120°F	12 VDC	1000	1072	520	2 – 4/0 AWG
D150FJJ4	240V - 3∅	120°F	12 VDC	1000	1072	451	2 – 4/0 AWG
D150FNJ4	600V - 3∅	120°F	12 VDC	1000	1072	180	1 – 2/0 AWG
D150FGJ4	240V - 1∅	120°F	12 VDC	1000	1072	625	2 – 300 MCM
D150FDJ4	240V - 1∅	120°F	12 VDC	1000	1072	625	2 – 300 MCM

D180FRJ4	480V - 3∅	118°F	12 VDC	1000	1072	271	1 – 250 MCM
D180FPJ4	208V - 3∅	118°F	12 VDC	1000	1072	625	2 – 300 MCM
D180FJJ4	240V - 3∅	118°F	12 VDC	1000	1072	541	2 – 250 MCM
D180FNJ4	600V - 3∅	118°F	12 VDC	1000	1072	217	1 – 3/0 AWG
D180FGJ4	240V - 1∅	118°F	12 VDC	1000	1072	750	2 – 400 MCM
D180FDJ4	240V - 1∅	118°F	12 VDC	1000	1072	750	2 – 400 MCM
D190FRJ4	480V - 3∅	117°F	12 VDC	1000	1072	286	1 – 250 MCM
D190FPJ4	208V - 3∅	117°F	12 VDC	1000	1072	659	2 – 350 MCM
D190FJJ4	240V - 3∅	117°F	12 VDC	1000	1072	571	2 – 250 MCM
D190FNJ4	600V - 3∅	117°F	12 VDC	1000	1072	229	1 – 4/0 AWG
D190FGJ4	240V - 1∅	117°F	12 VDC	1000	1072	792	2 – 500 MCM
D190FDJ4	240V - 1∅	117°F	12 VDC	1000	1072	792	2 – 500 MCM
D200FRJ4	480V - 3∅	118°F	12 VDC	1000	1072	301	1 – 300 MCM
D200FPJ4	208V - 3∅	118°F	12 VDC	1000	1072	694	2 – 350 MCM
D200FJJ4	240V - 3∅	118°F	12 VDC	1000	1072	601	2 – 300 MCM
D200FNJ4	600V - 3∅	118°F	12 VDC	1000	1072	241	1 – 4/0 AWG
D200FGJ4	240V - 1∅	118°F	12 VDC	1000	1072	833	2 – 500 MCM
D200FDJ4	240V - 1∅	118°F	12 VDC	1000	1072	833	2 – 500 MCM
D220FRJ4	480V - 3∅	118°F	12 VDC	1000	1072	331	1 – 350 MCM
D220FPJ4	208V - 3∅	118°F	12 VDC	1000	1072	763	2 – 500 MCM
D220FJJ4	240V - 3∅	118°F	12 VDC	1000	1072	662	2 – 350 MCM
D220FNJ4	600V - 3∅	118°F	12 VDC	1000	1072	265	1 – 250 MCM
D220FGJ4	240V - 1∅	118°F	12 VDC	1000	1072	858	2 – 500 MCM
D220FDJ4	240V - 1∅	118°F	12 VDC	1000	1072	917	2 – 600 MCM
D230FRJ4	480V - 3∅	118°F	12 VDC	1000	1072	346	1 – 350 MCM
D230FPJ4	208V - 3∅	118°F	12 VDC	1000	1072	798	2 – 500 MCM
D230FJJ4	240V - 3∅	118°F	12 VDC	1000	1072	691	2 – 350 MCM
D230FNJ4	600V - 3∅	118°F	12 VDC	1000	1072	277	1 – 250 MCM
D250FRJ4	480V - 3∅	118°F	24 VDC	1150	1260	376	1 – 400 MCM
D250FPJ4	208V - 3∅	118°F	24 VDC	1150	1260	867	3 – 250 MCM
D250FJJ4	240V - 3∅	118°F	24 VDC	1150	1260	752	2 – 400 MCM
D250FNJ4	600V - 3∅	118°F	24 VDC	1150	1260	301	1 – 300 MCM
D250FGJ4	240V - 1∅	118°F	24 VDC	1150	1260	1042	3 – 350 MCM
D275FRJ4	480V - 3∅	118°F	24 VDC	1150	1260	413	2 – 4/0 AWG
D275FPJ4	208V - 3∅	118°F	24 VDC	1150	1260	954	3 – 300 MCM
D275FJJ4	240V - 3∅	118°F	24 VDC	1150	1260	827	2 – 500 MCM
D275FNJ4	600V - 3∅	118°F	24 VDC	1150	1260	331	1 – 350 MCM
D275FGJ4	240V - 1∅	118°F	24 VDC	1150	1260	1146	4 – 250 MCM
D300FRJ4	480V - 3∅	118°F	24 VDC	1150	1260	451	2 – 4/0 AWG
D300FPJ4	208V - 3∅	118°F	24 VDC	1150	1260	1041	3 – 350 MCM
D300FJJ4	240V - 3∅	118°F	24 VDC	1150	1260	902	3 – 300 MCM
D300FNJ4	600V - 3∅	118°F	24 VDC	1150	1260	361	1 – 400 MCM
D300FGJ4	240V - 1∅	118°F	24 VDC	1150	1260	1250	3 – 500 MCM
D350FRJ4	480V - 3∅	120°F	24 VDC	1150	1260	562	2 – 250 MCM
D350FPJ4	208V - 3∅	120°F	24 VDC	1150	1260	1214	3 – 500 MCM

D350FJJ4	240V - 3∅	120°F	24 VDC	1150	1260	1052	3 – 350 MCM
D350FNJ4	600V - 3∅	120°F	24 VDC	1150	1260	421	2 – 4/0 AWG
D350FGJ4	240V - 1∅	120°F	24 VDC	1150	1260	1458	3 – 750 MCM
D375FRJ4	480V - 3∅	120°F	24 VDC	1150	1260	564	2 – 250 MCM
D375FPJ4	208V - 3∅	120°F	24 VDC	1150	1260	1301	3 – 600 MCM
D375FJJ4	240V - 3∅	120°F	24 VDC	1150	1260	1128	4 – 250 MCM
D375FNJ4	600V - 3∅	120°F	24 VDC	1150	1260	451	2 – 4/0 AWG
D375FGJ4	240V - 1∅	120°F	24 VDC	1150	1260	1563	3 – 750 MCM
D400FRJ4	480V - 3∅	118°F	24 VDC	1150	1260	601	2 – 300 MCM
D400FPJ4	208V - 3∅	118°F	24 VDC	1150	1260	1388	3 – 600 MCM
D400FJJ4	240V - 3∅	118°F	24 VDC	1150	1260	1203	3 – 500 MCM
D400FNJ4	600V - 3∅	118°F	24 VDC	1150	1260	481	2 – 4/0 AWG
D400FGJ4	240V - 1∅	118°F	24 VDC	1150	1260	1667	4 – 500 MCM
D415FRJ4	480V - 3∅	118°F	24 VDC	1150	1260	624	2 – 300 MCM
D415FPJ4	208V - 3∅	118°F	24 VDC	1150	1260	1440	3 – 750 MCM
D415FJJ4	240V - 3∅	118°F	24 VDC	1150	1260	1248	3 – 500 MCM
D415FNJ4	600V - 3∅	118°F	24 VDC	1150	1260	499	2 – 4/0 AWG
D415FGJ4	240V - 1∅	118°F	24 VDC	1150	1260	1749	4 – 600 MCM

Volvo D225 to D500

Model Nissan Motors	Voltage - Phase	Ambient Rating in °F	Nominal Voltage	CCA Lead Acid	CCA NiCad	FLA	Recommended Wire Qty / Size Stranded Copper
D225FRV4	480V - 3∅	122°F	24 VDC	1000	1072	338	1– 350 MCM
D225FPV4	208V - 3∅	122°F	24 VDC	1000	1072	781	3– 500 MCM
D225FJV4	240V - 3∅	122°F	24 VDC	1000	1072	677	2– 350 MCM
D225FNV4	600V - 3∅	122°F	24 VDC	1000	1072	271	1– 250 MCM
D225FGV4	240V - 1∅	122°F	24 VDC	1000	1072	937	3– 350 MCM
D225FDV4	240V - 1∅	122°F	24 VDC	1000	1072	937	3– 350 MCM
D250FRV4	480V - 3∅	122°F	24 VDC	1000	1072	375	1– 400 MCM
D250FPV4	208V - 3∅	122°F	24 VDC	1000	1072	867	3 – 250 MCM
D250FJV4	240V - 3∅	122°F	24 VDC	1000	1072	752	2 – 400 MCM
D250FNV4	600V - 3∅	122°F	24 VDC	1000	1072	301	1 – 300 MCM
D250FGV4	240V - 1∅	122°F	24 VDC	1000	1072	1125	3 – 350 MCM
D300FRV4	480V - 3∅	131°F	24 VDC	1155	1260	451	2 – 4/0 AWG
D300FPV4	208V - 3∅	131°F	24 VDC	1155	1260	1041	3– 350 MCM
D300FJV4	240V - 3∅	131°F	24 VDC	1155	1260	902	3– 300 MCM
D300FNV4	600V - 3∅	131°F	24 VDC	1155	1260	361	1– 400 MCM
D300FGV4	240V - 1∅	131°F	24 VDC	1155	1260	1250	3– 500 MCM
D350FRV4	480V - 3∅	131°F	24 VDC	1155	1260	526	2– 250 MCM
D350FPV4	208V - 3∅	131°F	24 VDC	1155	1260	1214	3 – 500 MCM
D350FJV4	240V - 3∅	131°F	24 VDC	1155	1260	1052	4 – 250 MCM
D350FNV4	600V - 3∅	131°F	24 VDC	1155	1260	421	2 – 4/0 AWG
D350FGV4	240V - 1∅	131°F	24 VDC	1155	1260	1458	3 – 750 MCM
D400FRV4	480V - 3∅	131°F	24 VDC	1155	1260	601	2– 300 MCM
D400FPV4	208V - 3∅	131°F	24 VDC	1155	1260	1388	3 – 600 MCM
D400FJV4	240V - 3∅	131°F	24 VDC	1155	1260	1203	3 – 500 MCM
D400FNV4	600V - 3∅	131°F	24 VDC	1155	1260	481	2 – 4/0 AWG
D400FGV4	240V - 1∅	131°F	24 VDC	1155	1260	1667	4 – 500 MCM
D450FRV4	480V - 3∅	114°F	24 VDC	1155	1260	667	2– 350 MCM
D450FPV4	208V - 3∅	114°F	24 VDC	1155	1260	1561	3 – 750 MCM
D450FJV4	240V - 3∅	114°F	24 VDC	1155	1260	1353	3 – 600 MCM
D450FNV4	600V - 3∅	114°F	24 VDC	1155	1260	541	2 – 250 MCM
D450FGV4	240V - 1∅	114°F	24 VDC	1155	1260	1875	4 – 600 MCM
D500FRV4	480V - 3∅	122°F	24 VDC	1155	1260	752	2– 400 MCM
D500FPV4	208V - 3∅	122°F	24 VDC	1155	1260	1735	4 – 600 MCM
D500FJV4	240V - 3∅	122°F	24 VDC	1155	1260	1504	3 – 750 MCM
D500FNV4	600V - 3∅	122°F	24 VDC	1155	1260	601	2– 300 MCM
D500FGV4	240V - 1∅	122°F	24 VDC	1155	1260	2083	4 – 750 MCM

Detroit Diesel D450 to D2000

Model Detroit Diesel	Voltage - Phase	Ambient Rating in °F	Nominal Voltage	CCA Lead Acid	CCA NiCad	FLA	Recommended Wire Qty / Size Stranded Copper
D450FRX4	480V - 3∅	100°F	24 VDC	1150	1260	677	2 – 350 MCM
D450FPX4	208V - 3∅	100°F	24 VDC	1150	1260	1561	3 – 750 MCM
D450FJX4	240V - 3∅	100°F	24 VDC	1150	1260	1353	3 – 600 MCM
D450FNX4	600V - 3∅	100°F	24 VDC	1150	1260	541	2 – 250 MCM
D450FGX4	240V - 1∅	100°F	24 VDC	1150	1260	1875	4 – 600 MCM
D500FRX4	480V - 3∅	100°F	24 VDC	1150	1260	752	2 – 400 MCM
D500FPX4	208V - 3∅	100°F	24 VDC	1150	1260	1735	4 – 600 MCM
D500FJX4	240V - 3∅	100°F	24 VDC	1150	1260	1504	4 – 400 MCM
D500FNX4	600V - 3∅	100°F	24 VDC	1150	1260	601	2 – 300 MCM
D600FRX4	480V - 3∅	100°F	24 VDC	1150	1260	902	3 – 300 MCM
D600FPX4	208V - 3∅	100°F	24 VDC	1150	1260	2082	4 – 750 MCM
D600FJX4	240V - 3∅	100°F	24 VDC	1150	1260	1804	4 – 600 MCM
D600FNX4	600V - 3∅	100°F	24 VDC	1150	1260	722	2 – 400 MCM
D750FRX4	480V - 3∅	100°F	24 VDC	1150	1260	1128	4 – 250 MCM
D750FPX4	208V - 3∅	100°F	24 VDC	1150	1260	2602	5 – 750 MCM
D750FJX4	240V - 3∅	100°F	24 VDC	1150	1260	2255	5 – 600 MCM
D750FNX4	600V - 3∅	100°F	24 VDC	1150	1260	902	3 – 300 MCM
D800FRX4	480V - 3∅	100°F	24 VDC	1150	1260	1203	3 – 500 MCM
D800FPX4	208V - 3∅	100°F	24 VDC	1150	1260	2776	5 – 750 MCM
D800FJX4	240V - 3∅	100°F	24 VDC	1150	1260	2406	5 – 750 MCM
D800FNX4	600V - 3∅	100°F	24 VDC	1150	1260	962	3 – 350 MCM
D900FRX4	480V - 3∅	100°F	24 VDC	1150	1260	1353	3 – 600 MCM
D900FPX4	208V - 3∅	100°F	24 VDC	1150	1260	3123	6 – 750 MCM
D900FJX4	240V - 3∅	100°F	24 VDC	1150	1260	2706	6 – 600 MCM
D900FNX4	600V - 3∅	100°F	24 VDC	1150	1260	1083	4 –250 MCM
D1000FRX4	480V - 3∅	100°F	24 VDC	1150	1260	1504	3 – 750 MCM
D1000FPX4	208V - 3∅	100°F	24 VDC	1150	1260	3470	7 – 750 MCM
D1000FJX4	240V - 3∅	100°F	24 VDC	1150	1260	3007	6 – 750 MCM
D1000FNX4	600V - 3∅	100°F	24 VDC	1150	1260	1203	3 – 500 MCM
D1150FRX4	480V - 3∅	100°F	24 VDC	1150	1260	1729	4 – 600 MCM
D1150FPX4	208V - 3∅	100°F	24 VDC	1150	1260	3990	8 – 750 MCM
D1150FJX4	240V - 3∅	100°F	24 VDC	1150	1260	3458	8 – 750 MCM
D1150FNX4	600V - 3∅	100°F	24 VDC	1150	1260	1383	3 – 600 MCM
D1600FRX4	480V - 3∅	108°F	24 VDC	1150	1260	2406	6 – 500 MCM
D1600FRX4	600V - 3∅	108°F	24 VDC	1150	1260	1925	6 – 350 MCM
D1750FRX4	480V - 3∅	100°F	24 VDC	1150	1260	2631	5 – 750 MCM
D1750FRX4	600V - 3∅	100°F	24 VDC	1150	1260	2105	4 – 750 MCM
D2000FRX4	480V - 3∅	100°F	24 VDC	1150	1260	3007	7 – 750 MCM
D2000FRX4	600V - 3∅	100°F	24 VDC	1150	1260	2406	6 – 500 MCM

Contact Katolight At

1-800-325-5450

To Locate Your Local Distributor

Or Service Agent

Operating Instructions

MANUAL START:

If the Engine-Generator Set is located in a closed space, start the ventilation fan or open the doors and windows to allow an ample supply of air to the unit.

A. Place the generator circuit breaker in the **OPEN** position.
B. Put the engine control in the **MANUAL / RUN** position.
   NOTE: If the engine does not start, check the Operator's Manual.

MANUAL:

C. Check the unit frequency. Speed should be 3 to 5 % of rated speed (60 Hz). If not, refer to Operator's Manual for governor adjustment.
D. Check the unit AC voltage. (If the AC voltage is not reading correct, refer to the Operator's Manual for the proper procedure to adjust the voltage regulator to the rated voltage.)
E. Check engine parameters, via gauges or by scrolling through the microprocessor control panel for proper readings.
F. Close the generator circuit breaker.

The Engine-Generator Set is now ready to supply power to the load and will continue to supply power until the operator shuts down the set or an engine failure occurs.

MANUAL SHUTDOWN:

A. Open the generator circuit breaker, move handle to the **DOWN** position.
B. Put the engine control in the **OFF** position.
   NOTE: Following daily service or other maintenance on generator set, place the engine control to desired operating mode. When desired operating mode is automatic, reset the generator circuit breaker by placing its handle in the **UP** position.

EMERGENCY STOP PUSH BUTTON: (OPTIONAL EQUIPMENT)

In case of emergency the operator may shutdown the generator set by pushing the red mushroom head button. If equipped, this is located in the lower right corner of the control panel. This will stop and lock out the generator set. The push button's red light will also turn on to indicate the generator was stopped, by initiating the emergency stop button. The red push button must be pulled out to reset the generator set and turn off the red indicating light. Place the engine control to the "OFF" position to reset the engine control before restarting the unit. Reset the main line circuit breaker before returning the generator set to "AUTOMATIC" operation.

AUTOMATIC OPERATIONS

For automatic operation the Engine-Generator Set will be controlled by the automatic transfer switch and the automatic engine control.

A. For detailed operations of the transfer switch, refer to the Operations Manual supplied with the transfer switch.

B. For detailed operations of the automatic engine control, refer to Operations Manual, supplied with the Genset.

I. Standby State

(a) Leave the engine control in the “AUTO” position.
(b) Leave the generator set circuit breaker in the “ON” position.

II. Power Fails

(a) The remote start contact in the transfer switch will close and complete a circuit to the automatic start control terminals marked “E” in the control panel.
(b) This will cause the engine to start and come up to speed and voltage, then transfer to the load to the Engine-Generator Set.

III. Power Returns

(a) The load transfers back to normal power after a time delay (if provided).
(b) The remote start contact in the transfer switch will open after a time delay (if provided), and the unit will shutdown and be ready for the next power failure.

Rev. 20030530

KATOLIGHT CORPORATION

WEEKLY CHECK LIST EXPLANATION

Rev. 20030530

Date:	- fill in the date of the inspection.
Ambient Temp:	- record outside or room air temperature.
Oil Level:	- record the level from the oil dipstick and the amount of oil added to engine if it was needed.
Water Level:	- record the level of the water in radiator and the amount of water added to radiator if it was needed.
Heaters:	- feel the block heater inlet and outlet hoses to make sure they are warm.
Belts:	- check belts to make sure they are tight. You cannot hear loose belts over the unit noise. **Make sure the engine control is in the "OFF" position**.
Battery Charger:	- visual inspection of charger to verify operation. If equipped with a dial meter verify charge rate. If equipped with LEDs verify LEDs lit. **Red** LED only indicates battery discharged, charging at "Bulk" rate. **Red & Green** LED only indicates charger charging at "Absorption" rate. **Green** LED only indicates "Float" rate, battery is fully charged.
Battery Levels & Cables:	- make sure batteries are full of water, cables are tight and battery posts are clean.
Leaks: (Oil-Water-Fuel)	- check all hoses and connections for dripping, tighten hose clamps if needed.
Amps:	- when the unit is running with load, record the amp reading.
Volts:	- when the unit is running with load, record the volt reading.
Frequency:	- when the unit is running with load, record the hertz reading.
Oil Pressure:	- when the unit is running with load, record the oil pressure.
Water Temperature:	- when the unit is running with load, record the water temperature reading once stabilized.
BC Volts:	- battery charger DC voltage reading.
RTM:	- running time meter total should be recorded before each test - this will allow you to determine if the unit has run since the last exercise.
ATS:	- automatic transfer switch should be filled in as "OK" if the test performed a load transfer properly.
Mechanic:	- should be initialed by the person doing the test.

WEEKLY CHECK LIST

Date:	Ambient Temp:	Oil Level:	Water Level:	Heaters:	Belts:	Battery Charger:	Battery Levels & Cables:	Leaks – Oil, water or fuel	Amp:	Volts:	Freq:	Oil Pressure:	Water Temp:	BC Amp:	RTM:	ATS:	Mechanic:	Comments:

KATOLIGHT MODEL NUMBER DEFINITIONS

D	Diesel
60	60 kW
F	Brushless
G	1 Phase, 120/240 Volt
J	John Deere Engine
4	1800 RPM
CEP	Includes Ag. Accessory Package

L	LP Gas
50	50 kW
F	Brushless
P	3 Phase, 120/208 Volt
G	GM Engine
4	1800 RPM

N	Natural Gas
55	55 kW
F	Brushless
D	1 Phase, 120/240 Volt
N	Nissan Engine
4	1800 RPM

SED	Diesel
75	75 kW
F	Brushless
G	1 Phase, 120/240 Volt
J	John Deere Engine
4	1800 RPM

Model prefix denotes fuel:

* Optional – Will operate on Natural gas or Propane.

D – denotes diesel
G – denotes gasoline
L – denotes propane*
N – denotes natural gas*
SED – denotes enclosed "SP" diesel
SD – denotes OPU "SP" diesel
SENL – denotes enclosed "SP" natural gas or propane
SNL – denotes OPU "SP" natural gas or propane

First number group denotes kW capacity of generator.
First letter denotes type of generator:

F – Brushless rectifier type, direct connected, revolving field.
H – Revolving armature, self excited.
I – Induction generator.
X – Static excited, revolving field.
Y – Cranking excited, direct connected.

Second letter denotes revolving armature voltage and phase:

A – 115 volt, 1 phase, 2 wire
B – 277/480 volt, 1 phase
C – 240/480 volt, 1 phase (High Zig Zag)
D – 120/240 volt, 1 phase, 4 wire (Dedicated)
F – 115/230 volt, 1 phase, 3 wire (Revolving field type.)
G – 120/240 volt, 1 phase, 12 wire (Zig Zag) (Double Delta)
H – 1386/2400 volt, 3 phase (WYE)
J – 120/240 volt, 3 phase (High Delta)
K – 1905/3300 volt, 3 phase (WYE)
L – 7967/13,800 volt, 3 phase (WYE)
M – 3811/6600 volt, 3 phase (WYE)
N – 346/600 volt, 3 phase (WYE)
P – 120/208 volt, 3 phase (PAR WYE)
R – 277/480 volt, 3 phase (SER WYE)
S – 2400/4160 volt, 3 phase (WYE)
U – 4147/7200 volt, 3 phase (WYE)
T – 6351/11,000 volt, 3 phase (WYE)
Q – 2400 volt, 3 phase (Delta)
* – Multi-voltage, multi-phase, switchable

Third letter denotes engine manufacturer:

A – Catepiller
B – Briggs & Stratton
C – Continental / Chrysler
D – Allis Chalmers / Daewoo
E – Waukesha
F – Ford
G – General Motors
H – Hercules
I – Isuzu
J – John Deere
K – Deutz
L – Lister
M – Minneapolis Moline
N – Lombardini / Nissan
P – Perkins
Q – Two bearing generator, independent
R – Roiline / Rolls Royce
T – Hatz
U – Murphy
V – Volvo
W – Wisconsin
X – Detroit
Y – Mitsubishi
Z – Cummins

Last number/letter denotes number of poles, rpm and frequency:

3 – 2 poles, 3600 rpm, 60 cycle
4 – 4 poles, 1800 rpm, 60 cycle
5 – 4 poles, 1500 rpm, 50 cycle
6 – 6 poles, 1200 rpm, 60 cycle
7 – 2 poles, 3000 rpm, 50 cycle
I – 400 cycle

KLMN/2005

Katolight

POWER PLANTS

INSTRUCTION AND PARTS BOOK

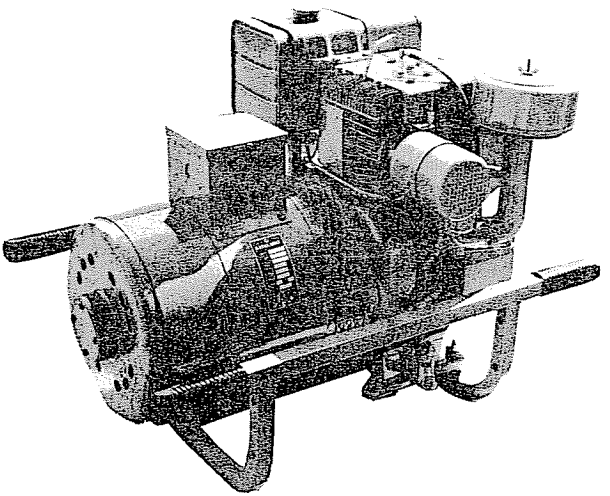

9 models

from 750 to 5000 watts

Katolight Corporation

MANKATO, MINNESOTA

YOUR KATOLIGHT POWER PLANT

Guarenteed Insurance Against Power Failure

All Katolight Power Plants are manufactured to high standards of precision. Parts that require machining, grinding, or milling are made to even closer tolerances than required for good engineering, because we insist on a superior product.

Every phase of the manufacturing process is in the hands of skilled, specially trained electrical and mechanical workmen who build both high quality and long life into Katolight products.

Every model is precision engineered for maximum compactness and light weight to give a minimum of maintenance combined with the finest performance at lowest initial and operating costs.

Katolight generators are driven by such nationally known commercial engines as Briggs and Stratton, Wisconsin, Continental, Waukesha, General Motors, Cummins, and International, as well as other makes which have authorized service centers throughout the United States. These engines are familiar to the average mechanic making it unnecessary to depend upon the factory for maintenance and service.

All plants are shipped complete, ready for operation, with the addition of gasoline, oil and water in case of liquid-cooled units.

Controls are available on most models for emergency or standby units, which will start the plant automatically when the normal supply of electricity is interrupted. When the normal supply is restored, the plant stops automatically.

You are assured of AC power anywhere, anytime with a Katolight. power plant, manufactured in a size to meet every individual requirement from 750 watts to 400 KW, standby or continuous duty, portable or stationary installed.

INSTRUCTIONS FOR ORDERING REPAIR PARTS

For parts or service, contact the distrbutor from whom you purchased this equipment or refer directly to Katolight Corporation.

To avoid errors or delay in filling your parts order, please furnish all information requested.

REFER TO THE NAMEPLATE ON YOUR PLANT.

1. Always give the MODEL & TYPE NO. and SERIAL NO.

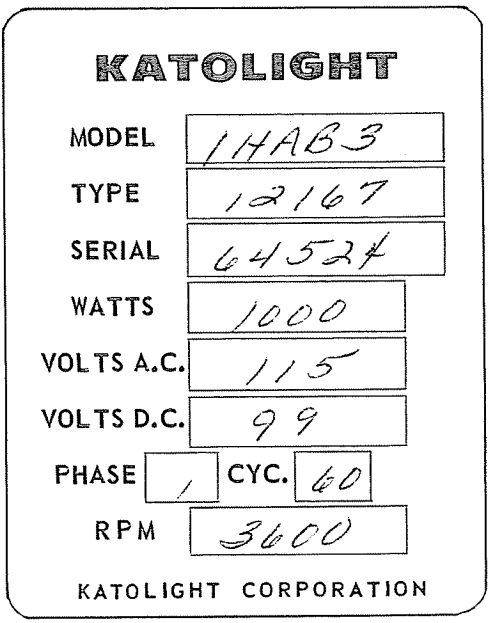

For handy reference, copy YOUR Plant nameplate information in the spaces above.

2. Do not order by reference number or group number, use part number and description.

3. Give the part number, description and quantity needed of each item. If an old part cannot be identified, return the part prepaid to your distributor or Katolight Corp. Print your name and address plainly on the package. Write a letter to the same address stating the reason for returning the part.

4. State definite shipping instructions.

Any claim for loss or damage to your unit in transit should be filed promptly against the transportation company making the delivery. Shipments are complete unless the packing list indicates items are back ordered.

"Prices are purposely omitted from this Parts Catalog due to the confusion resulting from fluctuating costs, import duties, sales taxes, exchange rates, etc.

For Current parts prices, consult your Katolight Distributor or Katolight Corporation, Mankato, Minnesota.

CONTENTS

	Page
Instructions For Ordering	1
Models Covered	3
Warranty	3
Initial Precautions After Receiving Power Plant	4
Cooling Air Supply	4
Precautions Prior To Starting	4
Starting Procedure	5
Dissassembly And Assembly Procedures	6
Reassembling Engine To Generator	8
Bearing Replacement	8
Commutator And Slip Ring Care And Maintenance	9
Replacing Brushes	11
Brush Holder Adjustments	12
Voltage Regulation	13
Insulation Breakdown And Moisture Accumulation	13
Checking Generator Frequency	13
Restoring Residual Magnetism	14
Portable Service	15
Adapting Plant To Standby Service	15
Determining Emergency Load	15
Parts Drawing	16
Parts Lists	17
Two And Three Wire Systems	18
Three Wire Generators	18
Two Wire Generators	19
Methods Of Transfer	20
Balancing Load On Three Wire System	23
Trouble Shooting Procedures	25
Assembling Carrying Handle	33

This booklet pertains to 5 types of 1800 RPM and 4 types of 3600 RPM manual rope started air-cooled Katolight power plants from 750 watts to 5000 watts. Generators are of the revolving armature type, direct connected to the engine. The chart below indicates the 9 types and characteristics of each. Read both generator and engine instructions thoroughly prior to placing the unit in operation. When ordering spare or replacement parts, compare the nameplate data of your power plant with the corresponding parts list in this book.

Wattage Output	Voltage	Number of Lead Wires	RPM	Model Number	Type Number	Engine Make
750	115	2	1800	075HAB4	8069	B. & S.
1500	115	2	1800	1.5HAB4	8125	B. & S.
2500	115	2	1800	2.5HAB4	9339	B. & S.
3500	115/230	4	1800	3.5HFW4	5873	Wisc.
5000	115/230	4	1800	5MFW4E	9478	Wisc.
1000	115	2	3600	1HAB3-V	8343	B. & S.
2000	115	2	3600	2HAB3	9549	B. & S.
3000	115	2	3600	3HAB3	5475	B. & S.
4000	115/230	4	3600	4HFB3	9693	B. & S.

Electric start, automatic transfer types are available in the same sizes listed above, as well as belt driven models, but are not covered in this book. A complete line of accessories are available for all models. Information and prices of power plants up to 400 Kilowatts will be sent on request.

-- WARRANTY --

This generator is warranted to produce its rated output as stamped on the nameplate when installed and operated in accordance with instructions.

It is warranted to be in good condition electrically and mechanically when leaving the factory.

It is warranted against electrical or mechanical defects in workmanship for a period of one year after shipment from the factory. Any parts found to be defective by factory inspectors after return to the factory, transportation charges prepaid, will be replaced or repaired free of charge. This does not include any component part or standard accessory such as meters, engines, relays, etc., made by other manufacturers, as these are subject to the warranties of those manufacturers.

Receiving Power Plant And Initial Precautions

This machine has been carefully tested and packed before leaving the factory. When unpacking, it should be thoroughly inspected to see if damage has occured in transit and to make certain that all parts, accessories, etc., are in proper condition and position. If damage is noted or material missing, notify the transportation company immediately and file a claim.

The windings and other internal components should be protected from damage when unpacking and handling. Under no circumstances should lifting hooks be attached to ventilating holes in the endbells as there is a possibility of damaging the internal parts.

All instructions and drawings contained in both this booklet and the engine manuel should be studied thoroughly prior to putting the unit in operation. Before any type of maintenance or adjustment is performed the machine should be shut down.

PROVIDE FUSE PROTECTION: Generator should be protected by fuses, fustats or fusetrons in accordance with the National Electrical Code and pertinent state codes. Engine governor should be checked periodically and adjusted according to engine manuel.

OBSERVE NAMEPLATE RATING: To avoid overheating and insulation breakdown, care should be taken that generator is not overloaded. Although generators are conservatively rated, the load should not exceed nameplate rating except for short periods of time.

Cooling Air Supply

The successful operation of any electrical machine depends largely on its being installed under conditions that are favorable to its economical and efficient operation. A plentiful supply of clean, cool, fresh, dry air is necessary, with sufficient space on all sides of the machine to permit air to circulate freely. The power plant should be protected from moisture, escaping steam, dripping pipes, oil, acid, alcohol, chlorine or other corrosive gasses. Make certain that the ventilation holes in the generator frame are clean and free from foreign matter. Both engine and generator will heat if these precausions are not followed.

Precautions Prior To Starting

1. Before starting, remove the spark plug wires, ground them to the frame and rotate the armature to see that it turns freely.
2. Check brushes to see that they are seated firmly on the commutator and slip rings and that they move freely in their holders.
3. Check the engine in accordance with the engine manuel.
4. Make certain that generator and engine are securely bolted to base assembly.
5. Add fuel in tank - oil in reservior.

Starting Proceedure

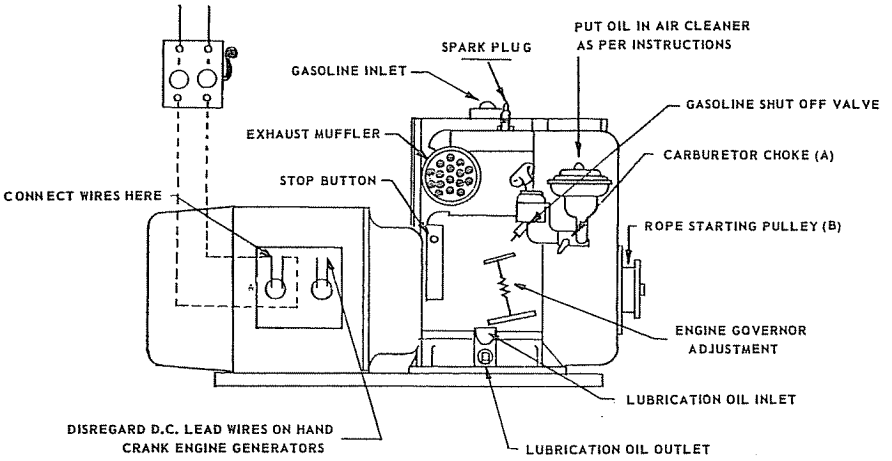

Open the gasoline shut off valve in fuel filter by turning the valve in a counter clockwise direction. Completely close the carburetor choke (A) by moving the choke adjustment lever in a clockwise direction. Wind the starter rope around the starter pulley (B) and pull the rope with a quick, steady pull to spin the fly wheel with choke fully closed to prime the engine. Then choke about 1/8 turn and repeat the operation. As the engine warms up, gradually open the choke valve.

TO STOP

To stop the plant equipped with a Briggs & Stratton engine, bring the ground strap into contact with the spark plug.

To stop the plant equipped with a Wisconsin engine, press the red button located on the breaker box.

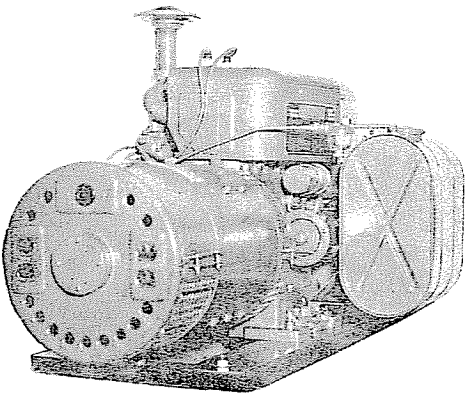

Wisconsin engine driven models are equipped with an engine starter. See engine manufacturers operating instructions.

Dissassembly And Assembly Procedures

Three types of engine generator adapters are used in assembling the generator to the engine.

However, when disassembling, the entire armature assembly can be removed from the commutator end of the generator on all models.

To remove armature (Drawing 1), first disconnect the DC field lead wires, then lift brushes (A) in their holders. Remove the entire endbell (B) and brush ring assembly (C). When removing, tap the endbell lightly outward at inspection holes (D) and the bearing will become free from the bearing race in the endbell and remain on the shaft.

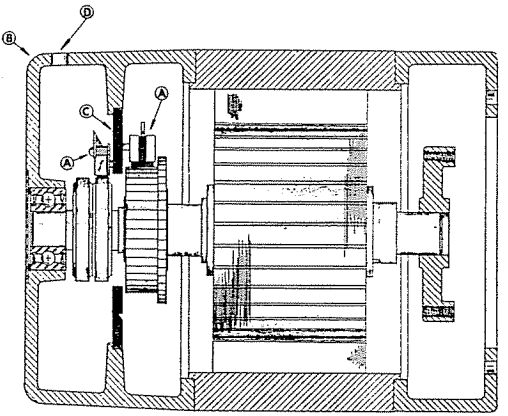

Drawing 1

To remove the armature after the endbell has been removed, simply remove two bolts in the coupling assembly from the generator coupling half (Drawing 2). The fan and engine coupling half will remain on the engine shaft.

This type of coupling fan assembly provides flexibility and improves the operation of the unit and increases bearing life.

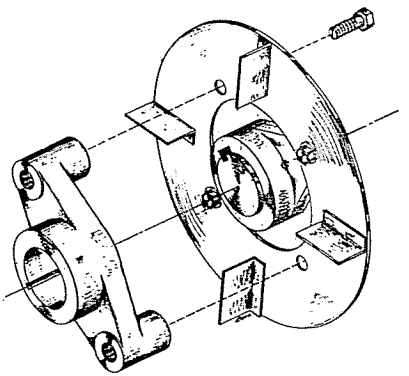

Drawing 2

On models with the adapter types shown in Drawings 3 and 4, the entire generator can be removed from the engine without removing the generator armature.

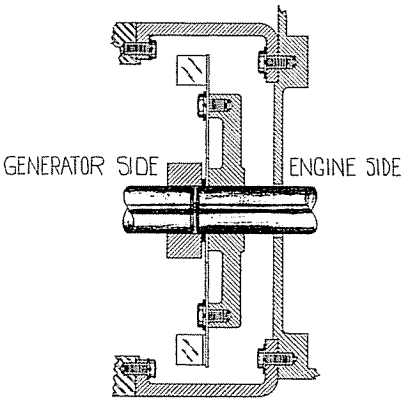

Drawing 3

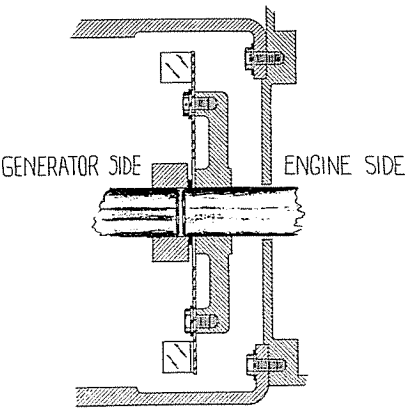

Drawing 4

With the type shown in Drawing 3, remove the bolts on the generator side of the adapter. The adapter will stay on the engine bell housing. Remove the two coupling bolts on the engine side and the fan will stay with the generator coupling half on the generator shaft.

With the type adapter shown in Drawing 4, the generator frame bolts directly to the engine. Remove the housing bolts and the two bolts from the engine coupling half. The fan will remain with the generator assembly.

The type of adapting provisions shown in Drawing 5 is used with all models up to 1000 watts which use the Briggs and Stratton 8FB engine.

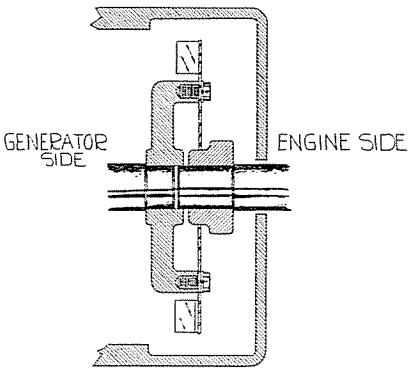

Drawing 5

With these models, the generator frame cannot be removed from the engine until the armature has been removed. To remove armature, remove the two bolts from the generator coupling half, and the fan will stay on the engine shaft. When armature is removed, the generator frame can be removed by removing the bell housing bolts. A puller must be used to remove the engine coupling half from the engine shaft.

Reassembling Engine To Generator

Fit the generator to the engine and replace coupling bolts (A) and frame mounting bolts (D). Align the generator coupling half with the fan by turning the armature. Tighten frame bolts alternately and do not force any parts which may cause the shafts to become bent.

Reseat the brushes on the commutator and slip rings and align properly. Rotate the armature to see that it is working freely. Start the engine and operate briefly before replacing cover bands.

Bearing Replacement

The bearings used in this generator are of the facgory lubricated, grease sealed type and require no regreasing. The average bearing life is approximately 4,000 running hours.

When removing the bearing, pull it straight off the shaft, taking care not to tip the bearing which might scar the shaft.

When fitting the new bearing, make certain that it is concentric with the shaft and tap the bearing onto the shaft with a rubber, fibre or leather hammer.

Make certain that the same spacing washers that are taken out or the equivilent are replaced when refitting the bearing into the bearing race.

Allow from 1/16 to 1/32 inch end clearance. Too much end play will allow the collector rings and commutator to get out of line with the brushes. If there is too little end play, excessive pressure on the bearing will shorten its life.

To determine the end play, measure the depth of the alternator endbell (A) from the machined face (1) to the bearing seat (2). Place a straight edge flat on the machined face and measure the distance between the two points.

Next, measure the distance (B) from the outside edge of the bearing (3) to the machined lip of the alternator frame (4). Place a straight edge firmly against the outer bearing surface and measure with a rule at two opposite points to make certain that endbell depth is 1/16 to 1/32 inch greater to provide endplay. If measurement A (endbell depth) is less than 1/32 inch greater than distance B, remove spacers. If it is more than 1/16 inch, add spacers. The brush holder ring has been removed in order to show bearing race clearly.

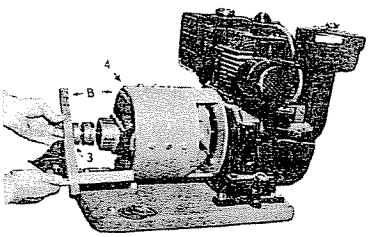

A

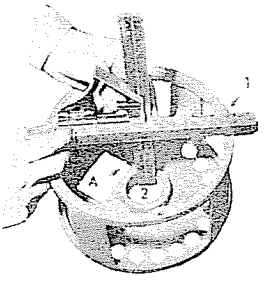

B

Commutator And Slip Ring Care And Maintenance

Very often commutators and slip rings are remachined unneccesarily. Before attempting to remove the armature to remachine and undercut the commutator make certain that all necessary tests have been made to determine any other possible cause of voltage flucuations or other output deviations.

In many instances, replacing brushes and cleaning both brush holders and commutator will remedy DC excitation difficulties. Although some brush sparking may have caused small pits or black spots on the commutator surface there is usually not enough damage to cause poor commutation providing brushes are seated properly, holders cleaned, and commutator surface sanded properly.

When new brushes have been installed and sanded according to instructions, they should then be lifted in their holders and the commutator sanded. This can be done with a wood block covered with 00 sandpaper or with a commutator stone or burnisher. The latter are inexpensive items which can be ordered from the factory.

When resanding the commutator, hold the wood block or stone firmly and apply a small amount of even pressure. If the commutator is wider than the stone or block, move it back and forth vertically with firm even movements. In most cases, these repairs will restore the commutator for normal operation over a long period of time.

If commutator is badly pitted or out of round and it is necessary to remachine it, a competent machinist should be employed and extreme caution taken not to damage the shaft center when removing the armature. The shaft surface and the commutator and slip rings have been machined at the factory according to this shaft center. If it becomes damaged in anyway, and then the commutator or slip rings remachined, the commutator surface will not be concentric with the shaft and sparking and rapid wear of brushes will result when the machine is reassembled and operated. Serious damage to the entire generator can result.

To determine if the shaft center has been damaged, the armature should be placed in a lathe and the shaft checked with a dial indicator as shown at A. The indicator should be placed at the position where the bearing rides or on the outer bearing surface if the bearing is in good repair.

If the shaft has been badly damaged and a new center resulted, use a steady rest to maintain alignment of the shaft surface and redrill a new true center prior to machining the slip rings or commutator.

When the remachining of the commutator or slip rings has been completed, their outer surface should be checked with a dial indicator as shown at B. Tollerance should be kept within 5/1000 of an inch.

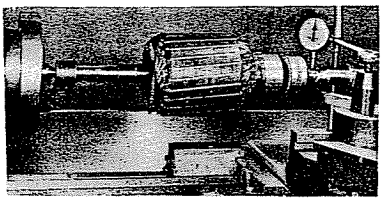

A

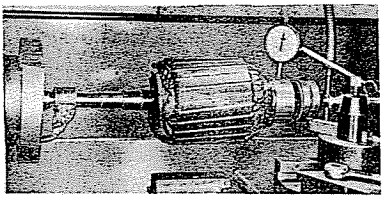

B

If the remachining is accomplished using the damaged center as shown at C, the commutator surface will be eccentric with the bearing and shaft. When put in operation, the brushes will be forced to move in their holders to conform to the eccentricity of the commutator as shown at D (shown slightly exagerated). The inner circle represents the shaft and the outer circle the commutator or slip rings.

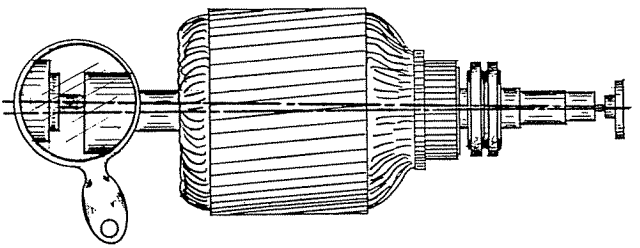

Drawing C

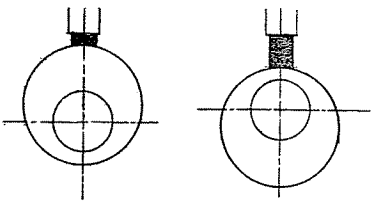

Drawing D

When the remachining has been accomplished, it is necessary to undercut the mica segments.

When a square undercutting tool is used it should be slightly wider than the mica and well centered so that a mica fin as shown at E is not left.

Rough edges as shown at F should be removed by beveling as shown at G.

When a "V" undercutting tool or a three cornered file is used, the tool should be slightly wider than the mica so as to get the bevel required as shown at H.

If the undercutting is not deep enough to make a bevel on the bars as shown at I, mica fins will be left.

The tool should be well centered on the mica in order to avoid the mica fin as shown at J.

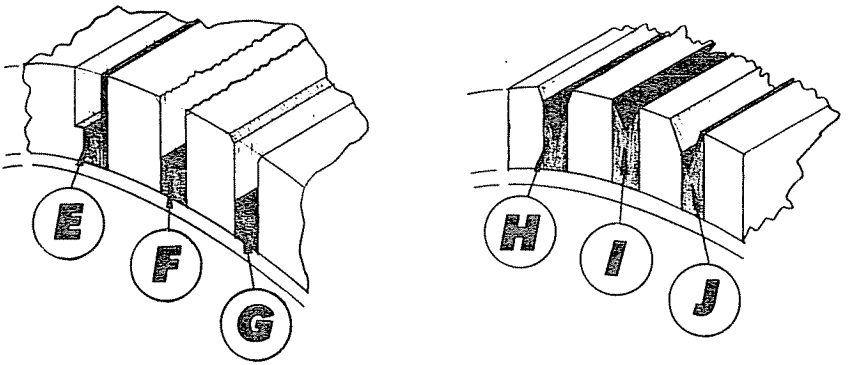

Replacing Brushes

All replacement brushes should be of the same grade, preferably of the same kind and type as originally supplied with the generator. To make certain the correct brushes are used, it is best to order them from the factory, giving generator model and type numbers as well as the part number of the brushes as listed on the parts list. It is wise to have an extra set of brushes on hand at all times.

When installing new brushes, insert them only part way into the holders so that the brush tension arm will rest against the side of the brushes and prevent them from contacting the commutator and slip rings. The new brushes are now in a position to begin the fitting operation.

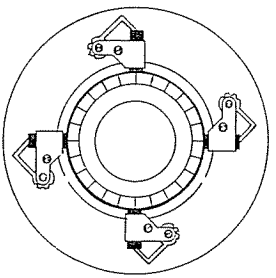

Drawing A

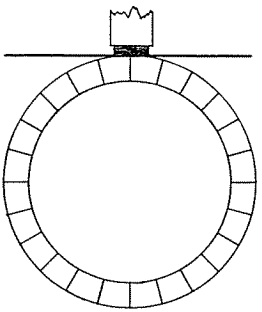

Drawing B

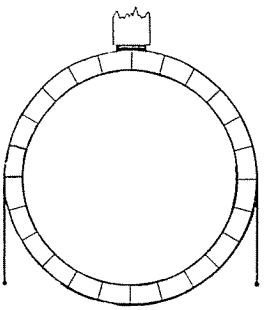

Drawing C

Brushes can be raised and locked in position away from the commutator or slip rings as shown in Drawing A.

A fine grade of sand paper can be wrapped around the commutator or slip rings and taped with the sand side toward the brushes. Then release the brushes against the sandpaper and rotate the sandpaper in the direction of operating rotation. Do not draw sandpaper across one brush at a time in a straight motion as shown at B.

The sandpaper should conform to the curvature of the commutator as shown at C.

Brush Holder Adjustments

Both the DC commutator brush holders and the AC slip ring brush holders of this generator are mounted on a single ring which fits into a machined recess in the end-bell and is secured with clamps. The DC commutator brushes are mounted on one side of the ring and the AC slip ring brushes on the other.

The brush holder ring has been set at the factory in the correct position to permit the commutator brushes to ride at the electrical neutral points of the commutator for best commutation. This position has been marked on both the endbell and the ring. If the brush ring assembly is removed, make certain that it is replaced in the position marked.

Spring pressure should be no greater than is needed to keep the brushes in constant contact with commutator and slip ring surface, approximately 2½ pounds per square inch.

Although there are provisions for brush spring tension adjustment on the holders, the tension should be increased only when absolutely necessary. The brush springs will retain their tension throughout the life of several sets of brushes providing that the tension is not destroyed by improper handling. Excessive heat will also destroy the tension of the steel wire.

Brush springs are inexpensive and replacements should be kept on hand.

The drawing shows the notches (A) in the brush holders which permits adjusting the spring tension.

The brushes can be adjusted vertically to align them with the commutator and slip rings by merely loosening the set screw (B) and moving the brush holder (C) on the brush holder stud (D).

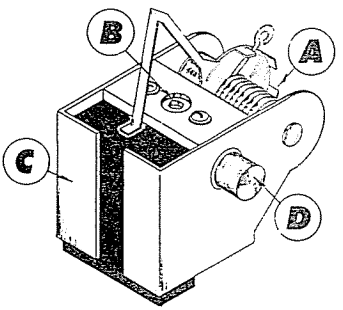

Voltage Regulation

The output voltage of this generator has been checked and adjusted during the testing period prior to shipment from the factory and will not require adjustment if operated in accordance with instructions.

A shunt field resistor (fixed type) of approximately 1.5 ohms has been placed between the field coil (A) and the DC commutator brusholder (B).

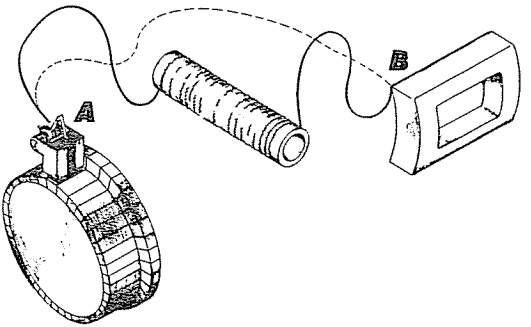

If the voltage drops below 110 or 220 volts, the resistor can be taken out and bypassed by connecting the brush lead directly to the field pole lead wire as shown by the broken line.

If voltage exceeds nameplate rating, a larger resistor can be ordered from the factory. A manually controlled rheostat can be ordered as an accessory.

Insulation Breakdown And Moisture Accumulation

If the generator has been subjected to extreme heat, moisture or other conditions which cause insulation breakdown and generator output voltage flucuates, a competent electrician should be employed to test for insulation breakdown with a megger.

A megger is a small hand operated generator which can be attached to any coil or lead wire. A low megger reading indicates a short circuit or low resistance due to insulation breakdown. Testing each coil with a megger will reveal the location of the short circuit. If the winding cannot be repaired, the factory should be contacted as replacement of coils or rewinding may be necessary.

Checking 60-Cycle Generator Frequency Without A Frequency Meter

The frequency of any rotating type AC generator is determined by the speed at which the rotating portion operates. A four-pole generator, for example, will produce a frequency of exactly 60 cycles per second if operated at a speed of 1800 revolutions per minute. Any speed variation will cause a frequency variation. For this reason, it is very important that the engine governor be adjusted properly. Detailed engine governor instructions are given in the engine instruction book.

Frequency meters can be ordered as optional equipment for these small air cooled engine generators as well as for larger units. If a frequency meter is not available the frequency can be determined and adjusted easily, using only a standard 60 cycle electric house clock as an indicator.

Plug the clock cord cap into the generator output receptacle and adjust the engine governor until the movement of the second hand of the houseclock is exactly the same as the second hand of an accurate watch.

See the engine manual for governor adjustment procedure.

This adjustment sohould be made with an average load on the generator.

Restoring Residual Magnetism

The direct current (DC) necessary to excite the magnetic field poles of this AC generator is created by a separate DC winding which is mounted on top of the AC windings in the generator armature. The DC from this excitation winding is "picked off" from the commutator by the DC brushes and fed to the stationary field coils in the magnetic field frame.

If a generator is not operated for a long period of time, the residual magnetism in the field poles may become so weak that current will not be produced when the generator operates. The residual may also be neutralized if the generator is temporarily overloaded when a large motor starts up or if a motor is stalled, causing the motor to overload the generator.

To restore the small amount of residual magnetism necessary to begin the field pole buildup, connect a 6 or 12 volt DC storage battery into the shunt field circuit, making certain that the battery is in series with the shunt field. This can be accomplished easily by first raising the DC commutator brushes to take the armature out of the circuit, eliminating unnecessary heavy current drain through the armature, and then connecting the battery positive and negative terminals to opposite brushes.

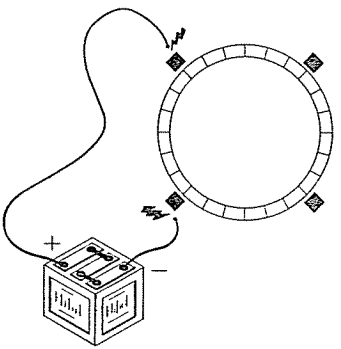

The battery can also be connected into the shunt field in this manner to supply booster current to the field poles while the generator is in operation and heavily loaded. In this event, the brushes must be in normal position, riding on the commutator.

Portable Service

Carrying handles and two-wheel dollies are available as accessories to all Katolight small power plants for ease in moving them about in construction areas or for a variety of home and farm uses.

When the engine has been started and "warmed up," merely plug the light or power tool cord caps into the generator 115 or 230 volt output receptacles as required.

A deep freeze or other home appliance can be operated directly from the plant without going through an existing wiring system.

Adapting Katolight Power Plants To Standby Service

There are three prime considerations when making plans for any standby installation of a relatively permanent nature. They are: (1) The size and nature of the emergency load desired; (2) The powerplant must be adapted to the existing wiring system, and (3) Any standby installation and transfer method from the central power line to the power plant must conform to pertinent electrical codes.

Determining The Emergency Load

The size of the powerplant necessary (wattage output) for a given load, or the amount of load that can be applied to a generator can be determined by adding the wattage requirements for each motor, appliance or light which will be operated by the standby plant during a power failure. The total should not exceed the nameplate rating of the generator.

Resistance loads, such as lights, flat iron, toaster, hot water heater, etc., are usually marked as to maximum watts consumed when in use.

Most electric motors require approximately three times as much current when starting as when running. When computing motor load it is only necessary to include the starting current of the largest motor and this added to the running current of all other motors and other load factors determines the size of generator required.

If the use of a very small plant is desired, it will be necessary to eliminate the use of all lights and appliances which are not essential.

APPROXIMATE WATTS REQUIRED FOR ELECTRIC APPLIANCES

APPLIANCE	WATTS (Starting watts for motors not shown)
Lamp Bulbs	25-150
Radio	40-200
Television	150-300
Vacumn Cleaner	200-250
Automatic washer	-400
Air Conditioner (¾ ton)	-1,250
Refrigerator	-325
Food Freezer	-300
Furnace (Oil)	-700
Deep Well Pump	-2,000
Electric Range	600-10,000
Hot Plate (per burner)	600-1,200
Toaster	600-1,130
Water Heater	1,500-5,000
Glow Heater	600-1,200
Heating Pad	40-80
Sun Lamp	250-1,000
Flat Iron	600-1,200
Laundry Dryer	-4,750
Electric Heat System	5,000-20,000

APPROXIMATE WATTS REQUIRED FOR MOTORS

MOTOR SIZE	STARTING WATTS	RUNNING WATTS
1/9 HP	500	250
1/6 HP	750	300
1/3 HP	1000	400
1/2 HP	1200	550
3/4 HP	2000	800
1 HP	2500	1000
1 1/2 HP	3750	1500
2 HP	5000	2000

Katolight Service - Master Repair Manual - Page 133

PARTS DRAWING

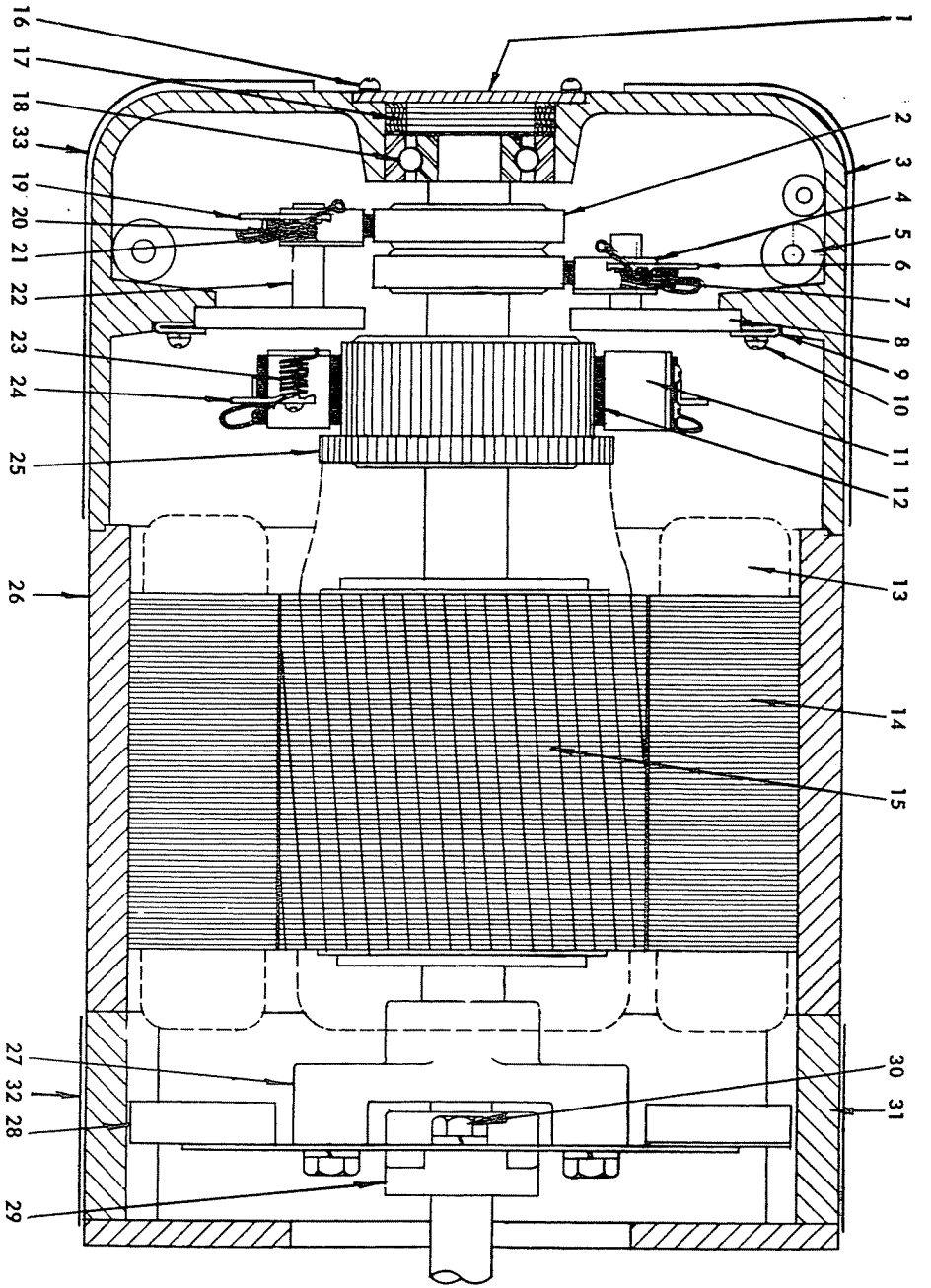

PARTS LIST

Key No.	PART NAME	Model 1HAB3 Type 12167 Part No.	No Req	Model 2HAB3 Type 11190 Part No.	No Req	Model 3HAB3 Type 11286 Part No.	No Req
26	Frame	001-80135	1	001-80067	1	001-80115	1
13	Field Coil	087-00183	2	087-00067	2	087-00091	2
14	Field Poles	024-00032-25	2	024-00133-37	2	024-00134-62	2
3	Comm. Endbell	004-80036	1	004-80036	1	004-80039	1
18	Bearing Comm. End	012-41042-01	1	012-41042-01	1	012-41042-01	1
33	Comm. Endbell Cover	009-00032	1	009-00032	1	009-00032	1
31	Drive Adapter	----------		----------		----------	
15	Armature Assembly	080-00269	1	080-00086	1	080-00089	1
28	Fan	017-00001	1	017-00001	1	017-00001	1
27	Coupling Engine Side	----------		----------		----------	
29	Coupling Generator Side	----------		----------		----------	
	Coupling Plate	----------		----------		----------	
8	Brush Holder Ring Assembly	045-00099	1	045-00049	1	045-00085	1
	Consisting of:						
	Brush Ring	046-05026-18	1	046-50001-00	1	046-06030-18	1
11	DC Brush Holder Studs	----------		049-22215	2	049-22415	2
11	DC Brush Holder (Less Brushes)	----------		047-00044	2	047-00044	2
11	DC Brush Tension Arm	----------		----------		----------	
23	DC Brush Spring	----------		048-80019	2	048-80019	2
12	DC Brushes	----------		050-08041-02	2	050-04081-05	2
4	AC Brush Holder (Less Brushes)	047-00036	2	047-00031	2	047-00045	2
22	AC Brush Holder Stud (Long)	049-22415	1	049-22415	1	049-42415	1
22	AC Brush Holder Stud (Short)	049-22215	1	049-22215	1	049-42015	1
22	AC Brush Holder Studs (Short)	----------		----------		----------	
19	AC Brush Tension Arm (Left)	----------		----------		048-60000	1
4	AC Brush Tension Arm (Right)	----------		----------		048-60000	1
21	AC Brush Spring (Left)	048-80019	1	048-80019	2	048-80000	1
4	AC Brush Spring (Right)	048-80019	1	----------		048-80000	1
20	AC Brushes	050-04081-04	2	050-06081-04	2	050-10061-04	2
5	DC Condenser	----------		868-35077-30	1	868-35077-30	1
	AC Condenser	868-21097-30	1	868-21097-30	1	868-21097-30	1
	Surge Protector	854-10601-01	1	----------		----------	
	Rectifier Bridge	851-24400-10	1	----------		----------	

Katolight Service Master Repair Manual - Page 135

Model 4HFB3 Type 11192		Model 1.5HAB4 Type 12103		Model 2.5HAB4 Type 11074		Model 4HFW4 Type 11194	
Part No.	No Req	Part No.	No Req	Part No.	No Req	Part No.	No Req
001-80032	1	001-80121	1	001-80029	1	001-80068	1
087-00020	4	087-00043	4	087-00032	4	087-00071	4
024-00073-25	4	024-00164-25	4	024-00012-75	4	024-00144-50	4
004-80013	1	004-80053	1	004-80012	1	004-80037	1
012-21052-01	1	012-51042-01	1	012-21042-01	1	012-21052-01	1
008-80006-11	1	009-00066	1	008-80006-11	1	008-80011-11	1
007-80000	1	----------		007-80000	1	007-80015	1
080-00067	1	080-00219	1	080-00027	1	080-00095	1
017-00017	1	017-00050	1	017-00017	1	017-00028	1
031-60006	1	----------		031-60006	1	031-60013	1
031-40009	1	----------		031-40009	1	031-40020	1
----------		----------		----------		030-80002	1
045-00010	1	045-00096	1	045-00015	1	045-00041	1
046-08035-25	1	----------		046-06625-25	1	046-07035-25	1
049-32215	2	049-54119	2	049-32215	2	049-32415	2
047-00015	2	047-00006	2	047-00006	2	047-00008	2
048-60005	2	048-60005	2	048-60005	2	048-60005	2
048-80008	2	048-80005	2	048-80005	2	048-80007	2
050-06061-06	2	050-12061-11	2	050-12061-01	2	050-20061-01	2
047-00016	3	047-00031	2	047-00009	4	047-00016	4
049-92216	1	049-22415	1	049-32415	2	049-43416	2
049-42416	1	049-22215	1	049-32015	2	049-42216	2
049-43014	1	----------		----------		049-42416	1
048-60015-02	3	----------		048-60005	2	048-60015-02	2
048-60015-01	3	----------		048-60005	2	048-60015-01	2
048-80012-02	3	048-80019	1	048-80008	2	048-80012-02	2
048-80012-01	3	048-80019	1	048-80008	2	048-80012-01	2
050-04081-04	6	050-08061-04	2	050-08041-04	4	050-04061-04	4
868-21097-30	1	868-35070-30	1	868-35070-30	1	868-31097-30	1
868-31097-30	3	868-21097-30	1	868-21097-30	2	868-21097	1
----------		----------		----------		----------	
----------		----------		----------		----------	

Always check the wattage requirements shown on the lamp or appliance. Check the motor nameplate of all appliances which have motors and allow for additional controls and starting load. For example, an oil furnace may include two 1/6 HP motors as well as a transformer and other control equipment.

The chart will serve as a guide in determining the emergency load and the size of the generator required. Katolight power plants have ample overload capacity and operate efficiently even at small loads.

Two And Three Wire Systems

As shown on the chart at the introduction of this book, power plants are available in either two or three wire design. There are advantages to either service. Some of the considerations are explored in the following paragraphs.

To simplify drawings, some electrical symbols have been used as follows: A line wire or "leg" which carries 115 volt alternating current (AC) is shown as L1 or L2. A neutral wire, which serves as a ground wire, is referred to as N. There is no voltage on the neutral wire unless the ground is broken.

The average home today has a three wire service when served by central station power. With 3 wire service, it is possible to get either 115 or 230 volt AC output. To accomplish this, an appliance is connected between L1 and L2 for 230 volt service and between either L2 and N or L1 and N for 115 volt service (drawing A).

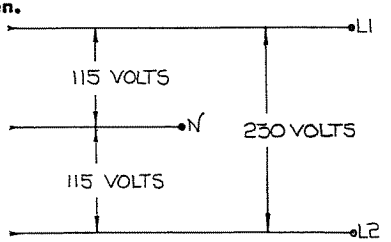

Drawing A

Note: All equipment marked 110 volt can also be supplied from 115 volt circuits. Equipment marked 220 volts can be supplied from 230 volt circuits.

Three Wire Generators

The receptacles of a 3 wire generator are connected to supply both 115 and 230 volt output. With this type connection, full load can be drawn from the 230 volt outlet. The 115 volt load must be balanced on both legs, however, if maximum 115 volt service is to be obtained. For example, if the nameplate rating is 5000 watts, the entire 5000 watts can be drawn from the 230 volt receptacle, but only up to 2500 watts can be drawn from each of the 115 volt receptacle groupings. To draw 5000 watts, 115 volt load from this generator as connected at the factory, the 115 volt load can not exceed 2500 watts on each leg (drawing B).

Each of the two 115 volt groupings can be connected to separate circuits within the distribution box. In this way, half of the generator capacity will be available to each circuit. A temporary arrangement can be made as shown in drawing C.

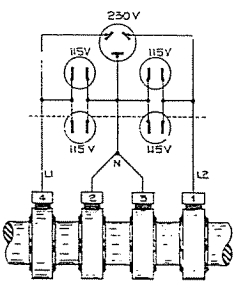

Drawing B

Katolight Service - Master Repair Manual - Page 137

For permanent standby installation with generator 115 volt output divided equally between two circuits, connect one or more circuits to L1 and N and another circuit grouping to L2 and N at a point shown by the broken line in drawing B.

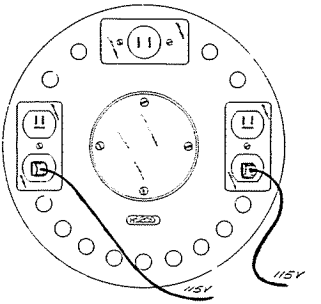

Drawing C

Because these 3 wire generators are supplied with 4 slip rings, it is possible to reconnect the 4 lead wires from the slip rings to draw maximum 115 volt output from a single circuit.

Each of the 4 slip ring wires are marked with a number at the factory. Starting at the armature and going toward the bearing, the numbers are 4, 2, 3, and 1.

To reconnect, the two wires which form the neutral (2 and 3) must be broken and wire 4 (L1) connected to wire 3 and wire 1 (L2) connected to wire 2 (drawing D).

The connection to the fused distribution box through a double pole selector switch, for this type service, is the same as shown for two wire generators (drawing H).

To fused distribution circuits through a double pole, double throw selector switch.

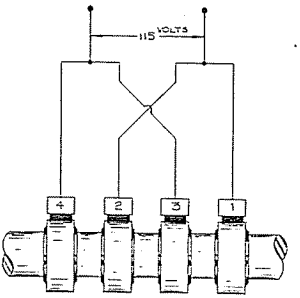

Drawing D

With this arrangement, the generator can be connected to one or more circuits within the distribution panel and maximum 115 volt capacity can be drawn through each fused circuit.

Two Wire Generators

Two wire generators have only two slip rings and two lead wires (L1 and N). It is impossible to obtain 230 volt service from these units. When connected to the distribution panel, the entire 115 volt output is available on any circuit, making it unnecessary to balance the load (drawing E). A two wire generator is very satisfactory to install where existing wiring systems are only two wire or where only 115 volt service is required.

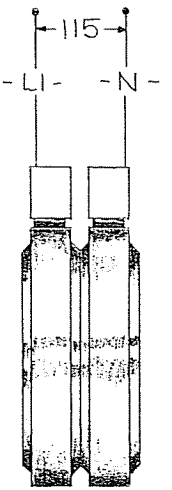

Drawing E

If it is essential that a 230 volt appliance be operated during an emergency, and it is impossible to operate the appliance from 115 volt service, a three wire standby generator must be installed.

If the only 230 volt requirement is a 230 volt, single phase electric motor, it can usually be reconnected for two wire, 115 volt service temporarily as shown in drawings F1 and F2.

Most 230 volt single phase motors can be operated at 115 volts if reconnected in the following manner.

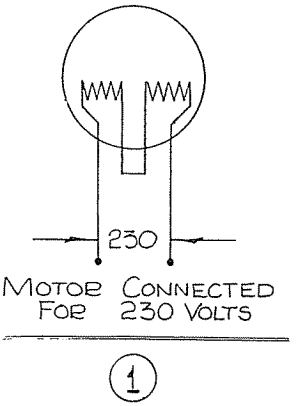

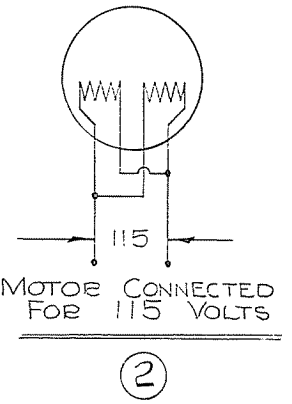

Drawing F

If large heating units must be operated during an emergency, such as electric ranges or heaters, or if the user does not wish to be inconvenienced by minimizing the load, a larger three wire power plant should be installed. One or two range burners, for example, could possibly draw all of the current from a 2500 or 3500 plant.

Methods Of Transfer

There are many different ways of connecting the transfer from normal power supply to the standby generator. Systems can be devised for the generator to handle the entire load or for it to handle only one or two preselected circuits, according to emergency needs. If the generator is connected to all distribution circuits, the emergency load must be more closely controlled at the appliances themselves.

Wiring codes vary from state to state and even within a given locality served by different power companies, so it is impossible to recommend any definite method of transfer. The examples given here are general and are intended to serve as suggestions only.

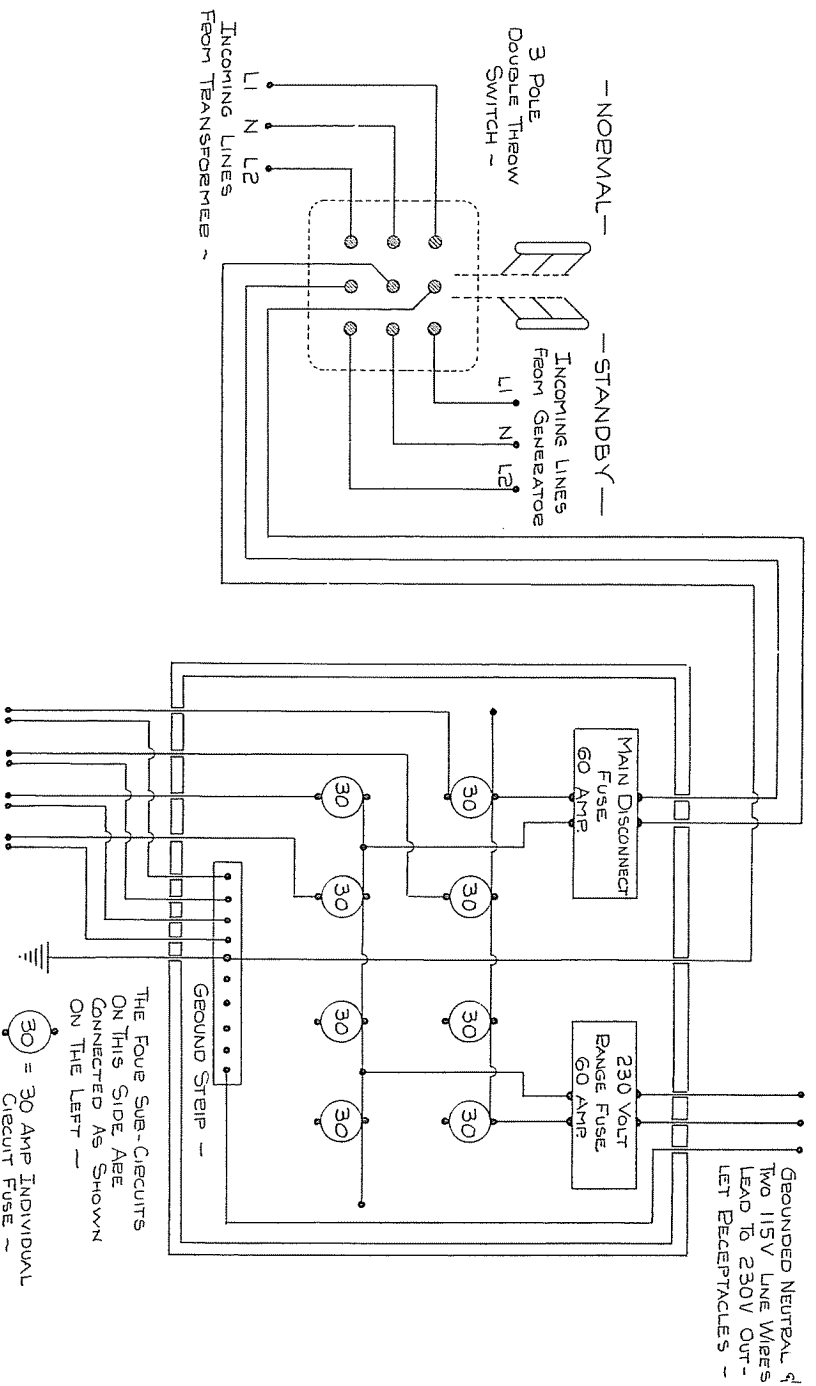
-NORMAL-
-STANDBY-
3 POLE DOUBLE THROW SWITCH -
INCOMING LINES FROM TRANSFORMER -
L1 N L2
INCOMING LINES FROM GENERATOR
L1 N L2
MAIN DISCONNECT FUSE 60 AMP.
230 VOLT RANGE FUSE 60 AMP.
GROUNDED NEUTRAL & TWO 115V LINE WIRES LEAD TO 230V OUTLET RECEPTACLES -
GROUND STRIP -
THE FOUR SUB-CIRCUITS ON THIS SIDE ARE CONNECTED AS SHOWN ON THE LEFT -
30 = 30 AMP INDIVIDUAL CIRCUIT FUSE -

Drawing G

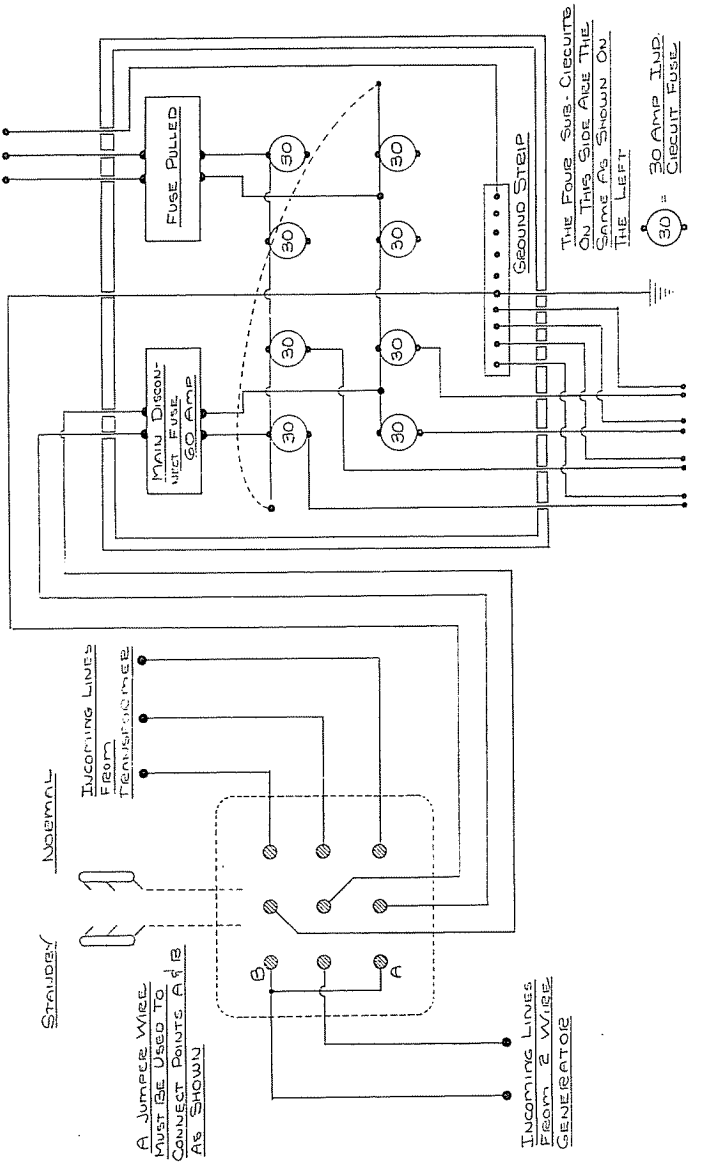

Drawing H

If double throw switch is not used, it is possible to connect the generator leads direct to distribution box by attaching the neutral wire to the ground strip and L1 and L2 to the circuit leads. Main disconnect fuse must be pulled in this case. If this is done, a jumper wire must be placed between the two sub terminals as shown by dotted line from point C to point D.

230 volt fuse should be pulled when 2 wire standby service is used. 230 volt motors will not operate but will not be harmed if fuse is not pulled, however, providing jumper wire is in place.

WHEN INSTALLING ANY TRANSFER SYSTEM, A COMPETENT LOCAL ELECTRICIAN, FAMILIAR WITH ALL EXISTING FEDERAL, STATE AND LOCAL CODES SHOULD BE EMPLOYED.

OF PRIME CONSIDERATION IN DESIGNING ANY STANDBY SYSTEM IS THAT PROVISIONS BE MADE TO PREVENT THE GENERATOR FROM FEEDING BACK INTO THE COMMERCIAL LINES SHOULD CURRENT FROM THE STANDBY PLANT BE IN CIRCUIT WITH THE MAIN INPUT LINE, THE VOLTAGE STEP DOWN TRANSFORMER WILL ACT AS A STEP UP TRANSFORMER, PLACING A HIGH VOLTAGE ON THE HIGHLINES. A LINE WORKER, MAKING REPAIRS ON THE LINES, COULD BE KILLED INSTANTLY.

Drawing G shows one possible method of permanently installing a 3 wire generator into the entire wiring system. Drawing H basically illustrates a method of connecting a two wire standby generator into a 3 wire wiring system. Drawing I shows how a double throw switch can be installed directly between the load and the generator.

With two wire service, a two-pole, double throw switch can be connected between one or more of the distribution circuits and the load, as shown in figure H. With this arrangement, the line from the power station remains closed through the distribution panel and up to the switch. When the switch is closed between the generator and the load, the circuit from load to the normal supply is broken and there is no danger of feed back from the generator into the lines.

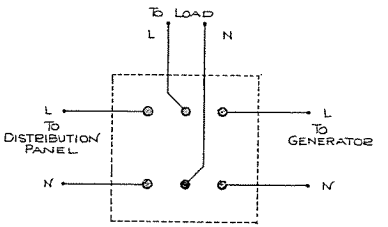

Drawing I

Balancing Load On Three Wire Distributing System

When the commercial lines are operating normally, the 3 wire system is supplied from a secondary of a transformer. When the load on each leg is approximately the same, the current is zero in the neutral wire. No current flows on the neutral.

If this load were placed on a two wire system, the current drain would be 40 ampres on the wire from transformer to fused circuit breakdown box, requiring wire of at least twice the size as with three wire service. This, and the fact that many homes which do not require 230 volt service when initial wiring is done may require it later, are reasons why most commercial wiring codes now call for 3 wire service.

Farm and residential distribution transformers are usually of ample capacity to take care of the customers unbalanced load requirements.

The distribution circuits in the home are equally distributed across the 3 wire system. If there are eight circuits, there will be four circuits on each leg. This is illustrated in drawing G.

Because of the output limitations of small standby plants, the necessity of balancing the load on each leg is much greater. The following illustrations will illustrate more clearly the necessity of balancing a three wire generator and explain why there is no problem of overloading a circuit when a two wire generator is used providing nameplate full load rating is observed and proper sized wire is used.

If a 115 volt motor requires 2500 watts for starting, it is necessary to have a 5000 watt 3 wire generator as the capacity on each leg is 2500 watts. A 2500 watt 2 wire generator could supply this motor if there is no additional load. See drawings I and J.

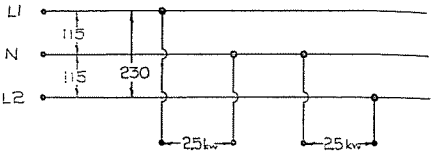

Line from 115/230 volt, 3 wire, 5000 watt generator fully loaded and balanced with 115 volt load. There is no 230 volt load.

Drawing J

A 2500 watt 3 wire generator, as connected at the factory could not supply the motor as there is only 1250 watts on each leg (drawing K).

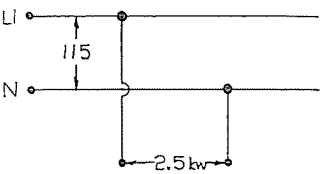

Line from 115 volt, 2 wire, 2500 watt generator. There is no problem of balancing.

Drawing K

When dividing the emergency load over circuits supplied by each of the two legs of a three wire generator, a balanced load on each leg must be determined. For example, if circuits 1 through 4 in the distribution panel are supplied by L1 and circuits 5 through 8 by L2, the emergency load should be distributed evenly to take advantage of the full capacity of the generator (drawing L).

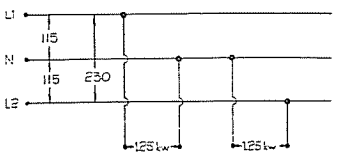

Line from a 115/230 volt, 3 wire, 2500 watt generator fully loaded and balanced with 115 volt load. There is no 230 volt load.

Drawing L

When a 230 volt load is placed on the 230 volt circuits of a 3 wire generator, half of that load will be on L1 and half on L2. If either L1 or L2, 115 volt circuit groupings are fully loaded, any additional 230 volt load will overload the generator (drawing M).

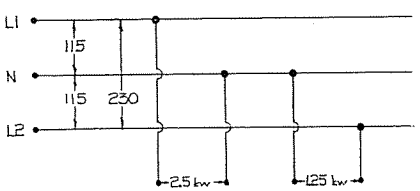

Line from a 115/230 volt, 3 wire, 5000 watt generator. Load is unbalanced. Any additional load must be added between L2 and N.

Drawing M

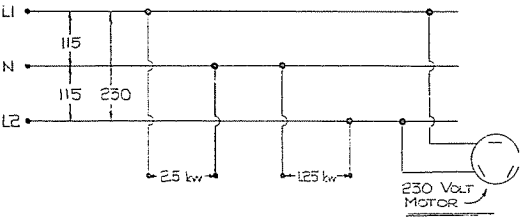

Line from a 115/230 volt, 3 wire generator. Line 1 is fully loaded. Line 2 is partially loaded. If any 230 volt load is applied, L1 will be overloaded.

Drawing N

TROUBLE SHOOTING PROCEDURES

AC GENERATORS

After a generator has been in service for many running hours, or if regular maintenance and checking is neglected, repairs and replacement of component parts may be necessary, as with any other machine. Almost all troubles that may occur are listed in the following pages, together with the probable causes and remedies for each. All instructions do not apply to both revolving field and revolving armature generators.

Instructions concerning excitation are intended to be general enough to include separate rotating DC exciter, excitation winding on armature or static excitation of magnetic field poles of AC generators.

VOLTAGE DEVIATIONS

The generator output voltage should be kept as close as possible to the voltage shown on the generator nameplate. High voltage, low voltage and fluctuating voltage (voltage hunting) may cause serious damage to the generator as well as the equipment operating from the generator current.

NO VOLTAGE

Cause	Remedy
Poor brush connection (either commutator or slip ring brushes.)	Clean and adjust or replace brushes. Repair commutator and slip rings if necessary. Make certain that brushes do not bind in brush holders and that brush wires are connected properly. See additional information concerning maintenance of brushes, commutator and slip rings.
Loss of residual magnetism in field poles, by long inactivity, lightning striking system, overload or short circuit.	Raise DC brushes and contact positive and negative brushes to a 6 or 12 volt storage battery momentarily to produce polarity.
Excitation (DC) leads open or shorted.	Check with continuity lamp or ohm meter. Replace leads if necessary.
Too much resistance in field rheostat or resistor.	Reduce resistance of rheostat or remove or replace resistor.
Open field circuit in field coils, field rheostat switch or fuse.	A DC test lamp should be used to trace the open circuit. If open circuit is indicated, repair or replace defective part.

Cause	Remedy
Short circuit in line or load.	Check for short in load by removing each individual motor or appliance from the line by switching it to off. Check the line by disconnecting the generator from the line at the generator terminal box.
Open armature windings due to commutator throwing solder from riser because of excessive heating.	Commutator must be resoldered, turned and undercut. See commutator maintenance instructions.
Coils shorted or open.	Check for open circuit with a continuity lamp and for short circuit with an ohm meter. Replace coil if necessary.
Shorted slip rings.	Disconnect lead wires and check slip ring insulation with a megger. Repair or replace slip ring assembly if defective.
Defective meters.	Repair or replace or bypass meters.
Open ammeter shunt or filter choke.	Check for open circuit with a continuity lamp. Replace or repair defective part.
Internal moisture, indicated by low resistance readings on megger.	Dry out the windings. Machines of small capacity may be dried out by putting them into a hot, dry room or by heating them up moderately from an outside source. Large machines should be run several hours with full load current with generator lead wires short circuited. To do this, lower the AC voltage by adjusting the field rheostat to maximum resistance so that the stator coils are not overloaded.

LOW VOLTAGE

Cause	Remedy
Excessive load.	Reduce load. With 3 wire, single phase and 4 wire, three phase generators, the load on each leg should be as evenly balanced as possible and should not exceed the rated current on any leg.

Cause	Remedy
Low Speed: 1. Belt slipping. 2. Defective governor. 3. Defective carburetor. 4. Defective bearing. 5. Excessive load.	1. Tighten belt. 2. Adjust, repair or replace governor. 3. Adjust, repair or replace carburetor. 4. Replace bearing. 5. Reduce load.
Insufficient excitation.	Decrease field resistance by adjusting rheostat or removing resistor or adjusting resistor jumper wire.
Line loss.	Increase size of line wire.
High resistance connections. Connections will be warm or hot.	Make better connections electrically and mechanically.
Reversed field coil or armature coil connection.	Connect properly.
Shorted field.	Test field coils for possible short by checking resistance with an ohm meter or resistance bridge. Replace defective coil if necessary.
Brushes dirty or not properly seated.	Clean or replace brushes and reseat.
Slip rings or commutator dirty or in need of repair.	Clean or repair as necessary. See additional information concerning care and repair of slip rings and commutator.
Low power factor.	Reduce inductive (motor) load. Some AC motors draw approximately the same current regardless of load. Do not use motors of larger horse power rating than is necessary to carry the mechanical load.
Weak field due to operating in warm temperature.	Improve the ventilation if generator is housed indoors. Field current can be increased providing the generator temperature does not exceed temperature rating stamped on the nameplate.

FLUCTUATING VOLTAGE

(May be indicated by flickering lights)

Cause	Remedy
Irregular speed of prime mover (engine or electric motor).	Check and adjust governing device and carburetor if engine driven.
Voltage regulator not operating properly (regulator may be automatic or manual adjust. Many generators are equipped with a rheostat or a fixed resistor only.	Regulator may be bypassed. If generator is operated without regulator, output voltage should be checked to make certain that it is approximately the same as stamped on the generator nameplate.
Fluctuating load.	Stabilize load. The addition of a lamp load (resistance load) may compensate partially for load changes caused by intermittent motor operation.
Poor brush contact.	Clean and adjust or replace brushes. See additional information concerning care of brushes, commutator and slip rings.
Loose terminal or load connections.	Make better connections mechanically and electrically.
Generator overloaded.	Reduce load.
Slip rings or commutator out of round or pitted.	Turn rings or commutator on a lathe concentric with bearings. See slip ring and commutator maintenance instructions.
DC excitation voltage fluctuating.	Trace DC excitation through brushes, commutator and field coils and make repairs as necessary.
Shorted field coil.	Test field coils for possible short by checking resistance with an ohm meter or resistance bridge. Replace defective coil if necessary.
Defective bearing causing uneven air gap.	Replace worn bearing.

HIGH VOLTAGE

Cause	Remedy
Improper field adjustment (excessive magnetic field strength.)	Increase excitation field resistance by adjusting rheostat or adding a fixed field resistor.
Excessive speed.	Adjust governor and carburetor if engine driven, making certain generator operates at rated speed as stamped on the generator nameplate.
Faulty voltage regulator operation.	Try operating without regulator or replace regulator.
Operating in sub-zero temperatures.	Increase field resistance.

BRUSH SPARKING

Cause	Remedy
Commutator defective: 1. Outer surface not concentric with shaft. 2. High mica bars. 3. Surface pitted or rough.	Machine and undercut commutator according to specific instructions in this book.
Slip rings defective: 1. Surface not concentric to shaft. 2. Surface pitted or rough. 3. Slip ring insulation defective.	Repair slip rings according to maintenance instructions in this book, or replace.
Brushes not in commutating plane.	Brush holder rings are set at the factory and marked in a position so that the brushes ride at electrical neutral points on the commutator. If brush ring is removed for any reason it should be replaced in the original position as marked.
Loose brush holder.	Realign and tighten.
Lack of brush pressure.	Adjust or replace brush tension spring.

Cause	Remedy
Improper grade of brushes.	If time permits, order brushes from the factory by part number. It is best to keep an extra set of brushes on hand and replace old brushes when approximately two-thirds worn.
Dirty commutator or slip rings.	Sand lightly with 00 sandpaper.
Generator overloaded.	Check ammeter readings and compare with nameplate rating. With 3 wire, single phase and 4 wire, three phase generators, the load on each leg should be as evenly balanced as possible and should not exceed the rated current on any leg.
Open armature	Check for open circuit with a continuity lamp. Repair or replace armature if necessary.
Grounded, open or shorted field winding.	Check for open circuit with a continuity lamp and for short circuit with an ohm meter. Replace coil if necessary.

OVERHEATING

Most machines are designed to withstand a temperature rise of 50°C (see nameplate rating) 50 degrees Centigrade equals 122 degrees Fahrenheit.

Cause	Remedy
Generator overloaded.	Reduce load. (Check ammeter readings and compare with nameplate rating.)
Clogged ventilating screens.	Clean air passages.
High room temperature.	Improve ventilation.
Insufficient circulation.	Provide cross-ventilation.
Operating with excessive voltage.	Check voltage drop in distribution lines and connections and adjust voltage as described in voltage deviation instructions.

Cause	Remedy
Low power factor.	Reduce inductive load (motors), or install power factor improvement capacitors.
Unbalanced load on 3 wire, single phase or 4 wire, 3 phase generators.	The load on each leg should be as evenly balanced as possible and should not exceed the rated current on any leg.
Motors operating off generator not designed for generator frequency and voltage.	Motors operating from generator must be of the same frequency and voltage as stamped on the generator nameplate.
Generator coils or windings shorted or grounded.	Test field coils for possible short by checking resistance with an ohm meter or resistance bridge. Replace defective coil if necessary.
Excessive brush pressure.	Adjust pressure or replace brush tension springs.
Coupling misaligned or belt too tight.	Align or adjust.
Bent shaft.	Straighten or replace.
Endbells out of position.	Align endbells so that the air gap between the rotating part and the stationary part is equal at all points.
Dry bearing.	Replace bearing.

MECHANICAL NOISE

Cause	Remedy
Dry or defective bearing.	Replace bearing.
Rotor rubbing on stator.	Replace worn bearings.
Loose lamination.	Tighten bolts, dip in varnish, and bake.
Loose or misaligned coupling.	Tighten or align.

FREQUENCY DEVIATION

Cause	Remedy
Generator speed above or below nameplate rating orfluctuating.	Adjust governor.

RADIO INTERFERENCE

Cause	Remedy
Radio frequency interference generated by sparking brushes.	Connect .5 mfd. capacitors from all ungrounded brushes to the frame. Voltage rating of the capacitors should be at least twice the rated voltage of the circuit to which they are connected.
Radio interference caused by leakage of static charge from generator shaft.	Install shaft grounding brush assembly, purchased from the factory.
Radio interference caused by electrical system of prime mover (engine or electric motor.)	Suppress radio interference. Consult a competent radio repair man or electrician.

GENERATOR FRAME PRODUCES SHOCK WHEN TOUCHED

Cause	Remedy
Static charge built up by high speed belts, etc.	Ground generator frame.
Grounded armature or field coil.	Repair.

INSTALLATION OF 2 WHEEL DOLLY

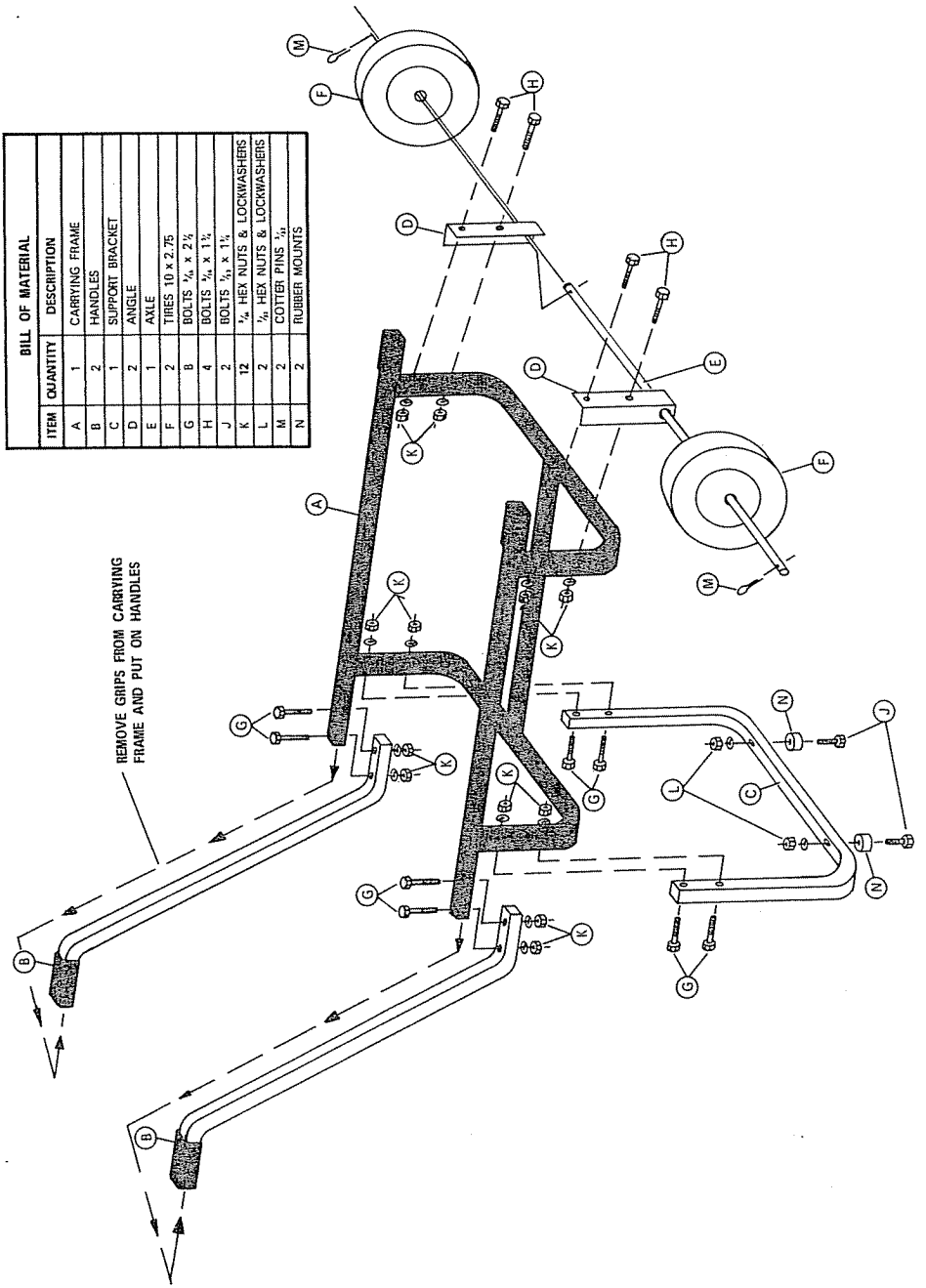

KATOLIGHT PORTABLE GENERATING SETS ALSO AVAILABLE WITH THE FOLLOWING ACCESSORIES

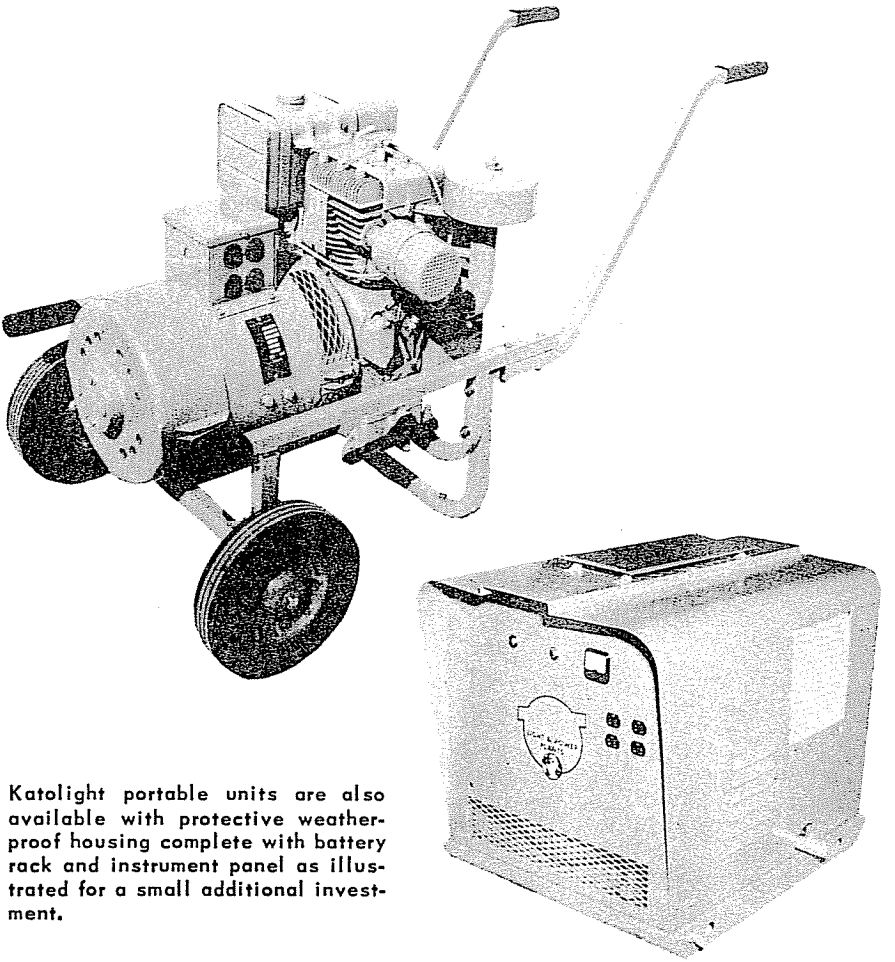

Katolight portable units are also available with protective weather-proof housing complete with battery rack and instrument panel as illustrated for a small additional investment.

This series of lightweight, portable A.C. power plants offers nine models in popular sizes from 750 to 5000 watts. These husky, dependable plants are equally adaptable to provide emergency power when normal power fails, or for portable use to operate electrical tools, equipment and lights when regular power is unobtainable.

A small investment in a Katolight Power Plant of the proper capacity is low cost protection against possible loss of life and property and inconvenience caused by power failure due to storms, floods or accidents.

Lightweight generating plants which are ideal for many portable applications; for work crews, camps, radio receivers, fire department and emergency units. These models are easily transported in the trunk of a car and can be used on any location where utility electricity is not available. Plants are ready for operation with the addition of gasoline and oil.

KATOLIGHT *CORPORATION* Box 939, Mankato, Minn. 56001

Printed in U.S.A. 4-69

OPERATING INSTRUCTIONS, SERVICE INFORMATION and PARTS LISTS

For KATOLIGHT Portable Power Plants

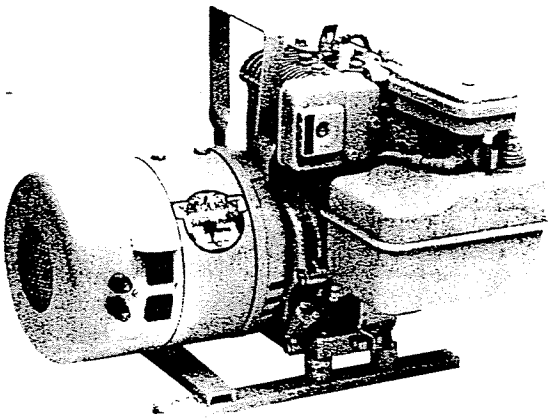

2HAB3

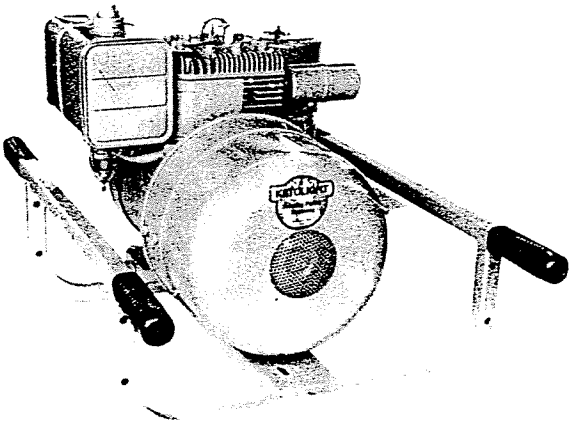

3.5HFB3 and 3.5HFB3E

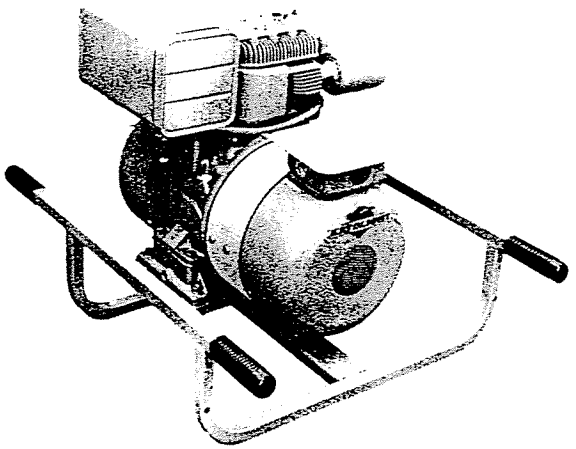

5HFB3 and 5HFB3E

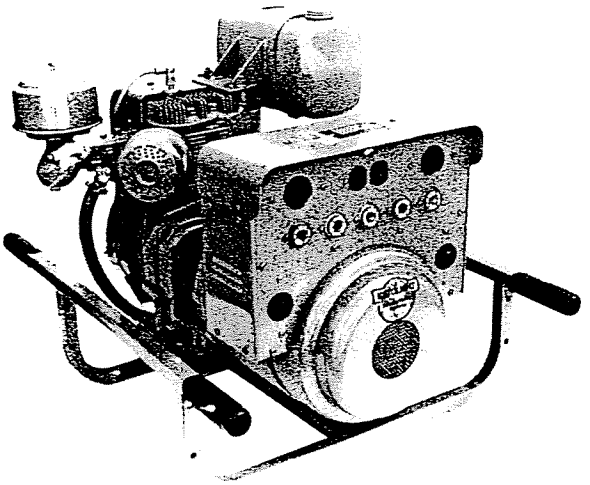

7.5HFW3E

Read this book before operating your generator, and save for future reference.

Write the Model number, Type number and Serial number of your generator in the spaces to the right. Be sure to give these numbers when ordering parts or corresponding about your generator.

Alternator Model _____

Serial _____

KATOLIGHT CORPORATION

3201 Third Ave. Mankato, Minnesota 56001

P.O. Box 3229 Ph. (507) 625-7973

Form AD1/1-8/77
Revised 10-78

TABLE OF CONTENTS

Introduction	1
Installation	1
Operation	3
Maintenance	5
Trouble Shooting Chart	6
Generator Parts — Unassembled	9
Parts Ordering Instructions	10
Parts Lists	10
Two-Wheel Dolly	14

UNITS COVERED IN THIS MANUAL

MODEL NUMBER	WATTS	VOLTS	WIRE	ENGINE	MODEL	TYPE START	AMPS	PHASE
2HAB3	2000	115	2	B & S	130432	MANUAL	17.0	1
3.5HFB3	3500	115/230	3	B & S	190432	MANUAL	15.2	1
3.5HFB3E	3500	115/230	3	B & S	190432	ELECTRIC	15.2	1
5HFB3	5000	115/230	3	B & S	252412	MANUAL	23.0	1
5HFB3E	5000	115/230	3	B & S	252412	ELECTRIC	23.0	1
7.5HFW3E	7500	115/230	3	WISC.	S-14D	ELECTRIC	32.6	1

INTRODUCTION

Before any Katolight Power Plant is shipped from the factory the generator is inspected and tested for performance. No unit is shipped unless it produces its rated capacity. Carefully unpack the generator set and visually inspect it for damage. If it is damaged, check with the transportation carrier for adjustment of the damage. If upon installation a new generator does not work properly, check all electrical connections and the generator speed before concluding the generator is defective.

GENERATOR DATA

Important data about your generator set is given on the nameplate attached to the power plant. Copy your power plant nameplate information in the spaces provided. Generator must be run at the speed (RPM) indicated on the nameplate. The load should not exceed the watts indicated on the nameplate. Load unbalance should not exceed 10% on 115/230 volt machines. When writing or calling Katolight for any information on the power plant, make sure to mention the Model, Type and Serial number from the nameplate or from this section.

KATOLIGHT

MODEL

TYPE

SERIAL

WATTS

VOLTS A.C.

AMPERES

PHASE HZ

RPM

MANKATO, MINN. U.S.A.

INSTALLATION

LOCATION

There are several factors to be considered when choosing a good location.

Moisture — All electrical equipment should be protected from excessive moisture which deteriorates insulation and causes short circuits.

Dirt — Dust, sand and lint cause excessive wear, not only to the engine but also to the generator. Install the unit in a clean location.

Heat — The engines used on these generators are air-cooled, so the temperature of the room in which one is located should not exceed 110 - 120° F. (43.3 - 48.9° C.).

Cold — Automatic engine-generators should be located away from freezing temperatures.

Exhaust — Exhaust fumes must be vented to the outside. The engine should be installed at least two feet from any outside wall. Using a too long or too small exhaust pipe can cause excessive back pressure.

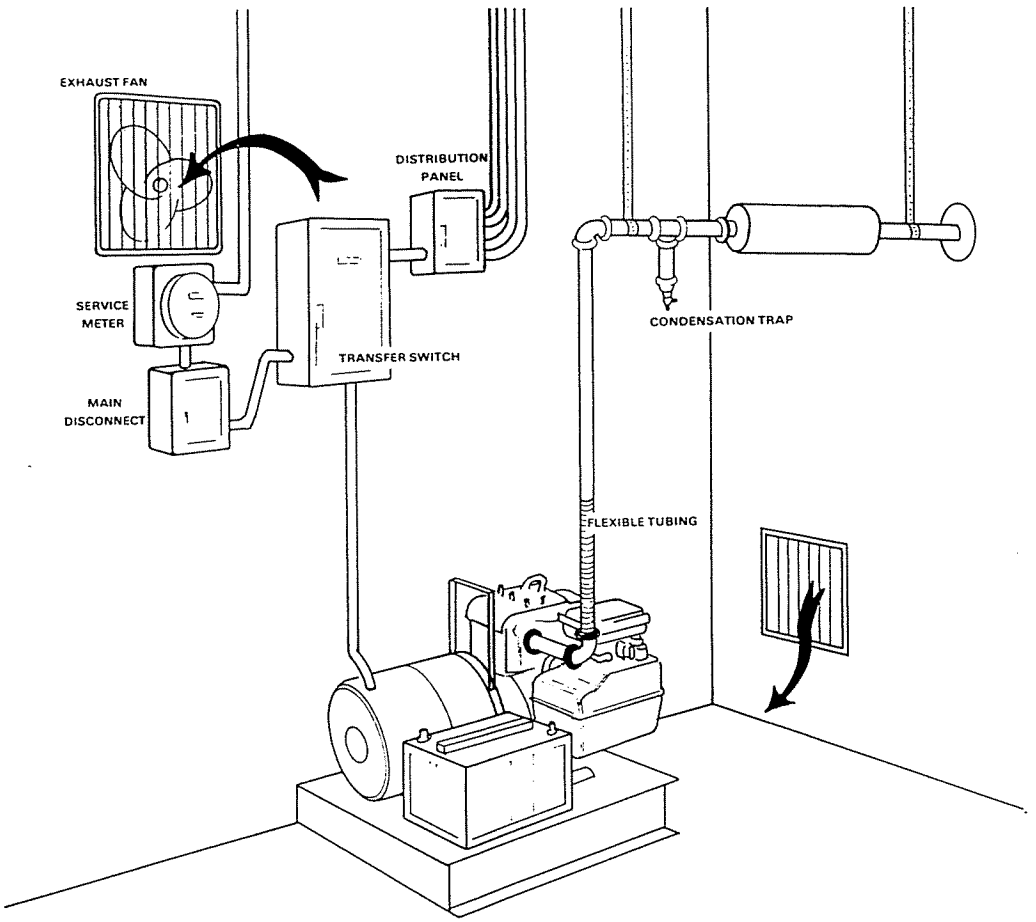

INSTALLATION RECOMMENDATIONS

If the exhaust pipe rises above the engine, a condensation trap should be installed to prevent moisture from running into the engine. This trap consists of an ordinary pipe "T" in the exhaust pipe. At the lowest point of the T install a short length of pipe pointing downward and provide it with a drain plug to drain away the accumulated moisture.

Horizontally running pipe must be adequately supported by steel straps. Noise transfer can be minimized by supporting the pipe with isolators at the attachment points.

Flexible exhaust tubing should be used at the engine exhaust outlet to minimize vibration transfer. It can be used horizontally, vertically, or at a slant, but it should be kept in a fairly stright line to prevent excessive strain on the welded end connections. Also, try to keep the number of elbows in the exhaust pipe to a minimum.

The size of the exhaust pipe to be used depends upon the length of the run:

Diameter of engine exhaust hole	Length of the exhaust run up to 5 ft. use	5 to 15 ft. use	15 to 25 use
½ in.	½ in. pipe	¾ in. pipe	1 in. pipe
¾ in.	¾ in.	1 in.	1¼ in.
1 in.	1 in.	1¼ in.	1½ in.
1¼ in.	1¼ in.	1½ in.	2 in.

If the exhaust pipe passes through a wood wall or one of any other combustible material, take necessary precautions to eliminate a fire hazard. The muffler furnished with the unit may be installed at the end of the exhaust pipe outside the building to silence the exhaust.

The National Board of Fire Underwriters Standard for the Installation and Use of Combustion Engines and Gas Turbines states:

"Exhaust pipes passing directly through combustible walls or partitions shall be guarded at the point of passage by one of the following methods:"

a. "Metal ventilated thimbles not less than 12 inches larger in diameter than the exhaust pipe; or

b. "Metal or burned fire clay thimbles built in brick work or other approved fire-proofing materials providing not less than 8 inches of insulation between the thimble and combustible material.

"Exhaust pipes shall be connected to or pass inside of a metal, masonry, or factory-built chimney when the exhaust gases go through a floor, ceiling, attic or concealed space. When an exhaust pipe is connected to a chimney, a muffler shall be installed between the engine and the point where the exhaust pipe enters the chimney. The exhaust pipe shall be extended up into the chimney beyond any other flue collars from other fuel-burning appliances which are vented into the chimney."

CONNECTIONS AND WIRING

All wiring from a power plant receptacle should conform to the National Electric Code and state and local regulations. Connecting the power plant to a house wiring circuit should be done through a transfer switch which will prevent damage to the alternator and circuit components if the commercial power is restored during operation. It will also prevent your power plant from feeding electrical current into the commercial power system.

If grounding is required in local codes, drive an approved ground rod into the ground as close to the plant as possible. Connect an approved ground clamp to the ground rod by running a no. 10 or 12 wire from the clamp to the battery negative terminal on the control panel or alternator ground lead.

WIRE

Use a sufficiently large insulated wire to connect load to generator. The size will depend largely on the distance, the permissible voltage drop between the plant and the load, and the amount and kind of load. Consult a competent electrician. Check national and local codes before installing.

For model 2HAB3 use no. 12 wire for distances up to 100 feet except for motor driven loads. Use no. 10 wire for distances between 100 feet and 300 feet and motors up to ½ H.P. Use no. 8 wire for distances over 300 feet.

For models 3.5HFB3, 3.5HFB3E, 5HFB3, 5HFB3E, and 7.5HFW3E use no. 10 wire for distances up to 100 feet, no. 8 wire for distances between 100 feet and 300 feet, and no. 6 wire for distances over 300 feet.

For battery cables on generators having battery charging features, use no. 4 or larger wire to connect the battery. Lead length should not exceed six feet.

DETERMINING LOAD

The load can be determined by adding the wattage requirements for each light, appliance and motor which will be operated by the power plant. The following chart lists approximate watts required for various electrical appliances.

APPLIANCE	WATTS REQ.
Light bulbs	See wattage on bulbs
Radio	40 - 200
Television	150 - 300
Vacuum cleaner	200 - 250
Automatic Washer	400
Air conditioner (¾ ton)	1,250
Refrigerator	325
Food Freezer	300
Furnace (oil)	700
Deep well pump	2,000
Electric range	600 - 10,000
Hot plate (per burner)	600 - 1,200
Toaster	600 - 1,130
Water heater	1,500 - 5,000
Glow heater	600 - 1,200
Heating pad	40 - 80
Sun lamp	250 - 1,000
Iron	600 - 1,200

OPERATION

Before starting the engine fill the crankcase with the proper grade of oil as directed in the engine instruction manual. Use a good grade of regular gasoline. Do not use Ethyl. Make sure the gas tank vent and the shut off valve are open.

The rated output of each generator is based on factory tests on typical units and is subject to and limited by the temperature, altitude, fuel and other conditions specified by the manufacturer of the applicable engine. Engine power will decrease 3½% for each 1,000 feet above sea level, and 1% for each 10° F. (5.6° C.) above standard temperature of 60° F. (15.6° C.).

NOTICE REGARDING ENGINES

This instruction book covers only the generator, not the engine. See the engine instruction book for any engine problems.

POWER PLANT CAPABILITIES

These Katolight electric alternator type power plants are designed to provide 60 cycle alternating current at 3600 RPM. The output voltage is 115 volts, 230 volts, or a combination of 115/230 volts depending on the model. All units are equipped with solid-state exciter systems and are coupled directly to the engine for permanent alignment.

The alternator is inherently self-regulating and its output automatically adjusts to the load. The alternator will not be damaged if it is operated at no-load condition. Your alternator has a large overload capacity, sufficient to handle momentary loads (such as starting motors) approximately 25% above its rating and 10% overloads for ¼ to ½ hour.

STARTING AND STOPPING

All engine generators can be started manually by use of a crank, rope, or recoil starter. Check oil level before starting.

Manual start engines can be started only at the engine.

Refer to engine instruction book for detailed instructions on starting and stopping engine.

Controls for starting and stopping the plant automatically are also available. **Emergency transfer controls** are designed to automatically control the plant if it is to be used as a standby generator. If the main source of power fails, the **Automatic transfer switch** will sense the failure, will start the engine generator, and will transfer the load from the main source to the engine-generator. When the power failure is corrected the automatic transfer switch will transfer the load back to the main source and stop the engine.

REQUIRED OPERATING SPEED

The engine generator must be run at the proper speed in order to furnish the electrical power it was built to produce.

All air-cooled engines used for portable generators with standard mechanical governors have a tendency to slow down when a load is applied. The governor on the engine is designed to hold the speed as nearly constant as possible. When the electrical load connected to the generator is increased, the engine is more heavily loaded and the speed droops slightly. This slight decrease in speed, together with the "voltage drop" within the generator itself, results in a slightly lower voltage when the generator is loaded to its full capacity.

The following amperes are produced at 115 volts and at 230 volts for the various generator wattages shown.

WATTS	AMPERES AT 115 VOLTS	AMPERES AT 230 VOLTS
2000 (2HAB3)	17.39	NA
3500 (3.5HFB3 & 3.5HFB3E)	30.43	15.21
5000 (5HFB3 & 5HFB3E)	43.48	21.74
7500 (7.5HFW3E)	65.22	32.61

Although individual units and models may vary slightly, the normal voltage and frequency of typical 60 cycle engine-driven generators described in this book are approximately as follows:

Load Applied	Generator Speed 2 Pole	4 Pole	Frequency	Generator Voltage 115 V. Plants	230 V. Plants
None	3660	1830	62	129	258
Half	3600	1800	61	120	240
Full	3510	1755	60	115	230

For 50 cycle generators the corresponding speeds, frequencies and voltage would be approximately as follows:

Load Applied	Generator Speed 2 Pole	4 Pole	Frequency	Generator Voltage 110 V. Plants	220 V. Plants
None	3050	1525	52	122	245
Half	3000	1500	51	115	230
Full	2925	1462	50½	110	220

The speed of the engine is carefully adjusted at the factory so that the generator produces the proper voltage and frequency. For all normal usage the speed setting should not be changed. If the generator is being run continuously on a very small load, it may be well to lower the speed slightly; if it is being used constantly at full load, it may be well to raise the speed slightly. Whenever making any speed adjustments check the unit with a voltmeter, tachometer, or frequency meter.

Unless the engine is equipped with a special idling or low speed switch, the engine must be run at the specified speed at all times.

The output voltage should be checked periodically to insure proper operation of the generating plant and appliances. If the generator is not equipped with a voltmeter, use a portable meter.

USE OF ELECTRIC MOTORS

Electric motors require more current (amperes) starting than running. Split-phase motors are difficult to start and require 5 to 10 times as much current to start as to run, dependent on the NEMA code letter rating. Capacitor motors require 2 to 4 times as much current to start as to run. Repulsion Start Induction Motors require 1½ to 2½ times as much current to start as to run.

The chart below shows the approximate current required to run and start 115 volt, 60 cycle, NEMA Code F induction motors under average load conditions.

HORSE POWER	RUNNING AMPERES	STARTING AMPERES
1/6	4.4	22 to 24.60
1/4	5.8	29 to 32.42
1/3	7.2	36 to 40.29
1/2	9.8	49 to 54.78
1	16.0	80 to 89.44

The NEMA code letter assigned by the motor manufacturer will govern the starting (locked rotor) current surge. The chart below shows the NEMA code letters and their corresponding range of multipliers for the starting current requirement in amperes.

NEMA CODE LETTER MOTOR RATING	RATIO OF RUNNING TO STARTING (LOCKED ROTOR) AMPS
A	0 – 3.14
B	3.15 – 3.54
C	3.55 – 3.99
D	4.0 – 4.49
E	4.5 – 4.99
F	5.0 – 5.59
G	5.6 – 6.29
H	6.3 – 7.09
J	7.1 – 7.99
K	8.0 – 8.99
L	9.0 – 9.99
M	10.0 – 11.19
N	11.2 – 12.49
P	12.5 – 13.99
R	14.0 – 15.99
S	16.0 – 17.99
T	18.0 – 19.99
U	20.0 – 22.39
V	22.4 – and up

Here is an example of reading the chart:
The starting current for a Code F motor with a running current of 10 amps would be 5 to 5.59 times the 10 amp running current, or 50 to 60 amps.

Running current for 230 volt motors is half that of the 115 volt motors of the same size. Some dual voltage (115/230 volt) motors are difficult to start on 230 volts when driven by engine-generators and can be started more easily when connected to operate on 115 volts. This is particularly true of "Capacitor Start – Induction Run" motors. A 230 volt motor which cannot be started on the 230 volt circuit of a 115/230 volt generator usually can be started on a 115 volt circuit.

If an electric motor, requiring a little more output than the generator can produce is connected to it, it will operate but will not reach a high enough speed for the centrifugal switch to disconnect the starting winding. The 115 generator output voltage may drop to 70 or 80 volts. Running the generator

under these conditions may result in damage to the generator armature as well as the motor windings.

Because the heavy surge of current required for starting motors is needed only for an instant, the generator will not be damaged if it can bring the motor up to speed in a few seconds. If difficulty is experienced in starting motors, turn off all other electrical loads and, if possible, reduce the load on the electric motor.

MAINTENANCE

The generator of your plant consists mainly of field frame, field coils, armature, a set of brushes, brush holder assembly, end brackets, a fan mounted on the armature to keep the generator cool, and a control box.

Brushes: Check the brushes for wear after about 1000 hours of operation and every few hundred hours of operation thereafter. They should be replaced when worn down to 3/8 inch. Whenever replacing brushes, remove them one at a time and put the screws back in the brush holder to hold the lead wire terminals in place.

Commutator: Keep the commutator free from carbon dust or other dirt with a lint-free cloth. The Commutator should be smooth and shiny. If it is rough or black, polish it with a commutator dressing stone or with No. 00 sandpaper. (Never use emery cloth).

A hard mica is used as an insulator between the commutator bars. This is undercut about 1/32 inch below the surface of the bars. As the copper wears down, the harder mica forms ridges. To repair this condition the armature should be removed from the unit, the commutator resurfaced, and the mica undercut by a qualified repairman.

Do not use lubricants of any type on the commutator.

Collector Rings: These are two or three copper rings located at the end of the armature. Their surfaces should be kept highly polished by occasionally using a crocus cloth.

Bearing: There is only one bearing in these generators (some small models have none). It is a grease-sealed bearing and requires no further lubrication. If the bearing becomes worn or loose, replace it.

Disassembly: If it becomes necessary to recondition or replace the armature the field shell assambly must be removed as follows:

Loosen the nut on the end of the armature shaft and remove the fan. Also remove the brushes, and, as each brush is removed, remount the lead wire terminal to its original location so the wires will not be crossed. Remove the nuts from the stud bolts holding the field shell to the adaptor end bell. Use a hammer and chisel on any convenient place on the field frame to pry and separate it from the adapter end bell. After movement has been started, the entire field shell and brush rigging assembly can be removed.

The taper of the generator armature is accurately fitted to the taper on the engine crankshaft. In order to remove the armature, put the nut back on the through-bolt to protect the threads, and while pulling the armature outward with one hand strike the end of the through-bolt with a hammer. You may also tap the steel core of the armature to loosen it from the engine shaft.

ROUTINE ENGINE CARE

Study the engine manual supplied with your unit for more detailed information.

Oil: Always check the oil reservoir before starting the engine, as well as at the intervals specified in the engine instruction book. Do not add oil when operating the engine. Check lube oil level each time fuel is added.

Air filter: To clean the air filter, remove it, and wash it with gasoline. Allow it to dry; then dip it in clean engine oil, and shake out the excess. Fill it with light engine oil to the line indicated.

Gasoline: Use a good grade of regular gasoline. Be sure that the small vent hole in the gasoline tank cap is not clogged. When storing the unit, drain the gasoline from the tank and carburetor to avoid build-up of gum deposits.

MONTHLY PLANT SERVICE

Spark plugs: Clean and reset gap between electrodes to .025 gap. More frequent service may be required if leaded fuels are used.

Contact points: Contact points in the magneto system can be resurfaced by using an ignition file. (See Engine Manual for magneto service and tests).

Sediment bowl and screen: Clean them, and be sure the gasket is in good order.

Fuel line: Clean it by disconnecting the gasoline line at the carburetor. Blow through the gas line to clear it. Remove the shut off valve and clean the screen. Alcohol or acetone will dissolve any gummy deposits.

Exhaust system: Check it, and tighten and replace parts when necessary.

Battery: Make certain all connections are clean and tight. Keep the electrolyte level above the plates by adding clean distilled water. Do not over-fill.

For engine warranty and other engine service instructions, see Engine Manual.

TROUBLE SHOOTING CHART

PROBLEM	CHECK	SOLUTION
1. Sparking at the brushes:		
Too much load.	Check output voltage with a voltmeter to make sure it indicates voltage as marked on the nameplate.	Reduce the load.
Brushes not seated properly. Dirty brushes and commutator.	Remove brushes and check for uneven wear or dirt on brushes or commuator.	Clean commutator and seat brushes with sandpaper.
Rough or irregular commutator.	Check for uneven wear on commutator and brushes.	If slightly worn use fine sandpaper. If very rough, pitted, or irregular, have a repairman resurface the commutator.
Open armature.	Check to see if coil lead is disconnected or if coil is open.	Resolder coil lead or have a repairman service it.
Brushes sticking in the holders.	Check to see that brushes move freely in holders.	Clean brush holders and brushes.
DC brushes lose tension.	Remove and examine DC brushes to check if brush springs have collapsed.	Replace DC brushes. Tension loss was caused by a defective or low battery used to crank the generator.
2. Voltage too low:		
Low engine speed.	Check speed with tachometer.	Increase speed of engine by adjusting speed regulator.
Too much load.	Check output voltage with a voltmeter to make sure it indicates the voltage marked on the nameplate.	Reduce load.
Brushes not seated properly. Dirty brushes and commutator.	Remove brushes and check for uneven wear or dirt on brushes or commutator.	Clean commutator and seat brushes with sandpaper.
Open armature.	Check to see if coil lead is disconnected or if coil is open.	Resolder coil lead or have a repairman service it.
Grounded, open or shorted field winding.	Check for breaks or shorts in the field.	Open or shorted fields should be replaced. A grounded field may be repaired by insulating where the grounding occurs.
Brushes sticking in the holders.	Check to see that brushes move freely in holders.	Clean brush holders and brushes.
3. Voltage too high:		
High engine speed.	Check engine speed with a tachometer.	Reduce speed by adjusting speed regulator.
4. Generator overheating:		
Overloaded	Check output voltage with a voltmeter to make sure it indicates the voltage and current marked on the nameplate.	Reduce the load.
Armature striking on pole pieces.	Make sure the generator bearings are not worn out and check the alignment of the brackets.	Replace bearings and realign the brackets if necessary. Tighten all bolts.
Poor ventilation.	Check air space around generator.	Make sure there is at least a 2 foot clearance on all sides of generator.
Short circuit in the field.	Check for localized overheating.	Open or shorted fields should be replaced. A grounded field may be repaired by insulating where grounding occurs.
Short circuited armature.	Check for breaks in armature insulation and for dirt on commutator bars. Look for localized overheating.	Remove dirt and clean. Replace armature if necessary.

PROBLEM	CHECK	SOLUTION
5. Generator will not crank:		
	Check battery and battery connections. Check battery size. A minimum 70 amp-hour battery is required. Check start switch or solenoid by connecting heavy jumper across large terminals.	Have battery charged. Clean terminals and posts. Replace battery with adequate sized battery. Replace if defective.
Generator cranks but engine will not start.	Refer to engine instructions.	Refer to engine instructions.
6. Battery problems:		
Battery discharges when sitting idle:	Check reverse current diode with ohmmeter to determine if diode is shorted.	Replace defective reverse current diode.
Battery will not take a charge:	Examine charge resistor.	Replace, if defective. Solder connection if there is an open in the circuit.
	Put ammeter in series with battery.	Reverse current diode is evidently open and should be replaced.
7. Generator fails to generate:		
Weak residual magnetism.	Very low output voltage (½ volt) reading on a sensitive voltmeter.	Flash the field coils with a 6 volt automotive battery, a 12 volt automotive battery, or 2 "D" size flashlight batteries. Stop the generator and remove the end cover. You will note the positive (+) lead from the field coil is connected to the rectifier terminal with a red dot. The negative (—) lead from the field coil is connected to the grounded A.C. brush holder. The + lead should be connected to the + side of the battery, and the — lead should be connected to the — side of the battery for about 10 seconds.
Short circuited armature.	Check for breaks in armature insulation and for dirt on commutator bars.	Remove dirt and clean. Replace armature if necessary.
Grounded, open or shorted field winding.	Check for breaks or shorts in the field. Carefully inspect the hot side of the terminals for evidence of a grounded condition.	Open or shorted fields should be replaced. A grounded field may be repaired by insulating where grounding occurs.
Brushes do not make contact.	Remove each of the D.C. (commuator) brushes to be sure that they are clean and free in the holder. Examine the brush springs to be sure that they have several ounces of tension.	Replace brushes if necessary. Always replace with a complete set of brushes.
Shorted condenser	Disconnect lead wire from brush holder.	If generator produces current with the condenser wire disconnected, replace it.
Defective rectifier.	Check the rectifier by disconnecting one of the shunt field leads. Use an ohmmeter to measure the resistance of two adjacent terminals with the leads from the ohmmeter first connected one way and then reversed. One reading should show a high resistance and the other a low resistance. Continue around the terminals clockwise. If any diode does not read out correctly, replace the rectifier module. A grounded field will cause the rectifier to give false readings.	If you find the field is grounded, repair or replace it and repeat the check. The rectifier may not have been damaged and will not have to be replaced. The rectifier can also be checked by separately exciting the the field coils, as explained above. With this excitation, output on the generator should be 70 to 90 volts with no load applied.

PROBLEM	CHECK	SOLUTION
Generator fails to generate (cont.)		
Open circuits	First, check for broken wires or loose connections between the generator field and the control panel. Second, disconnect battery wires (if any) from the generator. Raise all brushes from commutator and/or collector rings. Disconnect field leads from terminals. Touch one field lead with a test lamp probe. Touch the other field lead with the wire lead from the battery. If the test lamp does not light, the field circuit is open. (See figure no. 1)	Get the unit repaired by a qualified electrician or consult your Katolight Distributor/Representative or the factory.
Grounds in Armature/Rotor	Disconnect battery and A-C wires from the generator. Raise all brushes from commutator and/or collector rings. Place one test lamp probe on the clean surface of the armature shaft. If the test lamp lights, the armature winding is grounded. (See figure no. 2).	Get the unit repaired by a qualified electrician or consult your Katolight Distributor/Representative or the factory.

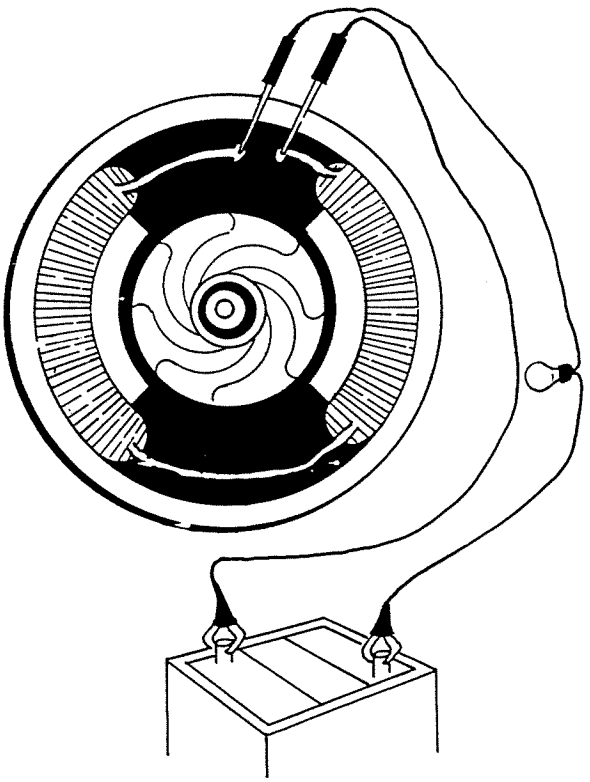

FIGURE 1

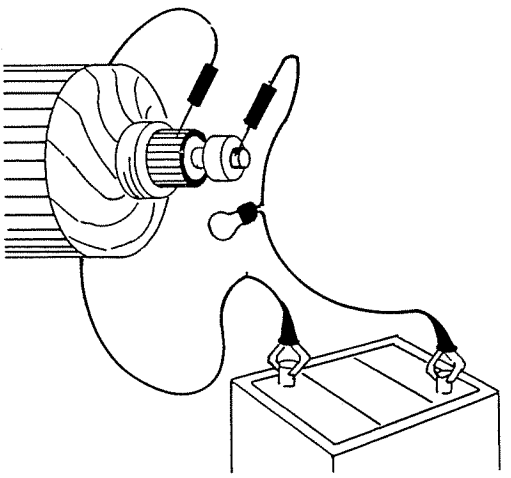

FIGURE 2

Testing for open circuits and grounds
(Make sure battery and bulb are of the same voltage)

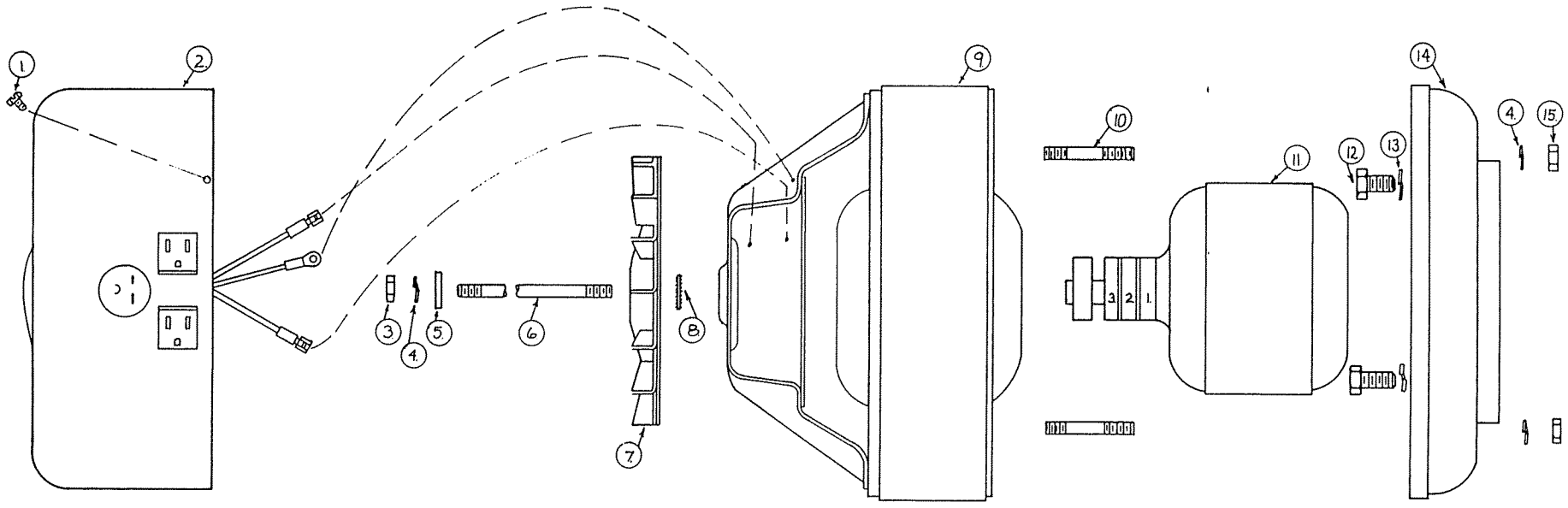

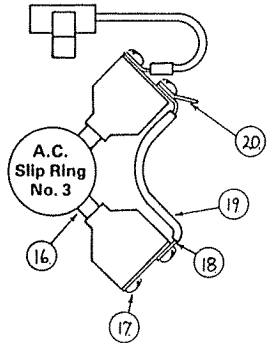

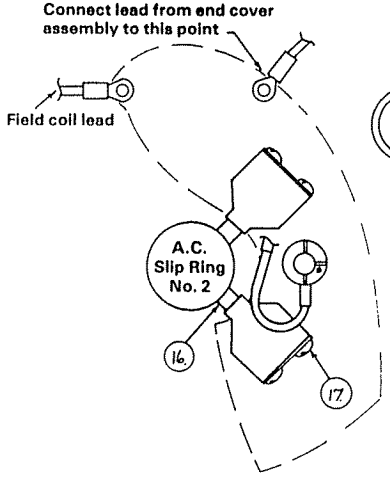

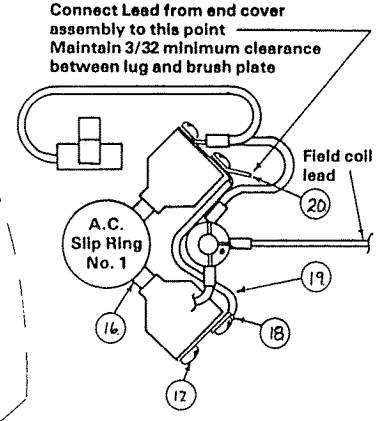

PARTS LIST			
ITEM	PART NO.	QTY.	DESCRIPTION
1	A-53644	2	Self Tapping Screw
2	C-55140	1	End Cover and Receptacle Assembly
3	23605	1	5/16 – 24 Hex Nut
4	480	5	5/16 Split Type Lockwasher
5	A-23558	1	Flat Washer
6	A-23197-2	1	Armature Thru-Bolt
7	B-55101	1	Fan Assembly
8	A-55224	1	5/16 Interior/Exterior Tooth Lockwasher
9	C-55375	1	Field Shell and Coil Assembly
10	A-23451	4	Stud
11	B-55106	1	Armature
12	3290	4	3/8 – 16 x 1 – 1/4 Hex Head Cap Screw
13	481	4	3/8 Split Type Lockwasher
14	C-54178	1	End Bracket
15	458	4	5/16 – 18 Hex Nut
16	A-23607	6	A. C. Brush
17	40746	12	8 – 32 x 5/16 Bd. Head Mach. Screw
18	A-41387-7	2	Copper Strap
19	A-46024-3	2	Insulation Sleeving
20	A-53643	2	Terminal Lug Adapter

GENERATOR PARTS UNASSEMBLED

PARTS ORDERING INSTRUCTIONS

To avoid errors or delay in filling your parts order, please furnish the following information.

1. Always give model number, type number, and serial number.
2. Give the item part number and description. Give the quantity required of each item. Do not order by reference number or group number. If an old part cannot be identified return the part postage prepaid to your distributor or Katolight Corporation with a letter stating the reason for returning the part.

PARTS LISTS

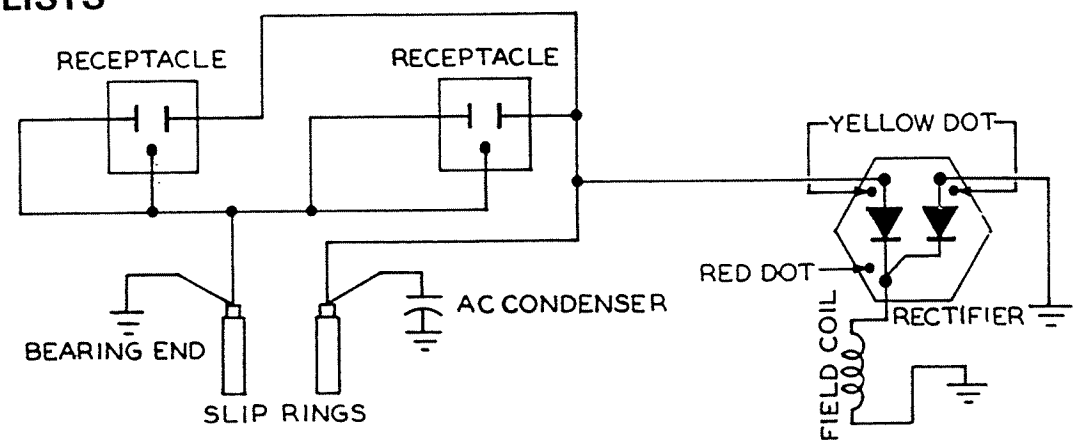

SCHEMATIC
MODEL 2HAB3
MANUAL START

PARTS LIST MODEL 2HAB3

Generator Code
109D2P-IN

DESCRIPTION	MODEL	QTY.
Field shell stud nut	638	3
Stud nut lockwasher	479	3
End bracket	43887	1
Armature	55275-1	1
Bearing	55223	1
Screw - Brush	40746	8
Brush	23607	4
Brush holder	23500	4
Field shell stud	23817	3
Field shell & bracket	53580	1
Pole shoe	23806	2
Brush rack	55091	1
Field coil top	53639-1	1
A. C. condenser	54977	1
Machine screw brush holder	23598	4
Fan	54976	1
End cover	55304	1
Armature nut	23605	1
Armature lockwasher	480	5

Engine
Briggs & Stratton 130232

DESCRIPTION	MODEL	QTY.
Armature flat washer	23558	1
Armature thru bolt	23197-5	1
Fan lockwasher	55224	1
Screw - Brush rack mounting	420	3
Hex nut - Brush rack	456	4
Lockwasher	22423	4
Pole shoe retainer	53577	2
Machine screw	6402	1
Pole shoe screw	1743	2
Field coil bottom	53639	1
Cap screw	55576	4
Lockwasher	480	5
Rectifier	54976	1
Receptacle	53636	2
Terminal connector	53643	1
Machine screw	42482	4
Lock washer	480	6
Hex nut	458	6

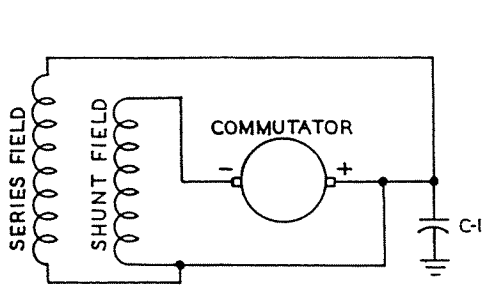

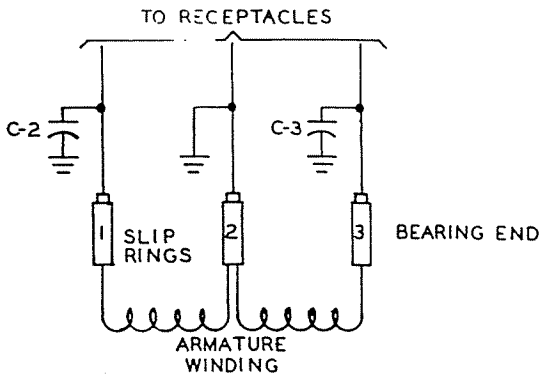

SCHEMATIC
FOR MODELS 3.5HFB3 & 5HFB3
MANUAL START

PARTS LIST MODEL 3.5HFB3

Generator Code
305D2P-3N

DESCRIPTION	PART NO.	QTY.
Armature	55106-1	1
Armature bearing	55223	1
Armature thru bolt	23197-2	1
Fan assembly	55101	1
Fan washer	23558	1
Fan lockwasher	55224	1
Fan nut	23605	1
Field coil	55378	1
Field coil	55378-1	1
Shell and bracket assembly	53722	1
Pole shoe	24851	2
Pole shoe retainer	24849	2
Engine adaptor bracket	54178	1

Engine
Briggs and Stratton 190432

DESCRIPTION	PART NO.	QTY.
Adaptor bracket screw	3290	4
End cover assembly	55140	1
End cover receptacle	53636	2
End cover receptacle (230 Volts)	55253	1
Brush rack assembly	55247	1
(Complete)	& -1	1
A. C. brush	23607	6
A. C. brush holder	23500	6
Brush holder plate	55107	1
A. C. condenser	54977	1
A. C. condenser	41221	1
Rectifier (Excitation)	54976	1

PARTS LIST MODEL 5HFB3

Generator Code
503TD2P-3N

DESCRIPTION	PART NO.	QTY.
Armature	55318-1	1
Armature bearing	55223	1
Armature thru bolt	23197-7	1
Fan assembly	55101	1
Fan washer	23558	1
Fan lockwasher	55224	1
Fan nut	23605	1
Field coil	55361	1
Field coil	55361-1	1
Shell and bracket assembly	55417	1
Pole shoe	23207	2

Engine
Briggs & Stratton 252412

DESCRIPTION	PART NO.	QTY.
Pole shoe retainer	23208	2
Engine adaptor bracket	54025	1
Adaptor bracket screw	54028	4
End cover assembly	55140	1
End cover receptacle	53636	2
End cover receptacle	55253	1
Brush rack assembly (Complete)	55247	1
A. C. brush	23607	6
A. C. brush holder	23500	6
Brush holder plate	55107	1
A. C. condenser	41221	2
Rectifier (Excitation)	54976	1

PARTS LIST MODEL 3.5HFB3E

Generator Code 305D2P-3C

DESCRIPTION	PART NO.	QTY.
Armature	55309-1	1
Armature bearing	55223	1
Armature thru bolt	23197-2	1
Fan assembly	51011	1
Fan washer	23558	1
Fan lockwasher	55224	1
Fan nut	23605	1
Field coil	55391	1
Field coil	55391-1	1
Shell and bracket assembly	53722	1
Pole shoe	24851	2
Pole shoe retainer	24849	2
Engine adaptor bracket	54178	1
Adaptor bracket screw	3290	4
End cover assembly	55367	1

Engine Briggs & Stratton 190432

DESCRIPTION	PART NO.	QTY.
End cover receptacle	53636	2
End cover receptacle (230 Volts)	55253	1
Brush rack assembly	55392	1
(Complete)	& -1	1
A. C. brush	23607	6
A. C. brush holder	23500	6
D. C. brush	41393	2
D. C. brush holder	41744	1
and Plate assembly	& -1	1
A. C. condenser	41221	2
D. C. condenser	41180	1
Resistor (charge)	24236	1
Start switch	2210	1
Heat sink	54733	1

PARTS LIST MODEL 5HFB3E

Generator Code 503TD2P-3C

DESCRIPTION	PART NO.	QTY
Armature	55317	1
Armature bearing	55223	1
Armature thru bolt	23197-7	1
Fan assembly	55101	1
Fan washer	23558	1
Fan lockwasher	55224	1
Fan nut	23605	1
Field coil	55422	1
Field coil	55422-1	1
Shell & bracket assembly	55417	1
Pole shoe	23207	2
Pole shoe retainer	23208	2
Engine adaptor bracket	54025	1
Adaptor bracket screw	54028	4

Engine Briggs & Stratton 252412

DESCRIPTION	PART NO.	QTY
End cover assembly	55368	1
End cover receptacle	53636	2
End cover receptacle	55253	1
Brush rack assembly	55423	1
(Complete)	& -1	1
A. C. brush	23607	6
A. C. brush holder	23500	6
D. C. brush	41393	2
D. C. brush holder	41744	1
& Plate assembly	& -1	1
A. C. condenser	41221	2
D. C. condenser	41180	1
Resistor (charge)	55425	1
Start switch	2210	1

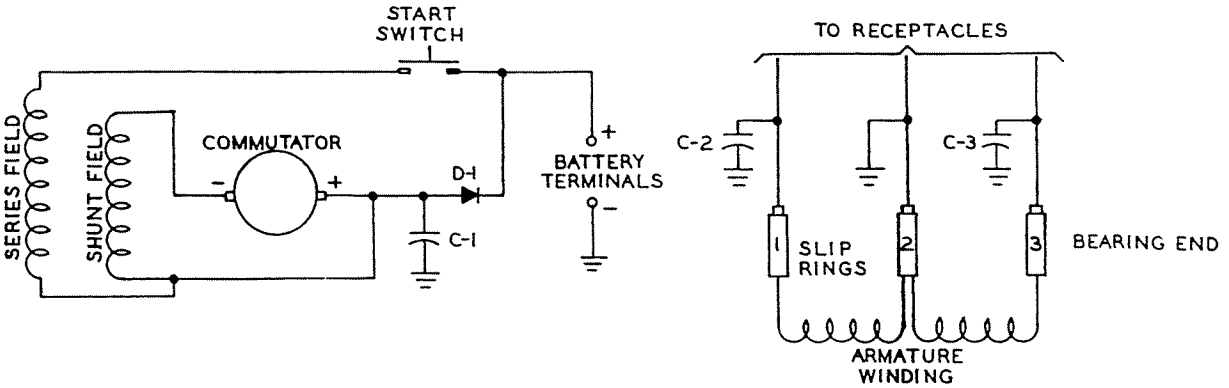

SCHEMATIC
FOR MODELS 3.5HFB3E & 5HFB3E
ELECTRIC START

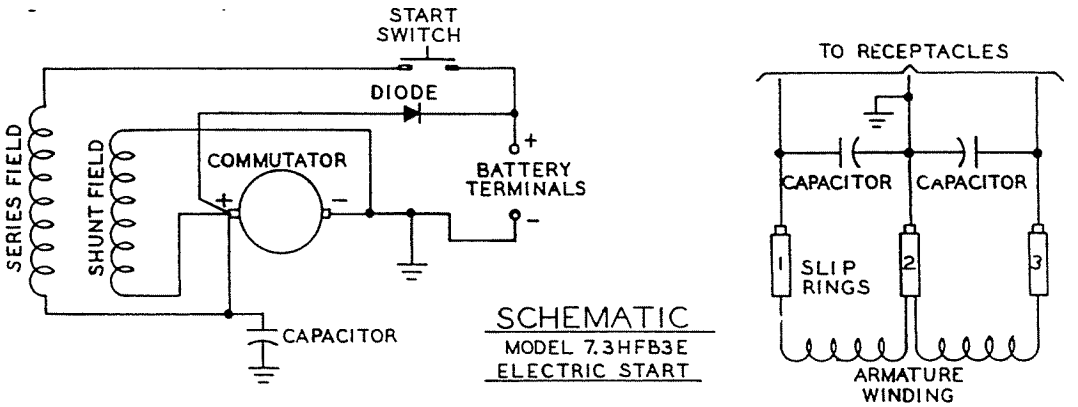

SCHEMATIC
MODEL 7.3HFB3E
ELECTRIC START

PARTS LIST MODEL 7.5HFW3E

Generator Code
703D2G-3C

DESCRIPTION	PART NO.	QTY
Armature	54993-1	1
Armature bearing	50215	1
Armature thru bolt	24185	1
Fan assembly	23404	1
Fan washer	23558	1
Fan lockwasher	40552	1
Fan nut	23605	1
Field coil	54994	1
Field coil	54994-1	1
Shell & bracket assembly	55008	1
Pole shoe	42882	2
Pole shoe retainer	51697	2
Engine adaptor bracket	55493	1
Adaptor bracket screw	23604	4
End cover assembly	55007	1
Brush rack assembly	52374	1
(Complete)	& -1	1
A. C. brush	55536	9
A. C. brush holder	23500	9
D. C. brush	47683	2

Engine
Wisconsin S14-D

DESCRIPTION	PART NO.	QTY
D. C. brush holder	47684	1
& plate assembly	& -1	1
A. C. condenser	41221	2
D. C. condenser	41180	1
Control box assembly	C-58099	1
Cover	C-51580	1
Front panel	C-58097	1
Rear panel (Bare)	C-58098	1
30 amp, 250 VAC receptacle	A-57324	1
20 amp, 125 VAC receptacle	B-58138	1
30 amp, 125 VAC receptacle	A-56359	1
20 amp, 250 VAC receptacle	A-56281	1
20 amp, 125 VAC receptacle	A-56279	1
30 amp fuse	A-21708	2
20 amp fuse	A-20577	3
Start Solenoid	A-24061	1
Start Switch	A-23772	1
Charge control resistors	A-54599	2
Charging circuit diode	A-54023-1	1

BILL OF MATERIAL

ITEM	QUANTITY	DESCRIPTION
A	1	Carrying frame
B	2	Handles
C	1	Support bracket
D	2	Angle
E	1	Axle
F	2	Tires 10 x 2.75
G	8	Bolts 5/16 x 2 1/2
H	4	Bolts 5/16 x 1 3/4
J	2	Bolts 7/32 x 1 5/8
K	12	5/16 Hex nuts & Lockwashers
L	2	7/32 Hex nuts & Lockwashers
M	2	Cotter pins 3/32
N	2	Rubber mounts

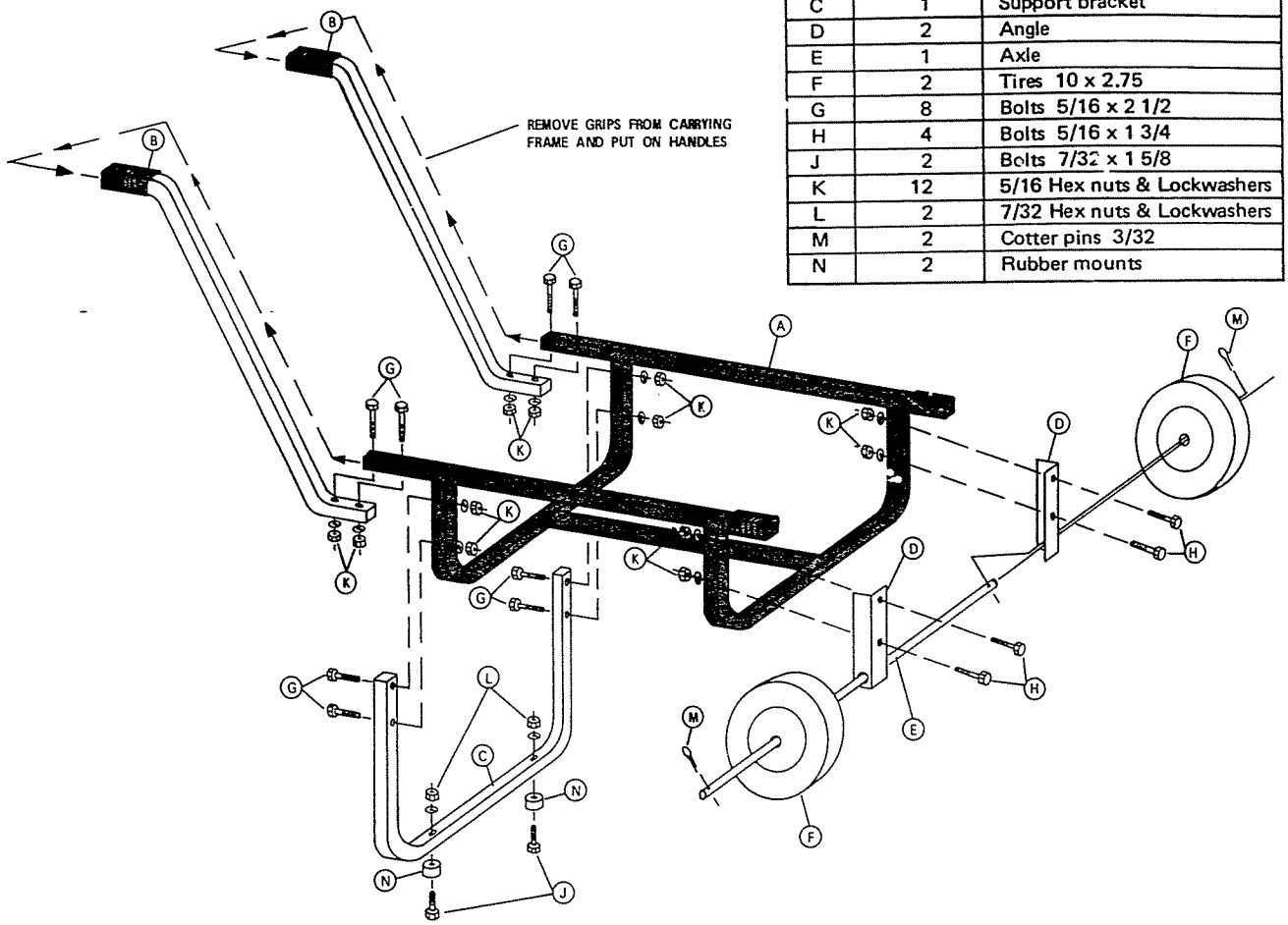

INSTALLATION OF TWO WHEELED DOLLY

TWO-WHEEL DOLLY

Katolight Portable Power plants come equipped with a carrying frame. A two-wheeled dolly is available as an optional accessory.

NOTE

Katolight Portable Units are also available with protective weatherproof housing complete with battery rack and instrument panel.

WARRANTY

Katolight warrants to the original purchaser that the product delivered herewith, so far as it has been manufactured, engineered or assembled by Katolight, is free from defects in material and workmanship, and will perform under normal use and service for a period of one year from date of shipment from Katolight, or 200 hours of actual operation, whichever occurs first.

The liability of Katolight under the Warranty specified herein shall be limited to the replacement or repair of the product, at the option of Katolight, without charge, F.O.B., Mankato, Minnesota. This Warranty does not obligate Katolight to bear the cost of labor or transportation charges in connection with the repair or replacement of defective products, nor shall it apply to a product upon which modifications, repairs or alterations have been made. This Warranty shall apply only when the equipment or product has been properly installed, serviced and operated under normal conditions, in accordance with the instructions provided for the specific unit.

Katolight shall not be liable for any claim greater in amount than the purchase price of the product, in respect of which such claim is made, and in no event shall Katolight be liable for any special, indirect or consequential damages.

THERE ARE NO EXPRESS WARRANTIES OTHER THAN THOSE DESCRIBED HEREIN, NO WARRANTIES SHALL BE IMPLIED OR OTHERWISE CREATED UNDER THE UNIFORM COMMERCIAL CODE, INCLUDING, BUT NOT LIMITED TO, A WARRANTY OF MERCHANTABILITY, AND A WARRANTY OF FITNESS FOR A PARTICULAR PURPOSE.

OPERATING INSTRUCTIONS & SERVICE INFORMATION

FOR KATOLIGHT PORTABLE POWER PLANTS

Read this book before operating the plant and save for future reference.

Write the Model number, Type number and Serial number of the generator in the spaces below. Be sure to give these numbers when ordering parts or corresponding about the generator.

Generator Model	Type	Serial

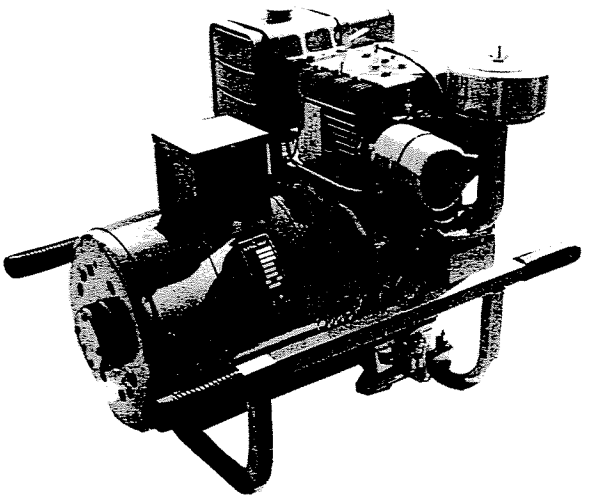

KATOLIGHT CORPORATION

MANKATO, MINNESOTA – 56001 – Phone 507-387-7973

Form AD1/1-1170

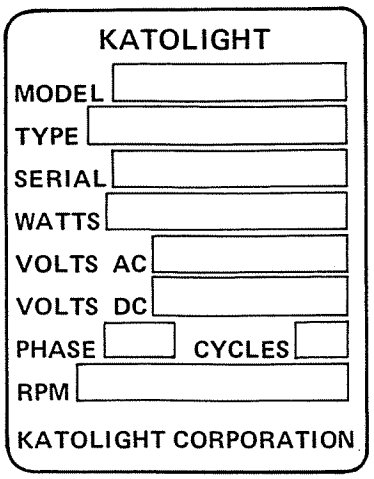

GENERATOR DATA

Important data pertinent to your generator set is given on the nameplate attached to your electrical power plant. For handy reference copy your plant nameplate information in the spaces to the side of this paragraph. Additional information is contained in Tables A and B. FOR SATISFACTORY OPERATION GENERATOR MUST BE RUN AT SPEED (RPM) GIVEN ON NAMEPLATE AND LOAD SHOULD NOT EXCEED WATTS GIVEN ON NAMEPLATE. ON 115/230 VOLT APPLICATIONS LOAD UNBALANCE SHOULD NOT EXCEED 10 PERCENT.

TABLE A MODEL DESCRIPTION CHART
3600 RPM, 60 CYCLE, KATOLIGHT PORTABLE POWER PLANTS

MODEL NUMBER	TYPE NUMBER	WATTS	VOLTS	WIRE	ENGINE	MODEL	TYPE START	TYPE COUPLING
2HAB3	11190	2000	115	2	B & S	146432	REWIND	TAPERED SHAFT
3HAB3	11286	3000	115	2	B & S	146432	REWIND	TAPERED SHAFT
3HAB3E	14817	3000	115	2	B & S	146432	ELECTRIC LOCAL	TAPERED SHAFT
3HAB3ER	14817	3000	115	2	B & S	146432	ELECTRIC REMOTE & LOCAL	TAPERED SHAFT
3HFB3	13938	3000	115/230	3	B & S	146432	REWIND	TAPERED SHAFT
3HFB3E	14378	3000	115/230	3	B & S	146432	ELECTRIC LOCAL	TAPERED SHAFT
3HFB3ER	14378	3000	115/230	3	B & S	146432	ELECTRIC REMOTE & LOCAL	TAPERED SHAFT
4HFB3	11192	4000	115/230	3	B & S	233431	ROPE	CLOSE COUPLED
4HFB3E	11192	4000	115/230	3	B & S	233431	ELECTRIC LOCAL	CLOSE COUPLED
4HFB3ER	11192	4000	115/230	3	B & S	233431	ELECTRIC REMOTE & LOCAL	CLOSE COUPLED
5HFW3E	14150	5000	115/230	3	WISC.	S-12D	ELECTRIC	CLOSE COUPLED
5HFW3ER	14150	5000	115/230	3	WISC.	S-12D	ELECTRIC REMOTE & LOCAL	CLOSE COUPLED

TABLE B MODEL DESCRIPTION CHART
1800 RPM, 60 CYCLE, KATOLIGHT PORTABLE POWER PLANTS

MODEL NUMBER	TYPE NUMBER	WATTS	VOLTS	WIRE	ENGINE	MODEL	TYPE START	TYPE COUPLING
2.5HAB4	15459	2500	115	2	B & S	233431	ROPE	CLOSE COUPLED
2.5HAB4E	15368	2500	115	2	B & S	233431	ELECTRIC LOCAL	CLOSE COUPLED
2.5HAB4ER	15368	2500	115	2	B & S	233431	ELECTRIC REMOTE & LOCAL	CLOSE COUPLED
6.5HDW4E	11307	6500	115/230	4	WISC.	TJD	ELECTRIC LOCAL	CLOSE COUPLED
6.5HDW4ER	11307	6500	115/230	4	WISC.	TJD	ELECTRIC REMOTE & LOCAL	CLOSE COUPLED

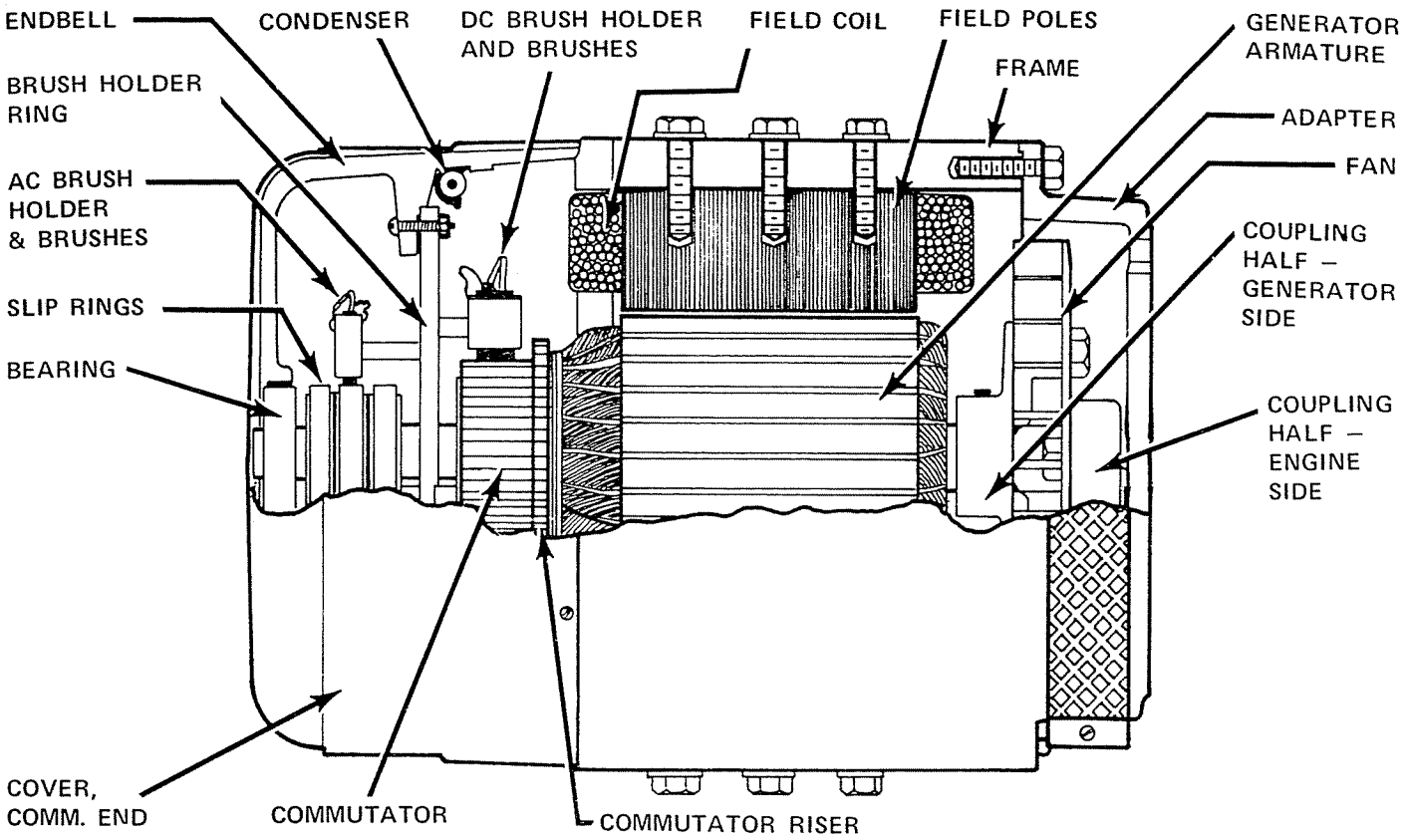

FIGURE 1 CUT-AWAY VIEW, CLOSE COUPLED TYPE REVOLVING ARMATURE GENERATOR

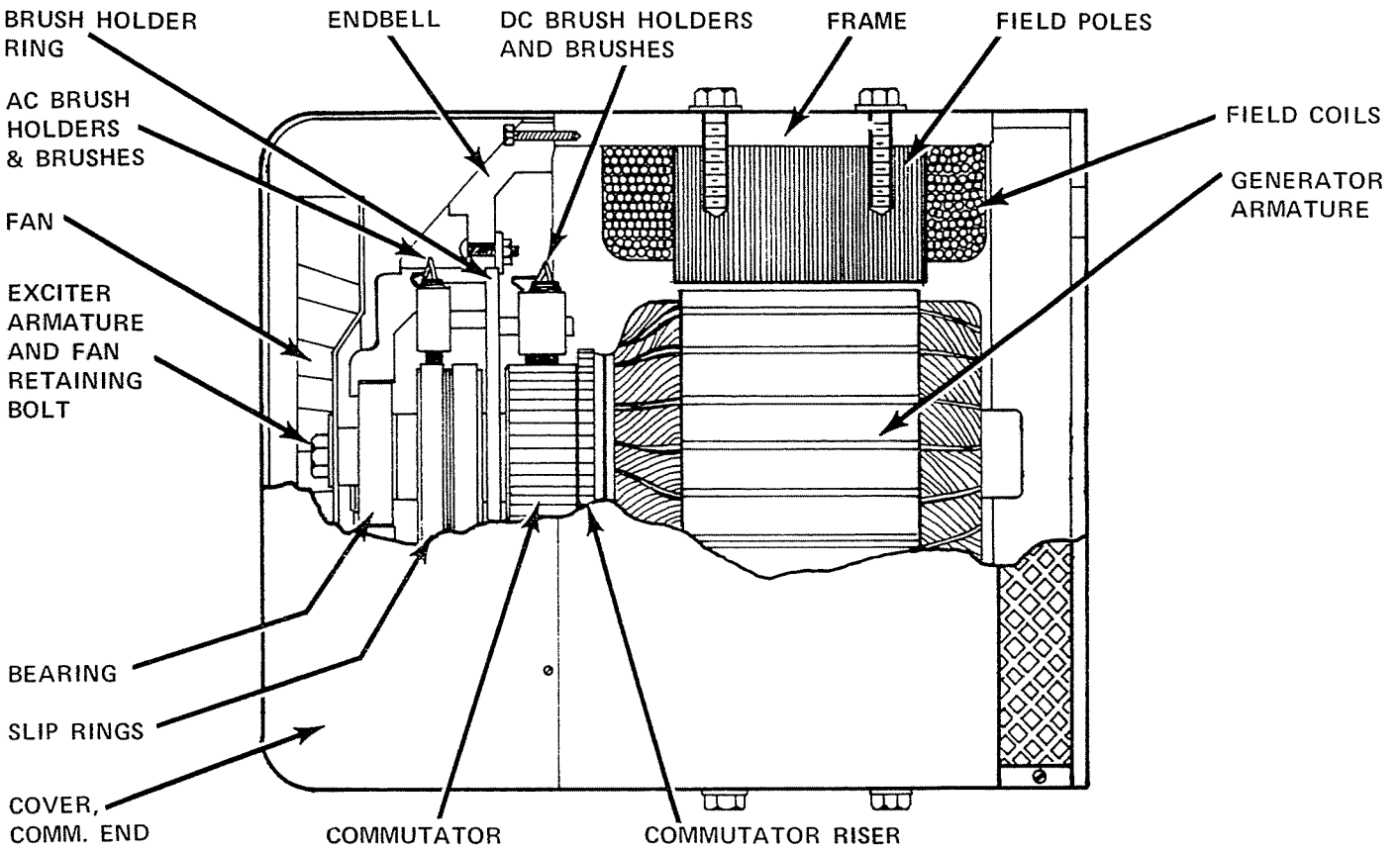

FIGURE 2 CUT-AWAY VIEW, TAPERED SHAFT TYPE REVOLVING ARMATURE GENERATOR

GENERAL INFORMATION

INTRODUCTION

Before any KATOLIGHT Power Plant is shipped from the factory the generator is inspected and tested for performance. No unit is shipped unless it produces its rated capacity. When unpacking the machine, inspect it carefully to see that no damage occurred in transit. If damage is noted, notify the transportation company immediately giving complete details as to the nature of the damage. Units are generally shipped with no lubrication in the engine crankcase and oil bath filters. Before placing unit in operation fill with lubricating oil as described in the engine manufacturers instructions.

If upon installation a new generator does not work properly, check all electrical connections and the generator speed before concluding the generator is defective. Observe the following precautions whenever operating the unit.

OPERATING PRECAUTIONS

Please follow the precautions listed below whenever operating your Power Plant.

CAUTION

PROVIDE SUFFICIENT VENTILATION. DO NOT OPERATE ENGINE IN ENCLOSED AREA. EXHAUST GASES CONTAIN CARBON MONOXIDE, AN ODORLESS DEADLY POISON.

STOP PLANT BEFORE FILLING WITH GASOLINE. AVOID SPILLING GAS ON HOT ENGINE, A FIRE AND SERIOUS INJURY COULD OCCUR.

IN APPLICATIONS WHERE GENERATOR IS CONNECTED TO SERVICE NORMALLY SUPPLIED BY COMMERCIAL POWER, INSTALL A MANUAL OR AUTOMATIC TRANSFER SWITCH. FAILURE TO OBSERVE THIS PRECAUTION COULD RESULT IN ELECTROCUTION OF PERSONNEL SERVICING COMMERCIAL POWER LINES.

AVOID EXPOSURE TO GENERATOR VOLTAGE. WHENEVER MAKING ELECTRICAL CONNECTIONS OR REPAIRING GENERATOR, FIRST STOP PLANT. FAILURE TO OBSERVE THIS PRECAUTION COULD RESULT IN ELECTROCUTION.

PARTS ORDERING INSTRUCTIONS

To avoid errors or delay in filling your parts order, please furnish the following information.

1. Always give MODEL NUMBER, TYPE NUMBER and SERIAL NUMBER.
2. Give the item part number and description. Give the quantity required of each item. DO NOT ORDER BY REFERENCE NUMBER OR GROUP NUMBER. If an old part cannot be identified return the part postage prepaid to your distributor or KATOLIGHT CORPORATION. Write a letter to the same address stating the reason for returning the part.

LOCATION

Provide sufficient ventilation. Do not operate the Power Plant in an enclosed area unless the engine exhaust gases are "piped" outdoors and there are no leaks in the exhaust system.

For best service the following factors should be taken into consideration;

1. Dirt: Foreign material such as dust, lint and abrasive particles cause excessive wear of bearings, brushes, etc. These materials will also clog the ventilation holes and cause excessive heating.
2. Moisture: All electrical equipment should be protected from excessive moisture. Excessive moisture could result in short circuits and grounds.

If the unit is to be left in the open, it should be covered whenever it is not in use. Ventilating ports should be cleaned periodically.

NOTE

KATOLIGHT Portable Units are also available with protective weatherproof housing complete with battery rack and instrument panel as illustrated for a small additional investment.

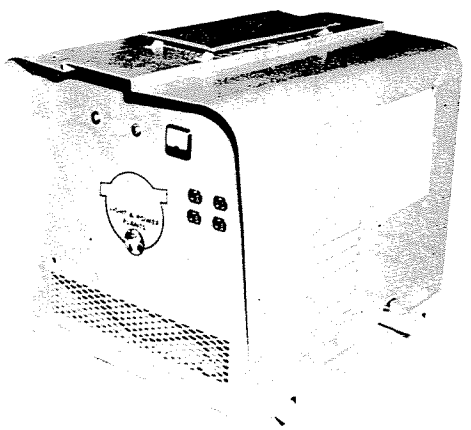

FIGURE 3 GENERATOR SET ENCLOSURE

BILL OF MATERIAL		
ITEM	QUANTITY	DESCRIPTION
A	1	CARRYING FRAME
B	2	HANDLES
C	1	SUPPORT BRACKET
D	2	ANGLE
E	1	AXLE
F	2	TIRES 10 x 2.75
G	8	BOLTS $^{5}/_{16}$ x 2½
H	4	BOLTS $^{5}/_{16}$ x 1½
J	2	BOLTS $^{3}/_{32}$ x 1¾
K	12	$^{5}/_{16}$ HEX NUTS & LOCKWASHERS
L	2	$^{3}/_{32}$ HEX NUTS & LOCKWASHERS
M	2	COTTER PINS $^{3}/_{32}$
N	2	RUBBER MOUNTS

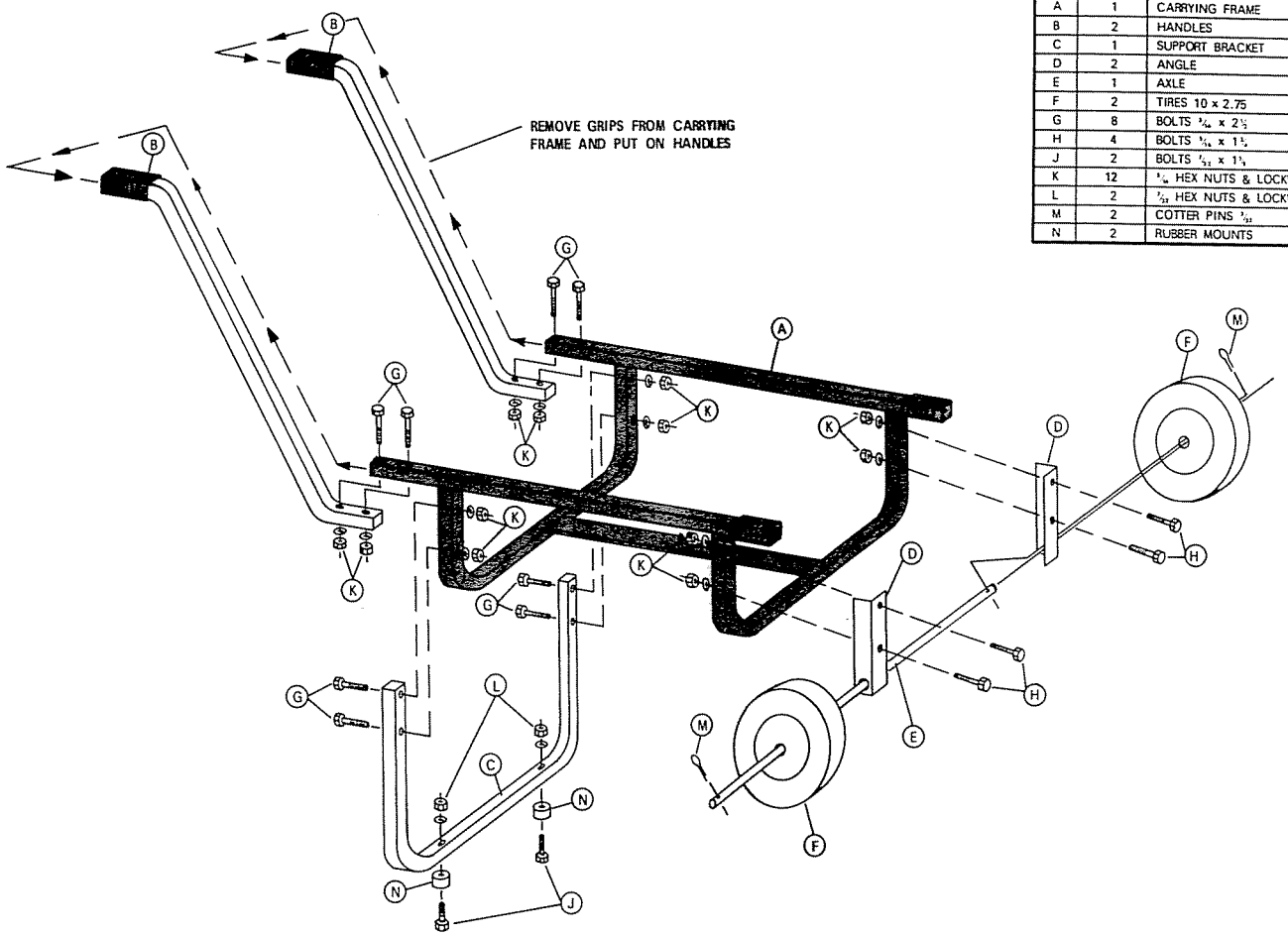

FIGURE 4 INSTALLATION OF 2 WHEEL DOLLY

INSTALLATION OF TWO-WHEEL DOLLY

KATOLIGHT Portable Power Plants come equipped with a carrying frame. A two-wheel dolly is available as an optional accessory. Figure 4 illustrates how parts comprising the dolly are attached to the carrying frame.

USE OF ELECTRIC MOTORS

Electric motors require much more current to start than to run. Most fractional horsepower motors take about the same amount of current to run them whether they are of the Repulsion-Induction, Capacitor, or Split-Phase type. Starting current, however, varies greatly. Repulsion-Induction motors are the easiest to start and usually require 1½ to 2½ times as much current to start as to run them. Capacitor motors usually require 2 to 4 times as much current to start them as to run them. Split-Phase motors are hardest to start with starting current about 5 to 7 times the running current.

The chart below shows the approximate current required to start and run 115 Volt, 60 Cycle motors under average load conditions such as a fan or blower. If the electric motor is connected to a hard starting load such as an air compressor it will require more starting current.

TABLE C
TYPICAL RUNNING AND STARTING CURRENT
FOR 115 VOLT, 60 Hz, SINGLE PHASE MOTORS

Horsepower	Running Amps All Types	Starting Amperes		
		Repulsion-Induction	Capacitor	Split-Phase
1/16	3.2	5 to 8	6 to 13	16 to 22
1/4	4.5	7 to 12	9 to 18	22 to 32
1/3	5.2	8 to 17	10 to 21	26 to 35
1/2	7.2	11 to 18	14 to 29	
1	13	20 to 33	26 to 52	

NOTE

IN APPLICATIONS WHERE SEVERAL MOTORS ARE TO BE STARTED EXCESSIVE OVERLOAD MAY BE AVOIDED BY STARTING THEM ONE AT A TIME, STARTING THE MOTOR THAT REQUIRES HIGHEST RUNNING AND STARTING CURRENT FIRST.

DETERMINING LOAD

The load can be determined by adding the wattage requirements for each light, appliance and motor which will be operated by the power plant. The following chart lists approximate watts required for various electrical appliances.

TABLE D

APPROXIMATE WATTS REQUIRED FOR ELECTRICAL APPLIANCES

APPLIANCE	WATTS
Lamp Bulbs	See Wattage on bulbs
Radio	40 - 200
Television	150 - 300
Vacuum Cleaner	200 - 250
Automatic Washer	400
Air Conditioner (¾ Ton)	1,250
Refigerator	325
Food Freezer	300
Furnace (Oil)	700
Deep Well Pump	2,000
Electric Range	600 - 10,000
Hot Plate (per burner)	600 - 1,200
Toaster	600 - 1,130
Water Heater	1,500 - 5,000
Glow Heater	600 - 1,200
Heating Pad	40 - 80
Sun Lamp	250 - 1,000
Flat Iron	600 - 1,200
Laundry Dryer	4,750
Electric Heat System	5,000 - 20,000

CONNECTING THE LOAD

These generators are supplied with various outlet and control boxes including units equipped with receptacles, meters and remote control stations. Generator lead wires terminate in lug type connectors in the outlet box. Always connect generator to the load as follows:

1. Follow the electrical connection drawings included as supplementary sheets with this manual. Should the drawings become lost, contact KATOLIGHT CORPORATION for additional copies stating the generator model, type and serial numbers.
2. Provide Fuse Protection: Generator should be protected with fuses or circuit breakers in accordance with the National Electrical Code and pertinent stat and local electrical codes.
3. Observe Nameplate Rating: Determine the load in amperes or watts. Load should not exceed the rating stamped on the generator set data plate. An overload could result in overheating and insulation breakdown.
4. Any generator which is installed for standby or emergency power must be equipped with a double throw switch for use when the power line fails. The switch transfers the load from the power line to the generator.

When the transfer switch is thrown to the "standby" side, the generator is connected to the load but the load is disconnected from the power line. Consequently no electricity produced by the generator can feed back to the power line where it would be hazardous to line repairmen.

PRECAUTIONS PRIOR TO INITIAL STARTING

Before starting the generator set for the first time the unit should be inspected as follows:

1. Check electrical connections to load. Refer to electrical connection diagrams supplied as supplementary information with this booklet.
2. Add fuel in engine tank, oil in crankcase. On models where oil bath air cleaners are used, add oil to filter. Refer to engine manufacturer's instructions.
3. Remove spark plug wires and ground them to the frame. Then turn the armature to see that it turns freely.
4. Check brushes to see that they are seated firmly on the commutator and slip rings and that they move freely in their holders.
5. Check the engine in accordance with engine manufacturer's instructions.

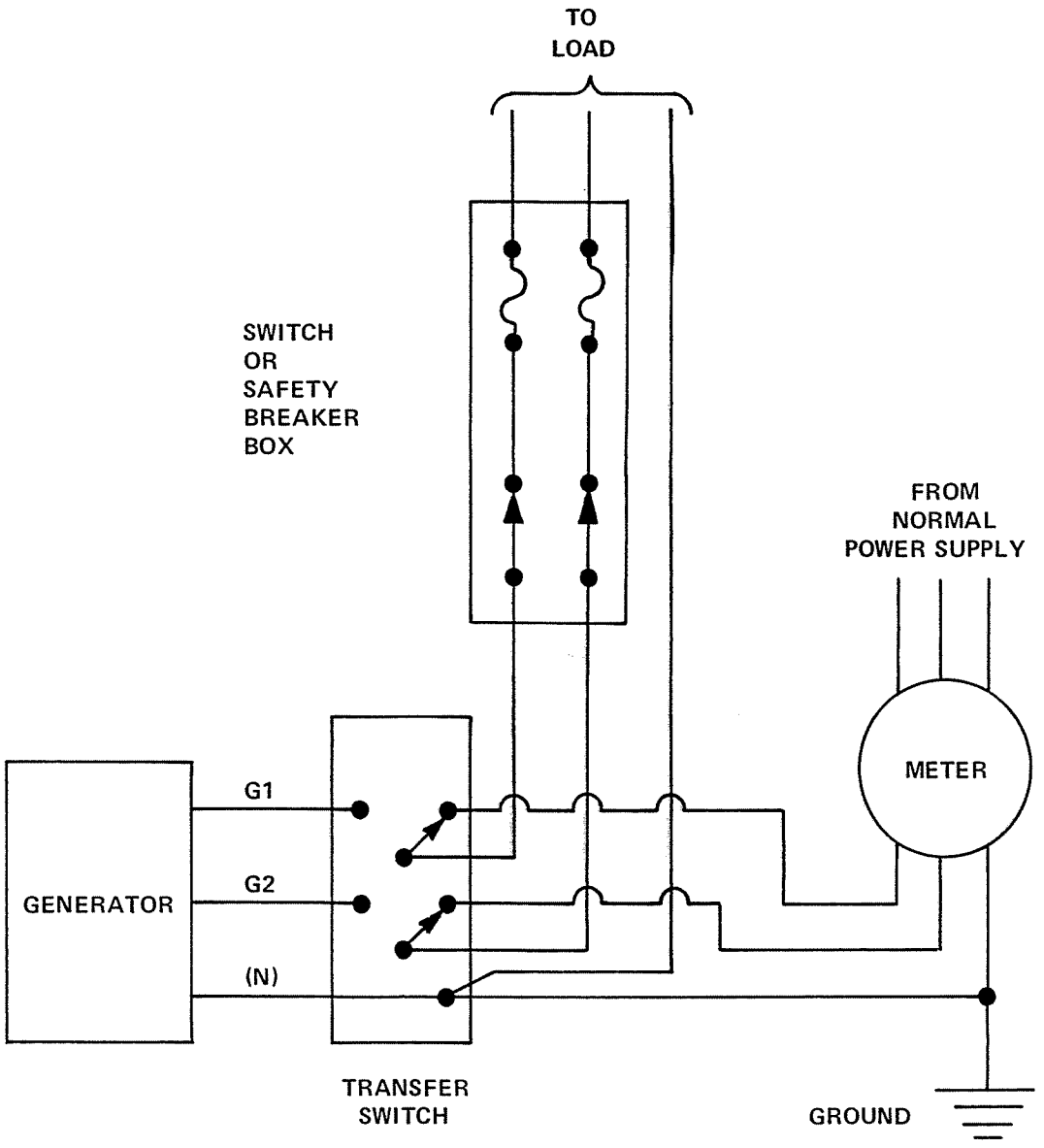

FIGURE 5 TYPICAL STANDBY EMERGENCY POWER INSTALLATION FOR SINGLE PHASE, 115/230 VOLT, THREE WIRE SERVICE WITH SOLID NEUTRAL

MAINTENANCE

MAINTENANCE

Brushes – Check the brushes for wear every few hundred hours of operation. They should be replaced when worn down to approximately 1/3 their original length. New brushes should be seated using fine sandpaper. (Do not use emery cloth). At least 80% of the brush surface should contact the commutator and slip ring surface. Whenever replacing brushes or removing them for service work, remove them one at a time and put the screw back into the brush holder. Excessive brush sparking and poor commutation can result from worn or dirty brushes, worn or dirty commutator and sliprings or poorly seated brushes. Improper brush spring tension can also cause poor commutation. Spring tension of about 4 pounds per inch of brush surface is normal.

Commutator and Slip Rings – If the commutator or slip rings get dirty or rough they can be cleaned with fine sandpaper. (Do not use emery cloth).

Bearings – All ball bearings used in these generators are packed with grease before assembly – no periodic greasing is required. If they become worn or rough they should be replaced. The replacement bearing should always be located on the shaft at exactly the same distance from the end of the shaft as the original bearing. Remove bearing using a puller. Tap replacement bearings onto shaft with a fiber or soft metal pipe that applies pressure to the bearing inner ring – never apply pressure on the outer ring. Heating the bearing before installation will make it slide more easily onto the shaft. A clean temperature controlled oven may be used, the temperature setting should not exceed 250 degrees F.

RESTORING RESIDUAL MAGNETISM

Residual magnetism can be restored by momentarily flashing the field with 6 to 12 VDC. The battery (+) lead must be connected to the lead wire on the positive DC brush and battery (–) lead must be connected to the lead wire on the negative DC brush. A reversal of battery polarity would result in reversal of field polarity.

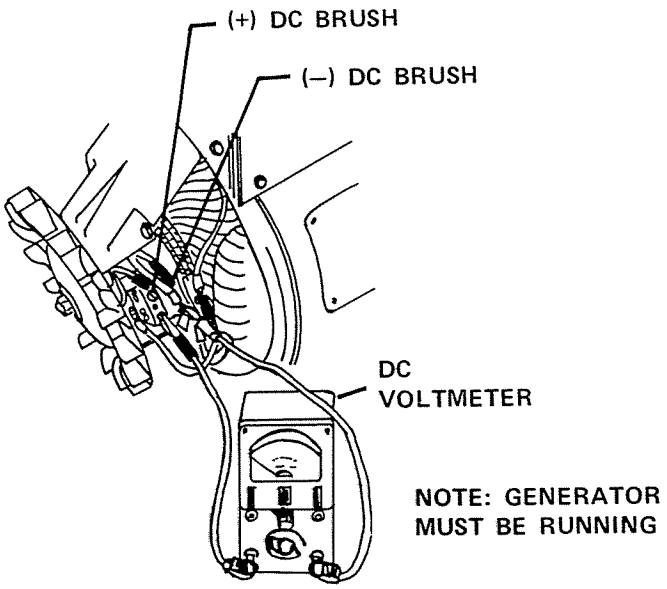

FIGURE 6 CHECKING EXCITATION VOLTAGE

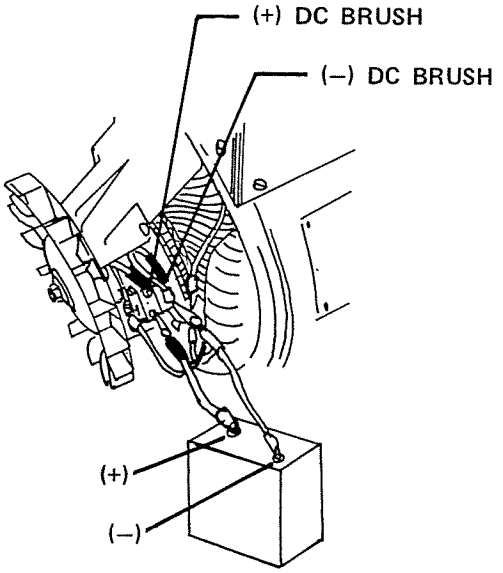

FIGURE 7 FLASHING FIELD

DISASSEMBLING AND ASSEMBLING GENERATOR

Two types of generators are described in this manual – a "close coupled" type and a "tapered shaft" type. The frame of both types is held to the engine by bolts inserted from the generator side into the engine block.

The close coupled type illustrated in Figure 1 utilizes a coupling which is bolted together. One half of the coupling is pressed onto the generator shaft and the other half onto the engine shaft. A cooling fan is installed between the two coupling halves. The generator armature is removed from the engine by removing the bolts which hold the coupling halves together.

The armature of the tapered shaft type illustrated in Figure 2 is held to the engine shaft by a bolt which passes through the center of the generator shaft and threads into the engine shaft. The tapered portion of the engine shaft locks into a tapered hole in the generator shaft.

The following procedures should be followed when assembling or disassembling either type.

1. Before starting to disassemble the generator or remove it from the engine raise the DC and AC brushes in their brush holders clear of the commutator and slip rings.

2. Disconnect wires one - at - a - time, tagging both the wire and its connection point.

3. Do not loosen and move the brush holder ring or the DC brush holders if these items do not require replacement. They were set at electrical neutral position at the factory.

4. If couplings are removed form either the generator shaft or engine shaft, reinstall couplings the same distance onto shafts as original couplings.

5. If bearings are replaced, the new bearing must be the same distance from the end of shaft as the original bearing. Failure to position bearing sufficient distance from end of shaft could result in high end thrust on bearing. (See "Bearings"). Bearings are positioned at the factory so that when the endbell is installed there is about 1/32 to 1/16 inch clearance between the bearing and it's stop in the bearing housing.

6. During reassembly make certain all bolts removed during disassembly are installed and tight. Use lock washers on all bolts.

7. Connect wires to their original connections. Tagging of wires and connection points during disassembly of the machine as described in step 2 will aid in determining correct connections.

8. Before placing generator in operation make certain brushes are seated and centered on the commutator and the slip rings. Visually inspect clearance between the DC brush holders and the commutator riser. About 1/8 inch clearance between brush holders and riser is normal.

9. Before placing the generator in operation, visually inspect alignment of generator armature with field poles. Excessive misalignment could result in low output voltage.

10. Before placing generator in operation, remove engine spark plugs and turn generator armature. Visually inspect unit for satisfactory clearance between rotating and stationary parts. Listen for noises which could be caused by parts rubbing together.

TROUBLESHOOTING

LOCATING TROUBLE

If the generator does not appear to be producing voltage, check the load circuit breakers or fuses. If a circuit breaker is tripped, reduce the load and reset the breaker. If fuses are blown, replace the fuses. Another common cause of poor generator operation is underspeed. Speed can be easily checked with a frequency meter or tachometer. The following troubleshooting chart lists various symptoms of poor generator operation as well as the possible causes and means of correcting the deficiencies.

SYMPTOM	POSSIBLE CAUSE	POSSIBLE REMEDY
No Voltage	Poor brush connection (either commuatator or slip ring brushes.)	Clean and adjust or replace brushes. Repair commutator and slip rings if necessary. Make certain that brushes do not bind on brush holders and that brush wires are connected properly. See additional information concerning maintenance of brushes, commutator and slip rings.
	Loss of residual magnetism in field poles, due to long inactivity, lightning striking system, overload or short circuit.	Raise DC brushes and connect positive and negative brushes to a 6 or 12 volt storage battery momentarily to magnetize field poles.
	Excitation (DC) leads open or shorted.	Check with continuity lamp or ohm meter. Replace leads if necessary.
	Too much resistance in field rheostat or resistor.	Reduce resistance of rheostat or replace resistor.
	Open field circuit in field coils, field rheostat switch or fuse.	A DC test lamp should be used to trace the open circuit. If open circuit is indicated repair or replace defective part.
	Shorted condensers.	Check AC output with condenser removed. Replace condenser if it is shorted.
	Short circuit in line or load.	Check for short in load by removing each individual motor or appliance from the line by switching it to off. Check the line by disconnecting the generator from the line at the generator terminal box.
	Open armature windings due to commutator throwing solder from riser because of excessive heating.	Commutator must be resoldered, turned and undercut.
	Coils shorted or open.	Check for open circuit with a continuity lamp and for short circuit with an ohmmeter. Replace coil if winding is open or shorted.
	Shorted slip rings.	Disconnect lead wires and check slip ring insulation with a megger. Repair or replace slip ring assembly if defective.
	Defective meters.	Repair or replace or bypass meters.
	Open ammeter shunt or filter choke.	Check for open circuit with a continuity lamp. Replace or repair defective part.
	Internal moisture, indicated by low resistance readings on megger.	Dry out the windings. Machines of small capacity may be dried out by putting them into a hot, dry room or by heating them up moderately from an outside source. Another method is to run unit several hours with full load current with generator lead wires short circuited. To do this, lower the AC voltage by adjusting the field rheostat to maximum resistance so that the stator coils are not overloaded.

SYMPTOM	POSSIBLE CAUSE	POSSIBLE REMEDY
Low Voltage	Excessive load.	Reduce load. With 3 wire, single phase generators, the load on each leg should be as evenly balanced as possible and should not exceed the rated current on any leg.
	Low Speed: 1. Improper throttle setting. 2. Defective governor. 3. Defective carburetor. 4. Excessive load. 5. Defective bearing.	1. Correct throttle setting, check speed with frequency meter or tachometer. 2. Adjust, repair or replace governor. 3. Adjust, repair or replace carburetor. 4. Reduce load. 5. Replace bearing.
	Insufficient excitation.	Decrease field resistance by adjusting rheostat or removing resistor or adjusting resistor jumper wire.
	Line loss.	Increase size of line wire.
	High resistance connections. Connections will be warm or hot.	Make better connections electrically and mechanically.
	Reversed field coil or armature coil connection.	Connect properly. Flash field to magnetize field poles in correct polarity.
	Shorted field.	Test field coils for possible short by checking resistance with an ohmmeter or resistance bridge. Replace defective coil if necessary.
	Brushes dirty or not properly seated.	Clean or replace brushes and reseat.
	Slip rings or commutator dirty or in need of repair.	Clean or repair as necessary. See additional information concerning care and repair of slip rings and commutator.
	Low power factor.	Reduce inductive (motor) load. Some AC motors draw approximately the same current regardless of load. Do not use motors of larger horsepower rating than is necessary to carry the mechanical load.
	Weak field due to operating in warm temperature.	Improve the ventilation if generator is housed indoors. Field current can be increased providing the generator temperature does not exceed temperature rating stamped on the nameplate.
Fluctuating Voltage (May be indicated by flickering lights)	Irregular speed or prime mover (engine or electric motor).	Check and adjust governing device and carburetor if engine driven.
	Fluctuating load.	Stabilize load. The addition of a lamp load (resistance load) may compensate partially for load changes caused by intermittent motor operation.
	Poor brush contact.	Clean and adjust or replace brushes. See additional information concerning care of brushes, commutator and slip rings.
	Loose terminal or load connections.	Make better connections mechanically and electrically.

SYMPTOM	POSSIBLE CAUSE	POSSIBLE REMEDY
Fluctuating Voltage (continued)	Generator overloaded.	Reduce load.
	Slip rings or commutator pitted or rough.	If slip rings or commutator cannot be cleaned up with sandpaper, turn rings or commutator on a lathe concentric with bearings.
	DC excitation voltage fluctuating.	Trace DC excitation through brushes, commutator and field coils and make reapirs as necessary.
	Shorted field coil.	Test field coils for possible short by checking resistance with an ohmmeter or resistamce bridge. Replace defective coils.
	Defective bearing causing uneven air gap.	Replace worn bearing.
High Voltage	Improper field adjustment (excessive magnetic field strength.)	Increase excitation field resistance by adjusting rheostat or adding a fixed field resistor.
	Excessive speed.	Adjust governor and carburetor if engine driven, making certain generator operates at rated speed as stamped on the generator nameplate.
	Faulty voltage regulator operation.	Try operating without regulator or replace regulator.
	Operating in sub-zero temperatures.	Increase field resistance.
Brush Sparking	Commutator defective: 1. Surfact pitted or rough. 2. High mica bars. 3. Outer surface not concentric with shaft.	Clean commutator. If sanding will not remove pitts, machine and undercut commutator.
	Slip rings defective: 1. Surface pitted or rough. 2. Slip ring insulation defective. 3. Surface not concentric to shaft.	Sand slip rings. If sanding will not remove pitts or rough spots machine slip rings.
	Brushes not in commutating plane.	Brush holder rings are set at the factory and marked in a position so that the brushes ride at electrical neutral points on the commutator. If brush ring is removed for any reason it should be replaced in the original position as marked.
	Loose brush holder.	Realign and tighten.
	Lack of brush pressure.	Adjust spring tension or replace brush tension spring.
	Improper grade of brushes.	If time permits, order brushes from the factory by part number. It is best to keep an extra set of brushes on hand and replace old brushes when approximately two-thirds worn.
	Dirty commutator or slip rings.	Sand lightly with 00 sandpaper.

SYMPTOM	POSSIBLE CAUSE	POSSIBLE REMEDY
Brush Sparking (continued)	Generator overloaded.	Check ammeter readings and compare with nameplate rating. With 3 wire, single phase and 4 wire, three phase generators, the load on each leg should be as evenly balanced as possible and should not exceed the rated current on any leg.
	Open armature	Check for open circuit with a continuity lamp. Repair or replace armature if necessary.
	Grounded, open or shorted field winding.	Check for open circuit with a continuity lamp and for short circuit with an ohmmeter. Replace coil if necessary.
Overheating Most machines are designed to withstand a temperature rise of 50°C (see nameplate rating) 50 degrees Centigrade equals 122 degrees Fahrenheit.	Generator overloaded.	Reduce load. (Check ammeter readings and compare with nameplate rating.)
	Clogged ventilating screens.	Clean air passages.
	High room temperature.	Improve ventilation.
	Insufficient circulation.	Provide cross-ventilation.
	Operating with excessive voltage.	Check voltage drop in distribution lines and connections and adjust voltage as described in voltage deviation instructions.
	Low power factor.	Reduce inductive load (motors), or install power factor improvement capacitors.
	Unbalanced load on 3 wire, single phase or 4 wire, 3 phase generators.	The load on each leg should be as evenly balanced as possible and should not exceed the rated current on any leg.
	Motors operating off generator not designed for generator frequency and voltage.	Motors operating from generator must be of the same frequency and voltage as stamped on the generator nameplate.
	Generator coils or windings shorted or grounded.	Test field coils for possible short by checking resistance with an ohmmeter or resistance bridge. Replace defective coil if necessary.
	Excessive brush pressure.	Adjust pressure or replace brush tension springs.
	Coupling misaligned.	Align coupling.
	Bent shaft.	Straighten or replace.
	Endbells out of position.	Align endbells so that the air gap between the rotating part and the stationary part is equal at all points.
	Dry bearing.	Replace bearing.

SYMPTOM	POSSIBLE CAUSE	POSSIBLE REMEDY
Mechanical Noise	Dry or defective bearing.	Replace bearing.
	Rotor rubbing on stator due to worn out bearing.	Replace worn bearings.
	Loose lamination.	Tighten bolts, dip in varnish, and bake.
Frequency Deviation	Generator speed above or below nameplate rating or fluctuating.	Adjust throttle and/or governor.
Radio Interference	Radio frequency interference generated by sparking brushes.	Connect .5 mfd. capacitors from all ungrounded brushes to the frame. Voltage rating of the capacitors should be at least twice the rated voltage of the circuit to which they are connected.
	Radio interference caused by leakage of static charge from generator shaft.	Install shaft grounding brush assembly, pruchased from the factory.
	Radio interference caused by electrical system of prime mover (engine or electric motor).	Suppress radio interference. Consult a competent radio repair man or electrician.
Generator Frame Produces Shock When Touched	Grounded armature or field coil.	Repair.

WARRANTY

This generator is warranted to produce its rated output as stamped on the nameplate when installed and operated in accordance with instructions.

It is warranted to be in good condition electrically and mechanically when leaving the factory.

It is warranted against electrical or mechanical defects in workmanship for a period of one year after shipment from the factory. Any parts found to be defective by factory inspectors after return to the factory, transportation charges prepaid, will be replaced or repaired free of charge. This does not include any component part or standard accessory such as meters, engines, relays, etc., made by other manufacturers, as these are subject to the warranties of those manufacturers.

KATOLIGHT

ELECTRIC POWER PLANTS

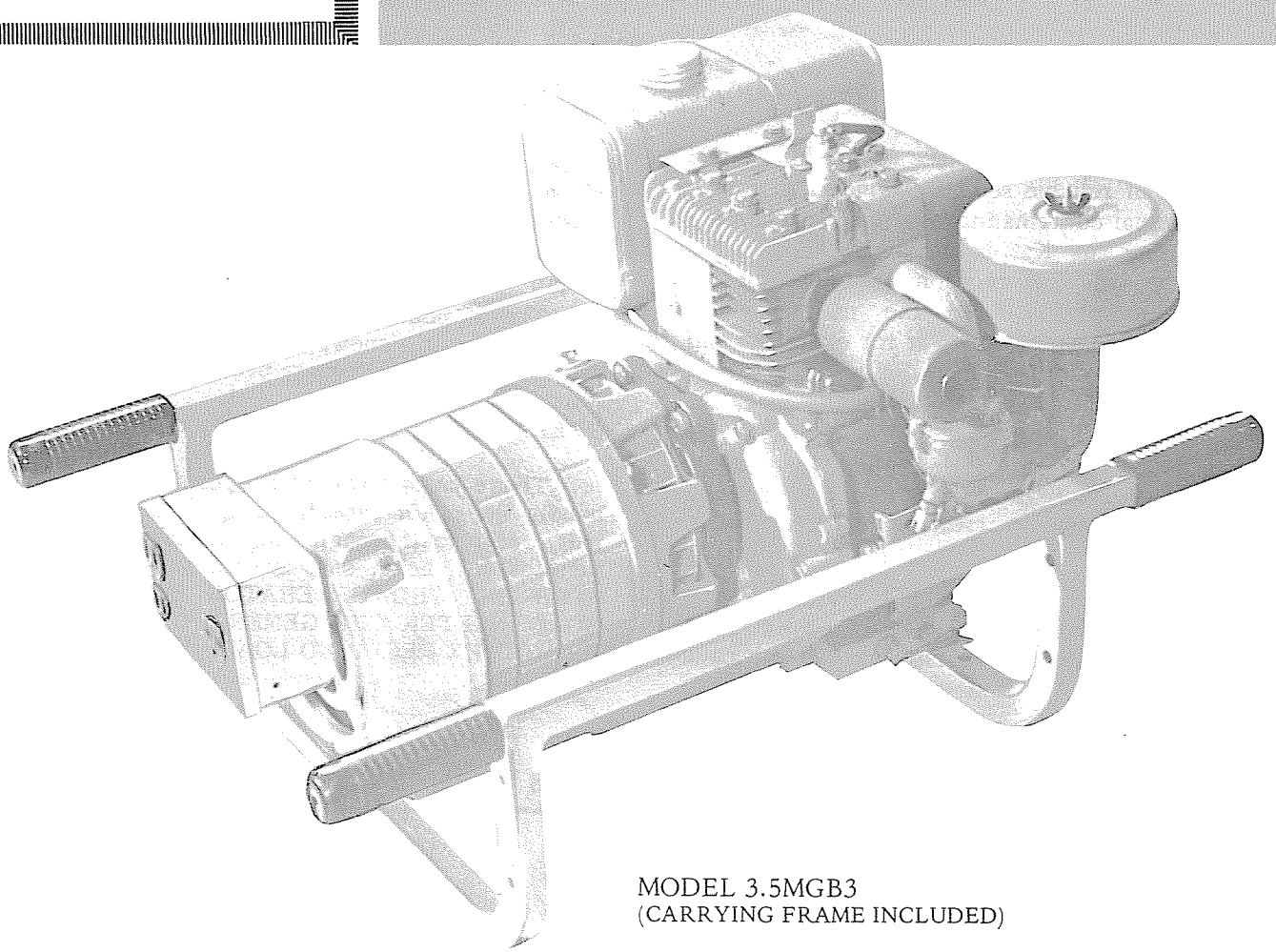

MODEL 3.5MGB3
(CARRYING FRAME INCLUDED)

OWNERS GUIDE

and

PARTS LIST

KATOLIGHT CORPORATION
MANKATO, MINNESOTA 56001 PHONE 507 387-7973

Printed in U.S.A.
Form AC1/12-173

OWNER'S GUIDE and PARTS LIST

Air Cooled Electric Alternator Type Power Plants, 3600 RPM, 60 Cycle, Statically Excited

GENERAL

Your new Katolight Electric Alternator Type Power Plant is rugged and compact, designed and built for dependable, trouble-free operation. It will provide years of reliable service if given the proper care. This manual contains information for operating and maintaining the Katolight Power Plants listed below. Study this information carefully before operating your plant. Keep the manual in a convenient location and refer to it for operation and maintenance instructions.

INSTALLATION

Unpacking

Carefully unpack the power plant and visually inspect it for damage. If the unit is damaged, check with the transportation carrier for adjustment of the damage.

Inside Operation

The exhaust products of gasoline engines contain carbon monoxide, which is poisonous and can cause death. Connect a flexible metal hose (see Figures 1 and 2) from the engine exhaust to the outside air. This hose should be at least as large as the exhaust port of the engine. Avoid sharp bends in the hose to prevent back pressure on the engine. If the exhaust hose rises above the engine, install a condensation trap at the lowest point.

Outside Operation

These plants may be operated out-of-doors. However, rain, snow, dust, dirt, etc., may damage the unit. Provide adequate protection.

OPERATION

These units have been operated and adjusted to handle their full rated capacity. Before starting the unit, refer to the engine manual for instructions and location of choke, stop button, gas shut off. WHEN STARTING THE GENERATOR DISCONNECT ALL LOADS. AFTER THE GENERATOR IS OPERATING, APPLY THE REQUIRED LOADS.

MODEL	WATTS	VOLTS	AMPS	PHASE	WIRE	START
2.5MGB3	2500	115	22	1	2	Manual
3.5MGB3	3500	115/230	15.2	1	3	Manual
3.5MGB3E	3500	115/230	15.2	1	3	Electric
5MGB3	5500	115/230	24	1	3	Manual
5MGB3E	5500	115/230	24	1	3	Electric
7.5MGB3E	8000	115/230	34.8	1	3	Electric

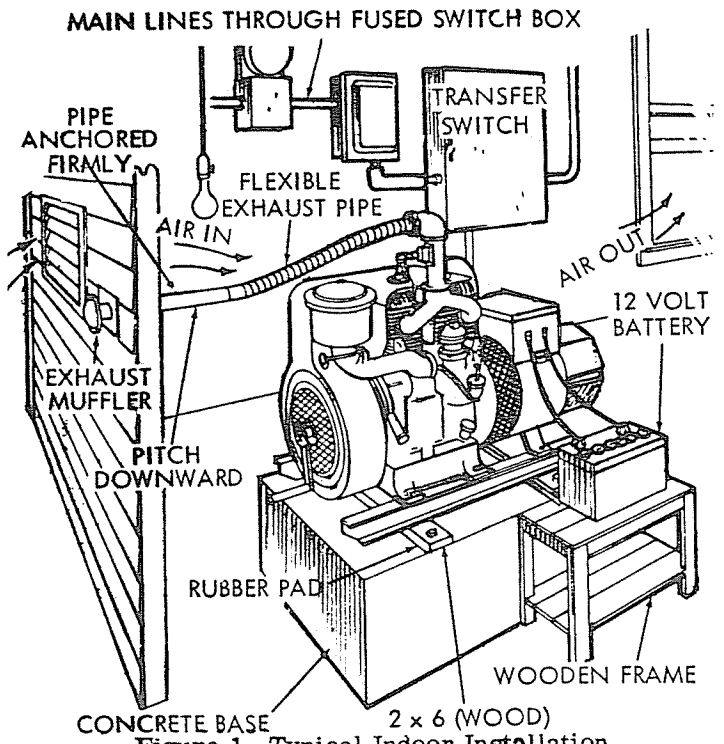

Figure 1. Typical Indoor Installation of Automatic Start Plant.

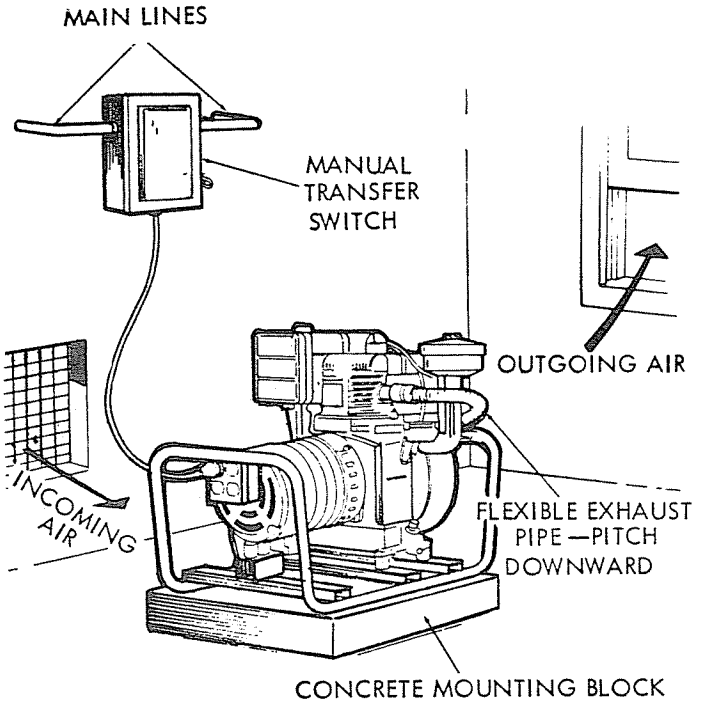

Figure 2. Typical Indoor Installation of Manual Start Plant.

These Katolight Electric Alternator type Power Plants are designed to provide 60 cycle alternating current at 3600 RPM. The output voltage is 115 volts, 230 volts or a combination of 115/230 volts, depending on the model. All units are equipped with solid-state exciter systems and are coupled directly to the engine for permanent alignment.

The alternator is inherently self-regulating and its output automatically adjusts to the load. The alternator will not be damaged if it is operated at no-load condition. Your alternator has a large overload capacity, sufficient to handle momentary loads (such as starting motors) approximately 25% above its rating and 10% overloads for 1/4 to 1/2 hour.

CONNECTIONS AND WIRING

All wiring emanating from a Power Plant receptacle should conform to the National Electric Code and state and local regulations. Connecting the Power Plant to a house wiring circuit should be done through a transfer switch. This will prevent damage to the alternator and circuit components if the commercial power is restored during operation. It will also prevent your Power Plant from feeding electrical energy into the commercial power system thus avoiding injury and damage.

If grounding is required in local codes, drive a 1/2" steel pipe into the ground as close to the plant as possible. This pipe must penetrate to approximately three feet. Connect an approved ground clamp to the pipe using a No. 10 or 12 wire from the clamp to the battery negative terminal on the control panel or alternator ground lead.

WIRING

When connecting the load to the generator, use a wire size capable of handling the load, this will prevent excessive voltage drops in your lead wires.

ABILITY OF CORD TO CARRY CURRENT (2 or 3-WIRE CORD)			
Wire Size	Type	Normal Load	
No. 18	S, SJ, SJT or POSJ	5.0 Amp. (600W)	7 Amp. (840W)
No. 16	S, SJ, SJT or POSJ	8.3 Amp. (1000W)	10 Amp. (1200W)
No. 14	S	12.5 Amp. (1500W)	15 Amp. (1800W)
No. 12	S	16.6 Amp. (1900W)	20 Amp. (2400W)

WIRING: Use sufficiently large insulated wire to connect load to generator, this will prevent excessive voltage drops.

CONSULT LOCAL ELECTRICAL CONTRACTOR FOR PROPER WIRE SIZE AS PRESCRIBED BY YOUR LOCAL ELECTRICAL CODE.

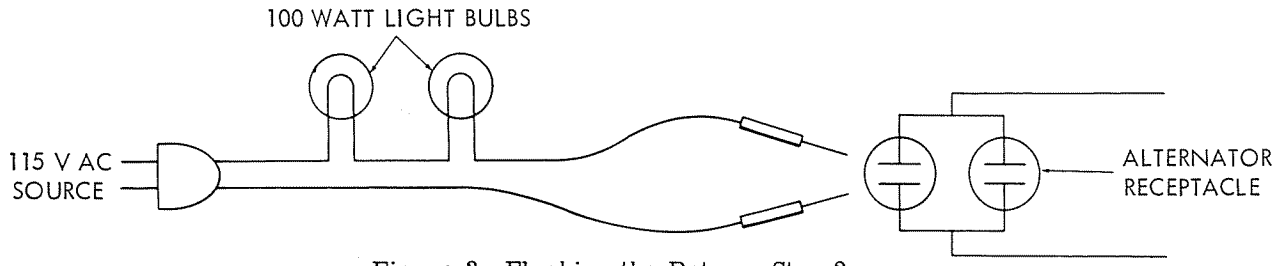

Figure 3. Flashing the Rotor - Step 2

MAINTENANCE

Brushes are the only alternator parts which normally wear. Inspect the brushes every 1000 hours of operation. If the brushes are worn to approximately 5/16 inch, replace them. Replace only in sets, never a single brush.

Flashing the Rotor

After long periods of storage, or if residual magnetism is distorted, it may be necessary to flash the rotor to restore the magnetism. This may be accomplished by the following procedure. Operate the unit at each step.

1. Run the engine at a higher-than-normal speed (approximately 4000 rpm). If this does not restore output, proceed to step 2.

2. Connect two 100-watt bulbs in series (see Figure 3) to a 115 volt source. Touch test probes to both sides of alternator 115 volt receptacle for approximately 1 second - or:

3. Connect two wires to a 1-1/2 - 6 volt battery (figure 4) using the free ends of the wires as probes. Touch the positive wire to the positive brush and negative wire to negative brush for approximately one second.

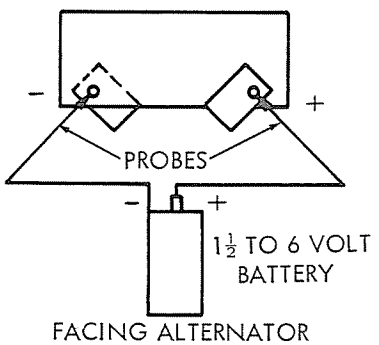

Figure 4. Flashing the Rotor - Step 3

Rectifier Testing

The silicon rectifiers can be damaged when subjected to either shorts or voltage transient conditions. To test the rectifiers, proceed as follows.

1. Disconnect the leads from the stator coil to the two terminals above the positive (+) brush.

2. Using the ohmmeter leads as probes (see Figure 5), touch the positive probe to the positive brush.

3. With the negative probe in contact with each rectifier terminal, no reading should occur. If a low reading is registered, the rectifier is shorted. If a high reading is registered the rectifier is open circuited. In either case replace the rectifier.

4. Reverse the ohmmeter leads; a low reading will register if the rectifier is not defective.

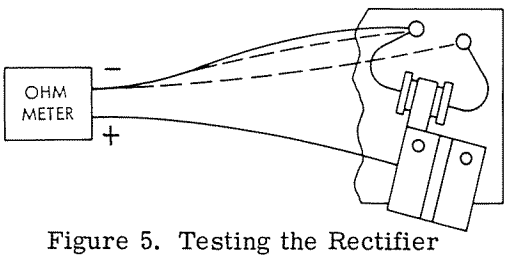

Figure 5. Testing the Rectifier

ALTERNATE RECTIFIER TEST

Your silicon rectifier can be tested with a 1-1/2 volt D-size flash light battery and the bulb from an ordinary flash light if no meter is available.

1. Repeat Step 1 of the above procedure.

2. Connect a wire from the base (-) of the battery to the negative stud on the brush holder.

3. Connect a lead from the light bulb to the brush holder assembly. Touch the light bulb base to the positive anode of the battery. The light bulb should not glow.

   By reversing the leads to the terminal board, the positive brush assembly should now complete the circuit allowing the light bulb to glow. Should the light bulb glow in either direction, the diode is defective. If the light bulb refuses to glow in either direction, the diode is also defective.

Frequency Adjustment

Check the frequency or rpm of your alternator as follows:

1. With the engine stopped, connect a cord with two 100 watt bulbs connected in series to the 115 volts alternator receptacles and to an outlet with 115 volts, 60 cycle power as illustrated in Figure 6. The two bulbs will burn dimly. CAUTION: Insert the Plug into the Alternator First.

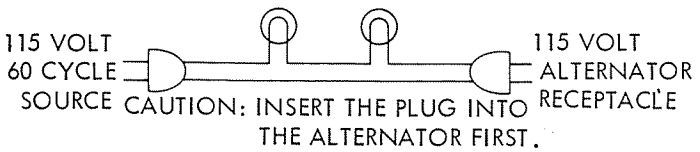

Figure 6. Adjusting the Frequency

2. Start the engine with the alternator connected as described in step 1. At no load, run the engine at 3700 rpm (approximately 63 cycles per second). The bulbs should flash approximately three times per second.

3. Apply a full rated load to the remaining alternator receptacle. At this load the engine governor should adjust the speed to 3600 rpm (60 cycles per second) and the bulbs should remain either on or off. The frequency of the alternator then matches the frequency of the commercial power source.

4. If the bulbs flash, the frequency of the alternator is either greater or less than the 60 cycle source. To adjust the alternator frequency, increase or decrease the engine speed until the flashing stops and adjust the engine governor to maintain that speed.

Storage Battery Care

If your Power Plant is electric start, maintain the storage battery as follows:

1. Place the battery in a well ventilated room of moderate temperature, free from vibration and not in contact with cement floor or stone wall.

2. Check the liquid level regularly. Add distilled water to keep the level 1/2 inch above the plates. Always use distilled water. DO NOT USE HYDRANT OR WELL WATER. Rain water may be used if it is caught in an earthen vessel.

3. To reduce corrosion, coat the terminals with a thin film of light grease.

4. If the battery is located in an unheated building, keep the battery fully charged to prevent freezing.

5. Check the condition of the battery by testing the specific gravity of the solution in each cell with a hydrometer. The specific gravity of the solution in a fully charged battery will be between 1.25 and 1.30.

6. Never allow the battery to remain discharged.

7. Charge the battery at regular intervals. Experience will indicate how often the battery will require charging. Charge the battery until all cells gas freely and the hydrometer reading stops rising in all cells.

TROUBLE SHOOTING CHART

	See Cause
No voltage	3, 4, 5, 7, 9, 10, 11, 12, 13, 19
Low voltage	2, 9, 10, 11, 13, 14
High voltage (normal range 130 volts no load, 105 volts full load)	18
Low power output	1, 2, 8, 9, 11, 12, 13, 14, 15, 17
Slow or no voltage build-up when starting engine	13, 14, 15, 17
Voltage build-up only after application of load	2, 3, 4, 5, 6, 9, 10, 11, 13, 20
Engine must be overspeeded to cause voltage to build up	2, 3, 13, 20
Intermittent voltage	9, 10, 11, 12
Repeated rectifier failure	18
Engine fires but does not come up to speed before stopping	1, 8, 14, 15, 16, 17
Inserted magnet rotor will not build up voltage	20
Bearing causes wear to shaft or housing	21, 22
Unit operates normally at rated speed but voltage does not rise above 90 volts	2, 6, 13

Cause	Remedy
1. Rotor rubbing	A. Adapter housing not properly attached to engine. Check for concentricity.
	B. Extreme wear of engine main bearing. Re-bush main bearings.
	C. Dirt or chips on the engine shaft taper. Clean up and re-assemble.
2. Low speed	A. Overload connected to engine. Remove load.
	B. Rotor rubbing. (See Cause No. 1.)
	C. Governor improperly adjusted. (See frequency adjustment, Page 2.)
	D. Carburetor improperly adjusted or dirty. See engine service manual.
	E. Ignition problems. Check engine service manual.
3. Low residual voltage	Flash rotor (see Page 2). If not successful, replace rotor with new rotor.
4. Rectifier shorted	Most often caused by over-speeding of engine. Replace rectifier, re-calibrate governor (See Page 2) making sure governor operates freely.
5. Faulty reactor	Open circuit, check for continuity; if open, replace.
6. Defective reactor	See wiring diagram. Short out winding with jumper wire, which is connected to the rectifier assembly. With engine operating at 3750 rpm, if output voltage is below 135 volts, replace reactor.
7. Stator open	Check continuity for open circuit; if open, replace.
8. Shorted turns in stator	A shorting of a few turns will cause overheating and burn out these turns. Severe shorting of many turns will cause the engine to be badly loaded without a load connected to the generator. Replace stator.
9. Loose or poor connection	Check tightness of all terminal screws. Check all connections for signs of wearing which would indicate poor connections and loss of voltage and power.
10. Excessive brush wear	If brushes are shorter than 5/16", replace.
11. Severely coated slip ring	Ring can become severely coated, particularly if operated in a high oil atmosphere. Re-polish slip rings with extra fine sandpaper. WARNING, DO NOT USE EMERY PAPER!
12. Defective outlet receptacles	Replace.

Katolight Service - Master Repair Manual - Page 192

13. Reactor polarity reversed	Check color coding against wiring diagram or reverse connections of series winding at reactor.
14. Extreme overload connected to generator	Remove load.
15. Faulty carburetion	Check engine service manual.
16. Out of gasoline	Add gas.
17. Out of oil	Add oil and operate engine at 1/4 load for approximately 2 hours to permit any possible scoring to "heal" before applying full load.
18. Engine speed to high	Check for sticky governor. Re-set governor for 3600 rpm at full load. (See page 2.)
19. Open rotor circuit	Check for continuity; if open, replace.
20. Polarity reversed at slip ring	Read brush polarity with dc voltmeter. The positive brush must be nearest the rotor bearing. If not, connect accordingly.
21. Bearing not properly secured	When re-assembling a unit, always clean thoroughly and apply Loc-tite to the outside and inside diameter of bearing before inserting into place.
22. Rotor through-bolt loose	Tighten.

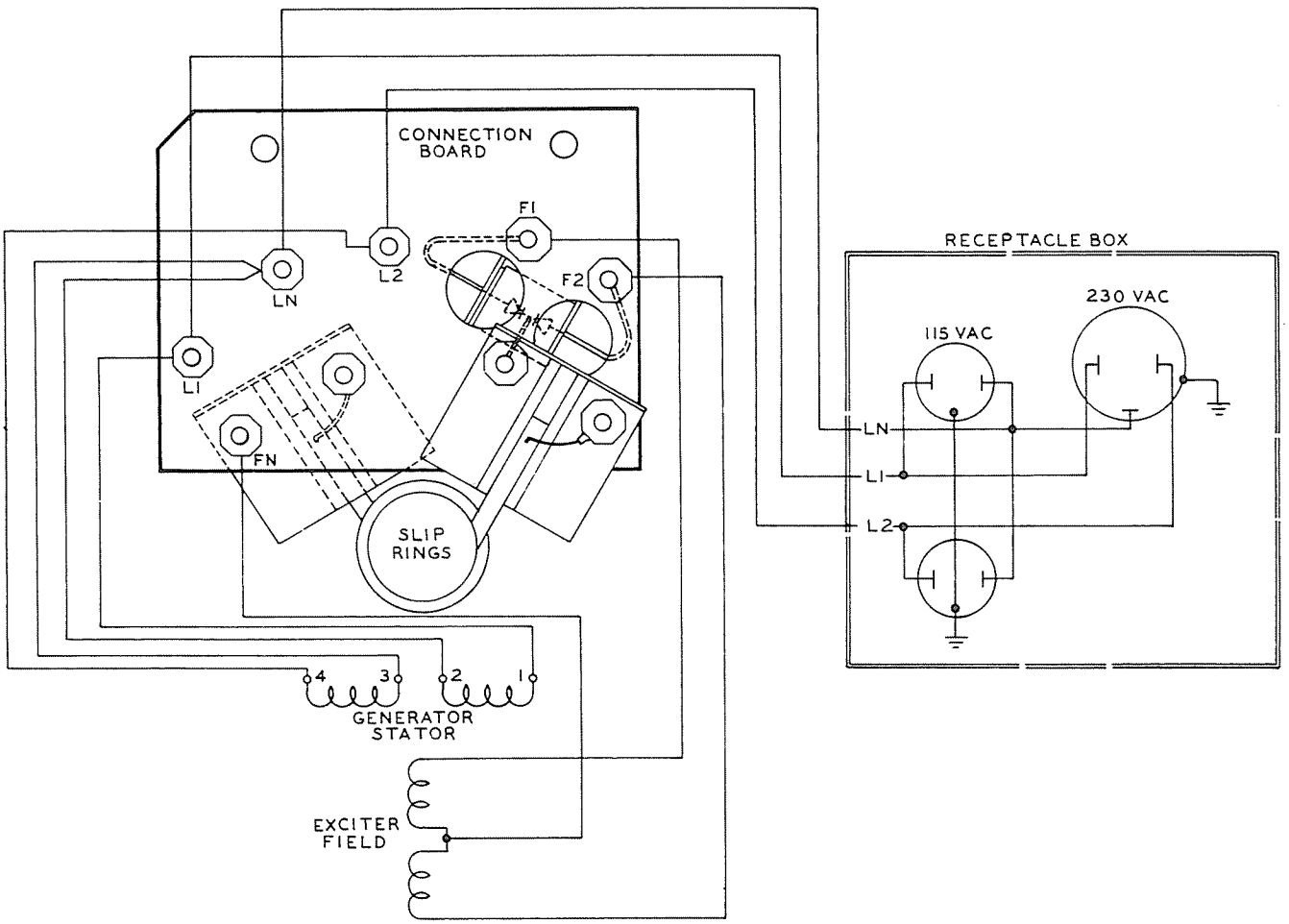

Figure 7. Connection Diagram for Models 2.5MGB3 and 3.5MGB3

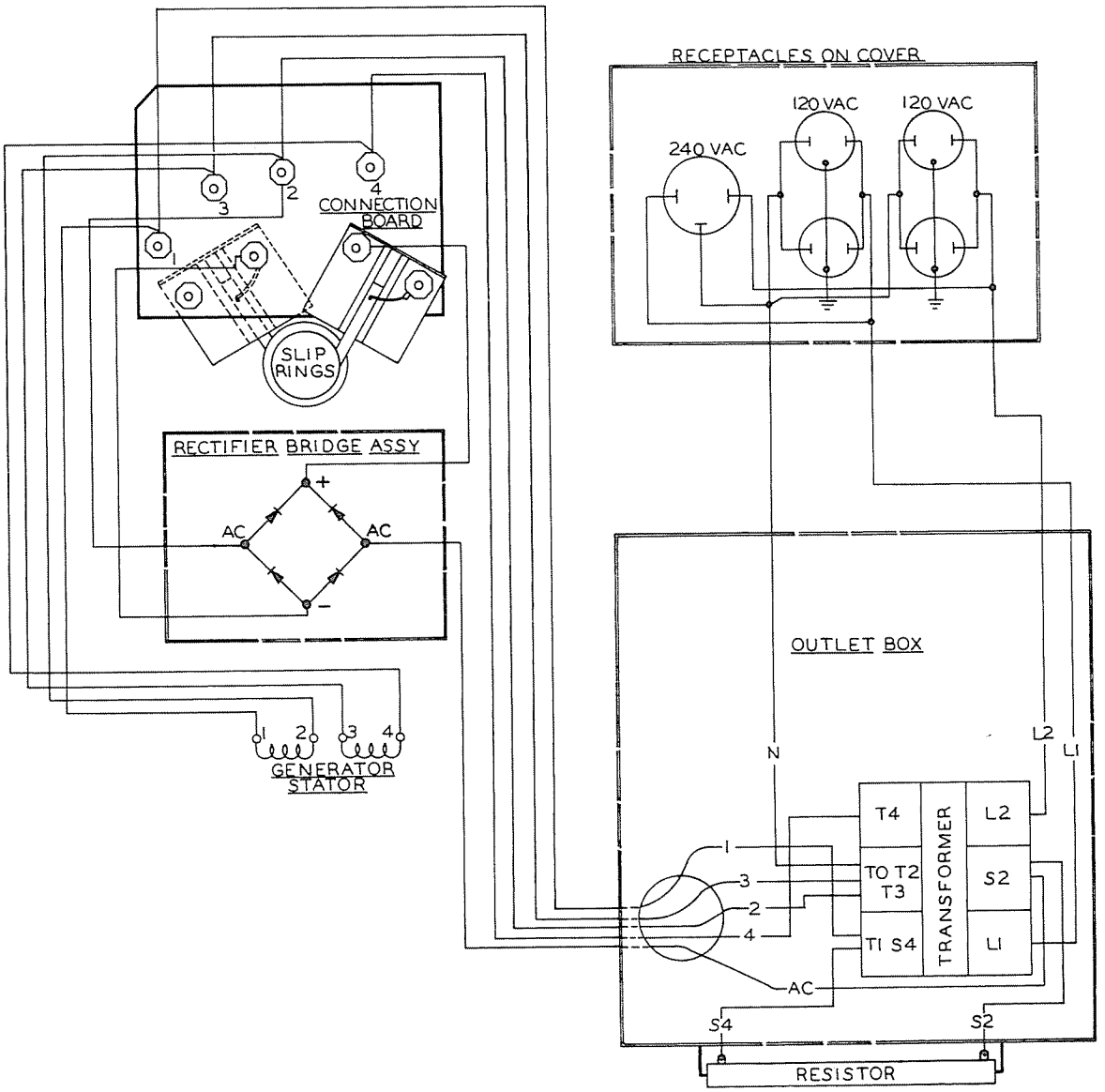

Figure 8. Connection Diagram for Model 5MGB3

KATOLIGHT CORPORATION
Katolight Service - Master Repair Manual - Page 194

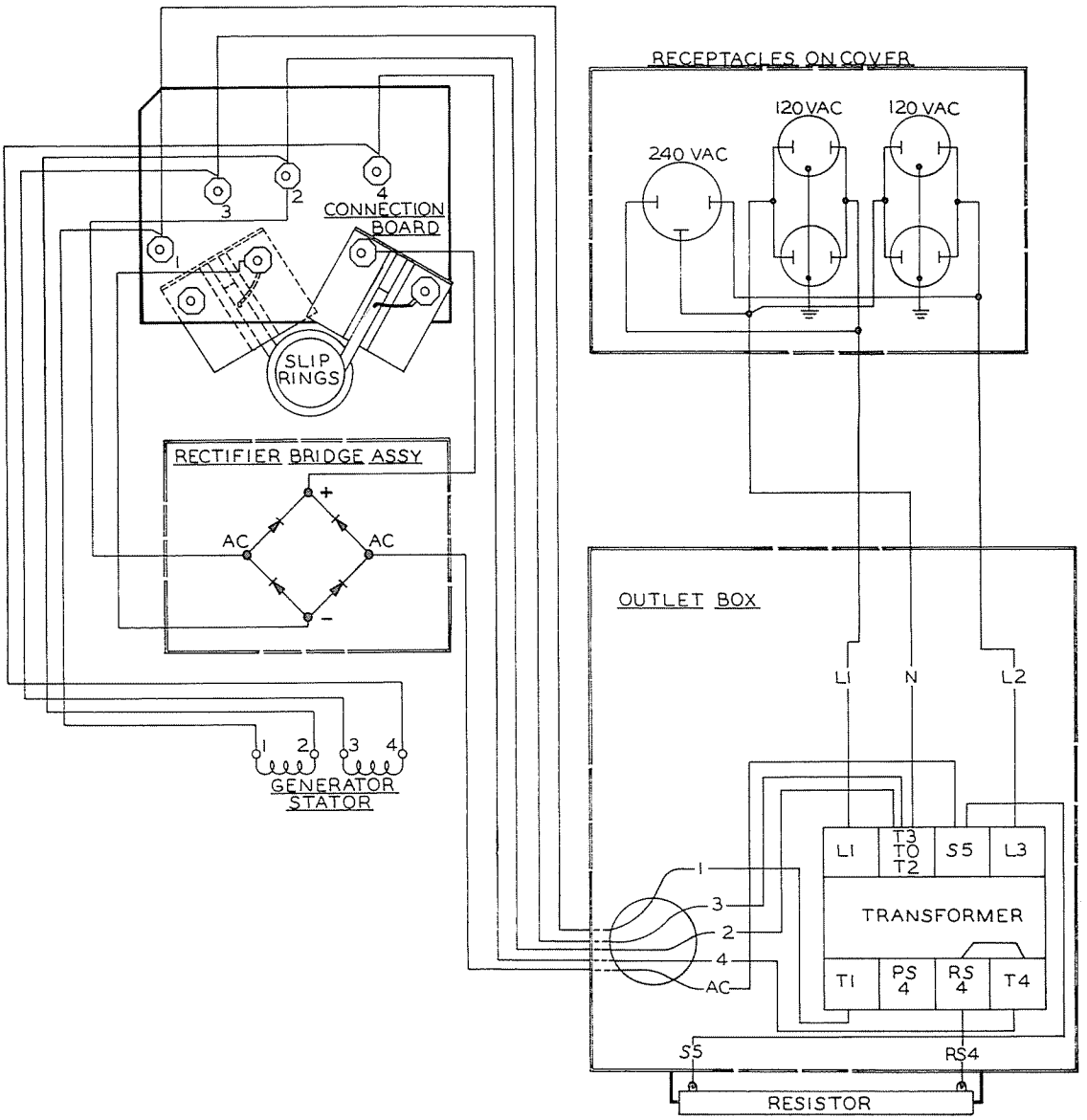

Figure 9. Connection Diagram for Model 7.5MGB3E

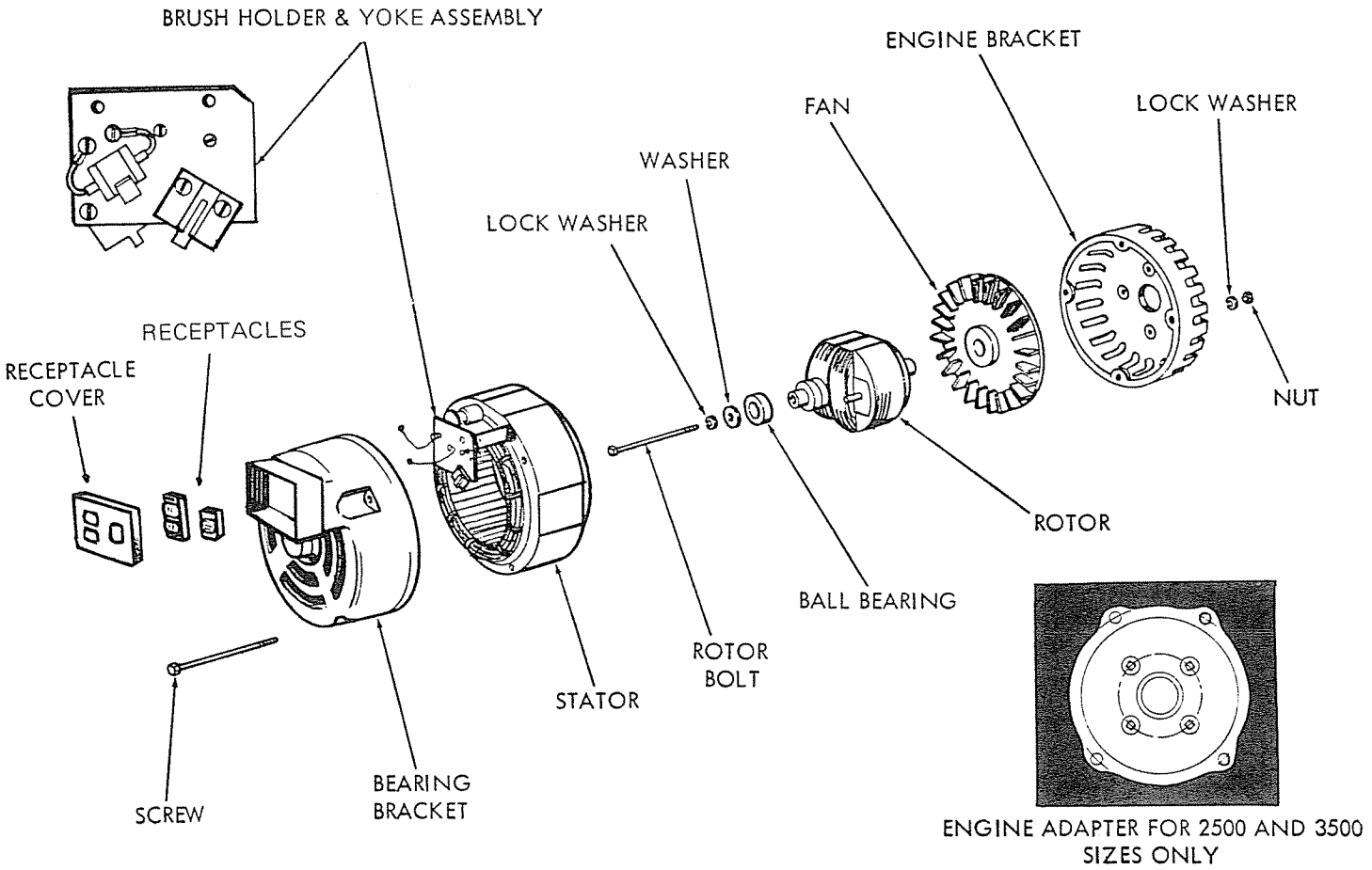

Figure 10. Repair Parts for Models 2.5MGB3 and 3.5MGB3

PART NO.	DESCRIPTION	2.5MGB3	3.5MGB3
RF-000-Gr. 3	Stator	1	
RF-000-Gr. 4	Stator		1
RF-500-Gr. 3	Rotor w/Fan	1	
RF-500-Gr. 4	Rotor w/Fan		1
16296	Fan	1	1
RF-650-Gr. 2	Brush Holder and Yoke	1	1
16340	Rectifier	2	2
12212	Brush and Spring	2	2
16306	Brush Holder	2	2
16307	Brush Holder Plate	2	2
16244	Clamp	1	1
16302	Engine Bracket	1	1
16303	Bearing Bracket	1	1
16371	Engine Adaptor	1	
16372	Engine Adaptor		1
15535	Ball Bearing	1	1
16373	Screw 1/4-20 x 5-1/4	4	
16374	Screw 1/4-20 x 6-1/4		4
3405	Lockwasher 1/4"	4	4
1293	Hex. Nut 1/4"-20	4	4
16375	Rotor Bolt 5/16-24 x 6	1	
16397	Rotor Bolt 5/16-24 x 7		1
13631	Washer	1	1
1590	Lockwasher 5/16	1	1
601	Receptacle 110 V. 15 Amp.	1	1
204-252	Receptacle Cover	1	1
742	Receptacle Box	1	1
5661	Receptacle 220 V. 15 Amp		1
102-410	Carrying Frame	1	1
1629	Rubber Mountings	1	1
2856	Rubber Grips	4	4

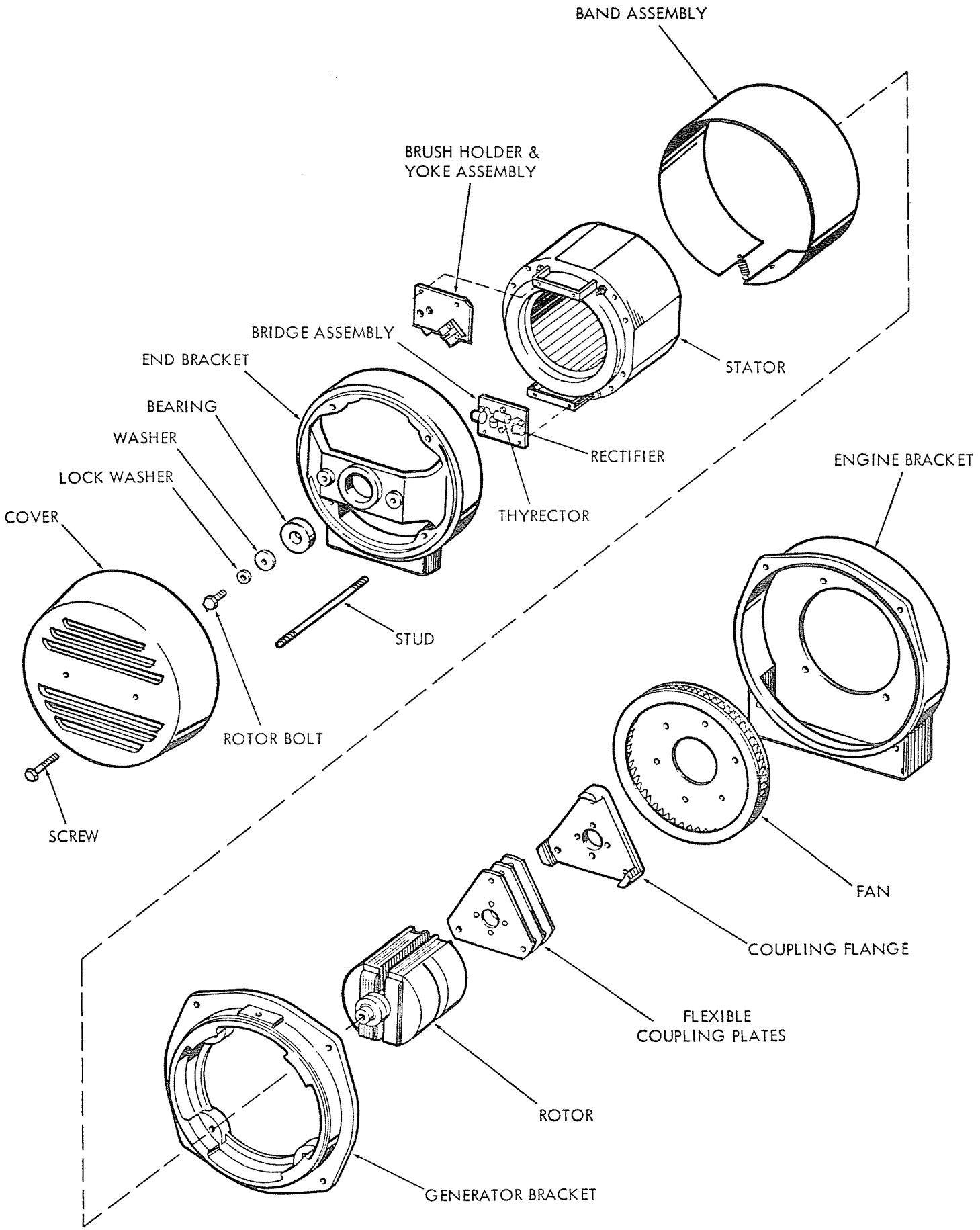

Figure 11. Repair Parts for Models 5MGB3 and 7.5MGB3

KATOLIGHT CORPORATION
Katolight Service - Master Repair Manual - Page 198

PART NO.	DESCRIPTION	5MGB3	7.5MGB3
RF-000-Gr. 11	Stator	1	
RF-000-Gr. 12	Stator		1
RF-500-Gr. 12	Rotor	1	
RF-500-Gr. 11	Rotor		1
RF-650-Gr. 5	Brush Holder and Yoke	1	1
RF-650-Gr. 11	Bridge Assembly	1	1
16340	Rectifier	4	4
17690	Thyrector (Rectangular)	1	1
17842	Thyrector (Round)	1	1
17532	Engine Bracket	1	
17238	Engine Bracket		1
2689	Hex Bolt 7/16-14 x 1	4	
5090	Hex Bolt 7/16-14 x 2		4
3712	Lockwasher 7/16	4	4
17548	Fan	1	1
16634	Coupling Plate	5	5
17539	Coupling Flange	1	
17233	Coupling Flange		1
7799	Key 1/4 x 1/4 x 1-3/4	1	
16645	Key 3/8 x 3/8 x 1-3/4		1
17447	Set Screw 1/2-13 x 5/8	2	2
16653	Hex Bolt 5/16-24 x 3/4	3	3
1590	Lockwasher	11	11
3848	Hex Bolt	4	4
17242	Generator Bracket	1	1
17239	End Bracket	1	1
17527	Studs	4	
17827	Hex Nut 1/4-20	4	4
10765	Screw 10-32 x 3/8	4	4
17533	Band Assembly	1	
17536	Band Assembly		1
55-052	Locknut 1/4-20	1	1
77-179	Hex Bolt 1/4-20 x 1-3/8 Lg	3	3
16901	Hex Bolt 5/16-18 x 1-1/4	4	4
17241	Cover	1	1
15535	Ball Bearing	1	1
13631	Washer	1	1
17526	Stud		4
5090	Hex Bolt 7/16-14 x 2		4
102-410E	Carrying Frame	1	1
2856	Rubber Grips	4	4
1628	Vibration Mounts	2	4
1629	Vibration Mounts	2	2
204-269	Control Box	1	1
601	Duplex Receptacle, 15 Amp 120V.	2	2
3330	Receptacle, 20 amp 250 V.	1	1
C17563	Field Transformer	1	
C17575	Field Transformer		1
A17556	Resistor, 50 Ohm, 50 Watt	1	
B17692	Resistor, 50 Ohm, 100 Watt		1

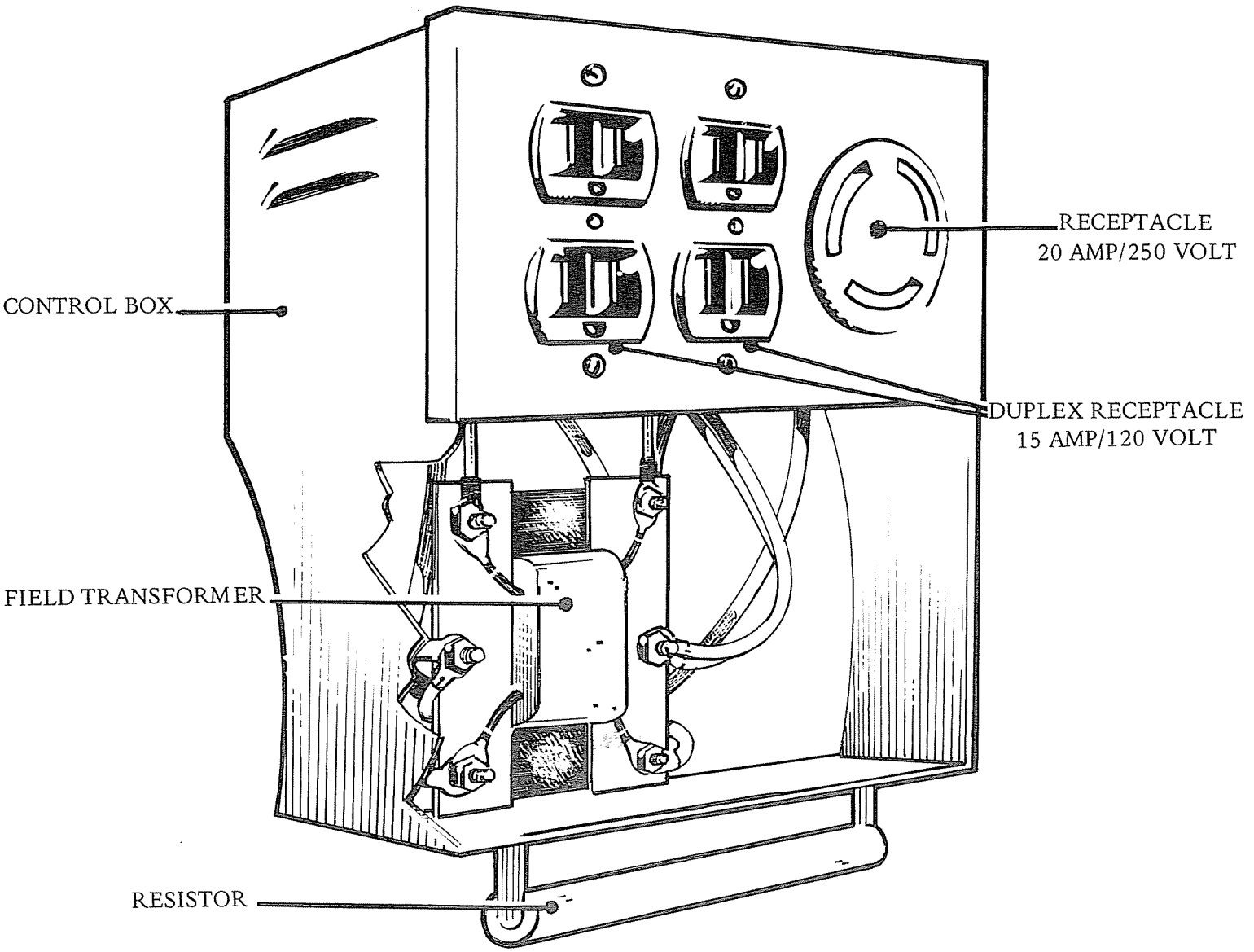

Figure 12. Repair Parts for Control Box
Models 5MGB3 and 7.5MGB3E

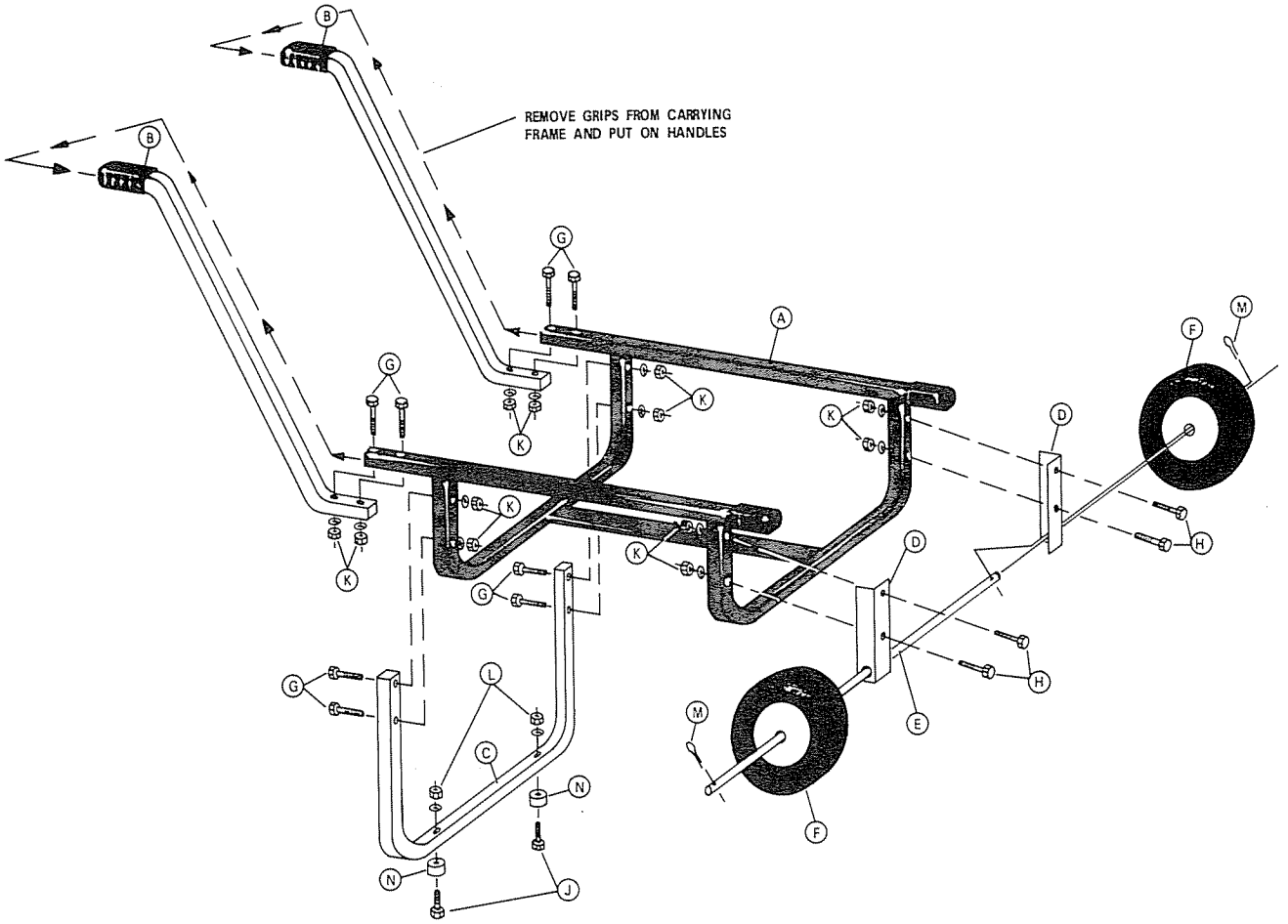

Installation of Two Wheeled Dolly

BILL OF MATERIAL		
ITEM	QUANTITY	DESCRIPTION
A	1	CARRYING FRAME
B	2	HANDLES
C	1	SUPPORT BRACKET
D	2	ANGLE
E	1	AXLE
F	2	TIRES 10 x 2.75
G	8	BOLTS 5/16 x 2 1/2
H	4	BOLTS 5/16 x 1 3/4
J	2	BOLTS 7/32 x 1 5/8
K	12	5/16 HEX NUTS & LOCKWASHERS
L	2	7/32 HEX NUTS & LOCKWASHERS
M	2	COTTER PINS 3/32
N	2	RUBBER MOUNTS

KATOLIGHT
Telescoping Portable Flood Light Tower

Protolight III
Protolight VI
Protolight VIII

The Katolight Telescoping Portable Flood Light (Protolight) Towers are a valuable addition to the Katolight Product Line of dependable standby and emergency power generating equipment. These units combine an efficient diesel air cooled Katolight engine generator set with longlife, power spotlights on an adjustable tower to bring light to unlikely locations.

The Protolight Tower is a portable source of illumination and power (single phase, 240 volts and 120 volts, 60 hertz). The engine generator is oversized in each unit so that a small amount of power for hand tools may be taken at the same time the lighting is being used.

These units are weather-resistant and mobile with housing and trailer mounting as standard. The tower itself is adjustable to a height of 30 feet, from an elevating positive lock winch on the trailer.

The lighting fixtures used are 1000 watt, high intensity discharge, metal halide, 10,000 hour life. Each lamp and ballast will draw 1100 watts operating.

The engine is diesel, air cooled, 1800 RPM pressure air cooled full pressure lube oil system.

The generator is 4 pole, 1800 RPM, revolving armature, 120/240 volts AC, 60 hertz.

The primary benefits to the user of a Katolight Protolight Tower are:

1. Portable lighting in isolated locations and in times of disaster.
2. Auxiliary power for hand tools.
3. Katolight reliability.



Protolight VIII

RATINGS, SIZES AND WEIGHTS

Model	KW	Size Transport Position	Net Weight	Export Gross Weight	Export Package Dimensions
III	4.5	71"W x 203½"L x 94½"H	2,860	5,360	78"W x 216"L x 96"H
VI	8.0	74"W x 202¼"L x 100"H	3,120	5,620	80"W x 212"L x 100"H
VIII	12.0	74"W x 220¼"L x 100"H	3,350	5,850	80"W x 230"L x 100"H

For further specifications, please see the back of this sheet.

Form TPFLT-379

SPECIFICATIONS

Model	Number of Lamps	Lumens	Average footcandles of illumination over 1½ acre area (approximately 6,000 sq. ft.)
III	3	300,000	1.4
VI	6	600,000	2.8
VIII	8	800,000	3.9

LAMPS

1000 watt, metal halide type power spotlight with nominal 1100 watt load. An average 100,000 lumen output per lamp is maintained at 10,000 hours burning 80% time life. Equipped with spring dome support, rough service arc tube harness, long life resistor and spring neck support. Fixtures are finished with corrosive resistant material and high strength lens. NEMA 4 beam spread. All lamp ballasts are enclosed in weather tight cast enclosures. Longlife lamps, fixtures, reflectors and lens are mounted on an automatic telescoping tower to nominal 30 feet. Tower when lowered to transport towing position, is provided with lock down device. The light tower is manufactured using rectangular high strength steel tubing. Each section is equipped with bearings to reduce friction and wear.

LIGHT CONFIGURATIONS

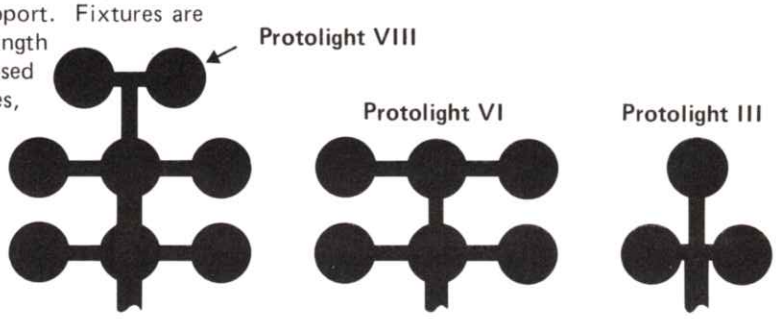

ENGINE

Unit powered by air cooled diesel engine developing adequate horsepower for continuous operation at 1800 RPM in accordance with manufacture's published specifications. Full pressure lube oil system is standard. Low oil pressure and high temperature shutdowns are provided for engine protection. Dry type air cleaner installed for dusty, dry environment. 12 volt heavy duty starting battery and charging circuit is included as well as a built in 30 gallon (110 liter) fuel tank with flexible lines.

ALTERNATOR

Alternator is 4 pole with revolving armature. Statically exciter alternator rated at 1800 RPM, 60 cycle, single phase and unity power factor. Auxiliary power available from oversized alternator at 120/240 AC thru two 120 volt receptacles and one grounded three prong 24 twist lock receptacle with circuit breakers. Complete engine alternator, engine controls (including low lube oil pressure, high temperature, diesel start, stop, shutdown device, and oil pressure gauge), and service receptacles are in a weather environmental protective (enclosure) housing, which provides environmental protection, air temperature control and open serviceability.

TRAILER

- The trailer is equipped with four adjustable jack stands for stabilizing and with retractable outriggers extendable around housing to adjustable lengths and height to adjust for uneven terrain. Wind stability estimated at 45 MPH with outriggers extended and correctly positioned. Connections for optional wire stays are provided. Trailer available with two elevating positive locking winches, one for tower tiling and one for tower extension.
- Leaf spring, high speed suspension with wheels and tires.
- Towing bar available with either lunette ring or ball hitch connections are required and safety chains.

TOWER

The Protolight Tower is square tubing of telescoping 3 section construction. The tower is elevated to vertical from horizontal by a self-braking winch mounted on the trailer frame. The tower is raised vertically by means of a self-braking winch mounted on the lower section of the tower.

Materials and Specification May Change Without Notice.

KATOLIGHT CORPORATION
3201 Third Avenue
P.O. Box 3229
Mankato, Minnesota 56001
Phone: (507) 625-7973
Telex: 29-0787

Printed in U.S.A.

For more information contact your nearest Representative, Distributor, or Dealer below:

OPERATING INSTRUCTIONS & SERVICE INFORMATION

for KATOLIGHT

PTO TRACTOR DRIVEN ALTERNATORS

MODELS

20AVR-1 · 28AVR-1

40AVR-1 & 55AVR-1

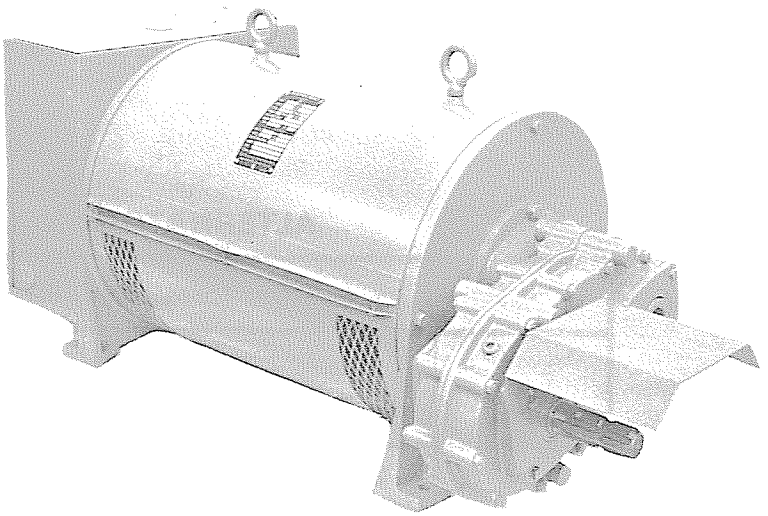

Read this book before operating the alternator and save for future reference.

Write the Model number, Type number and Serial number of the alternator in the spaces below. Be sure to give these numbers when ordering parts or corresponding about the alternator.

Alternator Model

Type Serial

KATOLIGHT CORPORATION
MANKATO, MINNESOTA — 56001 - Phone 507-625-7973

Form AD4/1 - 376

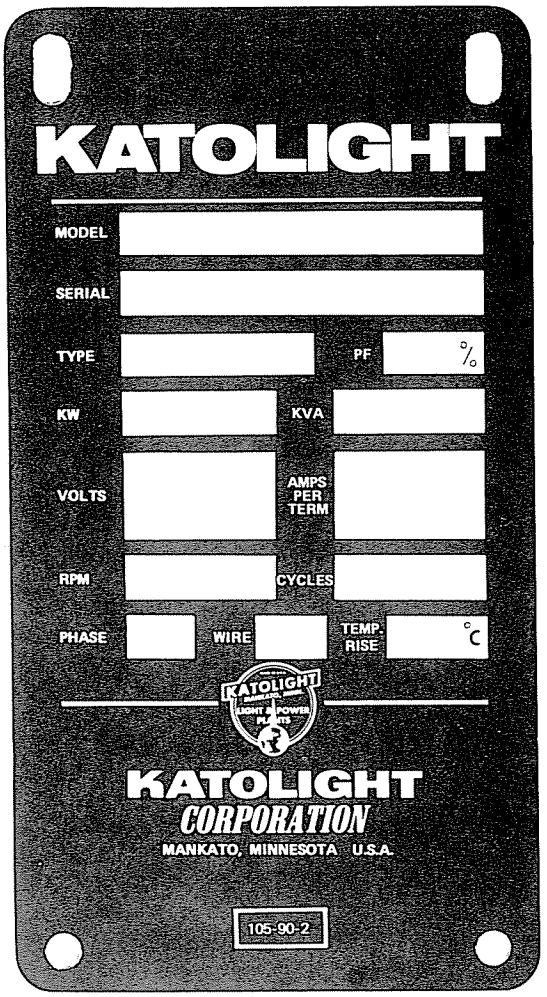

ALTERNATOR DATA

The alternators described in this manual are single phase, 115/230 VAC, 1800 RPM revolving field brushless type with Static Voltage Regulators. Output voltage may be varied as desired within range of from approximately 5 percent higher to approximately 5 percent lower than the voltage given above, by turning the voltage adjust potentiometer.

Standard equipment includes a gear increaser and protective shield and a terminal box containing a voltage regulator, mainline breaker.

Important data pertinent to your alternator set is given on the nameplate attached to the alternator. Additional information is contained in Table A. For handy reference, copy your plant nameplate information in the spaces to the side of this paragraph. FOR SATISFACTORY ALTERNATOR OPERATION GENERATOR SHAFT MUST TURN AT 1800 RPM.

TABLE A
ALTERNATOR AND GEAR DRIVE DATA

Three phase, 60 Hz, 1800 RPM						
				Power Shaft		
Model No.	Watts	PTO Speed	Speed Increaser Model Number	Model	HP	Size
20AVR1	20,000	540	GR52238 GD4000	4001	60	Comp. 33" Ext. 42"
28AVR1	28,000	540	GR52238 GD4000	4001	60	Comp. 33" Ext. 42"
40AVR1	40,000	1000	52161 GD4002	4200	80	Comp. 32" Ext. 41"
55AVR1	55,000	1000	52161 GD4002	4200	80	Comp. 32" Ext. 41"

TABLE OF CONTENTS

GENERAL INFORMATION

INTRODUCTION 2
PARTS ORDERING INSTRUCTIONS 2
LOCATION 2
DETERMINING THE LOAD 2
USE OF ELECTRIC MOTORS 3

INSTALLATION

MOUNTING ALTERNATOR 3
GEARBOX LUBRICATION 3
CONNECTING ALTERNATOR TO LOAD 3

OPERATION

PRECAUTIONS PRIOR TO INITIAL STARTING 5
ALIGNING ALTERNATOR WITH TRACTOR POWER TAKE-OFF 5
OPERATING ALTERNATOR 5
HOW TO SET COMBINATION FREQUENCY & VOLTAGE INDICATOR (LIGHT) 5
CHECKING ALTERNATOR FREQUENCY WITH AN ELECTRIC CLOCK 6
VOLTAGE ADJUSTMENT 6
STABILITY ADJUST R8 6

SERVICE & MAINTENANCE

CLEANING 7
GEARBOX LUBRICATION 7
POWER TAKE-OFF SHAFT LUBRICATION 7
BEARING LUBRICATION—MODELS 20AVR1, 28AVR1 7
BEARING LUBRICATION—MODELS 40 AVR1, 55AVR1 7
REPLACING BEARINGS 7
TESTING ROTATING RECTIFIERS 8
VOLTAGE REGULATOR REPAIR OR REPLACEMENT 8
ALTERNATOR DISASSEMBLY AND ASSEMBLY 8

TROUBLESHOOTING

LOCATING TROUBLE 10

VON RUDEN GEARBOX SERVICE DIRECTORY 12

TABLES

TABLE A ALTERNATOR AND GEAR DRIVE DATA ..... Inside Front Cover
TABLE B APPROXIMATE WATTS REQUIRED FOR ELECTRICAL APPLIANCES 2
TABLE C RUNNING AND STARTING CURRENT 115 volt, 60 Hz, SINGLE PHASE MOTORS 3
TABLE D TROUBLESHOOTING CHART 10

ILLUSTRATIONS

FIGURE 1 CUTAWAY VIEW OF ALTERNATOR ASSEMBLY 1
FIGURE 2 ELECTRICAL CONNECTION DIAGRAM, SINGLE PHASE, 4 WIRE AVR1 ALTERNATOR 4
FIGURE 3 ELECTRICAL CONNECTION DIAGRAM, SINGLE PHASE, 12 WIRE AVR1 ALTERNATOR 4
FIGURE 4 TRACTOR DRIVE ALTERNATOR CONNECTED TO TRACTOR POWER TAKE-OFF 5
FIGURE 5 ALIGNING POWER TAKE-OFF SHAFT UNIVERSAL JOINTS FOLLOWING DISASSEMBLY AND ASSEMBLY OF POWER TAKE-OFF SHAFT 5
FIGURE 6 VOLTAGE REGULATOR 6
FIGURE 7 POWER TAKE-OFF SHAFT MAJOR PARTS 7
FIGURE 8 TESTING ROTATING RECTIFIERS WITH TEST LIGHT 8

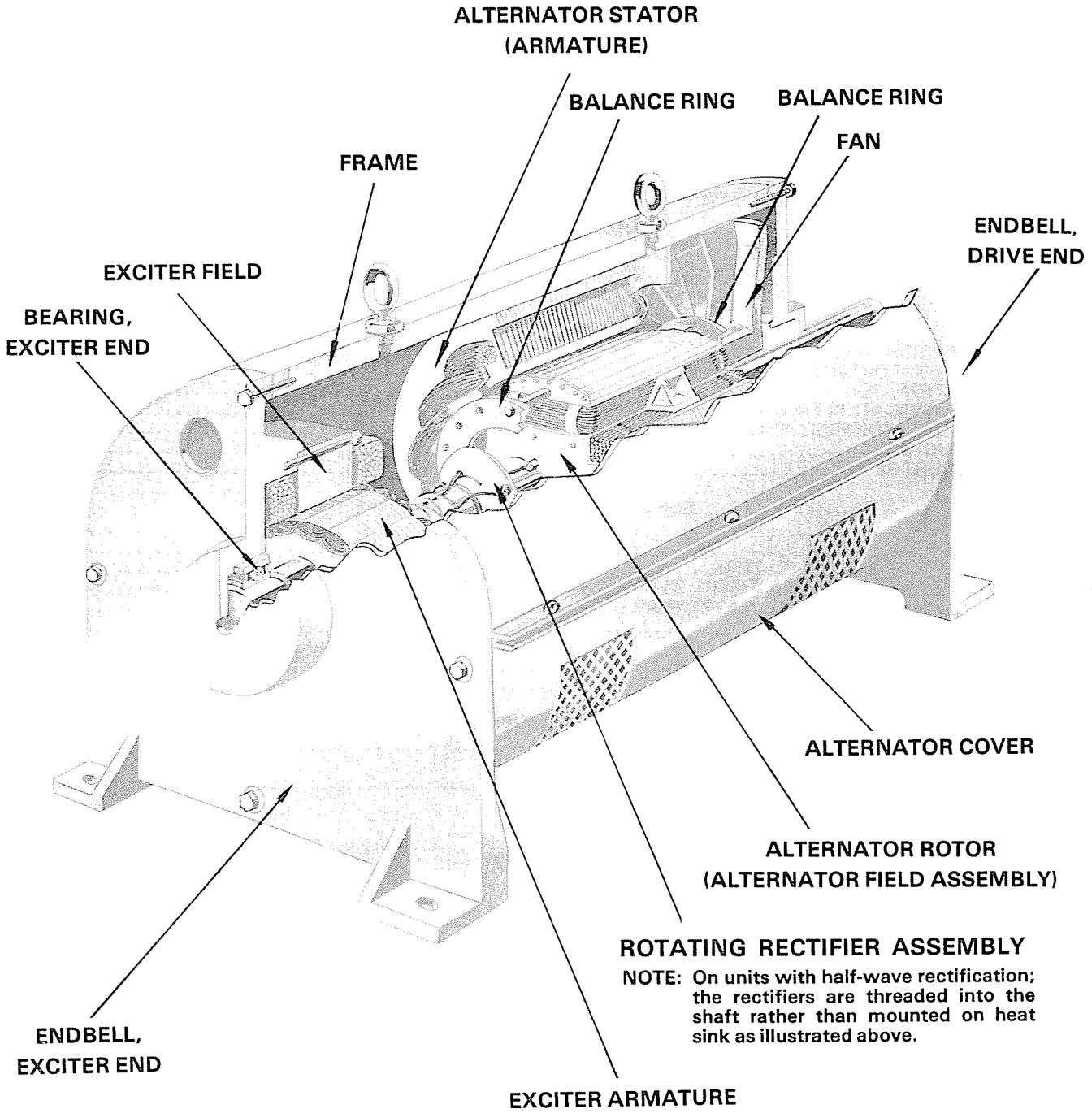

FIGURE 1 ARTIST'S DRAWING, CUTRAWAY VIEW OF MODEL AVR1 ALTERNATOR

INTRODUCTION

Before any Katolight Power Take-off Driven Alternator is shipped from the factory it is inspected and tested for performance. No unit is shipped unless it produces its rated capacity. When unpacking the machine, inspect it carefully making certain no damage occured in transit. If damage is noted, notify the transportation company immediately giving complete details as to the nature of the damage. Units are generally shipped with lubrication in the gearbox. Before placing the unit in operation check to make sure that the lubrication is in gearbox. If not, fill Von Ruden gearbox with 1¼ lbs. EP90 gear oil. If unit has Apex gearbox, fill with 2½ lbs. EP90 gear oil. Maintain oil level on either gearbox slightly below check plug.

If upon installation a new alternator does not work properly, check all electrical connections and the alternator

nameplate for correct operating sped. Observe the following precautions whenever operating your Power Take-Off Driven Alternator.

CAUTION

DISENGAGE PTO WHENEVER TRACTOR IS IDLING. RUNNING ALTERNATOR UNDER SPEED COULD RESULT IN DAMAGE TO VOLTAGE REGULATOR AND ALTERNATOR.

PROVIDE SUFFICIENT VENTILATION. DO NOT OPERATE TRACTOR IN ENCLOSED AREA. EXHAUST GASES CONTAIN CARBON MONOXIDE, AN ODERLESS, DEADLY POISON.

STOP TRACTOR BEFORE FILLING WITH GASOLINE. AVOID SPILLING GAS ON HOT ENGINE, A FIRE AND SERIOUS INJURY COULD OCCUR.

IN APPLICATIONS WHERE ALTERNATOR IS CONNECTED TO SERVICE NORMALLY SUPPLIED BY COMMERCIAL POWER, INSTALL A TRANSFER SWITCH. FAILURE TO OBSERVE THIS PRECAUTION COULD RESULT IN ELECTROCUTION OF PERSONNEL SERVICING COMMERCIAL POWER LINES.

AVOID EXPOSURE TO ALTERNATOR VOLTAGE. WHENEVER MAKING ELECTRICAL CONNECTIONS OR REPAIRING ALTERNATOR, FIRST STOP TRACTOR. FAILURE TO OBSERVE THIS PRECAUTION COULD RESULT IN ELECTROCUTION.

PARTS ORDERING INSTRUCTIONS

To avoid errors or delay in filling your parts order, please furnish the following information.

1. Always give MODEL NUMBER, TYPE NUMBER, and SERIAL NUMBER.
2. Give the item part number and description. Give the quantity required of each item. DO NOT ORDER BY REFERENCE NUMBER OR GROUP NUMBER. If an old part cannot be identified return the part postage prepaid to your distributor or KATOLIGHT CORPORATION. Write a letter to the same address stating the reason for returning the part.

LOCATION

Provide sufficient ventilation. Do not operate tractor driven alternator in an enclosed area.

For best service the following factors should be taken into consideration:

1. Dirt: Foreign material such as dust, lint and abrasive particles cause excessive wear of bearings and clog ventilating ports causing excessive heating of unit.
2. Moisture: All electrical equipment should be protected from excessive moisture. Excessive moisture could result in short circuits and grounds.

If the unit is to be left in the open, it should be covered whenever it is not in use. Ventilating ports should be cleaned periodically.

DETERMINING THE LOAD

The load can be determined by adding the wattage requirements for each light, appliance and motor which will be operated by the power plant. The following chart lists approximate watts required for various electrical appliances.

TABLE B
APPROXIMATE WATTS REQUIRED
FOR ELECTRICAL APPLIANCES

APPLIANCE	WATTS
Lamp Bulbs	See Wattage on bulbs
Radio	40 - 200
Television	150 - 300
Vacuum Cleaner	200 - 250
Automatic Washer	400
Air Conditioner (¾ Ton)	1,250
Refrigerator	325
Food Freezer	300
Furnace (Oil)	700
Deep Well Pump	2,000
Electric Range	600 - 10,000
Hot Plate (per burner)	600 - 1,200
Toaster	600 - 1,130
Water Heater	1,500 - 5,000
Glow Heater	600 - 1,200
Heating Pad	40 - 80
Sun Lamp	250 - 1,000
Flat Iron	600 - 1,200
Laundry Dryer	4,750
Electric Heat System	5,000 - 20,000

USE OF ELECTRIC MOTORS

Electric motors require much more current to start than to run. Most fractional horsepower motors take about the same amount of current to run them whether they are of the Repulsion-Induction, Capacitor, or Split-Phase type. Starting current however, varies greatly. Repulsion-Induction motors are the easiest to start and usually require 1½ to 2½ times as much current to start as to run them. Capacitor motors usually require 2 to 4 times as much current to start them as to run them. Split-Phase motors are hardest to start with starting current about 5 to 7 times the running current.

Table C shows the approximate running current for single phase 115 volt motors.

NOTE

IN APPLICATIONS WHERE SEVERAL MOTORS ARE TO BE STARTED EXCESSIVE OVERLOAD MAY BE AVOIDED BY STARTING THEM ONE AT A TIME, STARTING THE MOTOR THAT REQUIRES HIGHEST RUNNING AND STARTING CURRENT FIRST.

INSTALLATION

MOUNTING ALTERNATOR

The alternator must be solidly bolted to a foundation, platform or bed of a trailer. All four feet on the alternator must contact the foundation or trailer bed. If space exists between a mounting foot and the foundation or trailer, first install shims to take up space and then install and tighten bolts.

TABLE C
TYPICAL RUNNING AND STARTING CURRENT
FOR 115 VOLT, 60 Hz, SINGLE PHASE MOTORS

Horsepower	Running Amps All Types	Starting Amperes		
		Repulsion-Induction	Capacitor	Split-Phase
1/16	3.2	5 to 8	6 to 13	16 to 22
1/4	4.5	7 to 12	9 to 18	22 to 32
1/3	5.2	8 to 17	10 to 21	26 to 35
1/2	7.2	11 to 18	14 to 29	
1	13	20 to 33	26 to 52	

GEARBOX LUBRICATION

Check oil level. If not full, fill with EP 90 Gear Oil. Maintain oil level slightly below check plug. **DO NOT OVERFILL.** Overfilling will cause heating and possible seal failure.

CONNECTING ALTERNATOR TO LOAD

Load can be taken from receptacles, a cord set or by connecting the alternator into an existing service.

Load taken from receptacles should not exceed receptacle rating and should never exceed alternator rating. The 115 volt duplex receptacles are rated 20 amperes while the 230 volt receptacles are rated 50 amperes.

Load taken from the 230 volt cord set when it is incorporated should not exceed 50 amperes.

When the alternator is connected into an existing service normally supplied by commercial power a transfer switch must be used.

NOTE	INSTALL ELECTRICAL LINES AND GROUND IN ACCORDANCE WITH APPLICABLE ELECTRICAL CODES

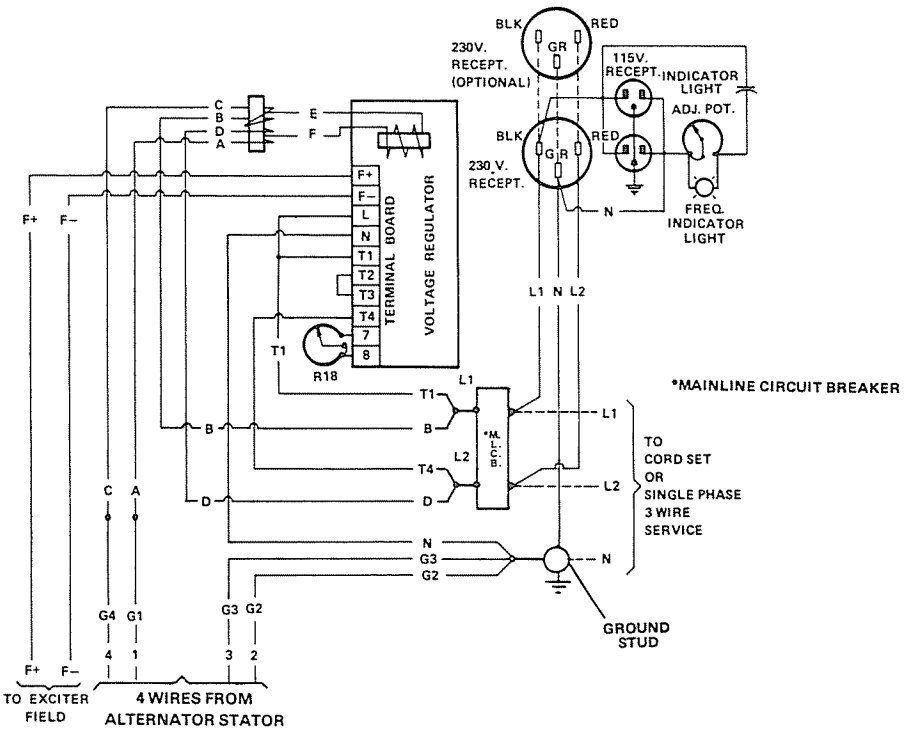

FIGURE 2 ELECTRICAL CONNECTION DIAGRAM, SINGLE PHASE, 4 WIRE AVR-1 ALTERNATOR

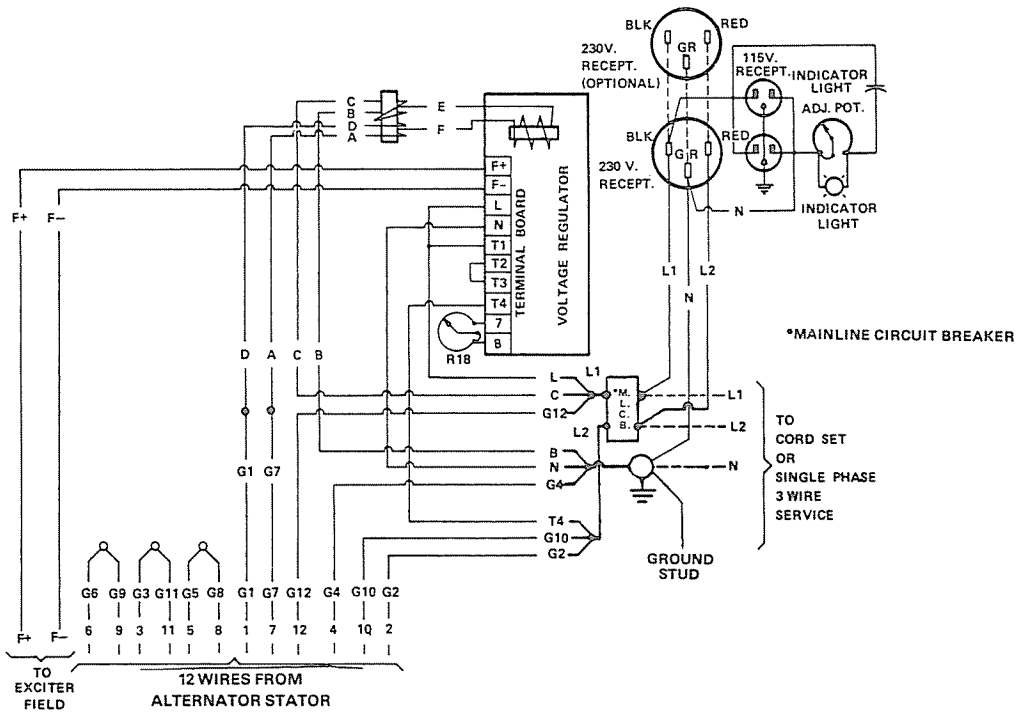

FIGURE 3 ELECTRICAL CONNECTION DIAGRAM, SINGLE PHASE, 12 WIRE AVR-1 ALTERNATOR

OPERATION

PRECAUTIONS PRIOR TO INITIAL STARTING

Before starting the alternator set for the first time the unit should be inspected as follows:

1. Check electrical connections to load. Refer to the electrical connection diagrams.
2. Remove cover surrounding alternator. Turn rotor manually and visually inspect for sufficient clearance between rotating and stationary parts.
3. Check gearbox oil level.

ALIGNING ALTERNATOR WITH TRACTOR POWER TAKE-OFF

The double universal joint construction of the power take-off drive shaft allows for considerable angular misalignment between the gearbox and the tractor power take-off shaft. As shown in Figure 4 the angular misalignment of the universal joints if at all possible should not be more than 15 degrees. If the power take-off drive shaft is taken apart make certain the drive shaft universal joint knuckles are in time with one another as shown in Figure 5. If the drive shaft universal joint knuckles are not in time chattering will occur which will cause a flicker in the electrical output. The same flicker will also occur if the angle of the drive shaft from the alternator to the tractor power take-off shaft lock pin is properly engaged and the removable power take-off shaft shields are installed before operating the unit.

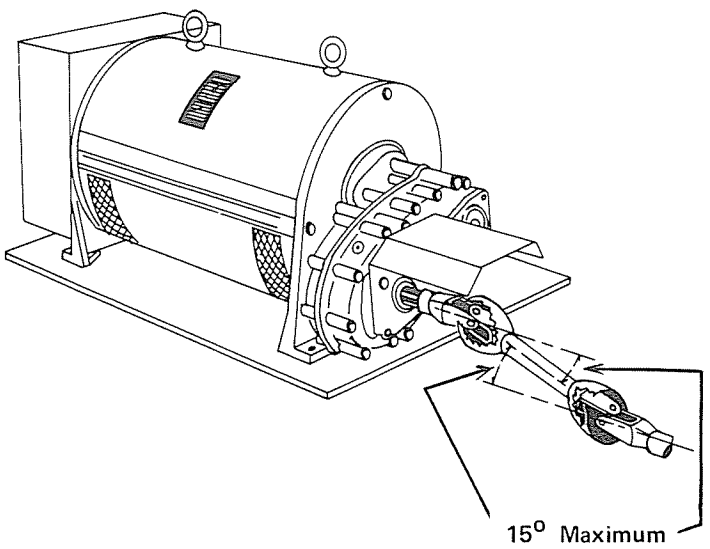

FIGURE 4 TRACTOR DRIVE ALTERNATOR CONNECTED TO TRACTOR POWER

OPERATING ALTERNATOR

1. Make certain load does not exceed alternator rating and is connected properly. Refer to Figures 2 and 3.
2. Make certain unit is at rated speed and generating desired voltage. Proceedures for adjusting indicator light and voltage are contained in the following paragraphs. Speed may dip slightly when load is applied and, therefore, tractor throttle setting with full load applied may have to be increased slightly from no-load setting.
3. Make certain gearbox has sufficient grease. Fill with EP 90 Gear Oil to slightly below check plug.
4. When the generator is started in extremely cold weather, start the tractor and with the tractor idling, engage the power take-off and let the clutch out slowly. Make certain the gearbox and alternator rotor turn freely.

CAUTION
Do not run at idle speed more than one minute.

Running alternator underspeed could result in damage to voltage regulator and alternator.

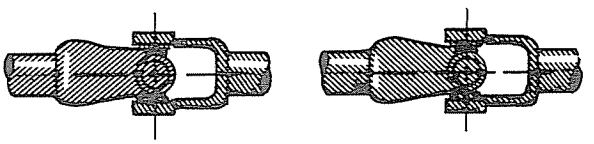

RIGHT Universal Joint Knuckles in same plane (Parallel)

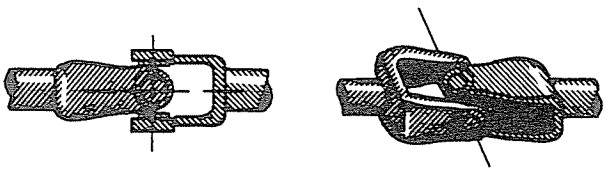

WRONG Universal Joint Knuckles NOT in same plane (NOT Parallel)

FIGURE 5 ALIGNING POWER TAKE-OFF SHAFT UNIVERSAL JOINTS FOLLOWING DISASSEMBLY AND REASSEMBLY OF POWER TAKE-OFF SHAFT

HOW TO SET COMBINATION FREQUENCY AND VOLTAGE INDICATOR (LIGHT)

This indicator should be checked for proper setting when the unit is operated for the first time. Adjust as follows:

1. Remove the cover from the terminal box cover. The potentiometer which controls the light is located on the light assembly mounted in the upper left hand corner of the terminal box.

2. Connect an AC Voltmeter to the alternator output (load) lines.

3. Start unit and bring up to alternator shaft speed of 1800 RPM. Check with accurate hand tachometer held on the alternator shaft where it protrudes through the gear case or hold tachometer on alternator shaft at terminal box end of machine.

4. Turn voltage adjust located on regulator assembly to point where desired voltage is indicated on voltmeter.

5. Observe if indicator light is on. If it is not on, turn light adjust potentiometer until light comes on. If light is on, turn light potentiometer until light comes on. If light is on, turn light potentiometer until light goes off and then turn it slowly back to point where light comes back on.

CHECKING ALTERNATOR FREQUENCY WITH AN ELECTRIC CLOCK

Alternator frequency can be checked with an electric clock instead of a tachometer as follows:

1. Plug an electric clock with second hand into 115 volt receptacle.

2. Check sweep of electric clock second hand with sweep of second hand on wrist or pocket watch.

3. If frequency is 60 cycles per second the second hand on the electric clock will move at the same rate as the second hand on watch.

4. If the alternator is underfrequency (underspeed) the electric clock second hand will move slower than the second hand on the watch. If the alternator is over-frequency the clock second hand will move faster than the second hand on the watch.

5. Set engine throttle to point where second hand on the electric clock moves at the same speed as the second hand on the watch.

VOLTAGE ADJUSTMENT

Two potentiometers are included which provides a means of adjusting output voltage, the Auto Voltage Adjust Potentiometer and Voltage Range Adjust Potentiometer. Adjustment when required should be made as follows:

1. Make certain generator is at rated speed of 1800 RPM (60 cycles per second output frequency).

2. Turn Auto Voltage Adjust until desired voltage is indicated on voltmeter, or if combination voltage and frequency light has been set turn Auto Voltage Adjust to point where light comes on.

3. If desired voltage cannot be obtained by turning Auto Voltage Adjust also turn Voltage Range Adjust.

STABILITY ADJUST R8

This resistor controls system stability and response of the voltage regulator. It was set at the factory and generally should not need further adjustment. Only adjust Stability Adjust R8 if instability or slow response occurs during operation.

Turning Stability Adjust clockwise increases negative feedback, therefore increasing stability and response time Stability Adjust should be set so that the output voltage is stable at both no-load and full-load.

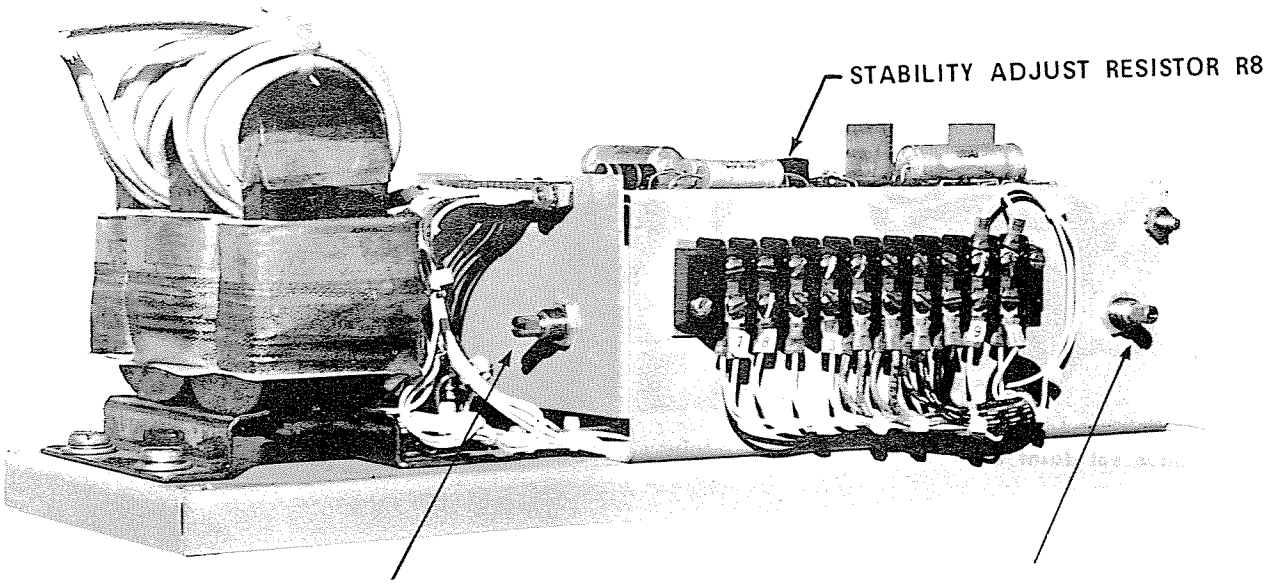

FIGURE 6 VOLTAGE REGULATOR

SERVICE & MAINTENANCE

CLEANING

Do not permit ventilating ports to become clogged. Clean periodically.

GEARBOX LUBRICATION

Periodically check level of oil in gearbox. Maintain oil level slightly below check plug. Use EP 90 Gear Oil.

POWER TAKE-OFF SHAFT LUBRICATION

Periodically lubricate power take-off shaft. Location of grease points are shown in Figure 5.

BEARING LUBRICATION - MODELS 20AVR1 & 28AVR1

Bearings installed in the models listed above are of the shielded ball bearing type. They were factory packed about ½ full of a high quality ball bearing grease. Under normal operating conditions several years of operation can generally be expected before repacking of the bearings is necessary. However, it is difficult to predict bearing or grease life as each application is different. A noisy bearing can be a sign of either a worn bearing or lack of grease.

If bearings are to be repacked, remove shield from bearing and completely clean remaining lubricant from bearing and bearing housing. Carefully inspect beargin for any signs of wear. Repack bearing approximately ½ full using a high quality ball bearing grease. Grease should be capable of withstanding temperatures to 250°F. Where use in cold weather is required, the grease should lubricate satisfactorily at the lowest ambient temperature.

BEARING LUBRICATION - MODELS 40AVR1/55AVR1

The bearings in the models 40AVR1 and 55AVR1 require periodic replenishment of grease. Grease fittings are installed in bearing housing. The generator outlet box cover must be removed for access to the grease fitting. Under normal operating conditions add about ½ ounce of a high quality ball bearing grease once every 7200 hours of operation or once every 20 months, whichever occurs first. Do not overfill. Stop filling when grease beings to drain from internal parts of alternator.

Grease used should withstand temperatures to 250° F. Where use in cold weather is required, the grease should lubricate satisfactorily at the lowest ambient temperature.

REPLACING BEARINGS

Replacement bearings must be of the same size as originally installed at the factory. The following procedures must be followed:

1. If the bearing requires replacement, the terminal box and alternator endbell must be removed. In order to accomplish this, wiring within terminal box must be disconnected.

2. Replacement bearing must be positioned on the shaft so that bearing inner ring is against the bearing shoulder on the shaft.

3. Bearing should be removed with a puller that applies pressure to the bearing inner ring.

4. Bearings are a press fit on the shaft. Replacement bearing should be heated to 220°to 250 degrees F. in clean, temperature controlled oven before attempting to install them on the alternator shaft.

5. A replacement bearing should be installed on the shaft while it is hot as described above. A sleeve or pipe that applies pressure to the bearing inner ring may be used to tap the bearing into place on the shaft. The sleeve or pipe should never exert pressure on the bearing outer ring.

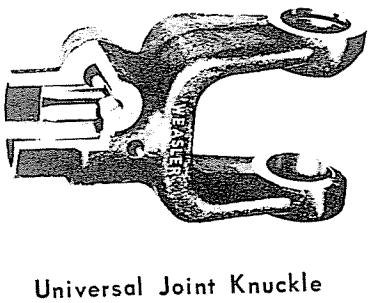

Universal Joint Knuckle

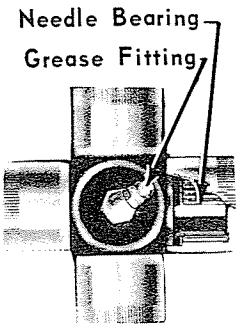

Joint

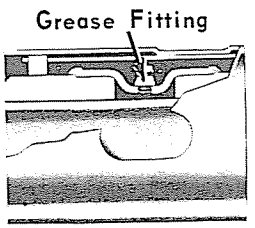

Tubular Shaft
Partial View

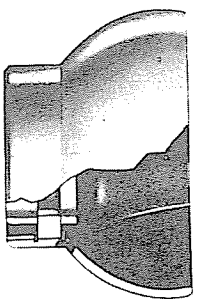

Removable Shield

FIGURE 7 POWER TAKE-OFF SHAFT MAJOR PARTS

TESTING ROTATING RECTIFIERS

Direct current for the alternator field is from the output of rotating rectifiers which are either threaded into the alternator shaft or mounted on a sleeve pressed onto the alternator shaft. They can be tested with a continuity light constructed of two 1½ volt batteries as illustrated in Figure 8.

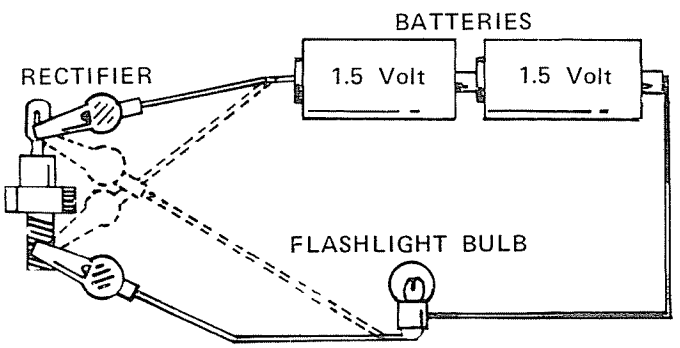

FIGURE 8 TESTING ROTATING RECTIFIERS WITH TEST LIGHT

Test rotating rectifiers as follows:

1. Stop alternator set and remove the cover which surrounds the alternator.
2. Unsolder the wire from the rotating rectifier.

NOTE

When removing lead wire or soldering lead wire back onto the rectifier make certain solder does not drop across rectifier terminal to the case as this would cause rectifier to become shorted.

3. Remove the rectifier from the alternator shaft.
4. Place tester leads across rectifier as shown by solid lines in Figure 8. See if tester bulb lights.
5. Place tester leads across rectifier in the opposite direction as shown by dash lines on Figure 8. See if tester bulb lights.
6. If the tester bulb lights in both steps 4 and 5 the rectifier is probably shorted and should be replaced.
7. If the tester bulb does not light in either steps 4 or 5 it is probably open circuited and should be replaced.
8. Replace any defective rectifiers. Solder lead wires back onto terminal of rectifier and then secure rectifier wires to shaft with tie-down lacing.

VOLTAGE REGULATOR REPAIR OR REPLACEMENT

The function of the voltage regulator is to keep alternator voltage at very near the set value. It does this by changing the amount of field current it supplies the exciter field as the needs of the alternator dictate. An increase in load will normally cause alternator voltage to decrease, the regulator will sense this drop in voltage and supply more field current which will result in restoration of alternator voltage to the set value. A decrease in load will normally cause alternator voltage to rise, the regulator will in this case supply less exciter field current which will result in reduction of alternator voltage to the set value.

Before concluding voltage regulator is defective make certain alternator is at rated speed, voltage adjust potentiometers are set properly and that load does not exceed rating of alternator.

Typical alternator system malfunctions which can generally be attributed to voltage regulator malfunction are:

1. Alternator voltage very low — remains at approximately 25% of rated value at no-load.
2. Alternator voltage high and cannot be controlled by turning the voltage adjust protentiometer or voltage range potentiometer.
3. Alternator output voltage unstable or poor response. Adjustment of Stability Adjust R8 as described in "Operation" section of this manual could correct this defect.

Procedures for testing various components of the voltage regulator are contained in the voltage regulator instruction manual. If failure of components mounted on the printed circuit board occurs replacement of the complete printed circuit board assembly is recommended. If the entire voltage regulator is replaced, make certain replacement regulator is connected properly. Refer to the wiring diagrams contained in the installatin section of this manual.

ALTERNATOR DISASSEMBLY AND ASSEMBLY

Disassembly of alternator can be accomplished as follows:

1. Refer to Figure 1 for part location.
2. Remove bolts securing gear case to alternator. Carefully remove gear case from alternator shaft.
3. Disconnect leads within alternator terminal box. Remove bolts holding terminal box to alternator.
4. Remove bolts holding endbells to alternator frame and stator assembly. Pull endbells.
5. Alternator rotor can be removed from fan end without removing fan.
6. Do not remove exciter field from endbell unless it is to be replaced.

7. Do not remove the alternator bearing if it does not require replacement.

Assembly of the alternator can be accomplished as follows:

1. If a new bearing will be installed refer to preceeding paragraphs titled "Replacing Bearings".
2. If exciter field assembly was removed from endbell install exciter field with lead wires toward endbell.
3. Slide alternator rotor into stator assembly.
4. Install endbells.
5. Install terminal box and reconnect wires. Refer to electrical diagrams contained in the "Installation" section of this manual.
6. Carefully install gear case.

TROUBLESHOOTING

LOCATING TROUBLE

If the alternator does not appear to be producing voltage, check the load circuit breakers or fuses. If a circuit breaker is tripped, reduce the load and reset the breaker. If fuses are blown, replace the fuses. A common cause of poor alternator operation is underspeed. High voltage can be caused by overspeed. Speed can be easily checked with a frequency meter or tachometer.

The following Troubleshooting Chart lists various symproms of poor alternator operation as well as possible causes and means of correcting deficiencies.

TABLE D
TROUBLESHOOTING CHART

SYMPTOM	POSSIBLE CAUSE	POSSIBLE REMEDY
No Output Voltage	Engine speed too low.	Increase speed until alternator produces 60 cycle.
	Short circuit in load.	Disconnect load. Check motors, appliances and load leads for cause of short circuit.
	Defective receptacles.	Remove terminal box cover & test with test light.
	Loose terminal connections or shorted lead wires in control box.	Remove terminal box cover. Check terminal connections. Check for bare wires.
	Open fuses or circuit breakers.	Replace fuses. Reset circuit breakers.
	Voltage regulator defective.	Contact KATOLIGHT CORPORATION Sales and Service Office, Mankato, Minnesota.
	Open or short circuited leads.	Remove alternator cover and check exciter field leads and leads from exciter armature to rotating rectifiers and alternator field coils. Make certain the tie-down lacing holding exciter leads to shaft is securely wrapped and tied before placing unit back in operation.
	Open or short circuited voltage adjust rheostat or range adjust rheostat.	Check rheostats. Replace if defective.
	Open or short circuited exciter field coils, exciter armature windings, alternator field coils or alternator stator windings.	Consult KATOLIGHT CORPORATION Sales and Service Office, Mankato, Minnesota.

TABLE D TROUBLESHOOTING CHART CON'T.

SYMPTOM	POSSIBLE CAUSE	POSSIBLE REMEDY
Low Voltage	Engine speed too low.	Increase engine speed until alternator produces 60 cycle output.
	Voltage adjust potentiometer not properly adjusted.	Adjust as described in "Operation" section of this manual.
	Alternator Overloaded.	Reduce load to rated value. Make certain alternator is not overloaded by unbalanced load.
	Short circuit in load.	Remove load. Check appliances and motors for point of short circuit.
	Defective voltage regulator or rotating rectifiers.	Consult KATOLIGHT CORPORATION Sales and Service Office, Mankato, Minnesota, if voltage regulator is defective. Test rotating rectifiers.
High Voltage	Engine speed too high.	Decrease engine speed until alternator produces a 60 cycle output.
	Voltage adjust rheostat or range adjust rheostat not set correctly.	Set rheostat. Refer to "Operation" section of this manual.
	Defective voltage regulator.	Contact KATOLIGHT CORPORATION Sales and Service Office, Mankato, Minnesota.
Poor Voltage Regulation	Load in excess of alternator rating.	Reduce load.
Continuous Voltage Fluctuation	Engine speed not constant	Engine may not have enough power or engine governor may be worn or improperly adjusted. Set or repair defective governor.
Vibration & Noise	Defective bearings.	Replace bearing
	Gearbox dry or overfilled.	Check gearbox oil level.
	Power take-off mis-alignment excessive or universal joint dry or worn.	Correct defects. Refer to "Operation" section of this manual for alignment procedures.

FIVE YEAR P.T.O. DRIVEN ALTERNATOR LIMITED WARRANTY

KATOLIGHT warrants to the original purchaser that the product delivered herewith, so far as it has been manufactured, engineered or assembled by KATOLIGHT, is free from defects in material and workmanship, and will perform under normal standby use and service for a period of five years from date of shipment from KATOLIGHT.

KATOLIGHT liability under the warranty specified herein shall be limited to the replacement or repair of the product, at the option of KATOLIGHT, or its authorized service station. This warranty does not apply to accessories supplied, but not manufactured by KATOLIGHT, which in such cases, the original equipment manufacturer's warranty will be applicable. This warranty does not obligate KATOLIGHT to bear the cost of labor or transportation charges in connection with the repair or replacement of defective products, nor shall it apply to a product upon which modifications, repairs or alterations have been made. This warranty shall apply only when the equipment or product has been properly installed, serviced and operated under normal standby conditions, in accordance with the instructions provided for the specific units.

KATOLIGHT shall not be liable for any claim greater in amount than the purchase price of the product, in respect of which such claim is made, and in no event shall KATOLIGHT be liable for any special, indirect or consequential damages.

THERE ARE NO EXPRESS WARRANTIES OTHER THAN THOSE DESCRIBED HEREIN. NO WARRANTIES SHALL BE IMPLIED OR OTHERWISE CREATED UNDER THE UNIFORM COMMERCIAL CODE, INCLUDING, BUT NOT LIMITED TO, A WARRANTY OF MERCHANTABILITY, AND A WARRANTY OF FITNESS FOR A PARTICULAR PURPOSE.

OPERATING INSTRUCTIONS and SERVICE INFORMATION

For KATOLIGHT AVR Series

PTO Driven Alternators

MODELS

28AVR3, 40AVR3, 55AVR3, 75AVR3,
100AVR3(1), 125AVR3(1), 150AVR3

Read this book before operating the alternator and save for future reference.

Write the Model number, Type number and Serial number of the alternator in the spaces below. Be sure to give these numbers when ordering parts or corresponding about the alternator.

_____
Alternator Model

_____
Serial

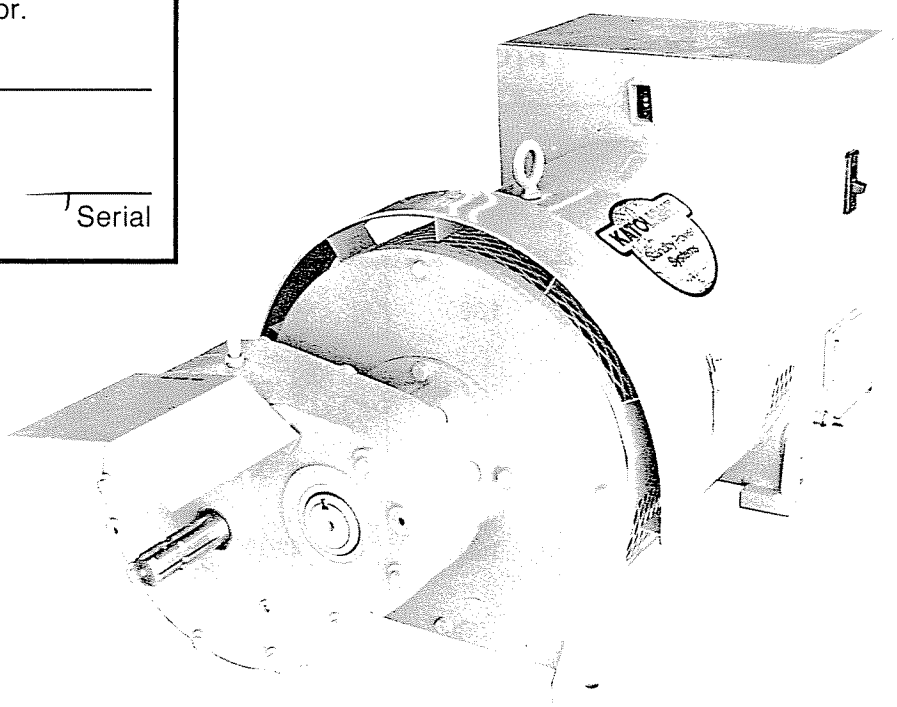

KATOLIGHT CORPORATION
Mankato, MN 56001 Phone: (507) 625-7973

Form AVRM3-286

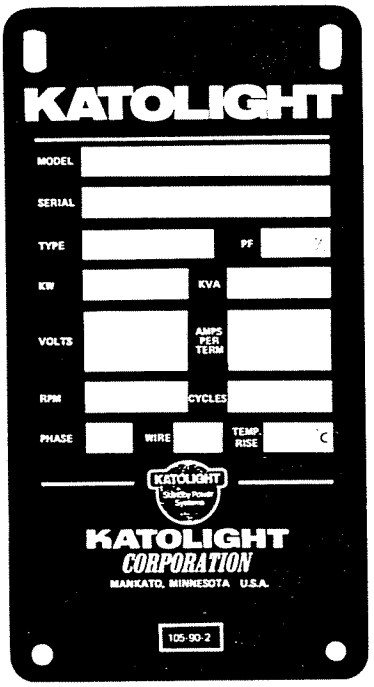

ALTERNATOR DATA

The alternators described in this manual are 3-phase, 120/240V, 120/208V or 277/480V as specified, 1800 RPM revolving field brushless type with Automatic Voltage Regulation. Output voltage may be varied by turning the voltage adjust potentiometer.

Standard equipment includes: Speed Monitor Light, Automatic Voltage Regulator, Brushless Revolving Field Type Alternator, Mainline Circuit Breaker, 15 Amp, 120 Volt 3 Wire Duplex Receptacle, 50 Amp 240 Volt 4 Wire Receptacle, Full Load Connector, Safety Shield, Lifting Eyes, Helical Gears, Mounting Base, Gear Lube, Grounding Terminal, 1800 RPM Slow Speed, Rodent Screen & Drip Proof Design.

TABLE A
ALTERNATOR AND GEAR DRIVE DATA

Three phase, 60 Hz, 1800 RPM						
Model No.	Watts	PTO Speed	Speed Increaser Part Number	Power Shaft		
				Part No.	HP	Size
28 AVR3	28,000	540	43000	44811	60-80	Comp. 29" Ext. 45½"
40 AVR3	40,000	540	43004	44806	125-145	Comp. 29" Ext. 43"
40 AVR3	40,000	1000	43002	44812	125-145	Comp. 29" Ext. 43"
55 AVR3	55,000	540	43004	44806	125-145	Comp. 29" Ext. 43"
55 AVR3	55,000	1000	43002	44812	125-145	Comp. 29" Ext. 43"
75 AVR3	75,000	1000	43002	44812	125-145	Comp. 29" Ext. 43"
100 AVR3	100,000	1000	43008	44803	220/250	Comp. 33" Ext. 51"
125 AVR3	125,000	1000	43008	44803	220/250	Comp. 33" Ext. 51"
150 AVR3	150,000	1000	43008	44803	220/250	Comp. 33" Ext. 51"

TABLE OF CONTENTS

ALTERNATOR DATA	Inside front cover
INTRODUCTION	2
DETERMINING YOUR SPECIFIC LOAD	2
HOW ELECTRIC MOTORS ARE CLASSIFIED, AND WHAT THEIR RATINGS MEAN	2
INSTALLING THE ALTERNATOR	3
Mounting the alternator	3
Aligning alternator with tractor power take-off	3
Connecting alternator to load	4
Gearbox lubrication	4
Before starting	4
OPERATING THE ALTERNATOR	4
Checking alternator output voltage	5
Alternative method of checking frequency	5
Voltage regulator function	5
Voltage regulator replacement	5
Exciter field voltage	5
ELECTRICAL SERVICE AND MAINTENANCE	5
Testing the rotating rectifier	5
Removing and installing diodes	6
Restoring residual magnetism	6
MECHANICAL SERVICE AND MAINTENANCE	8
Cleaning	8
Replacing bearings	8
Alternator disassembly and assembly	8
AVR CUTAWAY DRAWING	9
LOCATING TROUBLE	10
Trouble shooting chart	10 - 11
PARTS ORDERING INSTRUCTIONS	11

INTRODUCTION

Before any Katolight PTO Driven Alternator is shipped from the factory the alternator is inspected and tested for performance. No unit is shipped unless it produces its rated capacity. Carefully unpack the unit and visually inspect it for damage. If it is damaged, check with the transportation carrier for adjustment of the damage. Before placing the unit in operation, check to make sure that the lubrication is in the gearbox. If empty, remove level check plug and fill with EP90 weight gear oil to check plug level.

If upon installation a new alternator does not work properly, check all electrical connections and the alternator speed before concluding the alternator is defective.

DETERMINING YOUR SPECIFIC LOAD

The load can be determined by adding the wattage requirements for each light, appliance and motor which will be operated by the unit. The following chart lists approximate running or operating watts required for various electrical appliances.

TABLE B
APPROXIMATE WATTS REQUIRED
FOR ELECTRICAL APPLIANCES

APPLIANCE	WATTS
Lamp Bulbs	See wattage on bulbs
Radio	40-200
Television	150-300
Vacuum Cleaner	200-750
Automatic Washer	400
Air Conditioner (¾ Ton)	1,250
Refrigerator	325
Food Freezer	300
Furnace (Oil)	700
Deep Well Pump	2,000
Electric Range	600-10,000
Hot Plate (per burner)	600-1,200
Toaster	600-1,130
Water Heater	1,500-5,000
Glow Heater	600-1,200
Heating Pad	40-80
Sun Lamp	250-1,000
Flat Iron	600-1,200
Laundry Dryer	4,750
Electric Heat System	5,000-20,000

Check all appliance nameplates for exact ratings.

HOW ELECTRIC MOTORS ARE CLASSIFIED, AND WHAT THEIR RATINGS MEAN

Electric motors require more current (amperes) starting than running. Split-phase motors are difficult to start and require 5 to 10 times as much current to start as to run, dependent on the NEMA code letter rating. Capacitor motors require 2 to 4 times as much current to start as to run. Repulsion Start Induction Motors require 1½ to 2½ times as much current to start as to run.

The chart below shows the approximate current required to run and start 120 volt, 60 cycle, NEMA Code F induction motors under average load conditions.

Horse Power	Running Amperes	Starting Amperes
1/6	4.4	7 to 15
1/4	5.8	10 to 15
1/3	7.2	15 to 25
1/2	9.8	20 to 30
1	16.0	40 to 50

The NEMA code letter assigned by the motor manufacturer will govern the starting (locked rotor) current surge. The chart below shows the NEMA code letters and their corresponding range of multipliers for the starting current requirement in amperes.

NEMA Code letter Motor Rating	Kilovolt-Amperes per Horsepower (Locked Rotor)
A	0 – 3.14
B	3.15 – 3.54
C	3.55 – 3.99
D	4.0 – 4.49
E	4.5 – 4.99
F	5.0 – 5.59
G	5.6 – 6.29
H	6.3 – 7.09
J	7.1 – 7.99
K	8.0 – 8.99
L	9.0 – 9.99
M	10.0 – 11.19
N	11.2 – 12.49
P	12.5 – 13.99
R	14.0 – 15.99
S	16.0 – 17.99
T	18.0 – 19.99
U	20.0 – 22.39
V	22.4 – and up

Here is a formula for amps:

The starting current for 1 h.p. Code F 230 V.A.C.

1 x 5.6 = 5.6 KVA inrush

$$\text{Amp} = \frac{\text{KVA}}{\text{Volts}} = \frac{5.6^{10^3}}{230} = 24.3 \text{ amp inrush or starting}$$

Because the heavy surge of current required for starting motors is needed only for an instant, the alternator will not be damaged if it can bring the motor up to speed in a few seconds. If difficulty is experienced in starting motors, turn off all other electircal loads and, if possible, reduce the load on the electric motor.

NOTE

IN APPLICATIONS WHERE SEVERAL MOTORS ARE TO BE STARTED, EXCESSIVE OVERLOAD MAY BE AVOIDED BY STARTING THEM ONE AT A TIME. START THE MOTOR THAT REQUIRES THE HIGHEST RUNNING AND STARTING CURRENT FIRST.

INSTALLING THE ALTERNATOR

Provide sufficient ventilation. Do not operate tractor driven alternator in a non-ventilated area. Do, however, provide protection from heavy snow or dust which may plug air cleaners and ventilation openings.

For best operation the following factors should be taken into consideration:

1. Dirt – Dust particles and dirt can cause excessive wear, not only to bearings but to all rotating parts of the alternator.

2. Moist or wet conditions are hazardous. In addition, all electrical equipment should be protected from excessive moisture which deteriorates insulation and causes short circuits.

The generator must be stored properly. Protect it from moisture and dirt. If the unit is to be left in the open, it should be covered whenever it is not in use. All ventilating openings should be cleaned periodically and kept clear and open while operating.

MOUNTING THE ALTERNATOR

The alternator must be solidly bolted to a foundation, platform or bed of a trailer. All four feet on the alternator must contact the foundation or trailer bed. If space is left between a mounting foot and the foundation or trailer, shim it to take up the space and then insert and tighten bolts.

ALIGNING ALTERNATOR WITH TRACTOR POWER TAKE-OFF

The double universal joint construction of the power take-off drive shaft allows for considerable angular misalignment between the gearbox and the tractor power take-off shaft. As shown in Figure 1 the angular misalignment of the universal joints, if at all possible, should not be more than 15 degrees. If the power take-off drive shaft is taken apart, make certain the drive shaft universal joint knuckles are in time with one another as shown in Figure 2. If the drive shaft universal joint knuckles are not in time chattering will occur which will cause a flicker in the electrical output. The same flicker will also occur if the angle of the drive shaft from the alternator to the tractor power take-off is more than 15 degrees. Make certain the power take-off shaft lock pin is properly engaged and the removable power take-off shaft shields are installed before operating the unit.

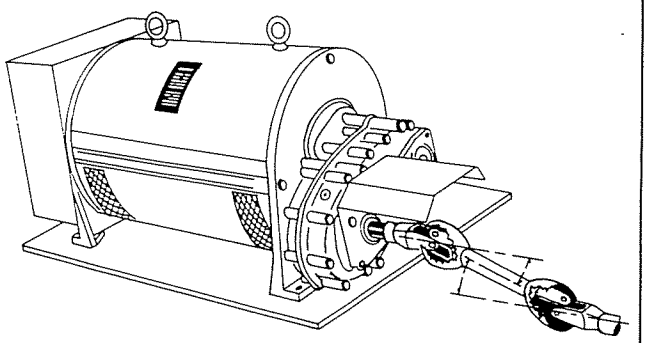

FIGURE 1 - TRACTOR DRIVE GENERATOR CONNECTED TO TRACTOR POWER TAKE-OFF



CORRECT Universal Joint Knuckles in same plane. (Parallel)

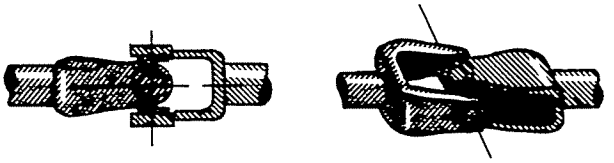

INCORRECT Universal Joint Knuckles NOT in same plane (Not Parallel)

FIGURE 2 - ALIGNING POWER TAKE-OFF SHAFT UNIVERSAL JOINTS

CONNECTING ALTERNATOR TO LOAD

* Load can be taken from recepticals or by connecting the Alternator into an existing service through the full load connector plug.
* Load taken from recepticals should not exceed the respective receptical rating and should never exceed the alternator rating. The 120 VAC duplex receptical is rated for 15 amps and the 240 VAC receptical is rated at 50 amps. Both recepticals and the full load plug are protected by individual overload protection circuit breakers.
* Load taken from the 240 VAC full load cord set should not exceed the full load rating of the alternator.
* When the Alternator is connected into an existing service normally supplied by commercial power an approved TRANSFER SWITCH MUST BE USED. Check your local electrical code requirements before you make any connections.

INSTALLING GROUND WIRE

Ground the Alternator frame and Neutral leg to a solid earth ground. The ground wire should not be smaller than the load line. A ground stud terminal is supplied for this connection.

GEARBOX LUBRICATION

Check oil level. Fill with EP 90 Gear oil if necessary. Maintain oil level slightly below check plug. DO NOT OVERFILL. Overfilling will cause heating and seal damage.

LAST CHECK BEFORE STARTING THE ALTERNATOR

Before starting the alternator for the first time, the unit should be inspected as follows:

1. Check electrical connections to load. (Refer to the electrical connection diagrams.)

2. Remove cover surounding alternator. Turn rotor manually and visually inspect for foreign objects that may have gotten into the unit during shipping and/or uncrating.

3. Check gearbox oil level.

4. Check alignment of PTO shaft.

5. Make sure all protective covers and guards are in place.

OPERATING THE ALTERNATOR

1. Open the mainline circuit breaker or make sure the transfer switch is "Not" in the emergency position. Starting the alternator with the load applied is not recommended.

2. Start Tractor and Engage PTO.

3. Make certain unit is at rated speed and producing desired voltage. Procedures for reading monitor light and voltage are contained in the following paragraphs. Speed may dip slightly when load is applied and therefore, tractor throttle setting with full load applied may have to be increased slightly from no load setting. The load can now be applied to the alternator by closing the mainline circuit breaker or by transfering the transfer switch into the emergency position.

4. Speed Monitor. When the alternator is being driven at proper speed (1800RPM), the Green light on the Speed Monitor will come on. At 1800 RPM, the alternator puts out 60 Hertz (60 cycles per second). The Green light goes off and the upper or lower red light comes on if the speed is too high or too low. The Green light stays on as long as the alternator output is between 59 and 62 Hertz.

   Motors will run satisfactorily if power frequency is within 5% of their nameplate value, as far as torque and heating are concerned. But note that on induction motors and synchronous motors, speed varies in proportion to frequency, hence any equipment that depends on frequency for timing will not be accurate if alternator speed is off.

5. Using the Speed Monitor.

   a. When starting up the power plant, watch the Speed Monitor.

   b. While the unit is coming up to speed, the bottom RED light will come on; continue to increase speed until the Green light comes on.

   c. After load is applied, it may be necessary to readjust entire speed.

   d. Check the Speed Monitor periodically while the unit is in operation, especially after adding or taking off load. If the top red light comes on, reduce speed; if the bottom red light comes on, increase speed.

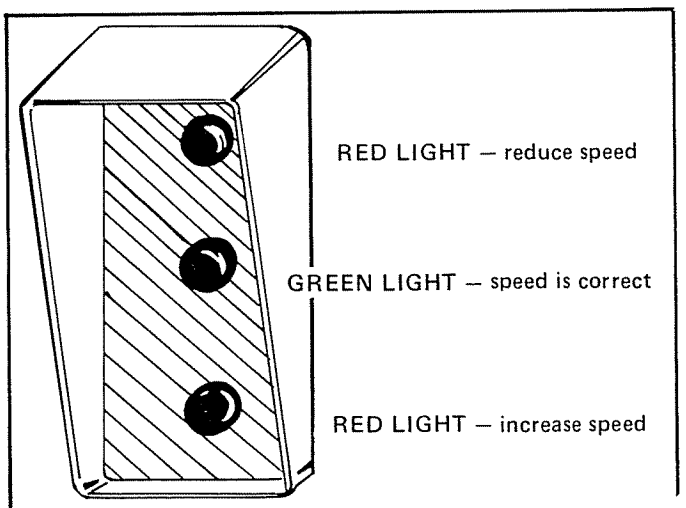

FIGURE 3 - SPEED MONITOR DRAWING

6. When the alternator is used in extremely cold weather, start the tractor and with the tractor idling, engage the power take-off and let the clutch out slowly. Make certain the gearbox and alternator rotor turn freely.

7. FINAL CAUTION:
   DO NOT OPERATE TRACTOR IN NON-VENTILATED AREA.

   STOP TRACTOR BEFORE FILLING WITH FUEL.

   IN APPLICATIONS WHERE ALTERNATOR IS CONNECTED TO SERVICE WHICH IS NORMALLY SUPPLIED BY COMMERCIAL POWER, INSTALL A TRANSFER SWITCH. THIS PRECAUTION PROTECTS PERSONNEL SERVICING COMMERCIAL POWER LINES.

   AVOID CONTACT WITH ALTERNATOR VOLTAGE. WHENEVER MAKING ELECTRICAL CONNECTIONS OR REPAIRING ALTERNATOR, FIRST STOP UNIT.

CHECKING ALTERNATOR OUTPUT VOLTAGE

To check the voltage, use a good quality AC Voltmeter—inexpensive meters often have an error of 10% or more. For best results, choose a meter that will indicate the desired voltage at about ¾ of full scale. For example: to read 240 volts AC, use a 0 to 300 volt AC meter.

On the alternators described in this manual, the line-to-neutral voltage (line 1 [L1] to neutral [N] or L2 to neutral) is one half of the line-to-line voltage (L1-L2). If the two line-to neutral voltages are not equal, it could be due to unbalanced load, a grounded wire, a bad connection, or to a defect in the stator windings.

For personal safety, connect the meter to the generator before starting the engine.

WARNING: DANGEROUS VOLTAGES ARE PRESENT IN THIS UNIT!

ALTERNATIVE METHOD OF CHECKING FREQUENCY

Alternator frequency can be checked with an electric clock and a watch. They should have sweep second hands. Plug an electric clock into the 120 volt receptacle on the alternator. If the second hand on the electric clock moves at the same rate as the second hand on the watch, generator frequency is correct. If the clock lags behind the watch, engine speed is too low; if the clock moves ahead of the watch, the engine is running too fast.

VOLTAGE REGULATOR FUNCTION

Unless the alternator's output voltage is kept within narrow limits, equipment that is powered by it may not operate properly and may be damaged. Motors are usually designed to run satisfactorily only when the voltage at their terminals is within 10% of the nameplate value. In particular, motors will have their torque reduced and will overheat if they are operated at too low a voltage. If the voltage is too high it will cause some devices to burn out.

The purpose of the voltage regulator is to keep the alternator voltage at very near its set value. It does this by supplying the proper amount of direct current to the exciter field, according to the needs of the alternator. An increase in load normally causes the alternator voltage to decrease; the regulator senses this drop in voltage and increases the exciter field current just enough to bring the voltage back up. A decrease in load has the opposite effect—it causes the alternator voltage to go up; the voltage regulator senses this and reduces exciter field current so as to bring the alternator voltage back down to the set value.

The voltage regulator has an adjustment for setting the alternator voltage. This voltage is set at the factory and should require no further adjustment. However, should conditions exist which cause voltage output to change, voltage adjustment can be made with a screwdriver. Refer to the voltage regulator manual for instructions on voltage adjustment, regulator service, etc.

VOLTAGE REGULATOR REPLACEMENT

If the voltage regulator is defective it is advisable to replace the entire circuit board assembly. To reconnect properly, refer to the wiring diagram in the installation section. All connections are made at the terminal strip on the regulator.

EXCITER FIELD VOLTAGE

When there is a problem with the alternator, it is often useful to check the Voltage Regulator output to the exciter field. This voltage can be read at terminals F+ and F— on the regulator. The values should be taken from units running at rated speed (1800 rpm) and rated output voltage (240 VAC) with NO LOAD. Exciter field voltage will normally be higher at no load than when the alternator is loaded. Note that DC meters are required to measure the exciter field voltage and current. Polarity must be observed.

ELECTRICAL SERVICE AND MAINTENANCE

TESTING THE ROTATING RECTIFIER OR DIODE

A rotating rectifier changes the AC that is generated in the exciter armature to DC which is required for the alternator field. The rotating rectifier consists of six individual rectifier diodes. Each individual diode has two terminals. The diodes are threaded into the sleeve shaft of the exciter armature; this makes it possible to test the rectifier diodes with a 3 volt

DC test lamp as shown in Figure 4. Figure 4 shows the test being made with the diode removed entirely from the circuit. It is possible, however, to test the rectifier without disassembling it.

1. Stop the alternator and remove the cover from the outlet box.

2. The connection between the alternator field and the exciter armature can be seen on the exciter armature: the wires are bolted together, covered with an insulating sleeve, and bound to the armature with nylon wraps. Note the position of this connection so that it can be restored properly later. Cut and remove the wraps, being very careful not to damage the armature; remove the sleeve and open the connection.

3. Test each diode as shown in Figure 4.

   a. Open diode. If any diode does not pass current as it should, replace it. Refer to the paragraph on Removing and Installing Diodes.

   b. Shorted diode. If one of the diodes is shorted, it will be difficult to identify it without unsoldering the diode connections. If a short is indicated, unsolder and test diodes one by one until the shorted diode is found.

4. After making sure that good diodes are installed, restore all connections. For securing the alternator field connection, obtain plastic tie wraps similar to the ones installed at the factory and be careful not to damage the armature winding when tying down the wires.

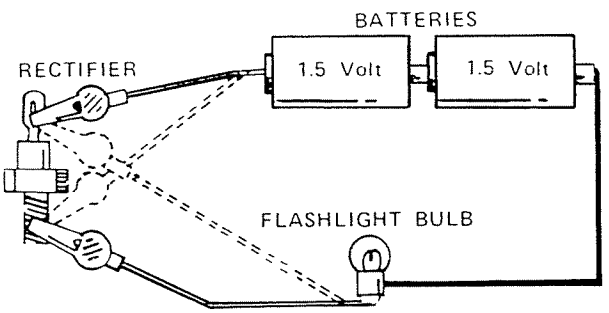

FIGURE 4 - TESTING ROTATING RECTIFIERS WITH TEST LIGHT

REMOVING AND INSTALLING DIODES

The diodes are rugged and will easily withstand the stresses of normal operation, but they can be damaged during removal or installation unless it is done carefully.

1. Do not try to turn the diode without first unsoldering it, since a twisting force on the solder terminal could damage the diode internally.

2. When soldering or unsoldering, do not use any more heat than necessary. The diode can be protected from excessive heat by applying a clip-on heat sink or a long-nosed pliers on the terminal between the soldering iron and the body of the diode.

3. Do not use excessive force when screwing the diode into its mounting. Considerably less force is required here than in tightening bolts of similar size.

RESTORING RESIDUAL MAGNETISM

The cores of the alternator and exciter fields retain a certain amount of magnetism after the power plant has been shut down. This residual magnetism must be present to begin the voltage build-up process when the power plant is started up again. If residual magnetism is lost due to a long idle period or some other cause, it will be necessary to flash the field. This is done by connecting a 12-volt battery across the exciter field for 15-30 seconds. Proceed as follows:

1. Disconnect the two exciter field leads from voltage regulator terminals F+ and F—. The field leads should be marked F2 and F1. See Figure 5.

2. *Disconnect regulator power leads from the voltage regulator.

3. Connect the negative terminal of a 12 volt battery to lead F1.

4. Connect the positive terminal of the battery to lead F2 for a few seconds.

5. Start the engine and bring the unit up to speed.

6. There should be voltage at the alternator output—up to 200 volts AC line-to-line, more or less. If there is still no voltage, contact your local factory representative.

7. If voltage is now present, shut down the unit, disconnect the battery and connect the exciter field to the voltage regulator, F2 to F+ and F1 to F—.

8. Reconnect * regulator power leads.

9. Start up the engine and bring it up to speed; check output voltage.

* Refer to the voltage regulator manual for regulator connections, regulator operation, etc.

FIGURE 5

CAUTION! Exercise extreme caution at all times. Insulate or isolate all AC leads. They are extremely hazardous. Do NOT touch them or allow them to touch anything!

Approximate AC output voltage using 12 volt DC battery as exciter field power.

35LR1	200 VAC
45LR1	200 VAC
55 LR1	200 VAC

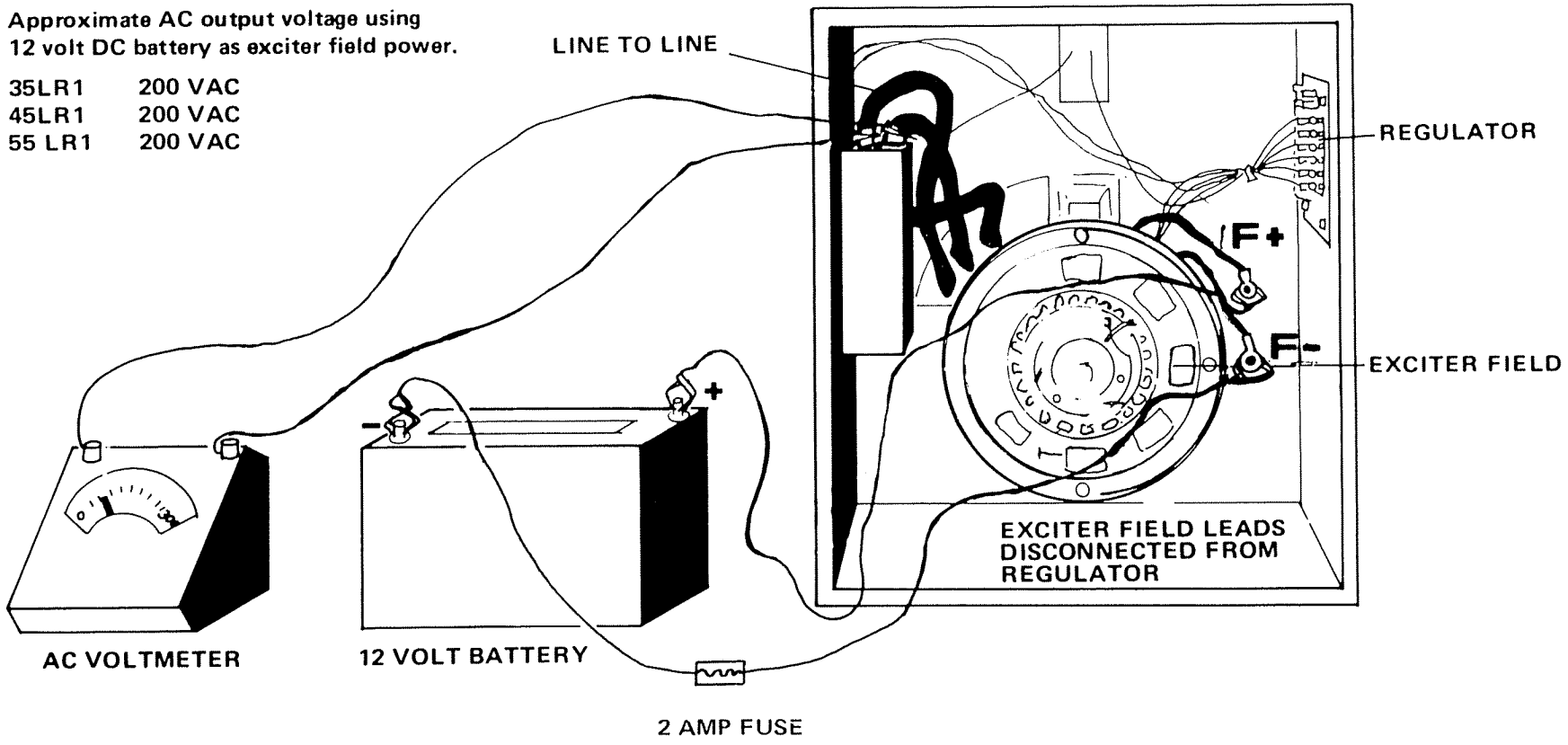

MECHANICAL SERVICE AND MAINTENANCE

CLEANING

Do not permit ventilating ports to become clogged. Clean periodically.

REPLACING BEARINGS

Replacement bearings must be of the same size as originally installed at the factory. These procedures must be followed.

1. If the bearing requires replacement, the terminal box and alternator endbell must be removed. In order to accomplish this, wiring within terminal box must be disconnected.

2. Replacement must be positioned on the shaft so that bearing inner ring is against the bearing shoulder on the shaft.

3. Bearings should be removed with a puller that applies pressure to the bearing inner ring.

4. Bearings are a press fit on the shaft. Replacement bearing should be heated to +220° to +250° F. in a clean, temperature controlled oven before attempting to install them on the alternator shaft.

5. A replacement bearing should be installed on the shaft while it is hot as described above. A sleeve or pipe that applies pressure to the bearing inner ring may be used to tap the bearing into place on the shaft. The sleeve or pipe should never exert pressure on the bearing outer ring.

ALTERNATOR DISASSEMBLY AND ASSEMBLY

Disassembly of alternator can be accomplished by following these steps.

1. Refer to cutaway drawing for location of parts.

2. Remove bolts securing gear cases to alternator. Carefully remove gear case from shaft. A jaw type puller may be required on older units.

3. Disconnect leads within alternator terminal box. Remove bolts holding terminal box to alternator.

4. Remove bolts holding endbells to alternator frame and stator assembly. Pull endbells.

5. Remove exciter armature by disconnecting leads. (Carefully cut ties holding leads to exciter armature windings).

6. Generator rotor can be removed from fan end without removing fan.

7. Do not remove exciter field from endbell unless it is to be replaced.

8. Do not remove bearings if they do not require replacement.

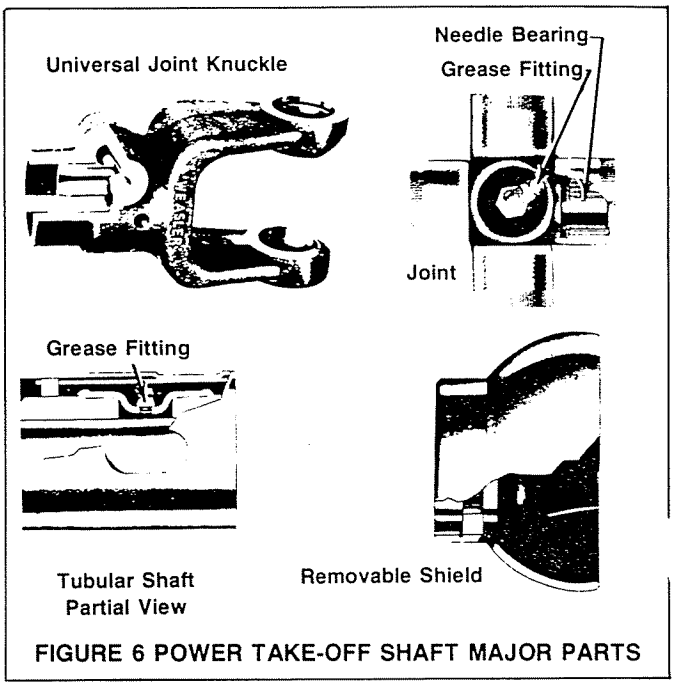

FIGURE 6 POWER TAKE-OFF SHAFT MAJOR PARTS

Assembly of the alternator can be accomplished by following these steps:

1. If new bearings are to be installed refer to preceeding paragraphs titled Replacing Bearings.

2. If exciter field assembly was removed from end bell, install exciter field with lead wires toward endbell.

3. Slide alternator rotor into stator assembly.

4. Install endbells.

5. Install terminal box and reconnect wires. Refer to electrical diagrams contained in the Installation Section of this manual.

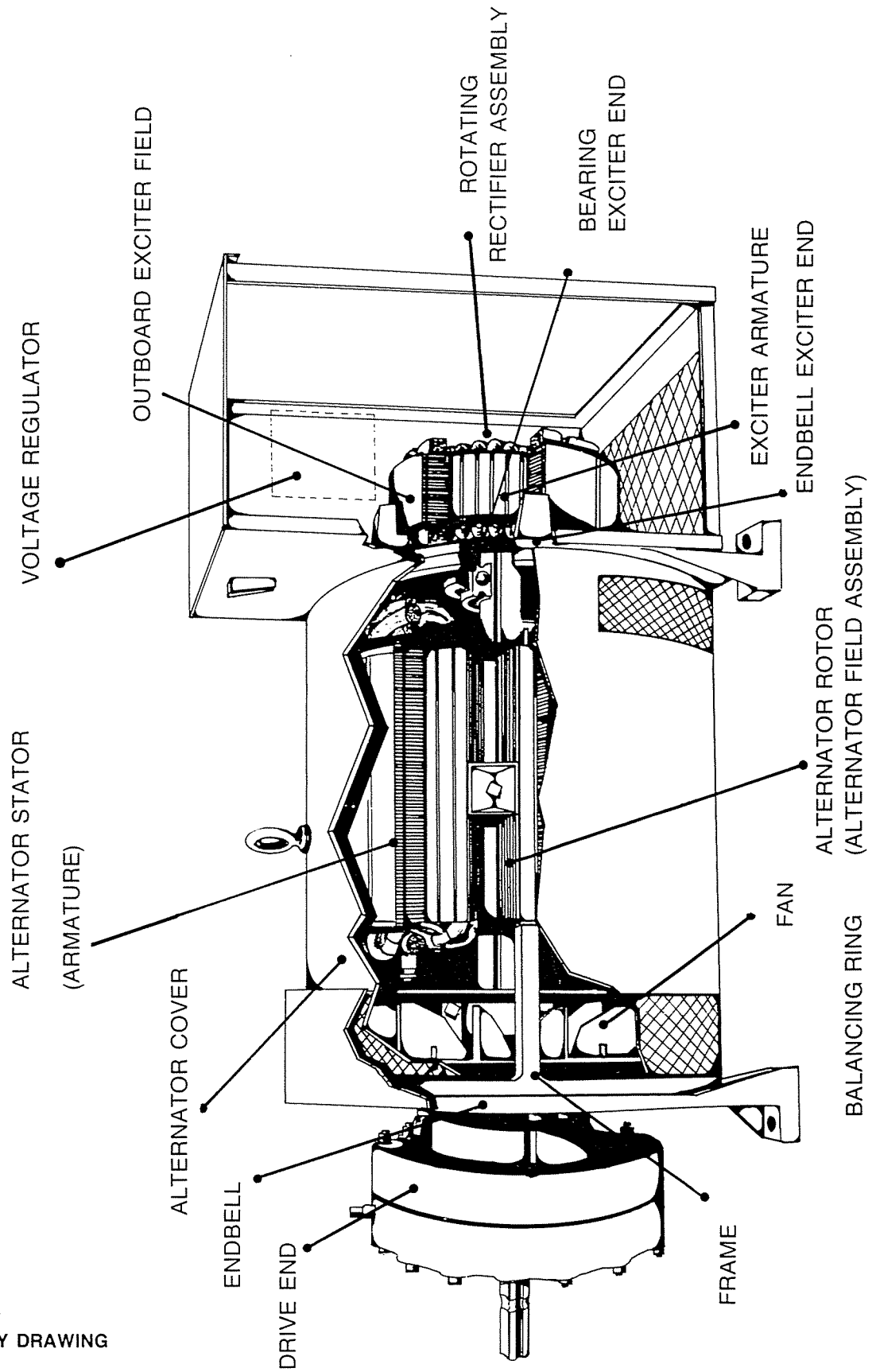

FIGURE 7
CUTAWAY DRAWING

LOCATING TROUBLE

If the alternator does not appear to be producing voltage, check the load circuit breakers or fuses. If a circuit breaker is tripped, reduce the load and reset the breaker. If fuses are blown, replace the fuses. A common cause of poor alternator operation is underspeed. High voltage can be caused by overspeed. Speed can be easily checked with a frequency meter or tachometer.

The following Troubleshooting Chart lists various sympto of poor alternator operation, possible causes and means of correcting deficiencies.

TABLE C
TROUBLESHOOTING CHART

SYMPTOM	POSSIBLE CAUSE	POSSIBLE REMEDY
No Output Voltage.	Engine Speed too low.	Increase speed until alternator produces 60 cycles.
	Short Circuit in load.	Disconnect load. Check motors, appliances and load leads for short circuit.
	Open fuse on voltage regulator.	Check fuse on voltage regulator. If burned open install new fuse of same voltage.
	Defective receptacles.	Remove terminal box cover and test with test light.
	Loose terminal connections or shorted lead wires in control box.	Remove terminal box cover. Check terminal connections. Check for bare wires.
	Open fuses or circuit breakers.	Replace fuses. Reset circuit breakers.
	Voltage regulator defective.	Contact KATOLIGHT CORPORATION Sales and Service Office—Mankato, MN.
	Open or short circuited leads.	Remove alternator cover and check exciter field leads. Check leads from exciter armature to rotating rectifiers and alternator field coils. Make certain the tie down lacing holding exciter leads to shaft is securely wrapped and tied before placing unit back in operation.
	Open or shorted voltage adjust rheostat.	Check rheostat.
	Open or short circuited exciter field coils exciter armature windings, alternator field coils or alternator stator windings.	Consult KATOLIGHT CORPORATION Sales and Service Office—Mankato, MN.

CONTINUED

TABLE C
TROUBLESHOOTING CHART CONTINUED

SYMPTOM	POSSIBLE CAUSE	POSSIBLE REMEDY
Low Voltage	Engine speed too low.	Increase engine speed until alternator produces 60 cycle output.
	Voltage adjust rheostat not properly adjusted.	Adjust to rating.
	Alternator Overloaded.	Reduce load to rated value. Make certain alternator is not overloaded by unbalanced load.
	Short circuit in load.	Remove load. Check appliances and motors for point of short circuit.
	Defective voltage regulator or rotating rectifiers.	Consult KATOLIGHT CORPORATION Sales and Service Office —Mankato MN if voltage regulator is defective. Test rotating rectifiers.
High Voltage	Engine speed too high.	Decrease engine speed until alternator produces a 60 cycle output.
	Voltage adjust rheostat not set correctly.	Adjust to proper voltage.
	Defective voltage regulator.	Contact KATOLIGHT CORPORATION Sales and Service Office—Mankato MN.
Poor Voltage Regulation	Load in excess of alternator rating	Reduce load. Check nameplate rating.
	Wrong alternator speed or defective regulator.	Correct speed. Replace Regulator.
Continuous Voltage fluctuation	Engine speed not constant	Engine may not have enough power or engine governor may be worn or improperly adjusted. Set or repair defective governor.
	Defective Regulator.	Replace Regulator.
Vibration & Noise	Defective bearings	Replace bearings
	Gearbox dry or overfilled.	Check gearbox oil level.
	Power take-off misalignment excessive or universal joint dry or worn.	Correct defects. Refer to Operation section of this manual for alignment procedures.
	Loose mounting bolts	Check or tighten as necessary

PARTS ORDERING INSTRUCTIONS

To avoid errors or delay in filling your parts order:

1. Always give SERIAL NUMBER, and MODEL NUMBER.
2. Give the item part number and description. Give the quantity required of each item. DO NOT ORDER BY REFERENCE NUMBER OR GROUP NUMBER. If an old part cannot be identified return the part POSTAGE PREPAID to your distributor or KATOLIGHT CORPORATION. Write a letter to the same address stating the reason for returning the part.

Five Year P.T.O. Driven Alternator Limited Warranty

KATOLIGHT warrants to the original purchaser that the product delivered herewith, so far as it has been manufactured, engineered or assembled by KATOLIGHT, is free from defects in material and workmanship, and will perform under normal standby use and service for a period of five years from date of shipment from KATOLIGHT.

KATOLIGHT liability under the warranty specified herein shall be limited to the replacement or repair of the product, at the option of KATOLIGHT, or its authorized service station. This warranty does not apply to accessories supplied, but not manufactured by KATOLIGHT, which in such cases, the original equipment manufacturer's warranty will be applicable. This warranty does not obligate KATOLIGHT to bear the cost of labor or transportation charges in connection with the repair or replacement of defective products, nor shall it apply to a product upon which modifications, repairs or alterations have been made. This warranty shall apply only when the equipment or product has been properly installed, serviced and operated under normal standby conditions, in accordance with the instructions provided for the specific units.

KATOLIGHT shall not be liable for any claim greater in amount than the purchase price of the product, in respect of which such claim is made, and in no event shall KATOLIGHT be liable for any special, indirect or consequential damages.

THERE ARE NO EXPRESS WARRANTIES OTHER THAN THOSE DESCRIBED HEREIN. NO WARRANTIES SHALL BE IMPLIED OR OTHERWISE CREATED UNDER THE UNIFORM COMMERCIAL CODE, INCLUDING, BUT NOT LIMITED TO, A WARRANTY OF MERCHANTABILITY, AND A WARRANTY OF FITNESS FOR A PARTICULAR PURPOSE.

Form AVRM3-286

LEROY SOMER®

25 kW PTO

Réf. 1383 - 4.33 / g - 4.97

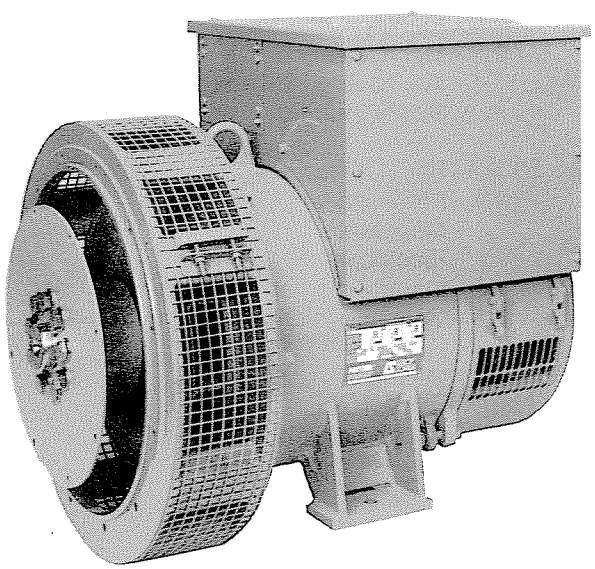

Cette notice doit être transmise à l'utilisateur final

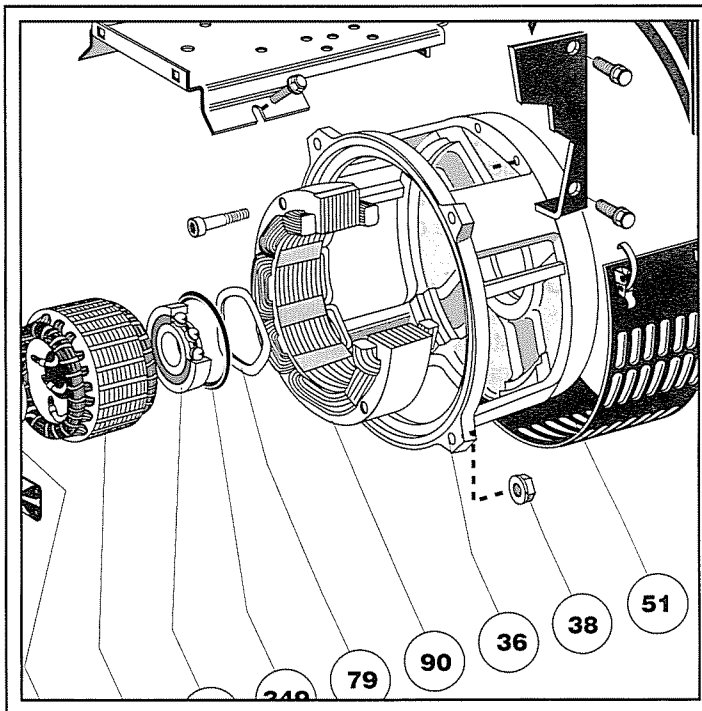

ALTERNATEURS - ALTERNATORS

LSA; LSA M; LSA C; LSA T 41.1/ 41.2/ 42.1/ 44.1

A R E P - 4 Pôles - R 438 LS

Installation et/and maintenance

Alternateur
LSA 41.1, 41.2, 42.1, 44.1 - 4P

Alternator
LSA 41.1, 41.2, 42.1, 44.1 - 4P

SOMMAIRE

1 - GENERALITES 3
- 1.1 - Spécifications
- 1.2 - Principe de fonctionnement

2 - INSTALLATION 4
- 2.1 - Emplacement
- 2.2 - Vérifications électriques
- 2.3 - Vérifications mécaniques
  - Bipaliers (poulies / courroies)
  - Monopalier

3 - MISE EN SERVICE 6
- 3.1 - Vérifications préliminaires
  - Mécaniques
  - Electriques
- 3.2 - Schéma des connexions internes
- 3.3 - Schéma de connexions des bornes

4 - ENTRETIEN 10
- 4.1 - Circuit de ventilation
- 4.2 - Roulements
- 4.3 - Bruits anormaux
- 4.4 - Pièces de première maintenance

5 - SERVICE ET DEPANNAGE.....11
- 5.1 - Vérifications préliminaires
- 5.2 - Défauts ayant une manifestation physique extérieure
- 5.3 - Défauts de tension
- 5.4 - Vérification d'une diode tournante
- 5.5 - Amorçage par excitation séparée
- 5.6 - Valeurs moyennes
- 5.7 - Régulateur de tension
- 5.8 - Réglage du régulateur

6 - DEMONTAGE -REMONTAGE 24
- 6.1 - Accès aux connexions et aux système de régulation
- 6.2 - Accès aux diodes
- 6.3 - Remplacement des diodes (LSA 41.1, LSA 41.2)
- 6.4 - Remplacement des diodes (LSA 42.1), (LSA 44.1)
- 6.5 - Remplacement du roulement AR
- 6.6 - Remplacement des roulements sur machine bipalier

7 - NOMENCLATURE 26

INDEX

1 - GENERAL 3
- 1.1 - Specification
- 1.2 - Principles of operation

2 - INSTALLATION 4
- 2.1 - Location
- 2.2 - Electrical checks
- 2.3 - Mechanical checks
  - Two bearing (Belt and pulley drive)
  - Single bearing

3 - STARTING UP 6
- 3.1 - Preliminary checks
  - Mechanical
  - Electrical
- 3.2 - Internal connection diagramm
- 3.3 - Connection of output terminals

4 - MAINTENANCE 10
- 4.1 - Cooling circuit
- 4.2 - Bearings
- 4.3 - Abnormal noises
- 4.4 - Recommended spare parts

5 - SERVICE AND FAULT FINDING.....11
- 5.1 - Preliminary checks
- 5.2 - Apparent physical defects
- 5.3 - Voltage faults
- 5.4 - Checking the rotating diodes
- 5.5 - Voltage build-up with separate excitation
- 5.6 - Normal average values
- 5.7 - A.V.R.
- 5.8 - A.V.R. adjustment

6 - DISMANTLING & REASSEMBLY.....24
- 6.1 - Access to connection and regulation system
- 6.2 - Diodes access
- 6.3 - Replacement of diodes (LSA 41.1, LSA 41.2)
- 6.4 - Replacement of diodes (LSA 42.1), (LSA 44.1)
- 6.5 - N.D.E. bearing replacing
- 6.6 - Replacing of two bearing

7 - PART LIST 26

ATTENTION : La roue polaire des alternateurs monopaliers n'étant pas arrêtée en translation dans le stator, il est impératif de ne jamais incliner ces machines vers l'avant lors de leur manutention.

WARNING : For single bearing machines the rotor is not locked and it is therefore whilst handling, the alternator must be kept horizontal at all time.

Alternateur
LSA 41.1, 41.2, 42.1, 44.1 - 4P

Alternator
LSA 41.1, 41.2, 42.1, 44.1 - 4P

1 - GENERALITES

1.1 - Spécifications

Alternateurs auto excités par bobinages auxiliaires à caractéristiques "compound" sans bague, ni balais avec régulateur automatique de tension.
Ils sont conformes à la plupart des normes internationales et en particulier aux suivantes :

- C.E.I : recommandations de la Commission Electrotechnique Internationale (34-1)
- U.T.E : normes françaises de l'Union technique de l'Electricité (NFC 51-111, 105, 110 ...)
- V.D.E : normes Allemandes Verein Deutscher Elektrische Ingenieure (0530)
- B.S.S : normes britanniques British Standard Specification (4999, 5000)
- NEMA : MG 21 norme américaine

Caractéristiques mécaniques (machine standard)
- Carcasse en acier
- Flasques en fonte
- Roulements à billes étanches (graissés à vie)
- Forme de construction standard :

B 34 (bipalier à pattes et bride de fixation à trous taraudés) Bout d'arbre cylindrique normalisé.
MD 35 (monopalier à disque et bride d'accouplement)
- Machine ouverte, autoventilée
- Degré de protection : IP 21 (IP 23 sur demande)

(Alternateur en rotation)

Conditions normales de fonctionnement (machine standard)
- Altitude inférieure à 1000 m
- Température ambiante inférieure à 40° C
- Facteur de puissance compris entre 0,8 AR et 1

Limite de fonctionnement dangereux
- Survitesse : 25 % pour 60 Hz (2250 min^{-1})
- Marche à plus de 110 % de la tension nominale
- Surcharges (voir tableau de puissances)

Caractéristiques
- Isolation classe H
- Capacité de surcharge : les alternateurs sont capables de faire démarrer des moteurs electriques dont le courant de démarrage est de l'ordre de 3 fois le courant nominal de l'alternateur .
- Régulation de tension : de l'ordre de ± 1% en régime établi à la vitesse nominale sur charge triphasée non déformante équilibrée; sur charge monophasée ou déséquilibrée la régulation de tension peut atteindre ± 5%.
- Amorçage automatique sur la tension rémanente.

1.1.1 - Désignation

1 - GENERAL

1.1 - Specification

Brushless alternators self excited by auxiliary windings acting as a booster, self regulated by an automatic voltage regulator.
They comply with the following international standards:

- I.E.C : recommendations of the Intertnational Electrotechnical Commission (34-1)
- U.T.E : French standards of the Union Technique de l' électricité (NFC 51-111 - 105 - 110 ..)
- V.D.E : German standards Verein Deutscher Elektrische Ingenieure (0530)
- B.S.S : British Standard Specification (4999, 5000)
- NEMA : MG 21 american standard

Mechanical features (standard machine)
- Steel frame
- Cast iron end shields
- Sealed for life ball bearings
- Standard construction features :

Shape B34 (foot and flange mounted) cylindrical normalized shaft end
MD 35 (Single bearing, flange and disc coupling)
- Machine screen protected / self ventilated
- Mechanical protection : IP 21 (IP 23 optional)

Normal operating conditions (Standard machine)
- Altitude : less than 1000 m (3300 ft)
- Ambient temperature : less than 40° C
- Power factor : from 0,8 lagging up to unity.

Limits for safe operation
- Overspeed : 25% for 60 Hz (2250 RPM)
- Working at up 110% of rated voltage
- Overloads : (see power table and curves)

Electrical features
- Insulation class H
- Overload capacity : the alternator is able to start electric motors, the starting current of which is about 3 times the rated current of the alternator.
- Steady state voltage regulation in the order of ± 1% at rated speed when supplying non distorting three phase balanced loads. With single phase (or unbalanced) loads voltage regulation is about ± 5%.
- Voltage build up based on residual magnetism.

1.1.1 - Designation

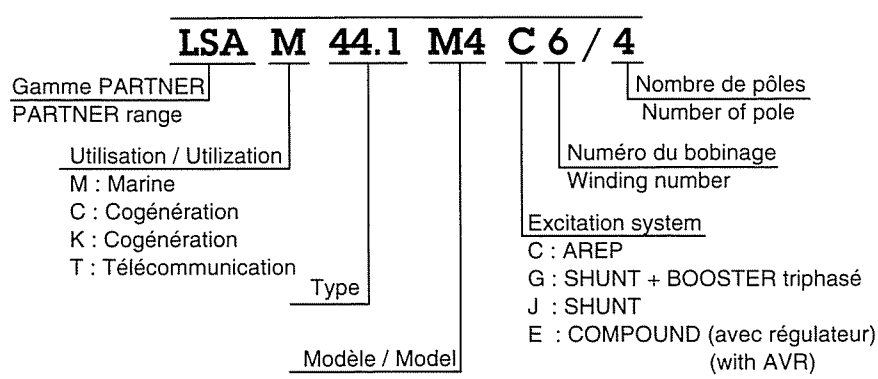

1.2 - Principe de fonctionnement

Le régulateur de tension est alimenté par 2 bobinages auxiliaires, l'un des bobinages (5A) a une caractéristique shunt(tension proportionnelle à la tension alternateur), l'autre (5B) une caractéristique série (tension proportionnelle au courant du stator).
Lors du démarrage, grâce au rémanent de l'excitatrice, il se crée un courant dans l'induit de l'excitatrice (1). Ce courant, redressé par les diodes tournantes (2) alimente la roue polaire (3). Celle-ci induit une tension dans le bobinage stator de l'alternateur (4) (tension de sortie) ainsi que dans le bobinage auxiliaire (5A).
La tension induite dans le bobinage auxiliaire alimente à travers le régulateur (6) l'inducteur de l'excitatrice (7).
Le régulateur de tension (6) contrôle le courant d'excitation de l'excitatrice en fonction de la tension de sortie de l'alternateur. En charge, surcharge ou court circuit le bobinage auxiliaire (5B) fournit un surcroit d'excitation (effet booster).

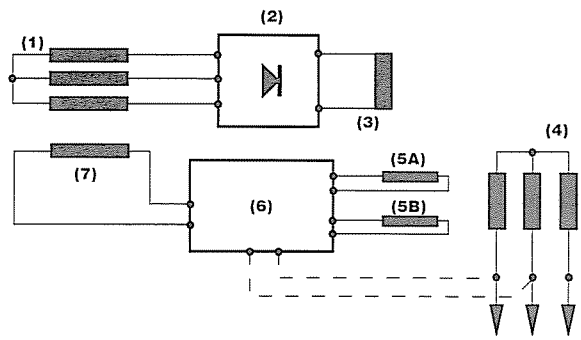

1.2 - Principle of operation

The AVR is fed by 2 auxiliary windings located in the stator. One of the windings (5A) with shunt characteristic (delivering a voltage proportional to the generator's output voltage) and the second one (5B) with a series characteristic (delivering a voltage proportional to the generator's output current).
When starting the residual magnetism creates a current in the exciter armature(1). This current is rectified by the rotating diodes (2) and feeds the main field (3).
The induced voltage in the auxiliary winding (5A) is then used to increase the excitation power via the AVR (6) to the exciter field (7) to ensure a rapid and smooth build up of output voltage in the main stator winding (4).
The voltage sensing for the AVR is taken from the output leads (phase V-W). On load, overload or short circuit the auxiliary winding (5B) supplies an additional excitation voltage (boosting effect).

2 - INSTALLATION

A la réception de votre alternateur, verifier l'état de la machine. S'il y a des dégats apparents , contacter le transporteur.

2.1 - Emplacement - Ventilation

Le local dans lequel est placé l'alternateur doit être tel que la température ambiante ne puisse dépasser 40°C pour les puissances standard (pour des températures > 40°C, appliquer un coéfficient de déclassement). L'air frais exempt d'humidité et de poussière, doit parvenir librement aux grilles d'entrée d'air situées côté opposé à l'accouplement. Il est nécessaire d'empêcher autant que possible le recyclage de l'air chaud sortant côté accouplement, ou de l'air chaud provenant du moteur thermique, ainsi que des gaz d'échappement.
Avant l'installation
Veiller à retirer les papiers de protection disposés lors de la peinture de la machine dans les ouvertures.

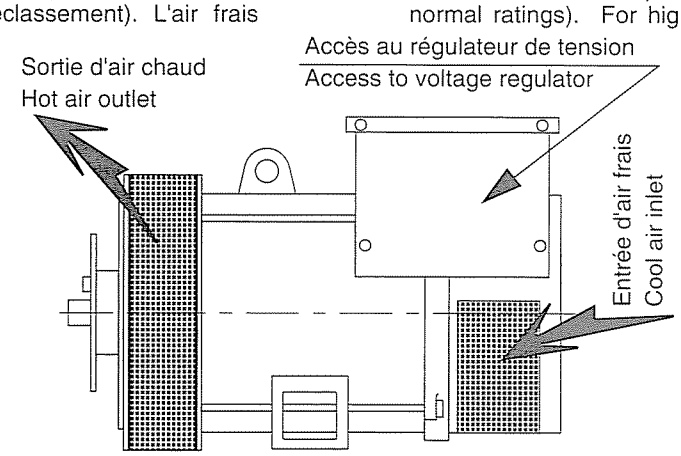

2 - INSTALLATION

Unpack the alternator, check for any damage to the crate pallet or plywood shipping container. If any damage is visible, it is possible the alternator itself has been damaged. This damage should be reported to the shipping carrier.

2.1 - Location - Ventilation

The room in which the alternator is installed shall be such that the ambient temperature never exceeds 40°C (at normal ratings). For higher ambients a derating factor should be applied.
Fresh air, free of humidity and dust, must circulate easily through the screen at the non drive end of the alternator. The recycling of heated air, from the D.E. or circulating from the prime mover, should be avoided as far as possible. Ensure adequate ventilation for a good air flow at all times.
Precautions to be taken before installation
Make sure air inlet and outlet openings are clear.

2.2 - Vérifications électriques

Avant la mise en fonctionnement, il est recommandé de vérifier l'isolement de la machine entre phase et masse et entre phases. Le régulateur doit être debranché pour cette opération. Celle ci s'effectue à l'aide d'un mégohmètre (500 volts continu). L'isolement doit être normalement > **10 mégohms** à froid.

ATTENTION . Il est formellement proscrit de mettre en service un alternateur neuf ou non, si l'isolement est inférieur à 1 mégohm pour le stator et 100 000 ohms pour les autres bobinages.
On peut trouver des valeurs inférieures en cas de stockage ou d'arrêt prolongé, si la machine est utilisée dans une zone

2.2 - Electrical checks

Before putting the machine into service, an insulation check between phase and earth and between phase is recommended. For this operation the A.V.R. must be deconnected. This one is carried out by means of a "megger" 500 V.d.c. Insulation should be > **10 meghoms**.

CAUTION : No machine whether new or used should be operated if insulation is less than 1 meghom for stator and 100 000 ohms for other windings.

If lower, the machine must be dried until the minimum value is obtained.

LEROY SOMER
Katolight Service - Master Repair Manual - Page 240

à forte hygrométrie (bord de mer, régions tropicales) ou bien soumise à des projections d'eau, d'embruns etc...
Pour retrouver les valeurs minimales ci dessus, plusieurs méthodes sont possibles.
a) Déshydrater la machine pendant 24 heures dans une étuve à une température d'environ 110 °C
b) Insuffler de l'air chaud dans l'entrée d'air en assurant la rotation de la machine inducteur déconnecté
c) Fonctionner en court-circuit (déconnecter le régulateur de tension)
- court-circuiter les trois bornes de sortie (puissance) par des connexions capables de supporter le courant nominal (ne pas dépasser si possible 6 A/mm2)
- installer une pince ampèremétrique pour contrôler le courant passant dans les connexions du court-circuit.
- brancher aux bornes des inducteurs de l'excitatrice, en respectant les polarités, une batterie de 48 Volts, avec en serie, un rhéostat d'environ 10 ohms (50 Watts).
- ouvrir au maximum tous les orifices de l'alternateur : boite à bornes, grilles de protection, etc.
- mettre en rotation l'alternateur à sa vitesse nominale et régler son excitation au moyen du rhéostat de manière à obtenir l'intensité nominale dans les connexions du court-circuit.
Nota : Arrêt prolongé
Pour éviter les difficultés exposées ci-dessus, l'utilisation de résistances de réchauffage ainsi qu'une rotation d'entretien périodique sont recommandées. (Les résistances de réchauffage ne sont réellement efficaces que si elles sont en fonctionnement permanent pendant l'arrêt de la machine.)

To get to the minimum value, there are several methods:
a) Bake the machine for 24 hours in an oven at about 110°C
b)Dry out the machine with a stream of hot air.
c) Disconnect the voltage regulator
- short-circuit the three output (power) terminals through connections capable of carrying the rated current (if possible do not exceed 6 A/mm2)
- with an appropriate ammeter, monitor the current flowing in the short circuited connections.
- connect a 48 volt storage battery to the field winding terminals of the exciter (respecting polarities), fitted in series with a rheostat of about 10 ohms (250 Watts).
- open completely all the apertures of the alternator : terminal box panels, protection screens etc .....
- start up the machine at its rated speed and adjust its excitation through the rheostat in order to obtain the rated current in the short-circuited connections.

Note : lengthy down-times
In order to avoid such troubles, it is recommended to fit anti condensation heaters or to run the machine periodically. (During the long down time, the anti condensation heaters must operate full time.)

2.3 - Vérifications mécaniques

2.3.1 - Sens de rotation

L'alternateur fonctionne correctement dans les 2 sens de rotation.
Le sens de rotation standard est le sens horaire vu coté bout d'arbre (rotation des phases 1 - 2 - 3). Pour un sens de rotation anti-horaire, la rotation des phases 1 - 2 - 3 s'obtient en permutant 2 et 3.

2.3.2 - Alternateur bipalier

- Accouplement semi-élastique
Il est recommandé de réaliser un alignement soigné des machines en vérifiant que les écarts de concentricité et de parallélisme des 2 demi-manchons n'excèdent pas 0,1 mm.
ATTENTION :
Cet alternateur a été équilibré avec 1/2 clavette.
- Entraînement par poulies courroies
Vérifier avec soin le parallélisme des arbres et l'alignement des poulies. La tension des courroies ne doit pas être éxagérée afin de ménager les roulements de l'alternateur.
La charge radiale maximale admissible au milieu du bout d'arbre indiquée dans le tableau est celle qui correspond à une durée de vie calculée "L10" de 20000 H à 1800 min^{-1}.

2.3 - Mechanical checks

2.3.1 - Direction of rotation

The alternator can be driven in either direction of rotation but standard phase rotation is 1 - 2 - 3 , when rotation is clockwise viewed on the drive end.
For anti-clockwise rotation transpose phase 2 and 3.

2.3.2 - Two bearing alternator

- Semi-flexible coupling
Careful alignment of the machines by measuring the concentricity and parallelism of the two parts of the coupling is recommended. The difference between the readings shall not exceed the specified values (say 0.1 mm).
WARNING :
This generator has been balanced with an half key .
- Belt and pulley drive
Carefully check for both correct shaft parallelism and pulley alignment. The tension of the belt should not be so high as to cause strain-on the alternators bearings.
Maximum radial load allowable on the middle of standard shaft extension for a bearing service life L 10 of 20 000 hours at 1800 min^{-1} is as follow .

Type	Roulements - Bearings (*)		Charge radiale max
	Avant / D.E.	Arrière / N.D.E.	Max radial pull
LSA 41.1	6309 . 2RS/C3	6308 . 2 RS/C3	350 da.N (780 lbs)
LSA 41.2	6310 . 2RS/C3	6308 . 2 RS/C3	350 da.N (780 lbs)
LSA 42.1	6310 . 2RS/C3	6308 . 2 RS/C3	350 da.N (780 lbs)
LSA 44.1	6313 . 2RS/C3	6310 . 2 RS/C3	520 da.N (780 lbs)
LSA 44.1L7L	6314 . 2RS/C3	6310 . 2 RS/C3	520 da.N (780 lbs)
LSA 44.1L8L	6314 . 2RS/C3	6310 . 2 RS/C3	520 da.N (780 lbs)

(*) Tous les roulements sont lubrifiés avec une graisse haute température.

(*) All bearings are lubricated with a hight temperature grease.

Nota : Dans des cas spéciaux d'accouplement par poulies-courroies (ou les données ne seraient pas celles indiquées ci-dessus) , veuillez consulter le bureau d'études (Usine de Sillac).

2.3.3 - Alternateur monopalier

Avant d'accoupler les deux machines, vérifier leur compatibilité par :
- une analyse torsionnelle de la ligne d'arbre
- un contrôle des dimensions du volant et carter de volant, de la bride, des disques et déport de l'alternateur. Après accouplement vérifier l'existence du jeu latéral du vilbrequin.

3 - MISE EN SERVICE

3.1 - Vérifications préliminaires

3.1.1 - Vérifications mécaniques

Avant le premier démarrage, vérifier que :
- les boulons de fixation des pattes et de la bride sont bien bloqués,
- l'air de refroidissement est bien aspiré et refoulé par les ouies de la machine sans obstacle,
- les grilles et carter de protection sont bien en place,
- pour les alternateurs monopaliers, le couple de serrage des disques d'accouplement est de :
  - 3,8 m.daN = LSA 41.1
  - 10,4 m.daN = LSA 41.2, 42.1,44.1.

3.1.2 - Vérifications électriques

Vérifier que :
- un dispositif de coupure différentielle, conforme à la législation sur la protection des personnes en vigueur dans le pays d'utilisation, a bien été installé sur la sortie de puissance de l'alternateur au plus près de celui-ci.

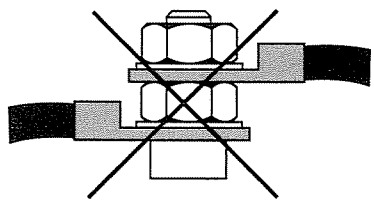

- le raccordement de la machine au réseau a bien été réalisé cosse sur cosse et que les écrous des bornes sont bien bloqués,
- le raccordement des câbles et barrettes éventuelles est conforme au schéma joint à la machine,
- les protections éventuelles ne sont pas déclenchées,
- dans le cas d'un régulateur extérieur,les connexions entre l'alternateur et l'armoire sont bien éffectuées selon le schéma de branchement,
- il n'y a pas de court-circuit entre phase ou phase-neutre entre les bornes de sortie de l'alternateur et l'armoire de contrôle du groupe électrogène (partie du circuit non protégée par les disjoncteurs ou relais de l'armoire).

3.1.3 - Vérifications électriques du régulateur
- Vérifier que toutes les connexions sont bien réalisées selon le schéma de branchement joint.
- Vérifier que le strap de selection de fréquence "ST3" est sur la bonne valeur de fréquence.
- Vérifier si le strap ST4 ou le potentiomêtre extérieur sont raccordés.
- Fonctionnements optionnels
• Strap ST1 : coupé pour raccordement du module de détection triphasé R 730.
• Strap ST2 : coupé pour temps de réponse rapide.
• Strap ST5 : coupé pour supprimer la fonction LAM.

Note : In certain cases of special belt coupling (where the data would not be those mentioned above), please consult our Sillac plant.

2.3.3 - Single bearing alternator

Before coupling the two machines, make sure of their compatibility by :
- torsional analysis
- check all dimensions of flywheel and flywheel housing and flange, discs and spacing.
After coupling, check lateral play of crankshaft.

3 - STARTING UP

3.1 - Preliminary checks

3.1.1 - Mechanical checks

Before starting up
- that all foot and flange bolts are tightened
- that the cooling air circulates freely around and through the machine,
- check that all louvres, guards, etc .... are correctly fitted
- for single bearing alternators the discs are fastened to the coupling hub with bolts torqued at :
  - 3,8 m.daN = LSA 41.1
  - 10,4 m.daN = LSA 41.2, 42.1, 44.1.

3.1.2 - Electrical checks

Check that :

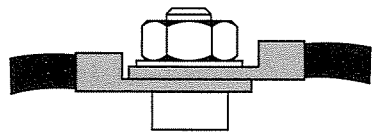

- a suitable electrical protection device is fitted in the output circuit for safety reasons (in line with the codes of practice in force within the country where the alternator is installed)
- the machine-to-power supply interconnection is made according to the drawing (terminal lugs adjacent to each other). Ensure before start up that terminal nuts are properly tightened.
- the terminal links correspond to the voltage required
- the control panel protection equipment is correctly set
- for separately fitted regulator, that the connections between alternator and panel correspond to wiring diagram,
- that there is no short-circvuit due to fautly connections either LL. or L.N between the terminals of the alternator and the power switch or breaker (this part of the circuit is not protected by the breaker)

3.1.3 - AVR electrical checks

Ensure all connections are according to attached diagrams
- Check frequency selection jumper "ST3".
- Check if jumper ST4 or remote potentiometer are connected.
- Optional operating modes selection:
• Link ST1 : cut for connection of 3 phase sensing module R730.
• Link ST2 : cut for fast voltage recovery.
• Link ST5 : cut to eliminate LAM action.

3.2 - Schéma des connexions internes

3.2 - Internal connection diagram

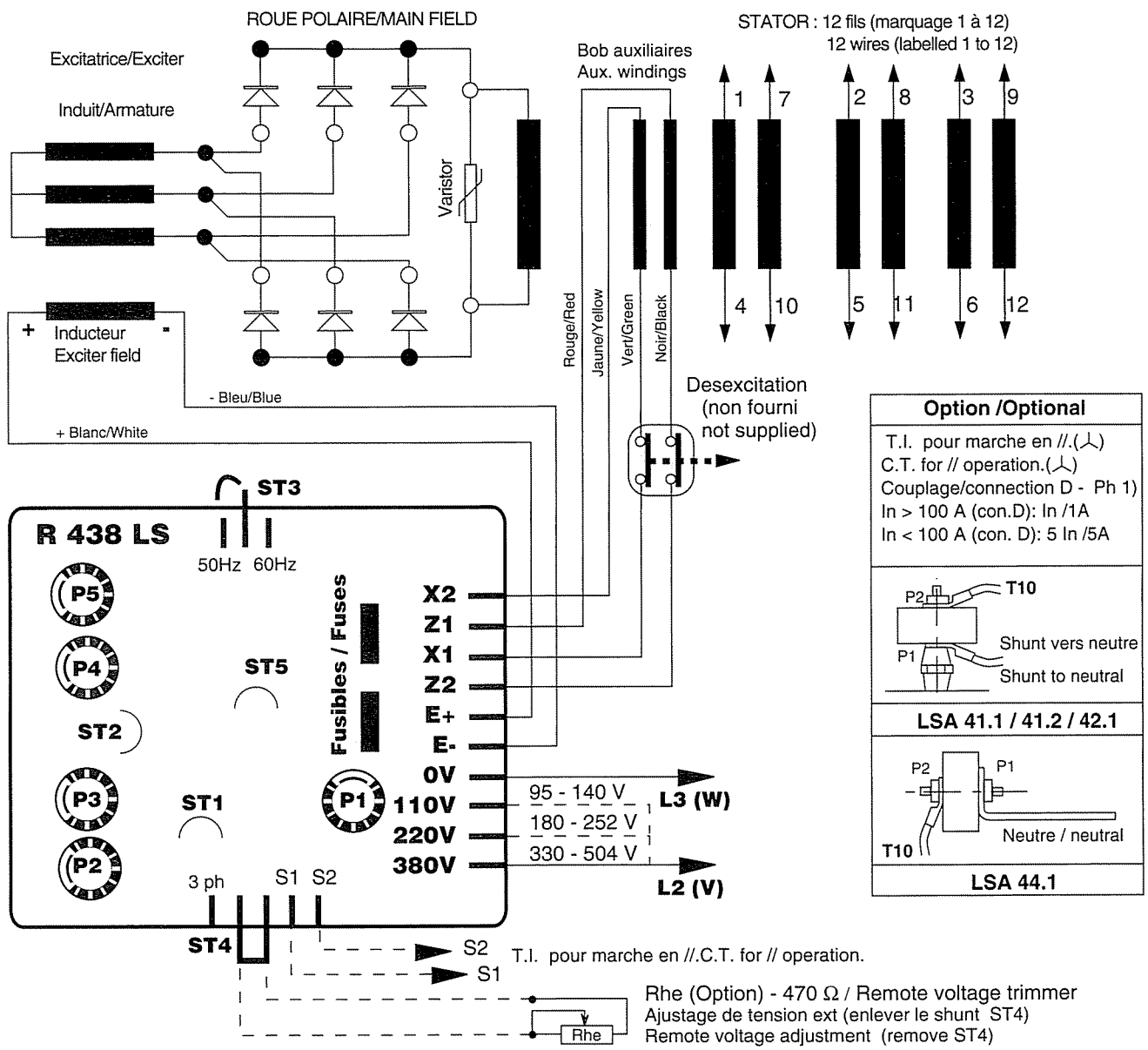

P1 : Statisme - Quadrature voltage droop
P2 : Tension - Voltage
P3 : Stabilité - Stability
P4 : Seuil de sous-vitesse - Frequency threshold + LAM
P5 : Plafond d'excitation / Excitation current ceiling
ST1 : Détection standard monophasée - Single phase voltage sensing ⌒
ST2 : Temps de réponse - Recovery time: normal ⌒ Rapide -Fast ⌒⌒
ST3 : Fréquence - Frequency selection
ST4 : Potentiomètre extérieur - Remote trimmer
ST5 : Avec / with LAM ⌒ sans / without LAM ⌒⌒
Fusibles / Fuses : 250 V . 6,3 A (rapide / fast)
Option / Optional : Détection triphasée - 3 phase sensing : **ST1** ⌒⌒
(avec module additionnel R 730 - with additional module R 730)

SCHEMA DES CONNEXIONS ET BRANCHEMENT DU REGULATEUR
WIRING AND A.V.R. CONNECTION DIAGRAM

Extrait du schema / Extracted from
N°: 2265.11.92(A)

3.3 - Schéma de connexions des bornes — 3.3 - Output terminals connections

Code connexions/Connection code : A

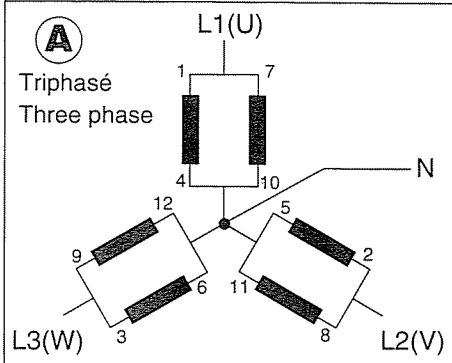

Voltage / Tension L.L

Bobinage Winding	50 Hz	60 Hz
1 ou/or **6**	190 - 208	208 - 240
2 ou/or **7**	220 - 230	-
3 ou/or **8**	-	208

Bornes régulateur : 0. 220V (L2-L3)
AVR terminals

Couplage usine / Factory connection

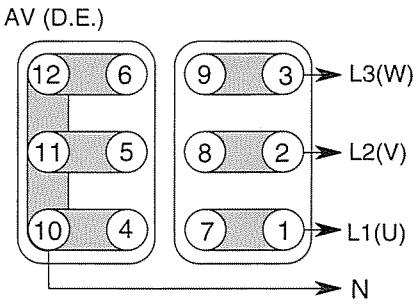

Code connexions/Connection code : D

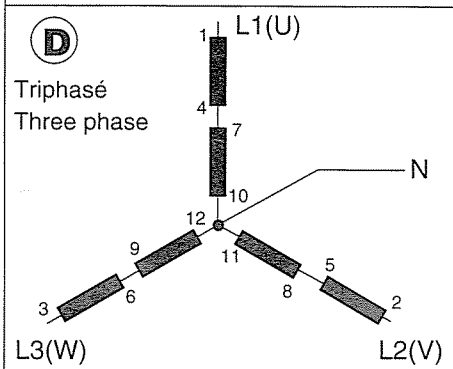

Voltage / Tension L.L

Bobinage Winding	50 Hz	60 Hz
1 ou/or **6**	380 - 415	416 - 480
2 ou/or **7**	440 - 460	-
3 ou/or **8**	347	380 - 416

Bornes régulateur : 0. 380V (L2-L3)
AVR terminals

Couplage usine / Factory connection

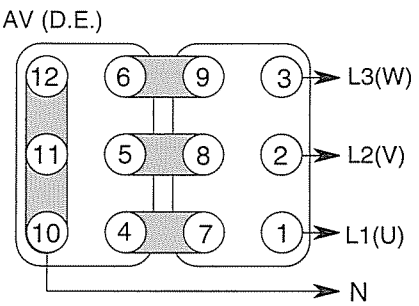

Code connexions/Connection code : FF

Monophasé / Single phase
Connexion recommandée
Advisable connection

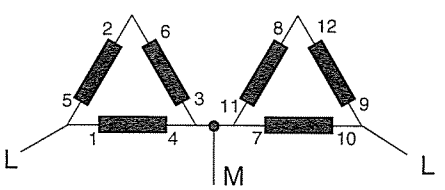

Tension LM = 1/2 tension LL
Voltage LM = 1/2 voltage LL

Voltage / Tension L.L

Bobinage Winding	50 Hz	60 Hz
1 ou/or **6**	220 - 240	240
2 ou/or **7**	240 - 260	-
3 ou/or **8**	200	220 - 240

Bornes régulateur : 0. 220V (L-L)
AVR terminals

Couplage usine / Factory connection

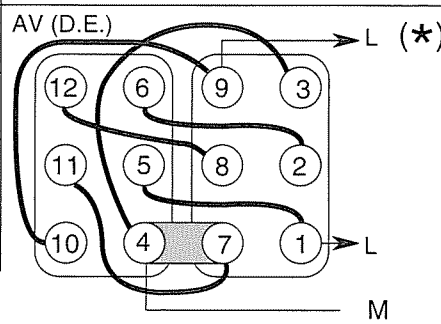

Code connexions/Connection code : B

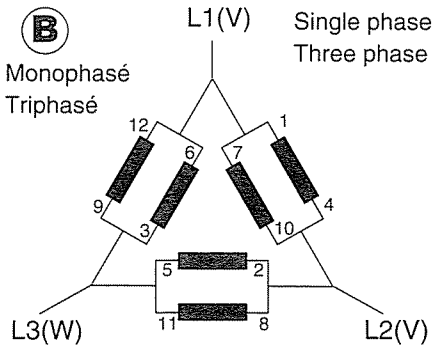

Voltage / Tension L.L

Bobinage Winding	50 Hz	60 Hz
1 ou/or **6**	110 - 120	120
2 ou/or **7**	120 - 130	-
3 ou/or **8**	-	110 - 120

Bornes régulateur : 0. 110V (L2-L3) AVR terminals

Pour ce couplage s'assurer auprès de l'usine que le Ø des bornes est compatible avec l'intensité de sortie.
For this connection check with the factory that terminal can accept output current.

Couplage usine / Factory connection

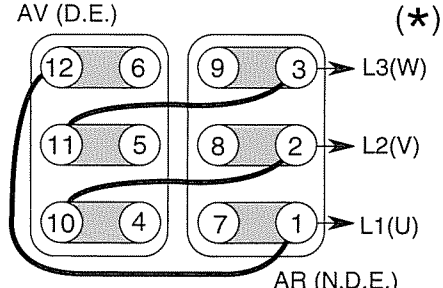

SCHEMA DES CONNEXIONS ET BRANCHEMENT DU REGULATEUR
WIRING AND A.V.R. CONNECTION DIAGRAM

Extrait du schema / Extracted from
N°: 2218.05.92(0)

Alternateur — Alternator

LSA 41.1, 41.2, 42.1, 44.1 - 4P

Code connexions/Connection code

Mono ou triphasé / Single or three phase

Connexion déconseillée en monophasé
Inadvisable connection for single phase

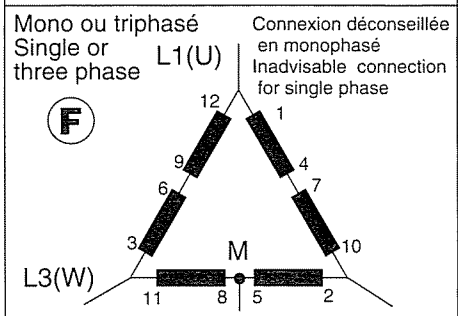

Tension LM = 1/2 tension LL
Voltage LM = 1/2 voltage LL

Voltage / Tension L.L

Bobinage Winding	50 Hz	60 Hz
1 ou/or **6**	220 - 240	240
2 ou/or **7**	240 - 260	-
3 ou/or **8**	200	220 - 240

Bornes régulateur : 0. 220V (L2-L3)
AVR terminals

Couplage usine / Factory connection

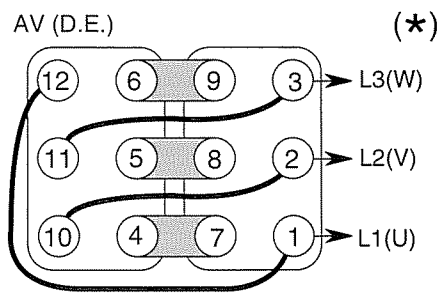

Code connexions/Connection code

G — Monophasé / Single phase
Connexion déconseillée
Inadvisable connection

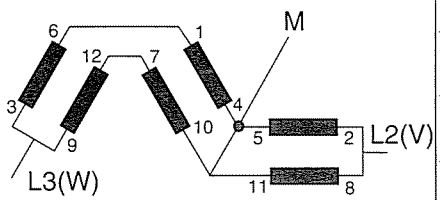

Tension LM = 1/2 tension LL
Voltage LM = 1/2 voltage LL

Voltage / Tension L.L

Bobinage Winding	50 Hz	60 Hz
1 ou/or **6**	220 - 240	240
2 ou/or **7**	230 - 260	-
3 ou/or **8**	200	220 - 240

Bornes régulateur : 0. 220V (L2-L3)
AVR terminals

Couplage usine / Factory connection

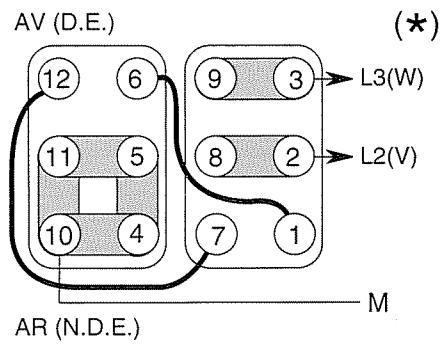

SCHEMA DES CONNEXIONS ET BRANCHEMENT DU REGULATEUR
WIRING AND A.V.R. CONNECTION DIAGRAM

Extrait du schema / Extracted from N°: 2218.05.92(0)

L'alternateur standard est livré avec 8 barrettes de couplage.
(*) L'usine peut fournir en option un jeu de shunts souples et une barrette de neutre pour réaliser les connexions.

Standard alternator is fitted with 8 coupling plates.
(*) As an option to make these connections, shunts and neutral coupling plate can be provided by factory.

4 - ENTRETIEN

4.1 - Circuit de ventilation

Il est recommandé de veiller à ce que la circulation d'air ne soit pas réduite par une obturation partielle des grilles d'aspiration et de refoulement : boue, fibre,suie, etc ....

4.2 - Roulements

Les roulements sont graissés à vie: durée de vie approximative de la graisse (selon utilisation) = 20 000 heures ou 3 ans. Surveiller l'élèvation de température des roulements qui ne doit pas dépasser 60°C au dessus de la température ambiante. Dans le cas d'un dépassement de cette valeur, il est nécessaire d'arrêter la machine et de procéder à une vérification.

4.3 - Bruits anormaux

- La naissance de bruits et de vibrations inhabituels peut provenir de la détérioration ou de l'usure des roulements. Il est préférable de procéder à leur remplacement, afin d'éviter le risque d'un blocage qui pourrait avoir de fâcheuses répercussions sur l'alternateur.
- Dans le cas d'alternateur monopalier le bruit peut également provenir d'un mauvais alignement.
- Les alternateurs monophasés ou les alternateurs triphasés fonctionnant en régime déséquilibré ainsi que les alternateurs triphasés couplés en zig zag, même sur charge équilibrée sont plus bruyants et ont davantage de vibrations que les machines triphasées en régime équilibré.

4 - MAINTENANCE

4.1 - Cooling circuit

It is recommanded to check that the cooling air circulation is not restricted.

4.2 - Bearings

The bearings are sealed for life
Approximate grease life : 20 000 hours or 3 years
Temperature rise of ball bearings :
Periodically check that the temperature of the bearings does not exceed 60°C above ambient temperature.
If higher, it is necessary to stop the machine and proceed to a general inspection.

4.3 - Abnormal noises

- The generation of abnormal noises and vibrations may result from wear and tear of the ball bearings. It is better to proceed to their replacement so as to avoid any risk of seizure which could seriously damage the alternator.
- In the case of single bearing machines, the abnormal noise may also be caused by misalignment.
- Both single phase alternators and three phase alternators supplying unbalanced loads are more noisy and have more vibrations than three phase machines with balanced loads. The same applies to three phase generator connected in dog - leg, even with 3 phase balanced loads.

4.4 - Pièces de première maintenance

4.4 - Recommended spare parts

Rep	Designation	**LSA 41.1**	Codification
60	Roulement côté bout d'arbre - .D.E bearing	6309 2RS/C3	RLT 045 TS030
70	Roulement côté excitatrice - N.D.E bearing	6308 2RS/C3	RLT 040 TS030
198	Régulateur de tension - Voltage regulator	R 438 LS	ESC 220 CU027
343	Croissant de diodes directes - Forward diodes assembly	LSA 41.9.07C	(1 jeu / 1 set)
344	Croissant de diodes inverses - Reverse diodes assembly	LSA 41.9.08C	ESC 025 MD000
347	Varistance - M.O varistor (surge suppressor : 250V)	LSA 41.1.22A (CI.1191)	CII 041 EQ022
	Fusible du régulateur - AVR fuse	250V - 8 A / FI 5 x 20	PEL 006 FG008

Rep	Designation	**LSA 41.2**	Codification
60	Roulement côté bout d'arbre - .D.E bearing	6310 2RS/C3	RLT 050 TS030
70	Roulement côté excitatrice - N.D.E bearing	6308 2RS/C3	RLT 040 TS030
198	Régulateur de tension - Voltage regulator	R 438 LS	ESC 220 CU027
343	Croissant de diodes directes - Forward diodes assembly	LSA 41.9.66C	(1 jeu / 1 set)
344	Croissant de diodes inverses - Reverse diodes assembly	LSA 41.9.65C	ESC 025 MD001
347	Varistance - M.O varistor (surge suppressor : 250V)	LSA 42.1.52A (CI.1193)	CII 042 EQ052
	Fusible du régulateur - AVR fuse	250V - 8 A / FI 5 x 20	PEL 006 FG008

Rep	Designation	**LSA 42.1**	Codification
60	Roulement côté bout d'arbre - .D.E bearing	6310 2RS/C3	RLT 050 TS030
70	Roulement côté excitatrice - N.D.E bearing	6308 2RS/C3	RLT 040 TS030
198	Régulateur de tension - Voltage regulator	R 438 LS	ESC 220 CU027
343	Croissant de diodes directes - Forward diodes assembly	LSA 42.9.10	ADE 042 EQ010
	Diode directe - Forward diode	I.699	ESC 070 DC004
344	Croissant de diodes inverses - Reverse diodes assembly	LSA 42.9.11	ADE 042 EQ011
	Diode indirecte - Reverse diode	I.698	ESC 070 DC005
347	Varistance - M.O varistor (surge suppressor : 250V)	LSA 42.1.52A (CI.1193)	CII 042 EQ052
	Fusible du régulateur - AVR fuse	250V - 8 A / FI 5 x 20	PEL 006 FG008

Rep	Designation	**LSA 44.1**	Codification
60	Roulement côté bout d'arbre - .D.E bearing	6313 2RS/C3	RLT 065 TS030
60	Roulement côté bout d'arbre - .D.E bearing (L7 L / L8 L)	6314 2RS/C3	RLT 070 TS030
70	Roulement côté excitatrice - N.D.E bearing	6310 2RS/C3	RLT 050 TS030
198	Régulateur de tension - Voltage regulator	R 438 LS	ESC 220 CU027
343	Croissant de diodes directes - Forward diodes assembly	LSA 44.9.11	ADE 044 EQ011
	Diode directe - Forward diode	I.699	ESC 070 DC004
344	Croissant de diodes inverses - Reverse diodes assembly	LSA 44.9.12	ADE 044 EQ012
	Diode indirecte - Reverse diode	I.698	ESC 070 DC005
347	Varistance - M.O varistor (surge suppressor : 250V)	LSA 42.1.52A (CI.1193)	CII 042 EQ052
	Fusible du régulateur - AVR fuse	250V - 8 A / FI 5 x 20	PEL 006 FG008

Caractéristiques des diodes / **Diodes spécifications**

Type	Diode directe Forward diode	Diode inverse Reverse diode	Amps (A)	VRRM (V)	IFSM 10ms (A)	VF / IF max. (V) (A)	IR /TJ VRRM (mA) (°C)	$I^2 T$ (A^2 S)
LSA 42.1/44.1	I.699	I.698	70	800	1000	1,35/70	9/180	5000

4.4.1 - Pièces de rechange

S'adresser à :

MOTEURS LEROY-SOMER
Usine de Sillac/Alternateurs
16015 ANGOULEME CEDEX - FRANCE
Tel : (33) 45.64.45.64 - Service : SAT 45.64.43.69
Fax : 45.64.43.24

4.4.1 - Spare parts supply

Address enquiries and orders to :

MOTEURS LEROY-SOMER
Usine de Sillac/Alternators
16015 ANGOULEME CEDEX - FRANCE
Tel : (33) 45.64.45.64 - Service : SAT 45.64.43.69
Fax : 45.64.43.24

Pour éviter toute erreur à la livraison des pièces détachées, veuiller rappeler les indications marquées sur la plaque signalétique, notamment le type et le numéro de la machine ainsi que le repère de la pièce dans la nomenclature.

5 - SERVICE ET DEPANNAGE

5.1 - Vérifications préliminaires :

Si, à la mise en service, le fonctionnement de l'alternateur se révèle anormal, il y aura lieu de vérifier tout d'abord.
- Le branchement des différents éléments suivant le schéma joint à la machine.
- La continuité des liaisons, vérifier la solidité et le bon contact à tous les raccordements.
- La vitesse du groupe (se fier plutôt à un fréquencemètre qu'à un compte tours)
- Vérifier que les protections soient bien enclenchées, etc.....

To avoid errors on delivery of spare parts, all information marked on nameplates shoul be supplied on parts orders, in particular model and serial number of the alternator. Also give the parts numbers from the parts list.

5 - SERVICE AND FAULT FINDING

5.1 - Preliminary checks

When running, if the alternator does not operate correctly, first check:
- That the connections correspond to diagram for the machine.
- That the connections are properly tightened.
- That the running speed of the set is correct (frequencymeter)
- That protection equipment is correctly set.

5.2 - Défauts ayant une manifestation physique extérieure (échauffement,vibrations,bruits)

5.2 - Evident physical defects (overheating, noise,vibrations .....)

	Défaut / Fault	Action	Origine du défaut & Origin of fault
A	Echauffement excessif du ou des paliers (temp > à 80°C sur les chapeaux de roulements avec ou sans bruit anormal)	Démonter les paliers	- Si le roulement a bleui ou si la graisse est carbonisée, changer le roulement. - Cage de roulement mal bloquée (tournant dans son emboîtement) - Mauvais alignement des paliers (flasques mal emboités)
	Excessive overheating of one or both bearings (temp of bearings over 80 °C)(With of without abnormal bearing noise)	*Disassemble bearings*	*- If the bearing has turned blue or if the grease has turned black , change the bearing.* *- Bearing race badly locked (moving in its housing)* *-Bracket misalignment.*
B	Echauffement excessif de la carcasse de l'alternateur(plus de 40° C au dessus de la température ambiante)	Contrôler - les entrées et sorties d'air de l'alternateur - les appareils de mesure (voltmètre, ampèremètre) - temp. ambiante	- Circuit d'air (entrée-sortie) partiellement obstrué ou recyclage de l'air chaud de l'alternateur ou du moteur thermique - Fonctionnement de l'alternateur à une tension trop élevée (> à 105% de Un en charge.) - Fonctionnement de l'alternateur en surchage
	Excessive overheating of alternator frame (temperature 100°F above ambient)	*Check* *-Air inlets and outlets of alternator* *-Measuring equipment (volmeter - ammeter)* *- Ambient temperature*	*- Air flow (Inlet - outlet) partially clogged or hot air is being recycled either from alternator or prime mover* *- Aternator is functionning at too high a voltage (over 105 % of rated voltage on load).* *- Alternator overloaded.*
C	Vibrations excessives	Vérifier l'accouplement et les fixations des machines	- Mauvais alignement (accouplement) - Amortissement défectueux ou jeu dans l'accouplement - Défaut d'équilibrage d'un des éléments de la ligne d'arbre
	Too much vibration	*Check the coupling and the machine mountings*	*Misalignment (coupling)* *- Defective mounting or play in coupling* *- Incorrect balancing of shaft (Engine - Alternator)*
D	Vibrations excessives plus bruit (grognement provenant de l'alternateur)	Arrêter immédiatement le groupe. Vérifier l'installation	- Marche en monophasé de l'alternateur (charge monophasée ou contacteur défectueux ou défaut de l'installation)
		Remettre en marche à vide si le grognement persiste	- Court-circuit dans le stator de l'alternateur
	Excessive vibration and humming noise coming from the alternator	*Stop the gen-set* *Check the installation*	*Three phase alternator is single phase loaded in excess of acceptable level.*
		Start up with no-load : *if humming persists ....*	*- Short-circuit in the alternator stator*

	Défaut / Fault	Action	Origine du défaut & Origin of fault
E	Choc violent, éventuellement suivi d'un grognement et de vibrations	Arrêter immédiatement le groupe electrogène.	- Court-circuit sur l'installation - Faux couplage (couplage en parallèle non en phase) Conséquences possibles (suivant l'importance du défaut) - Rupture ou détérioration de l'accouplement - Rupture ou torsion des bouts d'arbre. - Déplacement et mise en court-circuit du bobinage de la roue polaire. - Eclatement ou déblocage du ventilateur - Destruction des diodes tournantes, du régulateur.
	Alternator damaged by a significant impact which is followed by humming and vibration	*Stop the gen-set immediately*	*- Short-circuit in external circuit* *- Faulty parallel connection (out of phase)* *- Possible consequences (according to the seriousness of the above faults :* *- Break or deterioration in the coupling* *- Break or twist in shaft extension* *- Shifting or short-circuit of the main fieid winding* *- Bursting or unlocking of the fan.* *- Diode burnt, regulator, rectifier bridge damaged*
F	Fumée, étincelles ou flammes sortant de l'alternateur + grognements et vibrations	Arrêter immédiatement le groupe .	- Court-circuit sur l'installation (y compris entre alternateur et disjoncteur) - Objet tombé dans la machine - Court circuit ou flash au stator
	Smoke, sparks, or flames issuing from the alternator	*Stop the set immediately*	*- Short-circuit in external circuit (including wiring between alternator and control board).* *- Object fallen into the machine.* *- Short-circuit or flash in stator winding*

5.3 - Défauts de tension **5.3 - Voltage faults**

	Défaut Defect	Action	Mesure / Measure	Controle
G	Absence de tension à vide au démarrage	Brancher entre E- et E+ une pile neuve de 4 à 12 volts en respectant les polarités	L'alternateur s'amorce et sa tension reste normale après suppression de la pile	- Manque de rémanent - Vérifier la tension E- et E+ (env 6 V) - U > 10 V : défaut diode ou excitatrice
			L'alternateur s'amorce mais sa tension ne monte pas à la valeur nominale après suppression de la pile	- Vérifier le branchement de la référence tension au régulateur - Retoucher le potentiomètre (P2)tension du régulateur
			L'alternateur s'amorce mais sa tension disparaît après suppression de la pile	Défaut du régulateur
				Vérifier le branchement du régulateur (éventuellement régulateur défectueux) -Inducteurs coupés - Diodes tournantes claquées - Roue polaire coupée - Vérifier la résistance
	No voltage at no load or start up	*Connect a battery of 4 to 12 volts to terminals E+ or E- on the A.V.R.*	*The alternator builds up and voltage is correct after battery removal*	*- Lack of residual magnetism* *- Check voltage between E- and E+ of the A.V. R (correct value about 6 v)* *- Fault in rotating diodes* *- U > 10 V exciter faulty*
			The alternator builds up but voltage does not reach nominal value after battery removal	*- Check the connection of the sensing leads to the A.V. R* *- Readjust the potentiometer (P2) voltage*
			The alternator builds up but voltage collapses after battery removal	*- A. V. R failure*
				- Check the connection of the sensing leads to the A.V.R *- Exciter windings shorted or open circuit (check winding)* *- Rotating diodes burnt (check diodes)* *- Main field winding open circuit (check resistance)*

	Défaut Defect	Action	Mesure / Measure	Controle
H	Tension trop élevée	Réglage du potentiomètre tension du régulateur	Réglage inopérent, mesurer la tension entre E+ et E-	- Tension entre E+ et E- > 12 V Défaut du régulateur
	Voltage too high	*Adjust potentiometer voltage*	*No adjustment of voltage, measure voltage between E+ and E- on A.V.R.*	*Voltage between E+ and E- > 12 V* *A.V.R. faulty*
I	Oscillations de la tension	Réglage du potentiomètre stabilité (P2)	Si pas d'effet : essayer les modes normal rapide (ST2)	- Vérifier la vitesse : possibilité irrégularités cycliques - Bornes mal bloquées - Défaut du régulateur
				Vitesse trop basse en charge (ou LAM réglé trop haut) - 1 diode tournante ouverte - Coupure du bobinage auxiliaire du stator - Court-circuit de la roue polaire en charge - Induit défectueux en charge
	Voltage oscillation	*Set potentiometer (P2) Stability*	*If no result : change recovery mode normal / fast (ST2)*	*- Check speed for possible cyclic irregularity* *- Check out put connections* *- Faulty A.V.R.*
				- Speed below nominal on load (or LAM set too high) *- A rotating diode is open circuit* *- Auxiliary winding is open circuit (check resistance values)* *- Short circuit on main field (check resistance)* *- Exciter armature winding faulty (check resistance)*
J (1)	Tension bonne à vide et trop basse en charge	Mettre à vide et vérifier la tension entre E+ et E- sur le régulateur	Tension entre E+ et E- < 6 V	- Vérifier la vitesse (ou LAM réglé trop haut)
			Tension entre E+ et E- > 10 V	- Diodes tournantes défectueuses - Court-circuit dans la roue polaire. Vérifier la résistance - Induit de l'excitatrice défectueux
	Voltage correct on no-load, too low on load	*Run on no-load and check voltage between E+ and E-*	*Voltage between E- and E+ is < 6 V (d.c)*	*- Check speed (or LAM set too high)*
			Voltage between E- and E+ is > 10 V (d.c)	*- Fault in rotating diodes* *- Short circuit in main field , check resistance* *- Exciter armature field faulty (check values)*

(1) Attention : Dans le cas d'utilisation en monophasé, vérifier que les fils de détection venant du régulateur soient bien branchés aux bornes d'utilisation.

(1) Important : In the case of single phase operation, check that the sensing leads are correctly connected to the relevant output leads.

K (2)	Disparition de la tension pendant le fonctionnement	Vérifier le régulateur, la varistance, les diodes tournantes et changer l'élément défectueux	La tension ne revient pas à la valeur nominale	- Inducteurs excitatrice coupés - Roue polaire coupée ou en court-circuit - Induit excitatrice défectueux - Régulateur défaillant
	Voltage collapses during normal operation	*Check the regulator, the surge suppressor, the rotating diodes and replace any defective part*	*The output voltage does not return the nominal value .*	*- Exciter winding faulty (check values)* *- Main field faulty (check values)* *- Regulator faulty* *- Faulty exciter armature*

(2) Action possible de la protection interne (surcharge,coupure, court-circuit)

(2) May be due to AVR internal protection (overload, loss of sensing, short-circuit)

5.4 - Vérification d'une diode tournante

5.4 - Checking a rotating rectifier diode

LSA 41.1, LSA 41.2
Pont de diodes
Rectifiers bridge

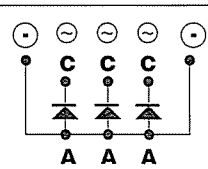

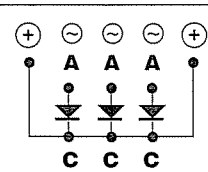

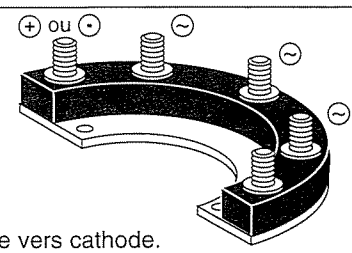

Anode 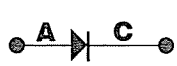 Cathode

Une diode en état de marche doit laisser passer le courant uniquement dans le sens anode vers cathode.
A diode in a good condition enables the current to flow in only one direction from anode to cathode.

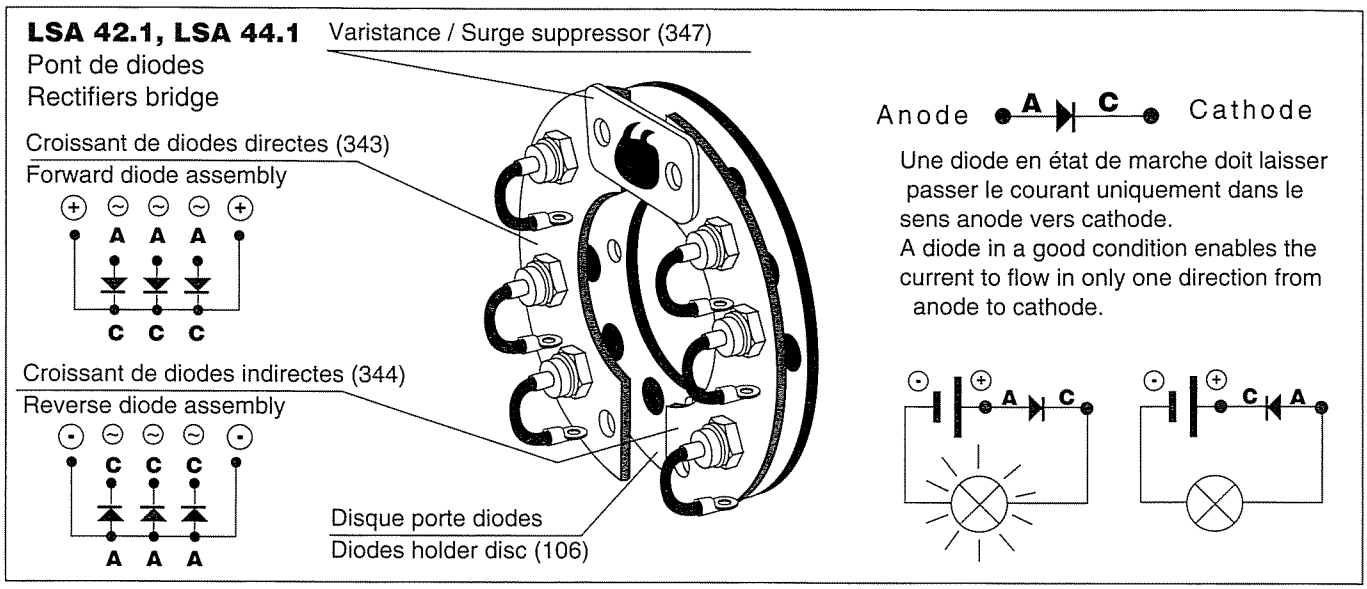

5.5 - Amorçage par excitation séparée

L'alternateur s'amorce seul grâce à l'aimantation rémanente du circuit magnétique de son excitatrice.Pour une première mise en service (en usine) ou après incident, il est nécessaire de réaimanter ce circuit magnétique.
Pour cela il faut brancher une batterie ou une pile de (4-12V) aux bornes de l'inducteur pendant 2 à 3 secondes.
Ne pas dépasser le courant d'excitation nominal. Cette opération s'effectue quand l'alternateur tourne à sa vitesse nominale.

5.5 - Voltage build-up by field flashing (at no load)

The alternator is self exciting from the residual magnetism of the magnetic circuit of the exciter.When first tested (at the factory) this magnetic circuit is magnetized but after a breakdown it may be necessary to remagnetize.
Proceed as follows.
Connect a 4 - 12 V battery to the terminals of the field winding for two or three seconds.
This should be carried out at rated speed.

5.6 - Tableau des valeurs moyennes normales 4 pôles - 50 Hz - (400V pour les excitations)

Les valeurs de tension et de courant s'entendent pour marche à vide et en charge nominale avec excitation séparée. Toutes les valeurs sont données à ± 10% (pour les valeurs éxactes, consulter le rapport d'essai) et peuvent être changées sans préavis.

5.6 - Normal average values - 50 Hz. 4 Pôles (400 V for excitation)

Values of voltages and currents are given for no-load and full rated load operation with separate excitation. All values are within ±10% (for real values consult test report) and may be changed accordingly without notice.

TYPE	Résistance à / at 20°C (Ω)						Excitation - 400 V - 50 Hz	
	Inducteur d'excitatrice Exciter field	Induit d'excitatrice Exciter armature	Stator - bob 1 Winding 1 - 1 phase	Bob. auxiliair. X1, X2	Auxiliar. windings Z1, Z2	Rotor Main fied	A vide AT no load i exc (A)	A charge nominale At rated load (S1) i exc (A)
41.1 VS0	5,7	0,52	0,664	0,54	0,85	2,25	0,85	2,8
41.1 M2	5,7	0,52	0,396	0,45	0,75	2,75	0,8	2,8
41.1 M3	5,7	0,52	0,242	0,39	0,57	3,2	0,9	2,8
41.2 M6	5,7	0,52	0,17	0,33	0,6	3,27	0,9	3
42.1 M6	5,7	0,043	0,17	0,31	0,55	0,15	1,2	3,7
42.1 L8	5,7	0,043	0,12	0,44	0,57	0,17	1,2	3,4
42.1 L8L	5,7	0,043	0,12	0,44	0,57	0,17	1,2	3,9
			Bob 6 Winding 6					
44.1 S1	6,3	0,084	0,118	0,284	0,47	0,212	0,9	3,4
44.1 M3	6,3	0,084	0,061	0,284	0,47	0,259	1	3,1
44.1 M4	6,3	0,084	0,061	0,22	0,42	0,259	1	3,3
44.1 L6	6,3	0,084	0,041	0,22	0,42	0,317	1	3
44.1 L7	6,3	0,084	0,041	0,194	0,376	0,317	1	3,1
44.1 L7L / L8L	6,3	0,084	0,041	0,194	0,376	0,317	1	3,3

Pour les machines 60 Hz, les valeurs des résistances sont les mêmes. Les valeurs "i exc" sont approximativement de 5 à 10 % moins fortes.
Symboles utilisés :
"i exc": courant d'excitation de l'inducteur d'excitatrice.

For 60 Hz machines, the values of resistance are the same. The values of "i exc" are about 5 to 10 % weaker.
Symbol used :
"i exc" : excitation current in exciter field.

Alternator
LSA 41.1, 41.2, 42.1, 44.1 - 4P

5.7 - Régulateur de tension R 438 LS

ATTENTION : IL EST DANGEREUX DE PROCÉDER A UN ESSAI DIELECTRIQUE SUR L'ALTERNATEUR SANS DÉBRANCHER TOUTES LES LIAISONS AU RÉGULATEUR.

LES DOMMAGES CAUSÉS AU RÉGULATEUR DANS DE TELLES CONDITIONS NE SONT PAS COUVERTS PAR NOTRE GARANTIE.

5.7.1 - Description

Les composants électroniques montés dans un boitier plastique sont enrobés dans un élastomère opaque. Le raccordement se fait à partir de languettes mâles "Faston" 6,3.

5.7 - Automatic Voltage Regulator R 438 LS

CAUTION : IT IS HAZARDOUS TO PROCEED TO ANY HIGH VOLTAGE TEST ON THE ALTERNATOR WITHOUT HAVING PREVIOUSLY DISCONNECTED ALL CONNECTIONS TO VOLTAGE REGULATOR. DAMAGES OCCURING TO AVR IN SUCH CONDITIONS WILL NOT BE CONSIDERED IN A WARRANTY CLAIM.

5.7.1 - General

The PC board with electronic components is located inside an insulating plastic box and embeded in elastomere resin.Terminals consist in 1/4" "Faston" lugs.

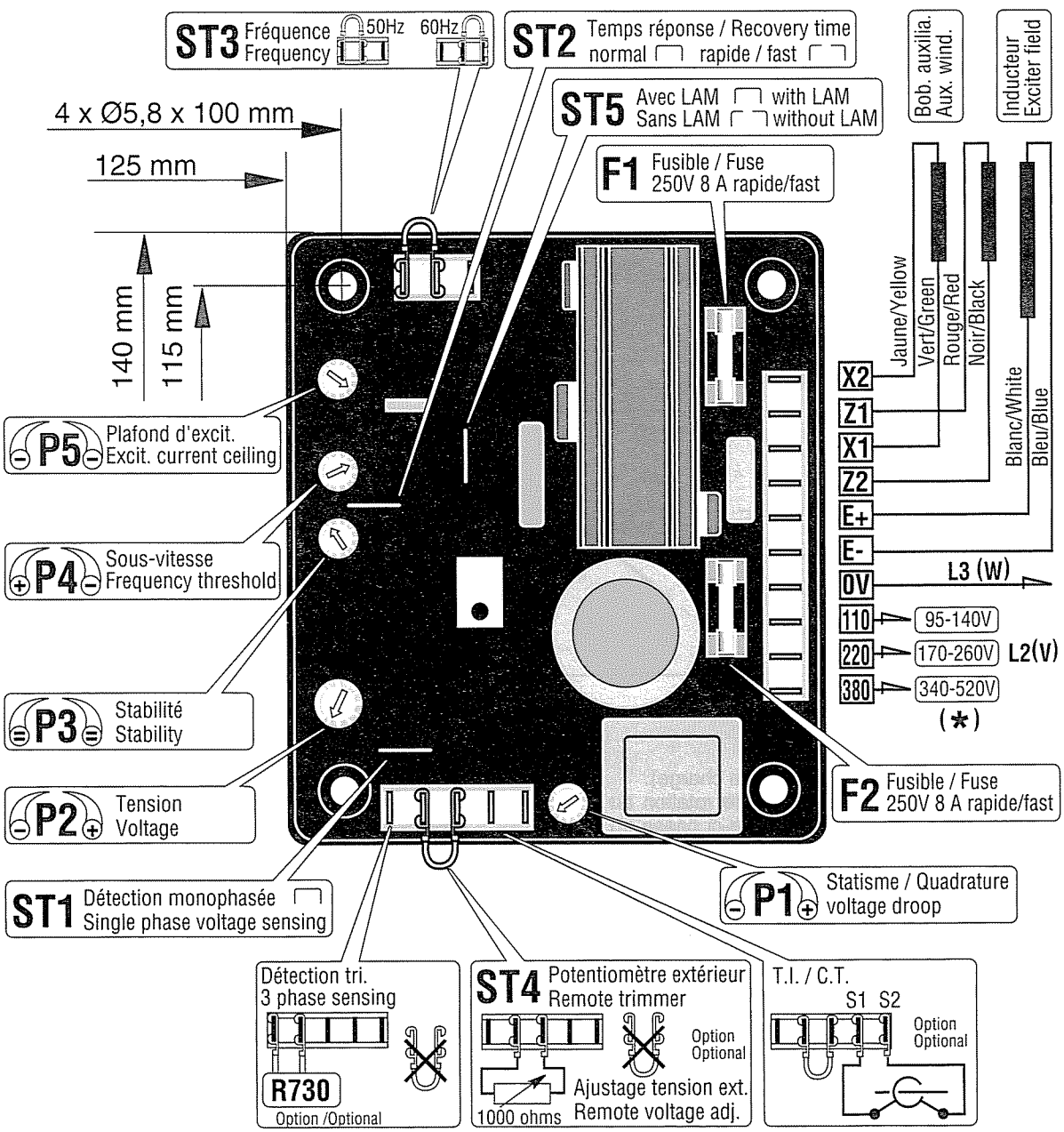

5.7.2 - Caractéristiques

- alimentation standard ; 2 bobinages auxiliaires (X1X2,Z1Z2)
- alimentation shunt ; max 100 à 150V - 50/60 Hz
- courant de surcharge nominal : 8A, 10s
- protection électronique (surcharge, court-circuit ouverture de la détection tension): courant de plafond d'excitation pendant 10 secondes puis retour à environ 1A.

Il faut arrêter l'alternateur (ou couper l'alimentation) pour réarmer.

- protection en entrée par fusibles F1,F2.
- détection de tension : 5 VA isolée par transformateur
bornes 0-110 V = 95 à 140 V
bornes 0-220 V = 170 à 260 V
bornes 0-380 V = 340 à 520 V
réglages par potentiomètre P2
- autres tensions par transformateur d'adaptation
- détection de courant : (marche en parallèle) : T.I. 2,5 VA cl1, secondaire 1A (Option)
- réglage du statisme par potentiomètre P1
- protection en sous-vitesse (U/f) et LAM : seuil d'action réglable par potentiomètre P4
- réglage du courant d'excitation maximum par P5 : 4,5 à 8A.
- sélection 50/60 Hz par strap ST3.

5.7.3 - LAM

- LAM : action éliminée en coupant le strap ST5

5.7.2 - Regulators data

- normal power supply : 2 auxiliary windings (X1X2,Z1Z2)
- shunt supply : 100 to 150V - 50/60Hz
- rated overload current : 8A, 10s.
- electronic inbuilt protection (overload short circuit, loss of sensing): the excitation current rises to ceiling level during 10 seconds, then drops to about 1A.

The alternator must be stopped (either cut off the supply) to reset this protection.

- protection of power inputs by fuses F1,F2 .
- voltage sensing : 5 VA insulated through transformer
terminals 0-110 V = 95 to 140 V
terminals 0-220 V = 170 to 260 V
terminals 0-380 V = 340 to 520 V
- voltage adjustment by pot P2
- other voltages by using an adapting transformer
- current sensing (parallel operation) C.T. 2,5 VA class 1 secondary current 1A (optional).
- adjustment of quadrature droop with pot P1
- Underspeed protection (U/f) and LAM : threshold frequency adjustable by P4.
- adjustment of excitation ceiling current by P5: 4,5 to 8A
- 50/60 Hz selection by jumper ST3.

5.7.3 - Load acceptance module

- action of LAM is suppressed by cutting ST5

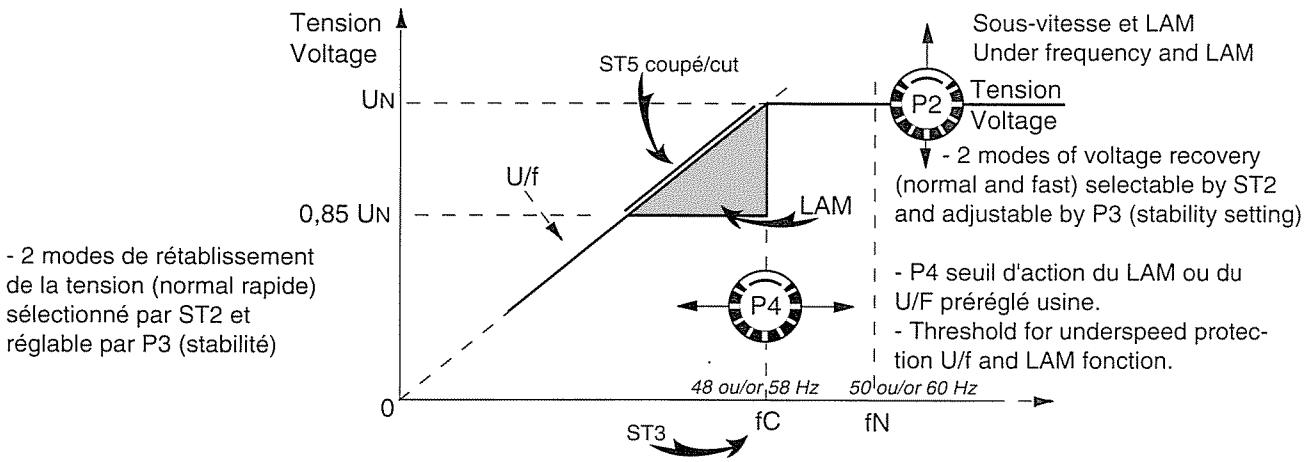

- Rôle du "LAM" (Atténuateur d'à coups de charge).
A l'application d'une charge, la vitesse de rotation du groupe électrogène diminue. Quand celle-ci passe en dessous du seuil de fréquence préréglé, le "LAM" fait chuter la tension d'environ 15% et de ce fait l'échelon de charge active appliqué est réduit d'environ 25%, tant que la vitesse n'est pas remontée à sa valeur nominale.
Le "LAM" permet donc, soit de réduire la variation de vitesse (fréquence) et sa durée pour une charge appliquée donnée, soit d'augmenter la charge appliquée possible pour une même variation de vitesse (moteurs à turbo compresseurs).
Pour éviter les oscillations de tension, le seuil de déclenchement de la fonction "LAM" doit être réglé environ 2 Hz en dessous de la fréquence la plus basse en régime établi.

- LAM (Load Acceptance Module) function.
When applying a step load, the rotationnal speed (frequency) of the gen-set drops. Below the prest value of frequency the "LAM" drops the voltage of about 15% and by this way reduces the effective step of about 25%,as long as the speed has not recovered the rated value.
The "LAM" so enables, either to reduce the speed drop, and the duration of it for the same step load, or to increase the applicable step load for the same speed variation (turbo charged engines).
To prevent voltage oscillations, the frequency threshold must be adjusted about 2 Hz below the lowest frequency in normal steady state operation.

EFFETS TYPIQUES DU "LAM" AVEC UN MOTEUR DIESEL TURBO
"LAM" TYPICAL EFFECT WITH TURBO CHARGED ENGINES

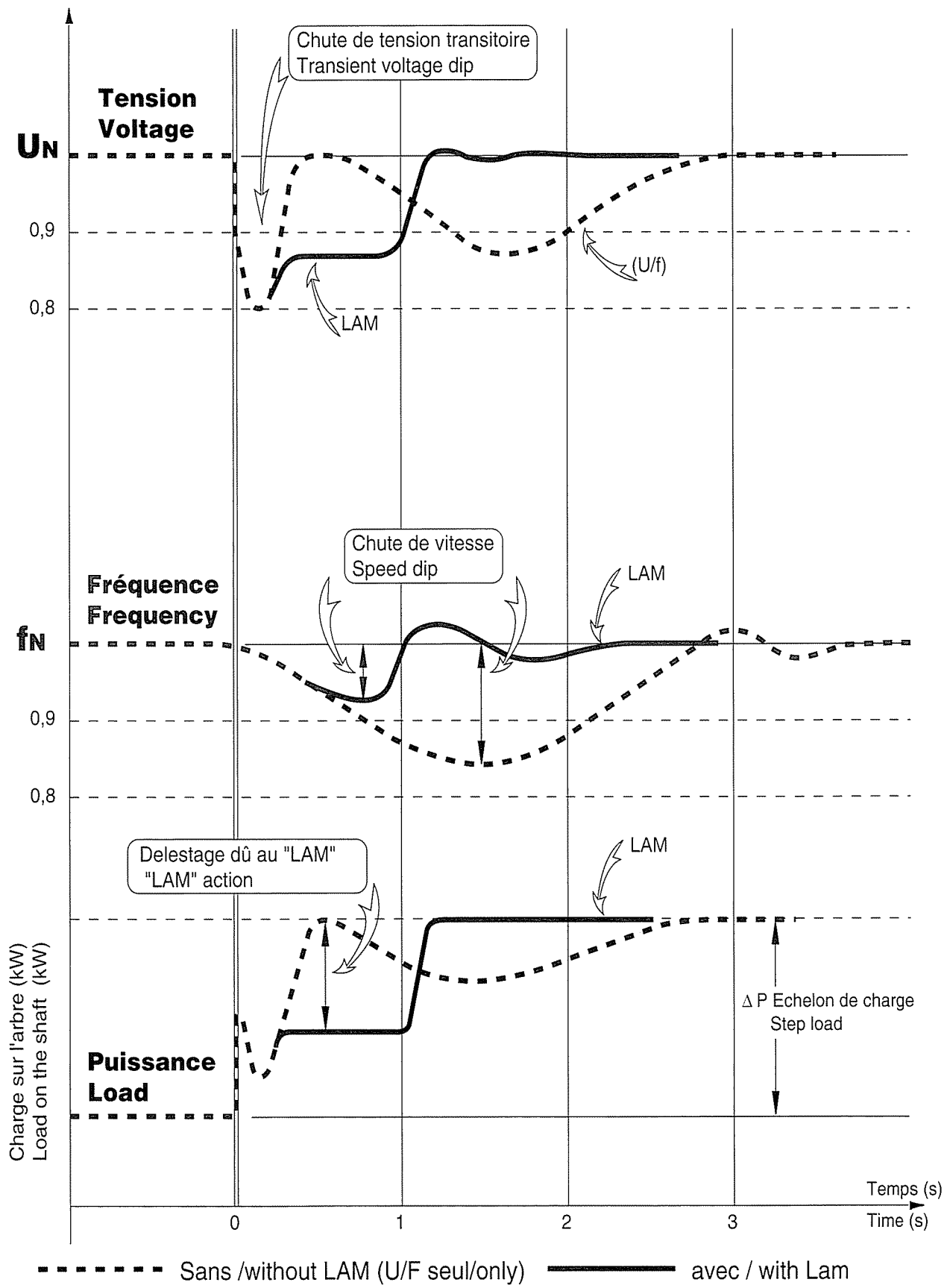

5.7.4 - Options

- T.I. pour marche en parallèle
- potentiomètre de réglage de tension extérieur : 470 Ω (*) 1 W mini : plage de réglage ± 5% (centrage de la plage par le potentiomètre tension intérieur). Enlever ST4 pour raccorder le potentiomètre.
- détection de tension triphasé: module extérieur R 730 : 200 à 500 V. Couper ST1 pour raccorder le module; réglage de la tension par le potentiomètre du module
- régulation du cos φ (2eme fonction) et égalisation des tensions avant couplage en parallèle réseau (3eme fonction).

T.I. de ...../1A . 5 VA CL 1
Module R 724 : 2 fonctions - (monté à l'extérieur).
Module R 725 : 3 fonctions - (monté à l'extérieur).

- antiparasitage (cl K . VDE 0875) - module R 790

(*) N.B. : Un potentiomètre de 1 k Ω peut aussi être utilisé pour élargir la plage de variation.

- Le module R 730 n'est pas compatible avec la marche en parallèle.

5.7.5 - Utilisations particulières

A) - Désexcitation

La coupure de l'excitation s'obtient par la coupure de l'alimentation du régulateur (1 fil sur chaque bobinage auxiliaire) calibre des contacts 10A - 250V alt.

Branchement identique pour réarmer la protection interne du régulateur.

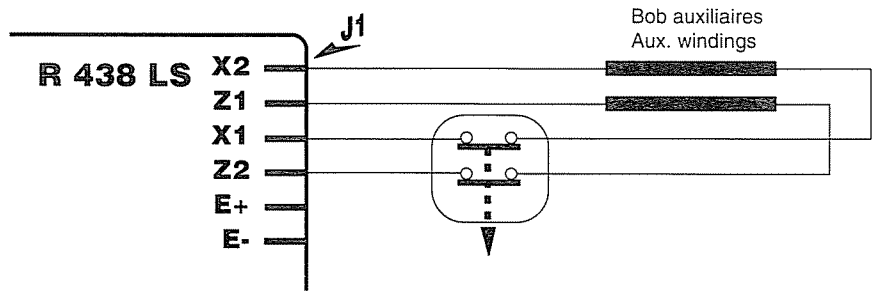

Same connection to reset internal protection of AVR.

B) - Excitation forcée

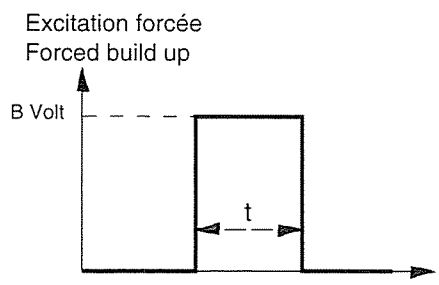

5.7.4 - Optional items

- C.T. for parallel operation with other generators
- remote voltage adjusting potentiometer 470Ω .1.Wmini (*) giving an adjustment range of ± 5% (centering of the range by using internal P2 potentiometer). Remove ST4 to connect the potentiometer.
- three phase sensing : additional modul R 730 : 200 to 500 V. Cut ST1 to connect the module. Voltage is adjusted by using the voltage adjustment potentiometer on the module.
- power factor regulator (2 nd function) and voltage equalisation before paralleling with the mains (3 rd function)

C.T. ...../1A . 5 VA CL 1
Module R 724 : 2 functions - (external).
Module R 725 : 3 functions - (external).

- EMI suppression (acc VDE 0875, class k) module R790

(*) Note : For a wider voltage range - 1 kΩ /3W may be used.

- R 730 module is not compatible with paralleling.

5.7.5 - Special applications

A) - Field de-energizing

Cutting excitation current is fulfilled by switching off the supply to AVR (1 lead on each auxiliary winding)
Contacts caliber : 10A . 250V AC

B) - Forced build-up

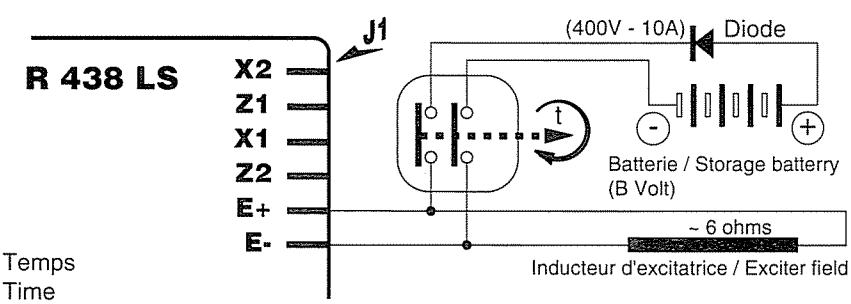

Applications	B VOLT	Temps / Time t	Application
Amorçage de sécurité Couplage en parallèle désexcité	6 (1 A)	1 - 2 s	Safety flashing Paralleling when de-excited
Couplage en parallèle à l'arrêt	12 (2 A)	5 - 10 s	Paralleling when at standstill
Démarrage par la fréquence Amorçage en surcharge	24 (4 A)	5 - 10 s	Frequency starting Build-up in over load

5.7.6 - Vérification préalable :
Contrôler les fusibles F1, F2.

5.7.6 - Preliminary check
Check fuses F1, F2

Katolight Service - Master Repair Manual - Page 254

Alternator
LSA 41.1, 41.2, 42.1, 44.1 - 4P

5.7.8 - Vérification statique du régulateur

*** Un fonctionnement correct du régulateur en essais statique ne signifie pas une marche correcte en conditions réelles.**
*** Si le test statique est négatif, on peut en conclure avec certitude que le régulateur est défectueux.**

- Brancher une ampoule test selon le schéma.
- La tension d'alimentation doit être comprise entre 100 et 130 V, la tension de l'ampoule est de 110 Volts. La puissance de l'ampoule sera inférieure à 100 Watts.

b) - Régler la vis de réglage tension du régulateur P2 à fond à gauche.

c) - Mettre le régulateur sous tension: la lampe doit s'allumer et s'éteindre momentanément.

d) - Tourner lentement la vis de réglage tension à droite

- à fond à droite, la lampe est allumée complètement.
- au point de régulation, une légère rotation de la vis de réglage tension dans un sens ou dans l'autre doit allumer ou éteindre la lampe. Si l'ampoule reste toujours allumée ou éteinte le régulateur est défectueux.

5.7.8 - Static test AVR

*** A proper operation of A.V.R. through static tests does not mean necessarily it can operate properly in réal situation.**
*** Reversely, if the A.V.R. does not react properly during static tests, it is obviously out of duty.**

- Connect the test setup as shown here after.
- The supply voltage must be in the range 100 - 130 V and the lamp voltage either 110 V.

Lamp power : less than 100 Watt

b) - Adjust regulator voltage; adjust screw P2 to maximum CCW

c) - Apply power to the AVR : lamp should flash momentarily

d) - Slowly rotate the AVR voltage screw clockwise:

- the lamp reaches full brillance before to be fully clockwise
- at the regulating point a small change in the screw position turns on or off. If the lamp remains dark or light the AVR is not operating.

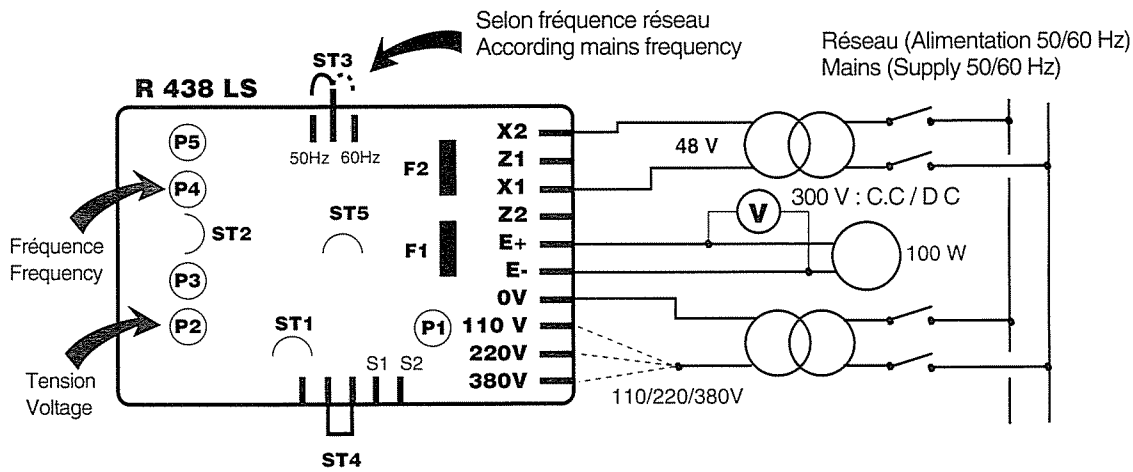

Faire un premier essai en alimentant le régulateur par les bornes X1, X2, puis un second par les bornes Z1,Z2.

Make an intial test by supplying AVR through terminals X1,X2, then a second test by supplying it through terminals Z1,Z2.

5.7.9 - Vérification statique du LAM (sous-vitesse)

- potentiomètre de tension P2 en position juste allumé, tourner le potentiomètre P4 lentement vers la gauche. L'éclat de la lampe doit baisser brusquement: la tension chute à environ 85 % de la tension d'alimentation. Revenir à la position de départ de P4. La lampe doit briller comme précédemment.

5.7.9 - Static test LAM (underspeed protection)

- the voltage adjustment P2 should be preset in position where the lamp just begins to glow. Turn P4 slowly CCW the brightness should decrease suddenly : voltage at AVR's output E+, E- falls about 15%. Then reset P4 to initial position : the lamp should glow as before.

5.8 - Réglage du régulateur R 438 LS

5.8.1 - Réglage tension , LAM (ou U/F) stabilité

Action	Réglage usine(R.U.)	Pot.	Action	Factory adjustment (A.F)
Tension minimum à fond à gauche	400V - 50 Hz (Entrées 0 - 380 V)	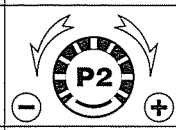	**Voltage** minimum fully CCW	400V - 50 Hz (0 - 380 V)
Stabilité	Non réglé (position milieu)		**Stability**	Not adjusted (middle)
Seuil/LAM ou U/F Seuil de la protection de sous-vitesse et déclenchement du "LAM" Maxi de fréquence à fond à gauche	ST3 = Position 50 Hz (R.U.) = 48 Hz ST3 = Position 60 Hz (R.U.) = 58 Hz	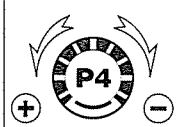	**THreshold/LAM or U/F** Threshold for under-speed protection U/f and LAM function	ST3 on 50 Hz (A.F..) = 48 Hz ST3 on 60 Hz (A.F.) = 58 Hz
Statisme de tension (Marche en // avec T.I.) - Statisme 0 à fond à gauche.	Non réglé (à fond à gauche.)	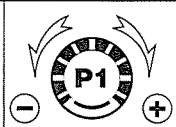	**Quadrature voltage droop** (Parallel operation with C.T.) - No droop fully CCW	Not adjusted (fully CCW)
Plafond d'excitation Limitation du courant d'excitation et du courant de court-circuit, minimum à fond à gauche	10 A ou maximum	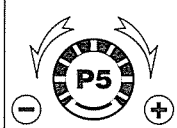	**Ceiling excitation current** Excitation current and short circuit current limitation, minimum fully CCW	10 A or maximum

5.8.1.1 - Sélection des modes de fonctionnement
- détection de tension (transformateur)

R.U. = 0 - 380 V

	Bornes / Terminals		
50 Hz et/and 60 Hz	0 - 110 V	0 - 220 V	0 - 380 V
Plages / Ranges	95 - 140 V	170 - 260 V	340 - 520 V

A.F. = 0 - 380 V

- fréquence (protection + LAM) , selecteur ST3
R.U. = 50 Hz

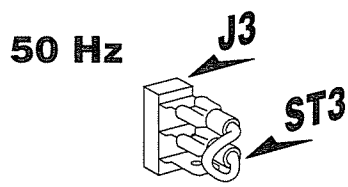

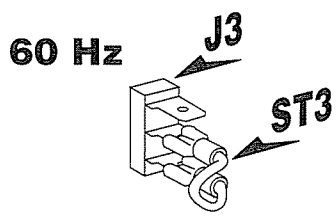

- frequency (protection + LAM), selector jumper ST3
A.F. = 50 Hz

- temps de réponse : strap ST2
R.U. = normal



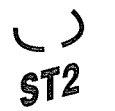

- voltage recovery speed : link ST2
A.F. = standard

- réglage de tension : ST4
R.U. = interieur

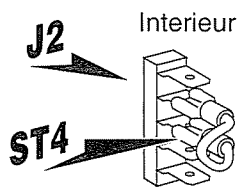

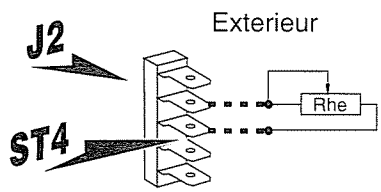

- voltage setting : ST4
A.F. = Internal

Katolight Service - Master Repair Manual - Page 256

Alternator
LSA 41.1, 41.2, 42.1, 44.1 - 4P

5.8.1.2 - Procédure de réglage
a) Position initiale des potentiomètres
- P2 TENSION : minimum à fond à gauche.
- P3 STABILITE : milieu.
- P1 STATISME : 0 à fond à gauche.
- P5 PLAFOND D'EXCITATION : ne pas toucher si non nécessaire (voir 5.8.2.), maximum à fond à droite.
- Potentiomètre extérieur Rhe = 470 Ω (strap ST4 enlevé) : milieu.

b) Installer un volmètre analogique (à aiguille) cal. 50V C.C. aux bornes E+, E- et un volmètre C.A. cal 300 - 500 ou 1000V aux bornes de sortie de l'alternateur.

c) S'assurer que le strap 50/60 HZ est positionné sur la fréquence souhaitée.

d) Potentiomètre tension (P2) au minimum, fond à gauche (sens anti-horaire).

e) Tourner le potentiomètre V/Hz (P4), fond à droite (sens horaire).

f) Potentiomètre stabilité (P3) aux environs d'1/3 de la butée anti-horaire.

g) Démarrer et régler la vitesse du moteur à la fréquence de 48 Hz pour 50 Hz, ou 58 pour 60 Hz.

h) Régler la tension de sortie par (P2) à la valeur désirée.
- tension nominale UN pour fonctionnement en solo (par ex. 400 V)
- ou UN + 2 à 4% pour marche parallèle avec T.I. (par ex. 410V -)

Si la tension oscille, régler par (P3) (essayer dans les 2 sens) en observant la tension entre E+ et E- (env 10V C.C.). Le meilleur temps de réponse s'obtient à la limite de l'instabilité. S'il n'y a aucune position stable, essayer en coupant ou en remettant le strap ST2 (normal /rapide).

i) Tourner lentement le potentiomètre (P4) dans le sens anti-horaire jusqu'à une chute de tension importante (environ 15 %).

j) Faire varier la fréquence (vitesse) de part et d'autre de 48 ou 58 Hz selon la fréquence d'utilisation, et vérifer le changement de tension vu précédemment (~ 15%).

k) Réajuster la vitesse du groupe à sa valeur nominale à vide.

RÉGLAGES EN MARCHE PARALLÉLE

NB : Avant toute intervention sur l'alternateur s'assurer que les statismes de vitesse des moteurs sont identiques.

l) Préréglage pour marche en parallèle (avec T.I. raccordé à S1, S2 du connecteur J2)
- Potentiomètre P1 (Statisme) en position milieu.

Appliquer la charge nominale (cos φ = 0,8 inductif).
La tension doit chuter de 2 à 3 %. Si elle monte, permuter les 2 fils arrivant du secondaire du T.I.

m) Les tensions à vide doivent être identiques sur tous les alternateurs destinés à marcher en parallèle entre eux.
- Coupler les machines en parallèle.
- En réglant la **vitesse** essayer d'obtenir **0 Kw**

5.8.1.2 - Adjustment procedure
a) Initial setting of potentiometers
- P2 VOLTAGE : lowest fully CCW.
- P3 STABILITY : middle position.
- P1 QUADRATURE VOLTAGE DROP : fully CCW
- P5 EXCITATION CURRENT LIMIT : to be adjusted only if necessary (see 5.8.2.) maximum fully CW.
- Remote voltage trimmer Rhe - 470 Ω (jumper ST4 removed) : middle position.

b) Connect one analoge (needle) voltmeter cal. 50V D.C. across E+, E- terminals and another (300V - 500V or 1000V A.C. across the alternator output terminals.

c) Make sure that the 50/60 Hz link is correctly connected.

d) (P2) potentiometer must be set maximum anti-clokwise.

e) (P4) (V/Hz) must be set maximum clokwise.

f) (P3) (Stability) has to be adjusted maximum clokwise -1/3.

g) Start and adjust the engine speed corresponding to 48 Hz for 50 Hz (nominal) or 58 for 60 Hz.

h) Adjust output voltage with (P2) to the required value
- rated voltage UN if generator operates alone (for example 400V)
- or UN + 2 to 4% for parallel operation with C.T. (i.e. 410V - see below)

If voltage is unstable, adjust (P3) (try in both directions), noting voltage across E+, E- (approx.10V D.C.). The fastest recovery time may be achieved when (P3) is set close to the limit of unstability. If there is none stable position try another adjustment after having cut or reconnected link ST2 (normal / fast).

i) Turn (P4) anticlockwise until the voltage drops (about 15 %)

j) Modify the speed value around 48 or 58 Hz in order to check the LAM voltage drop (~ 15%).

k) Readjust the speed of gen-set to its normal no-load level.

ADJUSTMENTS IN PARALLEL OPERATION

Note : Preliminary to any adjustment on the alternator, make sure the speed statism of the engines are similar.

l) Presetting for parallel operation (with C.T. connected to terminals S1,S2 of terminal strip J2)
- Potentiometer P1 (Voltage droop) in middle position.

Switch on the rated load (P.F. 0,8 inductive). The output voltage should drop 2% to 3%. If it raise, change over the 2 leads coming from C.T. secondary.

m) No load voltages must be identical on all gen-sets required to work together in parallel.
- Synchronise and parallel the gen-sets together.
- By adjusting **speed** , try to reduce the power exchange. to **0 KW**
- By adjusting voltage pot (P2 or Rhe) on one of the machines try to cancell (or minimize) the circulating **current**.

d'échange de puissance.
- En agissant sur le réglage de tension P2 ou Rhe d'une des machines, essayer d'annuler (ou minimiser) **le courant** de circulation entre les machines
- **Ne plus toucher aux réglages de tension.**

n) Appliquer la charge disponible (le réglage ne peut être correct que si on dispose de charge **réactive**)
- En agissant sur la **vitesse** égaliser les **KW** (ou répartir proportionnellement aux puissances nominales des groupes)
- En agissant sur le potentiomètre statisme **P1**, égaliser ou répartir les **courants**.

5.8.2 - Réglage excitation maxi (plafond d'excitation)
- réglage statique de la limitation de courant, potentiomètre P5 (réglage usine : 7,5 A, calibre des fusibles : 6,3A - 10 secondes)

- Do not alter the voltage adjustments.

n) Switch on the available load (correct adjustment cannot be made if there is no **reactive** load).
- By adjusting **speed** , balance the KW (proportionnally to the rated powers of gen-sets).
- By adjusting Voltage droop pot. **P1** , balance the output currents.

5.8.2 - Adjustment of maximum excitation current (Excitation ceiling)
- static adjustment of excitation current limitation, potentiomètre P5 (factory adjustment : 7,5 A, fuse caliber : 6,3 A - 10 seconds).

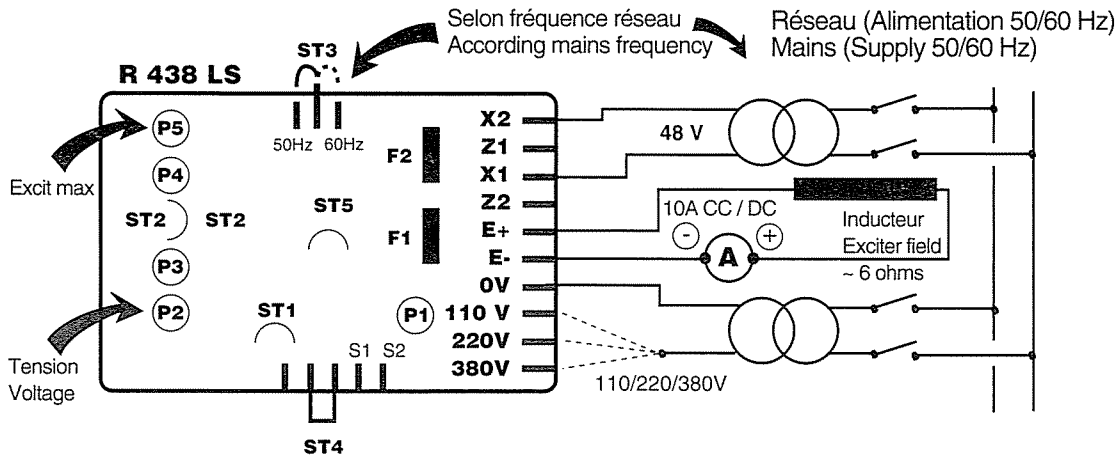

Le réglage usine correspond à celui du courant d'excitation nécessaire pour obtenir un courant de court-circuit triphasé d'environ 3 IN à 50 Hz pour la puissance industrielle, sauf spécification autre.(*)
Pour reduire cette valeur ou pour adapter le Icc à la puissance réelle maxi d'utilisation (machine déclassée) on peut procéder à un réglage statique à l'arrêt, non dangereux pour l'alternateur et l'installation. Débrancher les fils d'alimentation X1,X2 et Z1,Z2 la référence tension (0-110V-220V-380V) de l'alternateur.
Brancher l'alimentation réseau (200-240V) comme indiqué (X1,X2 : 0-110V). Installer un ampèremètre 10A C.C. en série avec l'inducteur d'excitatrice. Tourner P5 à fond à gauche, enclencher l'alimentation. Si le régulateur ne débite rien, tourner le potentiomètre P2 (tension) vers la droite jusqu'à ce que l'ampèremètre indique un courant stabilisé.Couper et remettre l'alimentation, tourner P5 vers la droite jusqu'à obtenir le courant maxi désiré (se limiter à 8 A).
Vérification de la protection interne:
Ouvrir l'interrupteur (D): le courant d'excitation doit croître jusqu'à son plafond pré-réglé, s'y maintenir pendant un temps ≥ 10 seconds et retomber à une valeur < 1A.
Pour réarmer il faut couper l'alimentation par l'interrupteur (A).
Nota : Après réglage du plafond d'excitation selon cette procédure, reprendre le réglage de tension selon § 5.8.1.2.
(*): Avoir un courant de court-circuit égal à 3 IN est une obligation légale dans plusieurs pays pour permettre une protection selective.

The factory adjustment corresponds to the excitation current for a sustained 3 phase short circuit, of about 3 times the rated current ,unless otherwise specified.(*)
It is possible to reduce the maximum excitation level by a static method which is safer for the alternateur and the network.
Disconnect the supply leads (X1,X2,Z1,Z2) and sensing leads (0-110-220-380) from A.V.R.. Connect the supply as shown (X1,X2,0,110V). Connect an ammeter (10A , dc) in series with the exciter field. Turn P5 fully CCW. Switch on the supply. If there is no output current from AVR, turn P2 (voltage) clockwise until ammeter indicates a stabilized current.
Switch the supply off, then on again. Turn P5 clockwise until the required current is obtained in the exciter field. (limit to 8A)
Checking internal protection :
Switch off (D) : the excitation current must rise to the pre-set high level, and remain at this level for a period of more than 10 seconds, than fall to less than 1A.
To reset, switch off the supply by opening switch (A).

Note : After having adjusted the excitation current limitation as indicated above, proceed to the voltage/frequency adjustment according to § 5.8.1.2.

(*) : In many countries the short-circuit current equal to 3 IN is obligatory in order to allow selective tripping of circuit breakers.

Katolight Service - Master Repair Manual - Page 258

6 - DEMONTAGE - REMONTAGE

6.1 - Accès aux connexions et au système de régulation

6.1.1 - LSA 41.1,41.2, 42.1.

L'accès aux bornes se fait directement après avoir enlevé la partie supérieure du capotage (48) .
Afin de faciliter l'accès aux potentiomètre de réglage du régulateur ,il est conseillé de démonter la plaque latérale le supportant et de la refixer en position inversée (fig 1).

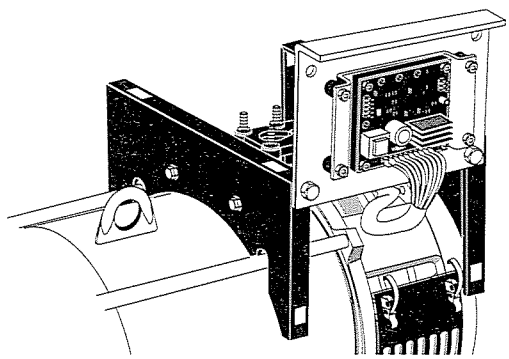

Fig 1

6.1.2 - LSA 44.1.

L'accès aux bornes se fait directement après avoir enlevé la partie supérieure du capotage (48) .
L'accès aux régulateur se fait directement après avoir enlevé la porte du capotage (466)(fig 2) .

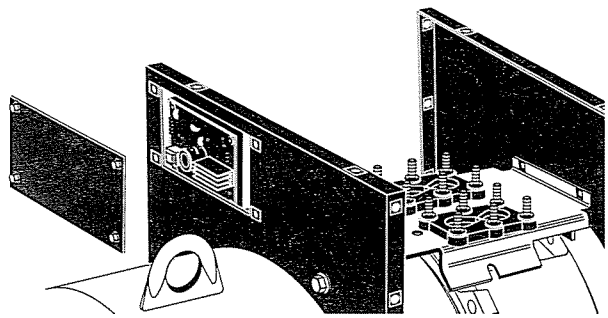

Fig 2

6.2 - Accès aux diodes

- Retirer la grille d'entrée d'air (51)
- Débrancher les diodes
- Vérifier les 6 diodes à l'aide d'un ohmmètre ou d'une lampe (cf § 5 - 4).

6.3 - Remplacement des diodes (LSA 41.1, 41.2)

6.3.1- Démontage

- Déposer le capot supérieur (48)
- Déconnecter le régulateur et les planchettes à bornes.
- Déposer les 2 vis HM6 et les vis CHc M6 du support de planchettes (120) et extraire l'ensemble boite à bornes.
- Démonter le flasque arrière (36)
- Retirer la varistance (347)
- Démonter les 4 vis "H" de fixation des ponts de diodes sur le support (107)

6.3.2- Remontage

- Remonter les ponts en respectant les polarités (cf § 5 - 4).
- Remonter la varistance (347)
- Remonter le flasque arrière, passer le faisceau de câbles entre les barrettes supérieures du flasque.
- Remonter l'ensemble boite à bornes.
- Reconnecter la machine selon schéma de connexions.
- Reposer le capot supérieur (48).

6.4 - Remplacement des diodes (LSA 42.1/LSA 44.1)

6.4.1- Démontage

- Retirer la grille d'entrée d'air (51).
- Débrancher les diodes.
- Retirer la varistance (347)
- Déposer les croissants support de diodes.

6 - DISMANTLING - REASSEMBLY

6.1 - Access to connections and regulation system

6.1.1 - LSA 41.1,41.2, 42.1.

Access to the terminals by removing the terminal box lid (48).
In order to facilitate the A.V.R. adjustments it is adviced to remove the side panel holding the A.V.R. and to return it (refer to fig 1).

6.1.2 - LSA 44.1.

Access to the terminals by removing the terminal box lid (48).

Access to the A.V.R. by removing the terminal box panel (466).
(Refer to fig 2).

6.2 - Diodes access

- Remove the air inlet screen (51)
- Disconnect the diodes and check the diodes either by ohmeter or battery lamp (ref § 5 - 4).

6.3 - Replacement of diodes (LSA 41.1, 41.2)

6.3.1 - Dismantling

- Remove the terminal box cover (48).
- Disconnect A.V.R and terminals plate.
- Remove two screws HM6 and two screws CHc M6 of terminal plate support (120) and remove the complete terminal box .
- Remove N.D.E. bracket (36).
- Remove the surge suppressor (347) .
- Remove the diode crescent assembly.

6.3.2 - Reassembling

- Replace diode crescent to respect polarity (cf § 5 - 4).
- Reassemble the surge suppressor (347).
- Reassemble N.D.E bracket (36).
- Fix the terminal box assembly , connect the terminals in according to connection diagram.
- Fix the terminal box cover (48).

6.4 - Replacement of diodes (LSA 42.1/LSA 44.1)

6.4.1 - Dismantling

- Remove the air inlet screen (51)
- Disconnect the diodes.
- Remove the surge suppressor (347) .
- Remove the diode crescent assembly.

Alternator
LSA 41.1, 41.2, 42.1, 44.1 - 4P

6.4.2- Remontage
- Changer les diodes défectueuses en respectant les polarités (cf § 5 - 4).
- Remonter les croissants support de diodes.
- Remonter la varistance (347).
- Rebrancher les diodes.
- Reposer la grille d'entrée d'air (51).

6.5 - Remplacement du roulement arrière

6.5.1- Démontage
- Démonter le flasque arrière (36) cf § 6.3.1.
- Enlever le roulement (70) à l'aide d'un extracteur à vis centrale

6.5.2- Remontage
- Monter un roulement neuf après avoir chauffé sa bague intérieure par induction ou en étuve à 80 °C (ne pas utiliser de bain d'huile).
- Placer la rondelle de précharge (79) dans le flasque et installer un joint torique neuf (349).
- Remonter le flasque arrière (36) cf § 6.3.2.

6.6 - Remplacement des roulements sur machine bipalier

6.6.1 - Démontage
- Désaccoupler l'alternateur du moteur d'entraînement.
- Déposer le capot supérieur (48).
- Déposer les 4 écrous (38).
- Déposer les 2 vis (62) du flasque AV (30) .
- Déposer le flasque AV(30)
- Extraire l'ensemble rotor (4) en faisant attention à ne pas endommager les bobinages.
- Retirer le circlips (284)
- Enlever les 2 roulements (60) et (70) à l'aide d'un extracteur à vis centrale.

6.6.2 - Remontage
- Monter le chapeau intérieur (68) sur le rotor.
- Monter des roulements neufs après les avoir chauffés par induction ou en étuve à 80 °C (ne pas utiliser de bain d'huile).
- Remonter le circlips (284).
- Vérifier la présence de la rondelle de précharge (79) et du joint torique (349) dans le flasque AR (36).
- Glisser le rotor (4) dans le stator.
- Visser sur le chapeau (68) une tige filetée M6 x 200 pour effectuer son montage (fig 3).
- Remonter le flasque avant (30), bloquer les 4 écrous (38) au couple de 3,8 m.da/N.
- Fixer le chapeau intérieur (68) par la vis inférieur (62) remplacer la tige filetée par la seconde vis (62).
- Reposer le capot supérieur (48).
- Vérifier le montage correct de l'ensemble de la machine et le serrage de toutes les vis.

NOTA: Lors d'un démontage total (rebobinage) ne pas oublier de réequilibrer le rotor

6.4.2 - Reassembling
- Replace diode damaged to respect polarity (ref § 5 - 4).
- Reassemble M.O. varistor (347).
- Connect the diodes
- Replace the air inlet screen (51)

6.5 - N.D.E. bearing replacing

6.5.1 - Dismantling
- Remove N.D.E. bracket (36) ref § 6.3.1.
- Extract bearing (70) with a bearing puller

6.5.2 - Reassembling
- Position the new ball bearing after heating its internal ring, by induction system at 80°C or in an oven at 80°C (do not use hot oil bathing).
- Install in N.D.E bracket the spring washer (79) and a new rubber "O" ring (349)
- Reassemble N.D.E bracket (36) ref § 6.3.2.

6.6 - Replacing of two bearing (two bearing units only)

6.6.1 - Dismantling
- Take off the alternator from the engine.
- Remove the terminal box cover (48).
- Remove the 4 nuts (38) fixing the endshield.
- Remove 2 screws (62).
- Remove D.E bracket (30).
- Remove rotor (4) taking care of not damaging windings.
- Remove circlip (284)
- Remove bearings (60) and (70) with a bearing puller.

6.6.2 - Reassembling
- Position the inner bearing cap (68) on the rotor
- Position the new ball bearing after heating it, by induction system at 80° C or in an oven at 80°C (do not use hot oil bathing).
- Position circlip (284)
- Place rubber "O" ring (349) the spring washer (79) into the recess in the non drive end bearing housing (36).
- Replace rotor (4) into the stator.
- Insure the alinement of the bearing cap (68) with the D.E. bracket (refer to fig 3)
- Replace the drive end bracket (30) on the stator (1) fasten by nuts (38) torqued at 3,8 m.da/N on studs (37).
- Fix the inner bearing cap (68) with lower bolt (62) and replace the rod by upper bolt (62).
- Fix the terminal box cover (48).
- Check that all nuts and bolts are correctly tightened

Note : If the rotor has been rewound, it must be rebalanced.

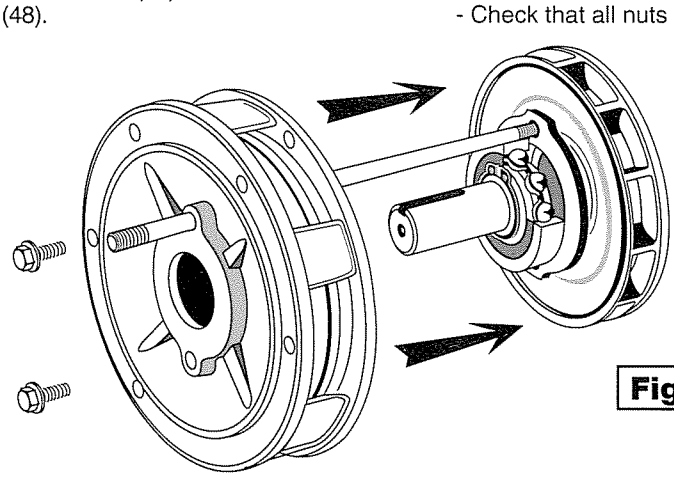

Fig 3

Katolight Service - Master Repair Manual - Page 260

7 - NOMENCLATURE

7 - PARTS

Rep	Nbre	Désignation	Rep	Nbre	Désignation
1	1	Ensemble stator	1	1	Wound stator assembly
4	1	Ensemble rotor	4	1	Wound rotor assembly
15	1	Turbine	15	1	Fan
18	1	Disque d'équilibrage	18	1	Balancing discs
21	1	Anneau de levage	21	1	Lifting eye
22	1	Clavette de bout d'arbre	22	1	Key
28	1	Borne de masse	28	1	Earth terminal
30	1	Flasque côté accouplement	30	1	D.E bracket
33	1	Grille de protection	33	1	Air exit screen
34	2	Vis de fixation	34	2	Bolts
36	1	Flasque côté excitatrice	36	1	N.D.E bracket
37	4	Tige de fixation	37	4	Rods
38	4	Ecrou	38	4	Nut
41	1	Partie avant du capotage	41	1	Terminal box panel D.E
48	1	Partie supérieure du capotage	48	1	Terminal box cover
49	12	Vis du capotage	49	12	Screws
51	1	Grille d'entrée d'air	51	1	Air inlet screen
60	1	Roulement avant	60	1	D.E bearing
62	2	Vis de fixation	62	2	Bolts
68	1	Chapeau intérieur	68	1	Inner bearing cap
70	1	Roulement arrière	70	1	N.D.E bearing
79	1	Rondelle élastique	79	1	Spring washers
90	1	Inducteur d'excitatrice	90	1	Wound exciter field
91	4	Vis de fixation	91	4	Bolts
100	1	Induit d'excitatrice	100	1	Wound exciter armature
106	1	Ensemble disque porte diodes (42.1)	106	1	Rotating diode assembly (42.1)
107	1	Support de croissant (41.1)(41.2)	107	1	Rotating diode carrier (41.1)(41.2)
120	1	Semelle	120	1	Terminal plate support
124	2	Planchette à bornes	124	2	Terminal plate
135	1	Joint de capotage	135	1	Sealing
139	1	Joint de capotage	139	1	Sealing
198	1	Régulateur	198	1	A.V.R
199	4	Vis de fixation	199	4	Bolts
284	1	Circlips	284	1	Circlip
320	1	Manchon d'accouplement	320	1	Driving hub
321	1	Clavette du manchon	321	1	Driving hub key
322	2	Disque d'accouplement	322	2	Driving discs
323	5 ou 6	Vis de fixation	323	5 ou 6	Bolts
325	(*)	Disque de calage	325	(*)	Spacer shim
330	1	Bride d'accouplement	330	1	Coupling flange
343	1	Croissant de diodes directes	343	1	Forward diode assembly
344	1	Croissant de diodes inverses	344	1	Reverse diode assembly
347	1	Varistance de protection (+ C. I.)	347	1	M.O. varistor (on P.C.)
349	1	Joint torique	349	1	Rubber "O ring"
364	1	Support régulateur	364	1	A.V.R. support
365	1	Partie arrière du capotage	365	1	N.D.E. terminal box
367	1	Porte du capotage régulateur	367	1	A.V.R. removable access panels
368	1	Porte du capotage	368	1	Removable access panels
371	4	Amortisseur	371	4	Shock absorber
410	1	Palier ammovible	410	1	D.E. bearing housing
411	6	Vis de fixation	411	6	Bolts
466	1	Porte d'accès régulateur	466	1	A.V.R. removable access panels

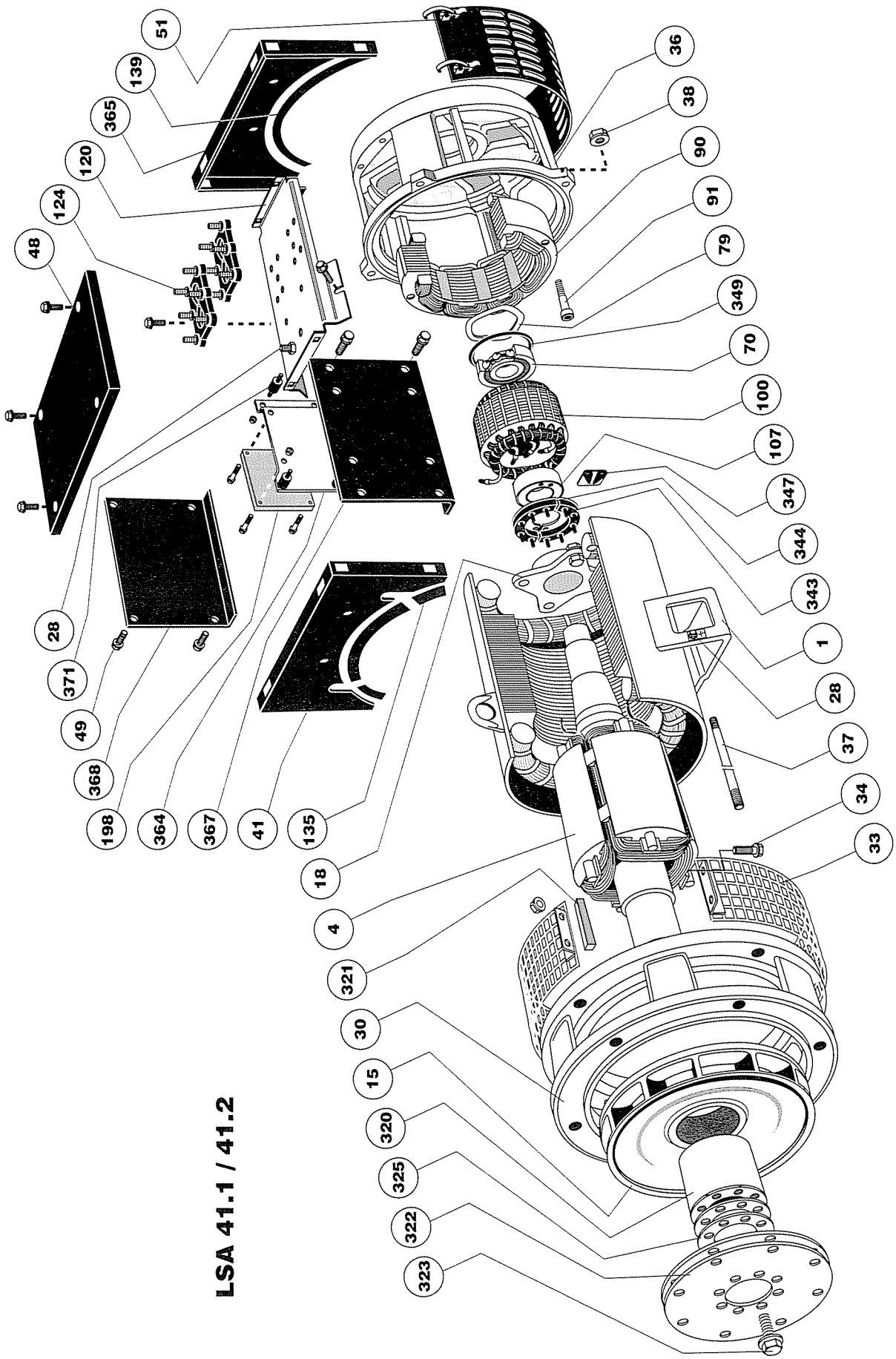
51
139
365
120
124
48
28
371
49
368
198
364
367
41
135
18
4
321
30
15
320
325
322
323
36
38
90
91
79
349
70
100
107
347
344
343
1
28
37
34
33

LSA 41.1 / 41.2

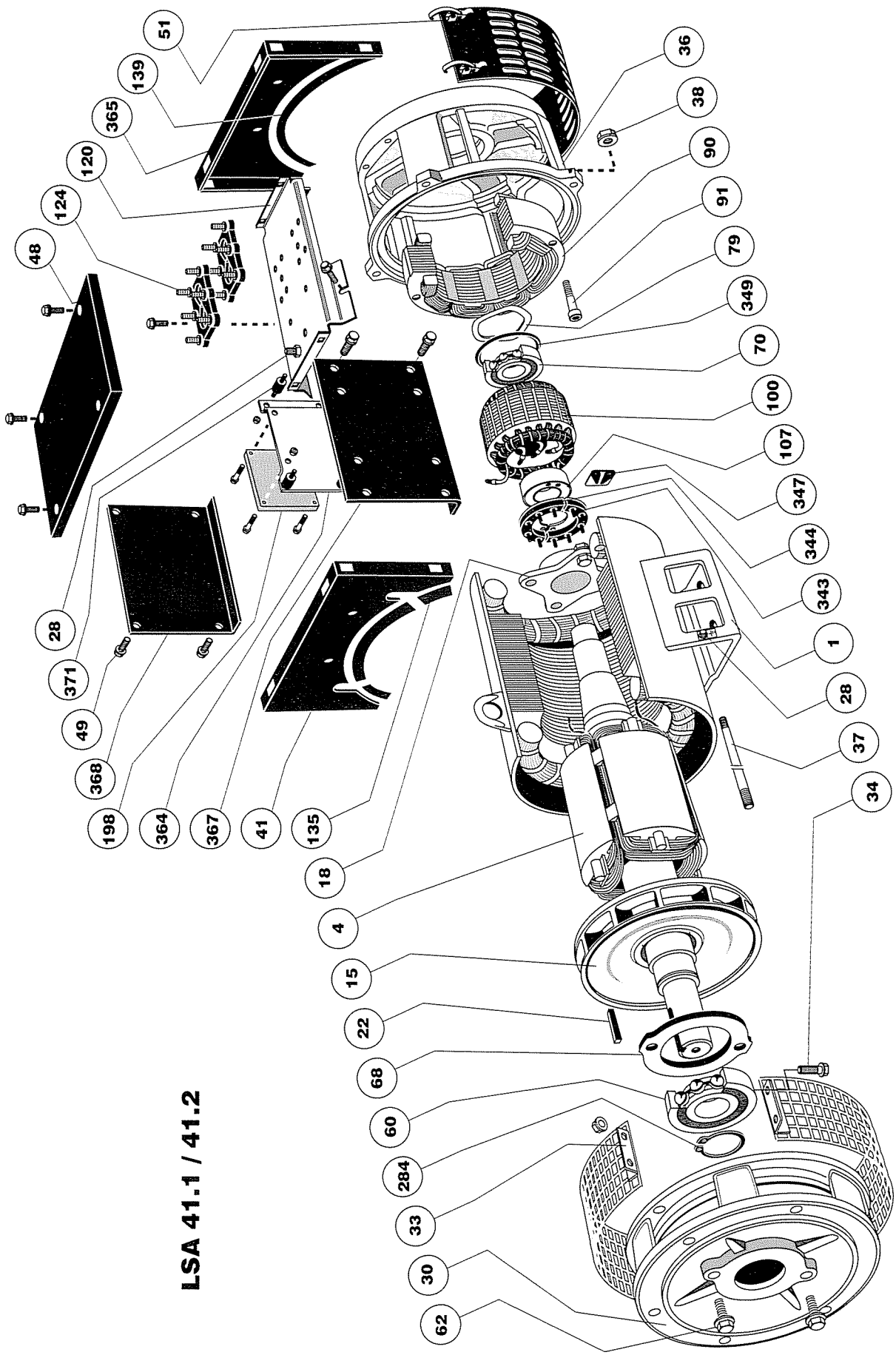
51
139
365
120
124
48
28
371
49
368
198
364
367
41
135
18
4
15
22
68
60
284
33
30
62
36
38
90
91
79
349
70
100
107
347
344
343
1
28
37
34

LSA 41.1 / 41.2

Alternateur
LSA 42.1 - 4P

Alternator
LSA 42.1 - 4P

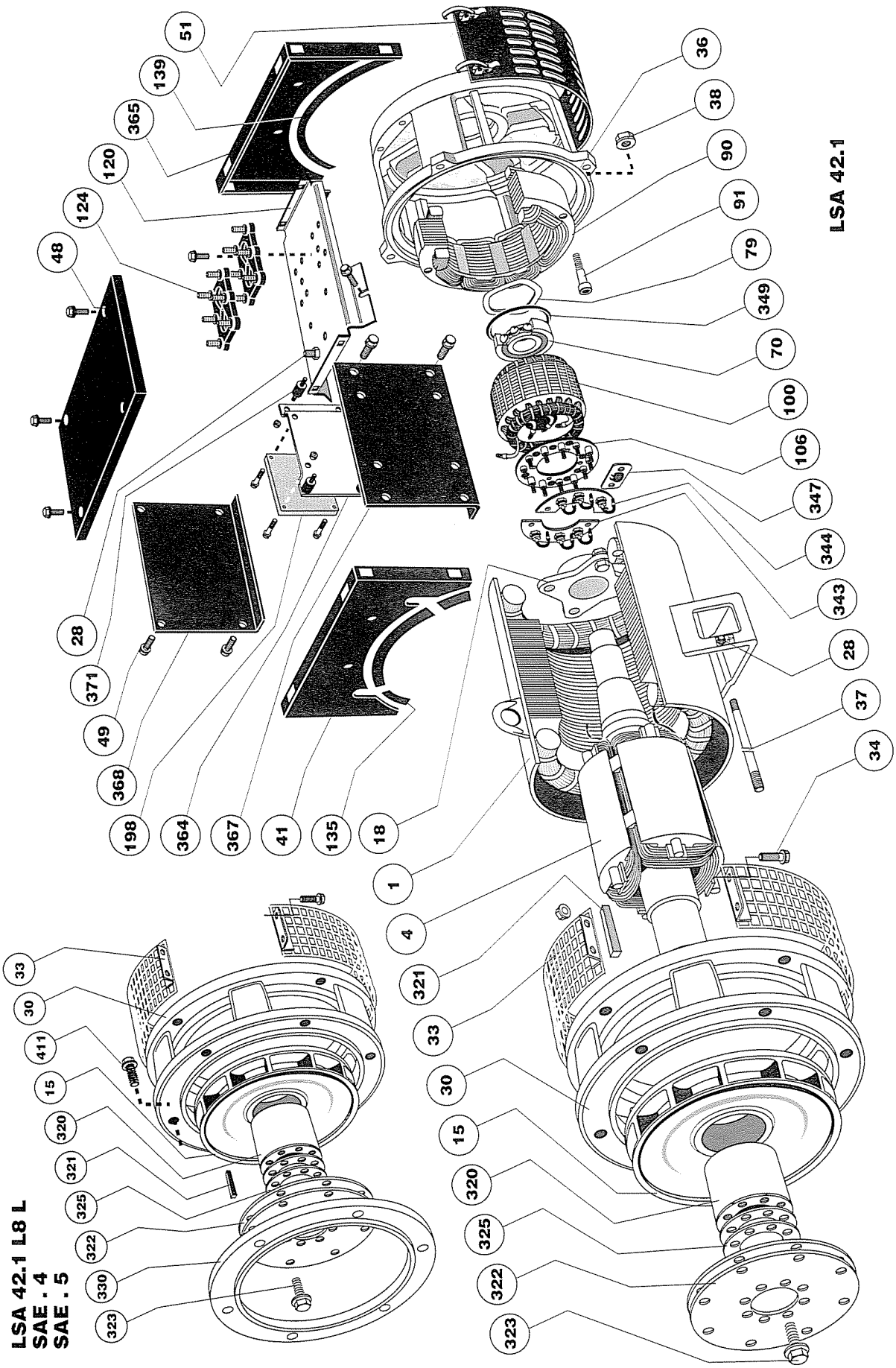

Alternateur
LSA 42.1 - 4P

Alternator
LSA 42.1 - 4P

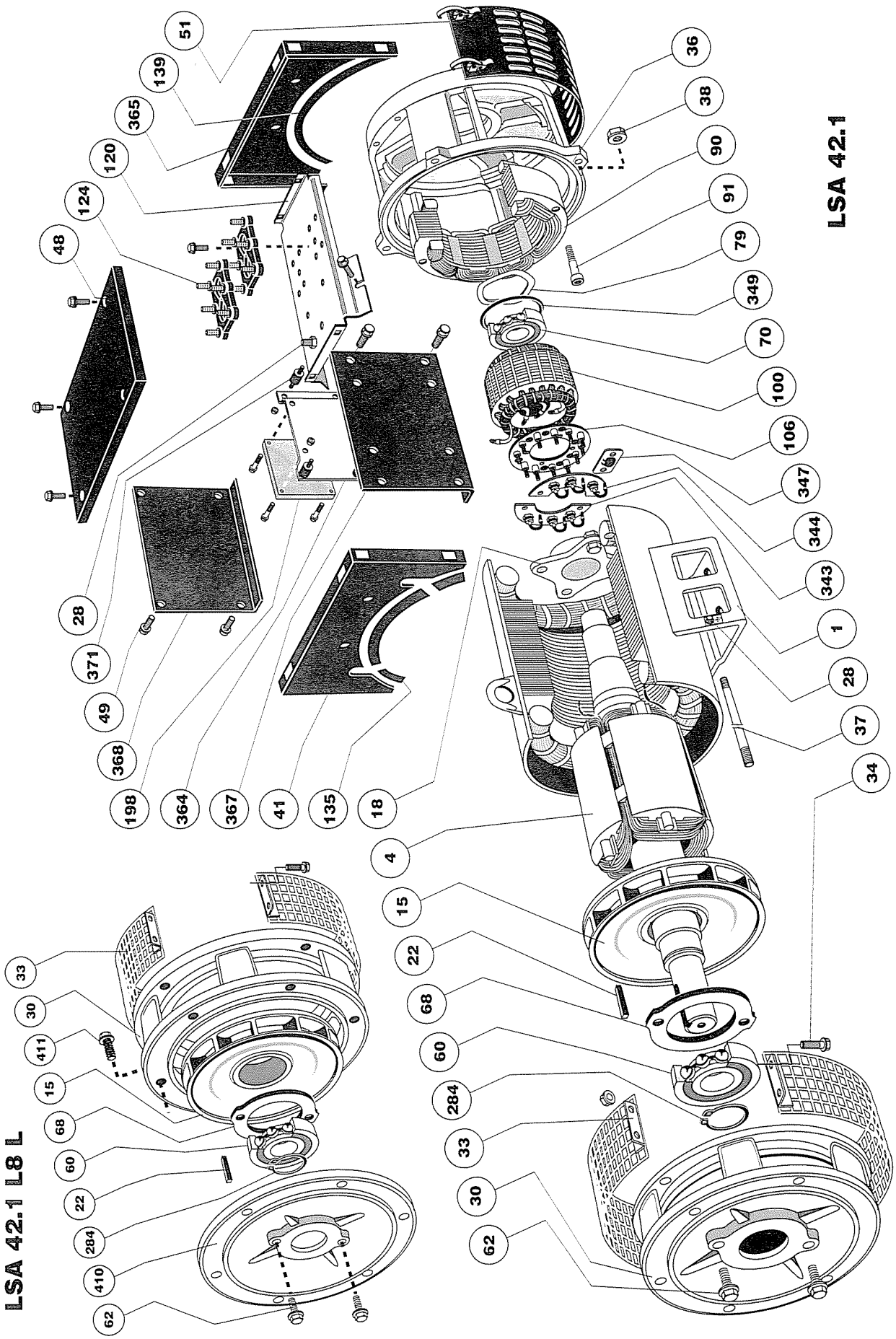

Alternateur
LSA 44.1 - 4P

Alternator
LSA 44.1 - 4P

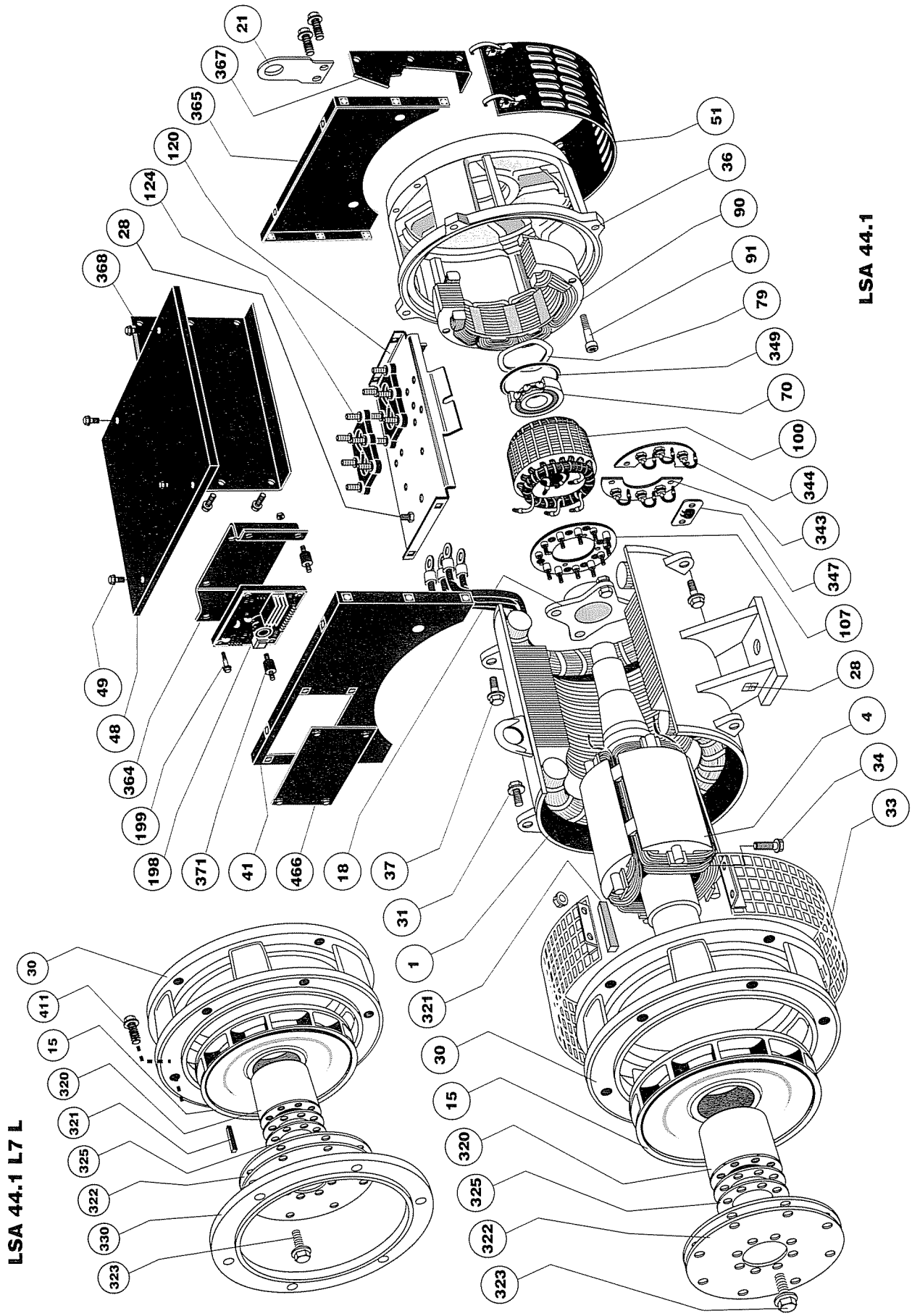

Katolight Service - Master Repair Manual - Page 266

Alternateur
LSA 44.1 - 4P

Alternator
LSA 44.1 - 4P

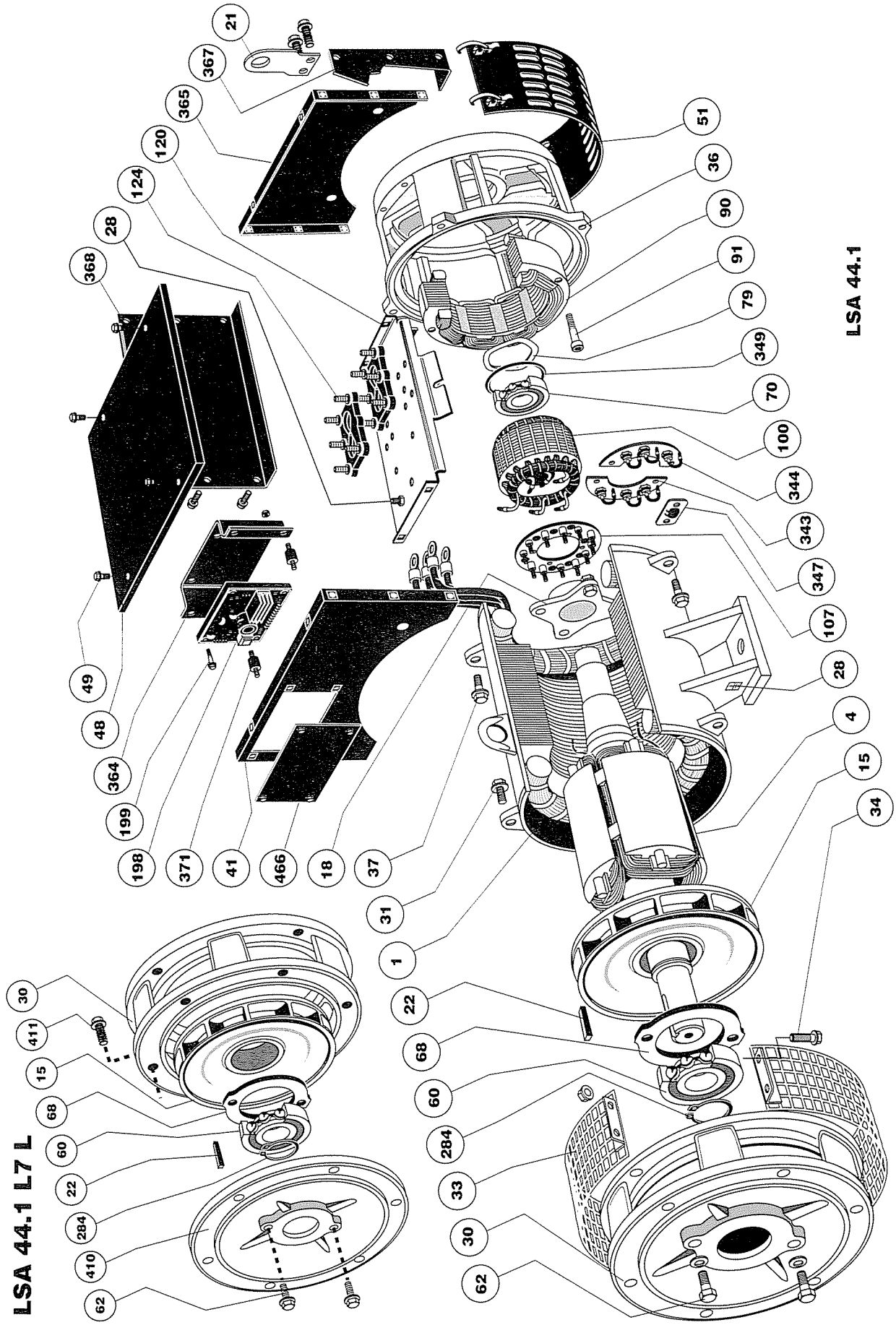

LEROY® SOMER

MOTEURS LEROY-SOMER 16015 ANGOULEME CEDEX-FRANCE

ADRESSE A CONTACTER :

Imprimerie MOTEURS LEROY-SOMER
RC ANGOULEME B 671 820 223

KATOLIGHT WINDING INFORMATION
KL SERIES PTO GENERATORS

SINGLE PHASE MODELS

MODEL	EXCITER RESISTANCE		GENERATOR RESISTANCE		EXCITER NO LOAD VOLTAGE
	STATOR	ROTOR	STATOR	ROTOR	VDC
KLSI-25	23.5	.120	.0695	.750	11.8
KLM1-40	23.5	.120	.0695	.750	11.8
KLM1-50	23.5	.120	.0695	.750	11.8
KLM1-60	23.5	.120	.0695	.750	11.8
KLM1-75	23.5	.120	.0191	1.20	17.O
KLM1-100	23.5	.120	.0191	1.20	17.0

THREE PHASE MODELS

MODEL	EXCITER RESISTANCE		GENERATOR RESISTANCE		EXCITER NO LOAD VOLTAGE
	STATOR	ROTOR	STATOR	ROTOR	VDC
KLM3-45	23.5	.120	.381	.750	11.8
KLM3-55	23.5	.120	.264	.810	12.5
KLM3-65	23.5	.120	.181	.990	14.1
KLM3-85	23.5	.120	.138	1.05	12.2
KLM3-105	23.5	.120	.138	1.05	12.2
KLM3-135	23.5	.120	.0692	1.37	12.2



P.T.O. Driven Alternator

Owner & Operator Manual

Dependable Power Solutions . . . It's All We Do!

100 Power Drive P.O. Box 3229 Mankato, MN 56002-3229
Phone 507.625.7973 Fax 507.625.2968 Toll Free 800.325.5450 www.katolight.com

CAUTION:

Please read and understand the contents of this Owner & Operator Manual completely prior to operating your PTO Driven Alternator.

Failure to do so could result in serious personal injuries, damage to property or damage to alternator.

Save This Warranty Record

Katolight Model No._____

Serial No._____

Date Purchased_____

Purchased From_____

_____

WHEN ORDERING PARTS OR ASKING FOR INFORMATION
ALWAYS GIVE A MODEL AND SERIAL NUMBER.

KATOLIGHT CORPORATION
100 Power Drive / PO Box 3229, Mankato, MN 56002-3229
Phone: 507-625-7973 / Fax: 507-625-2247
www.katolight.com

Cut on dotted line. Fill out warranty validation. Fold in half and secure with a piece of tape. Mail.

BUSINESS REPLY MAIL
FIRST-CLASS MAIL PERMIT NO. 197 MANKATO, MN

POSTAGE WILL BE PAID BY ADDRESSEE

Katolight Corporation
100 Power Drive
PO Box 3229
Mankato, MN 56002-3229

NO POSTAGE
NECESSARY
IF MAILED IN THE
UNITED STATES

Five Year PTO Driven Alternator Standby Limited Warranty

Your Katolight Product has been manufactured and inspected with care by experienced craftspeople. If you are the original consumer, Katolight Corporation warrants, for the period indicated below, each product to be free from defects in materials and workmanship. Repair, replacement or appropriate adjustment at Katolight Corporation's option will be furnished if the product, upon Katolight Corporation's inspection, is properly installed, maintained and operated in accordance with Katolight Corporation instruction manuals. This warranty does not apply to malfunctions caused by damage, unreasonable use, misuse, repair or service by unauthorized persons, or normal wear and tear.

KATOLIGHT PRODUCT PERIOD OF WARRANTY: PTO Driven Alternator complete with Gear Box: Five (5) years parts, site and / or shop labor for the first two (2) years from date of purchase. Accessories: One (1) year parts and site or shop labor form date of purchase.

For a description of accessories and exclusions from this limited warranty, review the listings on the reverse side of this document.

TO OBTAIN WARRANTY SERVICE: Contact your nearest Katolight Service Representative by calling or writing Katolight Corporation.
Attention: Service Department.
Phone: (507) 625-7973 / Fax: (507) 625-2247 / www.katolight.com

Katolight shall not be liable for any claim greater in amount than the purchase price of the product, in respect of which such claim is made, and in no event shall Katolight be liable for any special, indirect or consequential damages.

THERE ARE NO EXPRESS WARRANTIES OTHER THAN THOSE DESCRIBED HEREIN. NO WARRANTIES SHALL BE IMPLIED OR OTHERWISE CREATED UNDER THE UNIFORM COMMERCIAL CODE, INCLUDING BUT NOT LIMITED TO A WARRANTY OF MERCHANTABILITY, AND A WARRANTY OF FITNESS FOR A PARTICULAR PURPOSE.

State laws regarding rights of consumers may vary from state to state.

1. The following items are among those that are not considered nor will they be covered under the existing warranty program.
   a. Normal maintenance costs.
   b. Non-Katolight replacement part(s) will void the entire limited warranty.
   c. Products that are modified in any form without the written consent of Katolight will void the entire limited warranty.
   d. Shipping damage of any type. All equipment is shipped F.O.B. factory and is consigned to the carrier once loaded for shipment. It is the responsibility of the receiver to sign and note any damage to the equipment and a freight damage claim filed by the receiver.
   e. Any installation errors or damage of the equipment when shipped as ordered.
   f. Any overtime labor to make repairs under warranty.
   g. Any special access fees required to gain access to Katolight equipment not limited to but including any training or safety policy requirements to gain access.
   h. Additional costs associated with inaccessible installations, including removal and reinstallation of the generator.
   i. Rental equipment used during warranty work such as generators, rigging equipment such as a crane or boom truck, tractors, load banks and special testing above factory requirements, etc.
   j. Misuse or abuse including installation and thereafter.
   k. Normal wear and tear, maintenance and consumable items that are not required as part of a warranty repair. Consumable items include but are not limited to gear lube and fuses.
   l. Acts of nature such as lightning, wind, flood, or earthquake.
   m. Any damage due to situations beyond the control of the manufacturing of the product or workmanship of the product.
   n. Installation or operation outside the guidelines as stated in the Installation Guide and Owners Manual.
   o. Misapplication of the equipment such as usage outside the original design parameters as stated on the nameplate of the equipment.
   p. Shaft or spline damage caused by improper shaft alignment.
   q. Damage from improper storage when not in use.
   r. Any repair labor time that is determined to be excessive, e.g., two or more people performing a one-person job.
   s. Any expenses associated with investigating performance complaints in which no defect is found.
   t. Any associated costs for replacing components that are found not to be defective.

2. The aforementioned is a representation of things not covered by the standard "**LIMITED WARRANTY".** If there are questions as to warranty coverage it is advisable to contact the factory in advance of filing a claim.

3. The accessories that are limited to one (1) year parts and labor include but are not limited to:
   a. Tap changing switches
   b. Circuit Breakers
   c. Cords and receptacles.
   d. Trailer
   e. PTO Shaft
   f. Manual Transfer Switches

Rev:20030508

IMPORTANT WARRANTY VALIDATION

This card must be filled out and returned within 10 days of purchase.

Katolight Model No._____ Serial No._____

Customer/Owner Name:_____

Address_____

County_____ City_____

State_____ Zip_____

E-Mail:_____ Phone:_____

I heard about Katolight Standby Power form:

☐ Friend ☐ Radio ☐ Newspaper

☐ Magazine ☐ Farm Show ☐ Other_____

Purchased from: (Dealer Name)_____

City_____ State_____ Zip_____

Date Purchased:_____

I will use my Katolight unit in the following applications:

☐ General Farm ☐ Dairy Farm ☐ Beef Farm

☐ Hog Farm ☐ Poultry Farm ☐ Hatchery

☐ Household ☐ Other_____

OPERATING INSTRUCTIONS AND SERVICE INFORMATION

For KATOLIGHT KLM SERIES

PTO Driven Alternators

MODELS

1-Phase KLM1-25, KLM1-40, KLM1-50, KLM1-60, KLM1-75, KLM1-100
3-Phase KLM3-45, KLM3-55, KLM3-65, KLM3-85, KLM3-105, KLM3-135

Read this book before operating the alternator and save for future reference.

Write the Model number, Type number and Serial number of the alternator in the spaces below. Be sure to give these numbers when ordering parts or corresponding about the alternator.

Alternator Model:

_____

Serial Number:

_____

KATOLIGHT CORPORATION
100 Power Drive, PO Box 3229
Mankato, MN 56002-3299
Phone: (507) 625-7973 / Fax: (507) 625-2968
www.katolight.com

Rev. 20040331

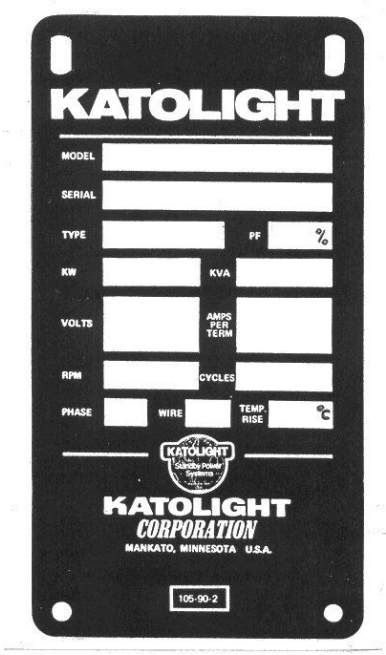

ALTERNATOR DATA

The alternators described in this manual are 1800 RPM revolving field brushless type with Automatic Voltage Regulation. Output voltage may be varied by turning the voltage adjust potentiometer.

Standard equipment includes: Speed Monitor Light, Automatic Voltage Regulator, Brushless Revolving Field Type Alternator, Mainline Circuit Breaker, 15 Amp 120 Volt 3 Wire Duplex Receptacle, 50 Amp 240 Volt 4 Wire Receptacle, Full Load Connector, PTO / Gearbox, Safety Shield, Lifting Eyes, Helical Gears, Mounting Base, Gear Lube, Grounding Terminal, 1800 RPM Slow Speed, Rodent Screen & Drip Proof Design.

3-Phase
Model Selection Chart

Model No.	KVA @ .8pf	Momentary Surge Watts	Minimum Required HP	Circuit Breaker Amps			Phase	Wire	Approximate Wt.	
				120/208	120/240	277/480			Net Lbs.	Ship Lbs.
KLM3-45	56,250	135,000	72	150	150	70	3	12	450	550
KLM3-55	68,750	165,000	85	200	175	80	3	12	735	835
KLM3-65	81,250	195,000	100	225	200	100	3	12	760	860
KLM3-85	106,250	255,000	131	300	250	125	3	12	780	880
KLM3-105	315,000	315,000	160	350	300	150	3	12	930	1030
KLM3-135	405,000	405,000	202	450	400	200	3	12	1080	1180

1-Phase
Model Selection Chart

Model No.	Watts	Momentary Surge Watts	Minimum Required HP	Volts	C.B Amps	Phase	Wire	Approximate Wt.	
								Net Lbs.	Ship Lbs.
KLM1-25	25,000	75,000	35	120/240	100	1	3	450	550
KLM1-40	40,000	120,000	65	120/240	175	1	3	735	835
KLM1-50	50,000	150,000	78	120/240	200	1	3	760	860
KLM1-60	60,000	180,000	92	120/240	250	1	3	780	880
KLM1-75	75,000	225,000	113	120/240	300	1	3	930	1030
KLM1-100	100,000	300,000	151	120/240	400	1	3	1080	1180

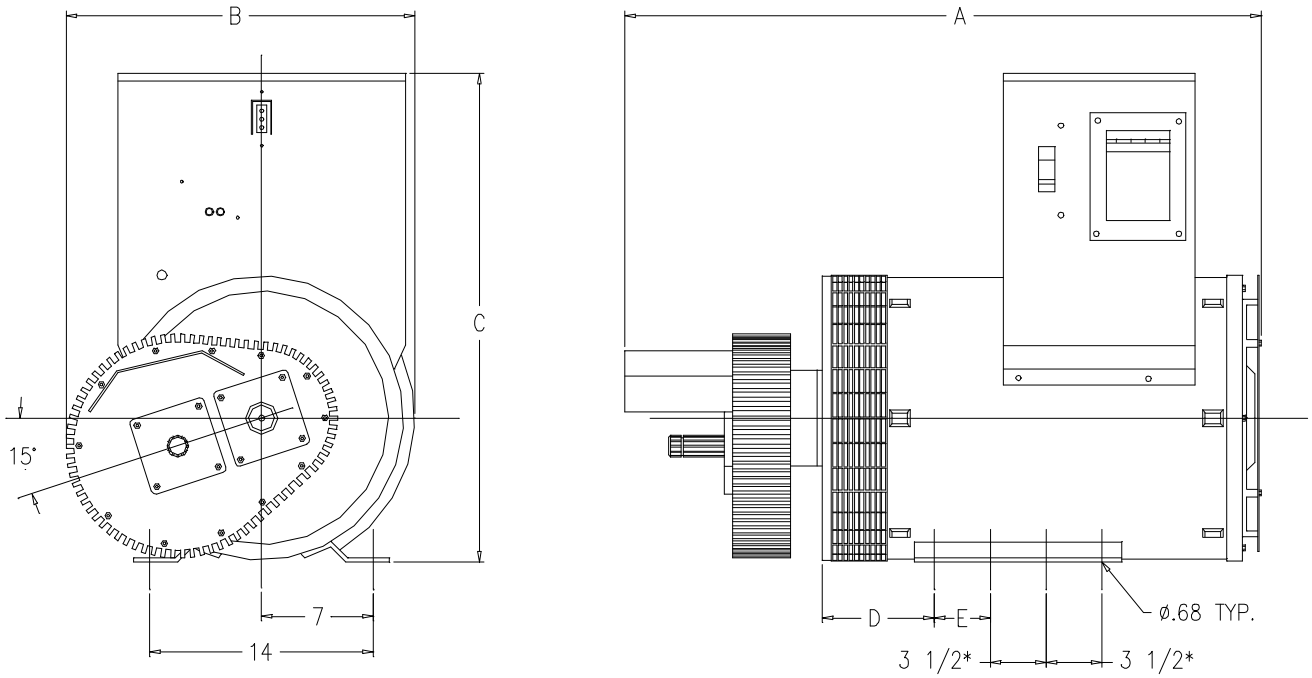

Model No.	A	B	C	D	E	Approx. Net lbs.	Approx. Ship lbs.	Power Shaft Weight	Trailer Weight
KLM1-40	38 11/16	22 9/16	29 7/8	7 13/16	3 1/2	735	835	45	235
KLM1-50	38 11/16	22 9/16	29 7/8	7 13/16	3 1/2	760	860	45	235
KLM1-60	38 11/16	22 9/16	29 7/8	7 13/16	3 1/2	780	880	45	235
KLM1-75	42 5/16	22 9/16	29 7/8	7 13/16	3 1/2	930	1030	45	235
KLM1-100	45 7/16	22 9/16	33 7/8	11 5/16	3 1/2	1080	1180	48	295
3-PHASE									
KLM3-45	38 11/16	22 9/16	29 7/8	7 13/16	3 1/2	735	835	45	235
KLM3-55	38 11/16	22 9/16	29 7/8	7 13/16	3 1/2	755	855	45	235
KLM3-65	38 11/16	22 9/16	29 7/8	7 13/16	3 1/2	785	885	45	235
KLM3-85	42 5/16	22 9/16	33 7/8	7 13/16	3 1/2	915	1015	45	235
KLM3-105	42 5/16	22 9/16	33 7/8	7 13/16	3 1/2	945	1045	45	295
KLM3-135	45 7/16	22 9/16	33 7/8	7 13/16	3 1/2	1220	1320	63	295

Model No.	A	B	C	Approx. Net lbs.	Approx. Ship lbs.	Power Shaft Weight	Trailer Weight
KLM1-25	32 53/64	16 45/64	24 9/32	450	550	45	235

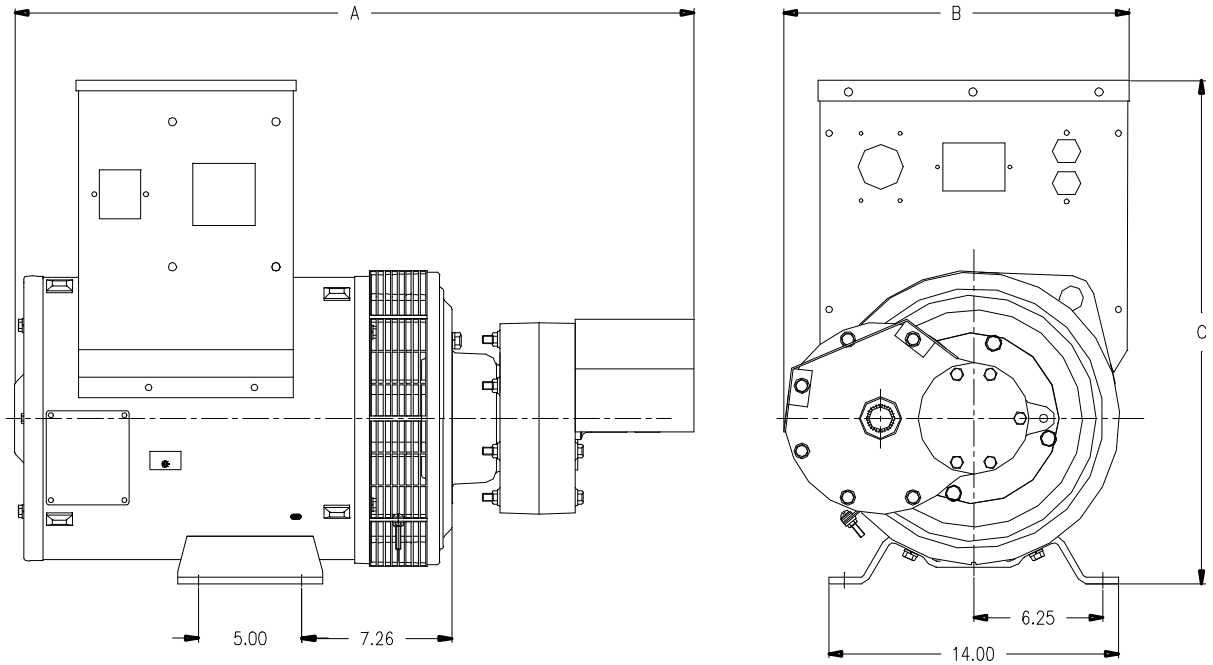

TABLE OF CONTENTS

ALTERNATOR DATA 3

INTRODUCTION 6

DETERMINING YOUR SPECIFIC LOAD 6

HOW ELECTRIC MOTORS ARE CLASSIFIED, AND WHAT THEIR RATINGS MEAN 6

INSTALLING THE ALTERNATOR 7

- Mounting the alternator 7
- Aligning alternator with tractor power take-off 7
- Connecting alternator to load 7
- Gearbox lubrication 8
- Before starting 8

OPERATING THE ALTERNATOR 8

- Verify Speed Light Operation 9
- Checking alternator output voltage 9
- Voltage regulator function 9
- Voltage regulator replacement 9
- Exciter field voltage 9

ELECTRICAL SERVICE AND MAINTENANCE 9

- Testing the rotating rectifier 9
- Replacement of diodes 10
- Replacement of the rectifier assembly 10
- Restoring residual magnetism 10

MECHANICAL SERVICE AND MAINTENANCE 11

- Cleaning 11
- Replacing bearings 11
- Alternator disassembly and assembly 11

LUBRICATON 11

- Gearbox 11
- PTO Shaft 11

AVR CUTAWAY DRAWING 12

LOCATING TROUBLE 13

- Trouble shooting chart 13
- Parts Ordering Instructions 13

CRIMPING 20

CONNECTOR CHECKLIST 24

TERMINOLOGY 25

INTRODUCTION

Before any Katolight PTO Driven Alternator is shipped from the factory the alternator is inspected and tested for performance. All units are load tested prior to shipment. Carefully unpack the unit and visually inspect it for damage. If it is damaged, check with the transportation carrier for adjustment of the damage. Before placing the unit in operation, check the gearbox gear lube level. If empty, or below the level check plug and fill with EP90 weight gear oil to check plug level.

If upon installation a new alternator does not work properly, check all electrical connections and the alternator speed before concluding the alternator is defective.

DETERMINING YOUR SPECIFIC LOAD

The load can be determined by adding the wattage requirements for each light, appliance and motor which will be operated by the unit. The following chart lists approximate running or operating watts required for various electrical appliances.

TABLE B
APPROXIMATE WATTS REQUIRED
FOR ELECTRICAL APPLIANCES

APPLIANCE	WATTS
Lamp Bulbs	See wattage on bulbs
Radio	40 - 200
Television	150 - 300
Vacuum Cleaner	200 - 750
Automatic Washer	400
Air Conditioner (3/4 Ton)	1,250
Refrigerator	325
Food Freezer	300
Furnace (Oil)	700
Deep Well Pump	2,000
Electric Range	600 - 10,000
Hot Plate (per burner)	600 - 1,200
Toaster	600 - 1,130
Water Heater	1,500 - 5,000
Glow Heater	600 - 1,200
Heating Pad	40 - 80
Sun Lamp	250 - 1,000
Flat Iron	600 - 1,200
Laundry Dryer	4,750
Electric Heat System	5,000 - 20,000

Check all appliance nameplates for exact ratings.

HOW ELECTRIC MOTORS ARE CLASSIFIED, AND WHAT THEIR RATINGS MEAN

Electric motors require more current (amperes) starting than running. Split-phase motors are difficult to start and require 5 to 10 times as much current to start as to run, dependent on the NEMA code letter rating. Capacitor motors require 2 to 4 times as much current to start as to run. Repulsion Start Induction Motors require 1½ to 2½ times as much current to start as to run.

The chart below shows the approximate current required to run and start 120 volt, 60 cycle, NEMA Code F induction motors under average load conditions.

Horse Power	Running Amperes	Starting Amperes
1/6	4.4	7 to 15
¼	5.8	10 to 15
1/3	7.2	15 to 25
1/2	9.8	20 to 30
1	16.0	40 to 50

The NEMA code letter assigned by the motor manufacturer will govern the starting (locked rotor) current surge. The chart below shows the NEMA code letters and their corresponding range of multipliers for the starting current requirement in amperes.

NEMA Code letter Motor Rating	Kilovolt-Amperes per Horsepower (Locked Rotor)
A	0 - 3.14
B	3.15 - 3.54
C	3.55 - 3.99
D	4.0 - 4.49
E	4.5 - 4.99
F	5.0 - 5.59
G	5.6 - 6.29
H	6.3 - 7.09
J	7.1 - 7.99
K	8.0 - 8.99
L	9.0 - 9.99
M	10.0 - 11.19
N	11.2 - 12.49
P	12.5 - 13.99
R	14.0 - 15.99
S	16.0 - 17.99
T	18.0 - 19.99
U	20.0 - 22.39
V	22.4 - and up

Here is a formula for amps:

The starting current for 1 h.p. Code F 230 V.A.C.

1 x 5.6 = 5.6 KVA inrush

$$\text{Amp} = \frac{\text{KVA}}{\text{Volts}} = \frac{5.6 \times 10^3}{230} = 24.3 \text{ amp inrush or starting}$$

Because the heavy surge of current required for starting motors is needed only for an instant, the alternator will not be damaged if it can bring the motor up to speed in a few seconds. If difficulty is experienced in starting motors, turn off all other electrical loads and, if possible, reduce the load on the electric motor.

NOTE

IN APPLICATIONS WHERE SEVERAL MOTORS ARE TO BE STARTED, EXCESSIVE OVERLOAD MAY BE AVOIDED BY STARTING THEM ONE AT A TIME. START THE MOTOR THAT REQUIRES THE HIGHEST RUNNING AND STARTING CURRENT FIRST.

INSTALLING THE ALTERNATOR

Provide sufficient ventilation. Do not operate tractor driven alternator in a non-ventilated area. Do, however, provide protection from heavy snow or dust which may plug air cleaners and ventilation openings.

For best operation, the following factors should be taken into consideration:

1. Dirt - Dust particles and dirt can cause excessive wear, not only to bearings but to all rotating parts of the alternator.

2. Moist or wet conditions are hazardous. In addition, all electrical equipment should be protected from excessive moisture which deteriorates insulation and causes short circuits.

The generator must be stored properly. Protect it from moisture and dirt. If the unit is to be left in the open, it should be covered whenever it is not in use. All ventilating openings should be cleaned periodically and kept clear and open while operating.

MOUNTING THE ALTERNATOR

The alternator must be solidly bolted to a foundation, platform or bed of a trailer. The feet on the alternator must contact the foundation or trailer bed. If space is left between a mounting foot and the foundation or trailer, shim it to take up the space and then insert and tighten bolts.

ALIGNING ALTERNATOR WITH TRACTOR POWER TAKE-OFF

The double universal joint construction of the power take-off drive shaft allows for considerable angular misalignment between the gearbox and the tractor power take-off shaft. As shown in Figure 1 the angular misalignment of the universal joints, if at all possible, should not be more than 15 degrees. If the power take-off drive shaft is taken apart, make certain the drive shaft universal joint knuckles are in time with one another as shown in Figure 2. If the drive shaft universal joint knuckles are not in time, chattering will occur which will cause a flicker in the electrical output. The same flicker will also occur if the angle of the drive shaft from the alternator to the tractor power take-off is more than 15 degrees. Make certain the power take-off shaft lock pin is properly engaged and the removable power take-off shaft shields are installed before operating the unit.

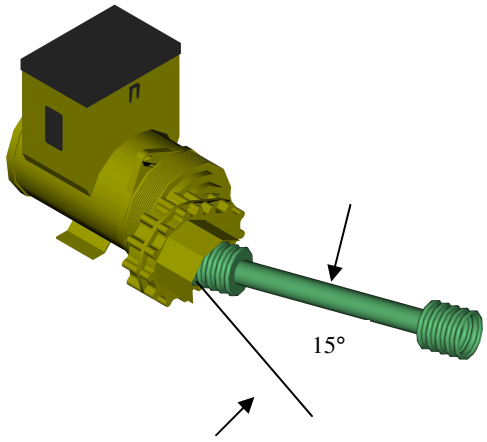

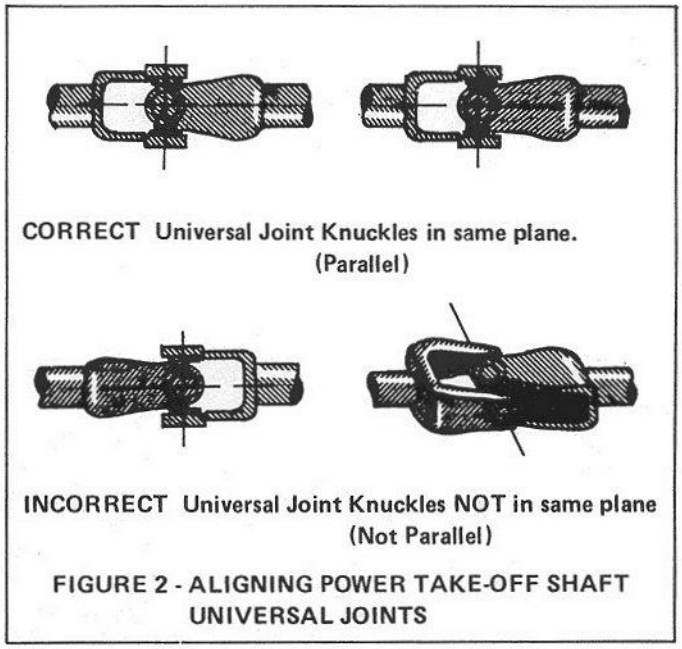

FIGURE 2 - ALIGNING POWER TAKE-OFF SHAFT UNIVERSAL JOINTS

CONNECTING ALTERNATOR TO LOAD

* Load can be taken from receptacles or by connecting the Alternator into an existing service through the full load connector plug.
* Load taken from receptacles should not exceed the respective receptacle rating and should never exceed the alternator rating. The 120 VAC duplex receptacle is rated for 15 amps and the 240 VAC receptacle is rated at 50 amps. Both receptacles and the full load plug are protected by individual overload protection circuit breakers.

* Load taken from the full load cord set should not exceed the full load rating of the alternator.
* When the Alternator is connected into an existing service normally supplied by commercial power an approved TRANSFER SWITCH MUST BE USED. Check your local electrical code requirements before you make any connections.

INSTALLING GROUND WIRE

Ground the Alternator frame and Neutral leg to a solid earth ground. Follow local electrical code regulations enforced in your area with regard to neutral bonding to ground requirements. The ground wire should not be smaller than the load line. A ground stud terminal is supplied for this connection.

GEARBOX LUBRICATION

Check oil level. Fill with EP90 Gear oil if necessary. Maintain oil level slightly below check plug. DO NOT OVERFILL. Overfilling will cause heating and seal damage.

LAST CHECK BEFORE STARTING THE ALTERNATOR
Before starting the alternator for the first time, the unit should be inspected as follows:

1. Check electrical connections to load. (Refer to the electrical connection diagrams.)

2. Using the gearbox splined input shaft, turn the alternator manually and visually inspect for foreign objects that may have gotten into the unit during shipping and/or crating.

3. Check gearbox oil level.

4. Check alignment of PTO shaft.

5. Make sure all protective covers and guards are in place.

6. Make sure alternator input speed matches tractor pto speed.

OPERATING THE ALTERNATOR

1. Open the mainline circuit breaker or make sure the transfer switch is **NOT** in the emergency position. Starting the alternator with the load applied is not recommended.

2. When the alternator is used, **ALWAYS** start the tractor with the engine idling, engage the power take-off and let the clutch out slowly. Caution must be taken with electrically engaged power take-off drives. If engaged at higher than the idle or rated speeds, damage to the alternator or alternator gearbox will occur. Electrically engaged PTOs **MUST** be engaged at idle (approximately 800 RPM). Make certain the gearbox and alternator rotor turn freely.

3. Make certain unit is at rated speed and producing desired voltage. Procedures for reading speed monitor light and voltage are contained in the following paragraphs. Speed may dip slightly when load is applied and therefore, tractor throttle setting with full load applied may have to be increased slightly from no load setting. The load can now be applied to the alternator by closing the mainline circuit breaker or by transferring the transfer switch into the emergency position.

4. Speed Monitor. When the alternator is being driven at proper speed (1800 RPM), the Green light on the Speed Monitor will come on. At 1800 RPM, the alternator puts out 60 Hertz (60 cycles per second). The Green light goes off and the upper or lower red light comes on if the speed is too high or too low. The Green light stays on as long as the alternator output is between 59 and 61 Hertz. Motors will run satisfactorily if power frequency is within 5% of their nameplate value, as far as torque and heating are concerned. But note that on induction motors and synchronous motors, speed varies in proportion to frequency, hence any equipment that depends on frequency for timing will not be accurate if alternator speed is off.

5. Using the Speed Monitor.

a. When starting up the PTO Alternator, watch the Speed Monitor.

b. While the unit is coming up to speed, the bottom RED light will come on; continue to increase speed until the Green light comes on.

c. After load is applied, it may be necessary to readjust the speed to the green light position by increasing the tractor throttle.

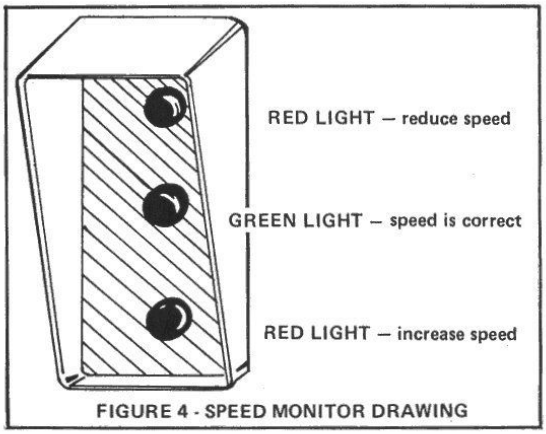

Figure 3

d. Check the Speed Monitor periodically while the unit is in operation, especially after adding or taking off load. If the top red light comes on, reduce speed; if the bottom red light comes on, increase speed. How to Verify Speed Light Operation.

Plug a standard analog wall clock into the 120-volt receptacle of the alternator. Run the generator and compare the second hand sweep around the face of the clock to the second hand of a wristwatch or stop watch. When the alternator is at 60 Hz the clock and wristwatch should match. If the clock runs faster than the wristwatch the alternator speed is too fast. If the clock runs slower than the wristwatch the alternator speed is too slow.

Speed Chart
61Hz = Clock will gain 1 second per minute of operation or 1 minute per hour of operation

59 Hz = Clock will lose 1 second per minute of operation or 1 minute per hour of operation.

6. Shutting the alternator down. Caution must be taken when disengaging the PTO driven alternator. To disconnect the electrical load prior to shutting down the alternator, open the mainline circuit breaker or make sure the transfer switch is **NOT** in the emergency position. Bring the tractor from rated speed to idle (approximately 800 RPM) before disengaging. Failure to follow this procedure could result in damage to alternator or alternator gearbox.

CAUTION:

DO NOT OPERATE TRACTOR IN NON-VENTILATED AREA.

STOP TRACTOR BEFORE FILLING WITH FUEL.

IN APPLICATIONS WHERE ALTERNATOR IS CONNECTED TO SERVICE WHICH IS NORMALLY SUPPLIED BY COMMERCIAL POWER, INSTALL A TRANSFER SWITCH. THIS PRECAUTION PROTECTS PERSONNEL SERVICING COMMERCIAL POWER LINES.

AVOID CONTACT WITH ALTERNATOR VOLTAGE. WHENEVER MAKING ELECTRICAL CONNECTIONS OR REPAIRING ALTERNATOR, FIRST STOP UNIT.

CHECKING ALTERNATOR OUTPUT VOLTAGE

To check the voltage, use a good quality AC Voltmeter - inexpensive meters often have an error of 10% or more. For best results, choose a meter that will indicate the desired voltage at about 3/4 of full scale, For example: to read 240 volts AC, use a 0 to 300 volt AC meter.

For personal safety, connect the meter to the generator before starting the engine.

WARNING: DANGEROUS VOLTAGES ARE PRESENT IN THIS UNIT!

VOLTAGE REGULATOR FUNCTION

Unless the alternator's output voltage is kept within narrow limits, equipment that is powered by it may not operate properly and may be damaged. Motors are usually designed to run satisfactorily only when the voltage at their terminals is within 10% of the nameplate value. In particular, motors will have their torque reduced and will overheat if they are operated at too low a voltage. If the voltage is too high it will cause some devices to burn out.

The purpose of the voltage regulator is to keep the alternator voltage at very near its set value. It does this by supplying the proper amount of direct current to the exciter field, according to the needs of the alternator. An increase in load normally causes the alternator voltage to decrease; the regulator senses this drop in voltage and increases the exciter field current just enough to bring the voltage back up. A decrease in load has the opposite effect - it causes the alternator voltage to go up; the voltage regulator senses this and reduces exciter field current so as to bring the alternator voltage back down to the set value.

The voltage regulator has an adjustment for setting the alternator voltage. This voltage is set at the factory and should require no further adjustment. However, should conditions exist which cause voltage output to change, voltage adjustment can be made with a screwdriver. Refer to the voltage regulator manual for instructions on voltage adjustment, regulator service, etc.

VOLTAGE REGULATOR REPLACEMENT

If the voltage regulator is defective it must be replaced and cannot be repaired. To reconnect properly, refer to the wiring diagram in the installation section. All connections are made at the terminal strip on the regulator.

EXCITER FIELD VOLTAGE

When there is a problem with the alternator, it is often useful to check the Voltage Regulator output to the exciter field. This voltage can be read at terminals F+ and F- on the regulator. The values should be taken from units running at rated speed (1800 rpm) and rated output voltage with NO LOAD. Exciter field voltage will normally be lower at no load than when the alternator is loaded. Note that DC meters are required to measure the exciter field voltage and current. Polarity must be observed.

ELECTRICAL SERVICE AND MAINTENANCE

ROTATING RECTIFIER ASSEMBLY MAINTENANCE AND TEST PROCEDURE

Individual rectifiers, or the complete rectifier assembly can be accessed by removing the end bracket opposite the drive end of the unit. Remove the end bracket to expose the bearing and rotating rectifier assembly for test, assembly or service, Refer to Figure 4.

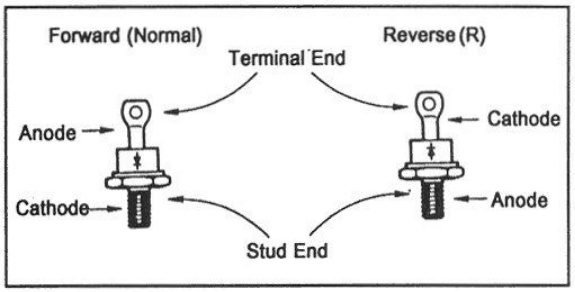

Figure 4

A. Stud type diodes may be tested in the field without unsoldering and removing the load from the diode terminal. Remove the diode load lead terminal lug from its terminal post, and insure that it is not making contact with any adjacent metallic part. An ohmmeter or a battery-light continuity tester may be used to find a short or open condition in the diode. Connect the positive test lead to the anode, and the negative
B. lead to the cathode, take a reading, reverse the test leads and take a reading. These checks should indicate one of three conditions:1. Good diode: Will have a much greater reverse resistance (positive lead on cathode) than forward resistance (negative lead on cathode). Typical reverse resistance will be 30,000 - 300,000 ohms or greater, while typical forward resistance will be less than 10 ohms. The continuity tester will have the light "on" in one direction, and "off"

in the other.

2. Shorted condition: ohmmeter reading will be zero, or very low in both directions. Continuity tester light will be on in both directions.

3. Open condition: ohmmeter will have a maximum (infinity) reading in both directions. Continuity tester light will be dark (off) in both directions.

CONSTANT EXCITATION (12V BATTERY) TEST

THEORY: The generator output voltage is dependent on generator speed, generator design, load, and exciter input current. If the generator speed and exciter input are known, the output voltage at no load can be measured and compared to the design value. Problems can be isolated to either the generator or regulator system by using this test.

TEST PROCEDURE:

1. Shut the generator set down.

2. Connect a voltmeter to the generator output.

3. Disconnect the F1 and F2 leads at the regulator.

4. Connect a 12 volt battery capable of supplying 1 amp to the F1 and F2 leads.

CAUTION: Beware of arcing when connecting leads. Stay clear of battery vents. Escaping hydrogen gas can explode. If hazardous conditions exist - use a suitable switch to connect or disconnect the battery.

5. With no load on the generator, (Main breakers open) run generator at rated speed (1800 rpm - 60 Hz or 1500rpm - 50 Hz).

6. Measure the generator output voltage.

7. Shut generator down.

8. Disconnect battery (see caution - Step 3).

Conclusion: If voltage output is near nominal, the main generator and exciter are operating properly. If voltage output is less than 50% of nominal, the problem is in the generator. Continue testing diodes, surge suppressor, windings.

REPLACEMENT OF DIODES

If a diode tests bad, replace all the diodes, or the complete rectifier assembly. Remove the diode leads to the main rotor terminal posts, along with the plastic lead wire clamps. The individual diodes are "stud type", retained by 1/3-20 hex head nuts and a lock washer. Prior to installing a replacement diode on the heat sink, run a bead of a thermal-electrical contact compound around the base of the diode. The threads should not be coated. Torque the diodes to 27-30 inch-pounds. Do not over tighten.

REPLACEMENT OF THE RECTIFIER ASSEMBLY

Remove the bearing from the main shaft. Disconnect the exciter rotor and main rotor leads. Remove the hold-down screws which secure the rectifier assembly to its mounting. The rectifier assembly is then free for removal.

To replace, reverse the procedure. Check all connections. Always install a new bearing.

RESTORING RESIDUAL MAGNETISM

The cores of the alternator and exciter fields retain a certain amount of magnetism after the power plant has been shut down. This residual magnetism must be present to begin the voltage build-up process when the power plant is started up again. If residual magnetism is lost due to a long idle period or some other cause, it well be necessary to flash the field. This is done by connecting a 12-volt battery across the exciter field for 15 - 30 seconds. Proceed as follows:

1. Disconnect the two exciter field leads from voltage regulator terminals F+ and F-. The field leads should be marked F2 and F1.

2. * Disconnect regulator power leads 3 & 4 from voltage regulator.

3. Connect the negative terminal of a 12 volt battery to lead F1.

4. Connect the positive terminal of the battery to lead F2 for a few seconds.

5. Start the engine and bring the unit up to speed.

6. There should be voltage at the alternator output - up to 200 volts AC line-to-line, more or less. If there is still no voltage, contact your local factory representative.

7. If voltage is now present, shut down the unit, disconnect the battery and connect the exciter field to the voltage regulator, F2 to F+ and F1 to F-.

8. Reconnect power leads 3 & 4.

9. Start up the engine and bring it up to speed; check output voltage.

* Refer to the voltage regulator manual for regulator connections, regulator operation, etc.

MECHANICAL
SERVICE AND MAINTENANCE

CLEANING

Do not permit ventilating ports to become clogged. Clean periodically.

REPLACING BEARINGS

Replacement bearings must be of the same size as originally installed at the factory. These procedures must be followed.

1. If the bearing requires replacement, the alternator endbell must be removed.

2. Replacement must be positioned on the shaft so that bearing inner ring is against the bearing shoulder on the shaft.

3. Bearings should be removed with a puller that applies pressure to the bearing inner ring.

4. Bearings are a press fit on the shaft. Replacement bearing should be heated to +220° to +250° F. in a clean, temperature controlled oven before attempting to install them on the alternator shaft.

5. A replacement bearing should be installed on the shaft while it is hot as described above. A sleeve or pipe that applies pressure to the bearing inner ring may be used to tap the bearing into place on the shaft. The sleeve or pipe should never exert pressure on the bearing outer ring.

ALTERNATOR DISASSEMBLY AND ASSEMBLY

Disassembly of alternator can be accomplished by following these steps.

1. Refer to cutaway drawing for location of parts.

2. Remove bolts securing gear cases to alternator. Carefully remove gear case from shaft. A jaw type puller may be required on older units.

3. Disconnect leads within alternator terminal box. Remove bolts holding terminal box to alternator.

4. Remove bolts holding endbells to alternator frame and stator assembly. Pull endbells.

5. Remove exciter armature by disconnecting leads. (Carefully cut ties holding leads to exciter armature windings).

6. Generator rotor can be removed from fan end without removing fan.

7. Do not remove exciter field from endbell unless it is to be replaced.

8. Do not remove bearings if they do not require replacement.

Assembly of the alternator can be accomplished by following these steps:

1. If new bearings are to be installed refer to preceding paragraphs titled Replacing Bearings.

2. If exciter field assembly was removed from end bell, install exciter field with lead wires toward endbell.

3. Slide alternator rotor into stator assembly.

4. Install endbells.

5. Install terminal box and reconnect wires. Refer to electrical diagrams contained in the Installation Section of this manual.

LUBRICATION

GEARBOX

Check gearbox fluid level at level check plug located in front gearbox case half at approximately an 8:00 position from the splined input shaft. Fluid level should be at thread level when the unit is setting on level. If low, fill with Std #80/90 weight gear lube. Katolight recommends that the PTO Alternator be brought up to full 1800 rpm operating speed at least twice annually to insure gearbox bearing and gear set lubrication.

PTO SHAFT

Grease PTO shaft needle bearings and tubular shaft assembly via grease zerts provided.

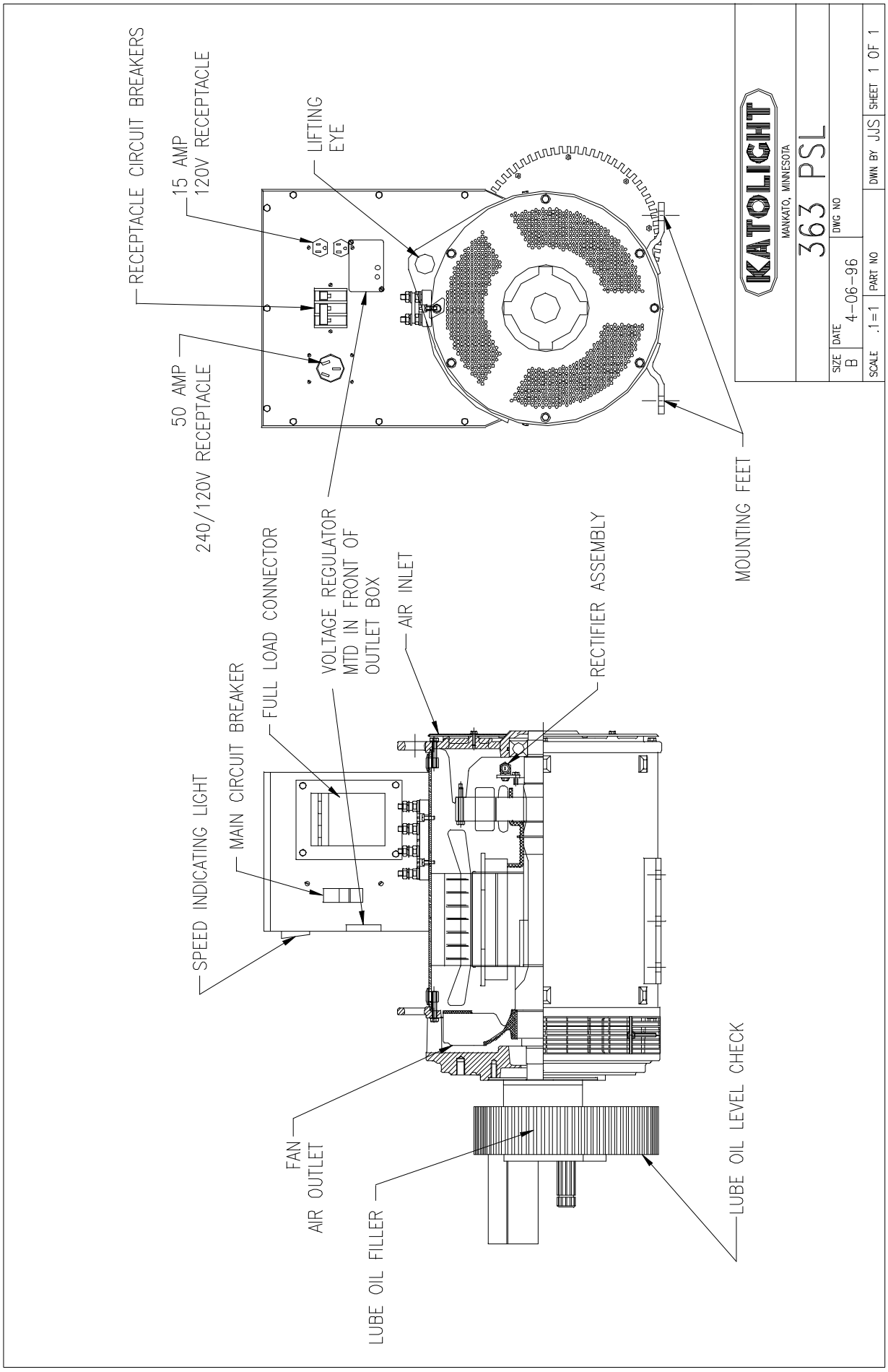
RECEPTACLE CIRCUIT BREAKERS
15 AMP
120V RECEPTACLE
LIFTING
EYE
50 AMP
240/120V RECEPTACLE
MOUNTING FEET
SPEED INDICATING LIGHT
MAIN CIRCUIT BREAKER
FULL LOAD CONNECTOR
VOLTAGE REGULATOR
MTD IN FRONT OF
OUTLET BOX
AIR INLET
RECTIFIER ASSEMBLY
FAN
AIR OUTLET
LUBE OIL FILLER
LUBE OIL LEVEL CHECK
KATOLIGHT
MANKATO, MINNESOTA
363 PSL
SIZE B
DATE 4-06-96
DWG NO
SCALE .1=1
PART NO
DWN BY JJS
SHEET 1 OF 1

LOCATING TROUBLE

If the alternator does not appear to be producing voltage, check the load circuit breakers or fuses. If a circuit breaker is tripped, reduce the load and reset the breaker. If fuses are blown, replace the fuses. A common cause of poor alternator operation is underspeed.

Speed can be easily checked with a hand held frequency meter or tachometer.

The following Troubleshooting Chart lists various symptoms of poor alternator operation, possible causes and means of correcting deficiencies.

TABLE C
TROUBLESHOOTING CHART

SYMPTOM	POSSIBLE CAUSE	POSSIBLE REMEDY
No Output Voltage.	Engine Speed too low.	Increase speed until alternator produces 60 cycles.
	Short Circuit in load.	Disconnect load. Check motors, appliances and load leads for short circuit.
	Open voltage regulator fuse.	Check voltage regulator fuse
	Defective receptacles.	Remove terminal box cover and test with test light.
	Loose terminal connections or shorted lead wires in control box.	Remove terminal box cover. Check terminal connections. Check for bare wires.
	Open fuses or circuit breakers.	Replace fuses. Reset circuit breakers.
	Voltage regulator defective.	Contact KATOLIGHT CORPORATION Sales and Service Office - Mankato, MN.
	Open or short circuited leads.	Remove alternator cover and check exciter field leads. Check leads from exciter armature to rotating rectifiers and alternator field coils. Make certain the tie down lacing holding exciter leads to shaft is securely wrapped and tied before placing unit back in operation.
	Open or short circuited exciter field coils exciter armature windings, alternator field coils or alternator stator windings.	Consult KATOLIGHT CORPORATION Sales and Service Office - Mankato, MN.

TABLE D
TROUBLESHOOTING CHART CONTINUED

SYMPTOM	POSSIBLE CAUSE	POSSIBLE REMEDY
Low Voltage	Engine speed too low.	Increase engine speed until alternator produces 60 cycle output.
	Voltage adjust rheostat not properly adjusted.	Adjust to rating.
	Alternator Overloaded.	Reduce load to rated value. Make certain alternator is not overloaded by unbalanced load.
	Short circuit in load.	Remove load. Check appliances and motors for point of short circuit.
	Defective voltage regulator or rotating rectifiers.	Consult KATOLIGHT CORPORATION Sales and Service Office - Mankato MN if voltage regulator is defective. Test rotating rectifiers.
High Voltage	Voltage adjust rheostat not set correctly.	Adjust to proper voltage.
	Defective voltage regulator.	Contact KATOLIGHT CORPORATION Sales and Service Office - Mankato MN.
Poor Voltage Regulation	Load in excess of alternator rating.	Reduce load. Check nameplate rating.
	Wrong alternator speed or defective regulator.	Correct speed. Replace regulator.
Continuous Voltage Fluctuation	Engine speed not constant.	Engine may not have enough power or engine governor may be worn or improperly adjusted. Set or repair defective governor.
	Defective Regulator.	Adjust voltage stability pot (CW to increase stability) if fails then consult KATOLIGHT CORPORATION Sales and Service Office - Mankato MN.
Vibration & Noise	Defective bearings.	Replace bearings.
	Gearbox dry or overfilled.	Check gearbox oil level.
	Power take-off misalignment excessive or universal joint dry or worn.	Correct defects. Refer to Operation section of this manual for alignment procedures.
	Loose mounting bolts.	Check or tighten as necessary.

PARTS ORDERING INSTRUCTIONS

To avoid errors or delay in filling your parts order:

1. Always give SERIAL NUMBER, and MODEL NUMBER.

2. Give the item part number and description. Give the quantity required of each item. DO NOT ORDER BY REFERENCE NUMBER OR GROUP NUMBER. If an old part cannot be identified return the part POSTAGE PREPAID to your distributor or KATOLIGHT CORPORATION. Write a letter to the same address stating the reason for returning the part.

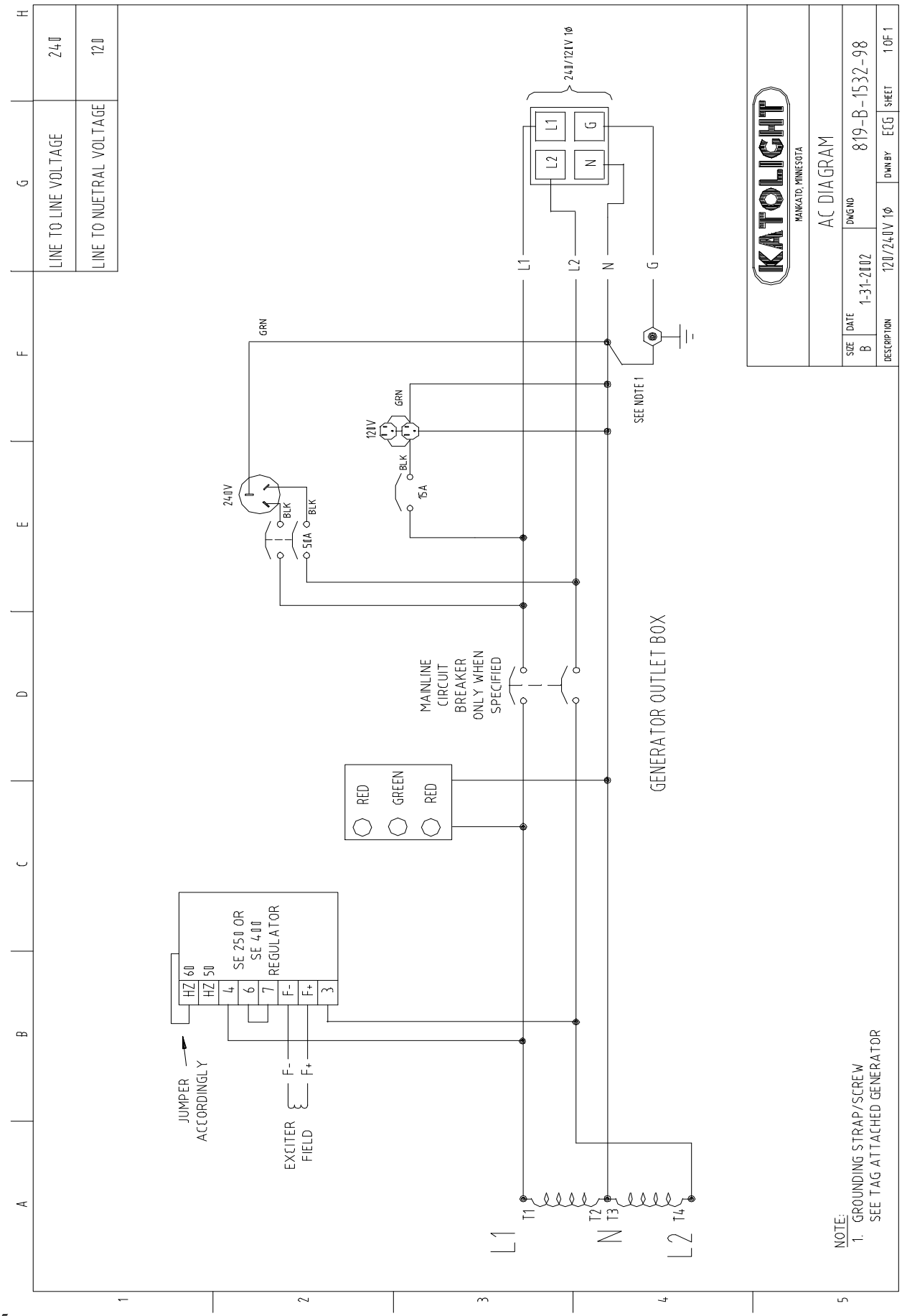
LINE TO LINE VOLTAGE 240
LINE TO NUETRAL VOLTAGE 120
KATOLIGHT
MANKATO, MINNESOTA
AC DIAGRAM
SIZE B
DATE 1-31-2002
DWG NO 819-B-1532-98
DESCRIPTION 120/240V 1Ø
DWN BY ECG
SHEET 1 OF 1
240/120V 1Ø
L1
L2
N
G
GRN
SEE NOTE 1
120V
BLK
15A
240V
BLK
BLK
5AA
MAINLINE CIRCUIT BREAKER ONLY WHEN SPECIFIED
RED
GREEN
RED
GENERATOR OUTLET BOX
SE 250 OR SE 400 REGULATOR
HZ 60
HZ 50
4
6
7
F-
F+
3
JUMPER ACCORDINGLY
EXCITER FIELD
F-
F+
T1
T2
T3
T4
L1
N
L2
NOTE:
1. GROUNDING STRAP/SCREW SEE TAG ATTACHED GENERATOR

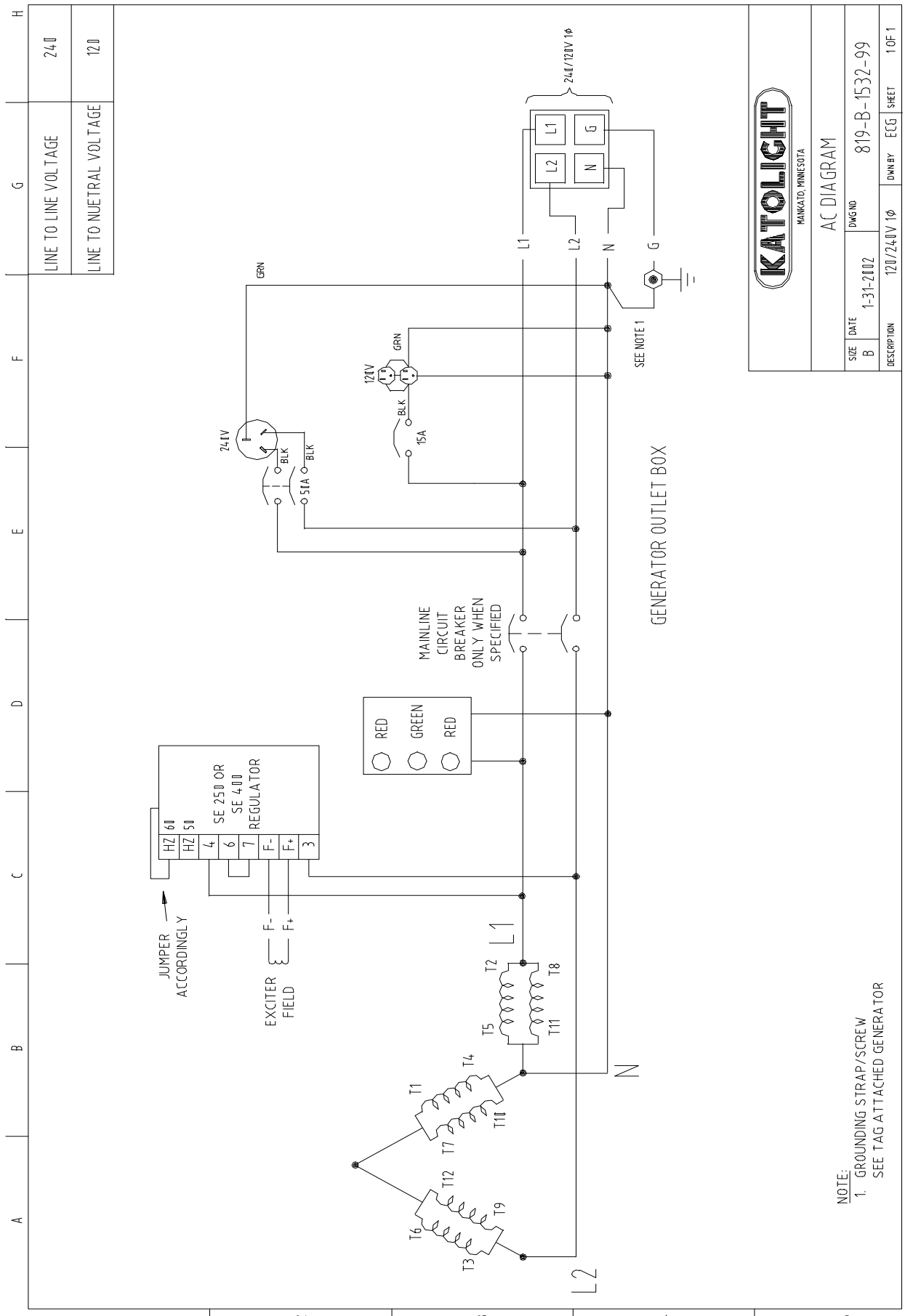
LINE TO LINE VOLTAGE 240
LINE TO NUETRAL VOLTAGE 120
KATOLIGHT
MANKATO, MINNESOTA
AC DIAGRAM
SIZE B
DATE 1-31-2002
DWG NO 819-B-1532-99
DESCRIPTION 120/240V 1Ø
DWN BY ECG
SHEET 1 OF 1
240/120V 1Ø
L1
L2
N
G
SEE NOTE 1
GRN
12DV
BLK
15A
24V
BLK
BLK
5A
GENERATOR OUTLET BOX
MAINLINE CIRCUIT BREAKER ONLY WHEN SPECIFIED
RED
GREEN
RED
SE 250 OR SE 400 REGULATOR
HZ 60
HZ 50
4
6
7
F-
F+
3
JUMPER ACCORDINGLY
EXCITER FIELD
F-
F+
T1
T2
T3
T4
T5
T6
T7
T8
T9
T10
T11
T12
L1
L2
N
NOTE:
1. GROUNDING STRAP/SCREW SEE TAG ATTACHED GENERATOR

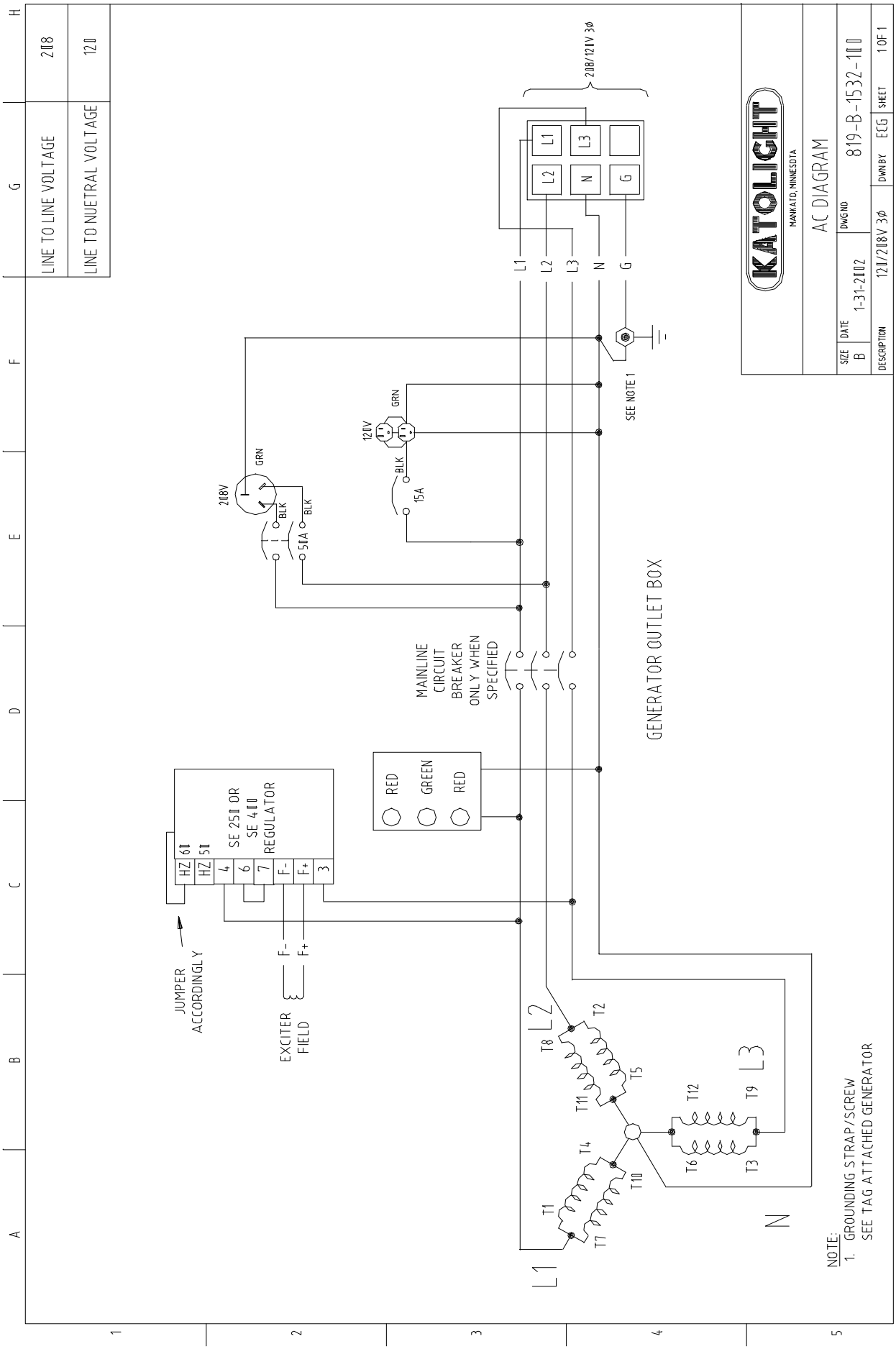
LINE TO LINE VOLTAGE 208
LINE TO NUETRAL VOLTAGE 120
KATOLIGHT
MANKATO, MINNESOTA
AC DIAGRAM
SIZE B
DATE 1-31-2002
DWG NO 819-B-1532-100
DESCRIPTION 120/208V 3Ø
DWN BY EEG
SHEET 1 OF 1
208/120V 3Ø
L1
L2
L3
N
G
SEE NOTE 1
GRN
120V
BLK
15A
208V
BLK
BLK
50A
GRN
MAINLINE CIRCUIT BREAKER ONLY WHEN SPECIFIED
GENERATOR OUTLET BOX
RED
GREEN
RED
SE 250 OR SE 400 REGULATOR
HZ 60
HZ 50
4
6
7
F-
F+
3
JUMPER ACCORDINGLY
EXCITER FIELD
F-
F+
T8
T2
T11
T5
T12
T9
T4
T10
T6
T3
T1
T7
L2
L3
L1
N
NOTE:
1. GROUNDING STRAP/SCREW SEE TAG ATTACHED GENERATOR

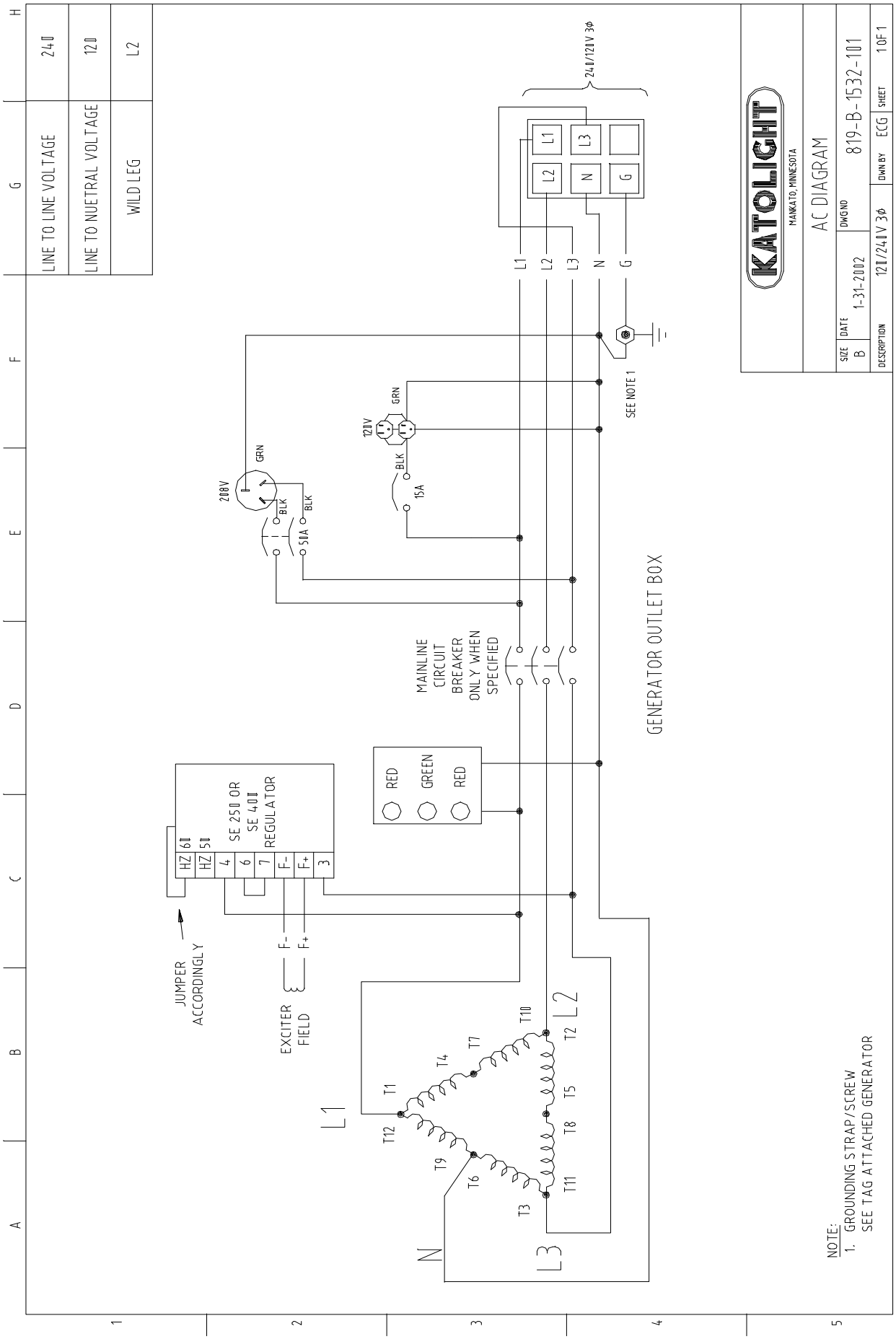
LINE TO LINE VOLTAGE 240
LINE TO NUETRAL VOLTAGE 120
WILD LEG L2
KATOLIGHT
MANKATO, MINNESOTA
AC DIAGRAM
SIZE B
DATE 1-31-2002
DWG NO 819-B-1532-101
DESCRIPTION 120/240 V 3Ø
DWN BY ECG
SHEET 1 OF 1
240/120 V 3Ø
L1
L2
L3
N
G
SEE NOTE 1
GENERATOR OUTLET BOX
MAINLINE CIRCUIT BREAKER ONLY WHEN SPECIFIED
RED
GREEN
RED
SE 250 OR SE 400 REGULATOR
HZ 6
HZ 5
4
6
7
F-
F+
3
JUMPER ACCORDINGLY
EXCITER FIELD
F-
F+
208V
GRN
BLK
BLK
5A
120V
GRN
BLK
15A
L1
L2
L3
N
T1
T2
T3
T4
T5
T6
T7
T8
T9
T10
T11
T12
NOTE:
1. GROUNDING STRAP/SCREW SEE TAG ATTACHED GENERATOR

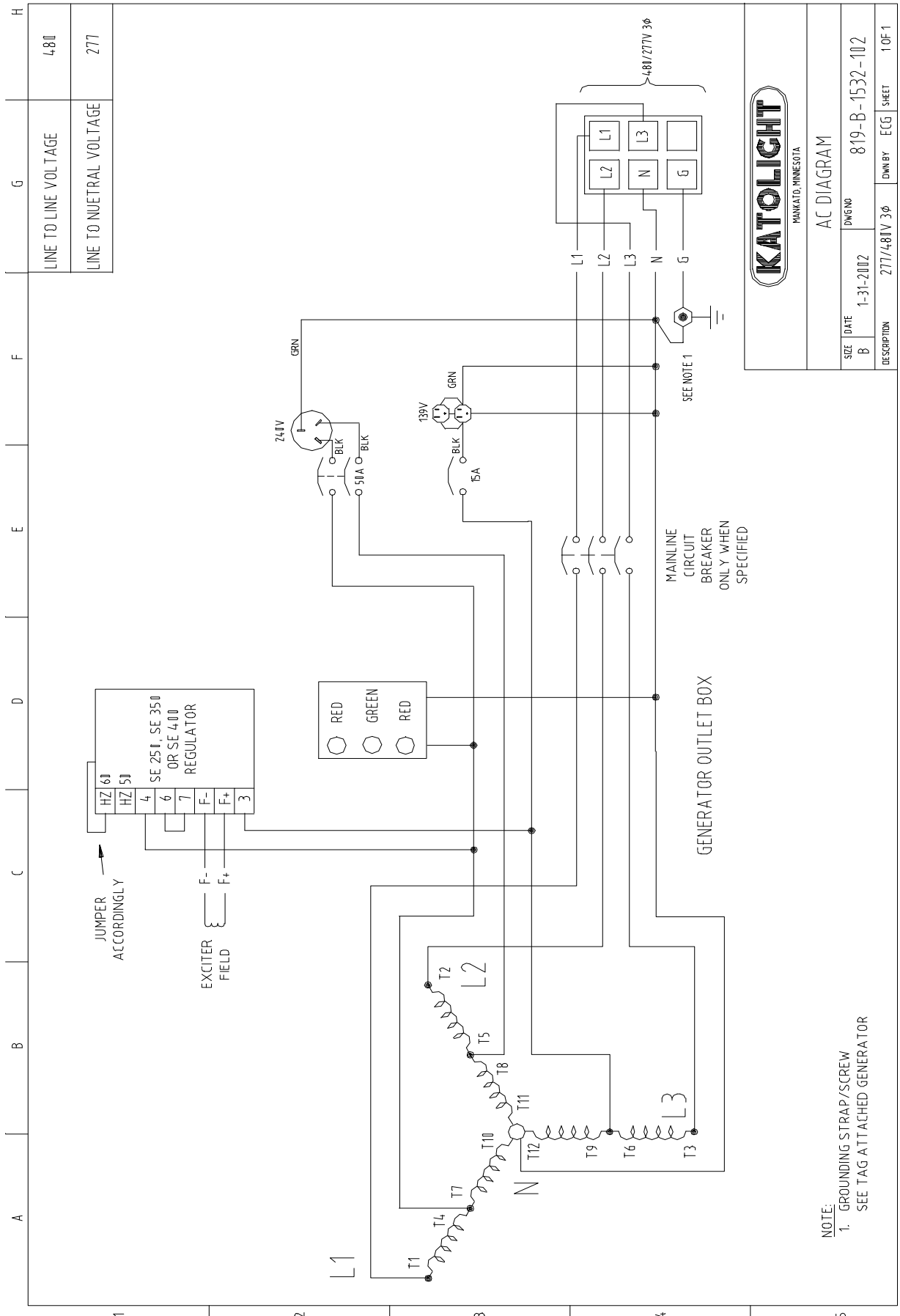
LINE TO LINE VOLTAGE 480
LINE TO NUETRAL VOLTAGE 277
KATOLIGHT
MANKATO, MINNESOTA
AC DIAGRAM
SIZE B
DATE 1-31-2002
DWG NO 819-B-1532-102
DESCRIPTION 277/480V 3φ
DWN BY ECG
SHEET 1 OF 1
480/277V 3φ
L1
L2
L3
N
G
SEE NOTE 1
GRN
240V
BLK
5A
15A
139V
MAINLINE CIRCUIT BREAKER ONLY WHEN SPECIFIED
GENERATOR OUTLET BOX
RED
GREEN
RED
SE 250, SE 350 OR SE 400 REGULATOR
HZ 60
HZ 50
4
6
7
F-
F+
3
JUMPER ACCORDINGLY
EXCITER FIELD
T1
T2
T3
T4
T5
T6
T7
T8
T9
T10
T11
T12
NOTE:
1. GROUNDING STRAP/SCREW SEE TAG ATTACHED GENERATOR

Crimping

Full Load Connector Plug
Installation Tips

The following guidelines are recommended for optimizing the assembly of connectors.

1. Contact your nearest Katolight Corporation representative to obtain the proper assembly tools.

2. Reference the assembly instruction specific to the connector. Assembly instructions for a connector can be obtained from your nearest Katolight Corporation representative.

3. Reference all applicable electrical standards requirements such as NEC, UL, CSA etc.

4. Perform a sample assembly of a few pieces for assembly verification testing. Test these samples for proper crimp dimensions, secureness, crimp resistance, connected resistance, and operating temperature. Contact your nearest Katolight Corporation representative for recommended specifications for these parameters.

5. Perform periodic assembly verification testing to assure assembly process and tooling are performing correctly. Normally, crimp dimensions are checked at shorter intervals and crimp resistance and secureness are checked at longer intervals. The intervals are dependent upon the tooling, the wire and the connector being used.

Important Assembly Notes:

Proper crimping and cleaning of the wire is essential for optimizing connector service.

If the proper crimp has been performed, the secureness is satisfactory but the crimp resistance is high (which may cause high operating temperatures) the wire may have surface contamination. A light abrasive such as the 3M Scotch Brite ™ is recommenced for
cleaning the wire.

Please Note: Tin-plated wire resists surface contamination caused by oxidation.

Connector Crimping & Soldering

1. Stripping Cable Insulation

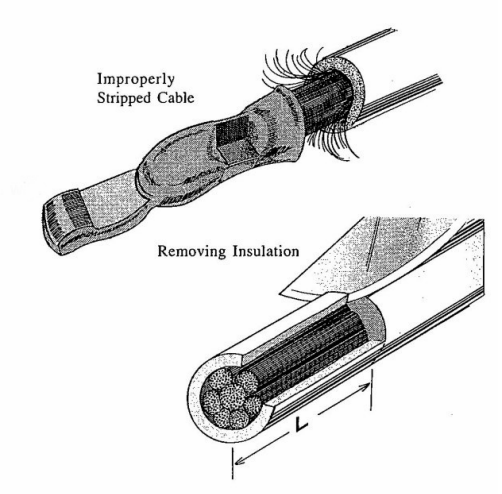

Problems with cable harness and connector systems often begin with improper or accidental cutting of wire strands when stripping cable insulation. Each strand is important, and all of them must be included in the contact barrel to avoid unnecessary hot spots during later operation. When removing insulation, position a sharp blade at a right angle and apply steady, controlled pressure, cutting only the cable insulation, not the copper wire. Strip cable to the right length for the contact being crimped.

2. Cleaning Copper Wire

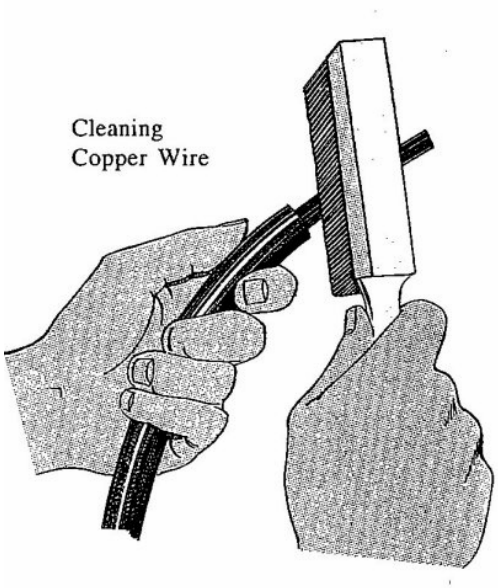

Aged and badly tarnished copper wire should be thoroughly scraped with a stiff wire brush that penetrates the entire bundle and cleans every strand. The wires are ready for insertion into the contact barrel when they are burnished to their original bright copper finish. Contact barrels are lined with silver plating to assure consistently high conductivity, which will be reduced if the barrel is crimped around aged or tarnished copper wire.

3. Crimping

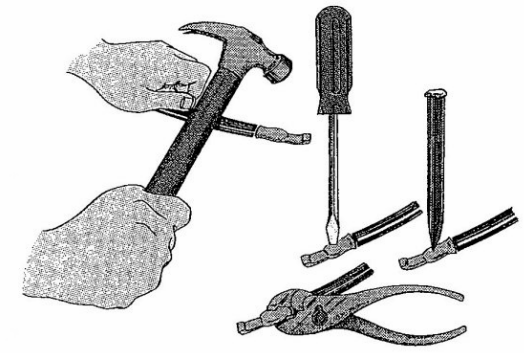

The best preparation will be defeated if inadequate tools or improper crimping procedures are employed. Never use a hammer and chisel or the “squeeze-in-a-vise” method. They won’t do the job, and will lead directly to substantial reduction in connector life.

Use a crimping tool. It effectively compresses the contact barrel tightly around the cable strands so that all of them are pressed tightly against each other and the inside wall of the contact barrel. Doing this requires that the stripped cable be inserted all the way into the barrel of the contact, and that the contact point is centered in the crimping tool.

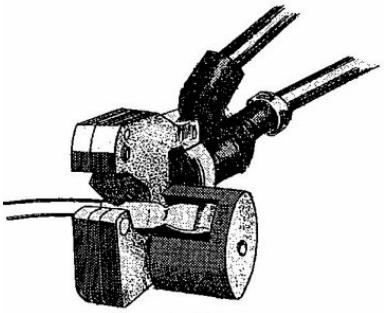

Pneumatic Crimp

When the crimp has been completed, check the appearance of the contact. A properly crimped contact barrel is compacted tightly with the outer strands. The outer strands on an improperly crimped barrel will be loose and will not have adequate clamping force. Test for low pull-out force by giving the cable a tug. If the cable can be loosened, recrimp until it is tight.

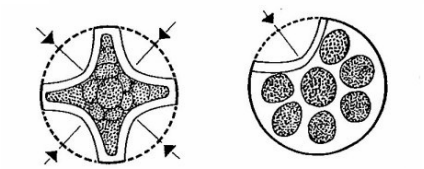

Properly Crimped

Improperly Crimped
(Contains air pockets)

4. Soldering

The alternative to crimping is to solder all cable strands within the contact barrel. The right proportion of solder is essential if this procedure is employed. Use a quality 60/40 solder (60 percent tin, 40 percent lead) in wire form with a rosin flux core. Cable strands should be separately fluxed with rosin paste, and the contact should be held in a vise with the barrel entrance facing up. Apply heat to the outside of the barrel while the solder flows in beside the wire strands.

Here are some things to avoid when soldering:

A. Don't use too much solder – to the point that it flows out of the contact barrel.
B. Don't allow flux or solder on the outside of the contact. This will interfere with contact mounting within the installation or with the contact connection to a mating connector.
C. Don't overheat and cause excessive solder to "wick" up into the cable and stiffen it. This could interfere with contact flexibility when connectors are mated.
D. Don't solder when contact is in the connector housing. Solder away form the housing and then insert the contact into the housing.

Note: Underwriter Laboratories (UL) requires the use of a cable clamp for soldered connections to unsupported leads.

5. Inserting Contact into Housing

Contacts should never be forced into housing. If the contact does not fit easily, check the contact barrel for distortion. Replace the barrel if it is distorted or shows signs of wear or damage.

Preventive Maintenance

Damaged connectors, contacts and cables may present hazard. To avoid these problems, conduct the following maintenance checks at least once annually. When you see a problem, take corrective action immediately.

1. Dirty Connectors

When engaged and disengaged, the crown contact surfaces "over-wipe", thus providing a self-cleaning action. To ensure the continued benefit of the feature, clean the contact surfaces.

2. Melting Connectors

Connector housings overheat and melt for many reasons. To prevent this:

A. Examine the crimp between cable and contact. Improper crimping, corrosion, and broken wires result in unnecessary resistance causing the contact to heat up like a toaster.
B. Check contact crown surfaces for signs of "pitting" caused be dirt or disengaging connectors under load.

3. Other Conditions

If any of the following conditions exist, the connector housing, contact and / or cable should be replaced immediately.

A. **Housing:** Cracks, missing pieces, evidence of excessive heat, discoloration.
B. **Contacts:** Pitting, burns, corrosion, excessive wear, cracked crimp barrels, discoloration.
C. **Cable:** Exposed copper near housing, cracked cable, peeling or frayed insulation.
D. **Handles:** Loose attachment and such signs of damage as missing or loose hardware and cracked or broken plastic. (Handles should be used for connectors that are hard to reach or move.)

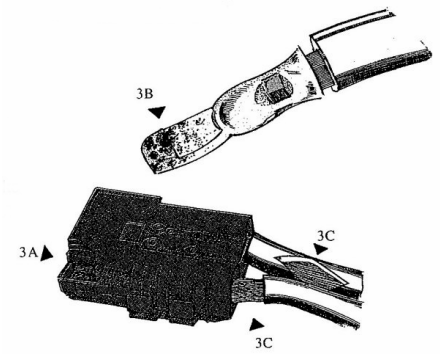

E. **Cable Clamps:** Loose attachments, signs of abraded cable jacket, missing or loose hardware. (Cable clamps should be used to relieve strain on unmounted cable.)

CONNECTOR CHECKLIST

EQUIPMENT IDENTIFICATION NUMBER

HOUSING												
Cracks												
Breakage												
Excessive Heat - Touch												
Excessive Heat - Discolored												
Excessive Heat - Melting												
CONTACTS												
Pitting												
Discoloration												
Wear												
Corrosion												
Improper Crimp												
CABLE CLAMP												
Present												
Missing Hardware												
Tight Connections												
Frayed Cable												
Damage												
HANDLE												
Present												
Missing Hardware												
Tight Connections												
Damage												
CABLES												
Exposed Copper												
Cracks / Cuts												
Excessive Heat												
Cut Strands												
Corrosion												
Damage												

Terminology

Applicator	A semi-automatic installation machine consisting of an upper and lower half that is used to crimp contacts onto wire. Used in conjunction with an electrical / mechanical press.
AWG	American Wire Gauge. A standard system for designating wires diameters.
Blindmate	to join two connector halves in a normal engaging mode without visual orientation.
Color Coding	A system of identification for terminals and related devices.
Contact Resistance	The electrical resistance of metallic surfaces at their interface in the contact area under specified conditions when carrying a specified test current. Overall contact resistance includes wire to wire measurement.
Contact Retention	Minimum axial load in either direction which a contact must withstand while remaining firmly fixed in its normal position within a housing.
Crimp Retention	The axial load which a contact can withstand without separation for the wire.
Crimp Termination	A connection in which a metal sleeve is secured to a conductor by mechanically deforming the sleeve with presses, or automated crimping machines, eliminating the need for solder. Suitable for all wire types.
Cycle Controlled Crimp Tool	A type of crimp tool that requires the crimp cycle be completed before the tool releases the contact. A cycle controlled tool ensures that proper mechanical pullout and proper crimp resistance values are achieved.
Detent	A bump or raised section projecting from the surface of a contact for keeping the contact in position relative to another and released by greater force.

Dielectric Strength (Withstanding Voltage)	The highest potential difference (voltage) that an insulation material of given thickness can withstand for a specified time without occurrence of electrical breakdown through its bulk.
Finger Proof	A connector intended for usage external to the end equipment shall have live parts protected against exposure to contact by persons when assembled, installed and mated as intended as determined by UL Articulated probe.
Flammability	The measure of a material's ability to support combustion. Often tested per UL 94
Flat Wiping	The sliding action which occurs when contacts are mated. Wiping has the effect of removing small amounts of contamination from the contact surfaces, thus establishing better conductivity.
Heat Rise	Temperature rise associated with the electrical load applied to a mated connection.
Hermaphroditic (Genderless) Connector	A connector in whom both mating members are exactly alike at their mating face. There are no male or female members, but designs provide correct polarity.
Insulation Resistance	Ratio of applied voltage to the total current between the two Electrodes in contact with a specific insulation.
Locator	Device for positioning contacts into crimping dies.
Make First / Beak Last (Sequencing)	Protective measure against excess currents short-circuits and ground faults by contacts used to interrupt the fault current flow before connector mating.
Mating Force	Force required joining two connector halves in a normal engaging mode.
Mechanical Keys	The use of a mechanical feature that assures that the coupling of identical mating components can occur in only one direction.

Modular	Refers to similar parts or modules used as building blocks. A modular connector is one in which similar or identical sections can be assembled together to provide the appropriate connector type or size for the application.
Operating Temperature Range	Connector temperature rating established by materials used; plastic, finish and the base metal. Applying an electrical load will result in a temperature rise that is additive to the operating ambient.
Polarization	A technique of eliminating symmetry so that parts my only be mated one way.
Pulse (Surge) Current	Highest instantaneous current that will run through a system.
Reducing Bushing	Separate tubular sleeve used to downsize the diameter of a crimp barrel for a smaller size wire.
Reeled Contacts	Contacts attached to a feeder strip for use in a high volume crimping tool.
Self Wiping	The sliding action which occurs when contacts are mated. Wiping has the effect of removing small amounts of contamination form the contact surfaces, establishing better conductivity.
Spring Loaded	A means of providing contact normal force with the use of a mechanical spring.
Strain Relief	A means of termination or installation that reduces the transfer of mechanical stress from the conductor.
Termination	Means of joining contacts to a conductor.

Contact Katolight At
1-800-325-5450
To Locate Your Local Distributor
Or Service Agent
Also Check Us Out At:
www.katolight.com

OPERATING INSTRUCTIONS and SERVICE INFORMATION

For KATOLIGHT LR Series

PTO Driven Alternators

MODELS

25LR1, 35LR1, 45LR1, 55LR1 and 85LR1

Read this book before operating the alternator and save for future reference.

Write the Model number, Type number and Serial number of the alternator in the spaces below. Be sure to give these numbers when ordering parts or corresponding about the alternator.

_____

Alternator Model

_____

Serial

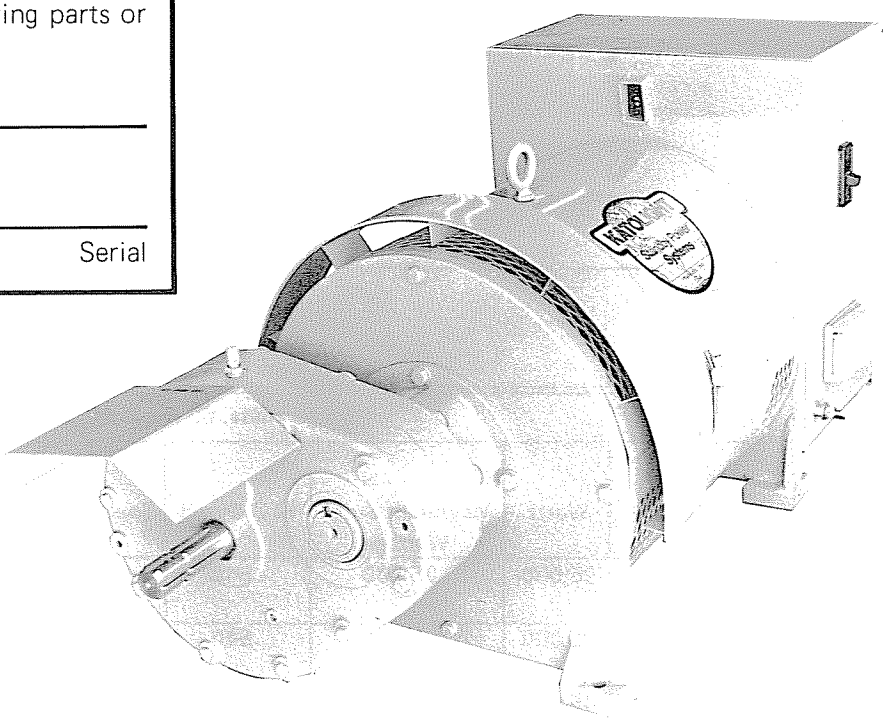

KATOLIGHT CORPORATION

Mankato, MN 56001 Phone: (507) 625-7973

Form LRM-682

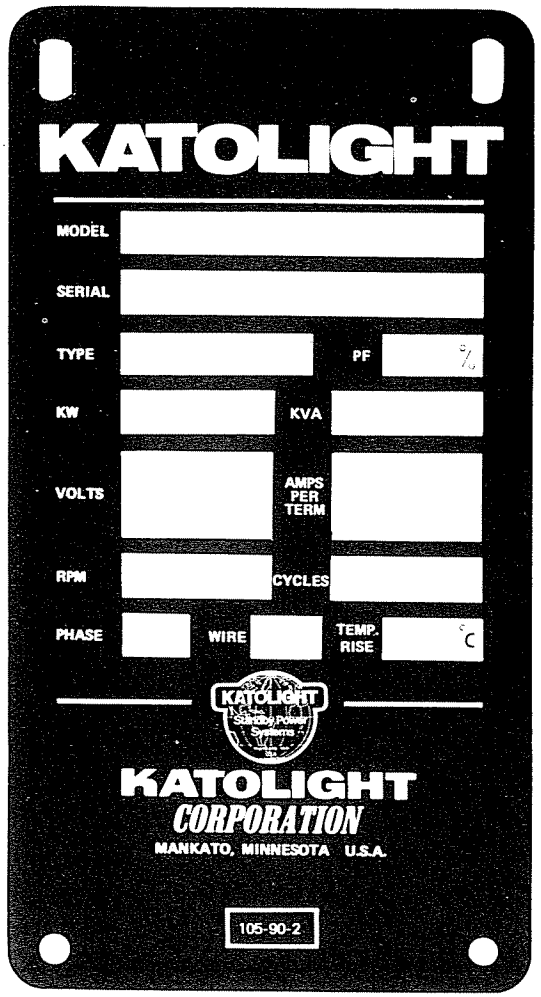

ALTERNATOR DATA

The alternators described in this manual are single phase, 120/240 VAC, 1800 RPM revolving field brushless type with Automatic Voltage Regulation. Output voltage may be varied by turning the voltage adjust potentiometer.

Standard equipment includes: Speed Monitor Light, Automatic Voltage Regulator, Brushless Revolving Field Type Alternator, Mainline Circuit Breaker, 15 Amp, 120 Volt 3 Wire Duplex Receptacle, 50 Amp 240 Volt 4 Wire Receptacle, Full Load Connector, Safety Shield, Lifting Eyes, Helical Gears, Mounting Base, Gear Lube, Grounding Terminal, 1800 RPM Slow Speed, Rodent Screen & Drip Proof Design.

Important data pertinent to your alternator is given on the nameplate attached to the alternator. Additional information is contained in Table A. For handy reference, copy your plant nameplate information in the spaces to the left.

TABLE A
ALTERNATOR AND GEAR DRIVE DATA

Single Phase, 60 Hz, 1800 RPM

Model No.	Watts	Maximum Surge Wattage	PTO Speed	Speed Increaser	Power Shaft		
					Model	HP	Size
25LR1	25,000	75,000	540	GR52238	4001	60	Comp. 33" Ext. 42"
35LR1	35,000	105,000	540	GR52238	4001	60	Comp. 33" Ext. 42"
45LR1	45,000	135,000	1000	52161	4200	80	Comp. 32" Ext. 41"
55LR1	55,000	165,000	1000	52161	4200	80	Comp. 32" Ext. 41"
85LR1	85,000	255,000	1000	52161	4200		Comp. 32" Ext. 41"

TABLE OF CONTENTS

ALTERNATOR DATA	Inside front cover
INTRODUCTION	2
DETERMINING YOUR SPECIFIC LOAD	2
HOW ELECTRIC MOTORS ARE CLASSIFIED, AND WHAT THEIR RATINGS MEAN	2
INSTALLING THE ALTERNATOR	3
Mounting the alternator	3
Aligning alternator with tractor power take-off	3
Connecting alternator to load	5
Gearbox lubrication	5
Before starting	5
ELECTRICAL DIAGRAM	4
OPERATING THE ALTERNATOR	5
Checking alternator output voltage	6
Alternative method of checking frequency	6
Voltage regulator function	6
Voltage regulator replacement	6
Exciter field voltage	7
ELECTRICAL SERVICE AND MAINTENANCE	7
Testing the rotating rectifier	7
Removing and installing diodes	7
Restoring residual magnetism	8
MECHANICAL SERVICE AND MAINTENANCE	9
Cleaning	9
Replacing bearings	9
Alternator disassembly and assembly	9
LR CUTAWAY DRAWING	10
LOCATING TROUBLE	11
Trouble shooting chart	11 - 12
PARTS ORDERING INSTRUCTIONS	12

INTRODUCTION

Before any Katolight PTO Driven Alternator is shipped from the factory the alternator is inspected and tested for performance. No unit is shipped unless it produces its rated capacity. Carefully unpack the unit and visually inspect it for damage. If it is damaged, check with the transportation carrier for adjustment of the damage. Before placing the unit in operation, check to make sure that the lubrication is in the gearbox. If empty, remove level check plug and fill with EP90 weight gear oil to check plug level.

If upon installation a new alternator does not work properly, check all electrical connections and the alternator speed before concluding the alternator is defective.

DETERMINING YOUR SPECIFIC LOAD

The load can be determined by adding the wattage requirements for each light, appliance and motor which will be operated by the unit. The following chart lists approximate running or operating watts required for various electrical appliances.

TABLE B
APPROXIMATE WATTS REQUIRED
FOR ELECTRICAL APPLIANCES

APPLIANCE	WATTS
Lamp Bulbs	See wattage on bulbs
Radio	40-200
Television	150-300
Vacuum Cleaner	200-750
Automatic Washer	400
Air Conditioner (¾ Ton)	1,250
Refrigerator	325
Food Freezer	300
Furnace (Oil)	700
Deep Well Pump	2,000
Electric Range	600-10,000
Hot Plate (per burner)	600-1,200
Toaster	600-1,130
Water Heater	1,500-5,000
Glow Heater	600-1,200
Heating Pad	40-80
Sun Lamp	250-1,000
Flat Iron	600-1,200
Laundry Dryer	4,750
Electric Heat System	5,000-20,000

Check all appliance nameplates for exact ratings.

HOW ELECTRIC MOTORS ARE CLASSIFIED, AND WHAT THEIR RATINGS MEAN

Electric motors require more current (amperes) starting than running. Split-phase motors are difficult to start and require 5 to 10 times as much current to start as to run, dependent on the NEMA code letter rating. Capacitor motors require 2 to 4 times as much current to start as to run. Repulsion Start Induction Motors require 1½ to 2½ times as much current to start as to run.

The chart below shows the approximate current required to run and start 120 volt, 60 cycle, NEMA Code F induction motors under average load conditions.

Horse Power	Running Amperes	Starting Amperes
1/6	4.4	7 to 15
1/4	5.8	10 to 15
1/3	7.2	15 to 25
1/2	9.8	20 to 30
1	16.0	40 to 50

The NEMA code letter assigned by the motor manufacturer will govern the starting (locked rotor) current surge. The chart below shows the NEMA code letters and their corresponding range of multipliers for the starting current requirement in amperes.

NEMA Code letter Motor Rating	Kilovolt-Amperes per Horsepower (Locked Rotor)
A	0 – 3.14
B	3.15 – 3.54
C	3.55 – 3.99
D	4.0 – 4.49
E	4.5 – 4.99
F	5.0 – 5.59
G	5.6 – 6.29
H	6.3 – 7.09
J	7.1 – 7.99
K	8.0 – 8.99
L	9.0 – 9.99
M	10.0 – 11.19
N	11.2 – 12.49
P	12.5 – 13.99
R	14.0 – 15.99
S	16.0 – 17.99
T	18.0 – 19.99
U	20.0 – 22.39
V	22.4 – and up

Here is a formula for amps:

The starting current for 1 h.p.
Code F 230 V.A.C.

$$1 \times 5.6 = 5.6 \text{ KVA}$$

$$\text{Amp} = \frac{\text{KVA}}{\text{Volts}} = \frac{5.6^{10^3}}{230} = 24.3 \text{ amp}$$

Because the heavy surge of current required for starting motors is needed only for an instant, the alternator will not be damaged if it can bring the motor up to speed in a few seconds. If difficulty is experienced in starting motors, turn off all other electircal loads and, if possible, reduce the load on the electric motor.

NOTE

IN APPLICATIONS WHERE SEVERAL MOTORS ARE TO BE STARTED, EXCESSIVE OVERLOAD MAY BE AVOIDED BY STARTING THEM ONE AT A TIME. START THE MOTOR THAT REQUIRES THE HIGHEST RUNNING AND STARTING CURRENT FIRST.

INSTALLING THE ALTERNATOR

Provide sufficient ventilation. Do not operate tractor driven alternator in a non-ventilated area. Do, however, provide protection from heavy snow or dust which may plug air cleaners and ventilation openings.

For best operation the following factors should be taken into consideration:

1. Dirt — Dust particles and dirt can cause excessive wear, not only to bearings but to all rotating parts of the alternator.

2. Moist or wet conditions are hazardous. In addition, all electrical equipment should be protected from excessive moisture which deteriorates insulation and causes short circuits.

The generator must be stored properly. Protect it from moisture and dirt. If the unit is to be left in the open, it should be covered whenever it is not in use. All ventilating openings should be cleaned periodically and kept clear and open while operating.

MOUNTING THE ALTERNATOR

The alternator must be solidly bolted to a foundation, platform or bed of a trailer. All four feet on the alternator must contact the foundation or trailer bed. If space is left between a mounting foot and the foundation or trailer, shim it to take up the space and then insert and tighten bolts.

ALIGNING ALTERNATOR WITH TRACTOR POWER TAKE-OFF

The double universal joint construction of the power take-off drive shaft allows for considerable angular misalignment between the gearbox and the tractor power take-off shaft. As shown in Figure 1 the angular misalignment of the universal joints, if at all possible, should not be more than 15 degrees. If the power take-off drive shaft is taken apart, make certain the drive shaft universal joint knuckles are in time with one another as shown in Figure 2. If the drive shaft universal joint knuckles are not in time chattering will occur which will cause a flicker in the electrical output. The same flicker will also occur if the angle of the drive shaft from the alternator to the tractor power take-off is more than 15 degrees. Make certain the power take-off shaft lock pin is properly engaged and the removable power take-off shaft shields are installed before operating the unit.

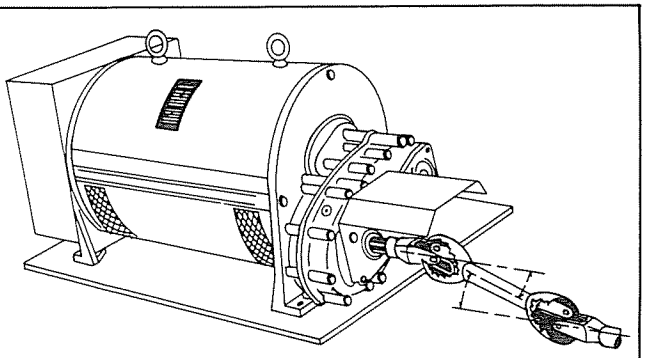

FIGURE 1 - TRACTOR DRIVE GENERATOR CONNECTED TO TRACTOR POWER TAKE-OFF

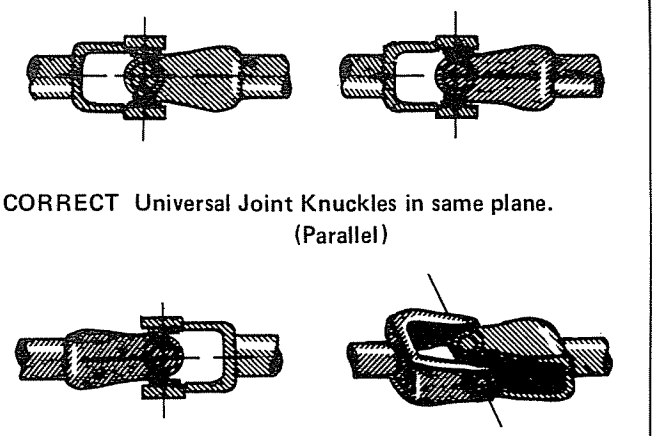

CORRECT Universal Joint Knuckles in same plane. (Parallel)

INCORRECT Universal Joint Knuckles NOT in same plane (Not Parallel)

FIGURE 2 - ALIGNING POWER TAKE-OFF SHAFT UNIVERSAL JOINTS

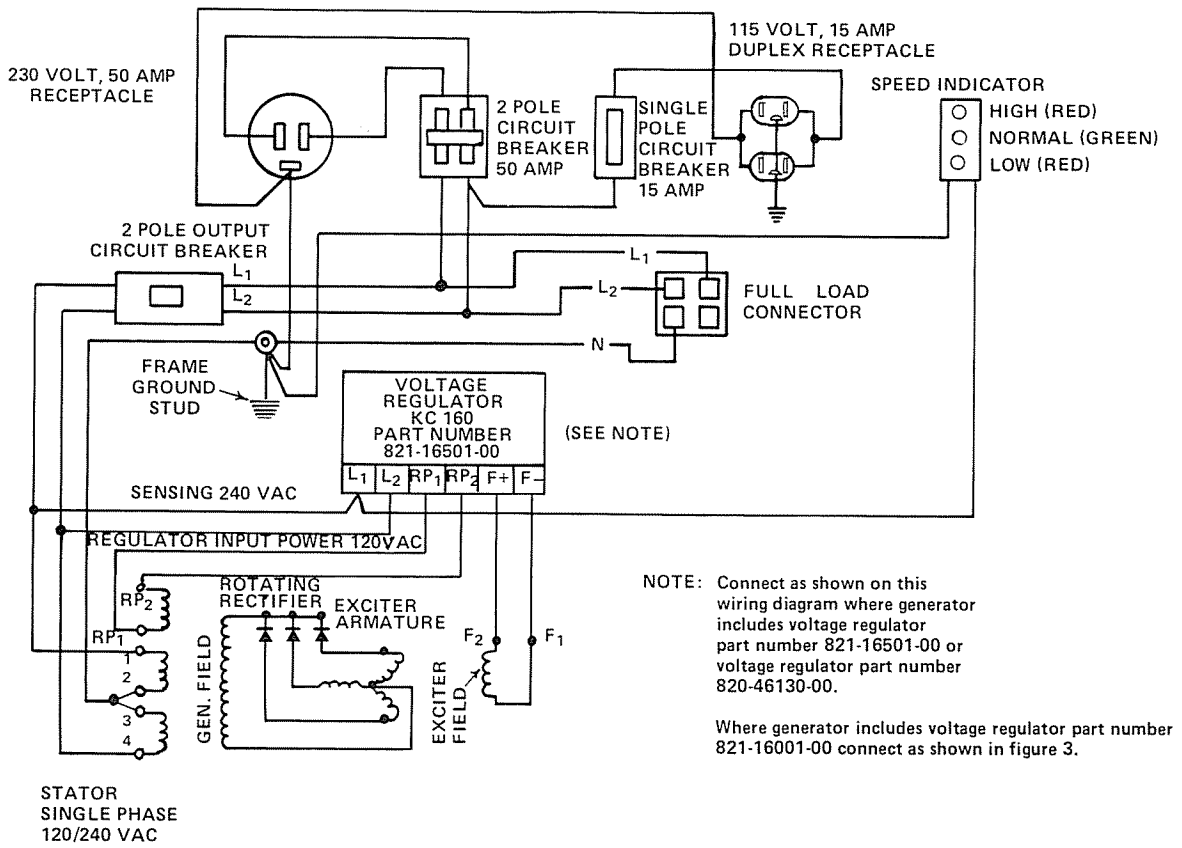

Figure 2 Wiring Diagram, LR1 Generator with Voltage Regulator Part Number 821-16501-00 or 820-46130-00

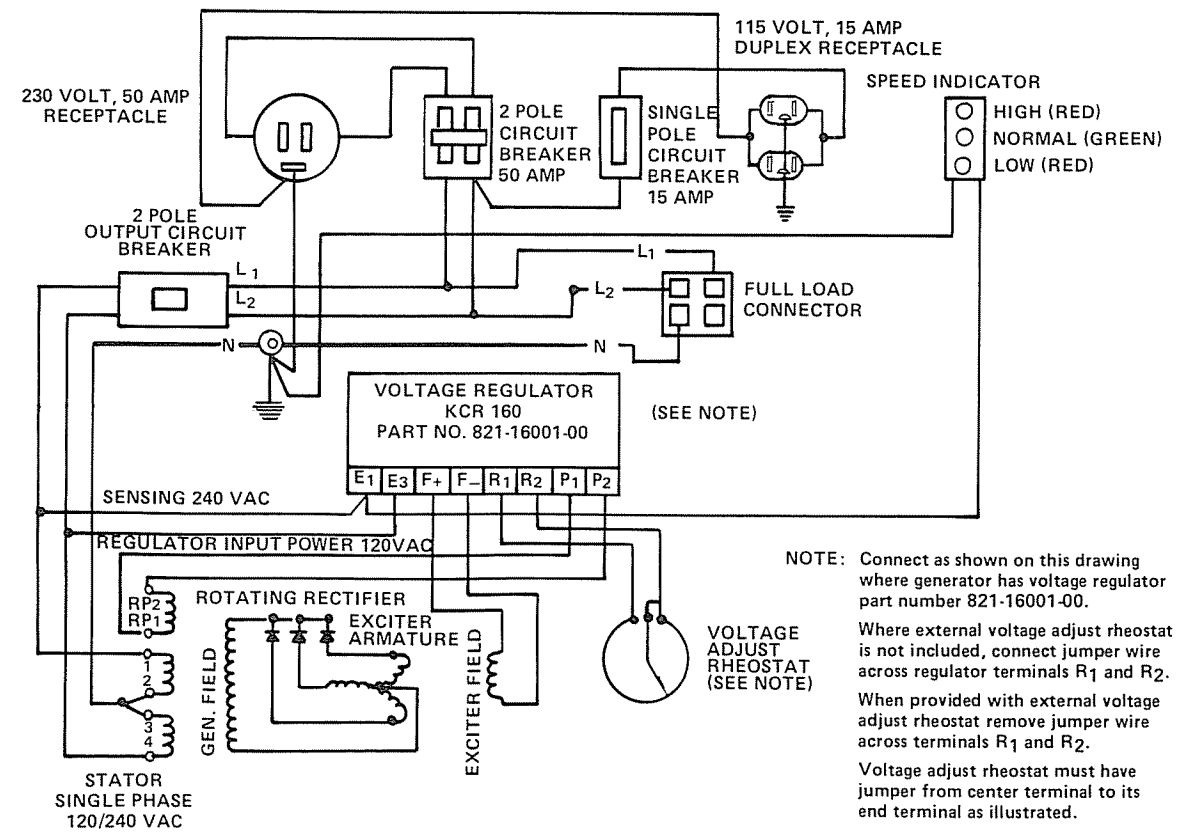

Figure 3 Wiring Diagram LR1 Generator with Voltage Regulator Part Number 821-16001-00

CONNECTING ALTERNATOR TO LOAD

* Load can be taken from recepticals or by connecting the Alternator into an existing service through the full load connector plug.
* Load taken from recepticals should not exceed the respective receptical rating and should never exceed the alternator rating. The 120 VAC duplex receptical is rated for 15 amps and the 240 VAC receptical is rated at 50 amps. Both recepticals and the full load plug are protected by individual overload protection circuit breakers.
* Load taken from the 240 VAC full load cord set should not exceed the full load rating of the alternator.
* When the Alternator is connected into an existing service normally supplied by commercial power an approved TRANSFER SWITCH MUST BE USED. Check your local electrical code requirements before you make any connections.

INSTALLING GROUND WIRE

Ground the Alternator frame and Neutral leg to a solid earth ground. The ground wire should not be smaller than the load line. A ground stud terminal is supplied for this connection.

GEARBOX LUBRICATION

Check oil level. Fill with EP 90 Gear oil if necessary. Maintain oil level slightly below check plug. DO NOT OVERFILL. Overfilling will cause heating and seal damage.

LAST CHECK BEFORE STARTING THE ALTERNATOR

Before starting the alternator for the first time, the unit should be inspected as follows:

1. Check electrical connections to load. (Refer to the electrical connection diagrams.)

2. Remove cover surounding alternator. Turn rotor manually and visually inspect for foreign objects that may have gotten into the unit during shipping and/or uncrating.

3. Check gearbox oil level.

4. Check alignment of PTO shaft.

5. Make sure all protective covers and guards are in place.

OPERATING THE ALTERNATOR

1. Open the mainline circuit breaker or make sure the transfer switch is "Not" in the emergency position. Starting the alternator with the load applied is not recommended.

2. Start Tractor and Engage PTO.

3. Make certain unit is at rated speed and producing desired voltage. Procedures for reading monitor light and voltage are contained in the following paragraphs. Speed may dip slightly when load is applied and therefore, tractor throttle setting with full load applied may have to be increased slightly from no load setting. The load can now be applied to the alternator by closing the mainline circuit breaker or by transfering the transfer switch into the emergency position.

4. Speed Monitor. When the alternator is being driven at proper speed (1800RPM), the Green light on the Speed Monitor will come on. At 1800 RPM, the alternator puts out 60 Hertz (60 cycles per second). The Green light goes off and the upper or lower red light comes on if the speed is too high or too low. The Green light stays on as long as the alternator output is between 59 and 62 Hertz.

   Motors will run satisfactorily if power frequency is within 5% of their nameplate value, as far as torque and heating are concerned. But note that on induction motors and synchronous motors, speed varies in proportion to frequency, hence any equipment that depends on frequency for timing will not be accurate if alternator speed is off.

5. Using the Speed Monitor.

   a. When starting up the power plant, watch the Speed Monitor.

   b. While the unit is coming up to speed, the bottom RED light will come on; continue to increase speed until the Green light comes on.

   c. After load is applied, it may be necessary to readjust entire speed.

   d. Check the Speed Monitor periodically while the unit is in operation, especially after adding or taking off load. If the top red light comes on, reduce speed; if the bottom red light comes on, increase speed.

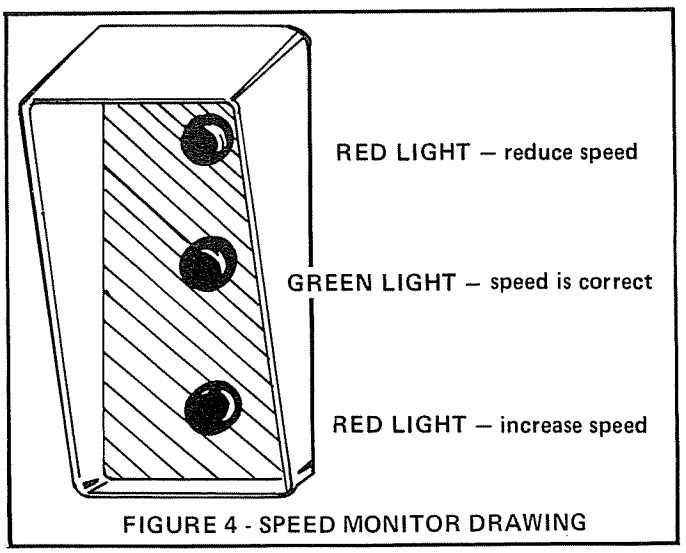

FIGURE 4 - SPEED MONITOR DRAWING

6. When the alternator is used in extremely cold weather, start the tractor and with the tractor idling, engage the power take-off and let the clutch out slowly. Make certain the gearbox and alternator rotor turn freely.

7. FINAL CAUTION:
DO NOT OPERATE TRACTOR IN NON-VENTILATED AREA.

STOP TRACTOR BEFORE FILLING WITH FUEL.

IN APPLICATIONS WHERE ALTERNATOR IS CONNECTED TO SERVICE WHICH IS NORMALLY SUPPLIED BY COMMERCIAL POWER, INSTALL A TRANSFER SWITCH. THIS PRECAUTION PROTECTS PERSONNEL SERVICING COMMERCIAL POWER LINES.

AVOID CONTACT WITH ALTERNATOR VOLTAGE. WHENEVER MAKING ELECTRICAL CONNECTIONS OR REPAIRING ALTERNATOR, FIRST STOP UNIT.

CHECKING ALTERNATOR OUTPUT VOLTAGE

To check the voltage, use a good quality AC Voltmeter—inexpensive meters often have an error of 10% or more. For best results, choose a meter that will indicate the desired voltage at about ¾ of full scale. For example: to read 240 volts AC, use a 0 to 300 volt AC meter.

On the alternators described in this manual, the line-to-neutral voltage (line 1 [L1] to neutral [N] or L2 to neutral) is one half of the line-to-line voltage (L1-L2). If the two line-to neutral voltages are not equal, it could be due to unbalanced load, a grounded wire, a bad connection, or to a defect in the stator windings.

For personal safety, connect the meter to the generator before starting the engine.

WARNING: DANGEROUS VOLTAGES ARE PRESENT IN THIS UNIT!

ALTERNATIVE METHOD OF CHECKING FREQUENCY

Alternator frequency can be checked with an electric clock and a watch. They should have sweep second hands. Plug an electric clock into the 120 volt receptacle on the alternator. If the second hand on the electric clock moves at the same rate as the second hand on the watch, generator frequency is correct. If the clock lags behind the watch, engine speed is too low; if the clock moves ahead of the watch, the engine is running too fast.

VOLTAGE REGULATOR FUNCTION

Unless the alternator's output voltage is kept within narrow limits, equipment that is powered by it may not operate properly and may be damaged. Motors are usually designed to run satisfactorily only when the voltage at their terminals is within 10% of the nameplate value. In particular, motors will have their torque reduced and will overheat if they are operated at too low a voltage. If the voltage is too high it will cause some devices to burn out.

The purpose of the voltage regulator is to keep the alternator voltage at very near its set value. It does this by supplying the proper amount of direct current to the exciter field, according to the needs of the alternator. An increase in load normally causes the alternator voltage to decrease; the regulator senses this drop in voltage and increases the exciter field current just enough to bring the voltage back up. A decrease in load has the opposite effect—it causes the alternator voltage to go up; the voltage regulator senses this and reduces exciter field current so as to bring the alternator voltage back down to the set value.

The voltage regulator has an adjustment for setting the alternator voltage. This voltage is set at the factory and should require no further adjustment. However, should conditions exist which cause voltage output to change, voltage adjustment can be made with a screwdriver on the R2 adjustment. See regulator layout in Figure 5.

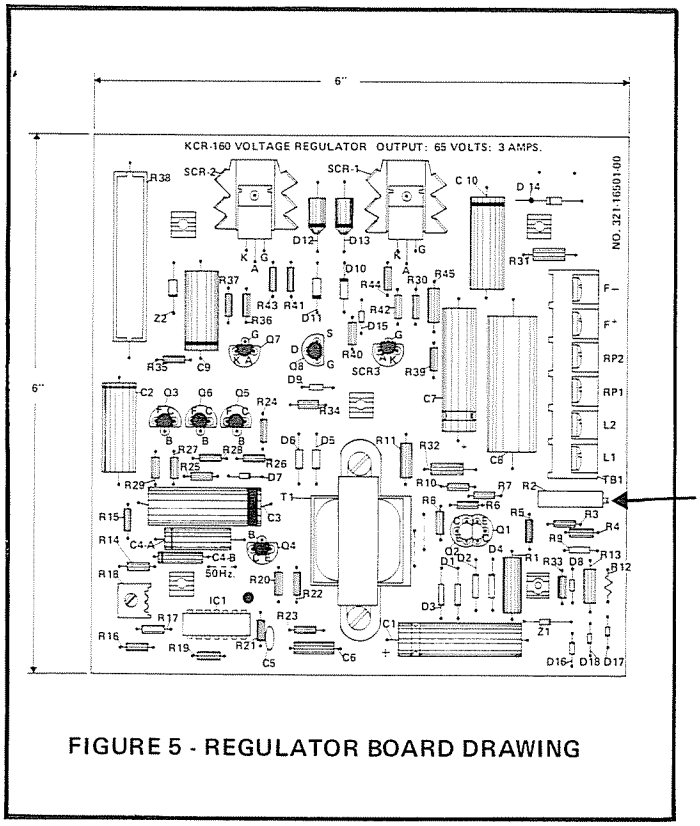

FIGURE 5 - REGULATOR BOARD DRAWING

VOLTAGE REGULATOR REPLACEMENT

If the voltage regulator is defective it is advisable to replace the entire circuit board assembly. To reconnect properly, refer to the wiring diagram in the installation section. All connections are made at the terminal strip on the regulator.

EXCITER FIELD VOLTAGE

When there is a problem with the alternator, it is often useful to check the Voltage Regulator output to the exciter field. This voltage can be read at terminals F+ and F— on the regulator. The values in Table C were taken from units running at rated speed (1800 rpm) and rated output voltage (240 VAC) with NO LOAD. Exciter field voltage will normally be higher than the tabled value when the alternator is loaded. Note that DC meters are required to measure the exciter field voltage and current. Polarity must be observed.

TABLE C
EXCITER FIELD VOLTAGE AND CURRENT

25LR1	14.0 Volts DC	.25 Amp
35LR1	14.0 Volts DC	.25 Amp
45LR1	18.0 Volts DC	.28 Amp
55LR1	24.0 Volts DC	.31 Amp
85LR1	28.0 Volts DC	.41 Amp

ELECTRICAL SERVICE AND MAINTENANCE

TESTING THE ROTATING RECTIFIER OR DIODE

A rotating rectifier changes the AC that is generated in the exciter armature to DC which is required for the alternator field. The rotating rectifier consists of three individual rectifier diodes. Each individual diode has two terminals. The diodes are threaded into the sleeve shaft of the exciter armature; this makes it possible to test the rectifier diodes with a 3 volt DC test lamp as shown in Figure 6. Figure 6 shows the test being made with the diode removed entirely from the circuit. It is possible, however, to test the rectifier without disassembling it.

1. Stop the alternator and remove the cover from the outlet box.

2. The connection between the alternator field and the exciter armature can be seen on the exciter armature: the wires are bolted together, covered with an insulating sleeve, and bound to the armature with plastic tie wraps. Note the position of this connection so that is can be restored properly later. Cut and remove the tie wraps, being very careful not to damage the armature; remove the sleeve and open the connection.

3. Test each diode as shown in Figure 6.

   a. Open diode. If any diode does not pass current as it should, replace it. Refer to the paragraph on Removing and Installing Diodes.

   b. Shorted diode. If one of the diodes is shorted, it will be difficult to identify it without unsoldering the diode connections. If a short is indicated, unsolder and test diodes one by one until the shorted diode is found.

4. After making sure that good diodes are installed, restore all connections. For securing the alternator field connection, obtain plastic tie wraps similar to the ones installed at the factory and be careful not to damage the armature winding when tying down the wires.

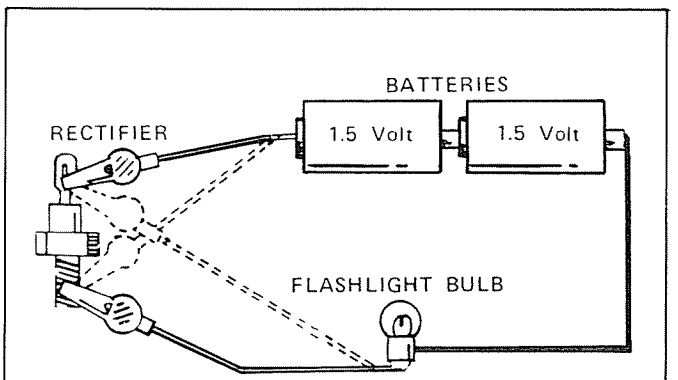

FIGURE 6—TESTING ROTATING RECTIFIERS WITH TEST LIGHT

REMOVING AND INSTALLING DIODES

The diodes are rugged and will easily withstand the stresses of normal operation, but they can be damaged during removal or installation unless it is done carefully.

1. Do not try to turn the diode without first unsoldering it, since a twisting force on the solder terminal could damage the diode internally.

2. When soldering or unsoldering, do not use any more heat than necessary. The diode can be protected from excessive heat by applying a clip-on heat sink or a long-nosed pliers on the terminal between the soldering iron and the body. of the diode.

3. Do not use excessive force when screwing the diode into its mounting. Considerably less force is required here than in tightening bolts of similar size.

RESTORING RESIDUAL MAGNETISM

The cores of the alternator and exciter fields retain a certain amount of magnetism after the power plant has been shut down. This residual magnetism must be present to begin the voltage build-up process when the power plant is started up again. If residual magnetism is lost due to a long idle period or some other cause, it will be necessary to flash the field. This is done by connecting a 12-volt battery across the exciter field for 15 - 30 seconds. Proceed as follows:

1. Disconnect the two exciter field leads from voltage regulator terminals F+ and F—. The field leads should be marked F2 and F1. See Figure 7.
2. Disconnect regulator power lead RP1 from voltage regulator.
3. Connect the negative terminal of a 12 volt battery to lead F1.
4. Connect the positive terminal of the battery to lead F2 for a few seconds.
5. Start the engine and bring the unit up to speed.
6. There should be voltage at the alternator output—up to 200 volts AC line-to-line, more or less. If there is still no voltage, contact your local factory representative.
7. If voltage is now present, shut down the unit, disconnect the battery and connect the exciter field to the voltage regulator, F2 to F+ and F1 to F—.
8. Reconnect power lead RP1.
9. Start up the engine and bring it up to speed; check output voltage.

FIGURE 7

CAUTION! Exercise extreme caution at all times. Insulate or isolate all AC leads. They are extremely hazardous. Do NOT touch them or allow them to touch anything!

Approximate AC output voltage using 12 volt DC battery as exciter field power.

35LR1	200 VAC
45LR1	200 VAC
55 LR1	200 VAC

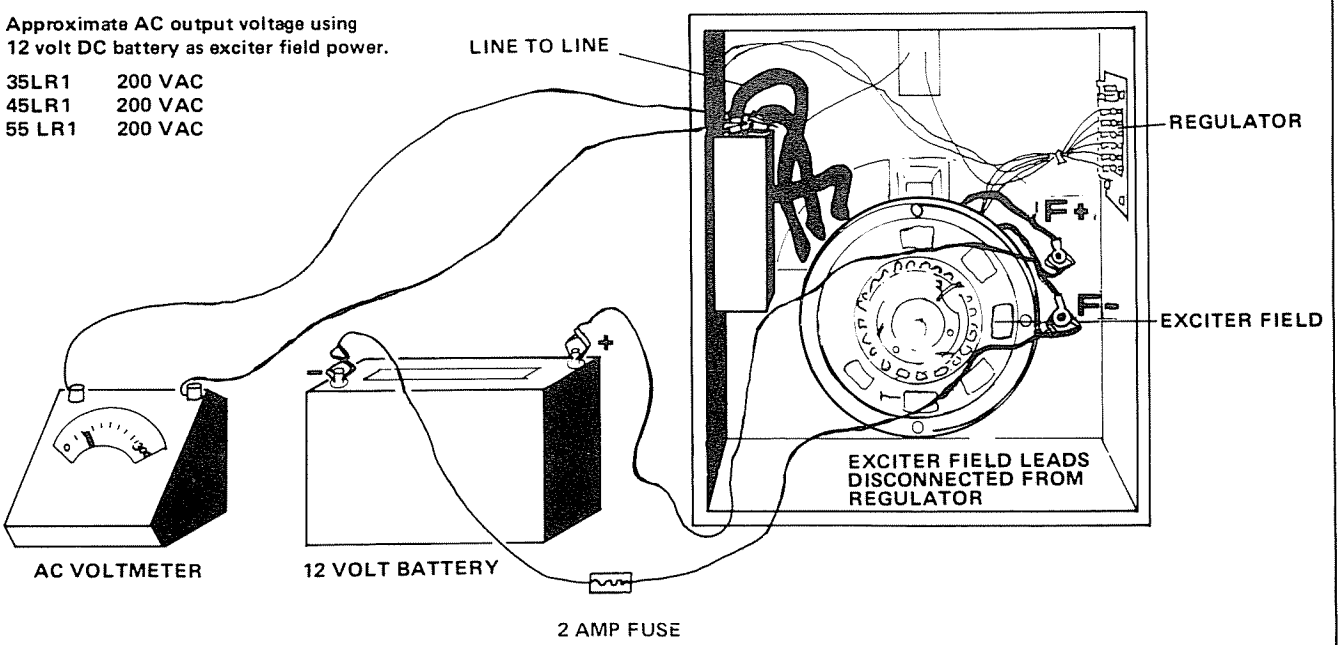

MECHANICAL SERVICE AND MAINTENANCE

CLEANING

Do not permit ventilating ports to become clogged. Clean periodically.

REPLACING BEARINGS

Replacement bearings must be of the same size as originally installed at the factory. These procedures must be followed.

1. If the bearing requires replacement, the terminal box and alternator endbell must be removed. In order to accomplish this, wiring within terminal box must be disconnected.

2. Replacement must be positioned on the shaft so that bearing inner ring is against the bearing shoulder on the shaft.

3. Bearings should be removed with a puller that applies pressure to the bearing inner ring.

4. Bearings are a press fit on the shaft. Replacement bearing should be heated to +220° to +250° F. in a clean, temperature controlled oven before attempting to install them on the alternator shaft.

5. A replacement bearing should be installed on the shaft while it is hot as described above. A sleeve or pipe that applies pressure to the bearing inner ring may be used to tap the bearing into place on the shaft. The sleeve or pipe should never exert pressure on the bearing outer ring.

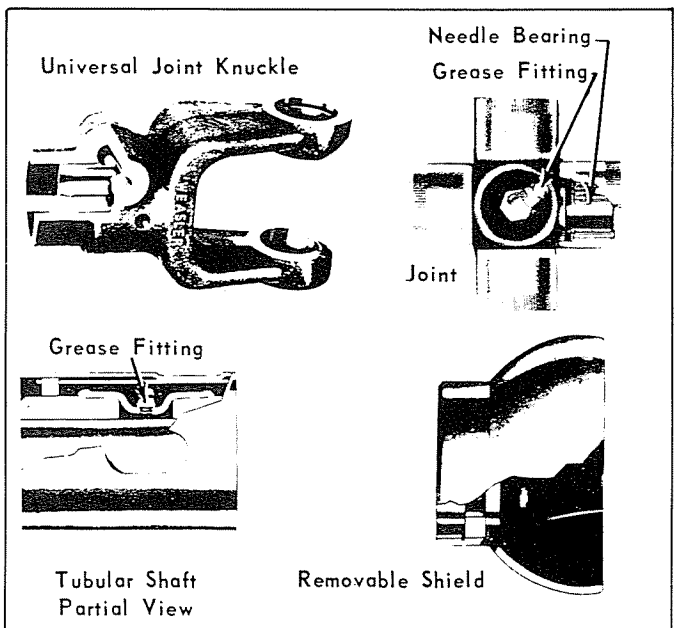

FIGURE 8 POWER TAKE-OFF SHAFT MAJOR PARTS

ALTERNATOR DISASSEMBLY AND ASSEMBLY

Disassembly of alternator can be accomplished by following these steps.

1. Refer to cutaway drawing for location of parts.

2. Remove bolts securing gear cases to alternator. Carefully remove gear case from shaft. A jaw type puller may be required on older units.

3. Disconnect leads within alternator terminal box. Remove bolts holding terminal box to alternator.

4. Remove bolts holding endbells to alternator frame and stator assembly. Pull endbells.

5. Remove exciter armature by disconnecting leads. (Carefully cut ties holding leads to exciter armature windings).

6. Generator rotor can be removed from fan end without removing fan.

7. Do not remove exciter field from endbell unless it is to be replaced.

8. Do not remove bearings if they do not require replacement.

Assembly of the alternator can be accomplished by following these steps:

1. If new bearings are to be installed refer to preceeding paragraphs titled Replacing Bearings.

2. If exciter field assembly was removed from end bell, install exciter field with lead wires toward endbell.

3. Slide alternator rotor into stator assembly.

4. Install endbells.

5. Install terminal box and reconnect wires. Refer to electrical diagrams contained in the Installation Section of this manual.

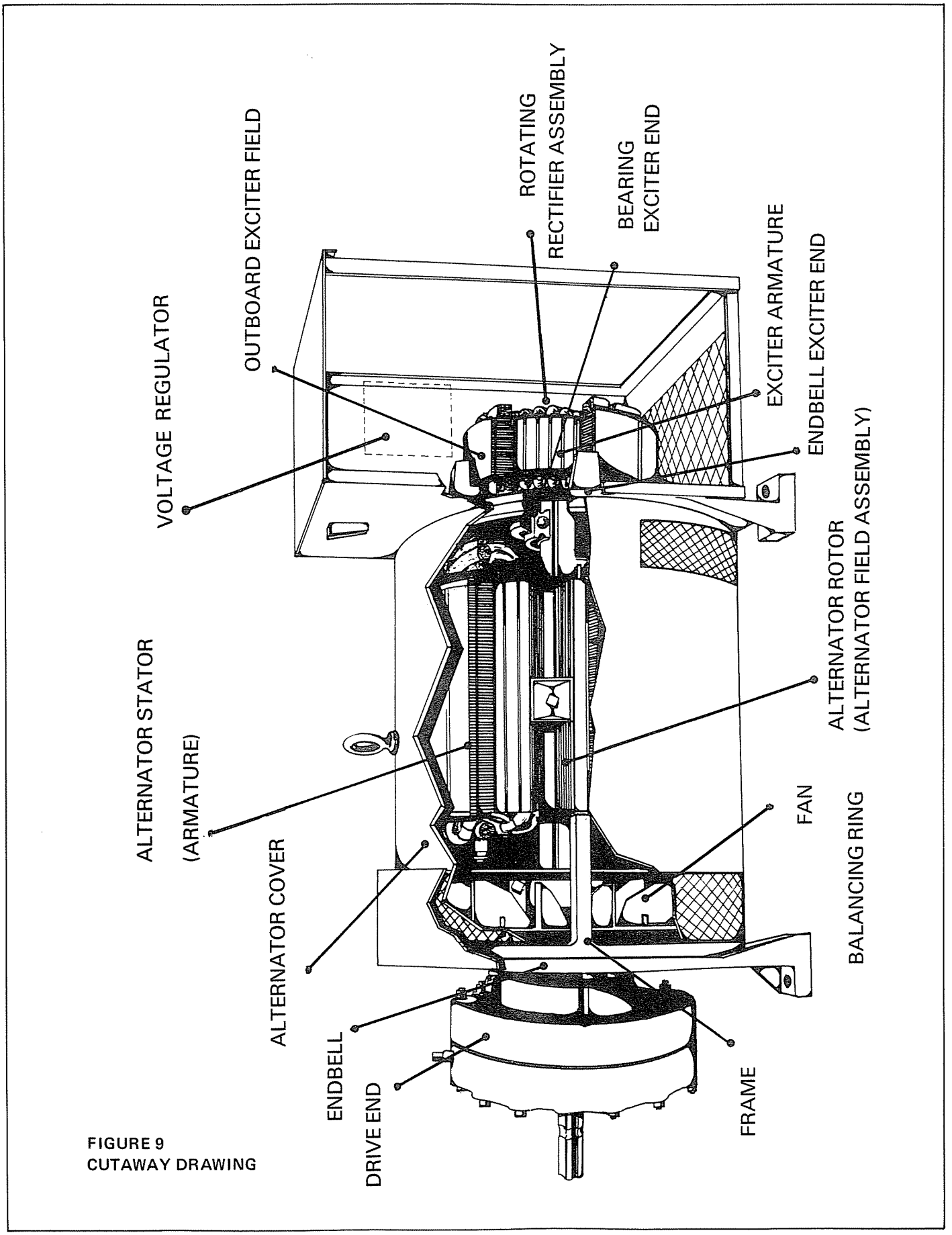

FIGURE 9
CUTAWAY DRAWING

LOCATING TROUBLE

If the alternator does not appear to be producing voltage, check the load circuit breakers or fuses. If a circuit breaker is tripped, reduce the load and reset the breaker. If fuses are blown, replace the fuses. A common cause of poor alternator operation is underspeed. High voltage can be caused by overspeed. Speed can be easily checked with a frequency meter or tachometer.

The following Troubleshooting Chart lists various symptoms of poor alternator operation, possible causes and means of correcting deficiencies.

TABLE D
TROUBLESHOOTING CHART

SYMPTOM	POSSIBLE CAUSE	POSSIBLE REMEDY
No Output Voltage.	Engine Speed too low.	Increase speed until alternator produces 60 cycles.
	Short Circuit in load.	Disconnect load. Check motors, appliances and load leads for short circuit.
	Open fuse on voltage regulator.	Check section of foil on back side of voltage regulator marked "FUSE". If burned open install one piece of no. 34 wire across the burned open section of foil. Solder wire to foil, use care not to overheat when soldering.
	Defective receptacles.	Remove terminal box cover and test with test light.
	Loose terminal connections or shorted lead wires in control box.	Remove terminal box cover. Check terminal connections. Check for bare wires.
	Open fuses or circuit breakers.	Replace fuses. Reset circuit breakers.
	Voltage regulator defective.	Contact KATOLIGHT CORPORATION Sales and Service Office—Mankato, MN.
	Open or short circuited leads.	Remove alternator cover and check exciter field leads. Check leads from exciter armature to rotating rectifiers and alternator field coils. Make certain the tie down lacing holding exciter leads to shaft is securely wrapped and tied before placing unit back in operation.
	Open or shorted voltage adjust rheostat.	Check rheostat.
	Open or short circuited exciter field coils exciter armature windings, alternator field coils or alternator stator windings.	Consult KATOLIGHT CORPORATION Sales and Service Office—Mankato, MN.

continued

CONTINUED

TABLE D
TROUBLESHOOTING CHART CONTINUED

SYMPTOM	POSSIBLE CAUSE	POSSIBLE REMEDY
Low Voltage	Engine speed too low.	Increase engine speed until alternator produces 60 cycle output.
	Voltage adjust rheostat not properly adjusted.	Adjust to rating.
	Alternator Overloaded.	Reduce load to rated value. Make certain alternator is not overloaded by unbalanced load.
	Short circuit in load.	Remove load. Check appliances and motors for point of short circuit.
	Defective voltage regulator or rotating rectifiers.	Consult KATOLIGHT CORPORATION Sales and Service Office –Mankato MN if voltage regulator is defective. Test rotating rectifiers.
High Voltage	Engine speed too high.	Decrease engine speed until alternator produces a 60 cycle output.
	Voltage adjust rheostat not set correctly.	Adjust to proper voltage.
	Defective voltage regulator.	Contact KATOLIGHT CORPORATION Sales and Service Office–Mankato MN.
Poor Voltage Regulation	Load in excess of alternator rating	Reduce load. Check nameplate rating.
	Wrong alternator speed or defective regulator.	Correct speed. Replace Regulator.
Continuous Voltage fluctuation	Engine speed not constant	Engine may not have enough power or engine governot may be worn or improperly adjusted. Set or repair defective governor.
	Defective Regulator.	Replace Regulator.
Vibration & Noise	Defective bearings	Replace bearings
	Gearbox dry or overfilled.	Check gearbox oil level.
	Power take-off misalignment excessive or universal joint dry or worn.	Correct defects. Refer to Operation section of this manual for alignment procedures.
	Loose mounting bolts	Check or tighten as necessary

PARTS ORDERING INSTRUCTIONS

To avoid errors or delay in filling your parts order:

1. Always give SERIAL NUMBER, and MODEL NUMBER.
2. Give the item part number and description. Give the quantity required of each item. DO NOT ORDER BY REFERENCE NUMBER OR GROUP NUMBER. If an old part cannot be identified return the part POSTAGE PREPAID to your distributor or KATOLIGHT CORPORATION. Write a letter to the same address stating the reason for returning the part.

Five Year P.T.O. Driven Alternator Limited Warranty

KATOLIGHT warrants to the original purchaser that the product delivered herewith, so far as it has been manufactured, engineered or assembled by KATOLIGHT, is free from defects in material and workmanship, and will perform under normal standby use and service for a period of five years from date of shipment from KATOLIGHT.

KATOLIGHT liability under the warranty specified herein shall be limited to the replacement or repair of the product, at the option of KATOLIGHT, or its authorized service station. This warranty does not apply to accessories supplied, but not manufactured by KATOLIGHT, which in such cases, the original equipment manufacturer's warranty will be applicable. This warranty does not obligate KATOLIGHT to bear the cost of labor or transportation charges in connection with the repair or replacement of defective products, nor shall it apply to a product upon which modifications, repairs or alterations have been made. This warranty shall apply only when the equipment or product has been properly installed, serviced and operated under normal standby conditions, in accordance with the instructions provided for the specific units.

KATOLIGHT shall not be liable for any claim greater in amount than the purchase price of the product, in respect of which such claim is made, and in no event shall KATOLIGHT be liable for any special, indirect or consequential damages.

THERE ARE NO EXPRESS WARRANTIES OTHER THAN THOSE DESCRIBED HEREIN. NO WARRANTIES SHALL BE IMPLIED OR OTHERWISE CREATED UNDER THE UNIFORM COMMERCIAL CODE, INCLUDING, BUT NOT LIMITED TO, A WARRANTY OF MERCHANTABILITY, AND A WARRANTY OF FITNESS FOR A PARTICULAR PURPOSE.

Form WV-879

Katolight - LR
Tractor Drive

Generator Code	No Load			Full Load - (1.0 PF)			Ohms at 25 Deg C		
	KW	Exciter		KW	Exciter		Resistance Stator Line	Rotating Field	Resistance Exciter Field
		Volts	Amps		Volts	Amps			
25LR1 4P1-0400	20 KW	18	.3	20 KW	47	.80	.126	5.34	58
35LR1 4P1-0638	30 KW	18	.3	30 KW	35	.60	.077	2.68	58
45LR1 4P1-0800	40 KW	22	.3	40 KW	48	.65	.040	3.08	73
55LR1 4P1-1000	50 KW	22	.3	50 KW	62	.85	.0311	2.17	73
85LR1 4P2-0850	75 KW	20	.3	75 KW	39	.60	.0185	3.70	65

OPERATING INSTRUCTIONS SERVICE INFORMATION and PARTS BOOK

KATOLIGHT

ELECTRA PTO TRACTOR DRIVEN ALTERNATOR

MODELS

150S-250S

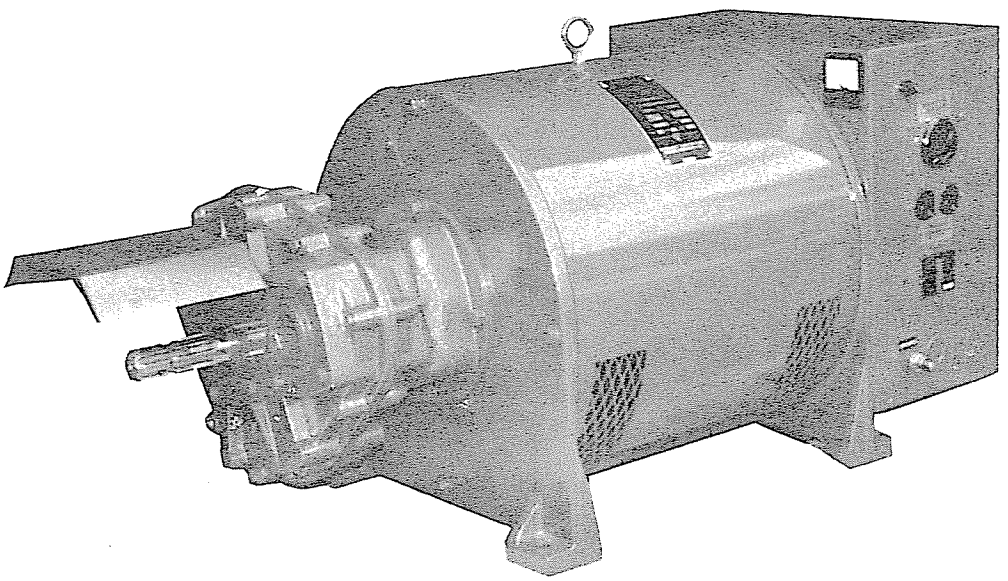

NOTICE

READ THIS BOOK BEFORE OPERATING THE POWER SYSTEM AND SAVE FOR FUTURE REFERENCE.

WRITE THE MODEL NUMBER, TYPE NUMBER AND SERIAL NUMBER OF THE ALTERNATOR IN THE FOLLOWING SPACES. BE SURE TO GIVE THESE NUMBERS WHEN ORDERING PARTS.

ALTERNATOR MODEL _____ TYPE _____ SERIAL _____

KATOLIGHT®
3201 THIRD AVE./MANKATO, MINNESOTA/56001
TELEPHONE (507) 625-7973

Form No. AD4/4-1075

Printed in U.S.A.

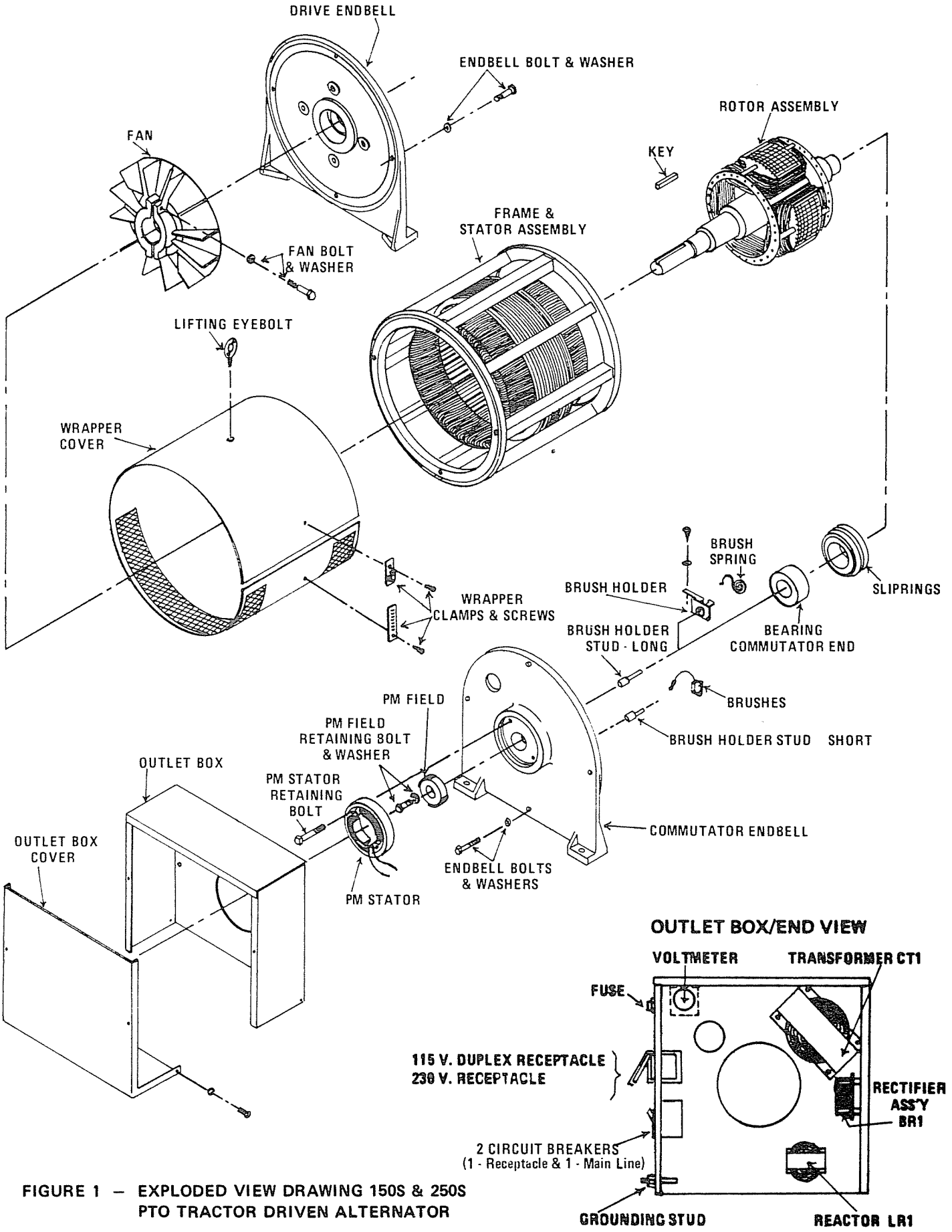

FIGURE 1 – EXPLODED VIEW DRAWING 150S & 250S PTO TRACTOR DRIVEN ALTERNATOR

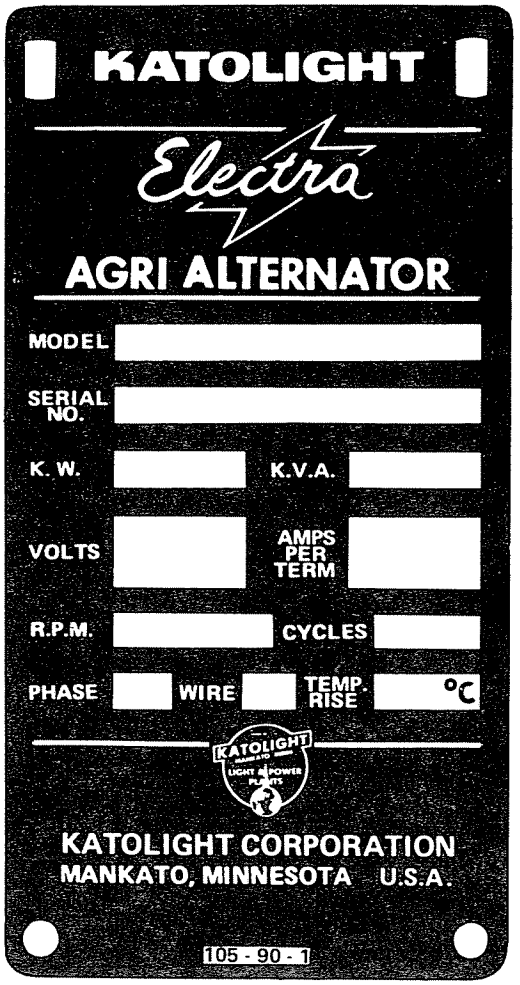

ALTERNATOR DATA

The alternators described in this manual are single phase, 120/240 volt, 60 cycle, 1800 RPM machines. They are of the revolving field type with a static exciter voltage regulator. The alternator includes a line current operated excitation boost circuit which increases excitation proportional to increases in load. This feature provides excellent motor starting capabilities and provides sufficient current to trip breakers should a sustained short in the load or customers service lines occur.

Standard equipment includes the alternator and exciter/voltage regulator, a gear increaser, protective shield, an output circuit breaker, a fused 120 volt duplex receptacle, a 240 volt receptacle and a voltmeter.

Important data pertinent to your alternator is given on the nameplate attached to the alternator. For handy reference, copy the information from the alternator nameplate into the sample nameplate above. See Page 5 for "Operation Instructions".

TABLE OF CONTENTS

Figure 1 - Exploded View Drawing
PTO Tractor Drive Alternators i
Alternator Data ii
Table of Contents ii

GENERAL INFORMATION

Introduction 1
Parts Ordering Instructions 1
Location 1
Periodic Operation and Inspection of Standby Alternators 1
Determining Load 2
Use of Electric Motors 2

INSTALLATION

Mounting Alternator 2
Gear Box Lubrication 2
Connecting Alternator to Load 2

OPERATING INSTRUCTIONS

Precautions Prior to Initial Start 3
Aligning Alternator with Tractor Power Take-off 3
Operating Alternator 3

SERVICE & MAINTENANCE

Cleaning 4
Gearbox Lubrication 4
Power Take-off Shaft Lubrication 4
Bearing Lubrication 4
Replacing Bearings 4
Maintenance of Brushes and Sliprings 4
Restoring Residual Magnetism 5
Testing Rectifier Assembly BR1 5
Alternator Disassembly and Assembly ..... 5 & 6

TROUBLESHOOTING

Locating Trouble 6
Troubleshooting Chart ..... 6 & 7
Figure 7 - Wiring Diagram PTO Tractor Drive Alternators 8

GENERAL INFORMATION

INTRODUCTION

Before any Katolight Power Take-Off Driven Alternator is shipped from the factory, it is inspected and tested for performance. No unit is shipped unless it produces its rated capacity. When unpacking the machine, inspect it carefully making certain no damage occurred in transit. If damage is noted, notify the transportation company immediately, giving complete details as to the nature of the damage. Units are generally shipped with lubrication in the gearbox. Before placing power system in operation, check to make sure that the lubrication is in gearbox. IF NOT, fill VonRuden gearbox with 1¼ pints (1¼ lbs.) EP90 gear oil. Fill "Apex" gearbox with 2½ pints (2¼ lbs.) EP90 gear oil. Maintain oil level slightly below check plug.

If upon installation a new alternator does not work properly, check all electrical connections and the alternator speed before concluding the alternator is defective. Check name-plate for correct operating speed. Observe the following precautions whenever operating your Power Take-Off Driven Alternator.

CAUTION

DISENGAGE PTO WHENEVER TRACTOR IS IDLING. RUNNING ALTERNATOR UNDER SPEED COULD RESULT IN DAMAGE TO VOLTAGE REGULATOR AND ALTERNATOR.

PROVIDE SUFFICIENT VENTILATION. DO NOT OPERATE TRACTOR IN ENCLOSED AREA. EXHAUST GASES CONTAIN CARBON MONOXIDE, AN ODER—LESS, DEADLY POISON.

STOP TRACTOR BEFORE FILLING WITH GASOLINE. AVOID SPILLING GAS ON HOT ENGINE, A FIRE AND SERIOUS INJURY COULD OCCUR.

IN APPLICATIONS WHERE ALTERNATOR IS CON—NECTED TO SERVICE NORMALLY SUPPLIED BY COMMERCIAL POWER, INSTALL A TRANSFER SWITCH. FAILURE TO OBSERVE THIS PRECAUTION COULD RESULT IN ELECTROCUTION OF PERSONNEL SERVICING COMMERCIAL POWER LINES.

AVOID EXPOSURE TO ALTERNATOR VOLTAGE. WHENEVER MAKING ELECTRICAL CONNECTIONS OR REPAIRING THE ALTERNATOR, FIRST STOP THE TRACTOR. FAILURE TO OBSERVE THIS PRECAUTION COULD RESULT IN ELECTROCUTION.

PARTS ORDERING INSTRUCTIONS

To avoid errors or delay in filling your parts order, please furnish the following information:

1. Always give MODEL NUMBER, TYPE NUMBER and SERIAL NUMBER.

2. If an old part cannot be identified, return the part postage prepaid to your distributor or KATOLIGHT CORPORATION. Write a letter to the same address stating the reason for returning the part.

LOCATION

Provide sufficient ventilation. Do not operate tractor driven alternator in an enclosed area.

For best service the following factors should be taken into consideration:

1. Dirt: Foreign material such as dust, lint and abrasive particles cause excessive wear of bearings, brushes, and sliprings. Dirt also will clog ventilating ports causing overheating of the alternator.

2. Moisture: All electrical equipment should be protected from excessive moisture. Excessive moisture could result in short circuits and grounds.

If the alternator is to be left in the open, it should be covered whenever it is not in use. Ventilating ports should be cleaned periodically.

PERIODIC OPERATION AND INSPECTION OF STANDBY ALTERNATORS

Alternator should be operated and inspected occasionally to keep them in good operating condition.

About once every four months start the unit and bring up to rated speed. Apply load and check voltmeter reading. Run unit about ½ hour with some load applied. See "Operation Instructions".

At least once a year remove alternator cover and outlet box cover. Clean inside of alternator and outlet box with 25 to 50 psi compressed air. Check all wire connections, Check for broken wires and frayed insulation.

At least once a year check condition of brushes and sliprings. Clean if dirty. Replace brushes if worn excessively. Refer to Page 4, "Maintenance of Brushes and Sliprings".

DETERMINING THE LOAD

The load can be determined by adding the wattage requirements for each light, appliance and motor that will be operated by the power system. The following chart lists approximate watts required for various electrical appliances.

APPROXIMATE WATTS REQUIRED FOR ELECTRICAL APPLIANCES

APPLIANCE	WATTS
Lamp Bulbs	See Wattage on bulbs
Radio	40 - 200
Television	150 - 300
Vacuum Cleaner	200 - 250
Automatic Washer	400
Air Conditioner (¾ Ton)	1,250
Refrigerator	325
Food Freezer	300
Furnace (Oil)	700
Deep Well Pump	2,000
Electric Range	600 - 10,000
Hot Plate (per burner)	600 - 1,200
Toaster	600 - 1,130
Water Heater	1,500 - 5,000
Glow Heater	600 - 1,200
Heating Pad	40 - 80
Sun Lamp	250 - 1,000
Flat Iron	600 - 1,200
Laundry Dryer	4,750
Electric Heat System	5,000 - 20,000

USE OF ELECTRIC MOTORS

Electric motors require much more current to start than to run. Most fractional horsepower motors take about the same amount of current to run them whether they are of the Repulsion-Induction, Capacitor or Split-Phase type. Starting current however, varies greatly. Replusion-Induction motors are the easiest to start and usually require 1½ to 2½ times as much current to start as to run them. Capacitor motors usually require 2 to 4 times as much current to start them as to run them. Split-Phase motors are hardest to start with starting current about 5 to 7 times the running current.

NOTE

IN APPLICATIONS WHERE SEVERAL MOTORS ARE TO BE STARTED EXCESSIVE OVERLOAD MAY BE AVOIDED BY STARTING THEM ONE AT A TIME, STARTING THE MOTOR THAT REQUIRES HIGHEST RUNNING AND STARTING CURRENT FIRST.

RUNNING LOAD					STARTING
HP	KW	KVA	AMPERES		INRUSH
			115 V.	230 V.	KVA
1/4	.29	.53	4.6	2.3	3.45
1/3	.45	.75	6.5	3.25	4.15
1/2	.60	.92	8.0	4.0	5.75
3/4	.86	1.32	11.5	5.75	7.0
1	1.05	2.1	18.0	9.0	11.5
1.5	1.57	2.1	18.0	9.0	11.5
2	2.05	2.55	22.2	11.1	15.0
3	3.1	3.7	32.0	16.0	20.7
5	4.6	5.1	43.0	21.5	31.0
7.5	7.0	7.8	68.0	34.0	46.0

DATA FOR SINGLE PHASE MOTORS TO NEMA STANDARDS

INSTALLATION

MOUNTING ALTERNATOR

The alternator must be solidly bolted to a foundation, platform, or bed of a trailer. All four feet on the alternator must contact the foundation or trailer bed. If space exists between a mounting foot and the foundation or trailer, first install shims to take up space and then install and tighten bolts.

GEARBOX LUBRICATION

Check oil level. If not full, fill with EP 90 Gear Oil. Maintain oil level slightly below check plug. **DO NOT OVERFILL.** Overfilling will cause heating and possible seal failure.

CONNECTING ALTERNATOR TO LOAD

Load can be taken from receptacles, a cord set or by connecting the alternator into an existing service.

Load taken from receptacles should not exceed receptacle rating and should never exceed alternator rating. The 120 volt duplex receptacle is rated 20 amperes while the 240 volt receptacle is rated 50 amperes.

When the alternator is connected into an existing service normally supplied by commercial power a transfer switch must be used.

All loads that are not taken from 240 volt and 120 volt receptacles must connect to output side of alternator circuit breaker (lines L1 & L2) and neutral line to ground stud shown on wiring diagram page 8.

OPERATING INSTRUCTIONS

PRECAUTIONS PRIOR TO INITIAL STARTING

Before starting the alternator for the first time the unit should be inspected as follows:

1. Check electrical connections to load. Refer to the electrical connection diagrams.

2. Remove cover surrounding alternator. Turn rotor manually and visually inspect for sufficient clearance between rotating and stationary parts.

3. Check gear box oil level.

ALIGNING ALTERNATOR WITH TRACTOR POWER TAKE-OFF

The double universal joint construction of the power take-off drive shaft allows for considerable angular misalignment between the gearbox and the tractor power take-off shaft. As shown in Figure 2 the angular misalignment of the universal joints if at all possible should not be more than 15 degrees. If the power take-off drive shaft is taken apart make certain the drive shaft universal joint knuckles are in time with one another as shown in Figure 3. If the drive shaft universal joint knuckles are not in time; chattering will occur which will cause a flicker in the electrical output. The same flicker will also occur if the angle of the drive shaft from the alternator to the tractor power take-off is more than 15 degrees. Make certain the power take-off shaft shields are installed before operating the unit.

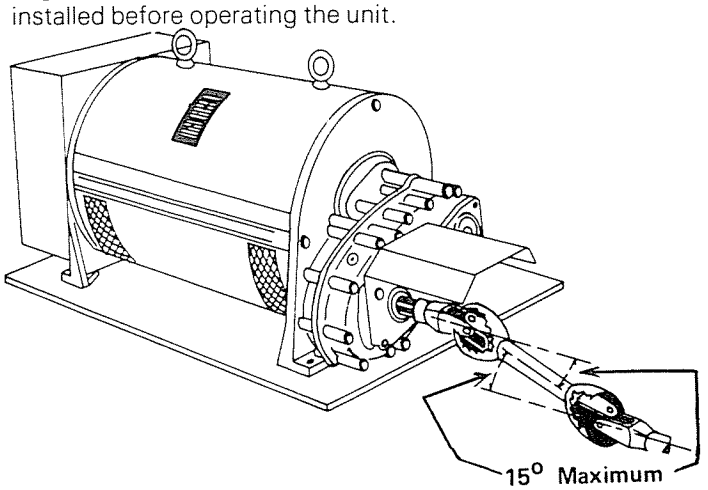

FIGURE 2 TRACTOR DRIVE ALTERNATOR CONNECTED TO TRACTOR POWER TAKE—OFF

OPERATING ALTERNATOR

1. With no load applied, start unit and bring tractor speed to point where the voltmeter needle is at 230 volts. (NOTE: if alternator does not appear to be generating voltage, then with unit running, flash field to restore residual magnetism as described on page 5.)

2. If alternator does not have frequency meter, then, with no load applied set throttle to point where the voltmeter reads 230 volts and observe tractor tachometer readings. The above tachometer reading is speed at which alternator frequency is about 60 cycles.

3. Apply load. Do not permit tractor speed to drop below alternator frequency of 60 cycles.

NOTE

If alternator is supplying power to large motors, it may be advantageous to operate at speed slightly higher than 60 cycles but not over 63 cycles. 63 cycles would be a tachometer reading 5 percent higher than observed in Step 2.

CAUTION

DO NOT OPERATE OVER 63 CYCLES OR UNDER 60 CYCLES. DO NOT IDLE TRACTOR WITH PTO ENGAGED.

CONTROL ALTERNATOR FREQUENCY AND VOLTAGE BY KEEPING SPEED CONTROLLED (WITHIN ABOVE RANGE). DO NOT ATTEMPT TO CONTROL ALTERNATOR BY KEEPING VOLTAGE CONSTANT. IF VOLTAGE IS MORE THAN 264, MAKE CERTAIN SPEED IS NOT TOO HIGH. (OVER 63 CYCLES). (This is because speed controls frequency, while changes in voltage are caused by both changes in speed and changing load.)

IF VOLTAGE IS LESS THAN 216, MAKE CERTAIN THAT EITHER SPEED IS NOT TOO LOW OR ALTERNATOR IS NOT OVERLOADED.

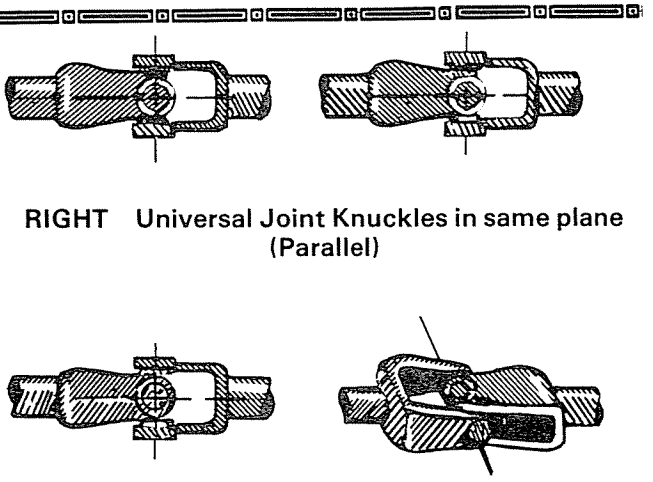

RIGHT Universal Joint Knuckles in same plane (Parallel)

WRONG Universl Joint Knuckles NOT in same plane (NOT Parallel)

FIGURE 3 ALIGNING POWER TAKE-OFF SHAFT UNIVERSAL JOINTS FOLLOWING DISASSEMBLY AND REASSEMBLY OF POWER TAKE-OFF SHAFT

CLEANING

Do not permit ventilating ports to become clogged. Clean ventilating ports and inside of alternator using compressed air at a pressure of 25 to 50 PSI. Periodically clean brushes and sliprings. See "Periodic Operation and Inspection of Standby Alternators", page 1.

GEARBOX LUBRICATION

Periodically check level of oil in gear box. Maintain oil level slightly below check plug. Use EP 90 Gear Oil.

POWER TAKE-OFF SHAFT LUBRICATION

Periodically lubricate power take-off shaft. Location of grease points are shown in Figure 4.

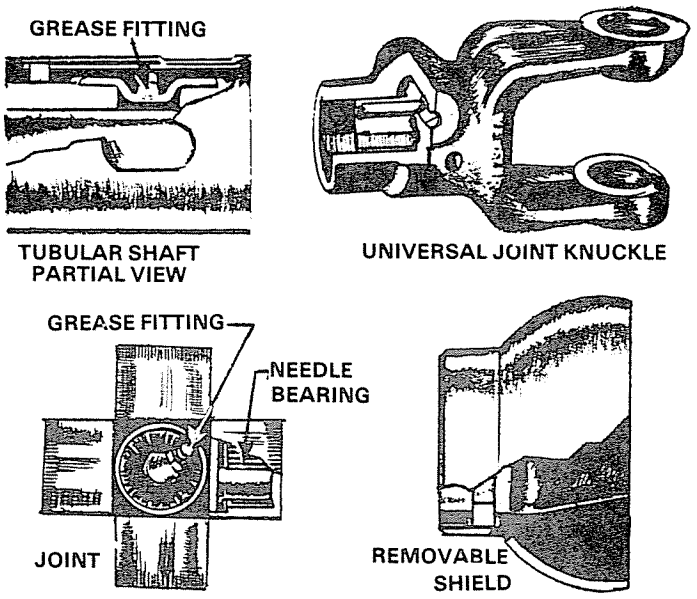

FIGURE 4 POWER TAKE-OFF SHAFT MAJOR PARTS

BEARING LUBRICATION

Bearings installed in the models listed above are of the shielded ball bearing type. They were factory packed about ½ full of a high quality ball bearing grease. Under normal operating conditions several years of operation can generally be expected before repacking of the bearings is necessary. However, it is difficult to predict bearing or grease life as each application is different. A noisy bearing can be a sign of either a worn bearing or lack of grease.

If bearings are to be repacked, remove shield from bearing and completely clean remaining lubricant from bearing and bearing housing. Carefully inspect bearing for any signs of wear. Repack bearing approximately ½ full using a high quality ball bearing grease. Grease should be capable of withstanding temperatures to +250 degrees F. Where use in cold weather is required, the grease should lubricate satisfactorily at the lowest ambient temperature.

REPLACING BEARINGS

Replacement bearings must be of the same size as originally installed at the factory. The following procedures must be followed:

1. If the rear bearing requires replacement, the terminal box and alternator endbell must be removed. In order to accomplish this, wiring within terminal box must be disconnected.

2. New bearing must be positioned on the shaft so that bearing inner ring is against the bearing shoulder on the shaft.

3. Bearing should be removed with a puller that applies pressure to the bearing inner ring.

4. Bearings are a press fit on the shaft. Replacement bearing should be heated to +220 to +250 degrees F. in a clean, temperature controlled oven before attempting to install them on the alternator shaft.

5. A replacement bearing should be installed on the shaft while it is hot as described above. A sleeve or pipe that applies pressure to the bearing inner ring may be used to tap the bearing into place on the shaft. The sleeve or pipe should never exert pressure on the bearing outer ring.

MAINTENANCE OF BRUSHES AND SLIPRINGS

Periodically, at least once or twice a year, loosen alternator wrapper cover and check condition of brushes and sliprings.

1. Never allow brushes to wear down to where brush spring is not holding brush against slipring. Check by lifting brush slightly and then releasing and observing spring pressing brush against slipring.
2. Check for cleanliness. Sliprings and brushes can be cleaned with a cloth. Small burn marks, pitts or grooves can be removed from sliprings as follows:

   a. Wrap fine sandpaper over wood block.

   b. Stop tractor. Remove alternator cover and outlet box cover.

   c. Make certain no load is applied to circuit breaker or receptacles.

   d. Lift brushes in their holders and lock in raised position with spring against side of brush.

   e. Disconnect F1 and F2 leads at (+) and (-) terminals on rectifier bridge BR1 which is located in alternator outlet box.

   f. Start tractor and bring up to about normal speed.

   g. Hold block with sandpaper cover against sliprings until they are polished.

   h. Stop tractor. Lower brushes. Connect F1 and F2 leads onto rectifier assembly BR1 (See Figure 7, Page 8). Install alternator covers.

RESTORING RESIDUAL MAGNETISM

If alternator will not produce voltage, it may be that the alternator has lost residual magnetism and needs to be flashed. Normally, flashing the alternator field using a 12 or 24 volt battery will restore residual magnetism. Flash as follows:

1. Remove outlet box cover and disconnect F1 & F2 leads at the (+) and (–) terminals on rectifier assembly BR1.
2. Connect lead from (+) terminal on 12 volt battery onto terminal on wire F2.
3. Start unit and bring up to speed but do not apply load.
4. Touch lead from (-) terminal of battery onto the terminal on wire F1. Leave on for a couple seconds and look at aternator voltmeter to see if voltage is building up. If voltage does not appear to be building up, it may be necessary to repeat flashing. If voltage still does not build up, flash with 24 volts by connecting two 12 volt batteries in series as shown in Figure 5.
5. Disconnect battery and reconnect F1 & F2 leads onto (+) and (-) terminals on rectifier BR1. See Figure 7, page 8, for propoer connection.

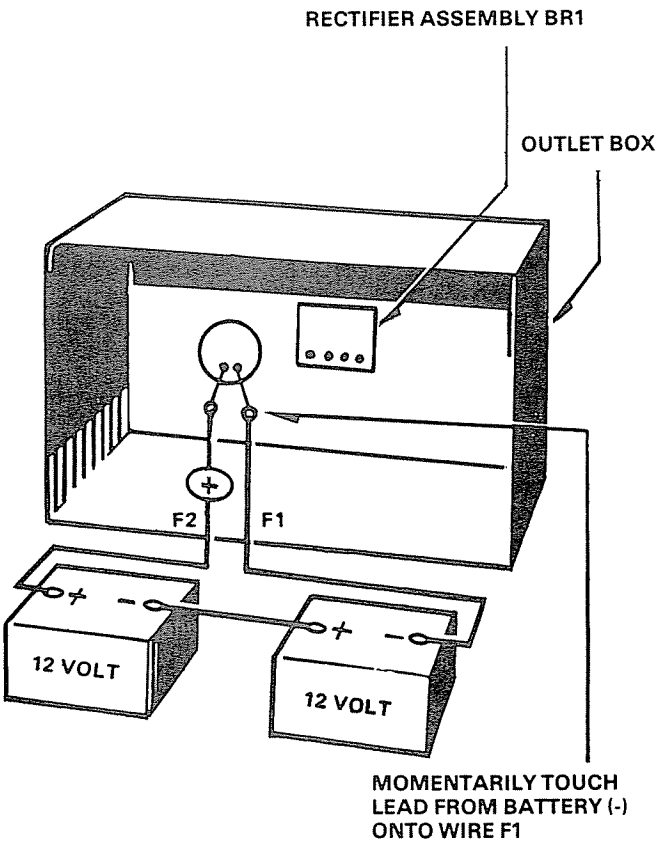

FIGURE 5 FLASHING FIELD USING 24 VOLTS (TWO 12 VOLT BATTERIES IN SERIES)

TESTING RECTIFIER ASSEMBLY BR1

This assembly consists of four diodes and a surge protector which can be tested for open or short circuits with a three volt test light as follows:

1. Stop tractor. Remove outlet box cover and disconnect wires from the two AC terminals and the (+) and (–) te rminals on the rectifier assembly.
2. Touch ends of tester leads together to make certain bulb lights.
3. Test surge protector by checking across AC terminals. Check with (+) lead on one AC terminal and (–) lead on other terminal. Interchange leads to AC terminals. Tester bulb should not light either way.
4. Check diodes as follows: Check with tester leads onto an AC and (+) terminal. Reverse leads from same AC terminal to (+). Light should come on in one direction but should not light when leads are reversed.
5. Repeat Step 4 but with lead from other AC terminal to (+).
6. Check with tester leads onto an AC terminal to (-). Reverse leads across same AC terminal and (-). Light should come on with leads onto AC and (-) terminals in one direction but should not light when they are reversed.
7. Repeat Step 6 but with lead from other AC terminal to (-).

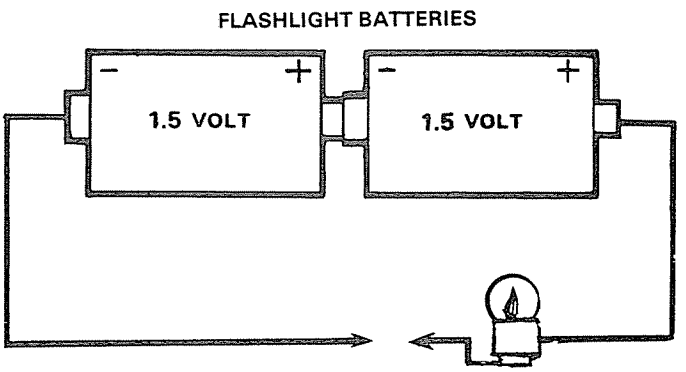

FIGURE 6 THREE VOLT TEST LIGHT

ALTERNATOR DISASSEMBLY AND ASSEMBLY

Disassembly of alternator can be accomplished as follows:

1. Refer to Figure 1, Page i, for part location.
2. Remove lifting eyebolt, alternator cover and outlet box cover.
3. Lift brushes in brush holders and lock them in raised position by placing brush spring against side of brush.
4. Remove bolts securing gear case to alternator. Carefully remove gear case from alternator shaft.

5. Disconnect leads within alternator outlet box. Remove bolts holding outlet box to generator.

6. Remove bolt and washer holding permanent magnet field assembly onto generator shaft. Remove permanent manget field assembly.

7. Remove bolts holding endbells to alternator frame and stator assembly. Pull endbells.

8. Alternator rotor can be removed from fan end without removing fan.

9. Do not remove bearings if they do not require replacement.

Assembly of the alternator can be accomplished as follows:

1. If new bearings are to be installed refer to preceeding paragraphs titled "Replacing Bearings".

2. Slide alternator rotor into stator assembly.

3. Install endbells.

4. Install outlet box. Install parts in outlet box and connect wires as shown on Figure 7, Page 8.

5. Slide permanent magnet field assembly onto alternator shaft. Install permanent magnet field retaining bolt and washer.

6. Lower brushes in brushholders.

7. Install alternator covers and lifting eyebolt.

8. Carefully install gear case.

TROUBLESHOOTING

LOCATING TROUBLE

If the alternator does not appear to be producing voltage, check the load circuit breakers or fuses. If a circuit breaker is tripped, reduce the load and reset the breaker. If fuses are blown, replace the fuses. A common cause of poor alternator operation is underspeed. High voltage can be caused by overspeed. Speed can be easlily checked with frequency meter or tachometer.

The following Troubleshooting Chart lists various symptoms of poor alternator operation as well as possible causes and means of correcting deficiencies.

TROUBLESHOOTING CHART

SYMPTOM	POSSIBLE CAUSE	TEST PROCEDURE AND REMEDY
No Output Voltage	Engine speed too low.	Increase speed until alternator produces 60 cycles.
	Short Circuit in load.	Disconnect load. Check motors, appliances and load leads for cause of short circuit.
	Defective receptacles.	Remove terminal box cover & test with test light.
	Defective permanent magnetic field and / or stator.	Test PM armature (stator) for open or shorted windings. Test PM field for retention of magnetism. If magnetized,PM field should have high magnetic pull or a piece of steel such as a wrench or screwdriver. Replace failed parts.
	Loose terminal connections or shorted lead wires in control box.	Remove terminal box cover. Check terminal connections. Check for bare wires.
	Open fuses or circuit breakers.	Replace fuses. Reset circuit breakers.
	Rectifier Bridge BR1 open or shorted.	Test. Replace if open or shorted.
	Voltage regulator reactor LR1 or transformer CT1 open or shorted.	Consult KATOLIGHT CORPORATION Sales and Service Office - Mankato, Minnesota 56001.
	Short Circuit in load.	Disconnect load. Check motors, appliances and circuit wiring for cause of short circuit.
	Open or short circuited alternator field coils or stator windings.	Contact KATOLIGHT CORPORATION Sales and Service Office - Mankato, Minnesota 56001.

TROUBLESHOOTING CHART CON'T.

SYMPTOM	POSSIBLE CAUSE	TEST PROCEDURE AND REMEDY
Low Voltage	Engine speed too low.	Increase engine speed until alternator produces 60 cycle output.
	Unbalanced load or excessive length of lines or line size too small.	Balanced 120 volt loads evenly. If line drop is excessive reduce length of lines, increase line size to size per code for load amperage.
	Alternator overloaded.	Reduce load to rated value. Make certain alternator is not overloaded by unbalanced load.
	Short circuit in load.	Remove load. Check appliances and motors for point of short circuit.
	Defective rectifier assembly BR1 or transformer CT1 shorted.	Consult KATOLIGHT CORPORATION Sales and Service Office - Mankato, Minnesota 56001 if transformer is defective. Test rectifier assembly.
	Worn or dirty brushes or slipring.	Inspect. Clean with 00 sandpaper if dirty. Replace brushes if worn excessively.
High Voltage	Engine speed too high.	Decrease engine speed until alternator produces a 60 cycle output.
	Unbalanced 120 volt load.	Balance 120 volt loads evenly between L1 and N, L2 and N.
	Reactor LR1 shorted.	Contact KATOLIGHT CORPORATION Sales and Service Office - Mankato, Minnesota 56001.
Poor Voltage Regulation	Load in excess of alternator rating.	Reduce load.
	Low speed.	Increase to 60 cycles-per-second output frequency
	Unbalanced load.	Balance 120 volt loads evenly between L1 and N, L2 and N.
	Defective rectifier assembly BR1.	Test for open or shorts. Replace if defective.
Continuous Voltage Fluctuation	Engine speed not constant.	Engine may not have enough power or engine governor may be worn or improperly adjusted. Set or repair defective governor.
	Improperly connected gear box or PTO drive shaft.	Align PTO drive shaft. Check gearbox for loose mounting bolts and for excess backlash.
Vibration & Noise	Defective bearings.	Replace bearing
	Gearbox dry or overfilled	Check gearbox oil level.
	Power take-off mis-alignment excissive or universal joint dry or worn.	Correct defects. Refer to "Operation" section of this manual for alignment procedures.

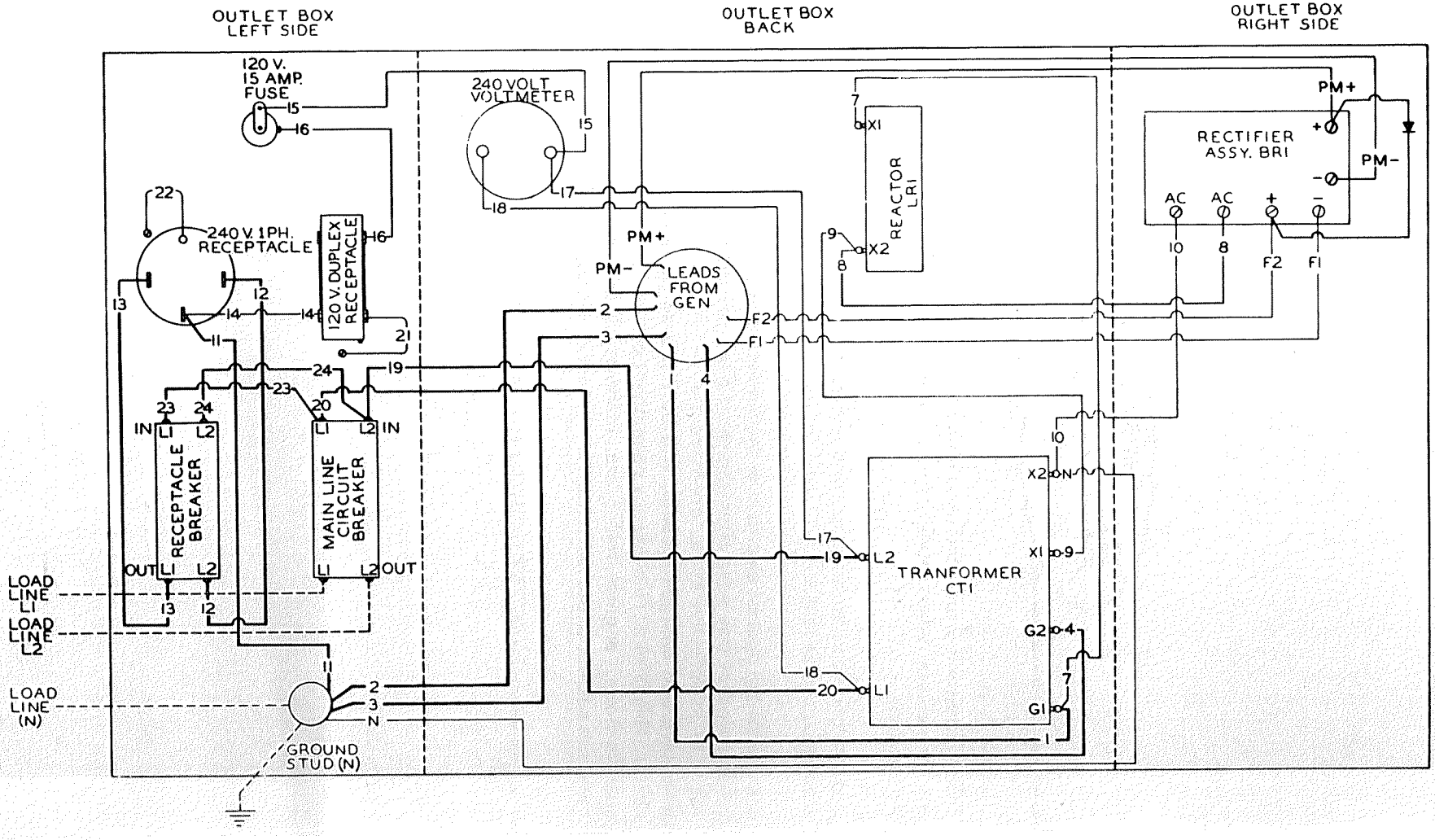

FIGURE 7 – WIRING DIAGRAM, 150S AND 250S PTO TRACTOR DRIVEN ALTERNATOR

Information gathered on a known good unit:

N to L2 .0382Ω	Transformer CT1 X1 to X2 1Ω	Exciter stator PM + to PM – 2.35Ω	Field amps 7
N to L1 .0387Ω	G1 to L1 .25Ω	F1 to F2 field 9.86Ω	Field volts 80
L1 to L2 .0734Ω	G1 to G2 .25Ω	Reactor X1 to X2 .8Ω calculated	

Katolight Service - Master Repair Manual - Page 331

LIMITED Warranty

This alternator is warranted to produce its rated output as stamped on the nameplate when installed and operated in accordance with instructions.

It is warranted to be in good condition electrically and mechanically when leaving the factory.

It is warranted against electrical or mechanical defects in workmanship for a period of one year after shipment from the factory. Any parts found to be defective by factory inspectors after return to the factory, transportation charges prepaid, will be replaced or repaired free of charge. This does not include any component part or standard accessory such as meters, engines, relays, etc., made by other manufacturers, as these are subject to the warranties of those manufacturers.

KATOLIGHT CORPORATION



OPERATING & SERVICE MANUAL
FOR

KATOLIGHT

PTO TRACTOR DRIVEN
BRUSHLESS GENERATORS

MODELS

12TD-1 18TD-1 25TD-1

37TD-1 50TD-1

FARM POWER DIVISION

KATOLIGHT *CORPORATION* MANKATO, MINNESOTA, U.S.A.

TD50S-369

IMPORTANT NOTICE

This manual includes information pertaining to installing, operating and servicing your generator.

READ THE INSTRUCTIONS CONTAINED IN THIS MANUAL AND FOLLOW THEM CAREFULLY WHEN INSTALLING AND OPERATING THE GENERATOR. THE ITEMS CONTAINED IN THE FOLLOWING CAUTION NOTE ARE ESPECIALLY IMPORTANT.

——— CAUTION ———

THE GENERATOR MUST BE RUN AT 1800 RPM GENERATOR SHAFT SPEED OR THE OUTPUT FREQUENCY WILL NOT BE 60 CPS. EITHER UNDERFREQUENCY (UNDERSPEED) OR OVERFREQUENCY (OVERSPEED) COULD RESULT IN POOR OPERATION OF MOTORS OPERATING FROM THE GENERATOR. PROCEDURES FOR CHECKING TO MAKE CERTAIN GENERATOR IS OPERATING AT 1800 RPM. 60 CPS ARE CONTAINED IN PARAGRAPHS 2.7, 2.8 AND 2.9.

ALTHOUGH SET AT THE FACTORY (115/230 VOLTS AT 60 CPS), THE FREQUENCY AND VOLTAGE SHOULD BE CHECKED DURING INITIAL OPERATION OF THE GENERATOR SET IN ORDER TO MAKE CERTAIN THE VOLTAGE ADJUST- RHEOSTATS AND VOLTAGE FREQUENCY INDICATOR LIGHT POTENTIOMETER HAS NOT BECOME OUT OF ADJUSTMENT DURING SHIPMENT. SEE PARAGRAPH 2.4. SHOULD ADJUSTMENT OF THE VOLTAGE ADJUST RHEOSTAT OR VOLTAGE - FREQUENCY INDICATOR LIGHT BE NECESSARY REFER TO PROCEDURES OUTLINED IN PARAGRAPHS 2.6 AND 2.7. IF THE VOLTAGE ADJUST RHEOSTATS AND VOLTAGE FREQUENCY INDICATOR LIGHT POTENTIOMETER REQUIRES ADJUSTMENT, LOOSEN LOCK-NUT BEFORE TURNING POTENTIOMETER OR RHEOSTAT SHAFT. RE-TIGHTEN LOCK-NUT AFTER MAKING ADJUSTMENTS TO PREVENT RHEOSTATS AND POTENTIOMETER FROM VIBRATING OUT OF ADJUSTMENT.

MAKE CERTAIN LOAD DOES NOT EXCEED RATING OF GENERATOR AND MAKE CERTAIN LOAD CONNECTED TO THE RECEPTACLES OR CORD SET DOES NOT EXCEED THEIR RATINGS. SEE PARAGRAPH 1.7.

MAKE CERTAIN THE POWER TAKE-OFF SHAFT UNIVERSAL JOINTS ARE ALIGNED WITHIN LIMITS. REFER TO PARAGRAPH 2.2. MAKE CERTAIN GEARBOX IS LUBRICATED. REFER TO PARAGRAPH 1.3.

TABLE OF CONTENTS

SECTION 1 INSTALLATION

	Paragraph	Page
INSPECTING GENERATOR BEFORE ACCEPTING SHIPMENT	1.1	1
MOUNTING GENERATOR	1.2	1
GEARBOX LUBRICATION	1.3	1
GENERATOR BEARING LUBRICATION	1.4	1
ELECTRICAL CONNECTIONS	1.5	1
DETERMINING THE LOAD	1.6	1
OBTAINING LOAD FROM 115 & 230 VOLT RECEPTACLES OR 230 VOLT CORD SET	1.7	1
STORING GENERATOR BETWEEN USE	1.8	2
TABLE A TYPICAL APPLIANCE LOADS		2
TABLE B SINGLE PHASE MOTOR LOADS		2
FIGURE 1-1 ELECTRICAL CONNECTION DIAGRAM, SINGLE PHASE, 4 WIRE, FOR 120/240 VOLT TD-1 SERIES AC GENERATOR		3
FIGURE 1-2 ELECTRICAL CONNECTION DIAGRAM, 12 WIRE GENERATOR, ONE PHASE CENTER TAPPED FOR SINGLE PHASE POWER		4

SECTION 2 OPERATION

CONNECTING GENERATOR TO LOAD	2.1	5
ALIGNING GENERATOR WITH TRACTOR POWER-TAKE-OFF	2.2	5
CHECKS TO BE MADE BEFORE STARTING GENERATOR	2.3	5
INITIAL START - GENERATOR USED FOR FIRST TIME	2.4	5
FIGURE 2-1 TRACTOR DRIVE GENERATOR CONNECTED TO TRACTOR POWER-TAKE-OFF		5
FIGURE 2-2 ALIGNING POWER-TAKE-OFF SHAFT UNIVERSAL JOINTS FOLLOWING DISASSEMBLY & REASSEMBLY OF THE POWER-TAKE-OFF SHAFT		5
NORMAL OPERATING	2.5	6
VOLTAGE ADJUSTMENT	2.6	6
COMBINATION VOLTAGE AND FREQUENCY INDICATOR LIGHT	2.7	6
CHECKING GENERATOR SPEED (FREQUENCY) WITH HAND TACHOMETER	2.8	7
CHECKING GENERATOR FREQUENCY WITH AN ELECTRIC CLOCK	2.9	7
VOLTAGE REGULATOR STABILITY ADJUST R8	2.10	7
FIGURE 2-3 VOLTAGE REGULATOR		7

SECTION 3 SERVICE & MAINTENANCE

PREVENTIVE MAINTENANCE	3.1	8
CLEANING	3.2	8
GEARBOX LUBRICATION	3.3	8
TABLE C QUARTERLY OR 250 HOUR PREVENTIVE MAINTENANCE SCHEDULE		8
FIGURE 3-1 POWER-TAKE-OFF SHAFT MAJOR PARTS		8
POWER-TAKE-OFF SHAFT LUBRICATION	3.4	9
TESTING ROTATING RECTIFIERS	3.5	9
FIGURE 3-2 TESTING RECTIFIERS WITH TEST LAMP		9
FIGURE 3-3 RECTIFIER SHORTED DUE TO SOLDER DROPPED BETWEEN TERMINAL & CASE		9
TABLE D TROUBLESHOOTING CHART		10

ECTION I INSTALLATION

.1 INSPECTING GENERATOR BEFORE ACCEPTING HIPMENT

Carefully unpack the generator. Examine the generator heet metal cover and the terminal box for damage. Re- ove the terminal box cover and inspect for loose mount- ng bolts or screws and loose terminal connections. ighten any loose mounting bolts and terminal connections.

Remove the sheet metal cover which surrounds the enerator. Inspect the inside of the generator for signs f damage to windings, lead wires and other internal arts. Inspect to make certain that any foreign material uch as crating nails, loose bolts or packing material hich may have fallen into the machine during unpacking re removed.

When inspection determines that the generator was eceived in satisfactory condition, re-install the gener- tor cover and the generator terminal box cover.

.2 MOUNTING GENERATOR

Mount the generator on a foundation, platform or railer. The generator must be solidly bolted to the oundation or trailer. Install or remove shims as neces- ary until the generator sets evenly on the foundation r trailer bed at all four generator mounting points.

.3 GEARBOX LUBRICATION

Before operating the generator check the gearbox oil evel (NOTE: GEARBOX IS USUALLY SHIPPED DRY). Fill with 1½ pints (1½ pounds) EP 140 Gear Oil. Main- ain oil level slightly below filler plug. DO NOT OVER- FILL. Overfilling will cause heating and possibly seal failure.

1.4 GENERATOR BEARING LUBRICATION

The generator has shielded, factory lubricated, sealed cartridge type ball bearings. They require no further lubrication.

1.5 ELECTRICAL CONNECTIONS

Wiring diagrams, figures 1-1 and 1-2, show the elec- trical connections of Katolight TD-1 series generators. The load may be taken from any combination of the fol- lowing:

a. 115-120 volt duplex receptacle
b. 230 volt receptacle
c. 230 volt cord set
d. Separate lines run in as shown by dash (- - -) lines on drawings.

CAUTION

IF THE GENERATOR IS TO BE USED AS A STAND-BY POWER PLANT WIRED INTO EXISTING COMMERCIAL WIRING, A TRANSFER SWITCH MUST BE USED WHICH ISOLATES THE GENERATOR FROM THE COMMERCIAL POWER WHENEVER THE GENERATOR IS NOT OPERATED AND WHICH ISOLATES THE COMMERCIAL POWER LINES FROM THE GENERATOR WHEN THE GENERATOR IS USED.

1.6 DETERMINING THE LOAD

The maximum load which should ever be applied to the generator is the KW or wattage rating for the generator. This rating is stamped on the generator identification (data) plate. To aid in determining the load applied to the generator tables A and B list the average wattage of various appliances and motors. These tables should be used only as a guide, the actual load should be determined by adding the wattage of the appliances and motors from the identification data stamped on the appliances and motors.

1.7 OBTAINING LOAD FROM 115 AND 230 VOLT RECEPTACLES OR 230 VOLT CORD SET

When a 230 volt load is connected to either the 230 Volt receptacle or cord set the current of the load should not exceed 50 Amperes. Determine load current by adding the wattage rating of the 230 Volt appliances and the current rating of all motors which are to be connected to the load. To find the current of 230 Volt appliances from their wattage rating use the following formula:

$$\frac{\text{Wattage Rating}}{\text{230 Volts}} = \text{Current in Amperes}$$

Add the current rating of the motors and appliances. The total current rating should not exceed 50 Amperes; the rating of the receptacles and cord set.

Connection of a 115 Volt load to the 115 Volt duplex receptacle should be limited to 20 Amperes maximum. 115 Volt load current rating of 115 Volt appliances and motors should be determined as described above. The formula will change as follows:

$$\frac{\text{Wattage Rating}}{\text{115 Volts}} = \text{Current in Amperes}$$

When a load is applied at the same time to both the 115 Volt receptacle and the 230 Volt receptacle or cord set the following precautions should be observed:

a. Load current connected to 115 Volt receptacle should not exceed 20 Amperes. Load current connected to the 230 Volt receptacle or cord set should not exceed 50 Amperes.

b. Total current rating of the 230 Volt load added to the total current rating of the 115 Volt load should not exceed the Amperage rating of the generator indicated on the generator data plate.

1.8 STORING GENERATOR BETWEEN USE

Keep the generator in a building where it is protected from snow and rain and free of excessive dust.

TABLE A
TYPICAL APPLIANCE LOADS

Load	Watt	Volt	Wire	Brkr.
Range	12,000	120/240	3 No. 8	40.2
Range, 2 oven	21,000	120/240	3 No. 4	70.2
Oven	5,000	120/240	3 No.10	30.2
Range Top	6,800	120/240	3 No. 8	40.2
Dishwasher	1,200	120	2 No.12	20.1
Disposal	300	120	2 No.12	20.1
Broiler	1,500	120	2 No.12	20.1
Fryer	1,300	120	2 No.12	20.1
Coffeemaker	1,100	120	2 No.12	20.1
Exhaust Fan	300	120	2 No.12	20.1
[illegible]zer	350	120	2 No.12	20.1
[illegible]rigerator	300	120	2 No.12.	20.1
T[illegible]	1,100	120	2 No.12	20.1
Wa[illegible]	1,200	120	2 No.12	20.1
Dryer	5,000	120/240	3 No.10	30.2
Dryer (H.S)	9,000	120/240	3 No. 6	50.2
Hand Iron	1,000	120	2 No.12	20.1
Ironer	1,650	120	2 No.12	20.1
Water Heater	3,000	120/240	2 No.12	30.2

TABLE B
SINGLE PHASE MOTOR LOADS

RUNNING LOAD					STARTING INRUSH KVA
HP	KW	KVA	AMPERES 115 V.	AMPERES 230 V.	
¼	.29	.53	4.6	2.3	3.45
⅓	.45	.75	6.5	3.25	4.15
½	.60	.92	8.0	4.0	5.75
¾	.86	1.32	11.5	5.75	7.6
1	1.05	2.1	18.0	9.0	11.5
1.5	1.57	2.1	18.0	9.0	11.5
2	2.05	2.55	22.2	11.1	15.0
3	3.1	3.7	32.0	16.0	20.7
5	4.6	5.1	43.0	21.5	31.0
7.5	7.0	7.8	68.0	34.0	[illegible]

DATA FOR SINGLE-PHASE MOTORS TO NEMA STANDARDS

NOTE

Motor loads as seen by the generator include corrective factors for motor efficiency and power factor.

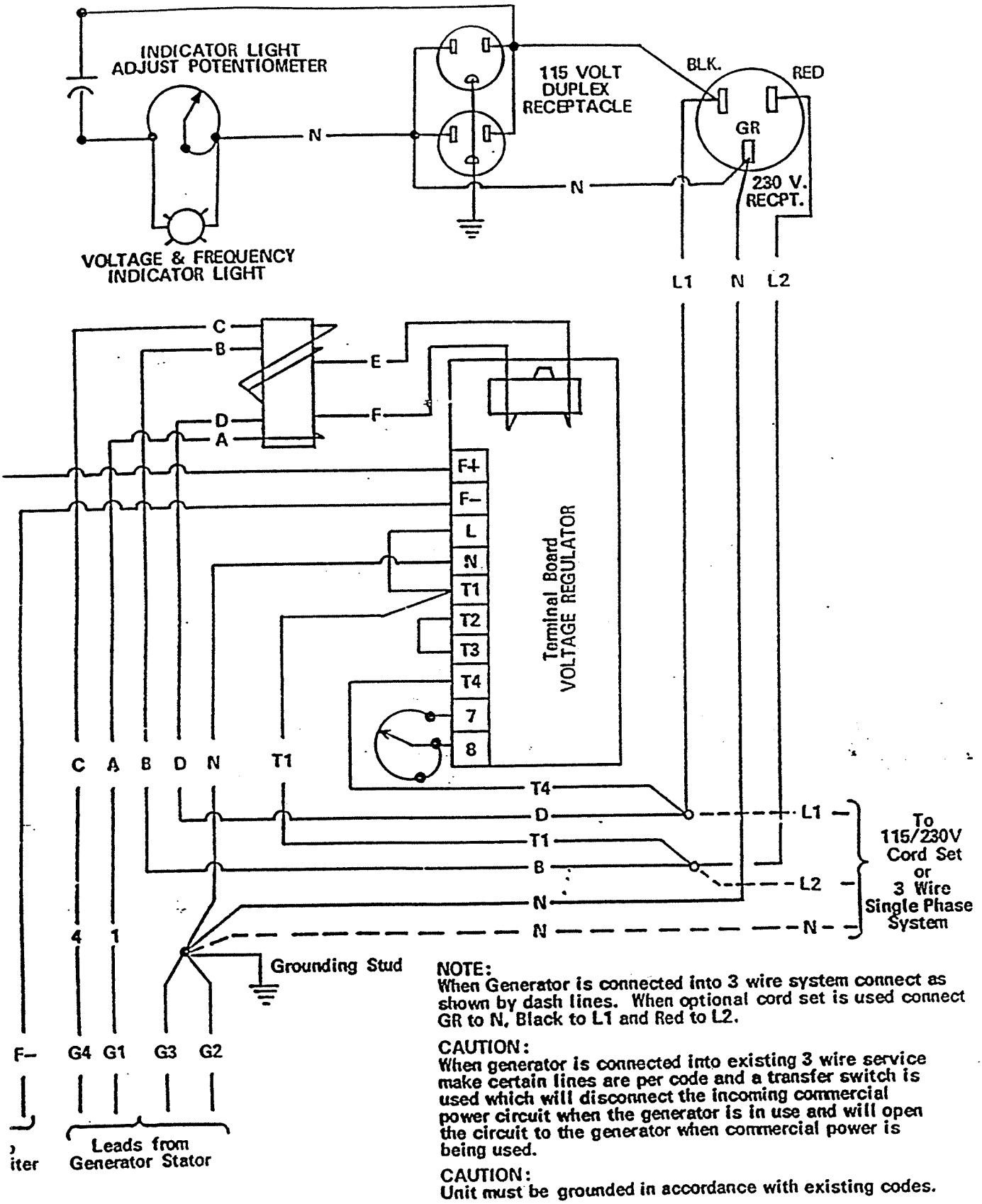

NOTE:
When Generator is connected into 3 wire system connect as shown by dash lines. When optional cord set is used connect GR to N, Black to L1 and Red to L2.

CAUTION:
When generator is connected into existing 3 wire service make certain lines are per code and a transfer switch is used which will disconnect the incoming commercial power circuit when the generator is in use and will open the circuit to the generator when commercial power is being used.

CAUTION:
Unit must be grounded in accordance with existing codes.

Figure 1-1. Electrical Connection Diagram, Single Phase, 4 Wire 120/240 Volt TD-1 Series AC Generator.

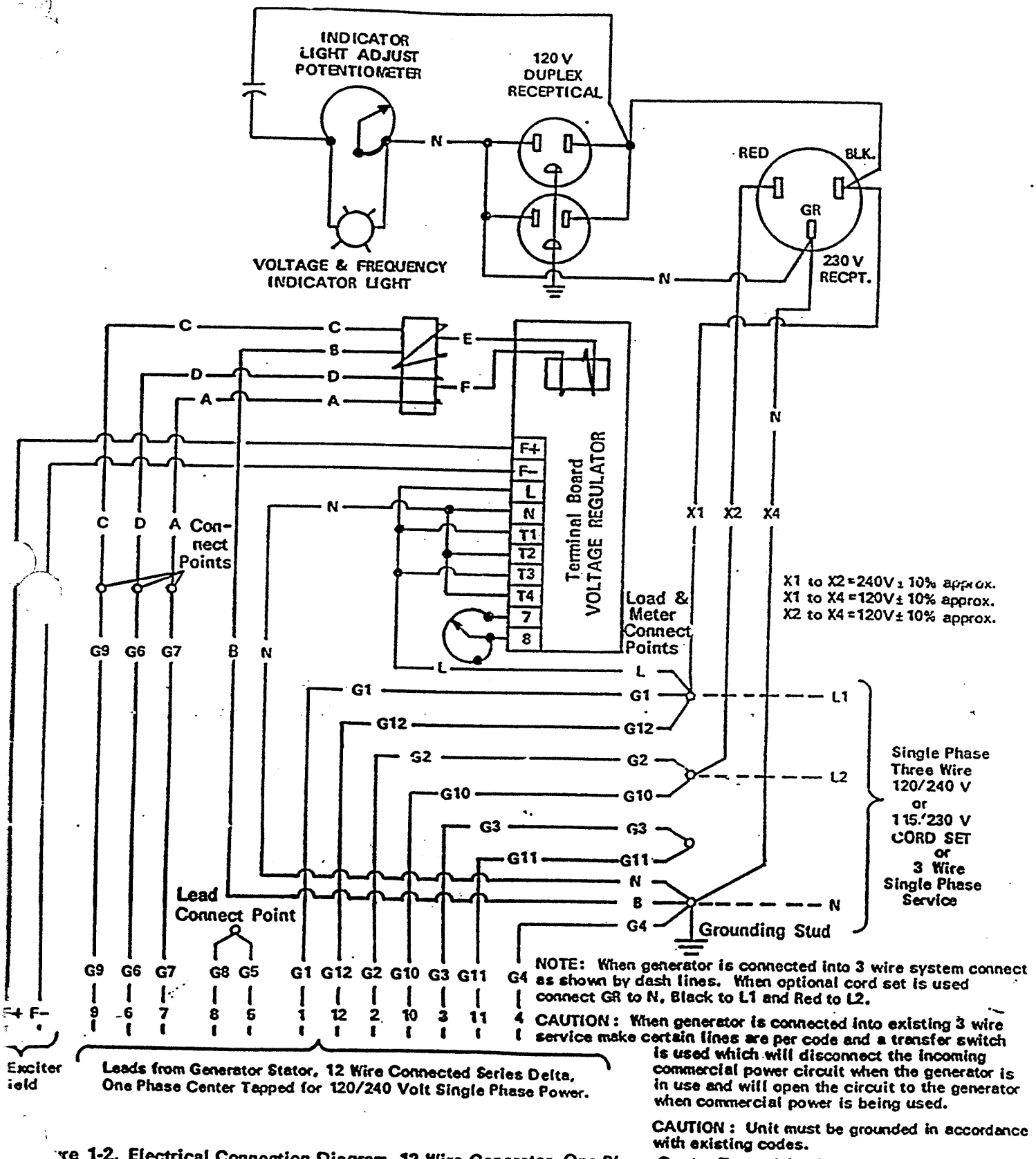

re 1-2, Electrical Connection Diagram, 12 Wire Generator, One Phase Center Tapped for Single Phase Power

ECTION 2 OPERATION

.1 CONNECTING GENERATOR TO LOAD

Make certain load connected to the 115 volt duplex receptacle, 230 volt receptacle or 230 volt cord set does ot exceed the rating of the receptacles or cord set. efer to paragraphs 1.5, 1.6 and 1.7

2 ALIGNING GENERATOR WITH TRACTOR OWER TAKE-OFF

The double universal joint construction of the power ke-off drive shaft allows for considerable angular saligment between the gearbox and the tractor power ke-off shaft. As shown in figure 2-1, the angular isalignment of the universal joints if at all possible ould not be more than 15 degrees. If the power take- f drive shaft is taken apart make certain the drive aft universal joint knuckles are in time with one an- ner as shown in figure 2-2 when the power take-off aft is put back together. If the drive shaft universal int knuckles are not in time chattering will occur ich will cause a flicker in the electrical output. The me flicker will also occur if the angle of the drive aft from the generator to the tractor power take-off more than 15 degrees. Make certain the power take- shaft lock pin is properly engaged and the removable wer take-off shaft shields are installed before operat- g the unit.

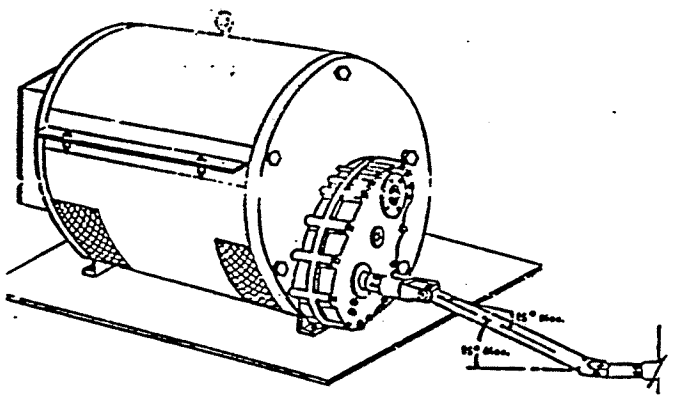

gure 2-1 Tractor Drive Generator Connected To actor Power Take-off.

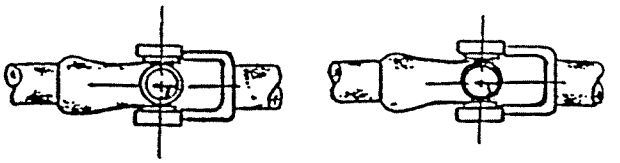

RIGHT Universal Joint Knuckles in same plane (Parallel)

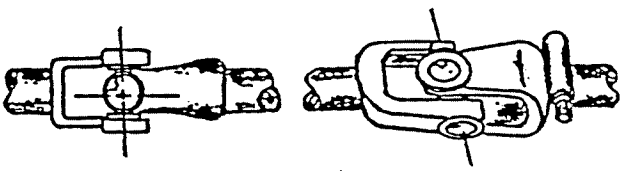

WRONG Universal Joint Knuckles NOT in same plane (NOT Parallel)

Figure 2.2 Aligning Power Take-off Shaft Universal Joints Following Disassembly and Reassembly of the Power Take-off Shaft.

2.3 CHECKS TO BE MADE BEFORE STARTING GENERATOR

Before starting generator, make certain the following are satisfactory.

a. Make certain load connected to receptacles or cord set does not exceed their ratings. Make certain load is balanced. Refer to paragraphs 1.5, 1.6, 1.7 and 2.1.

b. Make certain power take-off is aligned satisfactorily and Gearbox is filled with grease. Refer to paragraphs 1.3 and 2.2.

c. When the generator is started in extremely cold weather, start the tractor and with the tractor idling, engage the power-take-off and let the clutch out slowly. Make certain the gearbox and generator rotor turns freely.

2.4 INITIAL START - GENERATOR USED FOR FIRST TIME

When the generator is used for the first time the following procedure should be followed:

a. Start the generator, bring up to rated speed of 1800 RPM (Generator shaft speed not engine speed). Refer to paragraphs 2.8 and 2.9.

b. Before applying load make certain output voltage is as required for load. Generator output voltage must be the same as the voltage rating of motors operating from generator. Procedures for adjusting voltage are listed in paragraph 2.6.

Katolight Service - Master Repair Manual - Page 340

c. Adjust combination Voltage and Frequency indicator light potentiometer as described in paragraph 2.7.

NOTE

e set as described in paragraph 2.7, the indicator ight will give a reasonably accurate indication that frequency is satisfactory. However, as a check we recommend either checking speed with a hand tachometer held on the generator shaft which extends through gearbox or check frequency with electric clock as described in paragraph 2.9.

d. When frequency and voltage have been adjusted the load can be applied. It may be necessary to readjust speed and voltage slighdy as engine speed may dip when load is applied.

5 NORMAL OPERATION

Before starting generator check unit as described in ragraph 2.3 steps a. through d.

Then start unit, bring up to rated speed and apply ad as follows.

a. Bring up to 1800 RPM generator shaft speed.

NOTE

set as described in paragraph 2.7, the indicator gh uld give a reasonably accurate indication that eed is correct. However, we recommend that as an ditional check either the speed should be checked th a hand tachometer held on the generator shaft which ends through the gearbox or that frequency is checked th an electric clock. See paragraphs 2.8 and 2.9.

b. Once set as described in paragraph 2.6, the voltage generally should not require further adjustment. If possible, it should be checked with an accurate voltmeter.

c. When it has been determined frequency is 60 CPS (1800 RPM) and that voltage is satisfactory load may be applied.

NOTE

ke certain load applied to receptacles and cord set es not exceed their ratings. Refer to paragraphs and 1.7.

NOTE

gine speed may dip slightly when load is applied and be necessary to increase engine throttle setting to return generator speed to 1800 RPM.

2.6 VOLTAGE ADJUSTMENT

When the generator is placed in operation for the first time. The voltage RANGE ADJUST rheostat and VOLTAGE ADJUST rheostat must be adjusted as described in the following steps (a) through (e). Once the RANGE ADJUST is set slight changes in voltage can be made by turning the VOLTAGE ADJUST rheostat.

a. Remove cover from terminal box. Refer to figure 2-3, page 7 for location of RANGE ADJUST and VOLTAGE ADJUST rheostats.

b. Set VOLTAGE ADJUST rheostat to midpoint position (half way between its full counterclockwise position). Turn RANGE ADJUST rheostat full-counter-clockwise (full resistance).

c. Start generator and bring up to 1800 RPM. Check speed with hand tachometer held on generator shaft which extends through gearbox.

d. Check voltage with an accurate voltmeter. Turn RANGE ADJUST rheostat to point where desired voltage is indicated on voltmeter.

e. The RANGE ADJUST rheostat should not require any further adjustment. Slight adjustments in voltage may be made by turning the VOLTAGE ADJUST rheostat.

2.7 COMBINATION VOLTAGE AND FREQUENCY INDICATOR LIGHT

When the generator is operated for the first time or should the voltage setting of the generator be changed, the potentiometer which controls the pick-up point of the indicator light must be adjusted.

Adjust indicator light potentiometer as follows:

a. Remove the terminal box cover. The indicator light potentiometer is mounted in the upper left hand corner of the terminal box. The potentiometer shaft is pointed to the back side of the terminal box so it will be necessary to turn its shaft by hand. DO NOT TOUCH WIRING.

b. Start generator and bring up to 1800 RPM, 60 CPS. Check speed with hand tachometer held on the generator shaft where it extends through the gearbox or check frequency with an electric clock as described in paragraph 2.8.

c. Make certain voltage has been correctly adjusted. Voltage should have been adjusted as described in paragraph 2.6 before the indicator light potentiometer is adjusted.

Katolight Service - Master Repair Manual - Page 341

d. When voltage is correct and you are sure generator is at 1800 RPM, 60 CPS, Turn the indicator light potentiometer until indicator light just comes on. If light was on, turn the potentiometer until the light goes off and then turn it back to point where light just comes on.

} CHECKING GENERATOR SPEED (FREQUENCY) TH HAND TACHOMETER

The generator output frequency will be 60 CPS when e generator shaft is turning at 1800 RPM.

An accurate hand tachometer held on the generator aft where it extends through the gearbox is a recommended method of checking to make certain the generator aft is turning at 1800 RPM.

NOTE

he generator has a frequency light which once set as escribed in paragraph 2.7 will give a reasonably accurate idication that the generator is operating at 1800 RPM. S AN ADDITIONAL CHECK RATHER THAN RELYG ON THE INDICATOR LIGHT WE RECOMMEND ITHER CHECKING SPEED WITH HAND TACHOMTER AS DESCRIBED ABOVE OR CHECKING FREUENCY WITH AN ELECTRIC CLOCK AS DESCRIBD IN PARAGRAPH 2.9.

.9 CHECKING GENERATOR FREQUENCY WITH .N ELECTRIC CLOCK

An electric clock plugged into the 115 volt duplex eceptacle provides a satisfactory means of checking requency. Check as follows.

a. Start generator and bring up to what you believe to be as close as possible to 1800 RPM (60 CPS). If the indicator light potentiometer has been adjusted, the indicator light can be used.

b. Plug an electric clock into the 115 volt duplex receptacle. Check the sweep of the second hand on the electric clock against the sweep of the second hand on a watch.

c. If the generator is at 1800 RPM (60 CPS) the second hand on the electric clock will move at the same speed as the second hand on the watch (through 60 seconds in 1 minute). If the generator is operating under speed the electric clock will slow down. If the generator is overspeed the electric clock second hand will move faster than normal.

d. Set engine throttle to point where second hand on the electric clock moves at the same speed as the second hand on watch.

2.10 VOLTAGE REGULATOR STABILITY ADJUST R8

STABILITY ADJUST resistor R8 is located on the printed circuit board. Only adjust STABILITY ADJUST R8 if during operation instability or slow response occurs. Turning STABILITY ADJUST clockwise increases negative feedback therefore, increasing stability and increasing response time. The STABILITY ADJUST should be set so that the output voltage of the generator is stable at both no-load and full-load allowing for the fastest regulator response.

NOTE

Make certain unit is at rated speed when making voltage and stability adjustments (60 CPS, 1800 RPM).

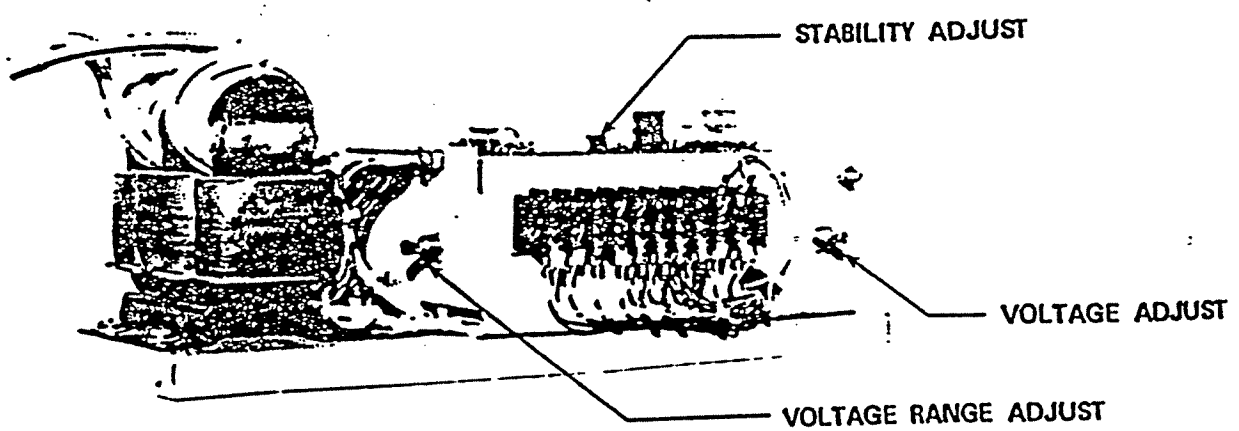

Figure 2-3 Voltage Regulator

Katolight Service - Master Repair Manual - Page 342

SECTION 3 SERVICE & MAINTENANCE

3.1 PREVENTIVE MAINTENANCE

Preventive maintenance is the practice of periodically inspecting the generator set, cleaning the generator set and eliminating any minor disorders before they become serious. A routine regular preventive maintenance program practiced conscientiously will insure peak performance, lengthen the life of the generator and greatly reduce the need for repairs. The 250 hour or Quarterly preventive maintenance schedule described in TABLE C is enclosed as a guide for establishing a preventive maintenance program for generators operating approximately 8 hours per day under normal conditions.

If the generator is not operated as many hours per Quarter the time between preventive maintenance inspection and service can normally be extended. If the generator is operated under severe conditions such as extreme dust, or blowing snow or rain the time between preventive maintenance inspections should be shortened.

3.2 CLEANING

When inspection determines cleaning is necessary clean the generator and controls as follows:

a. Remove dust from ventilating screens with a vacuum cleaner or use dry low pressure compressed air at 25 to 50 pounds.

b. Remove cover surrounding generator and blow dust from the inside of the generator with 25 to 50 psi compressed air or use a vacuum cleaner.

c. Remove terminal box cover. Blow dirt from controls with low pressure compressed air.

3.3 GEARBOX LUBRICATION

Lubricate gearbox with approximately 1½ pints (1½ lbs.) EP 140 Gear Oil. Maintain to slightly below filler plug. **DO NOT OVERFILL. OVERFILLING WILL CAUSE UNIT TO HEAT WHICH WILL CAUSE SEAL FAILURE.**

TABLE C

QUARTERLY OR 250 HOUR PREVENTIVE MAINTENANCE SCHEDULE

(4 TIMES PER YEAR)

1. Remove cover from generator. Inspect inside of generator for frayed lead wires, damaged windings and excessive dust. NOTE: Keep generator ventilating ports clean at all times. Check ventilating screens daily.

2. Remove terminal box cover. Inspect for frayed lead wires, loose terminal connections and excessive accumulation of dust.

3. Repair any frayed wiring. Tighten loose terminals. Clean generator and controls.

4. Check gearbox oil level.

5. Check power take-off drive shaft for dry universal joints. Grease if dry.

6. With unit running check for any unusual noise or vibration. Refer to trouble-shooting chart if there is any vibration or unusual noise.

7. With unit running check to make certain generator is operating at 1800 RPM, 60 CPS. Refer to Section 2 of this manual for procedures for checking speed.

8. With unit running check to make certain voltage is adjusted properly. Refer to the voltage adjustment procedure listed in Section 2 of this manual.

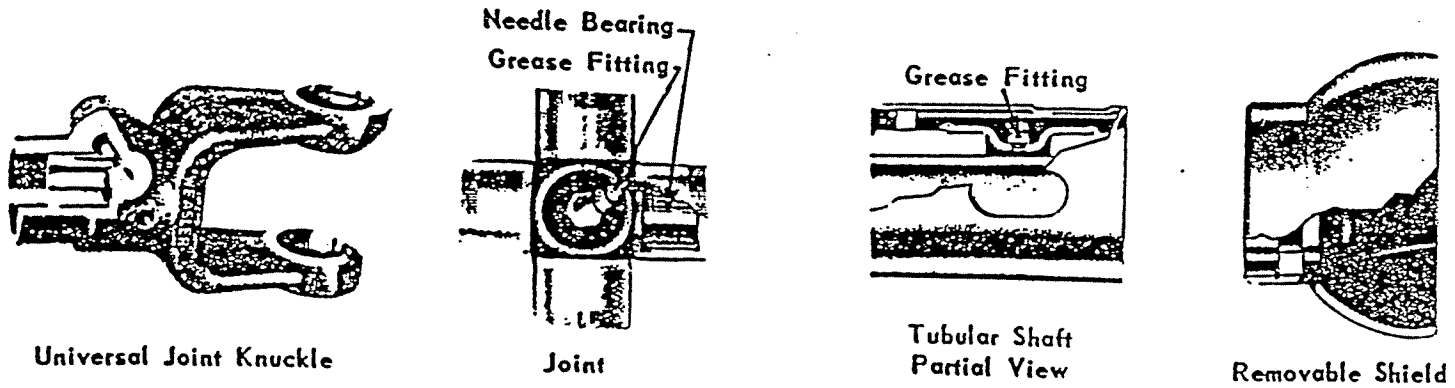

Figure 3-1 Power Take-off Shaft Major Parts.

Katolight Service - Master Repair Manual - Page 343

(POWER TAKE-OFF SHAFT LUBRICATION

As shown in figure 3-1, grease fittings are installed the universal joints and in the tubular shaft. Do not ergrease the universal joint needle bearings, but not allow the universal joints to become dry.

Periodic lubrication of the shaft splines will allow the aft to expand and compress easily as well as reduce ear.

.5 TESTING ROTATING RECTIFIERS

The rotating rectifiers are threaded into the generator haft. They can be tested with a continuity light constructed of two standard 1.5 volt flashlight batteries, a ulb and lead wires as shown in figure 3-2.

Test rotating rectifiers as follows:

a. With generator not running, remove the cover which surrounds the generator.

b. Unsolder the wire from the rotating rectifier.

NOTE

When removing lead wire or soldering lead wire back onto the rectifier make certain solder does not drop across rectifier terminal to the case as shown in figure 3.3. This would cause rectifier to become shorted. Use resin core solder - not acid core solder.

c. Remove the rectifier from the generator shaft.

d. Place tester leads across rectifier as shown by solid lines in figure 3-2. See if tester bulb lights.

e. Place tester leads across rectifier in the opposite direction as shown by dash lines on figure 3-2. See if tester bulb lights.

f. If the tester bulb lights in both steps d. and e. the rectifier is probably shorted and should be replaced.

g. If the tester bulb does not light in either steps d. or e. it is probably open circuited and should be replaced.

h. Replace any defective rectifiers. Solder lead wires back onto terminal of rectifier and then secure rectifier wires to shaft with tie-down lacing.

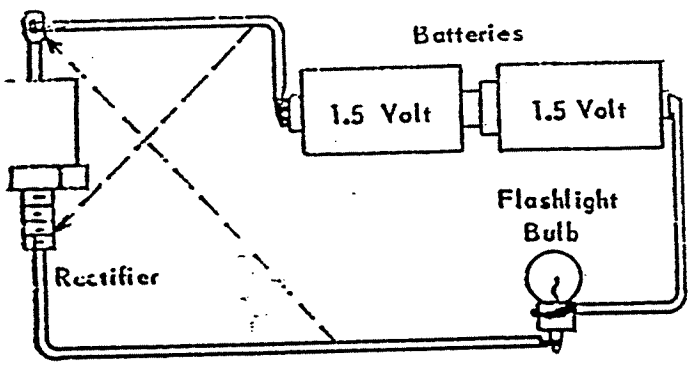

Figure 3-2 Testing Rectifiers with Test Lamp

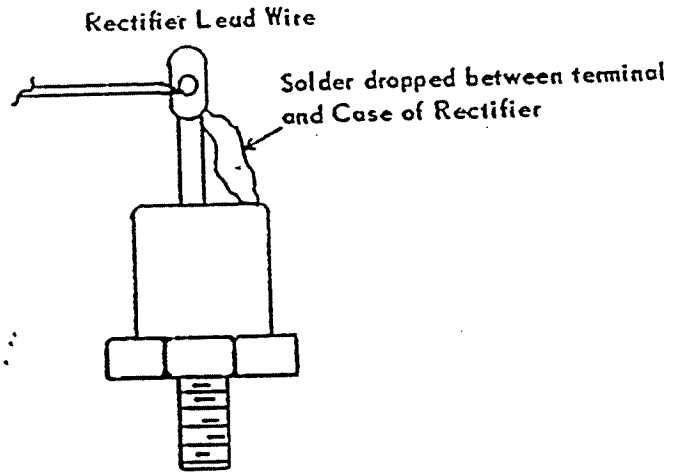

Figure 3-3 Rectifier Shorted Due to Solder Dropped Between Terminal and Case

TABLE D
TROUBLESHOOTING CHART

SYMPTOM	POSSIBLE CAUSE	REMEDY
No Output Voltage	Engine speed too low.	Increase speed until generator produces 60 cycle. See Section 2.
	Short circuit in load.	Disconnect load. Check motors, appliances and load leads for cause of short circuit.
	Defective receptacles	Remove terminal box cover & test with test light. Make certain 230 Volt receptacle is tested between the RED & GR and the BLACK & GR points. Replace defective receptacle.
	Loose terminal connections or shorted lead wires in control box.	Remove terminal box cover. Check terminal connections. Check for bare wires.
	Open fuses or transfer switch. When generator is connected directly to 3 wire, 115/230 volt system.	Replace fuses. Set transfer switch to correct position.
	Voltage regulator defective	Contact KATOLIGHT CORPORATION Sales and Service Office – Mankato, Minnesota.
	Open or short circuited leads.	Remove generator cover and check exciter field leads and leads from exciter armature to rotating rectifiers and generator field coils. Make certain the tie-down lacing holding exciter leads to shaft is securely wrapped and tied before placing unit back in operation.
	Open or short circuited voltage adjust rheostat or range adjust rheostat.	Check rheostats. Replace if defective.
	Open or short circuited exciter field coils, exciter armature windings, generator field coils or generator stator windings.	Consult KATOLIGHT CORPORATION Sales and Service Office – Mankato, Minnesota.
Low Voltage	Engine speed too low.	Increase engine speed until generator produces 60 cycle output. Refer to Section 2.
	Voltage adjust potentiometer not properly adjusted.	Adjust as described in Section 2.
	Generator Overloaded.	Reduce load to rated value. Make certain generator is not overloaded by unbalanced load. Refer to sections 1&2.
	Short circuit in load.	Remove load. Check appliances and motors for point of short circuit.
	Defective voltage regulator or rotating rectifiers.	Consult KATOLIGHT CORPORATION Sales and Service Office-Mankato, Minnesota if voltage regulator is defective. Test rotating rectifiers.

TROUBLESHOOTING CHART

(Continued)

SYMPTOM	POSSIBLE CAUSE	REMEDY
High Voltage	Engine speed too high	Decrease engine speed until generator produces a 60 cycle output. Refer to Section 2.
	Voltage adjust rheostat or range adjust rheostat not set correctly.	Set rheostats Refer to Section 2.
	Defective voltage regulator.	Contact KATOLIGHT CORPORATION Sales and Service Office – Mankato, Minnesota.
Poor Voltage Regulation	Load in excess of generator rating.	Reduce load. Refer to Sections 1 and 2.
Continuous Voltage Fluctuation	Engine speed not constant.	Engine may not have enough power or engine governor may be worn or improperly adjusted. Set or repair defective governor.
Vibration and Noise	Defective bearings.	Replace bearing. Consult KATOLIGHT CORPORATION before attempting to replace bearing.
	Gearbox dry or overfilled.	Check gearbox oil level.
	Power take-off mis-alignment excessive or universal joints dry or worn.	Correct defects. Refer to Section 2 for alignment procedures.

WARRANTY

This generator is warranted to produce its rated output as stamped on the nameplate when installed and operated in accordance with instructions.

It is warranted to be in good condition electrically and mechanically when leaving the factory.

It is warranted against electrical or mechanical defects in workmanship for a period of one year after shipment from the factory. Any parts found to be defective by factory inspectors after return to the factory, transportation charges prepaid, will be replaced or repaired free of charge. This does not include any component part or standard accessory such as meters, engines, relays, etc., made by other manufacturers, as these are subject to the warranties of those manufacturers.

SERVICE MANUAL FOR KATOLIGHT ELECTRIC GENERATORS



01/01/01

KATOLIGHT SERVICE MANUAL

WARNING: 1. This manual is only intended for Katolight Master Reps or Distributors.
2. Only Qualified Installers.
3. Before reading this manual please read all manuals accompanying unit.

TABLE OF CONTENTS

INTRODUCTION ---------- PAGE 1

GENERATOR TERMINOLOGY ---------- PAGE 2

INSTALLATION INSTRUCTIONS ---------- PAGE 3

SYSTEM WIRING INSTRUCTIONS ---------- PAGE 4-5

RECOMMENDED INSTALLATION METHOD ---------- PAGE 6

WIRING SCHEMATIC 9kW ---------- PAGE 7

WIRING SCHEMATIC 15kW ---------- PAGE 8

SYSTEM START UP CHECK ---------- PAGE 9-10

TROUBLESHOOTING ATS ---------- PAGE 10-12

INDIVIDUAL CIRCUITS 9kW (ISOLATED) ---------- PAGE 12-15

INDIVIDUAL CIRCUITS 15kW (ISOLATED) ---------- PAGE 16-21

TROUBLESHOOTING GENERATOR 9kW ---------- PAGE 22

DISASSEMBLY INSTRUCTIONS 9kW ---------- PAGE 22

ASSEMBLY INSTRUCTIONS 9kW ---------- PAGE 23

PARTS BREAKDOWN 9kW ---------- PAGE 24-25

PARTS LIST 9kW ---------- PAGE 26

TROUBLESHOOTING GENERATOR 15kW ---------- PAGE 27-28

DISASSEMBLY & ASSEMBLY INSTRUCTIONS 15kW ---------- PAGE 28

PARTS BREAKDOWN 15kW ---------- PAGE 29-30

PARTS LIST 15kW ---------- PAGE 31

INTRODUCTION

General Information

Read this manual carefully before operating or servicing generators to familiarize yourself with proper safety, operation and maintenance procedures. FAILURE TO COMPLY WITH INSTRUCTIONS IN THIS MANUAL COULD RESULT IN PERSONAL INJURY, PROPERTY DAMAGE AND/OR VOIDING OF THE WARRANTY. KATOLIGHT WILL NOT BE LIABLE FOR ANY DAMAGE BECAUSE OF FAILURE TO FOLLOW THESE INSTRUCTIONS.

Check the unit over for any signs of freight damage. Check item list; Transfer Switch, Literature, Battery hold down kit, Diode, and Insulated Connectors for AC and DC wires should all be included with unit.

This manual is not all inclusive. Each operating unit has a manual specific to its use.

Basic Generator Operations (Simplified)

Electric power is produced in the generators by a magnetic field rotating inside a stator. This is a brush less type generator. To start producing electricity, it is the residual magnetism in the rotor's metal core which induces a small amount of current in the stator. This current is fedback into the rotor (increasing the magnetic field and the amount of current induced) until the rotor's magnetic field reaches saturation. At this point there is sufficient energy present in the stators output windings to operate the unit at its rated capacity.

Usage

The generator is connected with the home electrical distribution panel(s), via the transfer switch. It is intended that this unit be used in the following manner.

When the normal electrical service is interrupted the automatic transfer switch (ATS) will signal the generator control circuit to start the engine. When the generator output voltage reaches a predetermined level, the ATS will automatically switch the load distribution panel to the generator output power. After utility service has been restored, the ATS switches the load back to the utility power and the generator shuts down after a short cool down period.

Once every 14 days the generator will "exercise itself". This means it will start and run for 20 minutes insuring that the unit is in a good operating condition when needed.

.

GENERATOR TERMINOLOGY

ALTERNATING CURRENT	Alternating current or AC is the flow of electrons in a conductor, first in one direction then in the other.
AMPERES (AMPS)	The rate of electron flow through a conductor is measured in amperes, which is a measurement of electrons flowing past a given point at a given time.
DIRECT CURRENT	Direct current or DC is the flow of electrons in only one direction through the conductor.
HERTZ	A unit of frequency equal to one cycle per second.
OHM	One Ohm is the amount of resistance that will permit one ampere of current to flow in a conductor when one volt of electro-motive force is applied.
ROTOR	The rotor is essentially an electro-magnet, since the flow of direct current through its windings creates a magnetic field around those windings. The strength of the magnetic field can be increased by (a) forming the wires into a coil, (b) increasing the wire size, or (c) increasing the current flow through the wires
SINE WAVE	A wave diagram (sine wave) of alternating current shows that current goes from a zero value to a maximum positive value, reversing itself again and returns to zero. Then it goes to a maximum negative value, reversing itself and returns to zero.
STATOR	The number of turns of wire in a stator winding are determined when it is manufactured. A typical stator assembly may be a single-phase type, or a 3 phase type. The greater the number of turns of wire in a stator winding, the greater the induced EMF when magnetic lines of flux cut through the windings.
VOLTS	The volt is the amount of electro-motive force (EMF) that will result in a current (electron) flow of one ampere through a resistance of one Ohm.
WATTS	One watt is equal to one ampere of current flow under pressure of one volt. Calculate electrical power by using the formula: WATTS = VOLTS x AMPERES.

INSTALLATION

Site Selection and Preparation

Location:

The unit should be placed in an area that allows plenty of room around the generator for ventilation and maintenance. Approximately 3 feet on each side. Covering or restricting the air passages on the sides of the generator unit will cause the unit to overheat. Examples would be landscaping, piles of leaves, or piles of snow. Leaving a three foot open area around the unit will help in preventing any overheating. When placing the generator, the direction of the exhaust should be pointing away from windows, doors, and any ventilation systems. **Do not install indoors.**

Pad;

Holes provided in the frame are .375" diameter but we recommend a 1/4" lag bolt to allow for variance of placement in the cement. The unit should be bolted on a cement pad that is 4 to 6" thick. The cement pad for the 9kW should be 42.25" wide and 50.75" long. The cement pad for the 15kW should be 48" wide and 72" long. The unit is mounted on rubber isolaters to the frame to make the unit run as vibration free as possible.

Fuel;

For the best operation of the Lighthouse unit the fuels used should have a minimum content of 1000 BTU's per cubic foot for Natural Gas (NG) and 2520 BTU's per cubic foot for Liquid Propane (LP). Contact local supplier for local BTU content. Line pressure for the 9kW and 15kW should be a maximum of 8oz. and a minimum of 4oz. When connecting fuel supply, installation of a manual shutoff valve at the unit is recommended.

The Lighthouse 9kW at full load consumes 162 cubic feet per hour or 162,000 BTU's per hour of Natural Gas (NG) and 72 cubic feet per hour or 182,000 BTU's per hour of Liquid Propane (LP). Approximately 2 gallons of Liquid Propane per hour at full load. The Lighthouse 15kW at full load consumes 285 cubic feet per hour or 285,000 BTU's per hour of Natural Gas (NG) and 122 cubic feet per hour or 308,000 BTU's per hour of Liquid Propane (LP). Approximately 3.1 gallons of Liquid Propane per hour at full load.

⚠ WARNING



- **FIRE HAZARD**
  Overheating of unit may cause fire and serious personal injury.
- Covering or restricting the air passages on the sides of the Lighthouse units will cause the unit to overheat and may create a fire hazard. Examples would be landscaping, leaves or piles of snow.
- Leaving a three foot open area around the unit will help in preventing any overheating.

⚠ WARNING



- **EXPLOSION HAZARD**
  Natural gas and Liquid Propane are highly explosive.
- Natural gas is lighter than air and will collect in high places. Liquid Propane vapor is heavier than air and will collect in lower places.
- Extreme caution should be taken when working on a new installation or while performing general maintenance.
- Do not smoke or use open flame during maintenance.

Lighthouse units are tested with Natural Gas before they leave the factory. If Natural Gas is to be used no carburetor adjustments are required. If Liquid Propane Gas is going to be used the carburetor solenoid will need to be connected, for the 9kW unit. Follow these steps to install the LP fuel orifice for LP Gas operation of the 15kW unit.

1. The main fuel line clamp will have to be loosened and the line removed from the carburetor.
2. Install the LP fuel orifice with a straight blade screwdriver. The fuel inlet to the carburetor is internally threaded to receive the LP orifice.
3. After the LP orifice is installed reattach the fuel line and retighten the clamp. The 15kW is now equipped to run off LP Gas.

The carburetor jets are factory set for LP Gas and no adjustments beyond orifice installation are necessary for LP Gas operation. Use only the vapor withdrawal type system if Liquid Propane Gas (LP) is to be used.

WARNING: The installation of this type of equipment must be done by licensed electrician's or contractors and licensed gas technician or plumbers. Installation must be in conformance with NEC and local electrical and building codes. Utility disconnect must be in the off position before you start any wiring. To insure safe installation of unit make sure Mode switch, on control box, is in the off position.

System Wiring

The installation of the Automatic Transfer Switch must be done by a qualified electrician. Under no circumstance should an unqualified person attempt to install this equipment. The instructions on the installation of the Automatic Transfer Switch are with the transfer switch and must be followed for correct installation and operation. Locate the transfer switch as close as possible to the distribution panel(s). The amperage rating of the transfer switch must be at least as large as the amperage rating of the distribution panel(s). A series 165, 100 amp ATS must be used with a distribution panel(s) up to 100 amps.

The recommended method to connect the Lighthouse system to the home desired circuits is through a Emergency Distribution Panel(s). This panel(s) must be sized to the generator amperage capability. Always follow the local codes and regulations. All selected emergency circuits are removed from main distribution panel(s) and reinstalled in the Emergency Distribution Panel(s). Total running load must not exceed generator rating or there will be a risk of overloading and damaging the generator.

Refer to the wiring diagrams contained in this manual for proper connection of the AC circuit. The two AC power leads must be connected directly to the main circuit breaker in the generator control box. The neutral wire must be connected to the neutral provided. A green ground wire from the ATS must also be connected to the ground connection in the control box. Ensure that all local codes are followed when making these connections. A ground lug is provided on the rear of enclosure to which a bare ground wire must be connected to a ground rod driven into the earth. A 120 volt circuit will need to be installed, inside the 240 volt conduit, from the utility to the control box of generator for the battery charger plug.

9kW UNIT

Refer to the wiring diagrams contained in this manual for proper connection of the DC circuit. The insulated quick connect terminals provided must be used to make these connections. A four wire cable (SJO16/4) is needed between the control panel and the transfer switch run through a different conduit from the AC leads. Remove ATS cover and locate the green connection block. Terminal Block (TB) positions 3,4,5,7 and 8 will be used. Connections at the generator are within the control panel at terminal strip positions 2,3,4, and 6. The insulated spades included must be used. Connections are:

ATS 3 connects to Generator position 6.
ATS 4 connects to Generator position 3.
ATS 7 connects to Generator position 4.
ATS 8 connects to Generator position 2.
ATS 5 connects to ATS 7 with provided diode. Diode cathode connects to position 5.

It is important that each wire be connected to the proper terminal, otherwise the system will not operate correctly.
Note page 6 for wiring diagram and preferred method of connection and installation of the DC circuit, transfer switch.

15kW UNIT

Refer to the wiring diagrams contained in this manual for proper connection of the DC circuit. The insulated quick connect terminals provided must be used to make these connections. A four wire cable (SJO16/4) is needed between the control panel and the transfer switch run through a different conduit from the AC leads. Remove ATS cover and locate the green connection block. Terminal Block (TB) positions 3,4,5,7 and 8 will be used. Connections at the generator are within the control panel at terminal strip positions 1,2,3, and 4. The insulated spades included must be used.
Connections are:
ATS 3 connects to Generator position 4.
ATS 4 connects to Generator position 3.
ATS 7 connects to Generator position 2.
ATS 8 connects to Generator position 1.
ATS 5 connects to ATS 7 with provided diode. Diode cathode connects to position 5.

It is important that each wire be connected to the proper terminal otherwise the system will not operate correctly.
Note page 32 wiring diagram for installation of the DC circuit.

⚠ WARNING



- **ACID BURN**
  Battery electrolyte fluids comprised of sulfuric acid that can be very dangerous and cause severe burns.
- Do not allow this fluid to contact eyes, skin, clothing, etc. If contact or spillage does occur, flush the area with water immediately.

⚠ WARNING



- **EXPLOSION HAZARD**
  Batteries contain sulfuric acid (when filled) and may emit explosive gasses.
- Read and follow safety instructions accompanying the battery.
- Keep sparks, flames and cigarettes away.
- Hydrogen gas is generated during charging and discharging.
- Always shield eyes, protect skin and clothing when working near batteries.

Battery Installation

The battery will be supplied by the customer. The battery must have at least 235 cold cranking amps for a cold start for the 9kW, and the 15kW should have a minimum of 40 amp/hours. Recommended size for the battery is U1 lawn mower tractor battery. The dimensions must be 7.5”x 5” x 6.5”. To place the battery in the battery compartment, the screws on the top and side of the cover need to be removed. Place the cover and screws to the side. Once the battery has been placed and tied down, with the battery hold down bar, the leads can be connected to the respective battery post. Connect battery charger leads at the same time battery is connected. Always connect the positive cable first and the negative cable last, when disconnecting it is negative cable first and then positive cable last.

Caution: Failure to connect and disconnect in the proper sequence can cause equipment damage. Ensure there is a clean tight fit from the cables to the posts. Replace the cover and screws.

Note: At this time the main power can be turned back on. The ASCO Transfer Switch will light up with the exercise light flashing. Refer to the ATS manual for operation and settings of switch.

Recommended Installation Method

Note: The system wiring on recommended and alternative install is for the 9kW unit only.

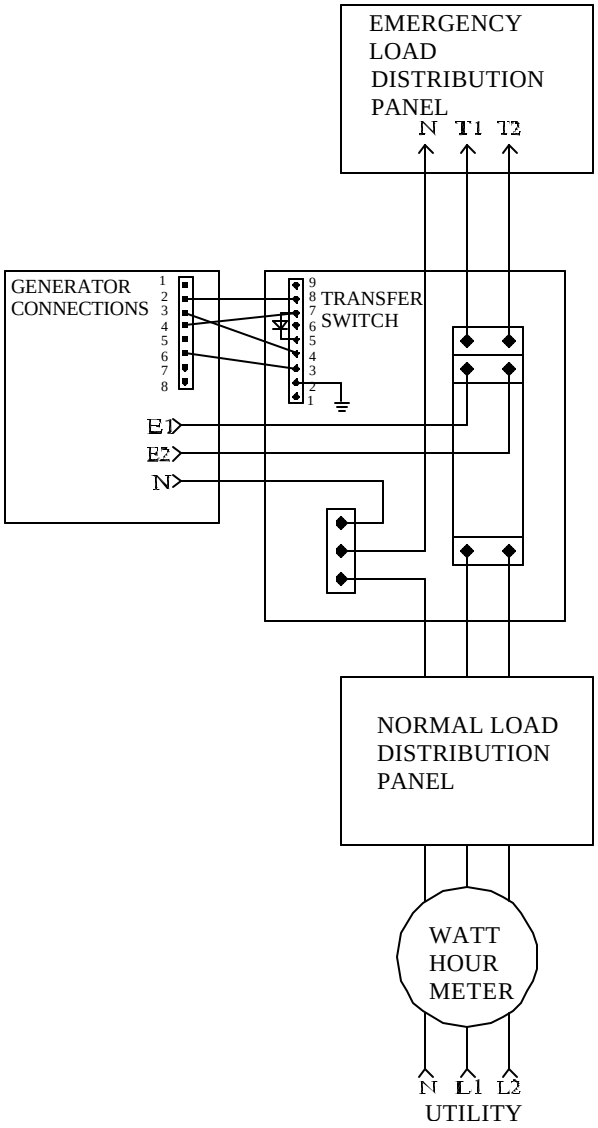

Alternative Installation Method

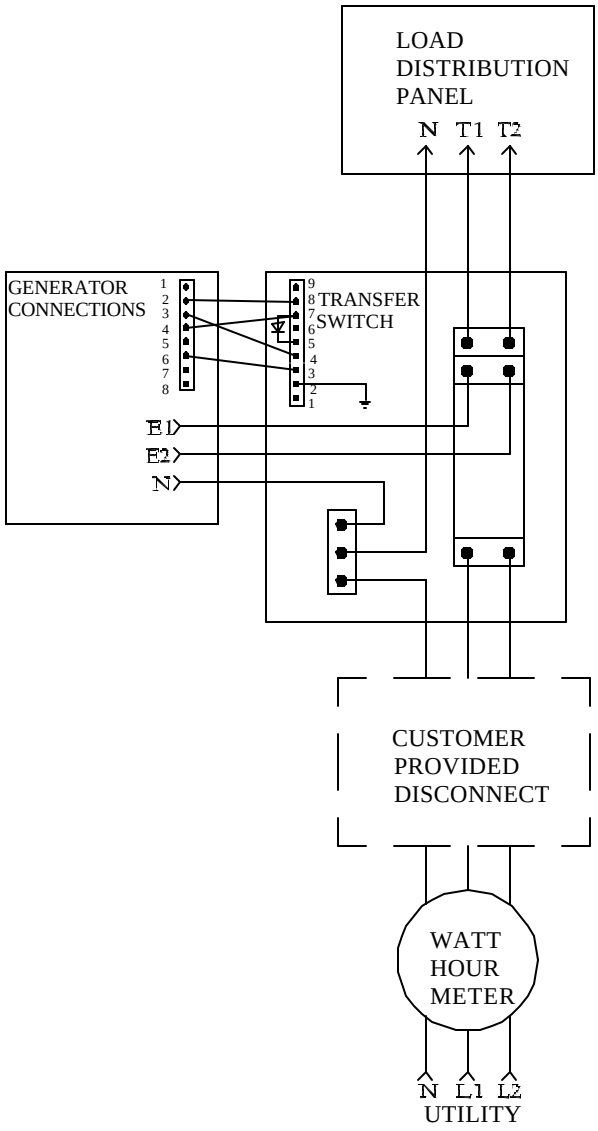

We recommend using an Emergency Distribution Panel when connecting the Lighthouse System to a house or business.

The System Interconnection Diagrams in this Generator Installation & Service Manual should be used when connecting the generator to the transfer switch. When connecting the ATS, refer to the Automatic Transfer Switch Owners/Installation Manual.

NOTICE:

When the alternative method is used. The Transfer Switch is not service entrance rated. A disconnect must be installed, per NEC code, between the transfer switch and the utility supply.

NOTE: Wiring Schematic for 9kW unit only.

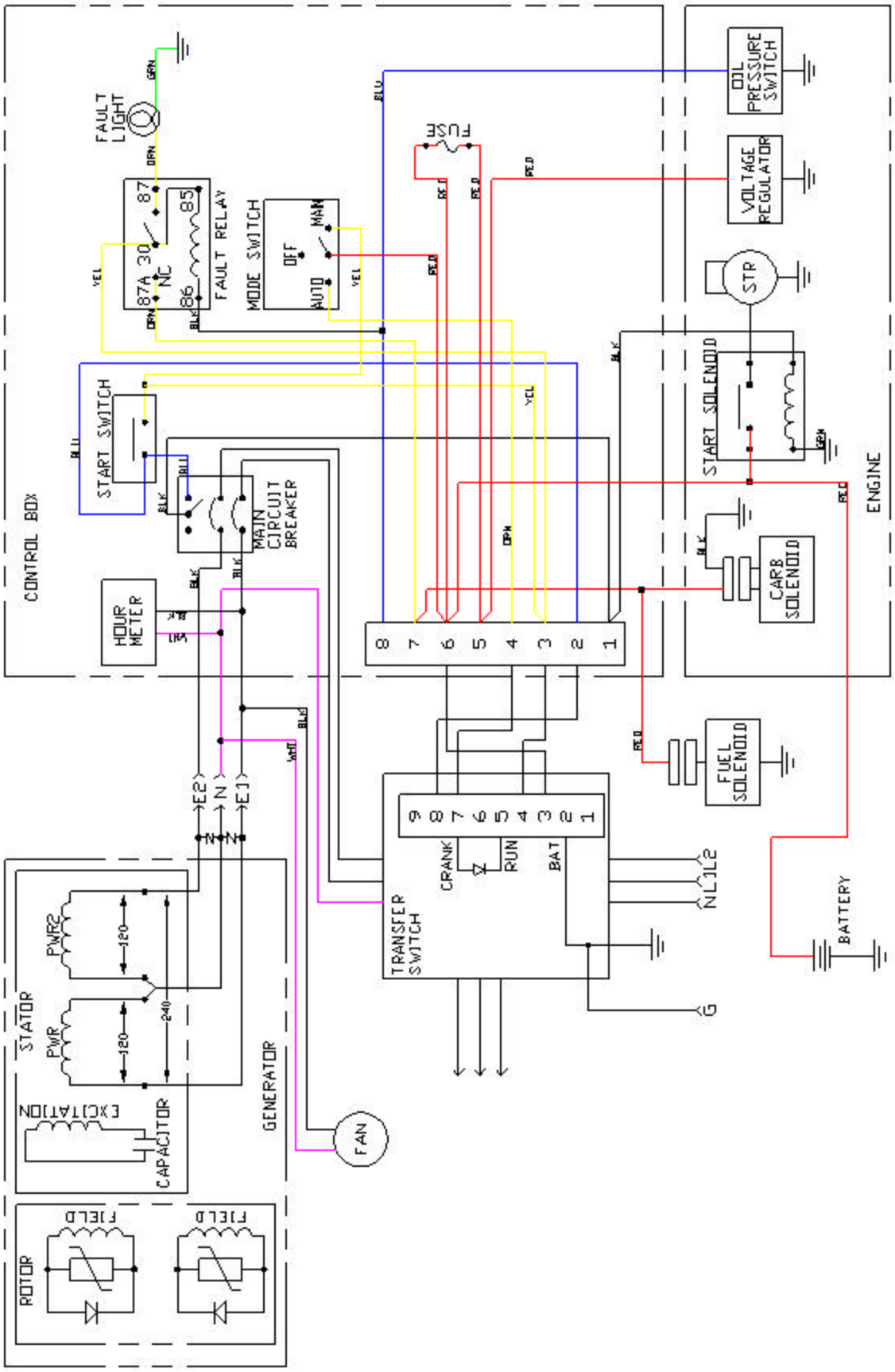

PAGE 7

NOTE: Wiring Schematic for 15kW unit only.

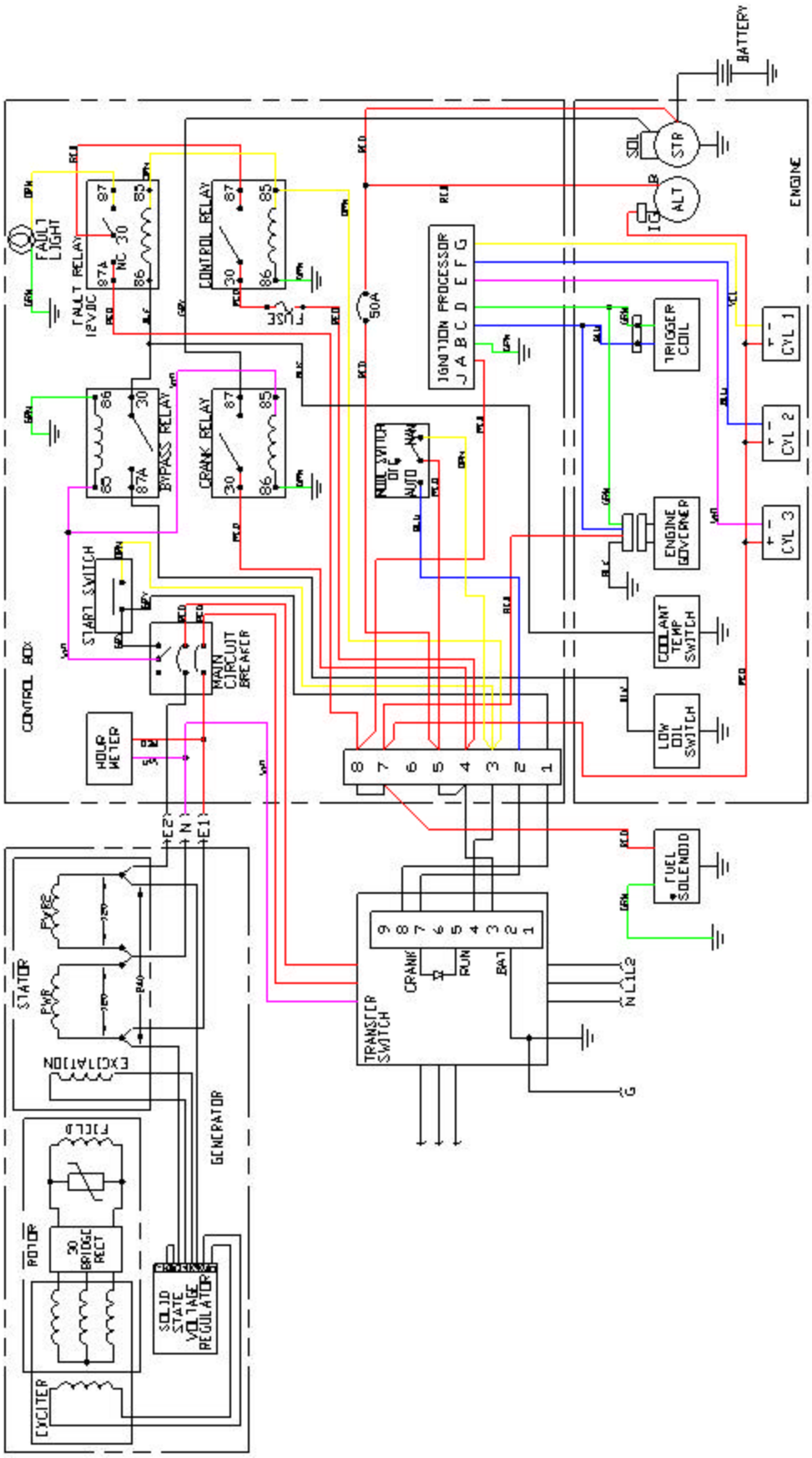

PAGE 8

SYSTEM START-UP CHECK

Inspect for the following:

1. Check for proper alignment of unit. Unit is square, side panels and lid. Unit is level.
2. Sufficient air space around unit, three feet on all four sides. Exhaust is pointed away from windows and doors.
3. Engine crank case is full of oil.
4. Fuel line is properly connected and routed with no leaks. Use soapy water in spray bottle to check.
5. Correct AC wire sizes and connections, and correct routing of line.
6. Correct DC wire sizes and connections, and correct routing of line.
7. Battery properly sized and mounted correctly.
8. Battery charger plugged in and wired correctly.

Start-up Procedure at Generator Location:

1. Make sure Mode switch is in the manual position. With circuit breaker on.
2. Turn the preferred source (utility) supply to the transfer switch off.
3. Connect AC volt and frequency meter to the alternator source.
4. Press the start button on the control panel and hold until engine starts, approximately 3 seconds or for 10 second intervals.
5. If unit fails to start refer to Troubleshooting Section D on page 11.

Engine Checks, No Load:

1. Adjust frequency and no load voltage if necessary.
   (No load voltage range shall be between 240-245. No load frequency shall be between 60-61 Hz).
2. Adjust engine speed up or down for no load specifications, voltage is not adjustable, 9kW units only.
3. Frequency and voltage are pre-set on the 15kW unit. Should not require adjustment.

Check Operation of ATS Switch per Loaded Volts and Frequency specifications:

1. Turn on the preferred source (utility) circuit breaker.
2. Turn on the alternate source (generator) circuit breaker. Mode switch to Auto.
3. Verify that utility (preferred source) acceptable light is on.
4. Verify that the transfer switch on utility (preferred source) light is on.
5. This step will start the generator. Press and hold the Push to Test button until generator (alternate source) acceptable light comes on and stays on. Then release the button.

   This light indicates that the generator is running and that its output voltage and frequency are acceptable. Under typical conditions, the light should come on after about 5 to 10 seconds. If the generator is running and fails to produce the proper voltage and frequency after 60 seconds then a malfunction has occurred, consult page 9 error codes.

6. About 15 seconds after the generator (alternate source) acceptable light comes on, the automatic transfer switch transfers the load from the utility to the generator. The transfer switch on generator (alternate source) light comes on.
7. At this time check the loaded volts and frequency at E1 and E2 (ATS). Voltage should not drop below 220 V and frequency should hold at 60 Hz. If unit does not meet specifications go to Generator Troubleshooting section. Page 15 of the manual.
8. Increase the amperage load by turning on appliances, lights, etc. Try to simulate a load which would be normal usage by the customer.
9. The transfer switch stays connected to the generator for 5 minutes. Then the load is transferred back to the utility. To bypass time delay, press and release the Push to Test button again.
10. After load retransfer to utility, the generator runs 1 minute (without load), then shuts down. The generator acceptable light goes off indicating that generator is off.

Check Automatic Operation of ATS by Shutting off Preferred Source (Utility).

1. The generator starting controls are set for automatic. Mode switch to Auto and circuit breaker on.
2. Turn the preferred source (utility) circuit breaker off. The utility source acceptable light goes off.
3. If the utility remains unacceptable for three seconds the automatic transfer switch cranks and starts the generator.
4. Once the generator starts, the automatic transfer switch waits until the generator voltage and frequency are acceptable. Then the generator source acceptable light comes on.
5. When the generator is acceptable, the automatic transfer switch waits 15 seconds to allow the generator to warm up. Then it transfers the load to the generator. The transfer switch on generator (alternate source) light comes on.
6. Increase the amperage load by turning on appliances, lights, etc. Try to simulate a load which would be normal usage by the customer.
7. Turn the preferred source (utility) breaker back on. When the utility again becomes acceptable the utility source acceptable light comes on.
8. The automatic transfer switch then waits 5 minutes to allow the utility to stabilize. Then it retransfers the load back to the utility. The transfer switch on utility (preferred source) light comes on.
9. After load retransfer the generator will continue to run unloaded for one minute for engine cool down. Then it is stopped. The generator acceptable light goes off.

TROUBLESHOOTING AUTOMATIC TRANSFER SWITCH

DANGER HIGH VOLTAGE; ELECTROCUTION - FLASH HAZARD
Do not replace parts in the transfer switch until both the utility and generator are off. Turn OFF both circuit breakers.

A. The UTILITY acceptable light does not come on when utility power is connected to the automatic transfer switch.

1. Verify that the utility feed is 240 V AC nominal and 60 Hz.
   CAUTION HIGH VOLTAGE PRESENT
2. Verify that the utility feed is wired to the terminal lugs on the bottom of the transfer switch marked L1 and L2.
3. Verify that the utility feed is connected and that its circuit breaker is ON.
4. With ALL POWER OFF, verify that the transfer switch harness is connected properly to the controller (plug at the bottom).

B. Power is connected (UTILITY acceptable light and/or GENERATOR acceptable lights are on) but both TRANSFER SWITCH position lights are off.

1. With ALL POWER OFF, verify that the transfer switch harness is connected properly to the controller (plug at the bottom).

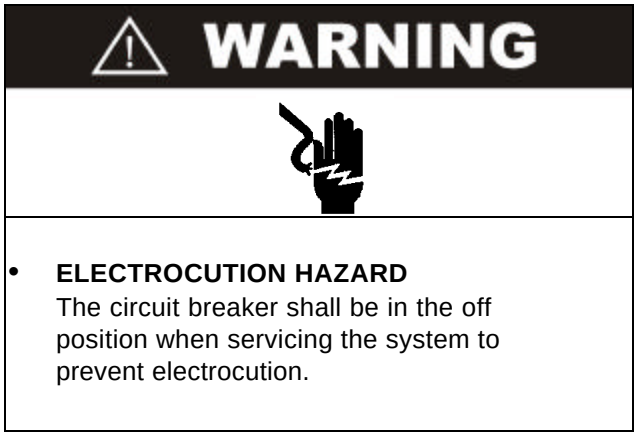

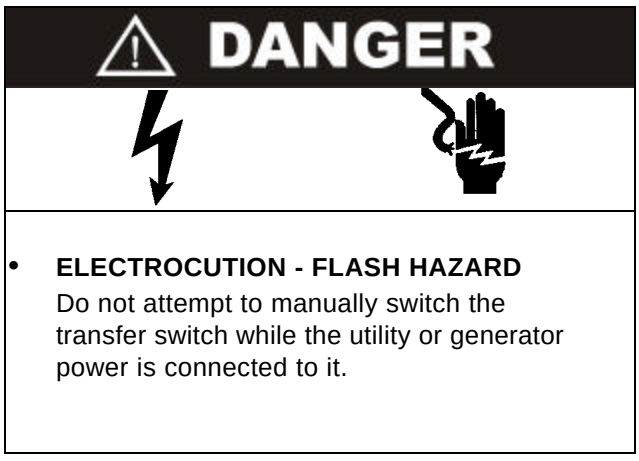

C. Generator does not crank when the utility source fails or when the Push to Test button is pressed.

1. Verify that the generator starting controls are set for automatic operation, and that the generator circuit breaker is on.
2. Verify engine start low voltage wiring between controller terminal block TB7 (plug on the left) and the generator. Check
   that TB7 plug is properly seated in TB7 receptacle.
3. Verify that the generator battery is connected and that the battery voltage meets the generator manufacturer's recommendation.
4. Verify that the correct contact (normally open or normally closed) is being utilized (See the Generator Section).

D. Generator cranks but does not start when the utility source fails or when the Push to Test button is pressed.

1. Verify engine start low voltage wiring between controller terminal block TB7 (plug on the left) and the generator. Check that TB7 plug is properly seated in TB7 receptacle.
2. Verify proper generator operation (See Generator Manual).

E. The automatic transfer switch does not transfer the load to the generator (Generator "On" LED does not illuminate at ATS).

1. Verify that the generator source acceptable light is on. The transfer switch will not retransfer the load to the generator until the generator output is acceptable. If the light is off, verify that the circuit breaker for the generator feed is ON.
2. Wait 15 seconds, there is a 15 second delay after the generator output becomes acceptable to permit the generator to warm up.
3. If the generator source acceptable light still does not come on, see above problems C and D.

F. The automatic transfer switch does not transfer the load back to the utility (Utility “On” LED does not illuminate at ATS).

1. Verify that the utility source acceptable light is on. The transfer switch will not retransfer the load to the utility until the utility source is acceptable and the light is on. If light is off, verify that the circuit breaker from the utility feed is ON.
2. Wait 5 minutes, there is a 5 minute uninterrupted delay on retransfer to the utility.

G. The Generator source acceptable light does not go off after the automatic transfer switch retransfers the load back to the utility.

1. Wait 1 minute, after load retransfer to the utility, there is a 1 minute delay for generator cool down before shut down.

2. Verify proper operation of the generator (See the Generator Manual).

H. Both transfer switch position lights are flashing (this indicates an error condition).

1. Count the number of times the automatic generator exerciser light flashes (repeats after pause). This number is the error code.

2. Error codes:	1 is unused / open
2 Generator failed to start.	See Problems C and D.
3 Generator failed after starting.	See Generator Troubleshooting Section.
4 Generator over or under frequency.	See Generator Troubleshooting Section.
5 Transfer Switch did not transfer the load to the generator.	Service required.
6 Transfer Switch did not transfer the load to the utility.	Service required.
7 Controller error.	Service required.

To clear error code, press and release Push to Test button.

TROUBLESHOOTING INDIVIDUAL CIRCUITS

A. Auto Crank Circuit Normal Run - No Faults

1. Conditions:
   Circuit Breaker On.
   Mode Switch in Auto.
   ASCO Test Button Pressed or Power Outage.

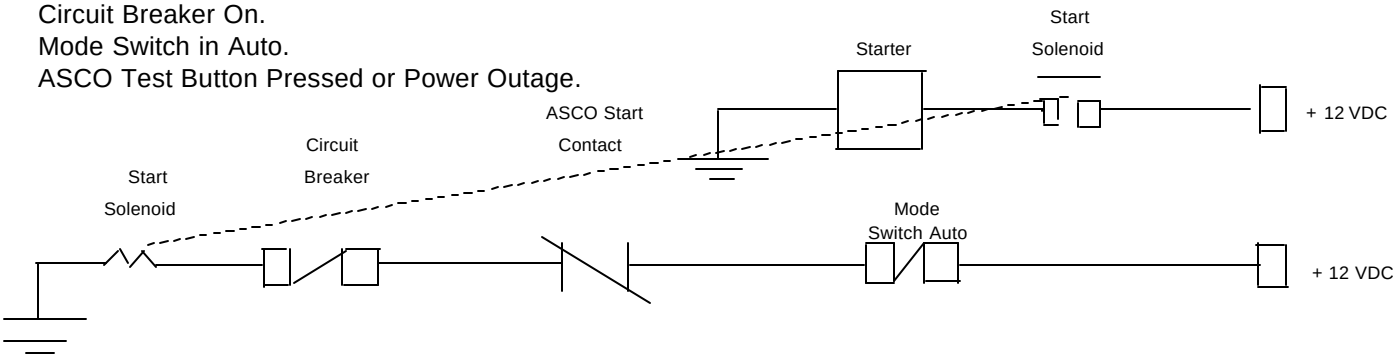

2. Operation: (Picture on page 12).
   a.) A power failure or pressing the ASCO test button applies 12 VDC to the start solenoid coil. Either of these states causes the crank relay to activate closing the crank contact momentarily.
   b.) The start solenoid coil closes the start solenoid contact applying 12 VDC to the starter.
   c.) The starter engages to the engine initiating cranking.

B. Auto Run Circuit Normal run - No Faults.

1. Conditions:
   a.) Circuit Breaker On.
   b.) Mode Switch in Auto.

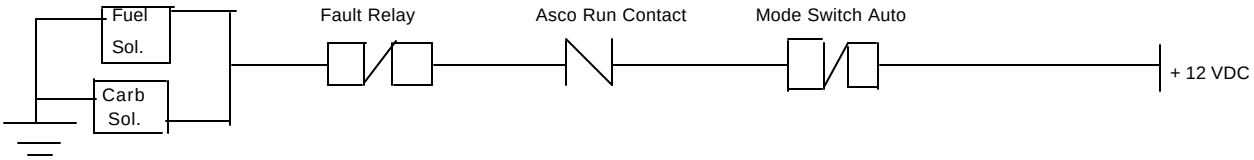

   1.) The engine starts (see crank circuit).
   2.) Voltage is applied to the fuel and carb solenoids as long as the ASCO run contact is closed, and there are no faults. This ASCO run contact is controlled by power outages or test sequencers initiated by the test button.
   3.) Engine runs and generator set produces voltage to load.

C. Manual Crank Circuit Normal run - no Faults.

1. Conditions:
   a.) Circuit Breaker On.
   b.) Mode Switch in Manual Position.
   c.) Start Switch Pressed.

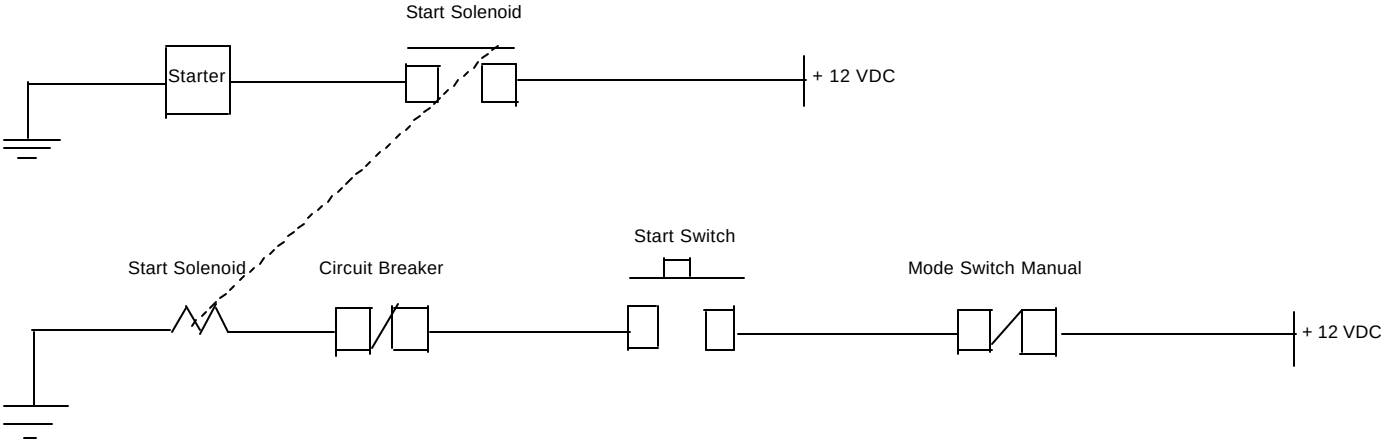

2. Operation:
   a.) Pressing the start switch applies plus 12 VDC to the start solenoid coil.
   b.) The start solenoid coil closes the start solenoid contact applying 12 VDC to the starter.
   c.) The starter engages to the engine initiating cranking.

D. Manual Run Circuit Normal run - no Faults.

1. Conditions:
   a.) Circuit Breakers On.
   b.) Mode Switch in Manual.

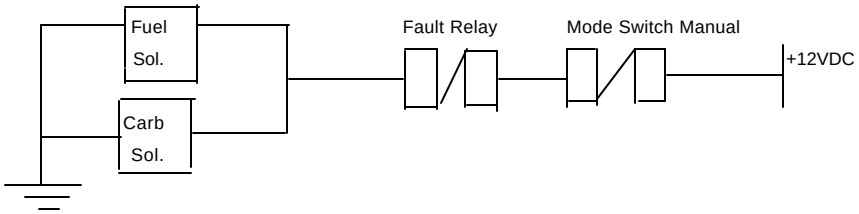

2. Operation: (Picture on page 13).
   a.) The engine starts (see crank circuit).
   b.) Voltage is applied to the fuel and carb solenoids as long as the mode switch is in manual position and there are no faults.
   c.) Engine runs and gen set produces voltage to load.

E. Charge Circuit.

1. Conditions:
   a.) Unit is in one of its operating modes and generator is running.

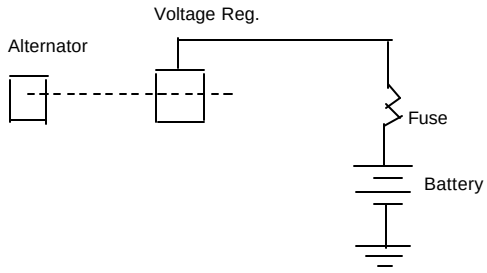

2. Operation:
   a.) The engine is on turning the alternator which produces a voltage to the voltage regulator.
   b.) The voltage regulator regulates the voltage to charge the battery.

F. Fault Circuit Manual Mode

1. Conditions:

   a.) Unit was running, Fault (low oil) occurred.

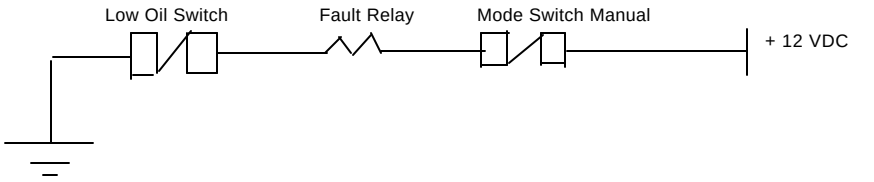

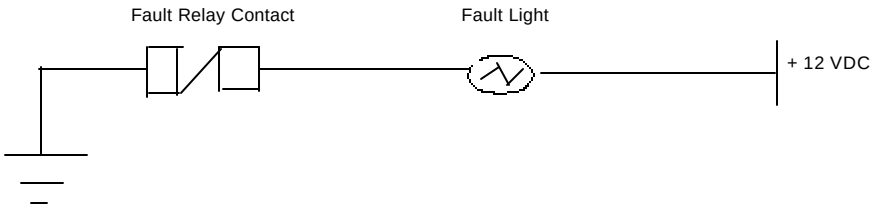

2. Operation:

   a.) Unit is running when the low oil switch closes.
   b.) Fault relay activates shutting unit down and lighting fault light.

G. Fault Circuit Auto Mode

1. Condition:
   a.) Unit was running, Fault (low oil) occurred.

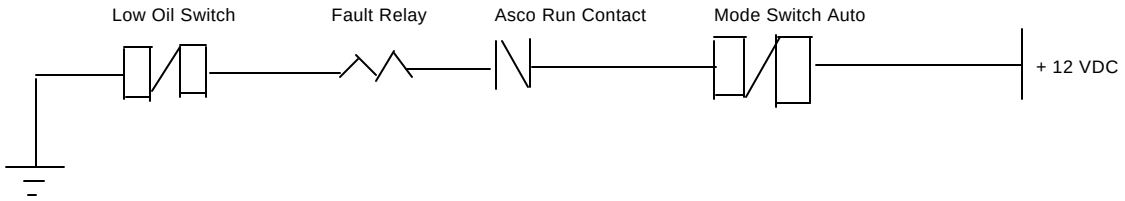

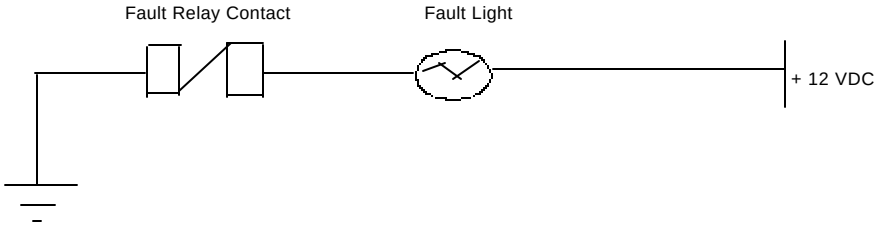

2. Operation:

   a.) Unit is running when the low oil switch closes.
   b.) Fault relay activates shutting unit down and lighting fault light.

ELECTRICAL COMPONENT SPECIFICATIONS

A. Fuel Solenoid:
10.0 - 10.6 Ohms

B. Starter Solenoid:
Small Post to Ground 3.5 - 4.0 Ohms

C. Carb Solenoid:
29 Ohms

D. Fault Relay:
Post 30 to 87a = .2 Ohms
Post 85 to 86 = 90 Ohms
When 12 volts is put through 85 and 86 you will have continuity from 30 to 87.

E. Oil Pressure Switch:
.4 to .5 Ohms

TROUBLESHOOTING INDIVIDUAL CIRCUITS 15kW

Auto Mode Start Operation / Sequence -- Breakers Closed Fuse Good:

1. With battery hooked up there will be 12 volts at following locations; Starter motor terminal; “B” of Alternator, Pin 7 of transfer switch wiring harness; pin 30 of control relay, and pin 30 of crank relay.

2. When transfer switch senses a loss of power and initiates the start sequence the following things will happen:
   A. 12 volts is applied from transfer switch crank contacts, through main breaker to pin 85 of crank relay. This energizes relay applying 12 volts to start solenoid energizing it and engaging starter.

   B. 12 volts is applied from transfer switch crank contacts to pin 85 of bypass relay energizing it. This opens normally closed contacts 87A - 30 of bypass relay removing ground from oil pressure switch circuit.

   C. 12 volts is applied to pin 85 of control relay from run contacts of transfer switch, energizing it. This allows power to flow to pin 30 of fault relay from pin 87 of control relay.

   D. Oil pressure sensor switch is normally closed. This puts ground at pin 87A of bypass relay until pressure builds enough to open oil pressure sensor circuit.

   E. If engine coolant switch is not closed (engine temp ok) it will have no effect. If engine coolant switch is closed (engine overheated) ground will be applied at pin 86 of fault relay. This will energize fault relay shutting engine down and activating fault light.

   F. If oil and temperature are both ok the fault relay will remain closed. 12 volts DC will be applied to fuel solenoid, governor, ignition processor, alternator, and cylinder coils. Engine will run and voltage will be produced.

3. Oil shut down circuit:
   A. Oil sensor is normally closed. This means ground is present when engine starts. During start sequence the coil in the bypass relay is activated opening contact 87A. This eliminates the ground that would normally feed through to pin 86 of fault relay. When the oil pressure builds the oil sensor switch opens removing ground. When the crank sequence ends terminal 87A and 30 make again. However, since ground is not present nothing happens. If oil pressure drops the oil sensor switch makes reapplying ground to terminal 87A of bypass relay on to terminal 86 of fault relay. This activates relay breaking contact 87A killing power to operating circuits and lighting the fault light though terminal 87.

A. Auto Crank Circuit Normal Run - No Faults

1. Conditions:
   a. Circuit breaker on.
   b. Mode switch in auto.
   c. ASCO test button pushed or power outage.

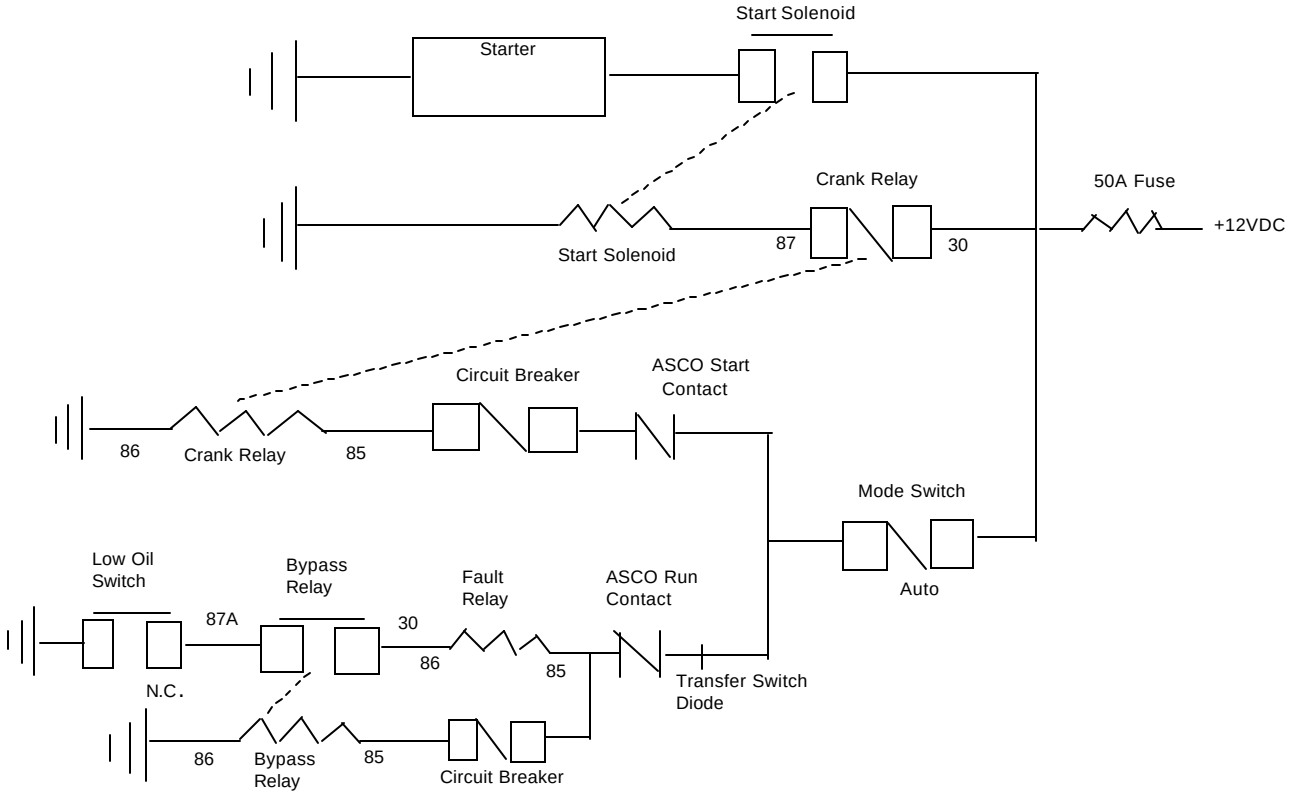

2. Operation:
   a. A power failure or pressing the ASCO test button applies 12VDC to crank relay energizing it.
   b. 12VDC is applied to start solenoid through crank relay.
   c. The starter engages engine initiating cranking.
   d. At same time 12VDC is applied through transfer switch diode through circuit breaker to bypass relay. Opening low oil sensor circuit.
   e. Low oil sensor pressurizes opening switch and removing ground from 87A of bypass relay in preparation of run sequence.

B. Auto run circuit normal run - No faults

1. Conditions:
   a. Circuit breaker on mode switch in Auto.

2. Operation:
   a. The engine cranks (see crank circuit).

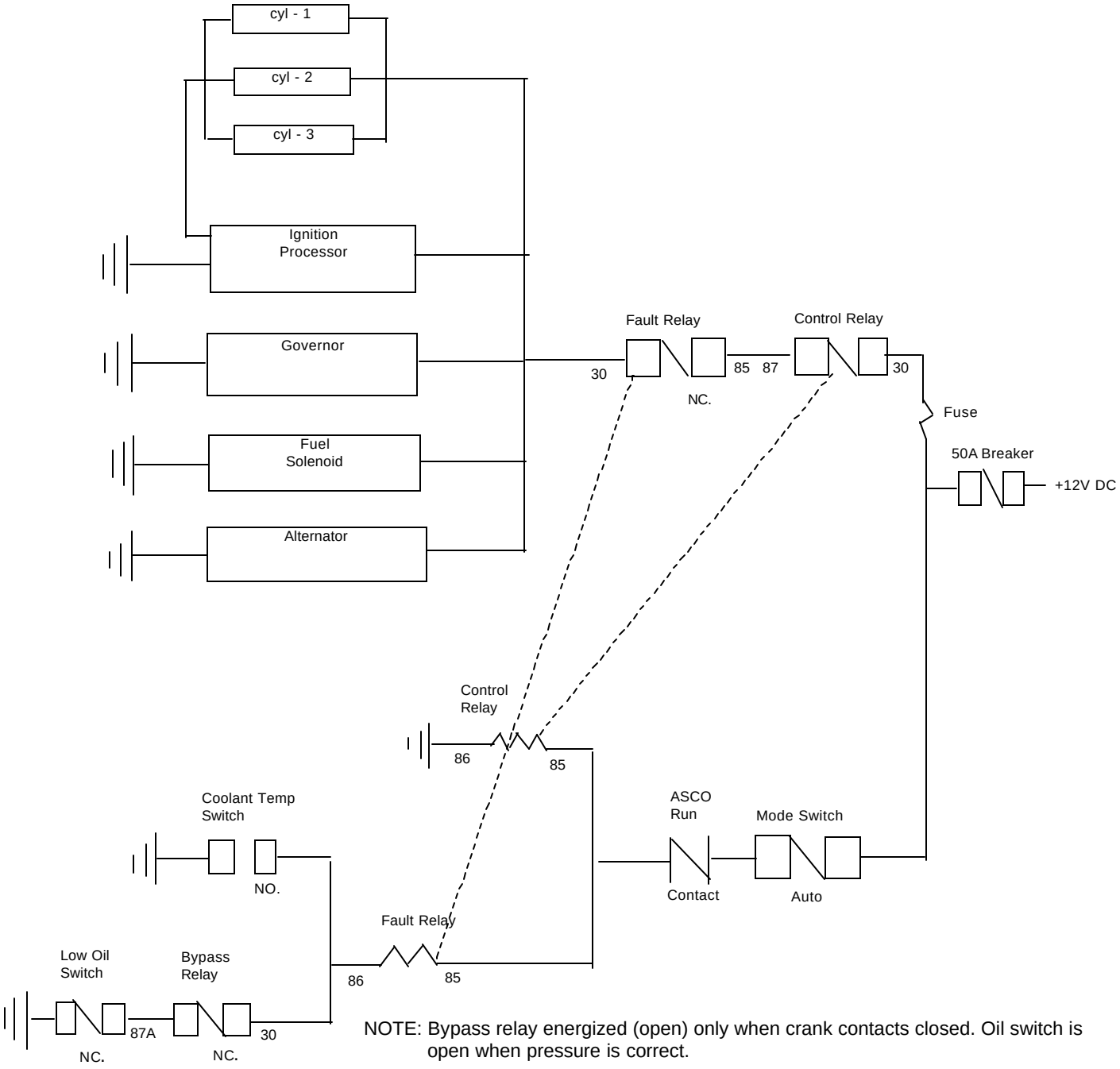

NOTE: Bypass relay energized (open) only when crank contacts closed. Oil switch is open when pressure is correct.

   b. 12VDC is applied to control relay coil closing control relay.
   c. Voltage is applied to fuel solenoid, governor, ignition processor, alternator, and the three cylinder coils as long as the ASCO run contact is closed and there are no faults. The ASCO run contact is controlled by power outages or test sequences initiated by the test button.
   d. Engine runs and generator set produces voltage to load.

TROUBLESHOOTING INDIVIDUAL CIRCUITS 15kW

Manual Mode Start Operation / Sequence -- Breakers Closed Fuse Good:

1. With the battery hooked up there will be 12VDC at the following locations; starter motor terminal, “B” of alternator, pin 85 of control relay, pin 85 of fault relay, pin 30 of control relay and start switch.

2. When the start switch is pushed the following things happen;
   A. 12VDC is applied to pin 85 of crank relay closing relay and allowing 12VDC from pin 30 to pass through to start solenoid. This activates solenoid engaging starter.

   B. Oil pressure sensor switch is normally closed. This puts ground at pin 87A of bypass relay until pressure builds enough to open oil pressure sensor switch.

   C. 12VDC is applied to pin 85 of bypass relay energizing it. This opens normally closed contacts 87A - 30 of bypass relay removing ground from fault relay circuit.

   D. If engine coolant switch is not closed (engine temp ok) it will have no effect. If engine coolant switch is closed (engine overheated) ground will be applied at pin 86 of fault relay. This will energize fault relay shutting engine down and activating fault light.

   E. If oil and temperature are both ok the fault relay will remain closed, 12VDC will be applied to fuel solenoid, governor ECU, ignition processor, alternator and cylinder coils. Engine will run and voltage will be produced.

3. Oil shut down circuit;
   A. Oil sensor is normally closed. This means ground is present when engine starts. During start sequence the coil in the bypass relay is activated opening contact 87A. This eliminates the ground that would normally feed through to pin 86 of fault relay. When the oil pressure builds the oil sensor switch opens removing ground. When the crank sequence ends terminal 87A and 30 make again. However, since ground is not present nothing happens. If oil pressure drops the oil sensor switch makes reapplying ground to terminal 87A of bypass relay on to terminal 86 of fault relay. This activates relay breaking contact 87A, killing power to operating circuits and lighting the fault light though terminal 87.

C. Manual crank circuit normal run - No faults.

1. Conditions:
   a. Circuit breaker on.
   b. Mode switch in manual.
   c. Start switch pressed.

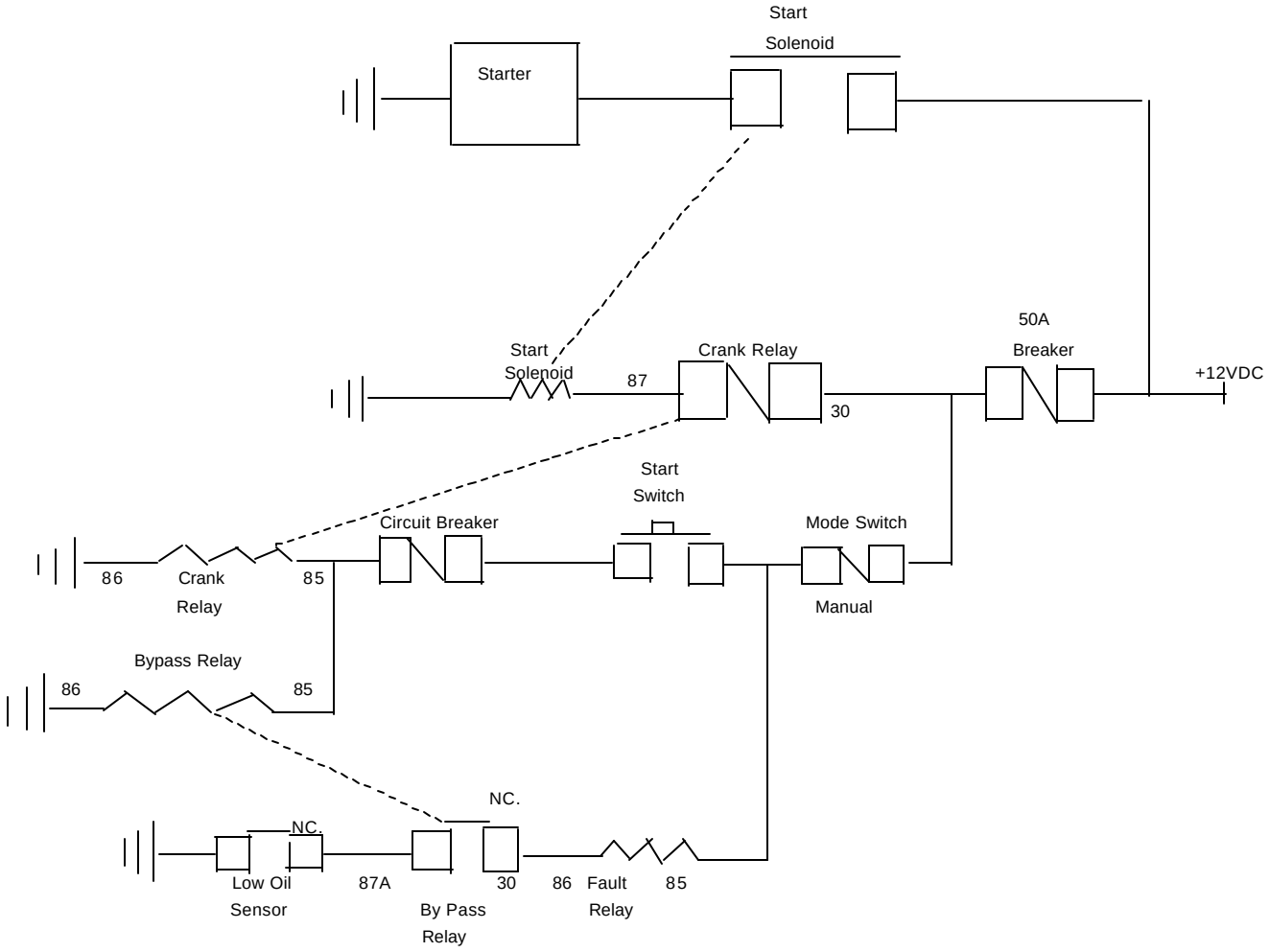

2. Operation:
   a. Pressing the start switch applies 12VDC to crank relay coil.
   b. Crank relay closes applying 12VDC to start solenoid.
   c. Start solenoid closes applying 12VDC to starter.
   d. Starter engages engine initiating cranking.
   e. At the same time 12VDC is applied to the bypass relay opening the low oil sensor circuit.
   f. Low oil sensor pressurizes, opening switch and removing ground from 87A of bypass relay in preparation of run sequence.

D. Manual run circuit normal run - No faults.

1. Conditions:
   a. Circuit breaker on.
   b. Mode switch in manual.

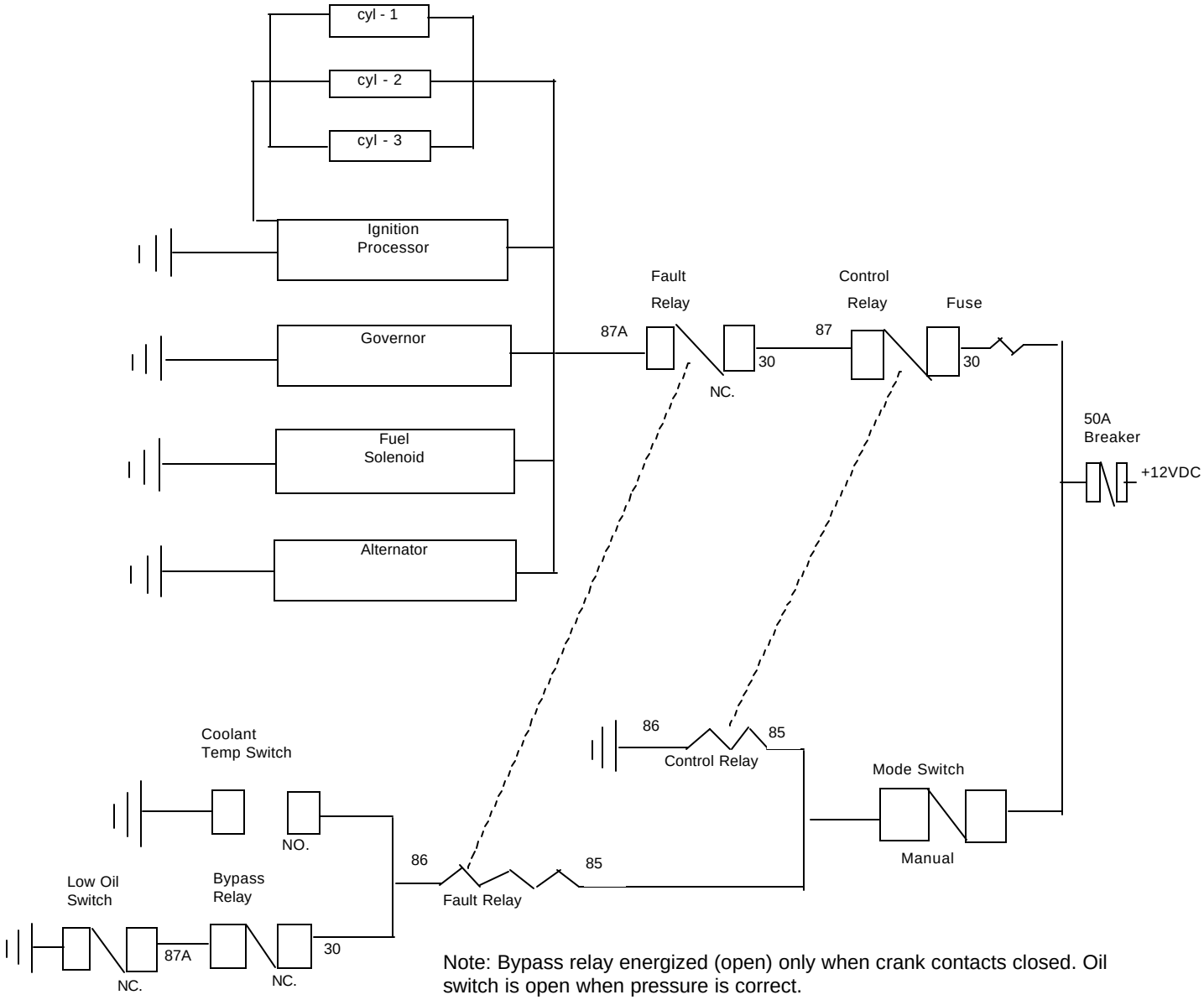

Note: Bypass relay energized (open) only when crank contacts closed. Oil switch is open when pressure is correct.

2. Operation:
   a. The engine cranks (see crank circuit).
   b. 12VDC is applied to control relay coil closing control relay.
   c. 12VDC is applied to fuel solenoid, governor, ignition processor, alternator, and the three cylinder coils as long as there are no faults.
   d. Engine runs and generator set produces voltage to load.

TROUBLE SHOOTING GENERATOR SECTION 9kW

A. Generator has no Output, Volts or Frequency:

1. Re-excite generator section with 12 volt battery. Control cover will have to be removed so excitation can be done by touching positive and negative wires to black (pos.) and white (neg.) main power posts.
2. Test capacitors, insuring they discharge and charge at the same rate, or that they have the proper MF readings.
3. Check Ohm's resistance reading for Stator and Rotor.
   Rotor - 5.9-6.0 Ohm's each winding.
   Stator - Black to White .30-.50 Ohm's
   Red to Red 1.4 to 1.6 Ohm's
   Green to Green 1.4 to 1.6 Ohm's

B. Generator will not pull load:

1. Check engine speed by measuring no load Volts or Hz readings.
   Volts - 240-245
   Hz - 60-61
2. Inspect engine for dirty or oil soaked air filter. Spark plug gap .030, plug wires connected correctly.
3. Fuel flow should be checked at utility side of regulator with manometer. Pressure should be 7 to 14" water column, or 4 to 8 oz. flow.
4. Diode on rotor has opened. Should only read continuity through diode in one direction.
5. Rotor has partial broken or open winding. Check resistance (Ohm's) of windings on rotor.
6. Dead short or open winding in stator. Check resistance (Ohm's) of windings in stator.

C. Engine will not start:

1. Check oil level, and low oil sender unit.
2. Check battery for full charge.
3. Check to make sure fuel is turned on. Fuel pressure should be 7 to 14" water column, or 4 to 8oz. flow.
4. Check starter solenoid. Should have reading between big posts. Should get a reading between the positive and little post when starter is engaged.
5. Check starter motor.

DISASSEMBLY AND ASSEMBLY INSTRUCTIONS 9kW UNIT

1. Remove lid by taking nyloc nuts and bolts off lid support arms. Close lid and remove mounting screws on back for hinges. Lift lid off unit and set a side. Disconnect battery cables and remove battery.
2. To remove front cover, turn middle two and bottom two screws one half turn counter clockwise to unlock. The top two are just pins, pull out on front cover and remove.
3. To remove engine end panel first make sure fuel is shut off at fuel supply. Remove fuel line from regulator. Remove all screws on end panel. Pull end panel out two inches to access mounting bolts for oil cooler, remove bolts and panel.
4. To remove generator end panel remove screws and panel.
5. To remove back panel disconnect AC and DC power cables. Remove screws and take off panel.
6. Remove the muffler heat shield.
7. Remove stator assembly. Unbolt stator isolators from stator bracket. Place block of wood under engine adapter. Use a three hook puller or rubber mallet to work stator assembly off unit.
8. Remove rotor assembly. Remove rotor bolt. With rubber mallet strike rotor shaft bearing at a 90' angle to break wedge loose. Hold on to rotor with free hand, when wedge breaks loose remove rotor.
9. Engine may be removed from frame at this time.

ASSEMBLY INSTRUCTIONS 9kW UNIT

1. Install four isolators to engine torque to 10-17 ft./lbs. (13.56 to 23.05Nm).
2. Install ground wire (star washer with lock) (starter side) two holes same side closest to shaft.
3. Attach engine to frame, four 5/16 nyloc nuts and flat washer. Torque to 10-17 ft./lbs.(13.56 to 23.05Nm). Attach ground wire to frame with star washer under wire head.
4. Bolt engine adapter to engine with solid side of adapter to the top, put blue loctite on adapter whiz bolts and torque to 10-17 ft./lbs.(13.56 to 23.05Nm).
5. Install rotor on engine shaft. Install 13mm nut and flat washer on rotor bolt, loctite engine end of bolt. Install rotor bolt and torque to 10 to 17 ft./lbs.(13.56 to 23.05Nm).
6. Install stator to adapter start lower bolt on exhaust side first with J clamp and nut with flat washer. J hook out, horizontal to frame, twist to 90 degree. With rubber mallet tap stator housing onto rotor bearing.
7. Loosen screw on governor spring retainer. Install manifold shield tightening screw governor spring retainer and installing shield screw on exhaust side.
8. Install three remaining adapter to gen head bolts nuts and flat washers torque to 10 to 17 ft./lbs.(13.56 to 23.05Nm).
9. Attach control box to top of stator housing.
10. Stator hook up; black to black. Remove nut and washer from right hand stud. Both small black ring terminals then second black, make sure terminals do not touch each other. Remove nut and washer two small white wires to one of the white posts. Attach ground (starwasher).
11. Engine wire hook up. Put harness into J hook. Attach blue wire to oil pressure sensor. Connect voltage regulator lead. Connect black insulated wire to solenoid. Connect red ring terminal to empty stud of starter and large red battery cable, pointing to the left.
12. Install muffler and muffler shield. Note; when tightening muffler hanger bolt do not put hole in muffler.

    NOTE: WHEN PUTTING IN THE #10-16 x .50 SCREWS WITH RUBBER WASHER DON'T OVER TORQUE. ONLY TIGHTEN UNTIL RUBBER WASHER FLATTENS OR 10 inch lbs. (1.13Nm)
13. Attach (genset) end panel, back side muffler shield first. Line muffler up closer to top. Tighten muffler clamp torque 8 to 12 ft./lbs.(10.84 to 16.27Nm).
14. Attach back panel; screw back panel to end panel first. Attach manifold to muffler shield. Attach muffler shield to back panel.
15. Set engine end panel to unit; hook up fan. Hook up red wire (solenoid) to regulator. Attach panel to back panel.
16. Oil cooler top hose goes to top fitting. Bottom hose goes to bottom fitting.
17. Hook up fuel line to regulator (clamp).
18. Attach ground wire (starwasher) attach propane ground wire.
19. Attach battery box. Feed cables into battery box.
20. Attach front panel.
21. Attach lid. Attach lid supports.
22. Test unit. Refer to page 9 and 10.

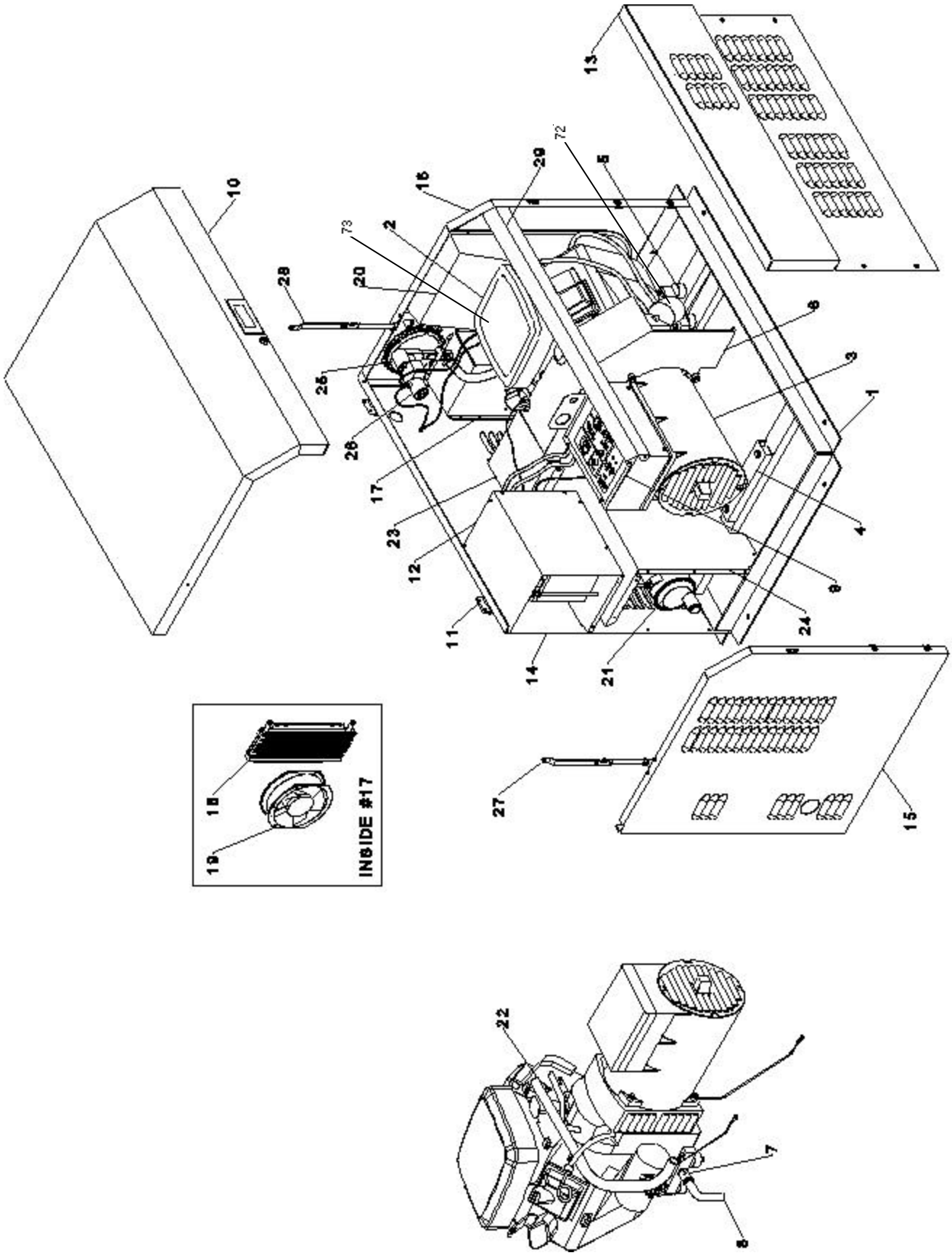
INSIDE #17

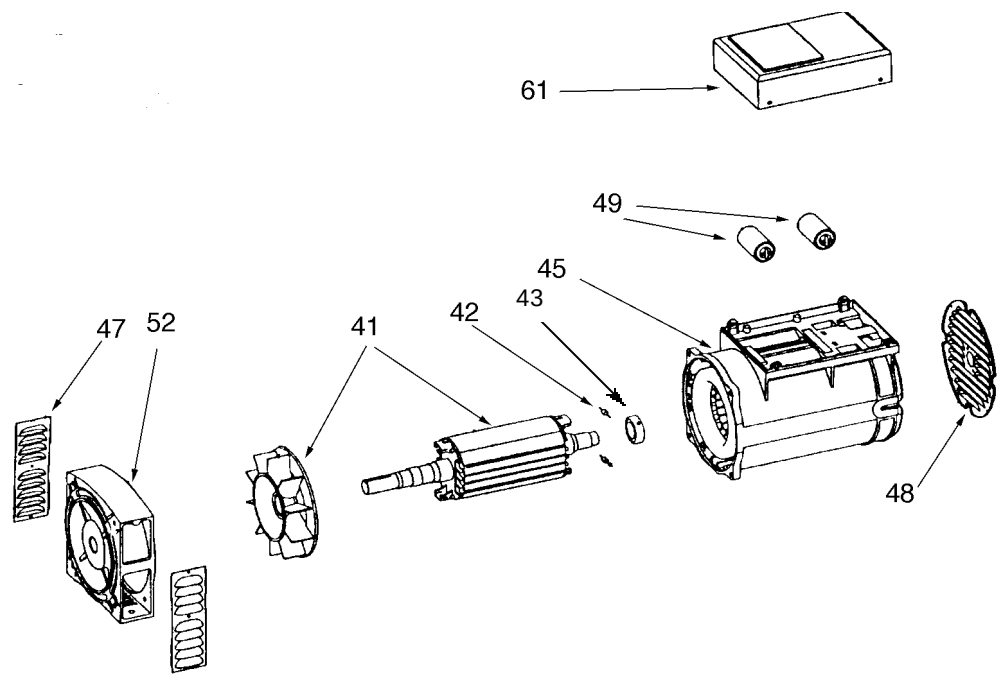
61
49
45
43
42
41
47
52
48

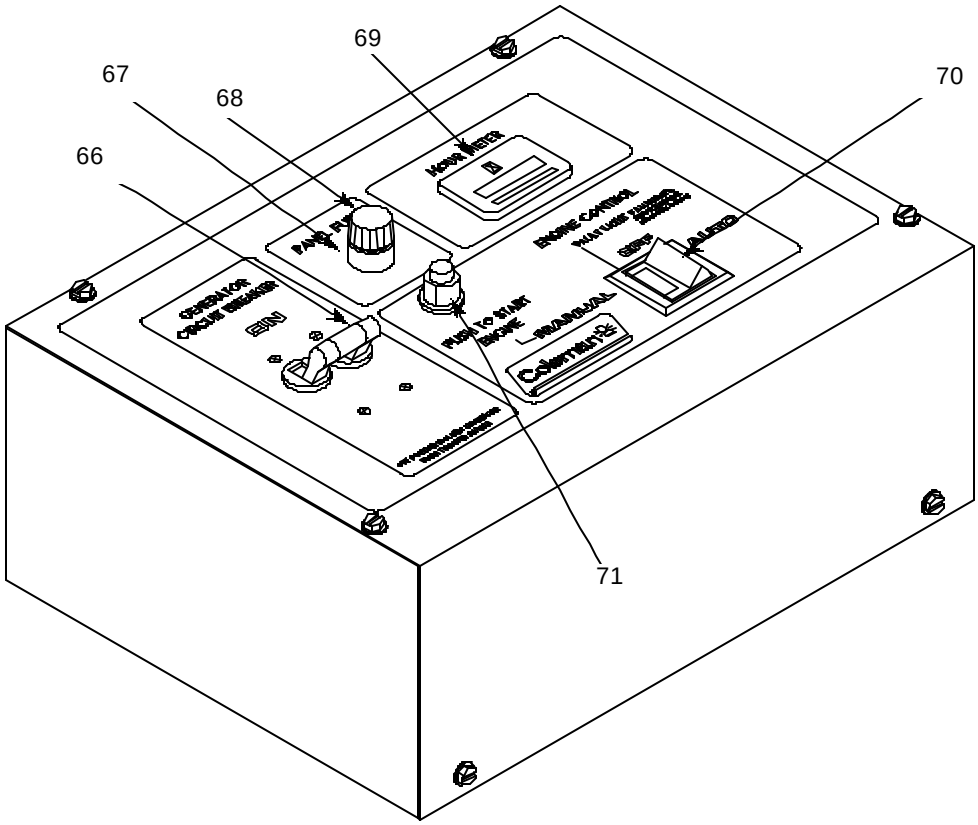
69
67
68
70
66
71

SERVICE PARTS LIST — 9kW LIGHTHOUSE — MODEL # PM0639011

Ref.#	Part Number		Description	Qty.
1.	74121		Frame 9kW	1
2.			Engine 570cc B&S Vanguard LPG	1
3.	74122		Generator Head 9kW	1
4.	74123		Assy. Stator Bracket	1
5.	74124		Isol. Vib 1.50 OD x 1.00 .69 Stud	6
6.	74125		Assy. Shield Air 9kW	1
7.	73190		Drain, Oil FSTEX 7400-02-9909	1
8.	74126		Hose Oil Drain	1
9.	74127		Panel Wired 9kW	1
10.	74128		Assy, Lid 9kW	1
11.	74129		Hinge Slip Joint	2
12.	73131		Assy, Panel Battery Box 9kW	1
13.	74132		Panel, Front 9kW	1
14.	74133		Panel, Back 9kW	1
15.	74134		Panel, Stator End, 9kW	1
16.	74135		Panel, Engine End, 9kW	1
17.	74136		Box, Oil Cooler	1
18.	74137		Oil Cooler Hayden 001243	1
19.	74138		Fan 178 CRMAC 178x150 x50mm	1
20.	74139		Intake Duct	2
21.	74155		Muffler 9kW	1
22.	74156		Manifold 9kW	1
23.	74157		Shield, Manifold 9kW	1
24.	74158		Shield, Muffler 9kW	1
25.	74159		Regulator KN039-0004	1
26.	74160		Solenoid LPG/NG AFC 171	1
27.	74162		Support Lid LH	1
28.	74161		Support Lid RH	1
29.	74163		Front Brace 9kW	1
30.	73194	NOT SHOWN	Battery Charger Guest 2608	1
31.	74164		Lock with Key	1
32.	74165		Lid Hook for Lock	1
33.	73204	NOT SHOWN	Starter Solenoid	1
34.	74166	NOT SHOWN	Assy. Varistor 140V	2
41.	74167		Rotor 8.5kW -10kW	1
42.	73224		Diodes Rotor	2
43.	74168		Bearing	1
45.	74169		Stator	1
47.	74130		Louvered Side Panel	2
48	Not Used		Louvered End Panel	
49.	73188		Capacitor, 35 mfd 450 V	2
52.	74188		Engine Adapter	1
61.	Not used		Generator Head Cover	
62.	73195	NOT SHOWN	Control Panel / Transfer Switch	1
63.	74189	NOT SHOWN	100 Amp TS Unit	1
64.	74190	NOT SHOWN	200 Amp TS Unit	1
65.	74191	NOT SHOWN	NEMA 1 Enclosure	1
66.	73196		Circuit Breaker 40A 2 Pole	1
67.	73197		Fuse Holder	1
68.	73198		20 Amp Fuse 250V	1
69.	74187		Hour Meter	1
70.	73199		Switch SPDT Light	1
71.	73200		Switch Momentary	1

SERVICE PARTS LIST **9kW LIGHTHOUSE** **MODEL # PM0639011**

Ref.#	Part Number		Description	Qty.
72.	73201		Oil Filter	1
73.	73202		Air Filter	1
74.	74164	NOT SHOWN	Handle W / Keys	1
75.	92216000	NOT SHOWN	Paint (Spray Can)	1
76.	74533	NOT SHOWN	Oil Heater 75 Watt / 120 Volt	1

TROUBLESHOOTING GENERATOR SECTION 15kW UNIT

A. Generator has no output: Volts or Frequency

1. Re-excite the generator with a 12 volt battery, by touching just for an instant, pins 3 & 1 on the voltage regulator with a 30 Ohm resistor in series. Positive to pin 3, negative to pin 1 on regulator board.
2. Generator has no output after being excited. Check connections per attached drawings.
3. Check Ohm readings for stator and rotor.
   Stator windings:
   Exciter - Disconnect wire from terminal 1 on regulator board. Check across that wire to pin 3 on regulator board. Reading should be 15 - 17 Ohm.
   Auxiliary winding - Unfasten wires from pin 4 on regulator board. Use Ohm meter to determine which wire goes directly to V1. on the connector board. Measure from the other wire that was on pin 4 to pin 3 on regulator board. Reading should be 1.4 - 1.6 Ohm.
   Main winding - Measure between U2 & W1 and between V1 & V2 on connector board. Each should be .08 to .10 Ohm's.
   Rotor
   Excitor - There are 3 small red wires soldered in with the diodes. Should read 1.3 to 1.5 Ohm between any of the 3. Should read .7 to .8 Ohm between any of the small red wires and either of the large white wires.
   Main Winding - There are two large white wires on end of rotor soldered in with diodes. Should read 9 -10 Ohm across these.

CAUTION: Reading may very depending on accuracy and calibration of your meter. Use these readings as a general guideline.

B. Low Voltage / Frequency at no load:

1. Units are preset and adjusted at factory for proper voltage and frequency (240 - 245 volts & 59.5 - 60.5 Hz).
2. Both the generator and the governor on this unit will attempt to increase output to proper level. Check the engine RPM's, should be approximately 3700 RPM. If the RPM's are low, try to physically open up the governor. If the RPM's increase the problem is in the governor, replace governor. If the RPM's are correct, calibrate the voltage using the volts potentiometer on the regulator board. **CAUTION !** Move potentiometer very slowly. Small movement clockwise produces large increase in voltage.
3. Check windings for possible short.

C. High Voltage / Frequency at no load:

1. Check engine RPM's, should be approximately 3700. If RPM's are high try to physically close the governor. If the RPM's decrease and voltage comes down the problem is in the governor, replace governor.
2. If the RPM's are correct calibrate the voltage using the volts potentiometer on regulator board. **CAUTION !** Move potentiometer very slowly. Small movement counterclockwise produces large decrease in voltage.

D. Generator will not pull load:

1. Check engine speed by measuring no load voltage and hertz readings.
   Volts - 240 - 245
   Hertz - 59.5 - 60.5
2. Inspect engine for dirty or oil soaked air filter. Check spark plug for correct gap (.030). Plug wires connected correctly.
3. Fuel flow should be checked at utility side with manometer 7 - 14" water column.
4. Check fuel pressure at utility side 4 - 8 oz. psi.
5. Check diodes on rotor. Should only have continuity in one direction.
6. Rotor has partial short or open winding. Check Ohm reading on rotor.
7. Short or open winding in stator. Check Ohm reading on stator.

E. Engine will not start:

1. Check oil level and low oil sender unit.
2. Check battery for full charge.
3. Check to make sure fuel is turned on. Fuel pressure should be 7 to 14” water column or 4 to 8 oz psi.
4. Check starter solenoid. Should have reading between big posts. Should get reading between the positive and little post when starter is engaged.
5. Check starter motor.

DISASSEMBLY INSTRUCTIONS - 15kW UNIT

1. Remove lid by taking nyloc nuts and bolts off lid support arms. Remove locking screw from panel beside hinge. Slide lid of hinge pins.
2. Remove front cover by removing screws from panel at top on each side. Turn middle and bottom screws one half turn counterclockwise to unlock. Set front aside.
3. Remove front top brace by removing the two screws on each end of brace.
4. Remove generator end panel by removing the 4 screws from the back panel.
5. Make sure gas is turned off. Disconnect gas line from valve. Disconnect gas valve wires. Disconnect gas line from carberator.
6. Remove battery compartment lid. Disconnect cables and remove battery.
7. Remove the generator head cover. Disconnect the three wires coming from the control panel.
8. Remove cover from control box, disconnect AC & DC power cords. Disconnect wire block connector.
9. Remove 8 screws from back panel that hold the control and battery box and set aside.
10. Remove the 4 nuts holding the exhaust to the manifold.
11. Remove the screws from the back panel that hold it to the engine end panel.
12. Remove the back panel with muffler assembly and set aside.
13. Remove the 4 screws that hold the protecting screen over the generator air vent. Remove the 6 hex drive bolts inside that fasten generator rotor plate to engine plate. Remove the 8 bolts that fasten generator housing to engine housing. Remove the 2 bolts fastening generator to frame. The generator may now be removed.
    CAUTION: Unit is very heavy.
14. Drain radiator, remove hoses from engine. Remove radiator and panel and set aside.
15. Remove 2 bolts fastening engine to frame. Engine may now be removed.

ASSEMBLY INSTRUCTIONS - 15kW UNIT

1. Attach the 2 mounting brackets to the engine with 4 bolts. Torque 7 - 10ft./lb.
2. Attach antifreeze overflow bracket to mounting bracket on front side of engine.
3. Attach black ground wire to engine block on back side.
4. Remove governor from old engine and attach to new engine.
5. Attaching generator head. Remove the 4 screws holding the protective screen on the front of the generator.
6. Align the generator and the engine. Start 2 bolts through the generator into the engine housing on each side. Do not tighten. Attach lift bracket through the generator into the engine housing with 2 bolts. Finger tighten only.
7. Align the rotor plate on the generator with the engine plate. The generator flange must fit inside the engine plate. Start the 6 hex drive bolts through the generator flange into the engine plate. Finger tighten bolts only.
8. Raise unit and install 2 bottom bolts through the generator head into engine housing. Tighten all 8 bolts, torque to 30 - 50 ft./lb.
9. Make sure the generator flange fits snug into engine plate. Tap bearing on end of generator if necessary to move rotor forward. Generator flange should be approximately 1/32” inside engine plate. Tighten the 6 hex drive bolts inside generator, torque to 10 - 17 ft./lb.
10. Replace protective screen on generator. Place unit on metal frame and attach with 4 bolts.
11. Follow disassembly instructions in reverse to complete assembling metal cabinet.

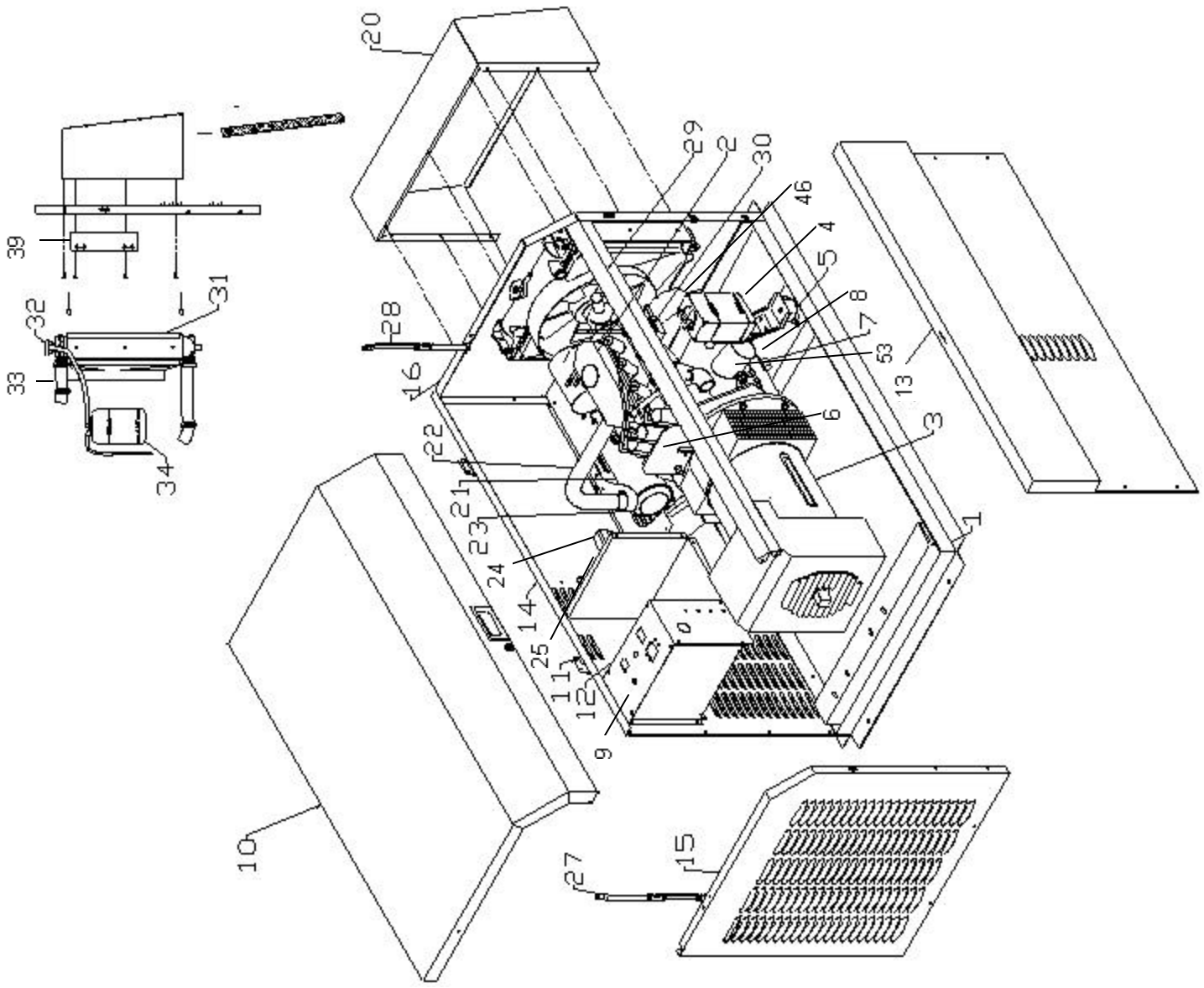
20
29
2
30
46
4
5
8
7
53
13
6
3
1
28
16
22
21
23
24
14
25
11
12
9
10
15
27
39
31
32
33
34

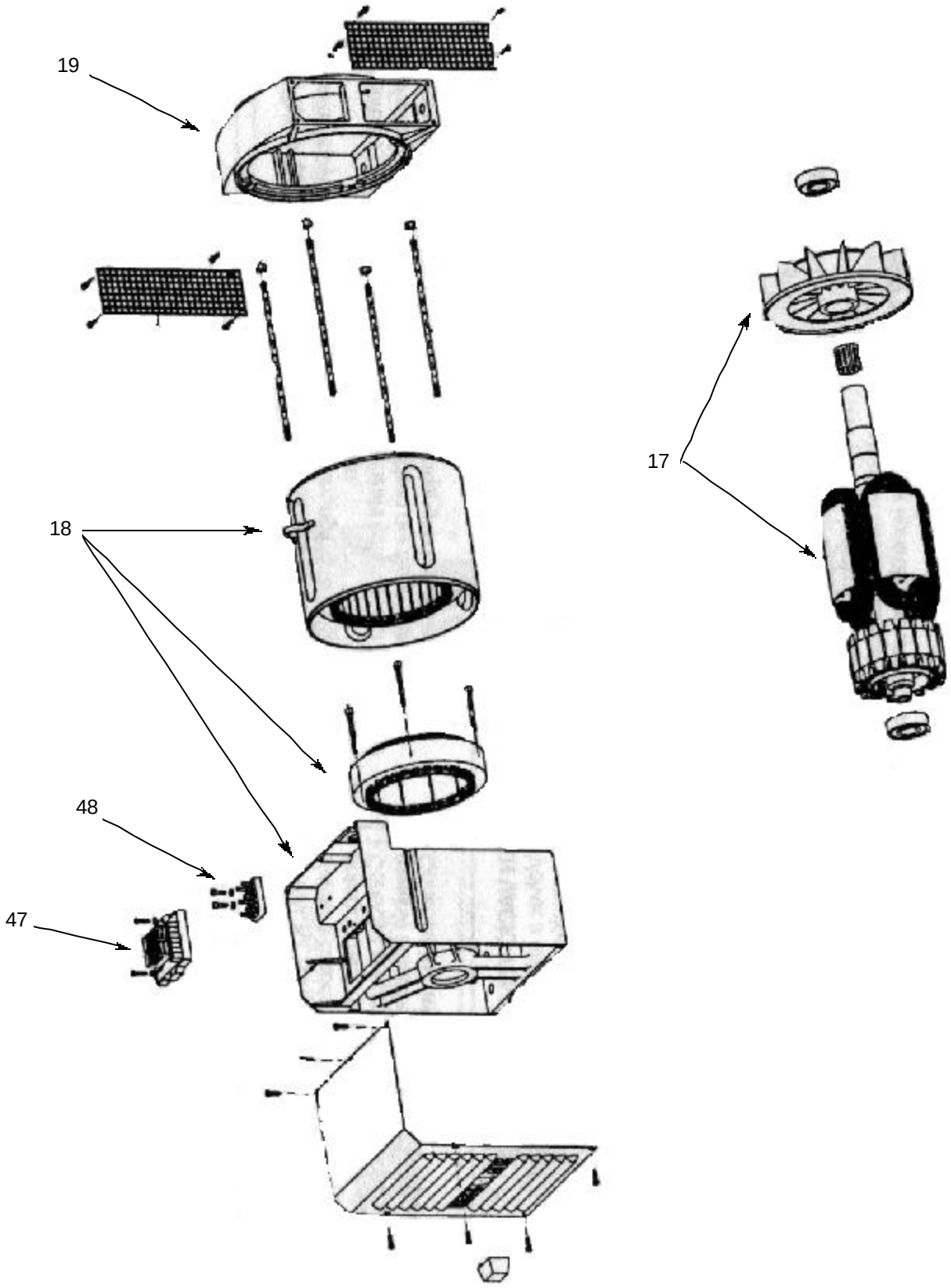
19
18
48
47
17

SERVICE PARTS LIST **15kW LIGHTHOUSE** **MODEL #**
PM0621512

Ref#	Part Number		Description	Qty.
1.	74140		Frame 15KW HSB	1
2.	74233		Engine BS&D 950 Daihatsu	1
3.	74141		Head Gen Mecc Alte 15KW	1
4.	74180		Mount Eng. Daihatsu 950	2
5.	74172		Isolator, 30 Duro ebco 4690	4
6.	74171		Lift Hook 15KW HSB	1
7.	73190		Drain, Oil FSTEX 7400-02-9909	1
8.	74182		Hose Oil Drain	1
9.	74152		Panel, Wired PM0621512	1
10.	74145		Assy. Lid 15 KW HSB	1
11.	74129		Hinge Slip Joint	2
12.	74148		Box, Wired PM0621512	1
13.	74154		Panel, Front 15KW HSB	1
14.	74150		Panel, Back 15 KW HSB	1
15.	74151		Panel, Stator End 15KW HSB	1
16.	74178		Assy, Engine End Panel 15KW HSB	1
17.			Rotor 15KW	1
18.			Stator 15KW	1
19.			Adapter 15KW	1
20.	74175		Panel Radiator Deflector 15KW	1
21.	74143		Muffler 15KW HSB	1
22.	74142		Assy, Manifold 15KW HSB	1
23.	74144		Assy, Muffler Shield	1
24.	74234		Solenoid	1
25.	74159		Regulator KN039-0004	1
26.	73203	NOT SHOWN	Circuit Breaker 60 Amp 2 pole w/Aux. Switch	1
27.	74162		Support Lid LH	1
28.	74161		Support Lid RH	1
29.	74235		Front Brace 15KW	1
30.	74236		Governor, Woodward LCS	1
31.	74147		Radiator Daihatsu 950G	1
32.			Radiator Cap	1
33.	57459		Radiator Hose, Upper	1
34.			Over Flow Bottle	1
35.	74149	NOT SHOWN	Panel Battery Box Cover 15KW HSB	1
36.	73217	NOT SHOWN	Circuit Breaker 50 Amp Auto-Reset	1
37.	74153	NOT SHOWN	Relay 12 VDC Siemens VF4-45F11	1
38.	74173	NOT SHOWN	Lock Hooked Pawl	1
39.	74174		Bracket Radiator Mount 15KW	1
40.	74176	NOT SHOWN	Spark Arrest Clamp	1
41.	74177	NOT SHOWN	Bracket Coolant Tank	1
42.	73194	NOT SHOWN	Battery Charger Guest 2608	1
43.	74185	NOT SHOWN	Switch Momentary	1
44.	74186	NOT SHOWN	Switch SPDT Light	1
45.	74187	NOT SHOWN	Hour Meter	1
46.	73189		Air Cleaner	1
47.			Electronic Regulator SR7	1
48.			Terminal Board	1
49.	57462	NOT SHOWN	Mixer LPG/NG Daihatsu 950G	1
50.	57458	NOT SHOWN	Bracket Overflow Bottle 950G	1
51.	74153	NOT SHOWN	Fault Relay 12VDC Siemens VF4-45F11	4
52.	53625	NOT SHOWN	Diode, Transfer Switch, IN4004 400V 1.0A	1
53.	74051		Oil Filter	1

SERVICE PARTS LIST **15kW LIGHTHOUSE** **MODEL #** **PM0621512**

Ref#	Part Number		Description	Qty.
54.	92216000	NOT SHOWN	Paint Aerosol Almond (Touch Up Paint)	1
55.	74164	NOT SHOWN	Handle W / Keys	1
56.	825133BS	NOT SHOWN	Lower Radiator Hose	1
57	3200001	NOT SHOWN	Lower Hose Heater 1” 375 Watt (TEMRO)	1

SERVICE MANUAL 25kW LIGHTHOUSE



KATOLIGHT CORPORATION
3201 THIRD AVENUE
P.O. BOX 3229
MANKATO, MN 56001

PRODUCT SERVICE TECHNICAL SUPPORT
PH: 800-325-5450
FAX: 507-625-2247

07/10/01

25kW LIGHTHOUSE SERVICE MANUAL

WARNING: 1. This manual is only intended for Katolight Master Reps or Distributors.
2. Only Qualified Installers.
3. Before reading this manual please read all manuals accompanying unit.

The installation of this equipment must be done by licensed electrician's or contractor's and licensed gas technician or plumber's. Installation must be completed in conformance with NEC and local electrical and building codes.

TABLE OF CONTENTS ---------- PAGE 1
INTRODUCTION ---------- PAGE 2
GENERATOR TERMINOLOGY ---------- PAGE 3
UNIT SPECIFICATIONS ---------- PAGE 4
JUNCTION BOX WIRING INSTRUCTIONS ---------- PAGE 5
25kW WIRING SCHEMATIC ---------- PAGE 6
BATTERY INSTALLATION ---------- PAGE 7
LUBRICATION AND COOLING ---------- PAGE 8
CARBURETOR ADJUSTMENTS & FUEL REQUIREMENTS ---------- PAGE 8
FUEL CONSUMPTION & CONTROL PANEL OPERATION ---------- PAGE 9 - 10
CONTROL PANEL FAULT CONDITIONS ---------- PAGE 10
UNIT OPERATION TROUBLESHOOTING ---------- PAGE 11
CONTROLLER TROUBLESHOOTING ---------- PAGE 12 - 17
25kW UNIT WIRING SCHEMATIC ---------- PAGE 18
ENCLOSURE ASSEMBLY DRAWING ---------- PAGE 19
EXHAUST SIDE ASSEMBLY DRAWING ---------- PAGE 20
FILTER SIDE ASSEMBLY DRAWING ---------- PAGE 21
PARTS LIST FOR PAGES 19 - 21 ---------- PAGE 22
EXHAUST SIDE ENGINE & FRAME ASSEMBLY DRAWING ---------- PAGE 23
FILTER SIDE ENGINE & FRAME ASSEMBLY DRAWINGS ---------- PAGE 24
REGULATOR & STARTER CONNECTION DRAWINGS ---------- PAGE 25
ALTERNATOR WIRING & MIXER-GOVERNOR ASSEMBLY DRAWING ---------- PAGE 26
GENERATOR WIRE BOX TOP VIEW ---------- PAGE 27
JUNCTION BOX DRAWING ---------- PAGE 28
PARTS LIST FOR PAGES 23 - 28 ---------- PAGE 29
CONTROL BOX DRAWING ---------- PAGE 30
CONTROL BOX AND GENERATOR PARTS LIST ---------- PAGE 31
GENERATOR EXPLODED VIEW ---------- PAGE 32

INTRODUCTION

General Information

Read this manual carefully before operating or servicing generators to familiarize yourself with proper safety, operation and maintenance procedures. FAILURE TO COMPLY WITH INSTRUCTIONS IN THIS MANUAL COULD RESULT IN PERSONAL INJURY, PROPERTY DAMAGE AND/OR VOIDING OF THE WARRANTY. KATOLIGHT WILL NOT BE LIABLE FOR ANY DAMAGE BECAUSE OF FAILURE TO FOLLOW THESE INSTRUCTIONS. Check the unit over for any signs of freight damage.

This manual is not all inclusive. Each operating unit has a manual specific to its use.

Basic Generator Operations (Simplified)

The Lighthouse is manufactured for our customers to supply reliable emergency electrical power. The generator is a compact water cooled unit, designed to supply the power for your critical needs when utility power fails. Electric power is produced in the Lighthouse generators by a magnetic field rotating inside a stator. This is a brushless four pole type generator. To start producing electricity, it is the residual magnetism in the rotor's metal core which induces a small amount of current in the stator. This current is fedback into the rotor (increasing the magnetic field and the amount of current induced) until the rotor's magnetic field reaches saturation. At this point there is sufficient energy present in the stators output windings to operate the unit at its rated capacity.

Usage

The Lighthouse generator is connected with the home electrical distribution panel(s), via the transfer switch. It is intended that this unit be used in the following manner.

When the normal electrical service is interrupted the Automatic Transfer Switch (ATS) will signal the generator control circuit to start the engine. When the generator output voltage reaches a predetermined level, the ATS will automatically switch the load distribution panel to the generator output power. After utility service has been restored, the ATS switches the load back to the utility power and the generator shuts down after a short cool down period.

GENERATOR TERMINOLOGY

ALTERNATING CURRENT	Alternating current or AC is the flow of electrons in a conductor, first in one direction then in the other.
AMPERES (AMPS)	The rate of electron flow through a conductor is measured in amperes, which is a measurement of electrons flowing past a given point at a given time.
DIRECT CURRENT	Direct current or DC is the flow of electrons in only one direction through the conductor.
HERTZ	A unit of frequency equal to one cycle per second.
OHM	One Ohm is the amount of resistance that will permit one ampere of current to flow in a conductor when one volt of electro-motive force is applied.
ROTOR	The rotor is essentially an electro-magnet, since the flow of direct current through its windings creates a magnetic field around those windings. The strength of the magnetic field can be increased by (a) forming the wires into a coil, (b) increasing the wire size, or (c) increasing the current flow through the wires.
SINE WAVE	A wave diagram (sine wave) of alternating current shows that current goes from zero value to a maximum positive value, reversing itself again and returns to zero. Then it goes to a maximum negative value, reversing itself and returns to zero.
STATOR	The number of turns of wire in a stator winding are determined when it is manufactured. A typical stator assembly may be a single-phase type, or a three phase type. The greater the number of turns of wire in a stator winding, the greater the induced EMF when magnetic lines of flux cut through the windings.
VOLTS	The volt is the amount of electro-motive force (EMF) that will result in a current (electron) flow of one ampere through a resistance of one Ohm.
WATTS	One watt is equal to one ampere of current flow under pressure of one volt. Calculate electrical power by using the formula: WATTS = VOLTS x AMPERES.

UNIT SPECIFICATIONS

Generator

Rated Wattage - (Standby) 25,000 Watts at 1.0PF LPG
25,000 Watts at 1.0PF NG
Voltage - 120/240 volts
Rated Current - 208/104 amps LPG
Frequency - 60 HZ
Power Factor - 1.0
Max. Ambient Temp Rise - 105°C
Insulation class - H

Note: Rated wattage is specified at sea level, 60°F ambient temperature and propane fuel (with2500BTU/Cu.Ft).

Rated wattage decreases approximately 3.5% for each 1000 Ft. above sea level and approximately 1% for each 10°F above 60°F ambient temperature. For operation with Natural Gas (1000BTU/Cu.Ft). rated power will decrease approximately 10% below the propane rating.

Engine

Ford 2.5 - Liter
Type - Water cooled inline (4 cylinders)
RPM - 1800
Displacement - 2500cc (153in^3)
Bore X Stroke: 3.78in X 3.40in.
Compression Ratio: 9.37:1
Valve Arrangement - Overhead Valve
Governor - Electronic, Isochronous
Ignition System - Solid State
Starter - 12vdc, Solenoid Shift
Alternator - 12vdc, 90A
Oil Capacity - 4.0 qt. (3.79L) without filter, 4.50 qt (4.26L) with filter change.
Oil Filter - FL 300 (Ford)
Radiator capacity - 2.5 gallons, (9.46L). Shipped with 50/50 mix of water and propylene glycol antifreeze.
Spark Plug - Motorcraft AWSF 52C.
Battery - BCI Group 26, minimum 550 CCA, side posts for ring terminals on battery cables.

Fuel

Minimum Content Requirements:
1000 BTU’s per cubic foot for Natural Gas(NG)
2520 BTU’s per cubic foot for Liquid Propane Vapor (LPG)
Fuel supply pressures must be between 4oz (7” w.c.) and 6oz (11” w.c.) at inlet to the unit.

Consumption at Full Load:
345 cubic feet per hour of Natural Gas (NG)
3.77 gallons per hour of Liquid Propane Vapor (LPG)
(1 gallon is equal to 4.26 pounds LPG)

Dimensions

79”L x 34”W x 43”H (See next page for installation drawing).
Shipping Weight: 1525 lbs.

INSTALLATION

Site Selection and Preparation

Location - The unit should be placed in an area that allows plenty of room around the generator for ventilation and maintenance. Approximately three feet on each side. Covering or restricting the air passages on the sides of the generator units will cause the unit to overheat. Examples would be landscaping, piles of leaves, or piles of snow. Leaving a three foot open area around the unit will help in preventing any over heating. When placing the generator, the direction of the exhaust should be pointing away from windows, doors and any ventilation systems. **Do not install indoors.** The recommended method to remove the generator from the pallet and place it on a pad is to use a forklift, running the forks through the cross tubes.

Cement Pad - The unit should be bolted on a wire reinforced cement pad that is four to six inches thick. Holes have been placed in the frame for this purpose as shown in the diagram. The unit is mounted to the frame on rubber isolators to make the unit run as vibration free as possible.

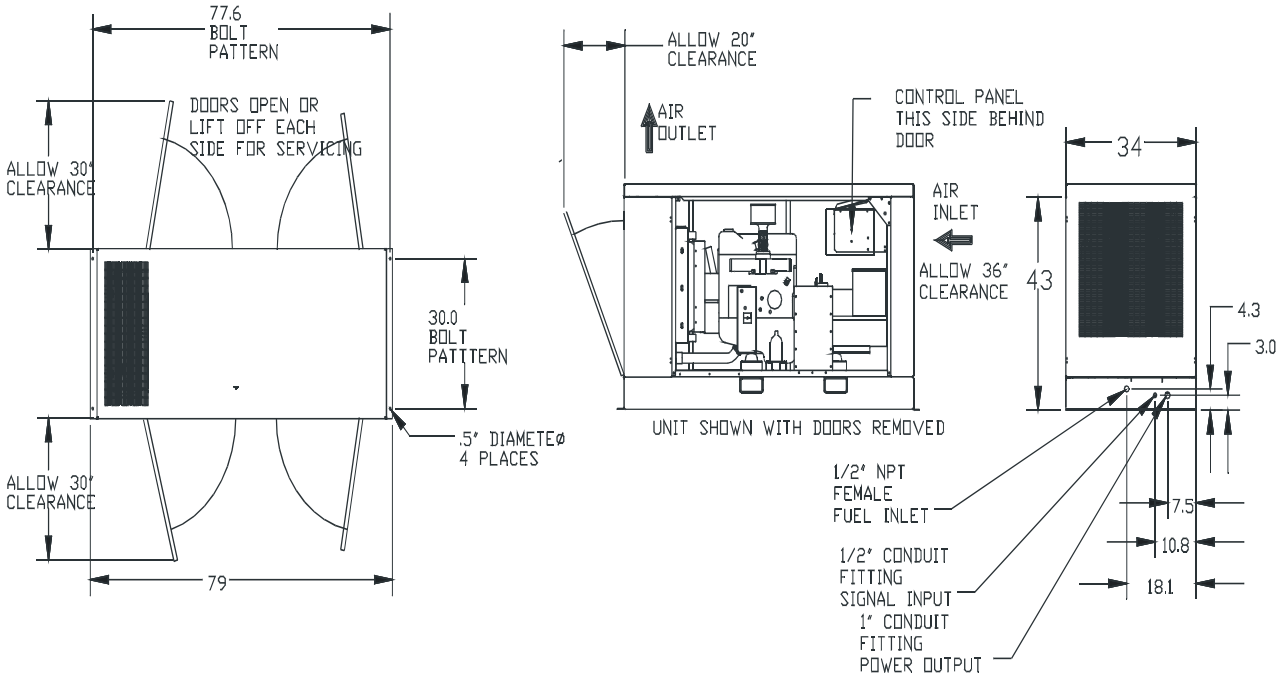

JUNCTION BOX CONNECTIONS

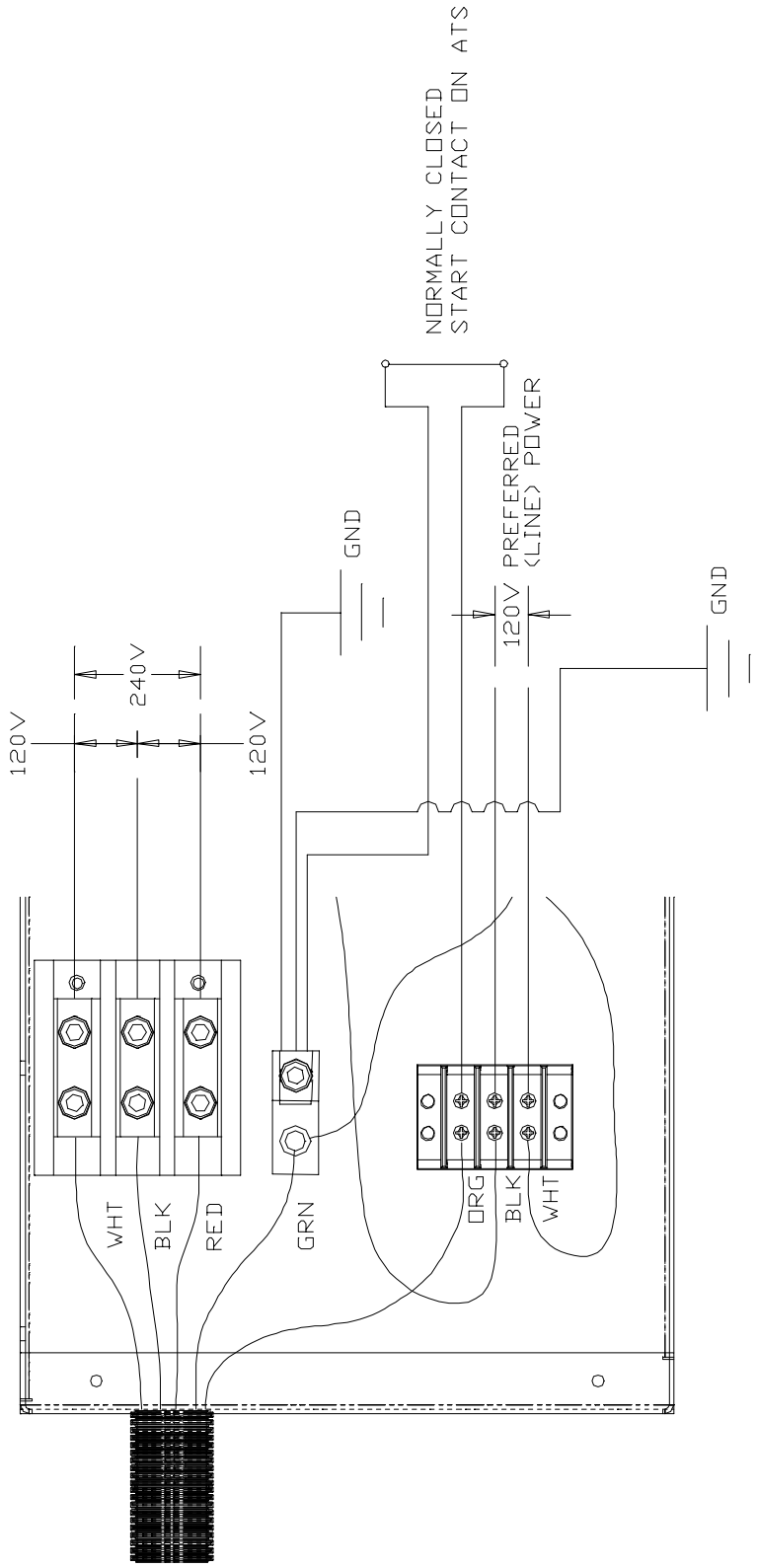

We recommend using an Emergency Distribution Panel when connecting the Lighthouse System to a house or business. The System Interconnection Diagrams in this Generator Installation & Service Manual should be used when connecting the generator to the transfer switch. When installing and connecting the ATS, refer to the Automatic Transfer Switch Owners/Installation Manual to make all connections.

BATTERY INSTALLATION

Minimum recommended battery size is a BCI Group 26 with a minimum of 550 CCA (Cold Cranking Amps). Place the battery in the battery rack as shown and secure using the hold down hardware provided. Once the battery has been placed and tied down with the battery hold down bar, connect the leads to the respective battery post. Always connect the (red) positive cable first and the negative (black) cable last. When disconnecting remove negative cable first and then positive lead last. The 25kW has ring terminals on the battery cables for use with side post batteries.

Note: The battery charger will automatically charge the battery to keep a full charge. This charger is connected to your normal electrical supply to keep your battery charged while the generator is idle.

The charger is not intended to recharge a battery which has become completely discharged.

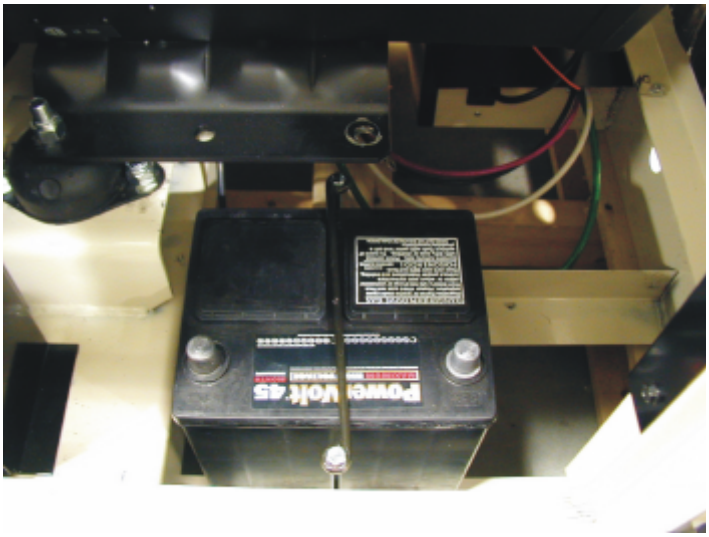

⚠ WARNING



- ACID BURN
  Battery electrolyte fluids comprised of sulfuric acid that can be very dangerous and cause severe burns.
- Do not allow this fluid to contact eyes, skin, clothing, etc. If contact or spillage does occur, flush the area with water immediately.

⚠ WARNING



- EXPLOSION HAZARD
  Batteries contain sulfuric acid (when filled) and may emit explosive gasses.
- Read and follow safety instructions accompanying the battery.
- Keep sparks, flames and cigarettes away.
- Hydrogen gas is generated during charging and discharging.
- Always shield eyes, protect skin and clothing when working near batteries.

⚠ CAUTION



- Caution: Failure to connect and disconnect in the proper sequence can cause equipment damage. Ensure there is a clean, tight fit from the cables to the post.

LUBRICATION AND COOLING

Check oil level before start-up. The unit is shipped with the proper type of oil in the crankcase for operation above 40°F, (30W motor oil). Follow the engine manufacturer's recommendations for oil at temperatures below 40°F. Check oil periodically to ensure that unit is properly lubricated. Follow the engine manufacturer's recommended service schedule. Engine oil capacity is 4.0qt. (3.79L) without a filter change and 4.50qt. (4.26L) with a filter change.

Before initial start-up of the unit, check the coolant level in the radiator. Low coolant levels can cause insufficient engine cooling and possible engine damage. The unit is shipped with a 50/50 mix of water and propylene glycol antifreeze in the radiator. Check coolant levels and concentration periodically, especially in extreme climates. Follow engine manufacturer's recommended service schedule. If radiator is drained and refilled, make sure to disconnect bypass hose to purge air from radiator and engine head water passages.

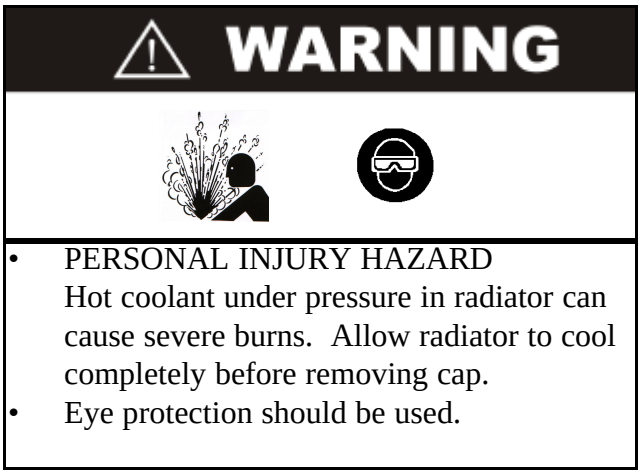

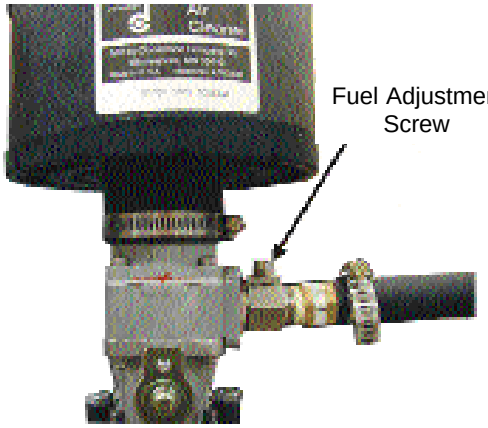

CARBURETOR ADJUSTMENTS

Natural Gas Settings: Lighthouse units are tested with Natural Gas before they leave the factory. If Natural Gas is to be used no adjustments are required. The fuel select switch, located on bottom of control panel, should be in the NG position. The NG position is with the switch depressed away from front of control panel.

Propane Vapor Settings: The fuel select switch position is with the switch depressed toward the front of the control panel. (Fuel select switch is shown in picture of control panel on next page). The main adjustment screw is located on the side of the fuel mixer, as shown in illustration above. Start unit at no load and verify proper operation. Loosen jam nut on adjusting screw. Slowly load unit to full load, adjusting load screw counter-clockwise as required to achieve maximum power. Once smooth full load operation is achieved, tighten adjustment screw jam nut, then return unit to no load to verify proper operation. **Connection to gas supply MUST BE done by a licensed plumber or licensed gas technician and must comply with applicable building and local codes.**

FUEL REQUIREMENTS

For the best operation of the Lighthouse unit the fuels used should have a minimum content of 1000 BTU's per cubic foot for Natural Gas (NG) and 2520 BTU's per cubic foot for Liquid Propane Vapor (LPG). Contact local fuel supplier for local BTU content. Fuel supply pressures must be between 4 oz. (7" w.c.) and 6 oz. (11" w.c.) at the inlet to the unit.

FUEL CONSUMPTION

The Lighthouse 25kW at full load consumes 345 cubic feet per hour of Natural Gas (NG) and 3.77 gallons per hour of Liquid Propane Vapor (LPG).

⚠ WARNING

- EXPLOSION HAZARD
  Natural Gas is highly explosive.
- Natural Gas is lighter than air and will collect in high places.
- Extreme caution should be taken when working on a new installation or while performing general maintenance.
- Do not smoke or use open flame during maintenance.

⚠ WARNING

- EXPLOSION HAZARD
  Liquid Propane is highly explosive.
- Liquid Propane vapor is heavier than air and will collect in lower places.
- Extreme caution should be taken when working on a new installation or while performing general maintenance.
- Do not smoke or use open flame during maintenance.

CONTROL PANEL

The control panel contains a mode switch with a fault light, display panel and main circuit breaker.

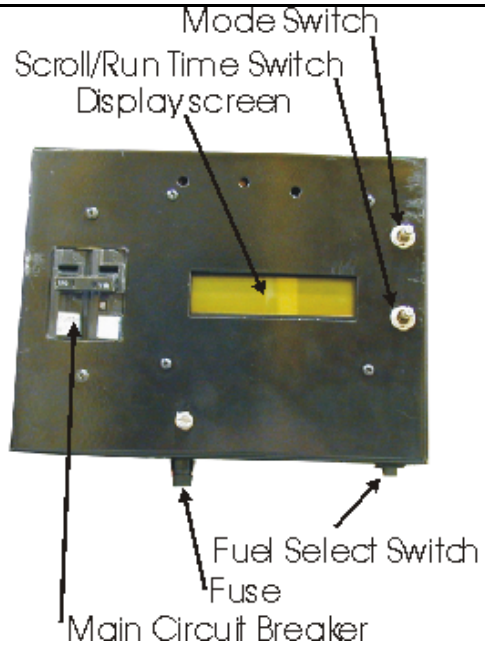

MODE SWITCH

The mode switch has three positions, AUTO, OFF and MANUAL. This will control the operation of the unit. With the mode switch in the OFF position, the generator will not operate. This position of the switch should be used when the generator is being serviced or for an emergency stop. In the MANUAL position, the engine cranks and starts when the switch is moved to this position. This switch position should be used during testing or for manual operation of the system. In the AUTO position, the unit will operate in an automatic mode when utility fails.

MAIN CIRCUIT BREAKER

This circuit breaker is provided to disconnect the generator output from a load in the event of a current overload. (110 amp 240 volt)

DISPLAY SCREEN

The LCD screen displays the status of the generator system at all times. With the MODE switch in the OFF position, the display flashes a NOT IN AUTO message and displays battery voltage. Placing the Mode switch in the AUTO position causes the display to read IN AUTO and display battery voltage. Placing the Mode switch in the MANUAL position causes the display to read IN MANUAL and display battery voltage. When the generator is running, the display scrolls through voltage and amperage for each phase, while continuously displaying output frequency and battery voltage. In the event of a generator fault, the specific fault is displayed.

SCROLL/RUN TIME SWITCH

This switch is used to scroll through the controller display screens or to display the accumulated unit run time.

SCROLL LOCK POSITION

Moving the switch to this position will freeze the VOLTS, PHASE, and AMPS display. Placing the switch back to the center position resumes scrolling.

RUN TIME POSITION

Moving the switch to the RUN TIME position will display the accumulated hours on the genset. Hours displayed are the total number of hours the set has run since new.

FAULT LIGHT

In the event of a generator fault, the fault light illuminates until the controller is manually reset. When the fault light is illuminated the specific fault is displayed on the controller display screen.

RELAY CIRCUIT FUSE

The crank and fuel solenoid circuits are protected via an inline 10A fuse. If the engine does not crank or shuts down without displaying a fault, check the fuse by turning the fuse holder cap clockwise to remove the fuse.

FUEL SELECT SWITCH

The Fuel Select Switch located on the bottom side of the control panel selects either Natural Gas or Liquid Propane Vapor. When the Fuel Select Switch is depressed away from the Control Panel face, that is the Natural Gas position. When the Fuel Select Switch is depressed toward the Control Panel face, this is the Liquid Propane Vapor position.

FAULT CONDITIONS

There are several features built into the Lighthouse system that will cause a shut down of the engine in the event of an abnormal operating condition. Under these conditions, the fault light illuminates and the specific fault is displayed until the controller is manually reset. LOW OIL PRESSURE. If the engine oil pressure falls below a preset level a switch activates and shuts the engine off. The fault light on the control panel will illuminate. Verify correct oil level, then reset controller by moving the Mode switch to OFF position. ENGINE OVERSPEED: If the generator frequency reaches 66HZ the controller signals the engine to shut down and the fault light will illuminate. Reset controller by moving Mode switch to OFF position, then back to desired operating mode. HIGH COOLANT TEMPERATURE SHUTDOWN: If the engine coolant exceeds 230°F the engine will automatically shut down. The fault light on the control panel will illuminate. Check coolant level and/or clear any cooling passage obstructions. Reset controller by moving Mode switch to OFF position, then back to desired operating Mode. OVERCRANK: If the generator completes five, 10 second on/10 second off crank cycles without starting an overcrank error occurs. The fault light on the control panel will illuminate. Correct the starting problem, and reset the controller by moving the Mode switch to the OFF position. Return the controller to the desired operation mode by moving the Mode switch to the appropriate position.

UNIT OPERATION TROUBLESHOOTING

SYMPTOM	POSSIBLE CAUSE	CORRECTIVE ACTION
Engine will not crank in Manual mode.	1. Defective battery.	Recharge or replace battery.
	2. Blown control panel fuse.	Replace fuse.
	2. Loose or dirty connections.	Check and clean D.C. connections.
	3. Defective crank relay.	Replace crank relay.
	4. Defective starter.	Replace starter.
	5. Defective control.	Replace control.
Engine will crank in Manual mode, but will not start.	1. No fuel.	Check fuel supply and manual operated fuel valves.
	2. Defective controller.	Check connections, replace.
	3. Defective fuel solenoid.	Replace fuel solenoid.
	4. Problem with engine ignition system.	Test and replace.
Engine runs, but no A.C. output from the generator.	1. Main circuit breaker tripped.	Reset breaker.
	2. Defective generator.	Test and replace defective part.
	3. Improper output connections.	Reconnect properly.
Fault light on, engine will not start.	1. Low oil pressure.	Check oil level.
	2. High coolant temperature.	Allow unit to cool.
	3. Overcrank error.	Check fuel and ignition systems. Check battery and connections.
Engine starts, but shuts down immediately.	1. Low oil pressure.	Check oil level.
	2. Low fuel pressure.	Check fuel supply, pipe size.
	3. Defective controller.	Replace controller.
Battery will not stay charged.	1. Defective battery.	Replace battery.
	2. Defective connections.	Clean and tighten connections.
	3. Defective alternator.	Replace alternator
	4. Defective battery charger.	Replace battery charger.
Engine will not run at full speed, or runs rough.	1. Insufficient fuel volume.	Check fuel line. Replace fuel regulator. Check regulator vent for obstructions.
	2. Engine electrical problem.	Replace spark plugs. Check ignition wiring.
	3. Engine configured for wrong fuel.	Check fuel select switch and regulator orientation.
	4. Generator over loaded.	Reduce load.

Controller SHUT DOWN Messages
HIGH ENGINE TEMPERATURE

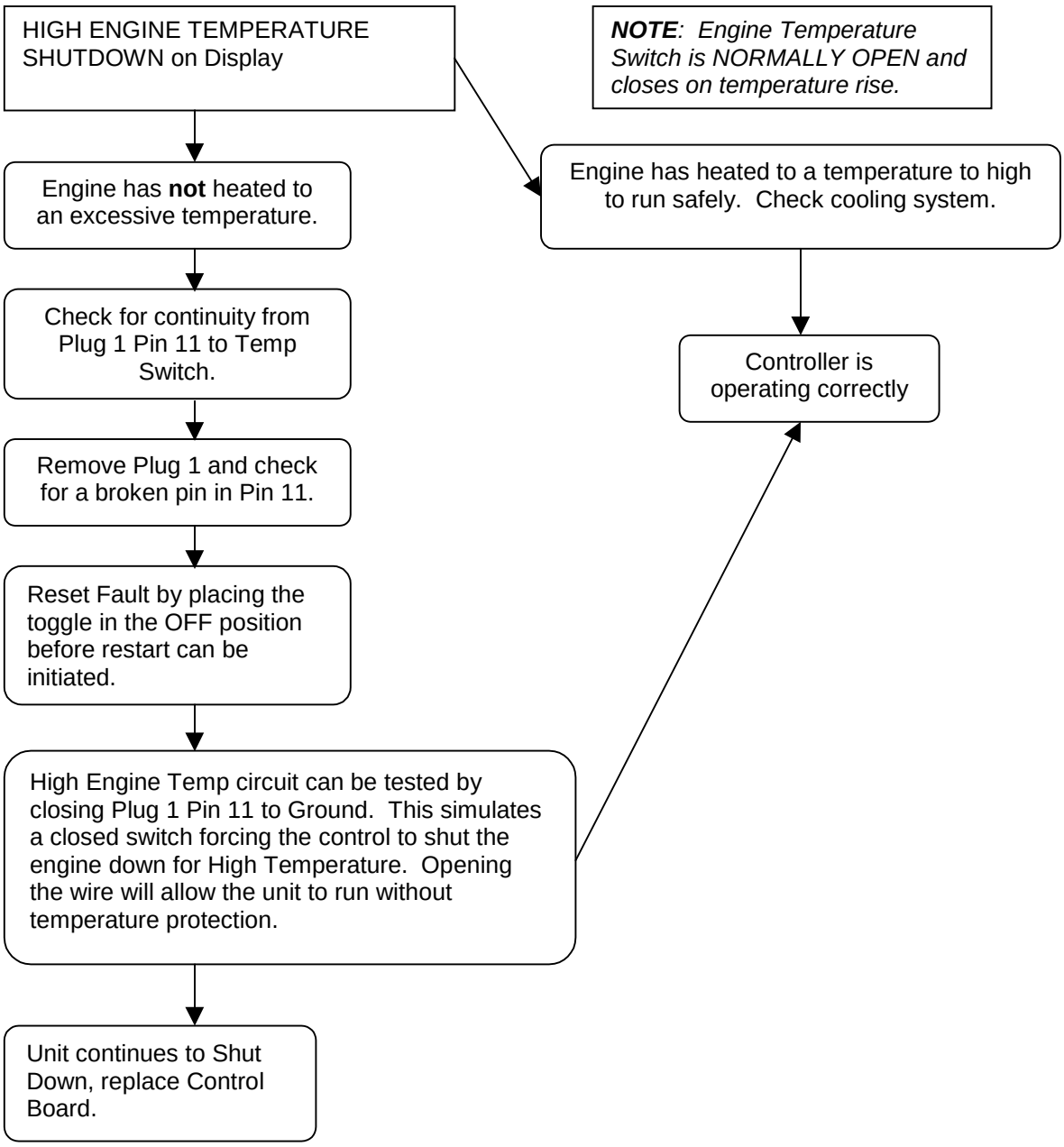

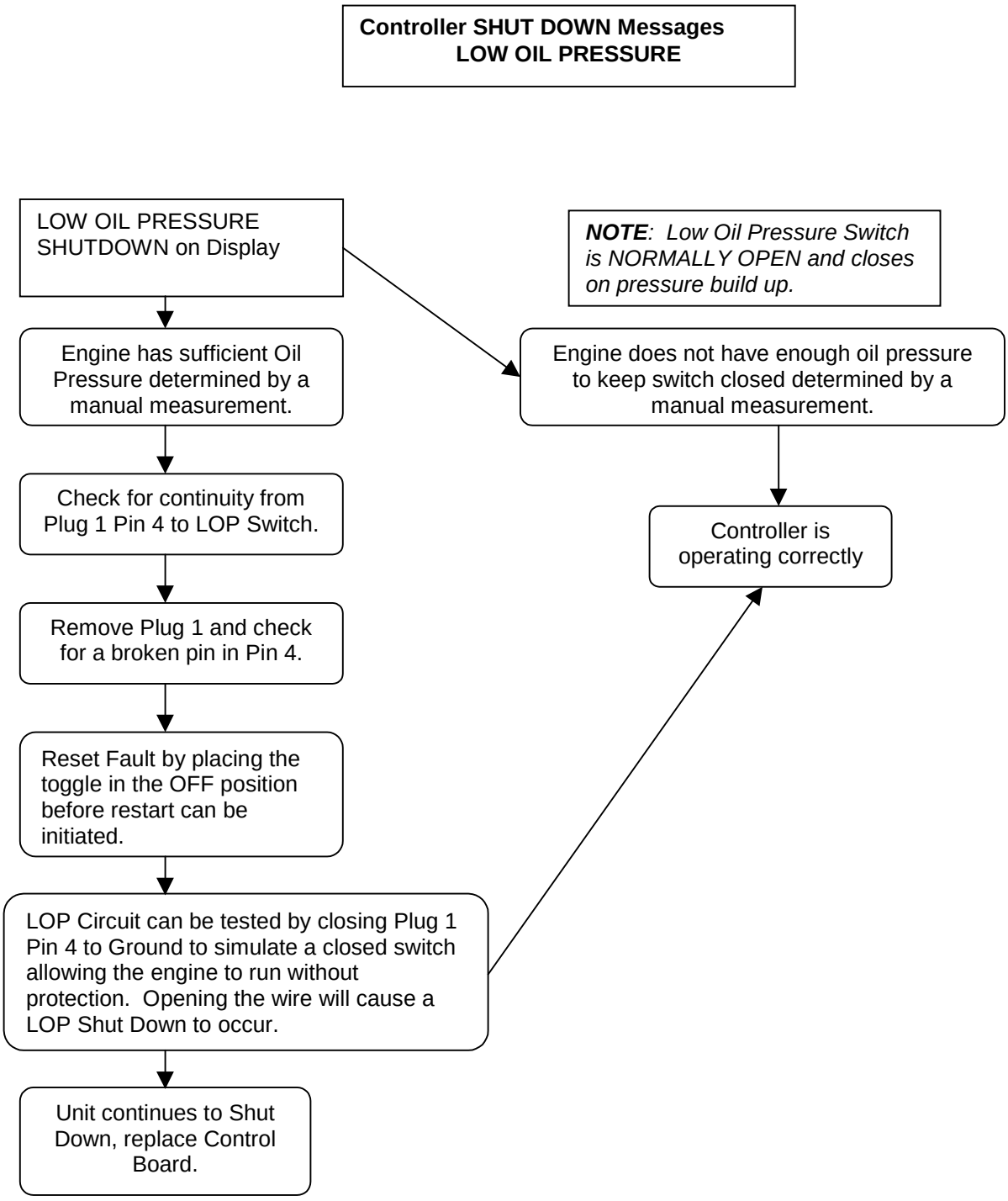
Controller SHUT DOWN Messages
LOW OIL PRESSURE
LOW OIL PRESSURE SHUTDOWN on Display
NOTE: Low Oil Pressure Switch is NORMALLY OPEN and closes on pressure build up.
Engine has sufficient Oil Pressure determined by a manual measurement.
Engine does not have enough oil pressure to keep switch closed determined by a manual measurement.
Check for continuity from Plug 1 Pin 4 to LOP Switch.
Controller is operating correctly
Remove Plug 1 and check for a broken pin in Pin 4.
Reset Fault by placing the toggle in the OFF position before restart can be initiated.
LOP Circuit can be tested by closing Plug 1 Pin 4 to Ground to simulate a closed switch allowing the engine to run without protection. Opening the wire will cause a LOP Shut Down to occur.
Unit continues to Shut Down, replace Control Board.

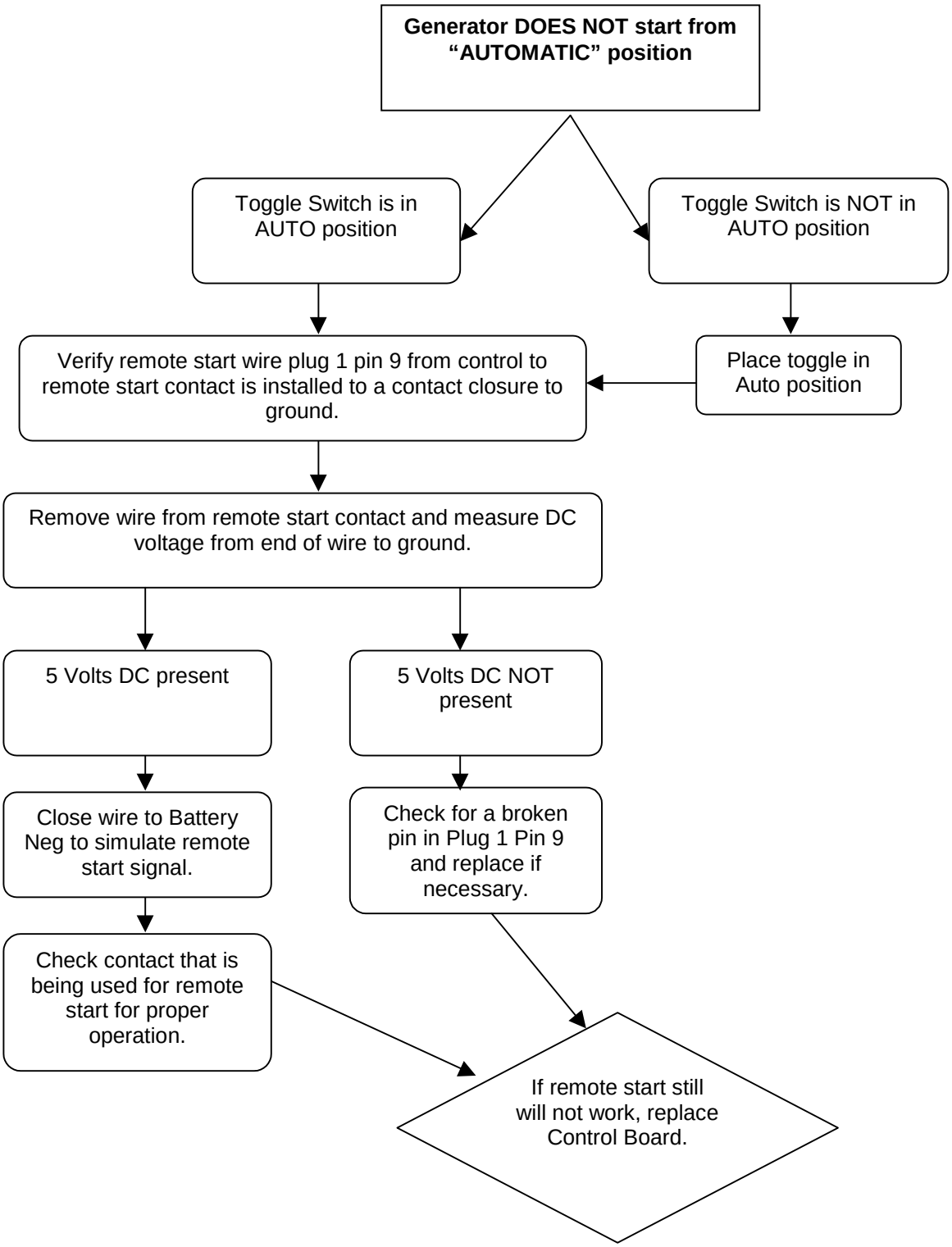
Generator DOES NOT start from "AUTOMATIC" position
Toggle Switch is in AUTO position
Toggle Switch is NOT in AUTO position
Verify remote start wire plug 1 pin 9 from control to remote start contact is installed to a contact closure to ground.
Place toggle in Auto position
Remove wire from remote start contact and measure DC voltage from end of wire to ground.
5 Volts DC present
5 Volts DC NOT present
Close wire to Battery Neg to simulate remote start signal.
Check for a broken pin in Plug 1 Pin 9 and replace if necessary.
Check contact that is being used for remote start for proper operation.
If remote start still will not work, replace Control Board.

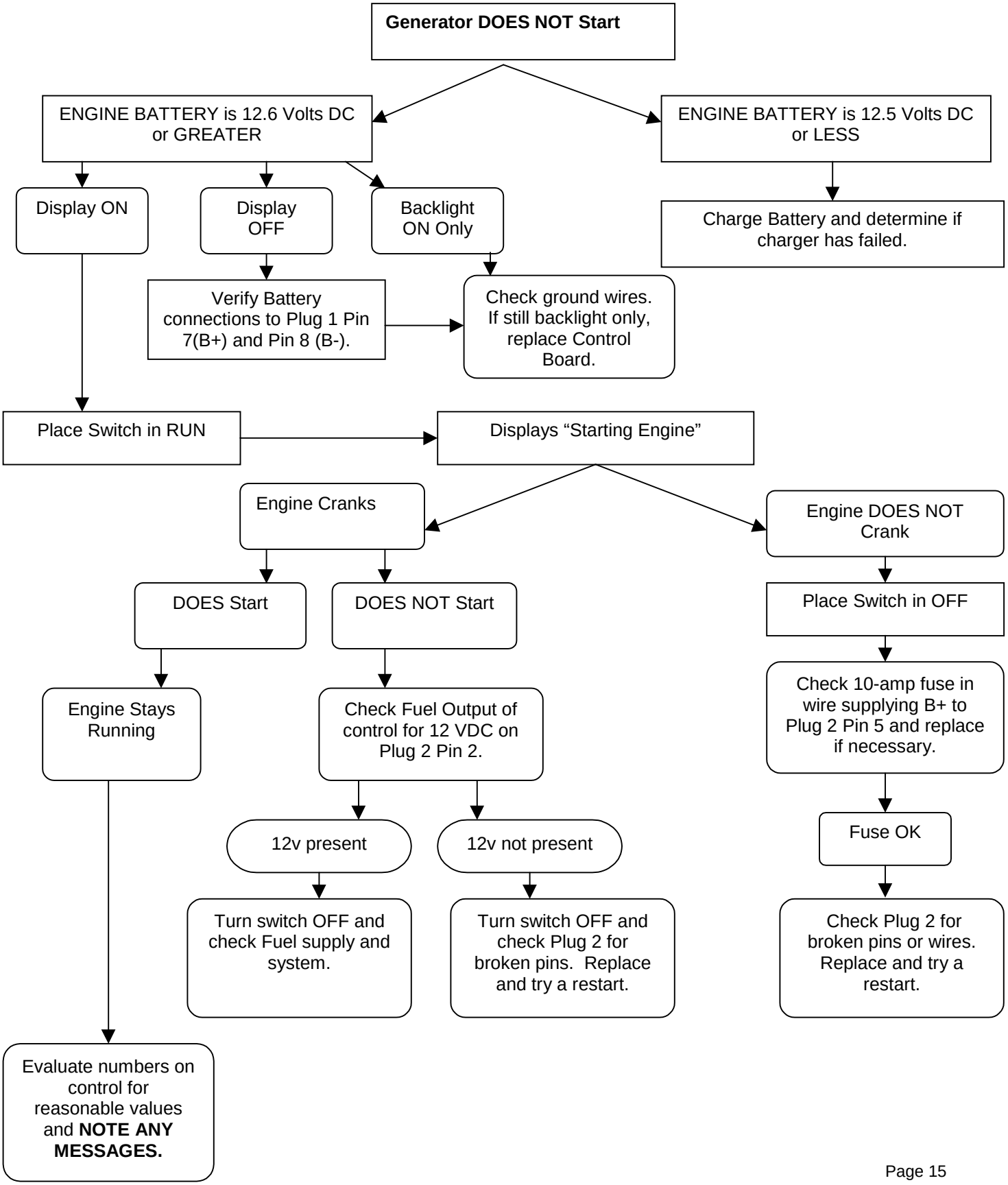
Generator DOES NOT Start
ENGINE BATTERY is 12.6 Volts DC or GREATER
ENGINE BATTERY is 12.5 Volts DC or LESS
Display ON
Display OFF
Backlight ON Only
Charge Battery and determine if charger has failed.
Verify Battery connections to Plug 1 Pin 7(B+) and Pin 8 (B-).
Check ground wires. If still backlight only, replace Control Board.
Place Switch in RUN
Displays “Starting Engine”
Engine Cranks
Engine DOES NOT Crank
DOES Start
DOES NOT Start
Place Switch in OFF
Engine Stays Running
Check Fuel Output of control for 12 VDC on Plug 2 Pin 2.
Check 10-amp fuse in wire supplying B+ to Plug 2 Pin 5 and replace if necessary.
12v present
12v not present
Fuse OK
Turn switch OFF and check Fuel supply and system.
Turn switch OFF and check Plug 2 for broken pins. Replace and try a restart.
Check Plug 2 for broken pins or wires. Replace and try a restart.
Evaluate numbers on control for reasonable values and NOTE ANY MESSAGES.

Controller SHUT DOWN Messages
OVERCRANK

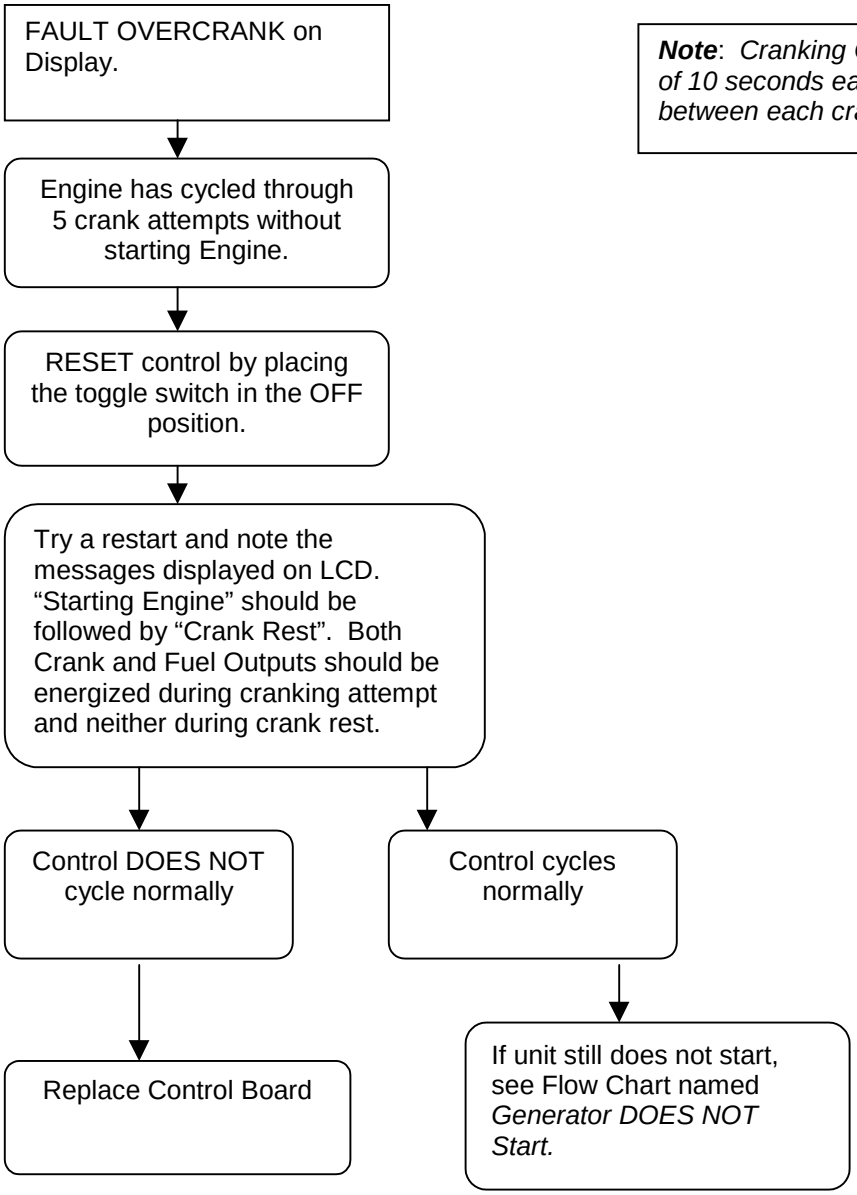

Note: *Cranking Cycle is 5 crank attempts of 10 seconds each with a 10-second rest between each crank cycle.*

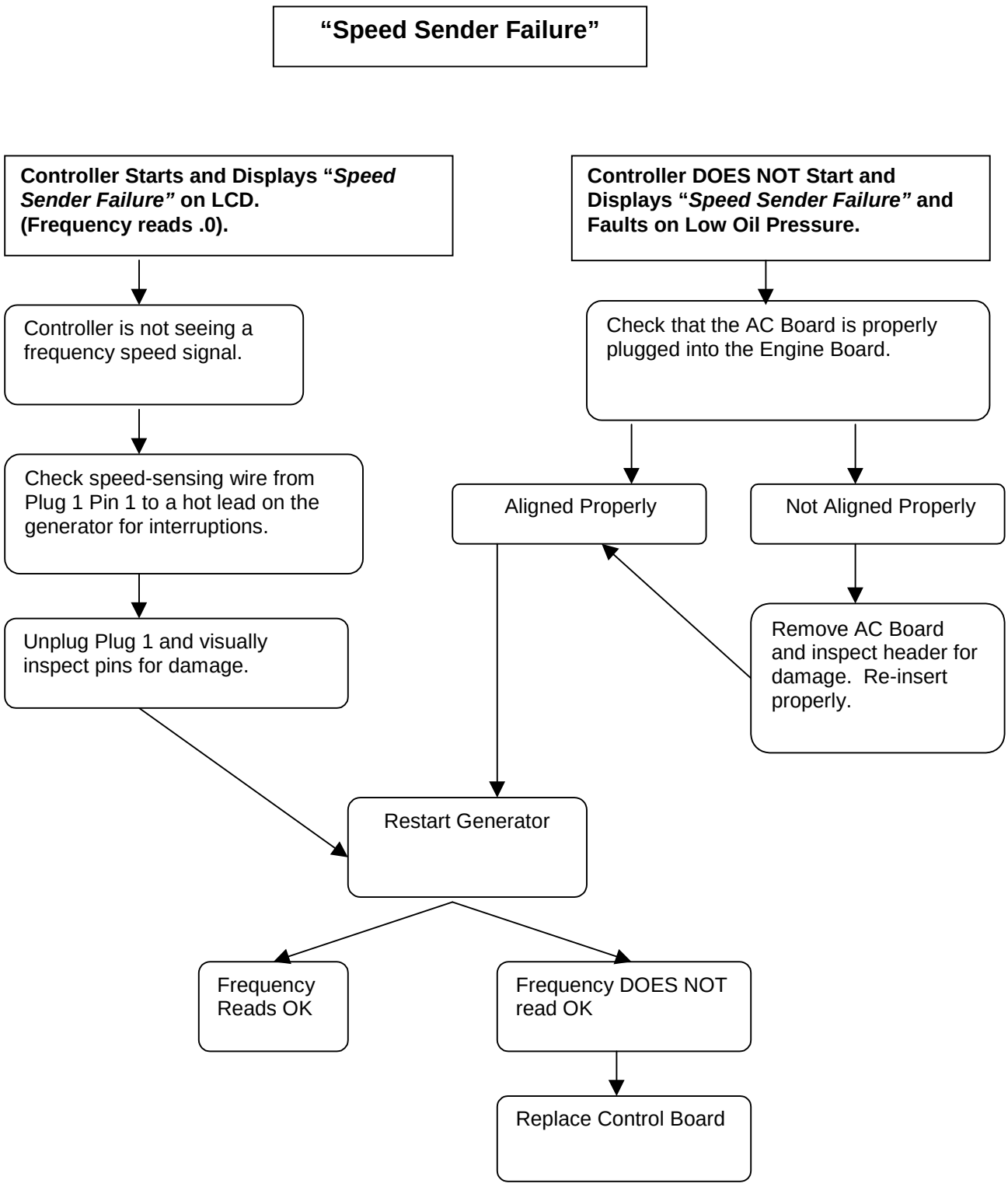
"Speed Sender Failure"
Controller Starts and Displays "Speed Sender Failure" on LCD. (Frequency reads .0).
Controller DOES NOT Start and Displays "Speed Sender Failure" and Faults on Low Oil Pressure.
Controller is not seeing a frequency speed signal.
Check that the AC Board is properly plugged into the Engine Board.
Check speed-sensing wire from Plug 1 Pin 1 to a hot lead on the generator for interruptions.
Aligned Properly
Not Aligned Properly
Unplug Plug 1 and visually inspect pins for damage.
Remove AC Board and inspect header for damage. Re-insert properly.
Restart Generator
Frequency Reads OK
Frequency DOES NOT read OK
Replace Control Board

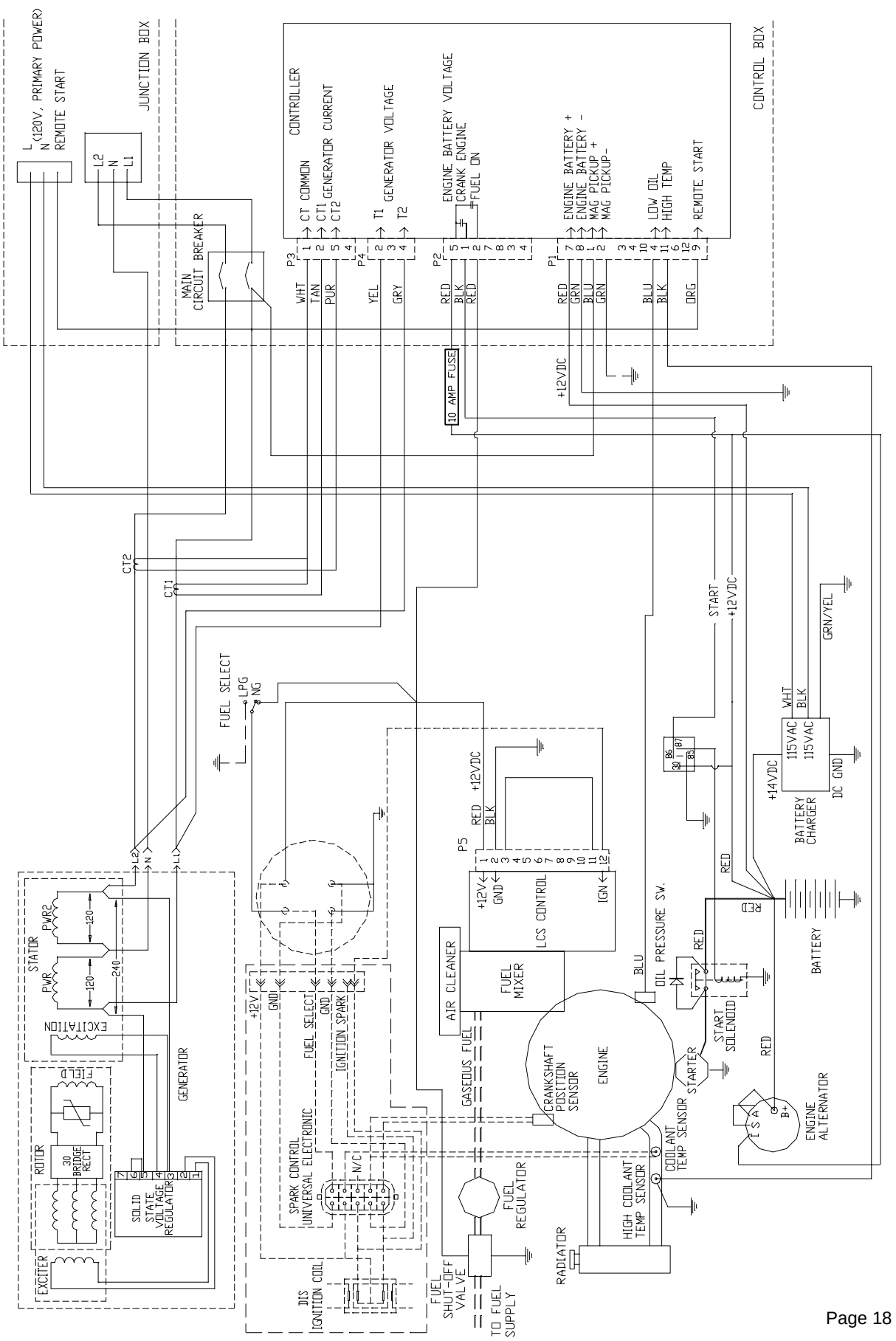
L
N (120V, PRIMARY POWER)
REMOTE START
JUNCTION BOX
L2
N
L1
MAIN CIRCUIT BREAKER
CONTROLLER
CT COMMON
CT1 GENERATOR CURRENT
CT2
T1 GENERATOR VOLTAGE
T2
ENGINE BATTERY VOLTAGE
CRANK ENGINE
FUEL ON
ENGINE BATTERY +
ENGINE BATTERY -
MAG PICKUP +
MAG PICKUP-
LOW OIL
HIGH TEMP
REMOTE START
CONTROL BOX
P3
P4
P2
P1
WHT
TAN
PUR
YEL
GRY
RED
BLK
RED
RED
GRN
BLU
GRN
BLU
BLK
ORG
10 AMP FUSE
+12VDC
CT2
CT1
FUEL SELECT
LPG
NG
START
+12VDC
GRN/YEL
WHT
BLK
115VAC
115VAC
DC GND
+14VDC
BATTERY CHARGER
P5
RED
BLK
+12V
GND
LCS CONTROL
IGN
AIR CLEANER
FUEL MIXER
OIL PRESSURE SW.
BLU
RED
BATTERY
START SOLENOID
STARTER
CRANKSHAFT POSITION SENSOR
ENGINE
GASEOUS FUEL
COOLANT TEMP SENSOR
ENGINE ALTERNATOR
B+
STATOR
PWR2
PWR
120
120
240
EXCITATION
FIELD
ROTOR
30 BRIDGE RECT
SOLID STATE VOLTAGE REGULATOR
EXCITER
GENERATOR
+12V
GND
FUEL SELECT
GND
IGNITION SPARK
SPARK CONTROL UNIVERSAL ELECTRONIC
N/C
DIS IGNITION COIL
FUEL REGULATOR
FUEL SHUT-OFF VALVE
TO FUEL SUPPLY
HIGH COOLANT TEMP SENSOR
RADIATOR

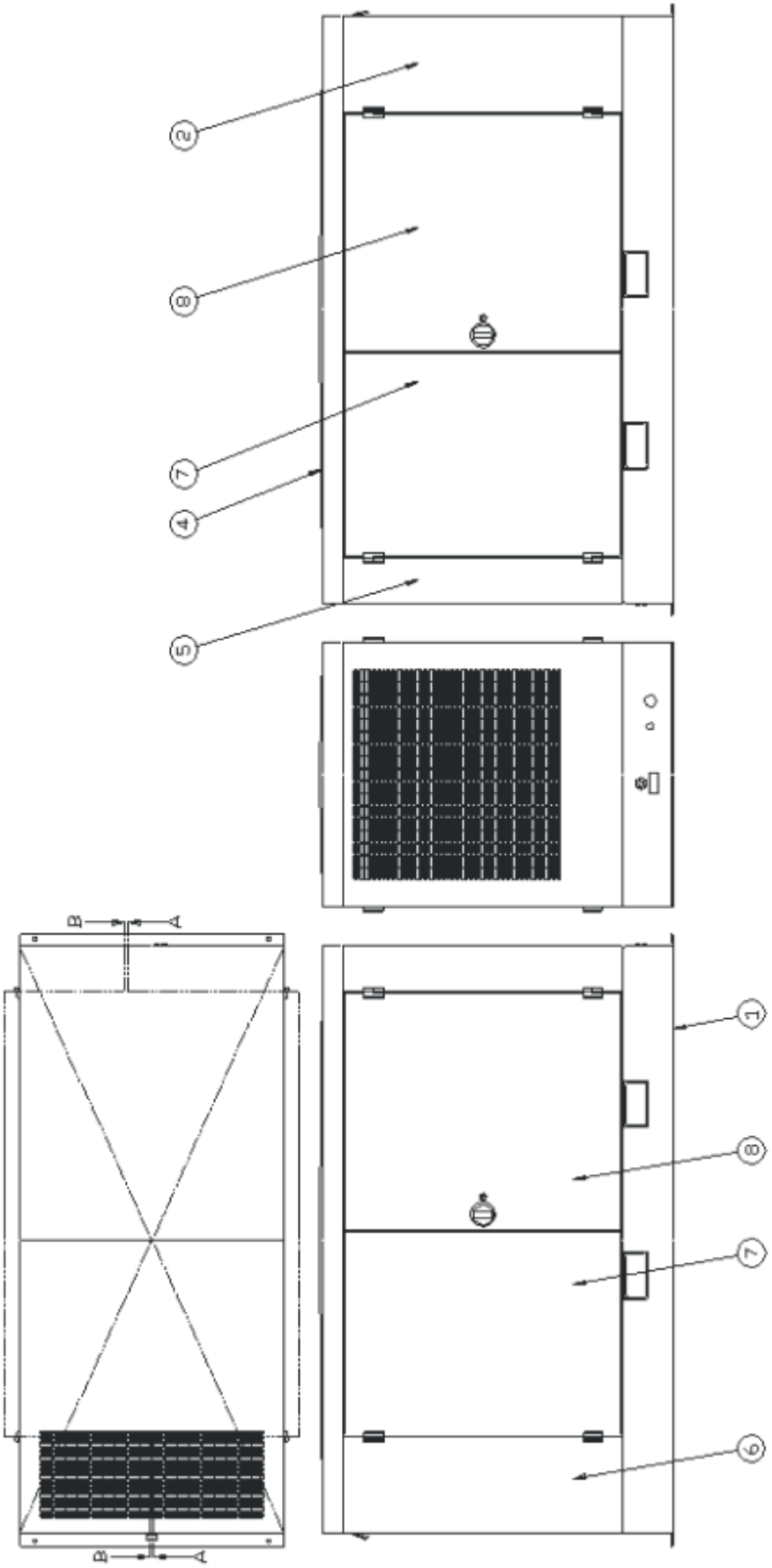
2
8
7
4
5
B
A
B
A
1
8
7
6

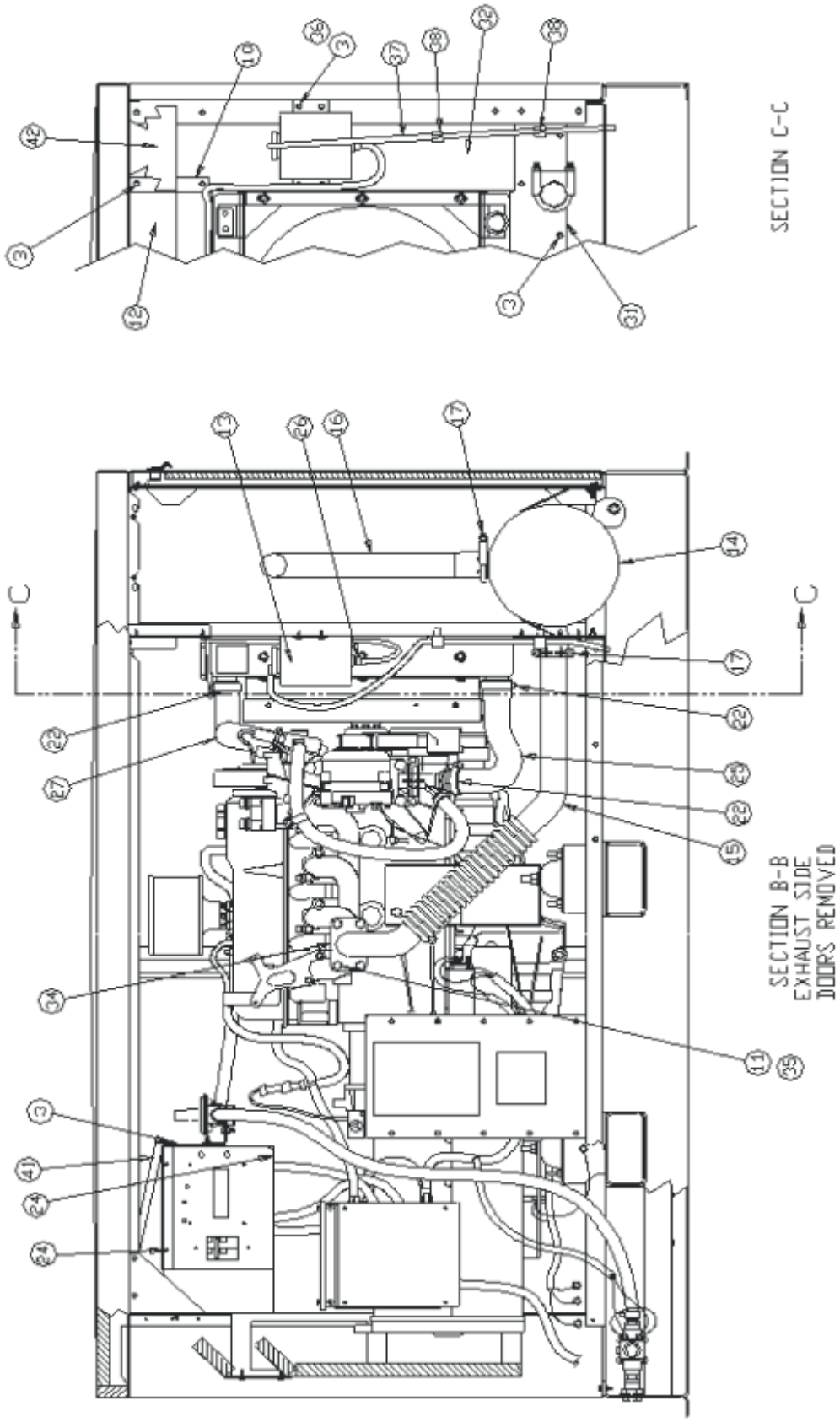
SECTION C-C
SECTION B-B
EXHAUST SIDE
DOORS REMOVED

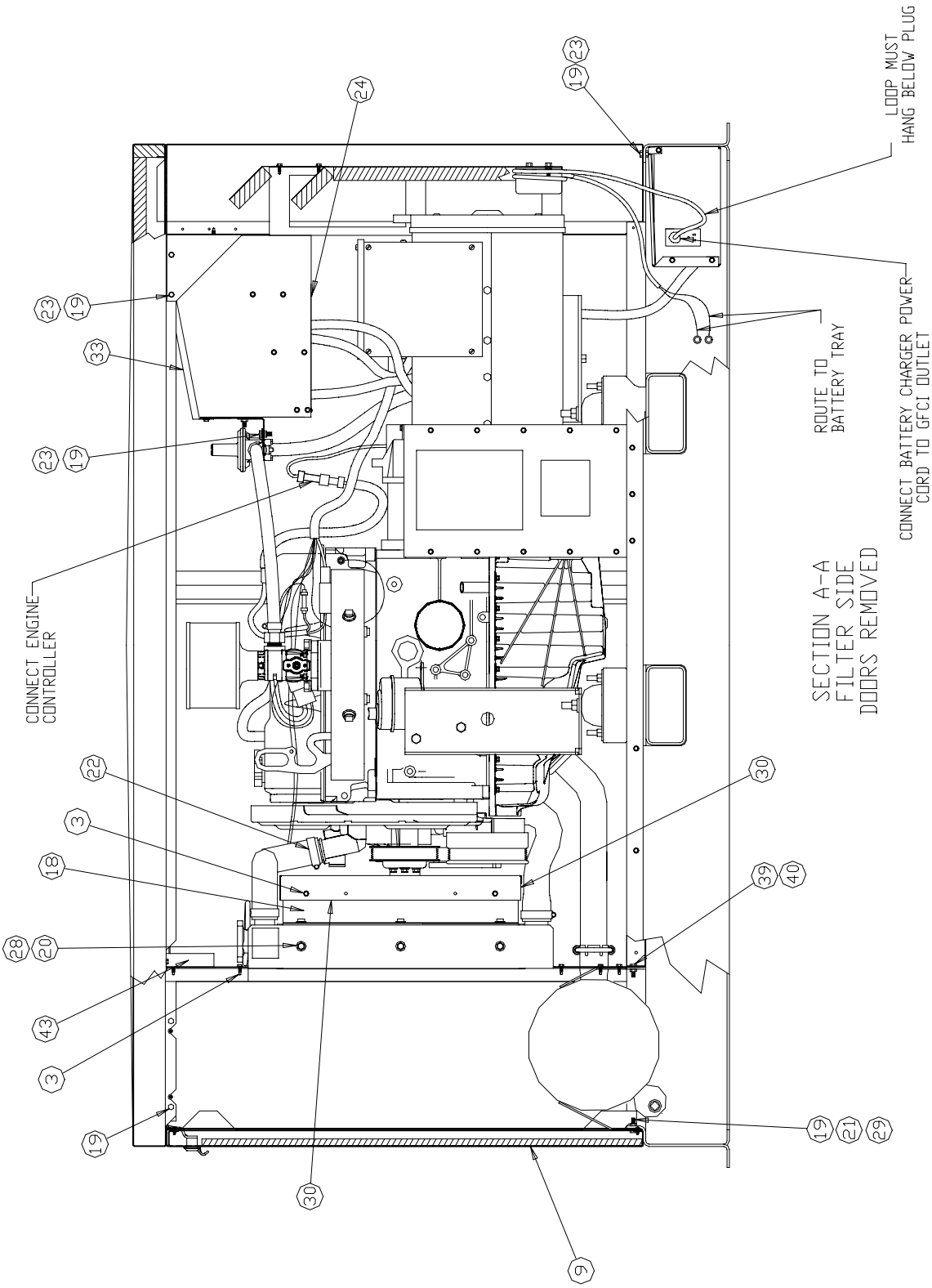
LOOP MUST HANG BELOW PLUG
CONNECT BATTERY CHARGER POWER CORD TO GFCI OUTLET
ROUTE TO BATTERY TRAY
CONNECT ENGINE CONTROLLER
SECTION A-A
FILTER SIDE
DOORS REMOVED
24
19
23
33
22
3
18
28
20
43
30
39
40
21
29
9

25kW LIGHTHOUSE SERVICE MANUAL
PART LIST FOR PAGES 19 - 21

ITEM	P/N	DESCRIPTION	TORQUE	QTY.
1	75241	ENG GEN FRAME ASSY. 25 kW		1
2	75242	RAD BLKHD EXH SIDE ASSY. 25kW		1
3	NASP	SCREW HWH #10-14 X .63 AT 3 MILL PT	10-20 IN LB	28
4	75243	LID ASSY. 25kW		1
5	75244	GEN END PANEL ASSY.		1
6	75245	RAD BLKHD FILTER SIDE ASSY. 25kW		1
7	75246	DOOR INNER ASSY. 25kW		2
8	75247	DOOR OUTER ASSY. 25kW		2
9	75248	ENG END PANEL ASSY. 25kW		1
10	75249	RAD BLKHD TOP 25kW		1
11	75250	BOLT HH M10-1.5 X 25MM GR A CL 8.8	10-20 IN LB	4
12	75251	INSL RAD BLKHD TOP 25kW		1
13	75252	BOTTLE ASSY. RADIATOR OVERFLOW		1
14	75253	MUFFLER 25kW		1
15	75254	EXHAUST MANIFOLD 25kW		1
16	75255	TAILPIPE 25kW		1
17	75256	CLAMP SADDLE 2.125”	10-20 IN LB	2
18	75257	RADIATOR 25kW		1
19	NASP	BOLT, HH 1/4-20 X .75 GR5 ZP	10-20 IN LB	19
20	NASP	BOLT, HH 5/16-18 X .50	10-20 IN LB	6
21	NASP	WASHER LOCK 1/4 ZP		2
22	75258	CLAMP HOSE WORM .91-2.75	8-12 IN LB	4
23	NASP	NUT, 1/4-20 NYLOC ZP		9
24	NASP	SCREW HH #10 X .50 AB BLK WSHRLESS	10-20 IN LB	4
25	75259	RAD HOSE LOWER		1
26	75260	CLAMP .41 ID UM5073		1
27	75261	RAD HOSE UPPER 25kW		1
28	NASP	WASHER LOCK 5/16 ZP		6
29	NASP	NUT HEX 1/4-20 ZP		2
30	75262	RAD FAN SHIELD 25kW		1
31	75263	RAD BLKHD LOWER 25kW		1
32	75264	RAD BLKHD EXH SIDE B 25kW		1
33	75265	BRACE GEN BAFL FILTER SIDE 25kW		1
34	75266	EXHAUST GASKET 25kW		1
35	NASP	WASHER LOCK 7/16 ZP		4
36	NASP	WASHER FLAT 1/4”		4
37	75267	HOSE WATER .25 ID		2.5 Ft.
38	75268	CLIP (OVERFLOW HOSE OUT)		2
39	NASP	BOLT HH 5/16-18 X 1.00 GR5 ZP		1
40	NASP	WASHER LOCK 5/16 ZP		1
41	75269	BRACE GEN BAFL EXH SIDE 25kW		1
42	75270	INSL 3.6” x 7” POLY-ETHER PAF-100-BUA3		1
43	75271	INSL 3.2” X 3.6” POLY-ETHER PAF-100-BUA3		1

NASP: Not available as service parts. These are standard parts available at your local hardware or parts stores.

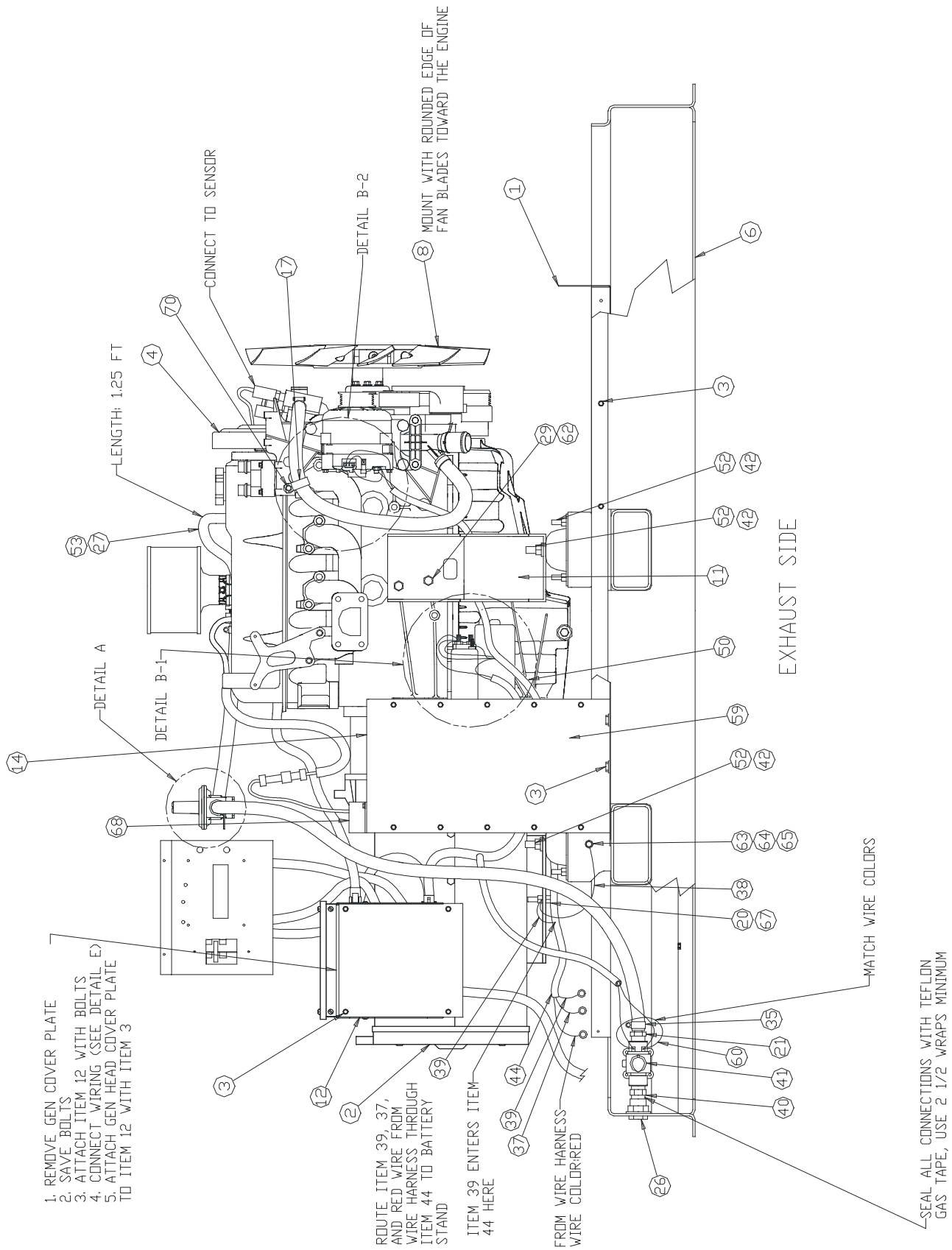
1. REMOVE GEN COVER PLATE
2. SAVE BOLTS
3. ATTACH ITEM 12 WITH BOLTS
4. CONNECT WIRING (SEE DETAIL E)
5. ATTACH GEN HEAD COVER PLATE TO ITEM 12 WITH ITEM 3
LENGTH= 1.25 FT
CONNECT TO SENSOR
DETAIL B-2
MOUNT WITH ROUNDED EDGE OF FAN BLADES TOWARD THE ENGINE
DETAIL A
DETAIL B-1
EXHAUST SIDE
MATCH WIRE COLORS
ROUTE ITEM 39, 37, AND RED WIRE FROM WIRE HARNESS THROUGH ITEM 44 TO BATTERY STAND
ITEM 39 ENTERS ITEM 44 HERE
FROM WIRE HARNESS WIRE COLOR=RED
SEAL ALL CONNECTIONS WITH TEFLON GAS TAPE, USE 2 1/2 WRAPS MINIMUM

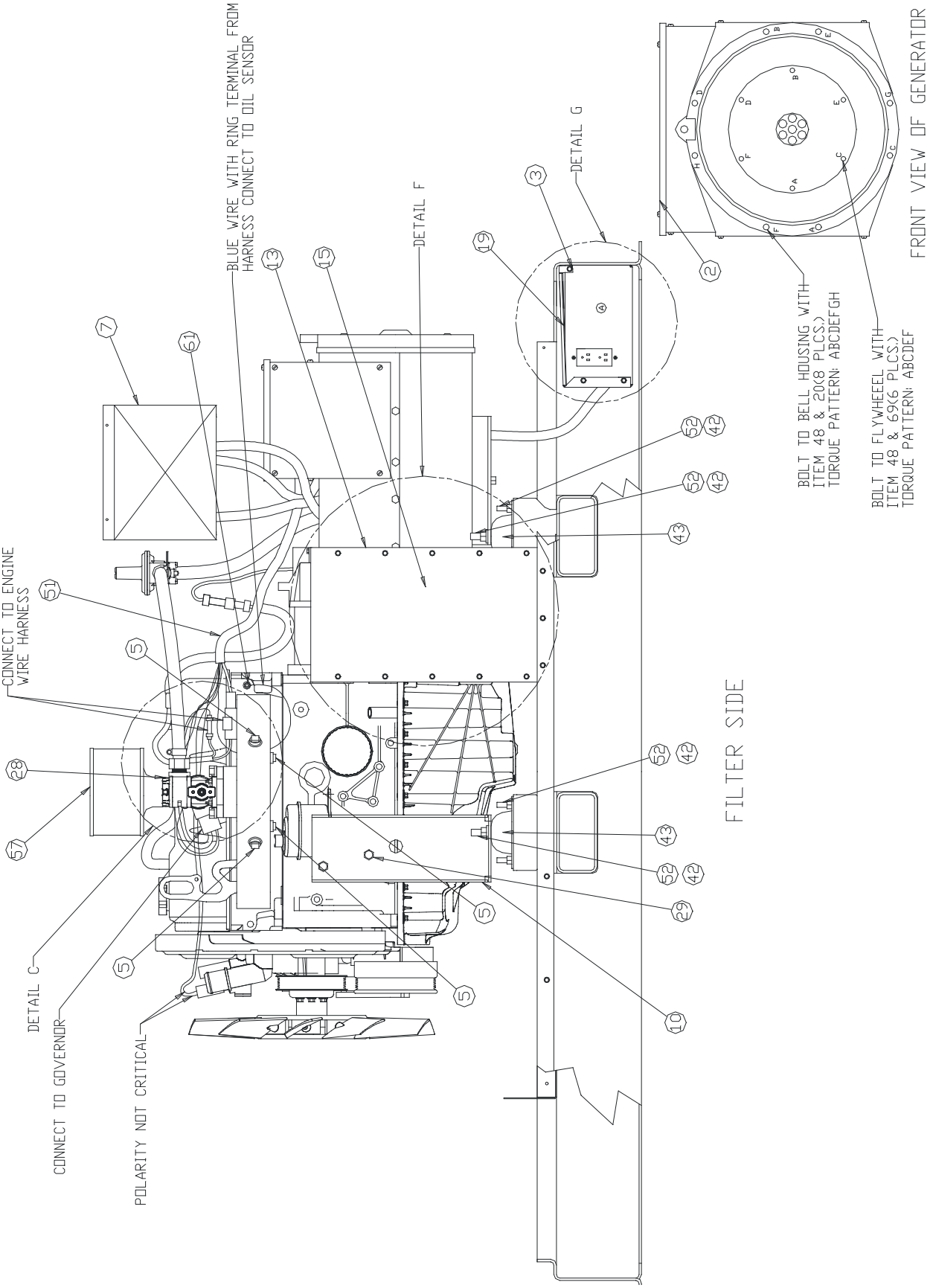
FRONT VIEW OF GENERATOR
BOLT TO FLYWHEEEL WITH
ITEM 48 & 6966 PLCS.)
TORQUE PATTERN: ABCDEF
BOLT TO BELL HOUSING WITH
ITEM 48 & 2068 PLCS.)
TORQUE PATTERN: ABCDEFGH
BLUE WIRE WITH RING TERMINAL FROM
HARNESS CONNECT TO OIL SENSOR
DETAIL F
DETAIL G
CONNECT TO ENGINE
WIRE HARNESS
DETAIL C
CONNECT TO GOVERNOR
POLARITY NOT CRITICAL
FILTER SIDE

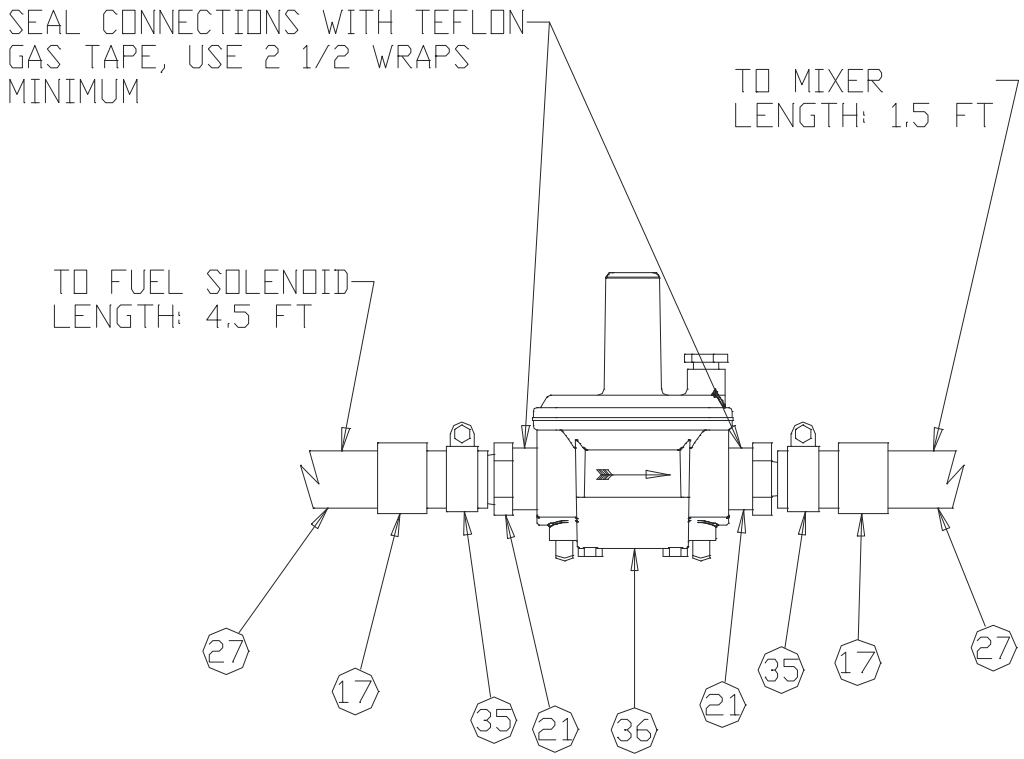

DETAIL A
(ROTATED 90°)

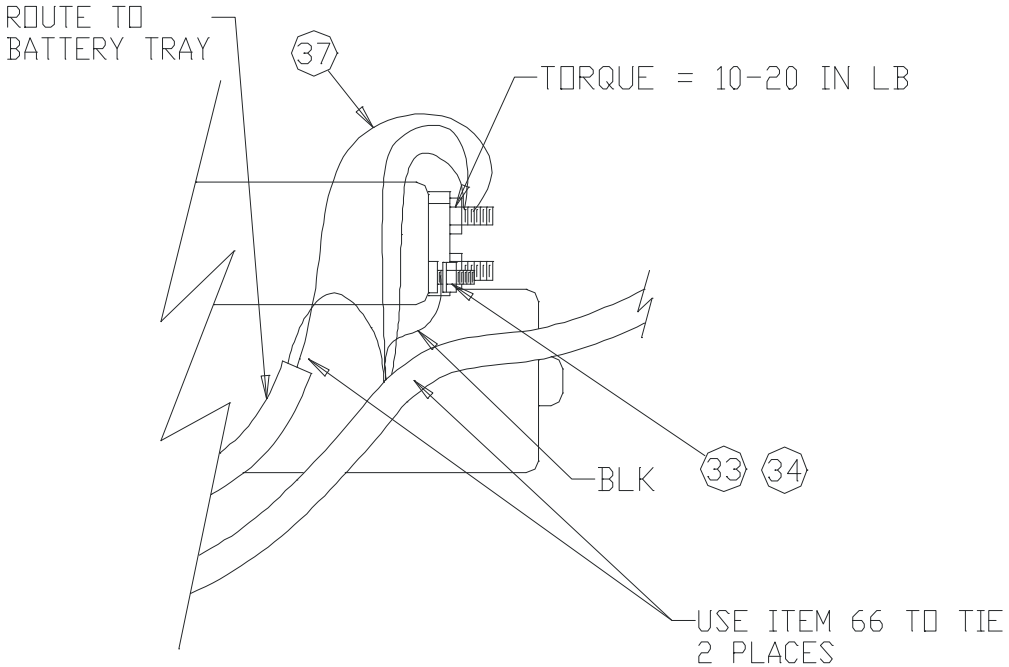

DETAIL B-1

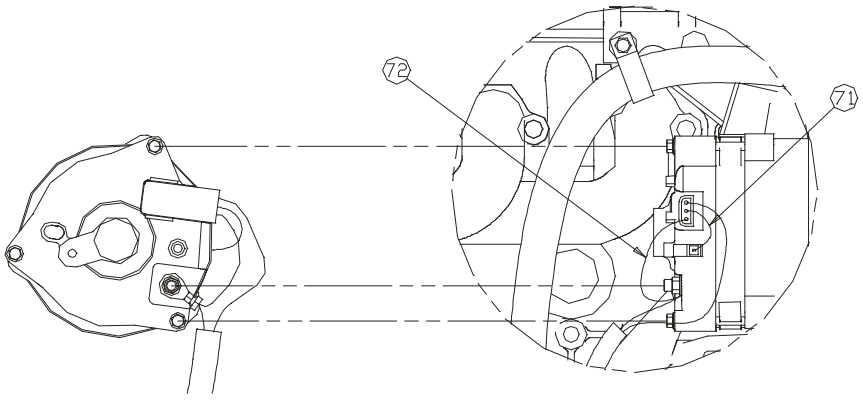

BACK VIEW SIDE VIEW

DETAIL B-2

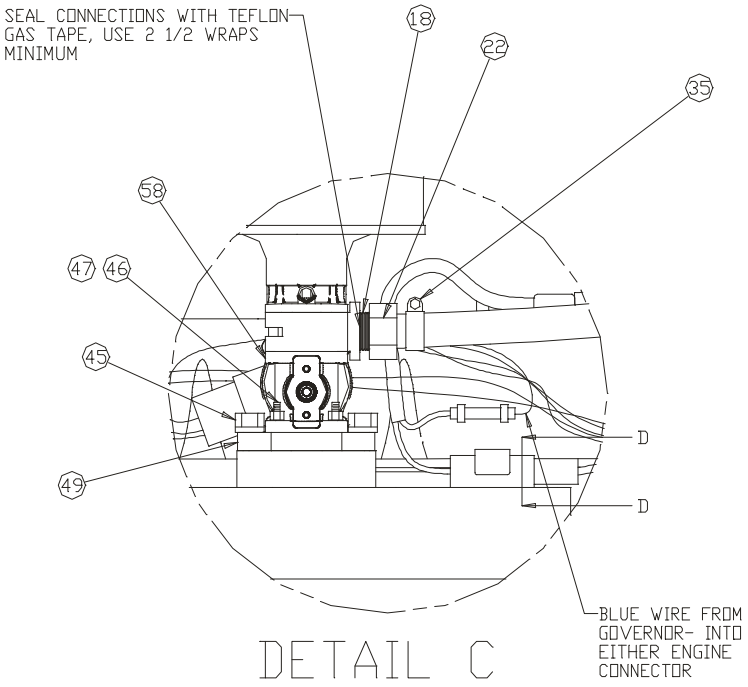

DETAIL C

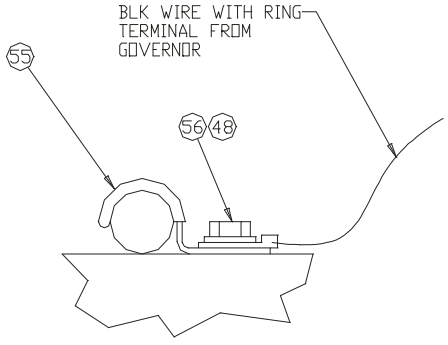

SECTION D-D

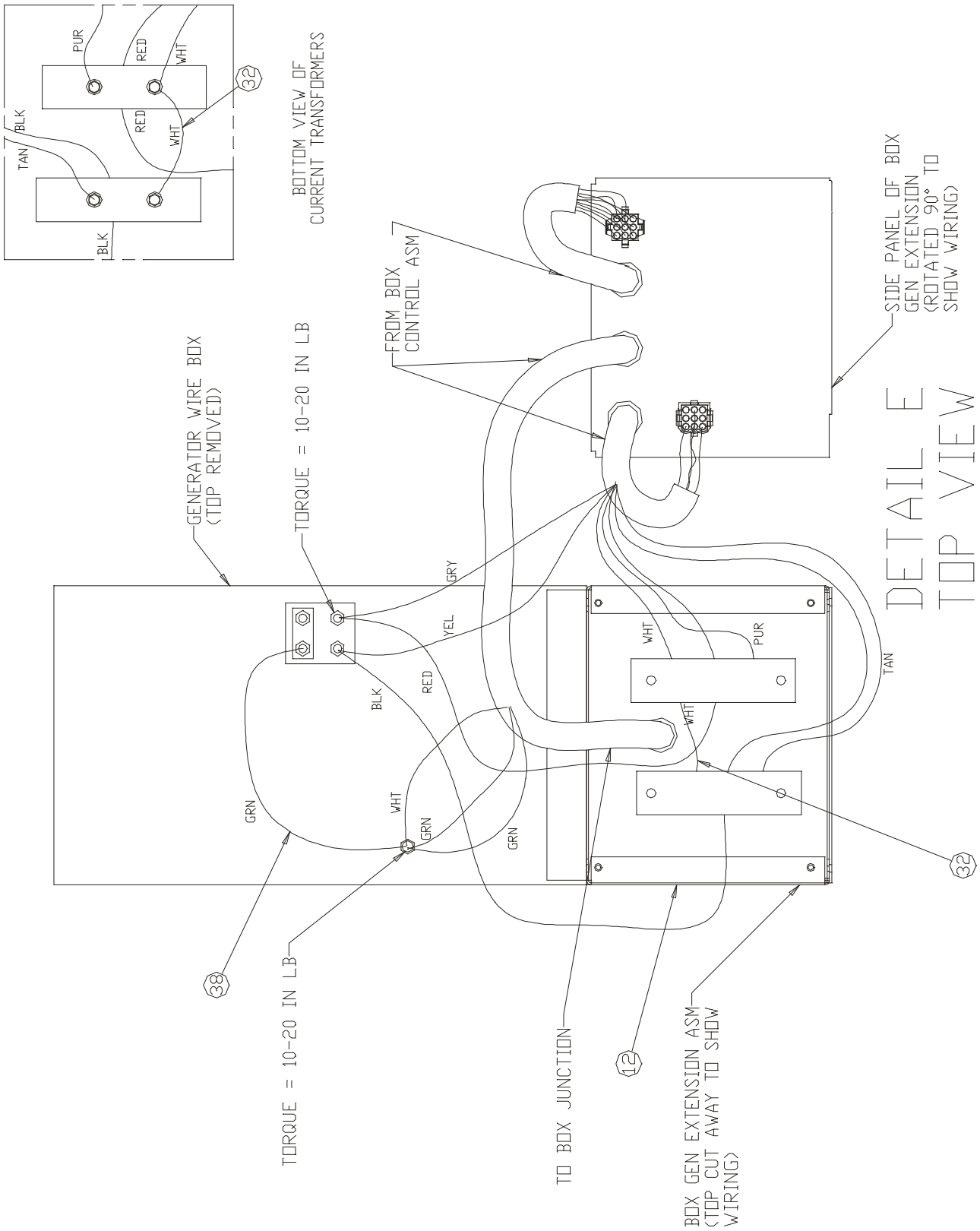
PUR
RED
WHT
BLK
RED
WHT
TAN
BLK
32
BOTTOM VIEW OF
CURRENT TRANSFORMERS
FROM BOX
CONTROL ASM
SIDE PANEL OF BOX
GEN EXTENSION
(ROTATED 90° TO
SHOW WIRING)
GENERATOR WIRE BOX
(TOP REMOVED)
TORQUE = 10-20 IN LB
GRY
YEL
BLK
RED
WHT
PUR
TAN
WHT
GRN
WHT
GRN
GRN
DETAIL E
TOP VIEW
32
38
TORQUE = 10-20 IN LB
TO BOX JUNCTION
12
BOX GEN EXTENSION ASM
(TOP CUT AWAY TO SHOW
WIRING)

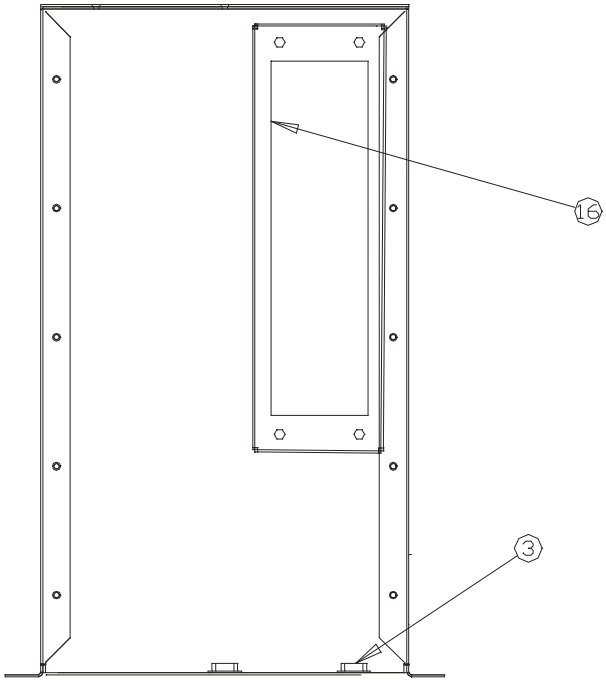

DETAIL F
ITEM 15 REMOVED
(SAME FOR EXHAUST SIDE)

JUNCTION BOX
TOP VIEW
(LID REMOVED)

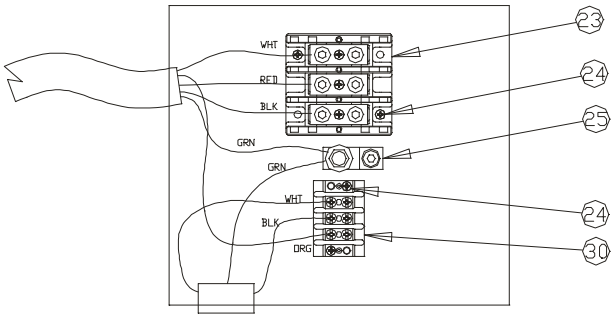

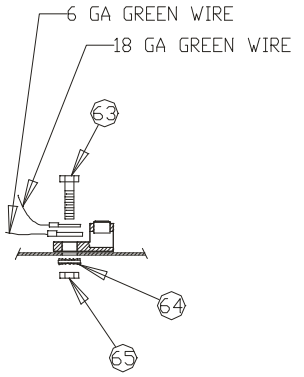

CROSS SECTION
OF GROUND LUG

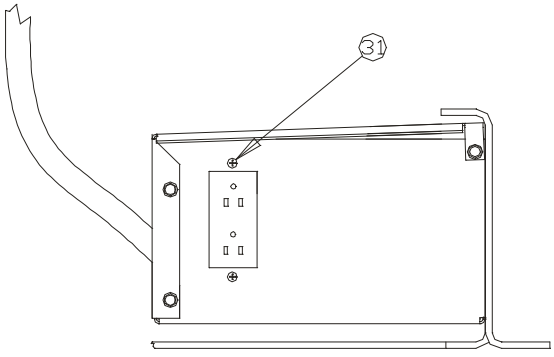

DETAIL G

25kW LIGHTHOUSE SERVICE MANUAL
PARTS LIST FOR PAGES 23-28

ITEM	P/N	DESCRIPTION	TORQUE	QTY.
1	75272	ENGINE TRAY 25kW		1
2	75273	HEAD GEN NEWAGE 25kW 4P 120/240 4L		1
3	NASP	SCREW HWH #10-14 X .63 AT 3 MILL PT	10-20 IN LB	57
4	75274	ENGINE FORD LRG425 SAE 4/8		1
5	75275	PLUG 3/8 NPT		4
6	75276	FRAME ASSY. 25kW		1
7	75277	PNL WIRED CONTROLLER 25kW		1
8	75278	FAN 25kW		1
9	NASP	WEATHERSTRIP 25kW GEN OUTLET		4 Ft.
10	75279	ENG MNT EXH 25kW		1
11	75280	ENG MNT FILTER 25kW		1
12	75281	BOX GEN EXTENSION ASSY.		1
13	75282	EXH PLENIUM EXH SIDE 25kW		1
14	75283	EXH PLENIUM FILTER SIDE 25kW		1
15	75284	EXH PLENIUM COVER FILTER SIDE 25kW		1
16	75285	EXH PLENIUM PLATE 25kW		2
17	NASP	P-CLAMP 1”		3
18	75286	MIXER INLET LCS50		1
19	75287	BOX JUNCTION COVER 25kW		1
20	NASP	BOLT HH 3/8-16 X 1.25 GR5 ZP		9
21	75288	FITTING 3/4 NPT X 1/2” BARB		3
22	75289	FITTING 1/2 NPT X 1/2” BARB		1
23	75290	TERMINAL BLOCK 2 ROW 175A 3 POLE		1
24	NASP	SCREW, CRRNDH #08-32 X .50 TYPE F	10-20 IN LB	4
25	75291	LUG GROUND 2/0-14 AWG		1
26	75292	BULKHEAD FITTING 1/2 X 1/2 NPT		1
27	NASP	HOSE VAPOR .51 ID LOW PRESS		6.75 Ft.
28	NASP	CLAMP HOSE WORM .91-2.75	8-10 IN LB	1
29	NASP	BOLT HH M10-1.5 X 25MM GR A CL 8.8	20-30 IN LB	4
30	75293	ASSY. HARNESS GFCI 25kW		1
31	NASP	SCREW CRPH #06-32 X .5 TH ZP	10-20 IN LB	2
32	75294	ASSY. WIRE WHT 18 GA 8.00 RING/RING		1
33	NASP	NUT HEX M6 X 1.0 ZP	10-20 IN LB	1
34	NASP	WASHER LOCK 1/4 ZP		1
35	NASP	CLAMP HOSE WORM .5-1.25	8-10 IN LB	1
36	75295	REGULATOR LPG/NG 450CFH 3/4 X 3/4		1

NASP: Not available as service parts. These are standard parts available at your local hardware or parts stores.

ITEM	P/N	DESCRIPTION	TORQUE	QTY.
37	75296	ASSY. WIRE RED 6 GA 42.00 RING/RING		1
38	75297	ASSY. WIRE GRN 6 GA 8.00 RING/RING		2
39	75298	ASSY. WIRE BLK 6 GA 16.00 RING/RING		1
40	75299	NIPPLE HEX REDUCING 3/4 X 1/2 NPT		1
41	75300	SOLENOID LPG/NG 3/4 NPT NC 12VDC		1
42	NASP	NUT NYLOCK 1/2-13		13
43	75301	ISOLATOR 225 LB 30 DURO		4
44	NASP	SLEEVING CONVOLUTED 1/2”		.333 Ft.
45	NASP	BOLT SHCS M8-1.25 X 25MM	10-20 IN LB	2
46	NASP	SCREW SHC #10-32 X 1.00	10-20 IN LB	4
47	NASP	NUT NYLOC #10-32 ZP		4
48	NASP	WASHER LOCK 3/8 ZP		9
49	75302	ADAPTER MIXER 25kW		1
50	75303	ASSY. HARNESS 25kW STARTER		1
51	75304	ASSY. HARNESS 25kW ECM		1
52	NASP	BOLT 1/2-13 X 1.50 GR5 ZP	10-20 IN LB	12
53	75305	BARBED FITTING INTAKE MANIFOLD		1
54	NASP	BOLT HH 3/8-16 X .63 ZP TRILOBE SERR	10-20 IN LB	1
55	75306	CLIP HALF CABLE FASTENER		1
56	NASP	BOLT MM HH M8-1.25 X 18 GR5 ZP	10-20 IN LB	1
57	75307	AIR CLEANER 2.00 ID 1000 CFM		1
58	75308	MIXER/GOV LCS50 25kW 30MM		1
59	75309	EXH PLENIUM COVER EXH SIDE 25kW		1
60	75310	DIODE ASSY. FUEL SOLENOID		1
61	NASP	NUT HEX #10-32 KEPS		1
62	NASP	WASHER LOCK 7/16		4
63	NASP	BOLT HH 1/4-20 X 1.00 GR5		1
64	NASP	WASHER STAR 1/4 EXT		1
65	NASP	NUT NYLOC 1/4-20 ZP		1
66	NASP	TIE WIRE PLST 3.75 LG		2
67	NASP	NUT KEPS 3/8		1
68	75311	ENGINE CONTROL MODULE		1
69	NASP	BOLT HH 3/8-16 X 1.00 GR5 ZP		6
70	NASP	BOLT HEX M6-1 X 16MM		1
71	75312	ASSY. WIRE RED 18GA 4.50 RING/ES		1
72	75313	ASSY. WIRE WHT 18GA 3.5 ES/ES		1

NASP: Not available as service parts. These are standard parts available at your local hardware or parts stores.

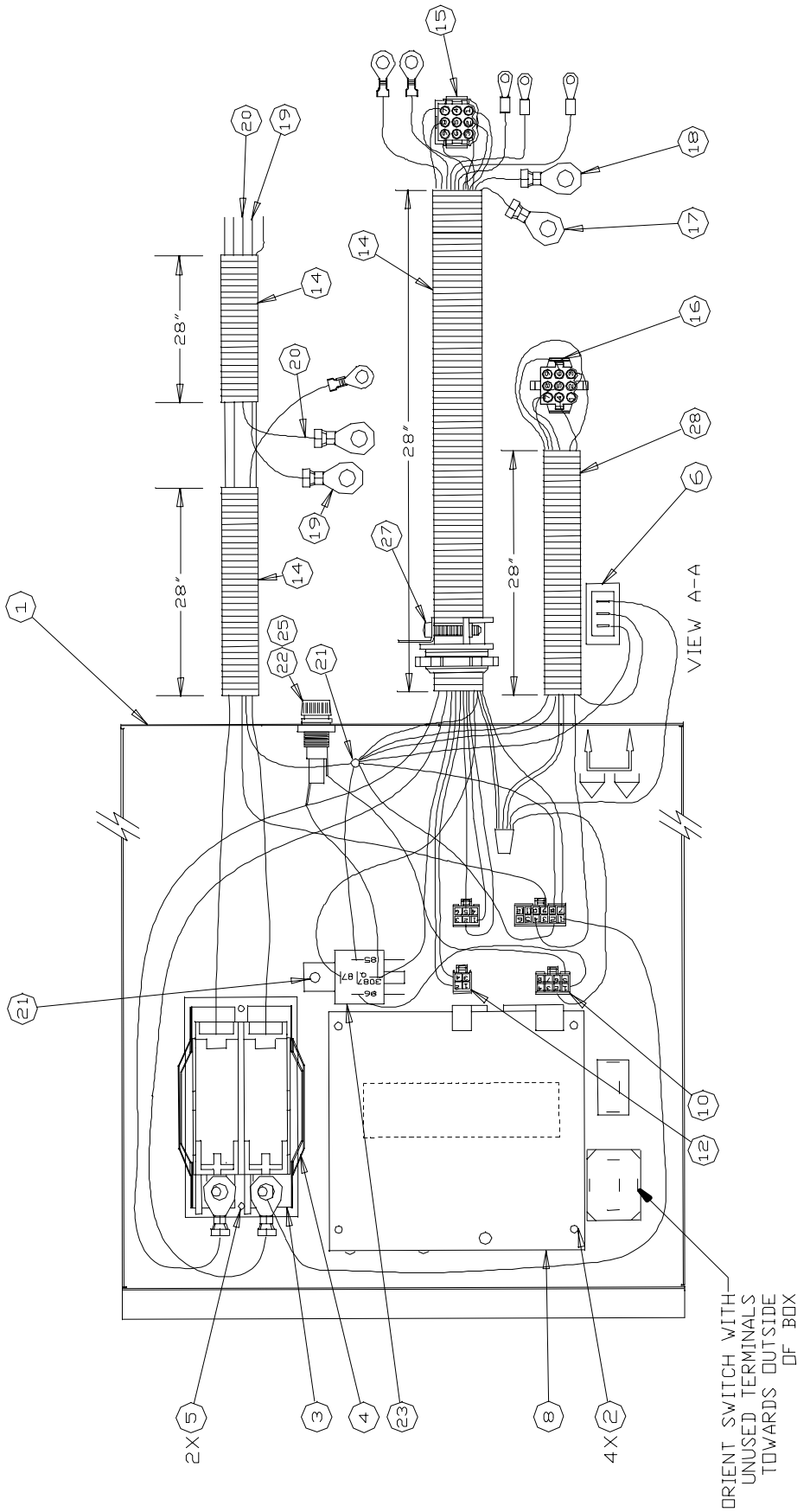
28"
28"
28"
VIEW A-A
2X 5
3
4
23
8
4X 2
ORIENT SWITCH WITH
UNUSED TERMINALS
TOWARDS OUTSIDE
OF BOX

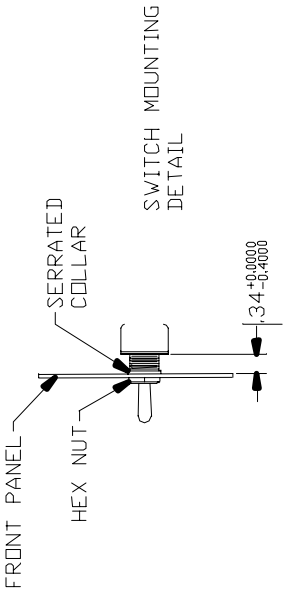
SWITCH MOUNTING
DETAIL
SERRATED
COLLAR
.34+0.0000
-0.4000
FRONT PANEL
HEX NUT

CONTROL BOX PARTS LIST

ITEM	P/N	DESCRIPTION	TORQUE	QTY
1	75314	PANEL CONTROLLER BOX FRONT - Katolight		1
2	NASP	SCREW #06-32 X .25 BLK	3-5 IN LB	4
3	75315	CIR BREAKER 110A 120/240V 10KAIR		1
4	75316	BRACKET MOUNT CIR BREAKER		1
5	NASP	SCREW #08-32 X .25 BLK	3-5 IN LB	2
6	75317	ROCKER SWITCH		1
7	NASP	WIRE CRIMP NUT 2.2K - 13K CM		1
8	75318	CONTROLLER MODULE 25kW - Katolight		1
9	75319	CONNECTOR 12 .17SQ SOC		1
10	75320	CONNECTOR 08 .17SQ SOC		1
11	75321	CONNECTOR 06 .17SQ SOC		1
12	75322	CONNECTOR 04 .17SQ SOC		1
13	75323	FACEPLATE CONTROLLER		1
14	NASP	SLEEVING CONVOLUTED 1”		7.0 Ft.
15	75324	CONNECTOR HSG 9 PIN HI-TEMP		1
16	75325	CONNECTOR HSG 9 SOC		1
17	75326	ASSY. WIRE BLK 6GA 65 RING/RING		1
18	75327	ASSY. WIRE RED 6GA 65 RING/RING		1
19	75328	ASSY. WIRE WHT 6GA 45 RING/DS		1
20	75329	ASSY. WIRE GRN 6GA 45 RING/DS		1
21	NASP	NUT, HEX #10-32 KEPS	15-20 IN LB	4
22	73197	FUSE HOLDER .25 RT ANG QC		1
23	75330	RELAY DC, 40A, NC, .25QC, 12V COIL		1
24	NASP	SCREW HH #10-32 X .50 BLK	15-20 IN LB	2
25	75331	FUSE 10A 250V		1
26	NASP	TIE WIRE PLST 6.06 LG		2
27	75332	CONNECTOR ROMEX 1.0”		1
28	NASP	SLEEVING CONVOLUTED 1/2”		23 Ft.

GENERATOR PARTS LIST **PARTS LIST FOR PAGE 32**
(Following page for exploded view)

ITEM	P/N	DESCRIPTION	TORQUE	QTY
1	75333	COMPLETE MAIN STATOR		1
2	75334	COMPLETE ROTOR		1
3	75335	EXCITER ROTOR		1
4	75336	EXCITER STATOR		1
7	75337	BEARING ‘O’ RING N.D.E.		1
8	75338	BEARING N.D.E.		1
9	75339	RECTIFIER SERVICE KIT W/VAR, DIO		1
10	75340	AVR		1
11	75341	CONTROLLER ATS ASCO 2P 200A 2WS (Not shown in drawing)		1

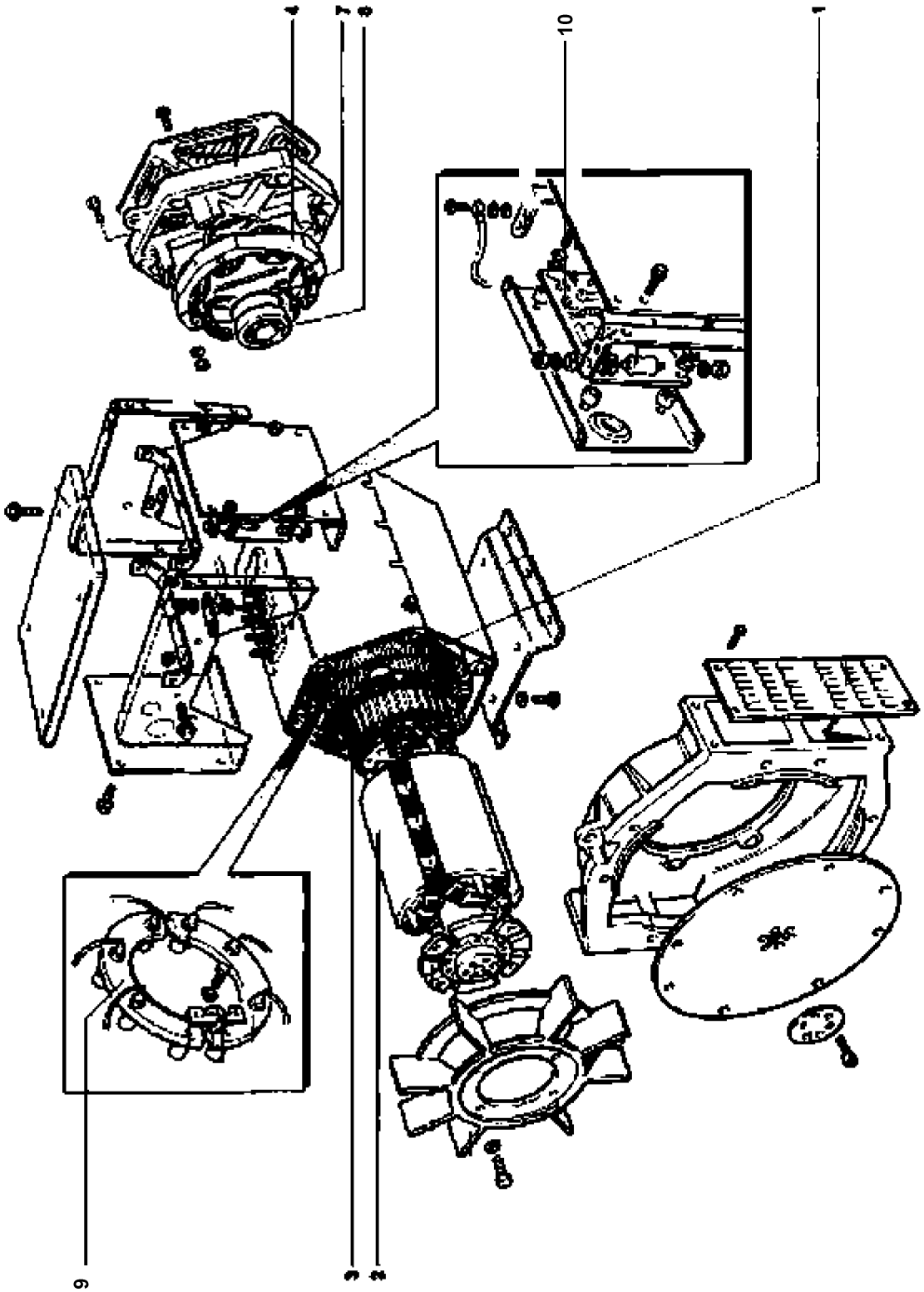
10
9

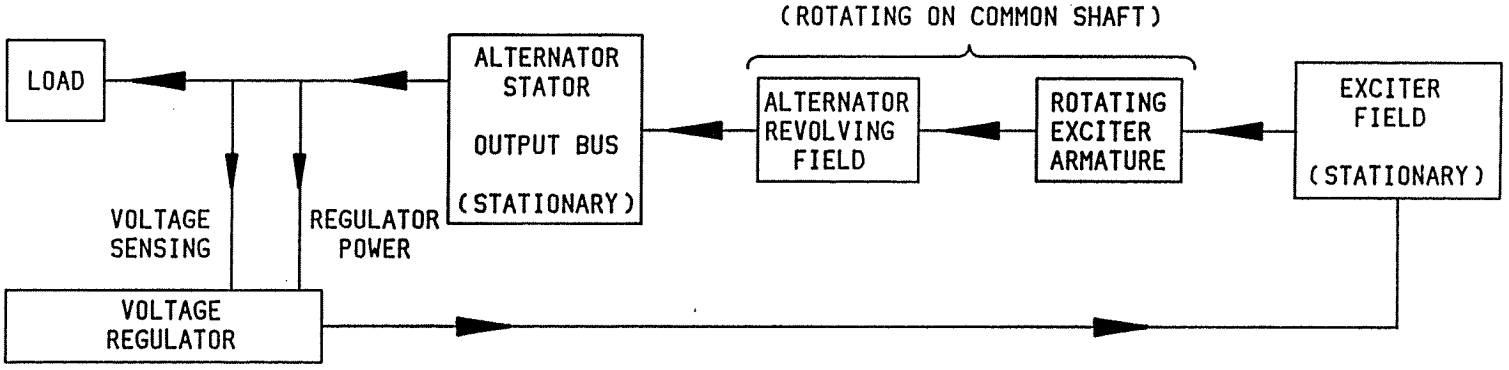
(ROTATING ON COMMON SHAFT)
LOAD
ALTERNATOR STATOR
OUTPUT BUS
(STATIONARY)
ALTERNATOR REVOLVING FIELD
ROTATING EXCITER ARMATURE
EXCITER FIELD
(STATIONARY)
VOLTAGE SENSING
REGULATOR POWER
VOLTAGE REGULATOR

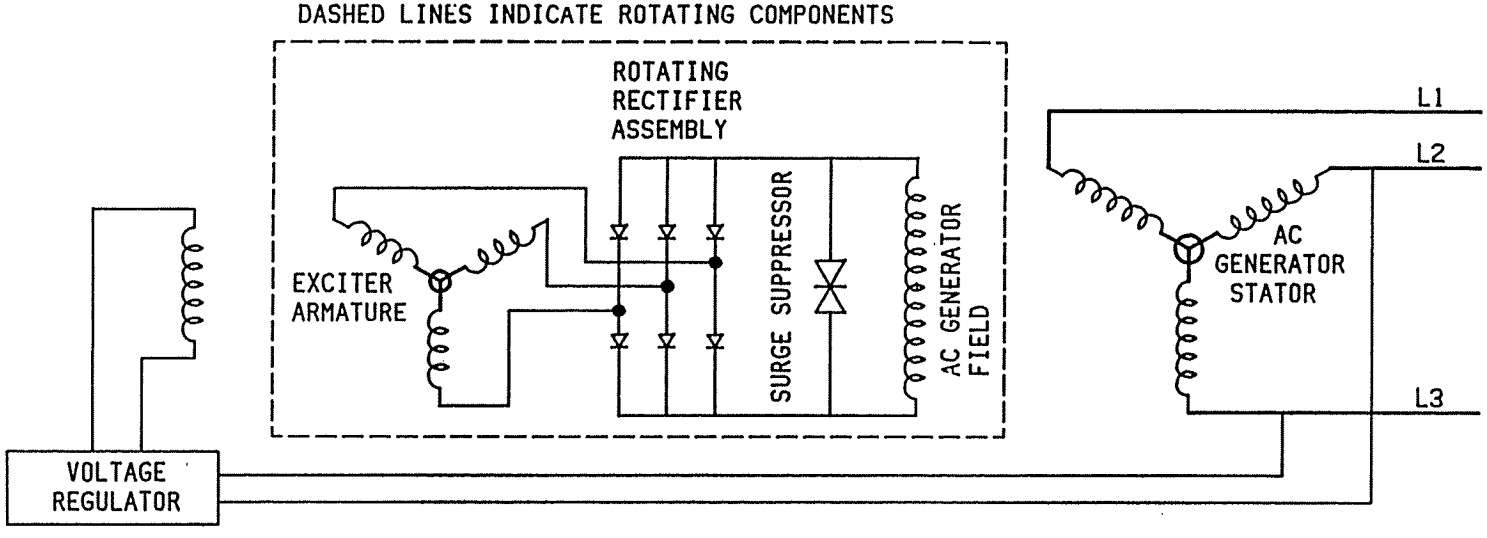
DASHED LINES INDICATE ROTATING COMPONENTS
ROTATING RECTIFIER ASSEMBLY
EXCITER ARMATURE
SURGE SUPPRESSOR
AC GENERATOR FIELD
L1
L2
L3
AC GENERATOR STATOR
VOLTAGE REGULATOR

KAMAG - 14

Stock Generators - Characteristics

Winding Resistance - Corrected to 25 Deg C

Temperature rise: 80
Ambient Temperature: 40

Synchronous Reactance Direct Axis
Transient Reactance Saturated
Subtransient Reactance Direct Axis
Negative Sequence Reactance
Zero Sequence Reactance
Leakage Reactance
Field Circuit with Armature Circuit Open
Field Circuit with Armature Circuit Shorted
Armature Circuit Asymmetrical Short Circuit

Generator Code	Hertz 50/60	Gen KW	Gen KVA	Volts AC	Amps L-L	Stator L-L	Main Field	Exciter Field	Reactances XD	X'D	X"D	X2	X0	XL	Time Constants TD'0	TD'	TA
4P1-0300	50 60	12.5 15.0	15.63 18.75	400 480	22.3 22.3	1.327 ohms	4.7 ohms	38.3 ohms	187.6	28.0	17.0	14.6	1.8	10.7	.494	.011	.004
28AVR3 4P1-0400	50 60	16.7 20.0	20.84 25.00	400 480	30.1 30.1	0.832 ohms	5.4 ohms	38.8 ohms	185.6	24.6	14.0	12.1	1.6	8.6	.565	.041	.004
40AVR3 4P1-0600	50 60	25.0 30.0	31.25 37.50	400 480	45.1 45.1	0.382 ohms	2.6 ohms	38.4 ohms	161.3	19.0	9.7	8.4	1.1	5.8	.672	.039	.005
55AVR3 4P1-0800	50 60	33.3 40.0	41.60 50.00	400 480	60.0 60.2	0.252 ohms	1.9 ohms	36.5 ohms	163.4	19.4	8.0	7.0	0.9	4.7	.725	.036	.005
4P1-1000	50 60	41.6 50.0	52.00 62.50	400 480	75.0 75.2	0.174 ohms	2.2 ohms	36.5 ohms	159.9	17.1	7.6	6.7	1.0	4.4	.769	.035	.005

PUBLICATION NO. AC-1-68E
PUBLICATION DATE - JANUARY 1977

INSTRUCTION MANUAL

for

KAMAG 14 GENERATORS

SERIAL NUMBERS

_____

INCLUDES

GENERAL DESCRIPTION
THEORY OF OPERATION
CHECKOUT AND OPERATION
MAINTENANCE AND TROUBLESHOOTING
DRAWINGS AND PARTS DATA

KATO *Engineering*
SUBSIDIARY OF RELIANCE ELECTRIC

P.O. Box 47 Mankato, Minnesota 56001 Phone: (507) 625-4011 Telex: 29-0786

The purpose of this manual is to provide the user of KATO KAMAG 14 generators with the information required to install, operate and maintain the generator.

—— NOTICE ——

THROUGHOUT THIS MANUAL FREQUENCY IS EXPRESSED IN HERTZ RATHER THAN CYCLES PER SECOND (CPS).

50 Hertz = 50 CPS
60 Hertz = 60 CPS

THIS MANUAL INCLUDES BOHT ENGLISH AND METRIC SYSTEM OF MEASUREMENTS. DIMENSIONS ARE GIVEN IN INCHES AND MILLIMETERS (MM). TEMPERATURE IS GIVEN IN FARENHEIT AND CENTIGRADE AND PRESSURE IS GIVEN IN PSI AND KG/CM^2.

– CAUTION –

CONNECT LOAD LINES AND WIRES WITHIN TERMINAL BOX. THEN INSULATE AND TAPE THE CONNECTIONS BEFORE STARTING GENERATOR SET. REFER TO TABLE D PAGE 2-11 FOR APPROPRIATE ELECTRICAL CONNECTION DIAGRAM. FAILURE TO OBSERVE THIS PRECAUTION CAN RESULT IN SERIOUS ELECTRICAL SHORT CIRCUITS.

PUBLICATIONS NO. AC-1-68E
PUBLICATION DATE: JANUARY 1977
SUPERCEDES PUBLICATION NO. AC-1-68D

Printed in U.S.A.

KATO Engineering Co., MANKATO, MINNESOTA

KATO KAMAG 14 SERIES GENERATORS

This manual contains installation, operation and maintenance instructions for the KAMAG 14 series brushless synchronous revolving field generators. The generators are manufactured in both a single bearing and a two bearing line. Single bearing generators are designed for direct coupling to industrial engines while two bearing generators are designed for flexible coupling or belted coupling to electrical motors or other types of prime movers.

The series is manufactured in three phase 60 hertz ratings of from 10 to 50 kilowatts. The units can be used for 50 hertz operation at 5/6 of the three phase 60 hertz rating and single phase at 2/3 of the three phase rating. A list of the standard sizes of KAMAG 14 generators is given in TABLE A on page 1-3 of this publication. The various voltages obtainable from standard KAMAG 14 generators is given in TABLE B on page 1-3 of the publication.

The KAMAG 14 generator includes brushless exctier mounted within the generator frame and a saturable transformer voltage regulator mounted within the generator outlet box. The saturable transformer voltage regulator utilizes a solid state preamplifier for voltage error detection and control and includes a series-boost circuit which increases regulator output during periods of high line current demands such as when motors are started or if a short occurs in the load. An auto voltage adjust potentiometer, which is standard on all units, permits the user to change the generator output voltage over a range of approximately ten percent below to ten percent above the nominal values given in TABLE B on page 1-3. TABLE D on page 2-11 lists the different ways the generator can be connected to obtain the various output voltages.

The KAMAG14 series has the overall dependability of KATO Engineering Company products. The brushless design and use of saturable transformer type voltage regulator eliminate all movable contacts and brushes. The absence of brushes and contacts which are subject to wear and arcing insures maximum service life with a minimum of periodic preventive maintenance and permits use in hazardous locations where electrical codes do not require explosion proof enclosures. The KAMAG 14 rotor turns on pre-packed shielded ball bearings oversized for maximum service life. No periodic replenishment of grease is required.

In general, the KAMAG 14 generator should require little maintenance other than keeping the unit clean.

For best performance and longest service life, the following procedures are especially important:

MAKE CERTAIN THE GENERATOR IS PROPERLY CONNECTED TO THE PRIME MOVER.

MAKE CERTAIN THE GENERATOR IS CORRECTLY CONNECTED FOR THE LOAD IT IS SUPPLYING.

MAKE CERTAIN THE LOAD DOES NOT EXCEED THE GENERATOR RATING.

MAKE CERTAIN SUFFICIENT COOLANT AIR IS AVAILABLE. KEEP ALL AIR PASSAGES CLEAR OF DUST AND OTHER FOREIGN MATERIAL.

MAKE CERTAIN GENERATOR SPEED IS CORRECT – FREQUENCY IS DIRECTLY PROPORTIONAL TO GENERATOR SPEED. VARIATIONS IN SPEED WILL CAUSE VARIATIONS IN OUTPUT FREQUENCY. RUN GENERATOR 1800 RPM TO PRODUCE OUTPUT FREQUENCY OF 60 HERTZ. RUN GENERATOR 1500 RPM TO PRODUCE OUTPUT FREQUENCY OF 50 HERTZ.

WARRANTY

Kato Engineering Company warrants that the apparatus manufactured by us will deliver its rated output, providing such apparatus is properly installed, properly cared for, and properly operated under normal environmental conditions.

Standard products manufactured by Kato Engineering Company are warranted to be free from defects in workmanship and material for a period of one year from the date of shipment, and any products which are defective in workmanship or material will be repaired or replaced at the option of Kato Engineering Company. Final determination as to whether a product is actually defective rests with Kato Engineering Company. The obligation of Kato Engineering Company hereunder shall be limited solely to repair and replacement at its factory, of products that fall within the foregoing limitations, and shall be conditioned upon receipt by Kato Engineering Company of written notice within the warranty period of any alleged defects or deficiency. No products shall be returned to Kato Engineering Company without its prior consent. In no case can Kato Engineering Company accept shipping charges incurred either through return of defective items to its factory or return of repaired or replacement item to the user. Kato Engineering Company cannot assume responsibility or accept invoices for unauthorized repairs to its components, even though defective. In the case of components, parts, or units purchased by Kato Engineering Company, the obligation of Kato Engineering Company shall not exceed the settlement that it is able to obtain from the supplier thereof.

The life of the products of Kato Engineering Company depends to a large extent upon type of usage thereof, and Kato Engineering Company makes no warranty as to period of service nor as to fitness of its product for specific applications by the buyer unless Kato Engineering Company specifically agrees to otherwise in writing after the proposed usage has been made known to it. In no event will Kato Engineering Company be liable for consequential or incidental damages or for any expense incurred by Buyer due to use or sale of products sold by Kato Engineering Company.

The foregoing warranty is exclusive and in lieu of all other warranties expressed or implied, including but not limited to any warranty of merchantability or of fitness for a particular purpose.

This Warranty does not apply to experimental or developmental products.

KATO ENGINEERING COMPANY
Mankato, Minnesota

– TABLE OF CONTENTS –

SECTION 1 INTRODUCTION & DESCRIPTION	PARAGRAPH	PAGE
INTRODUCTION	1.1	1-1
KAMAG 14 ELECTRICAL POWER GENERATING SYSTEM	1.2	1-1
KAMAG GENERATOR	1.3	1-1
KAMAG BRUSHLESS EXCITER	1.4	1-1
KAMAG VOLTAGE REGULATOR	1.5	1-2
POWER RATINGS	1.6	1-2
THEORY OF OPERATION	1.7	1-3

SECTION 2 INSTALLATION		
RECEIVING INSPECTION	2.1	2-1
UNPACKING AND STORAGE	2.2	2-1
LOCATION	2.3	2-1
MOUNTING SINGLE BEARING GENERATORS	2.4	2-2
COUPLING AND ALIGNMENT OF GENERATOR WITH DISK COUPLING & ENGINE ADAPTOR	2.5	2-2
MOUNTING TWO BEARING GENERATORS	2.6	2-3
SELECTION OF DRIVES FOR TWO BEARING GENERATOR	2.7	2-7
BELT DRIVES – GENERAL INFORMATION	2.8	2-7
V–BELT	2.9	2-7
FLAT BELT	2.10	2-7
GEAR BELTS (TIMING BELTS)	2.11	2-7
GEAR & FLEXIBLE COUPLINGS – GENERAL INFORMATION	2.12	2-7
GEAR DRIVE	2.13	2-7
INSTALLATION & ALIGNMENT OF FLEXIBLE COUPLED DRIVES	2.14	2-8
VIBRATION	2.15	2-9
DOWELING	2.16	2-9
PROTECTIVE DEVICES	2.17	2-9
ELECTRICAL CONNECTIONS	2.18	2-9

SECTION 3 OPERATION		
PRE-OPERATION EQUIPMENT CHECK	3.1	3-1
INITIAL START PROCEDURES FOR THE KAMAG 14 GENERATOR	3.2	3-1
SINGLE GENERATOR OPERATING INSTRUCTIONS	3.3	3-1
OPERATING INSTRUCTIONS FOR PARALLEL OPERATION OF GENERATORS	3.4	3-2
PHASE ROTATION	3.5	3-2
SYNCHRONIZING PARALLELED GENERATORS	3.6	3-2
DIVISION OF POWER LOAD AMONG PARALLELED GENERATORS	3.7	3-2
DIVISION OF REACTIVE KVA AMONG PARALLELED GENERATORS	3.8	3-3
STABILITY ADJUST R8	3.9	3-3
ENGINE IDLE SWITCH	3.10	3-3

SECTION 4 MAINTENANCE		
PREVENTIVE MAINTENANCE	4.1	4-1
BEARING LUBRICATION INFORMATION	4.2	4-1
CLEANING	4.3	4-1
WINDINGS – PROTECTION	4.4	4-2
INSULATION RESISTANCE TEST	4.5	4-2
DRYING WINDINGS	4.6	4-2
TESTING BRUSHLESS EXCITER ROTATING RECTIFIERS WITH AN OHMMETER	4.7	4-2
TESTING BRUSHLESS EXCITER ROTATING RECTIFIERS WITH A TEST LAMP	4.8	4-3
TESTING SURGE PROTECTOR WITH TEST LAMP	4.9	4-3
RESTORING RESIDUAL MAGNETISM	4.10	4-4
TESTING VOLTAGE REGULATOR COMPONENTS	4.11	4-4
REMOVING BEARINGS	4.12	4-5
INSTALLING BEARINGS	4.13	4-5
TROUBLESHOOTING	4.14	4-5
TWO BEARING KAMAG 14 GENERATOR DISASSEMBLY INSTRUCTIONS	4.15	4-8
SINGLE BEARING KAMAG 14 GENERATOR DISASSEMBLY INSTRUCTIONS	4.16	4-8

LIST OF ILLUSTRATIONS

SECTION 1 INTRODUCTION & DESCRIPTION

FIGURE 1-1 KAMAG 14 AC GENERATOR 1-0
FIGURE 1-2 GENERATOR FRAME AND STATOR ASSEMBLY 1-1
FIGURE 1-3 GENERATOR ROTOR AND EXCITER ARMATURE ASSEMBLY 1-1
FIGURE 1-4 KAMAG STATIC REGULATOR ASSEMBLY 1-2
FIGURE 1-5 BLOCK DIAGRAM KAMAG 14 ELECTRICAL POWER GENERATING SYSTEM 1-3

SECTION 2 INSTALLATION

FIGURE 2-1 CHECKING BEARING END CLEARANCE 2-3
FIGURE 2-2 ENGINE AND GENERATOR COUPLING DIMENSIONS 2-4
FIGURE 2-3 MEASURING DISTANCE FROM GENERATOR ADAPTER TO DRIVE DISKS 2-4
FIGURE 2-4 CHECKING ENGINE FLYWHEEL HOUSING RUNOUT 2-5
FIGURE 2-5 CHECKING ENGINE FLYWHEEL RUNOUT 2-5
FIGURE 2-6 ALIGNING GENERATOR TO ENGINE WITH PILOT BOLTS 2-5
FIGURE 2-7 MOUNTING GENERATOR TO BASE 2-6
FIGURE 2-8 CHECKING GENERATOR SHAFT RUNOUT 2-6
FIGURE 2-9 CROSS SECTIONAL VIEW – DRIVE DISKS & FLYWHEEL 2-6
FIGURE 2-10 TESTING ANGULAR ALIGNMENT OF MOTOR & GENERATOR SHAFTS 2-8
FIGURE 2-11 TESTING ANGULAR ALIGNMENT OF MOTOR & GENERATOR SHAFTS FOLLOWING COUPLING INSTALLATION 2-8
FIGURE 2-12 TESTING PARALLEL ALIGNMENT OF MOTOR AND GENERATOR SHAFTS 2-9
FIGURE 2-13 TESTING PARALLEL ALIGNMENT OF MOTOR AND GENERATOR SHAFTS FOLLOWING COUPLING INSTALLATION 2-9
FIGURE 2-14 KAMAG 14 TERMINAL BOX AND OPTIONAL CONTROL PANEL 2-10
FIGURE 2-15 ENGINE IDLE SWITCH CONNECTION DIAGRAM 2-11
FIGURE 2-16 ELECTRICAL CONNECTION DIAGRAM, THREE PHASE THREE WIRE PARALLEL DELTA 2-12
FIGURE 2-17 ELECTRICAL CONNECTION DIAGRAM, THREE PHASE THREE WIRE SERIES DELTA 2-12
FIGURE 2-18 ELECTRICAL CONNECTION DIAGRAM, THREE PHASE FOUR WIRE PARALLEL WYE 2-13
FIGURE 2-19 ELECTRICAL CONNECTION DIAGRAM, THREE PHASE FOUR WIRE SERIES WYE 2-13
FIGURE 2-20 ELECTRICAL CONNECTION DIAGRAM, SINGLE PHASE THREE WIRE AND SINGLE PHASE TWO WIRE 2-14
FIGURE 2-21 ELECTRICAL CONNECTION DIAGRAM, SINGLE PHASE TWO WIRE 2-14

SECTION 3 OPERATION

FIGURE 3-1 SYNCHRONIZING PARALLELED GENERATOR USING SYNCHRONIZING LIGHTS 3-3
FIGURE 3-2 SIDE VIEW – VOLTAGE REGULATOR 3-3

SECTION 4 MAINTENANCE

FIGURE 4-1 TESTING ROTATING RECTIFIERS WITH AN OHMMETER 4-3
FIGURE 4-2 TEST LAMP 4-3
FIGURE 4-3 ROTATING RECTIFIERS 4-3
FIGURE 4-4 TRANSISTORS, PHYSICAL ILLUSTRATION – BOTTOM VIEW 4-4
FIGURE 4-5 TRANSISTORS, SCHEMATIC 4-4
FIGURE 4-6 REMOVING BEARING 4-5
FIGURE 4-7 INSTALLING BEARING 4-5
FIGURE 4-8 EXPLODED VIEW DRAWING, TWO BEARING KAMAG 14 GENERATOR 4-10
FIGURE 4-9 EXPLODED VIEW DRAWING, SINGLE BEARING KAMAG 14 GENERATOR 4-11

– LIST OF TABLES –

TABLE A POWER RATINGS OF KAMAG 14 GENERATORS. 1-3
TABLE B FREQUENCY AND VOLTAGE RATINGS OF KAMAG 14 GENERATORS 1-3
TABLE C ALLOWABLE FLYWHEEL AND DRIVE DISK RECESS RUNOUT 2-5
TABLE D GENERATOR CONNECTIONS AND OUTPUT VOLTAGES 2-14
TABLE E PREVENTIVE MAINTENANCE SCHEDULE 4-1
TABLE F TRANSISTOR TEST CHART. 4-5
TABLE G TROUBLESHOOTING CHART 4-6
TABLE H PART DESCRIPTION TABLE FOR FIGURE 4-8, TWO BEARING KAMAG 14 GENERATOR 4-9
TABLE I PART DESCRIPTION TABLE FOR FIGURE 4-9, SINGLE BEARING FLEXIBLE DISK COUPLED KAMAG 14 GENERATORS 4-9

METER CABINET
(OPTIONAL)

MANUFACTURED IN SINGLE BEARING WITH ADAPTOR AND FLEXIBLE DISK TYPE COUPLING ADAPTABLE TO ALL STANDARD ENGINES; AND TWO BEARING SERIES FOR BELTED OR COUPLED SERVICE.

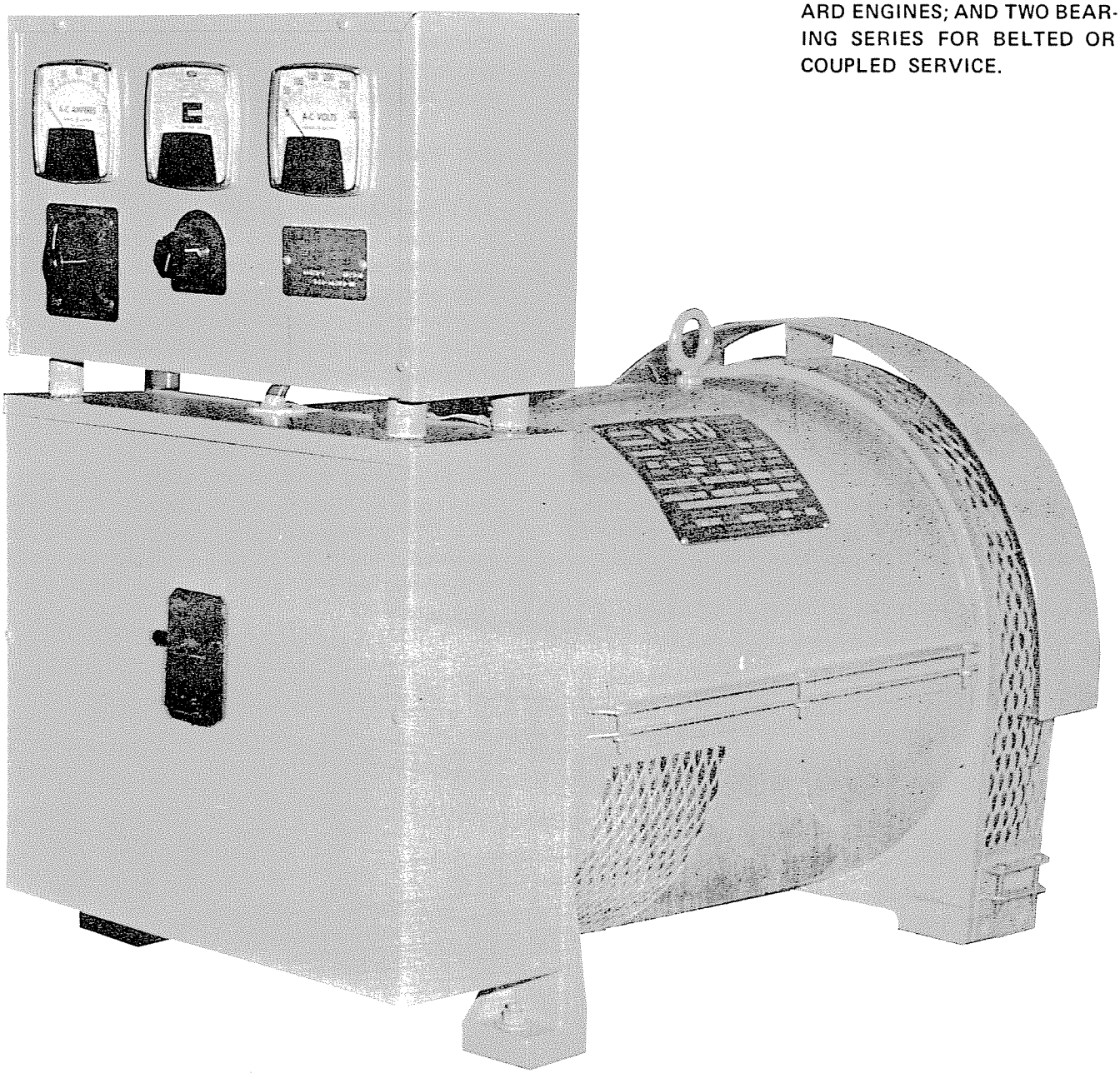

VOLTAGE REGULATOR MOUNTED IN SPACIOUS TERMINAL BOX WITH ADEQUATE ROOM FOR AIR CIRCUIT BREAKERS

FIGURE 1-1 KAMAG 14 AC GENERATOR

SECTION 1 INTRODUCTION & DESCRIPTION

1.1 INTRODUCTION

1.1.1 The KAMAG 14 series by Kato Engineering Co. is a complete electrical power generating system including AC generator, brushless exciter and magnetic amplifier type voltage regulator designed and built to be light enough to be easily movable, rugged enough to be durable and versatile enough to be part of any fixed installation.

1.1.2 The magnetic amplifier type voltage regulator includes such features as 2% regulation, current boost to provide short circuit current capabilities and excellent motor starting capabilities. RFI suppression to meet MIL-1-16910, ruggedness and simplicity of design.

1.1.3 The KAMAG 14 generator and voltage regulator has been designed as an electrical power generating system and therefore complete component compatibility can be assured.

1.1.4 The instruction manual has been compiled to provide receiving and inspection procedures, precautions and recommendations as to assembly to prime movers and location for operation, initial start-up and operation instuctions, and routine maintenance recommendations. With proper maintenance and operation, the KAMAG 14 generator will provide many years of trouble-free service.

1.2 KAMAG 14 ELECTRICAL POWER GENERATING SYSTEM

1.2.1 The KAMAG 14 electrical power generating system can be divided into three basic components; the AC generator, brushless exciter and static regulator. Each component has been designed and built to insure maximum simplicity and reliability without sacrificing quality and performance.

1.3 KAMAG GENERATOR

1.3.1 The KAMAG Generator in a word is versatility. Many different configurations can be supplied to aid in coupling to the prime mover. The two bearing arrangement can be used wherever it is impracticable to have the power output shaft of the prime mover support the drive end of the generator rotor. KAMAG 14 generators of two bearing design use an antifriction bearing on each end of the shaft to support the rotor assembly. The two bearing type generator can be driven through any non-weight bearing coupling such as "V" belts, rubber block, spring, etc.

1.3.2 The KAMAG Generator is also manufactured in a single bearing line where the power input end of the rotor is supported by the prime mover. The generator frame and rotor can be purchased to fit any standard SAE flywheel and flywheel housing in its size range. Adaption can also be made to several commonly used non-SAE drives. A weight bearing semiflexible laminated plate coupling is furnished with the single bearing units for direct coupling to the prime mover.

1.3.3 When the single bearing configuration is requested it will be furnished with mounting feet on the adaptor unless otherwise specified. These mounting feet will allow the generator to support the power output end of the prime mover to simplify subbase design.

1.4 KAMAG BRUSHLESS EXCITER

1.4.1 The KAMAG Brushless Exciter is a revolving armature, three phase, high frequency generator, the output is rectified by a three diode rectifier bridge mounted directly on the main generator shaft. The exciter armature is pressed into position on the main generator shaft and held in place by a square key and locking nut. The exciter stator is secured to the endbell assembly. The purpose of the exciter is to provide a rotating magnetic amplifier to supply power to the main generator field.

1.4.2 By using the brushless design, components such as slip rings, commutators, brushes, or any form of sliding contacts that wear and need periodic maintenance have been eliminated. The rectifiers used in the rectifier bridge are of a type that are self protected against failure from voltage transients.

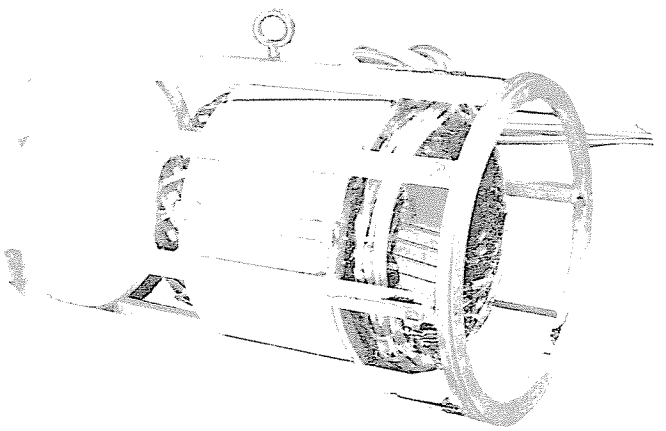

FIGURE 1-2 GENERATOR FRAME & STATOR ASSEMBLY

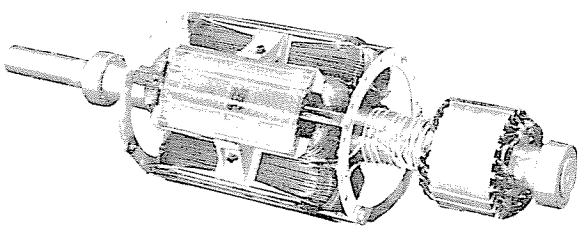

FIGURE 1-3 GENERATOR ROTOR & EXCITER ARMATURE ASSEMBLY

1.5 KAMAG VOLTAGE REGULATOR

1.5.1 The brushless generator uses a stationary exciter field to control the generator output power. The regulator provides power to the exciter field, changing field excitation automatically to maintain the generator output voltage at a near constant level regardless of changes in the load.

1.5.2 The regulator is designed to maintain the generator output voltage within 2% of the pre-set value, from no load to full rated KW and is capable of providing more than 200% rated short circuit current for motor starting loads. The regulator obtains its power from the generator output voltage and the generator output current.

1.5.3 The regulator is of the magnetic amplifier type. A highly reliable saturable transformer and solid state pre-amplifier are used.

1.5.4 The KAMAG voltage regulator consists of four basic circuits:

1) Sensing and differential detector
2) Differential preamplifier
3) Saturable transformer
   (basically a magnetic amplifier)
4) Output rectifier bridge

The first two circuits are incorporated on a rugged printed circuit board that is securely mounted to the regulator base plate. The components are mounted on the printed circuit board and are epoxied to the board to prevent movement under vibration from the operation of the unit. The saturable transformer is mounted on the voltage regulator base plate. The regulator base plate is a rigid formed steel plate with provision for three point mounting in the outlet box.

1.5.5 The regulator is designed so that the generator voltage and current add vectorially in a saturable transformer TS-1 to provide the field excitation necessary to maintain the generator output within the regulation band. A dc control winding on the saturable transformer is able to control the output of the secondary of the transformer.

1.5.6 A transistor amplifier senses the generator voltage, compares it with a reference voltage, and causes the dc control current to respond to varying load conditions. Increasing control current causes a reduction in generator voltage and a decrease in control current causes an increase in generator voltage.

1.5.7 The saturable transformer TS-1 and linear reactor L1 are designed to match the generator open-circuit exciter field characteristics. The current boost is designed to match load conditions.

1.5.8 In order to provide voltage range adjustments and compensate for temperature variations, the dc control winding provides control over the maximum flux density in the saturable transformer and therefore the maximum voltage output that the transformer will support.

1.5.9 The output of the saturable transformer is rectified and fed to the exciter field. Thus, the generator terminal voltage is maintained at the pre-set level by controlling the regulator output. The setting of the voltage adjust potentiometer and voltage range adjust potentiometer determines the pre-set level. Adjusting the voltage adjust potentiometer allows an adjustment of the generator voltage.

1.5.10 Since the dc control winding consists of a large number of turns and the flux density depends on ampere-turns the control current can be in the order of milliamperes. The resultant current gain allows the use of a transistor pre-amplifier for close regulation.

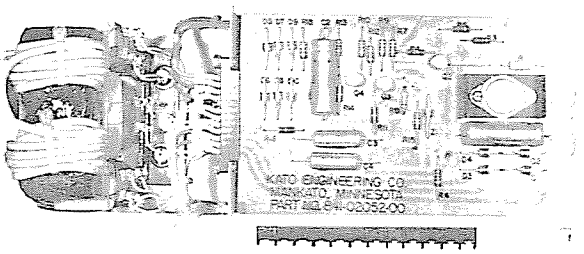

FIGURE 1-4 KAMAG STATIC REGULATOR ASSEMBLY

1.6 POWER RATINGS

1.6.1 The KAMAG 14 generator is manufactured utilizing a three phase stator winding. Twelve leads are connected to the stator windings and brought out to the outlet box at the end of the generator. By making the proper connection, this feature permits use of the KAMAG 14 generator to supply common three phase and single phase voltages. The units will also operate at either 60 hertz or 50 hertz.

1.6.2. TABLE A, page 1-3 lists the standard sizes of KAMAG 14 generator, gives the three phase, 60 hertz rating and also gives the comparative rating for 50 hertz and single phase operation. TABLE B, page 1-3 lists the various voltages obtainable from the KAMAG 14 generator when the appropriate connections are made. A voltage adjust rheostat provides a means of obtaining additional changes in voltage. It permits a voltage change over a range of approximately ten percent below to ten percent above the values given in TABLE B. TABLE D, page 2-11 lists the connections that must be made to obtain the desired voltage. The various connections are shown in figures 2-16 through 2-21, pages 2-12 through 2-14.

1.6.3. The standard KAMAG 14 generator is manufactured with a three phase, 60 hertz temperature rise rating of 70° centigrade.

The following conditions apply to all standard KAMAG 14 generators:

1. All units capable of 50 hertz operation at 5/6ths of the 60 hertz voltage and KVA.

2. All three phase units reconnectable to single phase at 2/3 rating. All single phase units reconnectable to three phase at 3/2 single phase rating.

3. All standard KAMAG 14 generators are rated 70° C temperature rise for three phase operation. When connected single phase, the temperature rise will be 90° C.

4. Three phase units have overload capacity of ten percent NEMA standby. No overload capabilities are offered when connected single phase.

5. By turning the voltage adjust potentiometer, the operator of KAMAG 14 generators can obtain output voltage over a range of approximately ten percent lower to ten percent higher than the nominal values given in TABLE B.

1.7 THEORY OF OPERATION

1.7.1 The generator output voltage is produced in the generator stationary armature (stator). Voltage is induced into the stator windings by a rotating magnetic field produced by the turning generator field.

1.7.2 In order for the generator field to become magnetized and produce a rotating magnetic field, a dc voltage (excitation) must be fed to the generator field coils and the generator rotor must be turning.

1.7.3 The excitation voltage is supplied by the exciter. The exciter field poles retain some permanent magnetism thus producing a magnetic field in the exciter. When the generator is started, voltage is induced in the exciter armature windings, fed to the rotating rectifiers, rectified and fed to the generator field. The generator field then becomes magnetized and produces a rotating magnetic field. Control of the degree of magnetism of the generator field and thus the voltage induced into the generator stator windings is dependent on the voltage it is supplied by the exciter. This is controlled by regulating the exciter field by controlling the field current fed to the exciter. The voltage regulator supplies and controls the field current fed to the exciter field.

TABLE A POWER RATINGS OF KAMAG 14 GENERATORS

MANUFACTURER'S CODE	3 PHASE 60 HERTZ		3 PHASE 50 HERTZ		SINGLE PHASE 60 HERTZ		SINGLE PHASE 50 HERTZ	
	KW	KVA	KW	KVA	KW	KVA	KW	KVA
4P1-0300	10	12.5	8.33	10.42	6.67	8.33	5.55	6.95
4P1-0300	15	18.75	12.50	15.63	10	12.5	8.33	10.42
4P1-0400	20	25.0	16.67	20.83	13.33	16.67	11.11	13.89
4P1-0600	30	37.5	25	31.25	20	25	16.67	20.83
4P1-0800	40	50	33.33	41.67	26.67	33.33	22.22	27.78
4P1-1000	50	62.5	41.67	52.08	33.33	41.67	27.78	34.72

TABLE B FREQUENCY AND VOLTAGE RATING OF KAMAG 14 GENERATORS

RPM	HERTZ	VOLTAGE	
		3 PHASE	SINGLE PHASE
1800	60	120/208 - 139/240 240/416 - 277/480	120/240
1500	50	100/173 - 115/200 200/346 - 230/400	115/230

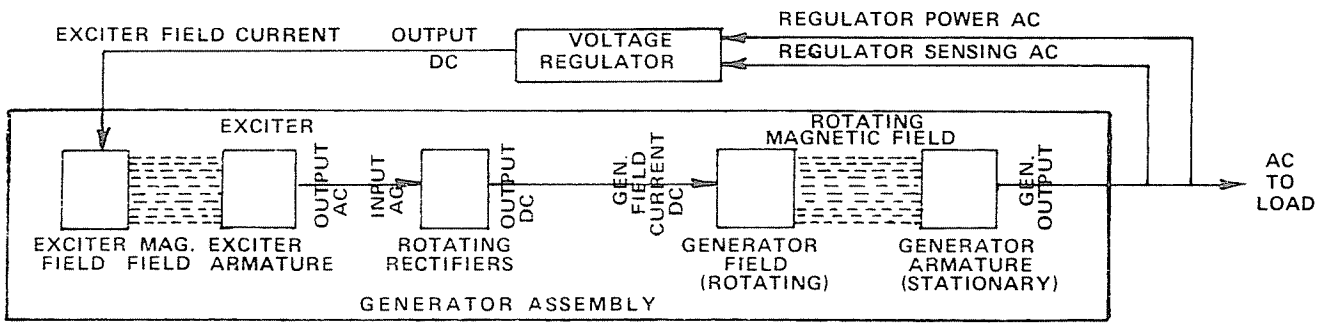

FIGURE 1-5 BLOCK DIAGRAM KAMAG 14 ELECTRICAL POWER GENERATING SYSTEM

SECTION 2 INSTALLATION

2.1 RECEIVING INSPECTION

2.1.1 The KAMAG 14 generator is carefully packed and crated for shipment, and can withstand most shocks incurred during transit. Before accepting shipment from the transportation company examine the crating carefully to determine if any damage has occurred during shipment. Unpack the unit as described in paragraph 2.2 and then carefully examine the sheet metal frame and exciter cover for signs of damage. Remove terminal box cover and examine the inside of the terminal box for signs of damage to wiring and components. Inspect for loosely mounted components and the presence of moisture. Inspect to make certain foreign material such as crating nails, loose bolts or packing material which may have fallen into the machine during unpacking are removed. On two-bearing machine turn the rotor by hand to make certain it rotates freely without binding. If damage is noted, determine the extent of damage and immediately notify the transportation company claims office and KATO Engineering Company. Be sure to give complete and accurate details when reporting damage.

2.1.2 If the generator is to be placed in storage repackage and crate the generator set. Recommended procedures for storage are contained in paragraph 2.2.

2.2 UNPACKING AND STORAGE

2.2.1 If the generator is received during cold weather, let the crated unit slowly warm to room temperature before removing the protective crating and packing material. This precaution will minimize the condensation of moisture on coil surfaces, eliminating the possibilities of wet windings and insulating materials which could cause early malfunctions of the generator.

2.2.2 Unpack the generator with care to avoid damage to the unit. Move the generator to the mounting location by attaching an overhead hoist to the eye-bolts installed in the generator frame. Determine that the hoist, when used, is of sufficient strength to adequately support the weight of the generator. Hoist and hoist cables should have a rating of not less than 1½ times the weight of the generator.

CAUTION

ALWAYS MAKE CERTAIN EXTREME CARE IS TAKEN WHEN MOVING THE GENERATOR TO PREVENT ITS STRIKING OTHER OBJECTS OR PERSONNEL. NEVER APPLY A LIFTING FORCE TO STRUCTURAL POINTS OTHER THAN THE LIFTING EYELETS.

2.2.3 If the generator is not to be installed in its operating location as soon as received, it should be stored in a clean, dry area, not subject to sudden temperature or humidity changes. If possible, storage should be in an ambient temperature of approximately normal room temperature. Units which cannot be stored in a temperature and humidity controlled area and which are to be in storage for a period of longer than six months should be prepared for storage as follows:

a. Install desiccant bags under the generator cover and inside the terminal box and vacuum seal the unit in a covering of polyethelene.

b. Adequately tag the unit to ensure that desiccant bags are removed before the generator is placed in operation.

2.3 LOCATION

2.3.1 The KAMAG 14 series generator can be installed in any well ventilated area which affords sufficient accessibility for operation and maintenance of the unit and allows a sufficient unobstructed flow of coolant air. Avoid locations which subject the generator to excessive moisture, dust, steam or the fumes from acids, alkalines or other corrosive chemicals. If such exposure cannot be avoided, establish a rigidperiodic preventive maintenance schedule. The adverse effect of excessive moisture can usually be eliminated or at least greatly lessened by the use of space or strip heaters. If the generator windings have become wet, check winding insulation resistance and if low, dry windings before operating generator. Refer to paragraphs 4.5 and 4.6.

2.3.2 The foundation or supports which mount the generator and prime mover must be rigid, level and of ample size and strength to support the weight of the generator and prime mover. Although a reinforced concrete foundation usually makes the best foundation for heavy machinery, the generator and prime mover may be placed on any concrete, steel or other structural material which will adequately support the weight of the unit. Bearing loads of structural materials can be obtained by referring to engineering handbooks.

2.4 MOUNTING SINGLE BEARING GENERATORS

2.4.1 The generator can be mounted on an extension of the engine base or on a separate foundation which is properly aligned and level with the engine foundation. Install shims between the generator base and the mounting surface as necessary to level and properly align the generator with the prime mover.

2.5 COUPLING & ALIGNMENT OF GENERATOR WITH DISK COUPLING AND ENGINE ADAPTOR

2.5.1 The disk coupling consists of several steel disks which are securely bolted to the generator rotor and to the engine flywheel. Because close tolerances are maintained in the manufacture of the engine components, generator frame and drive disks, the only alignment procedures which should normally be required are to make certain the rotor shaft and the engine flywheel are properly aligned and that the generator bearing has a nominal endclearance of: Total engine crankshaft axial movement plus 1/16 inch (1.588 millimeter). To insure proper alignment check the dimensions listed in the following steps.

NOTE: Clean accumulations of dirt or grease from mounting surfaces before checking dimensions or assembling the generator to the engine.

1. Remove generator wrapper cover and terminal box cover.

2. Check generator bearing endclearance and alignment of exciter field and exciter armature. Dimension a' ,figure 2-1 should compare with dimension given in instruction INS-2-70A supplied with generator. Exciter field and exciter armature should be aligned horizontally.

3. Check the distance from the engine bell housing mounting surface and the drive disk recess (dimension C, figure 2-2) and check the distance from the generator endring mounting surface to the outside surface of the drive disks (dimension "Y" figure 2-2). Dimension "Y" should equal dimension "C".

NOTE: The generator rotor shaft should be parallel with the generator frame when checking dimension "Y".

If "C" is more than "Y" install additional spacers between the generator drive hub and the drive disks.

NOTE: An additional spacer is normally supplied with generator.

If "Y" is more than "C" remove spacers from between the generator drive hub and drive disks.

4. Check the diameter of the drive disks and the flywheel drive disk recess, dimensions S and S , figure 2-2. If the drive disks are over or under size return them to the factory. Do not attempt to grind the drive disks.

5. Check to make certain drive disk and flywheel drive disk recess bolt hole centers are equal, dimensions B and B , figure 2-2. Return drive disks and give flywheel data if disks do not "match" flywheel dimensions. Never attempt to drill out drive disk holes.

6. With indicator base mounted on the flywheel and the indicator finger on the flywheel housing as shown in figure 2-4, turn the engine through one revolution. Maximum total indicator reading should not exceed .003 inch per foot diameter or approximately .025 millimeter per 100 millimeter diameter of the flywheel housing. See TABLE C. If runout exceeds limits, contact KATO Engineering Company and the engine manufacturer for recommendations. State flywheel housing size and runout recorded.

7. With indicator base mounted on the flywheel housing and the indicator finger on the drive disk recess as shown in figure 2-5, turn the engine through one revolution and check runout. Maximum total indicator reading should not exceed .003 inch per eachfoot diameter or approximately .025 millimeter per 100 millimeter diameter of the flywheel. Refer to TABLE C. If runout exceeds limits, contact KATO Engineering Company and the engine manufacturer and state flywheel size and runout recorded.

2.5.2 When dimensions are satisfactory, assemble the generator to the engine as described in the following steps:

NOTE: The generator is connected to the engine by inserting bolts from the generator side and tightening them into the threaded holes in the engine flywheel and flywheel housing. Bolts must be of proper length to assure adequate threading into the holes in the engine flywheel and flywheel housing.

1. Make two pilot bolts by removing heads of bolts and starting them into the holes in the engine flywheel and flywheel housing on a line across the center of the mounting surfaces as shown in figure 2-6.

2. Install lockwashers on the generator adapter endring to bell housing bolts. Install lockwashers on the drive disk to flywheel bolts.

NOTE: If there is not sufficient clearance in flywheel to permit tightening of the bolts which secure the drive disks to the flywheel, the use of spacers as shown in figure 2-9 will usually alleviate the problem.

3. Most fans are made up of two halves. This type fan can be taken apart for more working space.

NOTE: The fan was set at the factory with clearance between the fan and baffle which would provide maximum efficiency of the fan. Before loosening and moving the fan, mark position of fan on shaft. Reinstall fan to marked position approximately ½ inch or 12.7 millimeters clearance between fan and fan baffle is normal.

4. Support the generator from an overhead hoist and move the generator horizontally into place. Make certain drive disks fit completely into the drive disk recess in the flywheel.

5. Install the flywheel bolts. Tighten bolts alternately and evenly. Remove the pilot bolt and install and tighten remaining bolt.

CAUTION

Make certain bolts are not of excessive length, such that they bottom out in flywheel before they tighten against drive disks.

6. Install and tighten alternately and evenly the flywheel housing bolts. See figure 2-7. Remove the pilot bolt and install the remaining bolt.

CAUTION

Make certain bolts do not bottom out before they securely hold generator adapter against the flywheel housing.

7. Retighten each bolt completely around the mounting of both the disk coupling and generator adapter.

8. Use a feeler gage to see if there is a gap between the generator mounting feet and the generator mounting base. Add shims as necessary between the generator mounting feet and the base and then bolt the generator to the base.

9. If space permits, attach a dial indicator to the generator adapter with the dial indicator point on the generator shaft as shown in figure 2-8. Turn the engine through one revolution. Maximum total indicator reading should not exceed .005 inch or .127 millimeter.

NOTE: FAN MUST BE MOVED TO PERMIT ACCESS TO DIAL INDICATOR.

10. When alignment checks are satisfactory, reposition and tighten fan.

NOTE: Install fan to its original position on shaft. This should have been indicated by marking the shaft before moving or removing fan. Fan should be between ¼ and ½ inch or 6.35 and 12.7 millimeter from baffle when properly positioned.

2.5.3 After coupling and alignment of the generator and engine is complete but before placing generator set in operation, check clearance between generator stationary and rotating parts, especially the exciter field and exciter armature. Replace all covers and guards before placing generator set in operation.

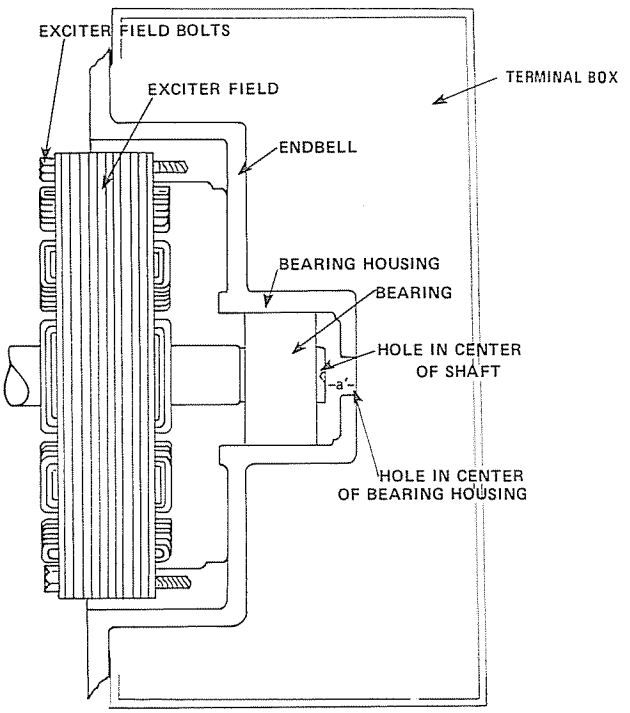

FIGURE 2-1 CHECKING BEARING END CLEARANCE
Refer to Instruction INS-2-70A supplied with the generator.

2.6 MOUNTING TWO BEARING GENERATORS

2.6.1 Two-bearing belt driven generators can be mounted on an extension of the prime mover base or on a separate foundation. Two-bearing generators which are connected to the prime mover by solid or flexible couplings or gear drives must be mounted on a rigid base. This base must provide mounting for both the generator and prime mover. The base must be placed on a level foundation and secured in place before the prime mover and generator are aligned. Refer to paragraphs 2.7 through 2.16.

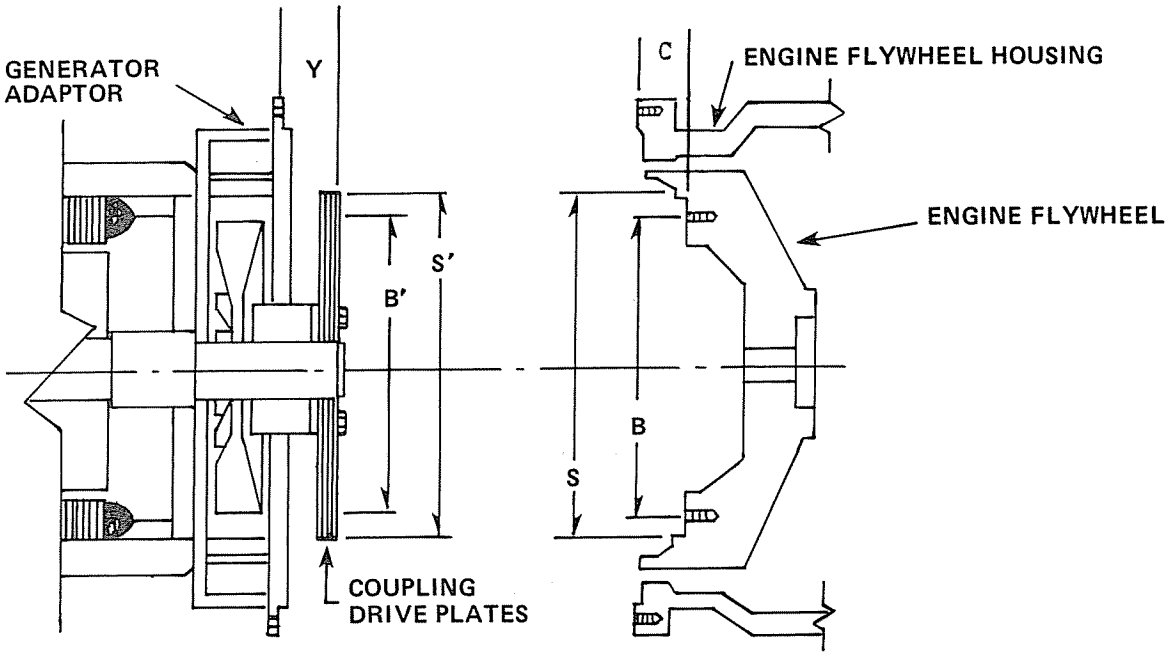

FIGURE 2-2 ENGINE AND GENERATOR COUPLING DIMENSIONS

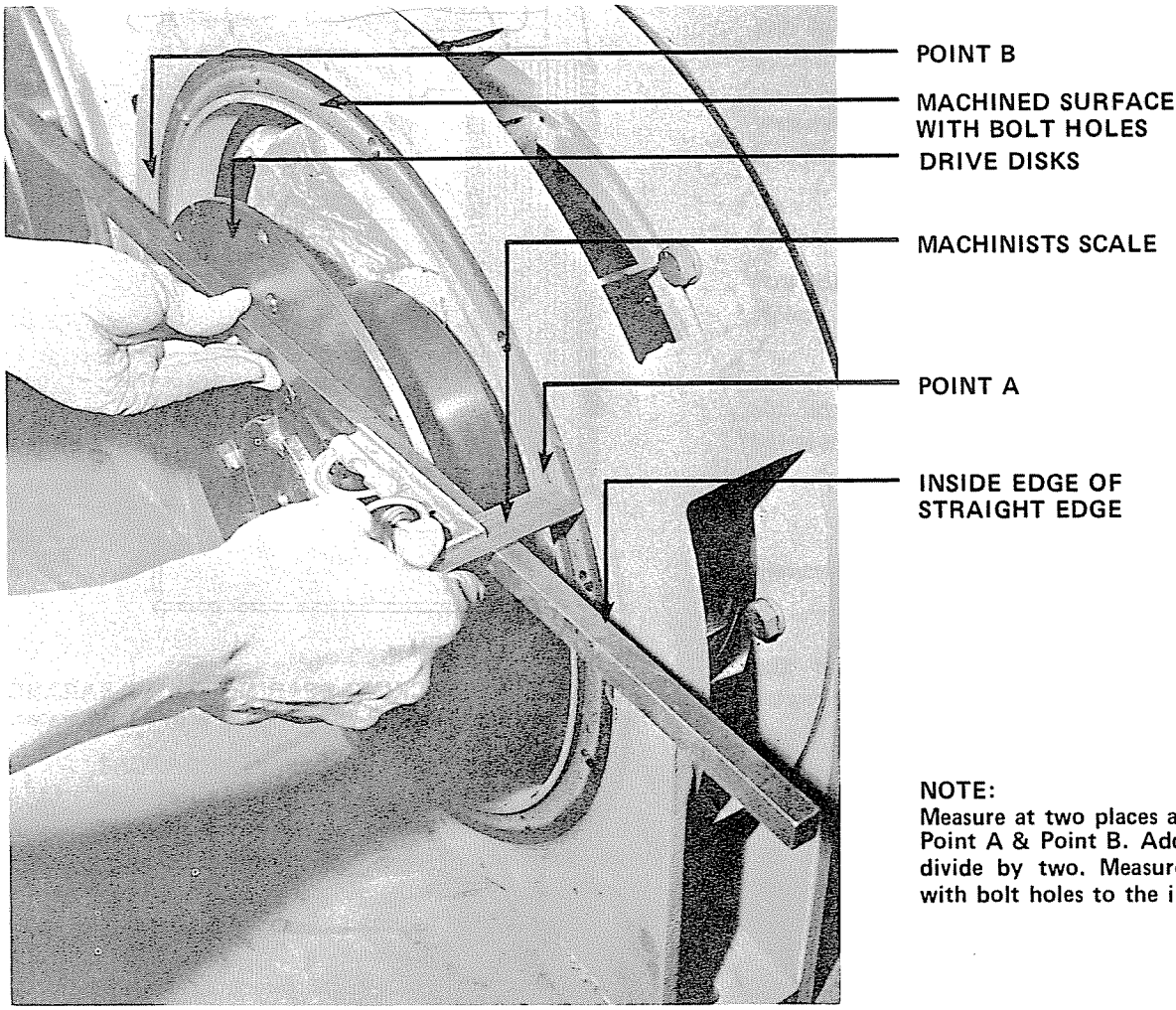

NOTE:
Measure at two places approximately 180° apart. Point A & Point B. Add the two dimensions and divide by two. Measure from machined surface with bolt holes to the inside edge of straight edge.

FIGURE 2-3 MEASURING DISTANCE FROM GENERATOR ADAPTER TO DRIVE DISKS, DIMENSION "Y"

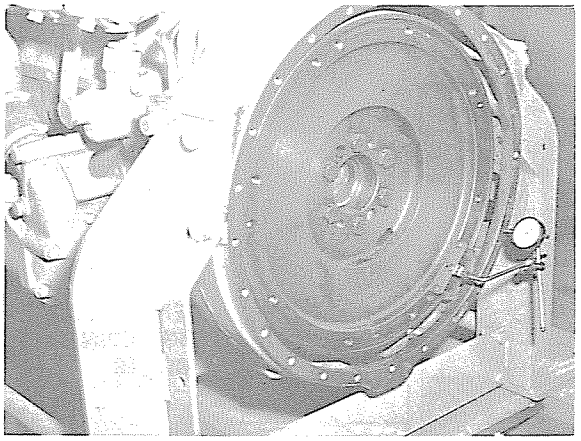

FIGURE 2-4. CHECKING ENGINE FLYWHEEL HOUSING RUNOUT

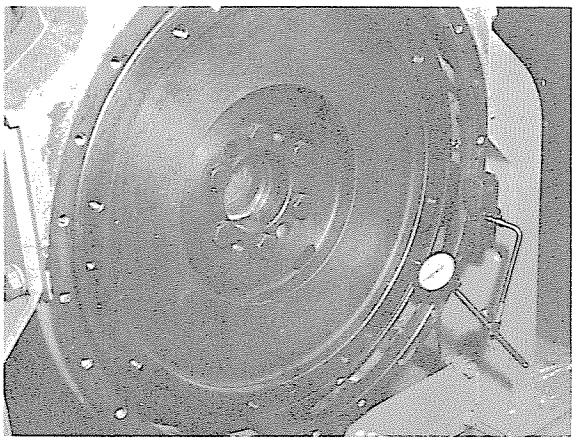

FIGURE 2-5. CHECKING ENGINE FLYWHEEL RUNOUT

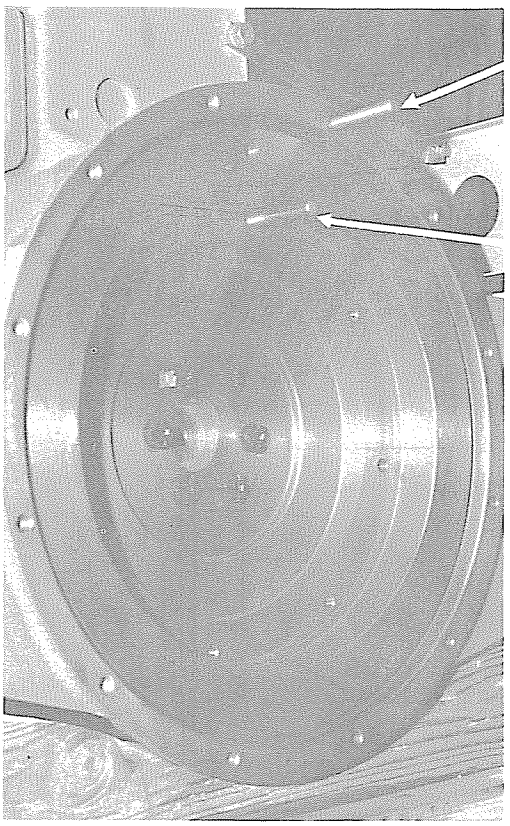

FIGURE 2-6. ALIGNING GENERATOR TO ENGINE WITH PILOT BOLTS

TABLE C

ALLOWABLE FLYWHEEL AND DRIVE DISK RECESS RUNOUT

FLYWHEEL DRIVE DISK RECESS				
Pilot Diameter	Nominal Clutch Dia.		Allowable Run Out (Total Indicator Reading)	
	inches	millimeters	inches	millimeters
6½	8.500	215.900	.002	.0508
7½	9.500	241.300	.002	.0508
8	10.375	263.525	.002	.0508
10	12.375	314.325	.003	.0762
11½	13.375	339.725	.003	.0762
14	18.375	466.725	.004	.1016
16	20.375	517.525	.005	.1270
18	22.500	571.500	.005	.1270
21	26.500	673.100	.006	.1524
24	.28.875	733.425	.007	.1778

FLYWHEEL HOUSING				
SAE Housing Number	Housing Inside Dia.		Allowable Run Out (Total Indicator Reading)	
	inches	millimeter	inches	millimeter
6	10.500	266.700	.002	.0508
5	12.375	314.325	.003	.0762
4	14.250	361.950	.003	.0762
3	16.125	409.575	.004	.1016
2	17.625	447.675	.004	.1016
1	20.125	511.175	.005	.1270
1½	23.000	584.200	.005	.1270
0	25.500	647.700	.006	.1524
00	31.000	787.400	.007	.1778

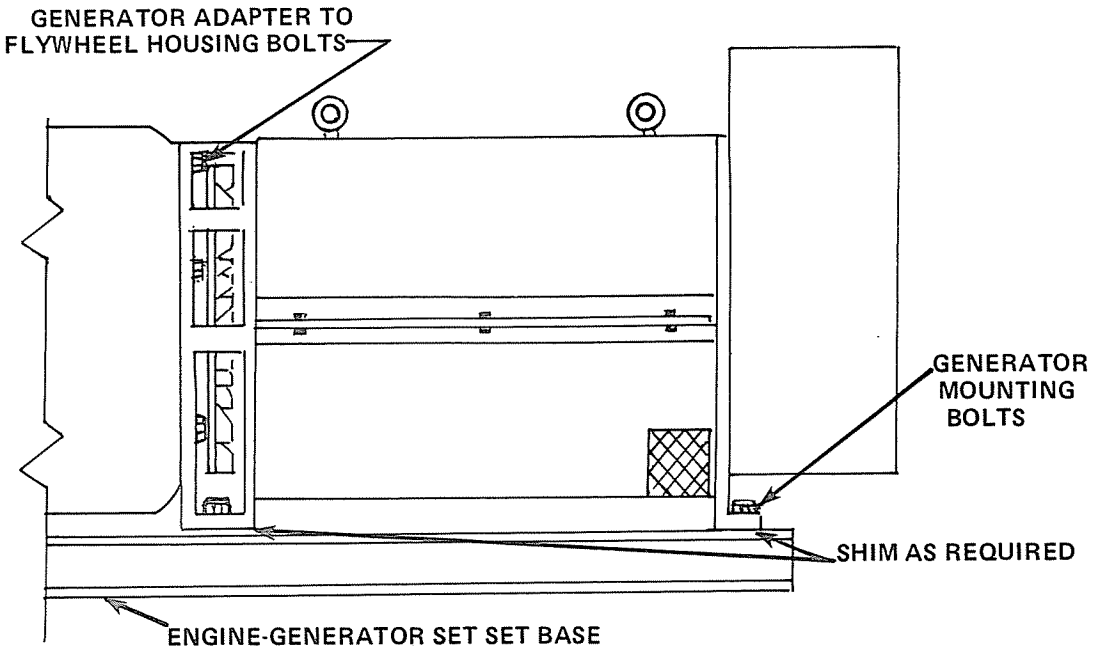

NOTE: MAKE CERTAIN BOLTS DO NOT BOTTOM OUT IN THE FLYWHEEL LEAVING DRIVE DISKS LOOSE IN THE FLYWHEEL.

FIGURE 2-7 MOUNTING GENERATOR TO BASE

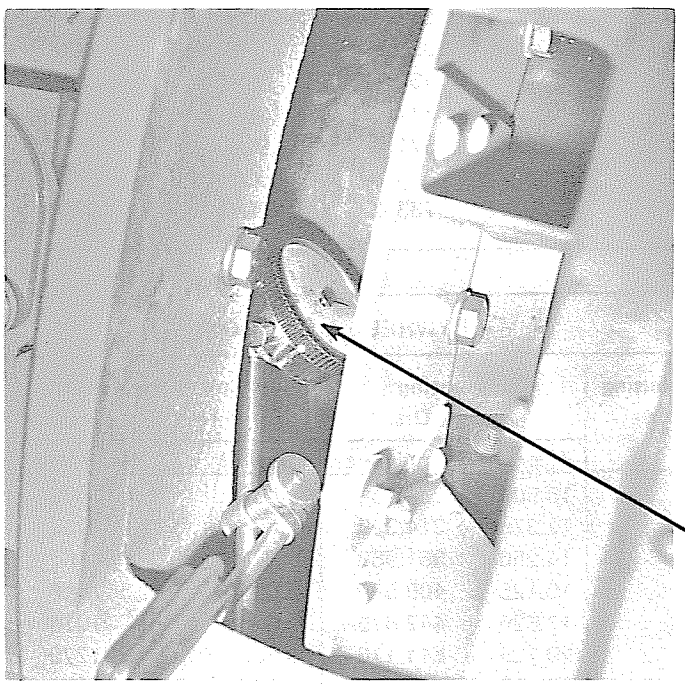

FIGURE 2-8 CHECKING GENERATOR SHAFT RUNOUT

NOTE: USE SPACERS ONLY SHOULD INSUFFICIENT CLEARANCE NOT PERMIT TIGHTENING BOLTS

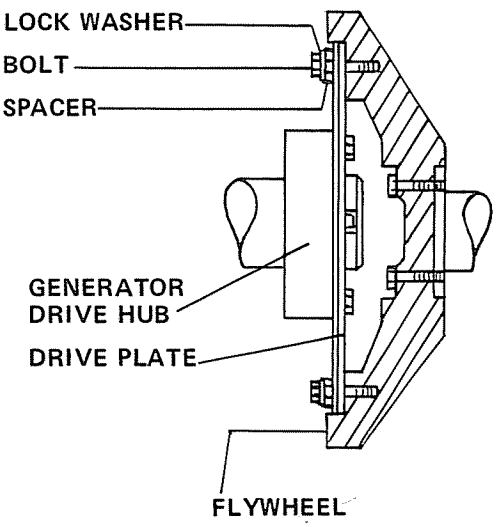

FIGURE 2-9 CROSS-SECTIONAL VIEW - DRIVE DISKS AND FLYWHEEL

2.7 SELECTION OF DRIVES FOR TWO BEARING GENERATORS

2.7.1 Satisfactory generator operation will depend upon careful selection of drive couplings. In general, solid couplings are not recommended except when the generator and prime mover frames are directly connected and belt drives should not be used when belt speed exceeds 5000 feet per minute or 1524 meters per minute.

2.8 BELT DRIVES - GENERAL INFORMATION

2.8.1 Proper alignment and tightness of belt drives is essential. Improper alignment and belt tightness will increase belt wear as well as increase bearing loads and vibration. Select belt drive in accordance with belt manufacturer's specifications. Make certain generator and prime mover are rigidly mounted.

2.9 V - BELT

2.9.1 Use only matched belt sets and avoid minimum pitch sheaves and belts. Follow the V-belt manufacturer's specifications or NEMA limits for sheave pitch.

2.9.2 Make certain the shaft axis of the prime mover and generator are parallel. Belts must enter and leave sheaves with no side bending. Tighten just enough to prevent slippage at full load. Never grease or use belt dressing on belts.

2.10 FLAT BELT

2.10.1 Selection of belts and pulleys of ample width will reduce amount of tension required to prevent slippage at full load. Lower belt tension reduces bearing loads and belt wear.

2.10.2 Position the pulleys so crowns are in the same plane. Make certain motors and generator shafts are paralleled. Observe belt manufacturer's or NEMA limits for pulley sizes.

2.11 GEAR BELTS (TIMING BELTS)

2.11.1 In general, installation of gearbelts will be the same as for flat belts. The following precautions should be taken when installing a gearbelt drive:

a. Gearbelts should be installed with snug fit, neither too tight or too loose. High initial tension is not necessary but when torque is unusually high a loose belt may "jump grooves". If the belt "jumps the grooves" the tension should be increased gradually until satisfactory operation is attained.

b. Be sure that shafts are parallel and pulleys are in alignment. On a long center drive, because of the tendency of the belt to run against one flange, it is sometimes advisable to offset the driven pulley to compensate.

c. On a long center drive, it is imperative that belt sag is not enough to permit teeth in the slack side to engage the teeth at the tight side.

d. It is important that both prime mover and generator are mounted rigidly to prevent variation in belt tension.

e. Although belt tension requires little attention after initial installation, provision should be made for some center distance adjustment for ease in installing and removing belt. Do not force belt over flange of pulley.

2.12 GEAR AND FLEXIBLE COUPLINGS - GENERAL INFORMATION

2.12.1 When drives of these types are used instead of belt drives the prime mover and generator shafts must be carefully aligned and following alignment, the motor and generator must be firmly mounted to a rigid base to prevent misalignment of the unit shafts during operation. Excessive misalignment may be the cause of vibration, noisy operation, excessive coupling or gear wear or premature bearing failure.

2.13 GEAR DRIVE

2.13.1 Accurate alignment and rigid mounting are essential for satisfactory operation with gear drives. Pitch diameter and width should not be outside recommended NEMA limits. Avoid use of couplings which will impose excessive thrust on bearings.

2.13.2 In all cases, gear teeth must be centered with each other. Gear faces must be parallel and correct shaft center distance maintained. Avoid engagement of teeth so deep that they will bind or deflect. Refer to National Gear Manufactures Association specifications.

2.13.3 Test for proper alignment by rotating shafts by hand. Check for backlash through at least one revolution of the shafts. Check backlash and gear face parallelism after tightening mounting bolts. Install or remove shims from under mounting feet to bring gear faces parallel.

2.14 INSTALLATION AND ALIGNMENT OF FLEXIBLE COUPLED DRIVES

2.14.1 The procedures outlined are for aligning flexible coupled drives. Follow the tolerances specified by the coupling manufacturer if they are less than described in this manual.

2.14.2 Install coupling hubs on generator and drive shafts in accordance with the installation procedures supplied by the manufacturer of the coupling. Then check for angular misalignment by scribing a reference mark on the coupling hub at the button or finger of the indicator to mark its position on the hub. Rotate both shafts simultaneously, keeping the finger or button of the indicator at the reference marks on the coupling hub. Note the reading on the indicator dial at each one-quarter revolution. Refer to figure 2-10 for test setup.

ANGULAR MISALIGNMENT OF THE SHAFTS MUST NOT EXCEED .001 INCH FOR EACH INCH (0.01 MILLIMETER FOR EACH CENTIMETER) OF RADIUS OF THE COUPLING HUB TOTAL INDICATOR READING.

2.14.3 If angular misalignment is excessive, loosen motor and generator mounting bolts and place slotted shims under motor and generator mounting pads, as necessary, to correct alignment. Re-check alignment. Install or remove shims from under the mounting pads until aligned.

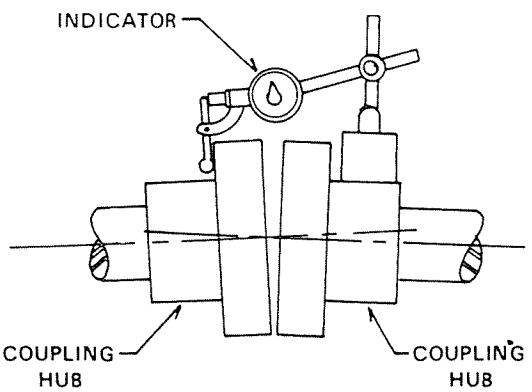

FIGURE 2-10. TESTING ANGULAR ALIGNMENT OF MOTOR AND GENERATOR SHAFTS

NOTE: If the motor generator set is moved to a new location, make test setup with coupling installed as shown in figure 2-11 and then rotate shafts and check alignment as described in paragraph 2.14.2.

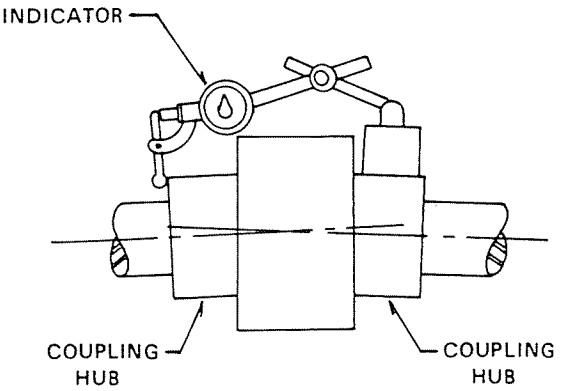

FIGURE 2-11 TESTING ANGULAR ALIGNMENT OF MOTOR & GENERATOR SHAFTS FOLLOWING COUPLING INSTALLATION

2.14.4 Check for parallel shaft (run-out) alignment by scribing a reference mark on the ground or machine diameter of the coupling hub at the finger or button of the indicator. Rotate both shafts simultaneously, keeping the button or finger of the indicator at the reference mark on the hub. Note the reading on the indicator dial at each one-quarter revolution. Refer to figure 2-12 for test setup.

TOTAL RUN-OUT BETWEEN HUBS SHOULD NOT EXCEED .002 OF AN INCH OR .0508 MILLIMETER.

2.14.5 When run-out between hubs is excessive, install or remove shims from under each of the motor or generator mounting pads; then re-check alignment. Add or remove shims until shafts are parallel. Tighten motor and generator mounting bolts following angular and run-out alignment. Check base mounting bolts for tightness. Re-check alignment before operating unit.

NOTE: If the motor generator set is moved to a new location check for parallel alignment by making test setup as shown in figure 2-13 and then rotate shafts and check alignment as described in paragraph 2.14.4.

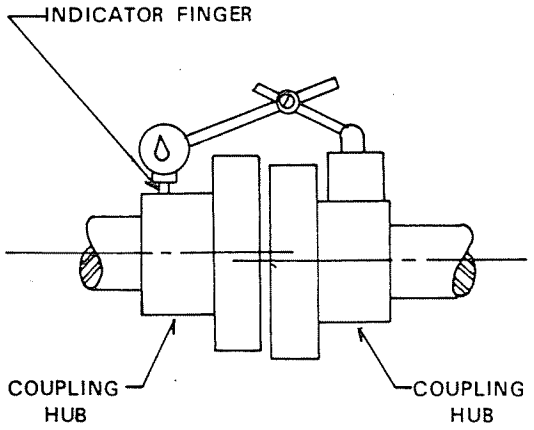

FIGURE 2-12. TESTING PARALLEL ALIGNMENT OF MOTOR AND GENERATOR SHAFTS

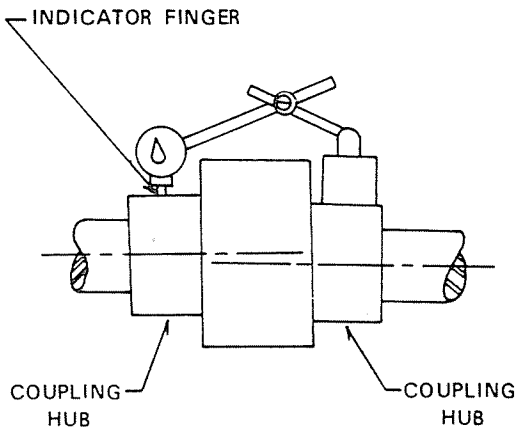

FIGURE 2-13. TESTING PARALLEL ALIGNMENT OF MOTOR AND GENERATOR SHAFTS FOLLOWING COUPLING INSTALLATION

2.15 VIBRATION

2.15.1 After alignment of motor generator set has been completed, run unit at no load and check for excessive vibration (See Operation Instructions, Section 3). If vibration is excessive loosen one motor mounting bolt slightly and if vibration decreases, add shims until retightening of bolt reduces or eliminates vibration. Repeat in turn for all motor mounting bolts.

2.15.2 When vibration and alignment of motor are within limits, run motor generator set at low load and check again for vibration. If excessive, add shims under generator mounting pads in same manner as for the motor. Re-check alignment after any change in shims to control vibration.

2.16 DOWELING

2.16.1 Doweling generator sets will prevent movement of the units during operation should the mounting bolts loosen slightly. Install dowels as follows:

a. Check the alignment after the generator set has been in operation about 40 hours. Correct alignment if not satisfactory (refer to preceding paragraphs).

b. Through opposite generator pads drill holes through and into the base. Holes should have a diameter slightly smaller than the dowel pin.

c. Ream the holes to the proper diameter for the pins, clean out chips and then install pins.

d. Repeat procedure for doweling of motor.

NOTE: Dowel prime movers (engine or motor) manufactured by others than Kato Engineering Company in accordance with the instructions supplied by the manufacturer of the prime mover.

2.17 PROTECTIVE DEVICES

2.17.1 Engine driven sets must be protected with adequate engine governors and against excessive overspeed. Refer to National Electrical Code and local electrical codes for minimum electrical requirements for the generator set. The output to the load of the KAMAG generator should always be protected with an overload protection device - circuit breaker or fuses.

2.18 ELECTRICAL CONNECTIONS

2.18.1 Before connecting the generator to the electrical power load, check nameplate for the electrical characteristics and connect the generator exactly as shown in the connection diagrams. Refer to National Electrical Code or applicable local regulations for minimum specifications for wire size, conduit and protective devices.

2.18.2 Connection Diagrams for KAMAG 14 generators are shown on figures 2-15 through 2-21. Table D shows voltages for the various connections.

2.18.3 When connecting for different voltage than the factory connection, the following connections may be left connected:

1. Leave exciter field leads F1 and F2 connected to F+ and F-.

2. Leave voltage adjust potentiometer R18 connected to terminals 7 and 8 on the voltage regulator.

3. If the unit has a separate boost transformer leave leads E and F connected.

When reconnecting for a different voltage, remove insulating tape and break connections. Reconnect as shown on appropriate drawing. Make sure all connections are securely tightened. Table D and Figures 2-15 through 2-21 show the various single and three phase connections.

CAUTION

LOOSE CONNECTIONS IN THE TERMINAL BOX CAN RESULT IN SERIOUS DAMAGE TO THE KAMAG GENERATOR AND THE EXTERNAL LOAD.

AFTER THE KAMAG GENERATOR IS RECONNECTED AND THE CONNECTIONS ARE DOUBLE CHECKED, RETAPE ALL CONNECTIONS WITH A HIGH GRADE ELECTRICAL INSULATING TAPE. ALWAYS USE NEW TAPE, DO NOT REUSE TAPE REMOVED FROM OLD CONNECTIONS.

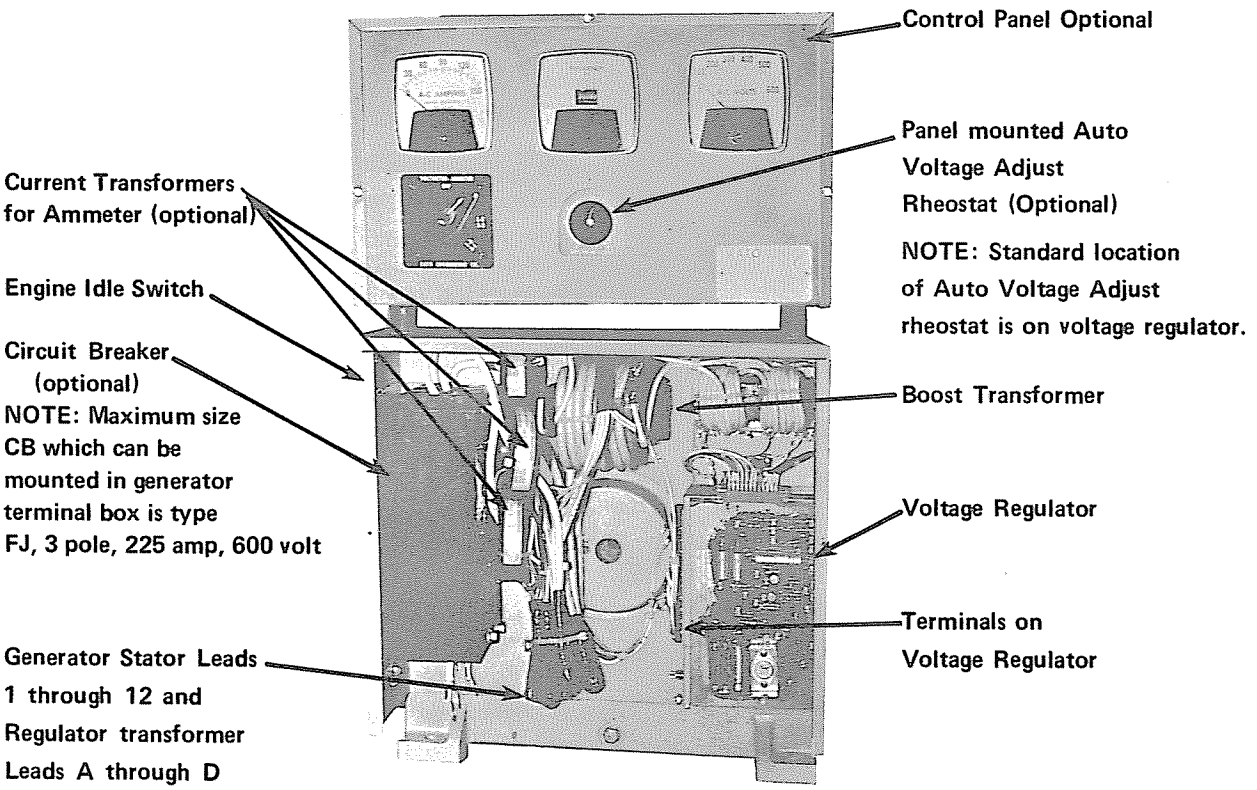

FIGURE 2-14 KAMAG 14 TERMINAL BOX AND OPTIONAL CONTROL PANEL

TABLE D
GENERATOR CONNECTIONS and OUTPUT VOLTAGES

FIGURE & PAGE NO.	CONNECTION	VOLTAGE RANGE AT 60 HZ., 1800 RPM	VOLTAGE RANGE AT 50 HZ., 1500 RPM
Figure 2-16 Page 2-12	Three Phase, Three Wire Parallel Delta	120 VAC to 139 VAC	100 VAC to 115 VAC
Figure 2-17 Page 2-12	Three Phase, Three Wire Series Delta	240 VAC to 277 VAC	200 VAC to 230 VAC
Figure 2-18 Page 2-13	Three Phase, Four Wire Parallel Wye	120/208 VAC to 139/240 VAC	100/173 VAC to 115/200 VAC
Figure 2-19 Page 2-13	Three Phase, Four Wire Series Wye	240/416 VAC to 277/480 VAC	200/346 VAC to 230/400 VAC
Figure 2-20 Page 2-14	Single Phase, Three Wire	115/230 VAC to 130/277 VAC	100/200 VAC 115/230 VAC
Figure 2-20 Page 2-14	Single Phase, Two Wire	230 VAC to 277 VAC	200 VAC to 230 VAC
Figure 2-21 Page 2-14	Single Phase, Two Wire	115 VAC to 139 VAC	100 VAC to 115 VAC

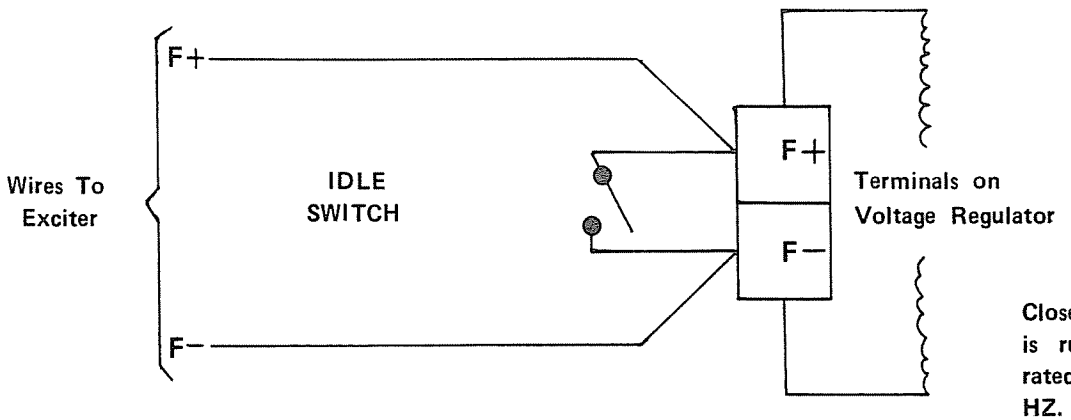

NOTE

Close switch when generator is running lower than the rated speed of 1800 RPM, 60 HZ. or 1500 RPM, 50 HZ.

Open Idle Switch when unit is at rated speed, check voltmeter reading for correct generator output voltage and then close output circuit breaker and apply load.

FIGURE 2-15 ENGINE IDLE SWITCH CONNECTION DIAGRAM
Switch Shown in open (run) position.

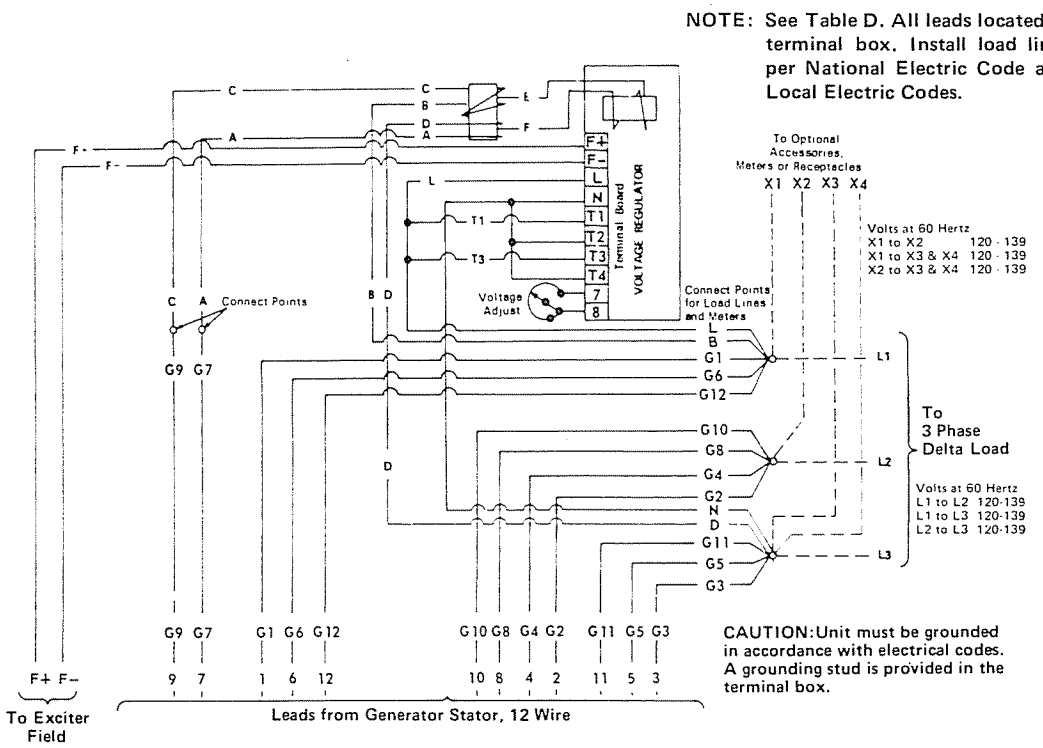

FIGURE 2-16 - ELECTRICAL CONNECTION DIAGRAM, THREE PHASE, THREE WIRE, PARALLEL DELTA

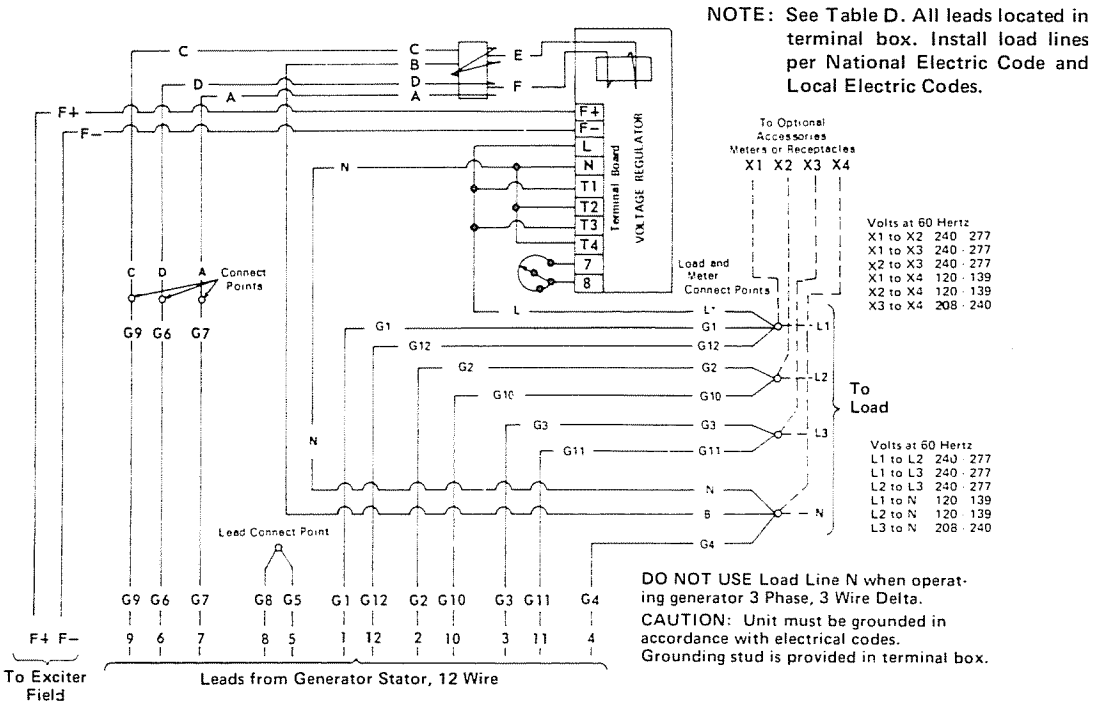

FIGURE 2-17 - ELECTRICAL CONNECTION DIAGRAM, THREE PHASE, THREE WIRE, SERIES DELTA

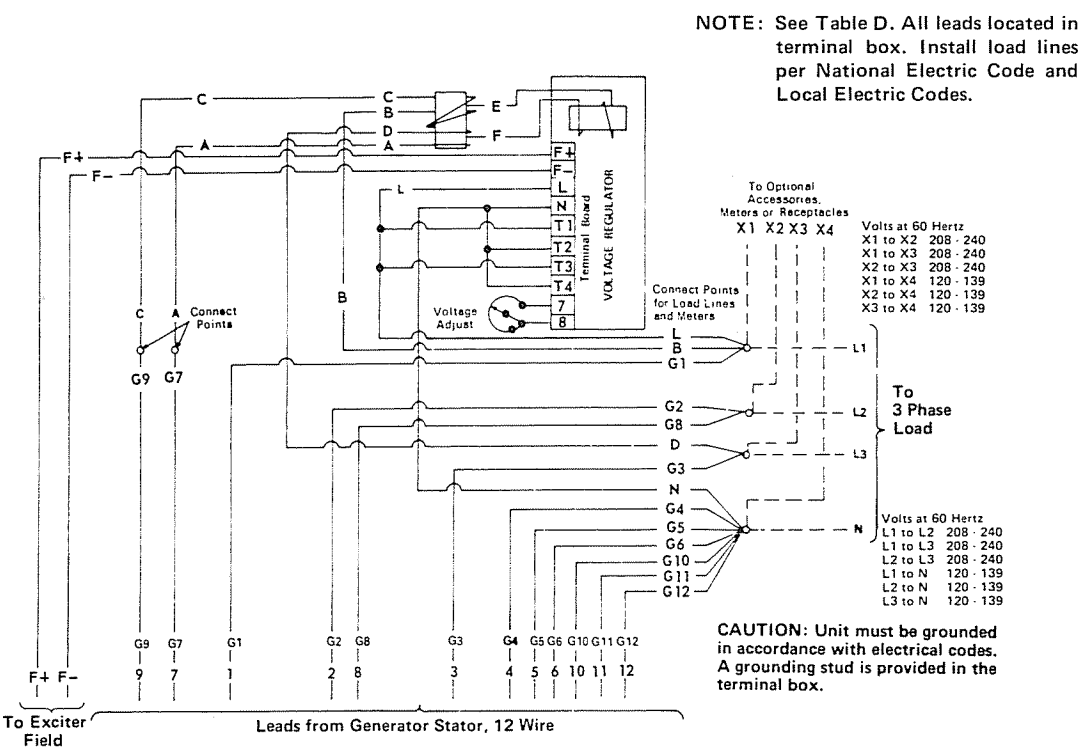

FIGURE 2-18 - ELECTRICAL CONNECTION DIAGRAM, THREE PHASE, FOUR WIRE, PARALLEL WYE

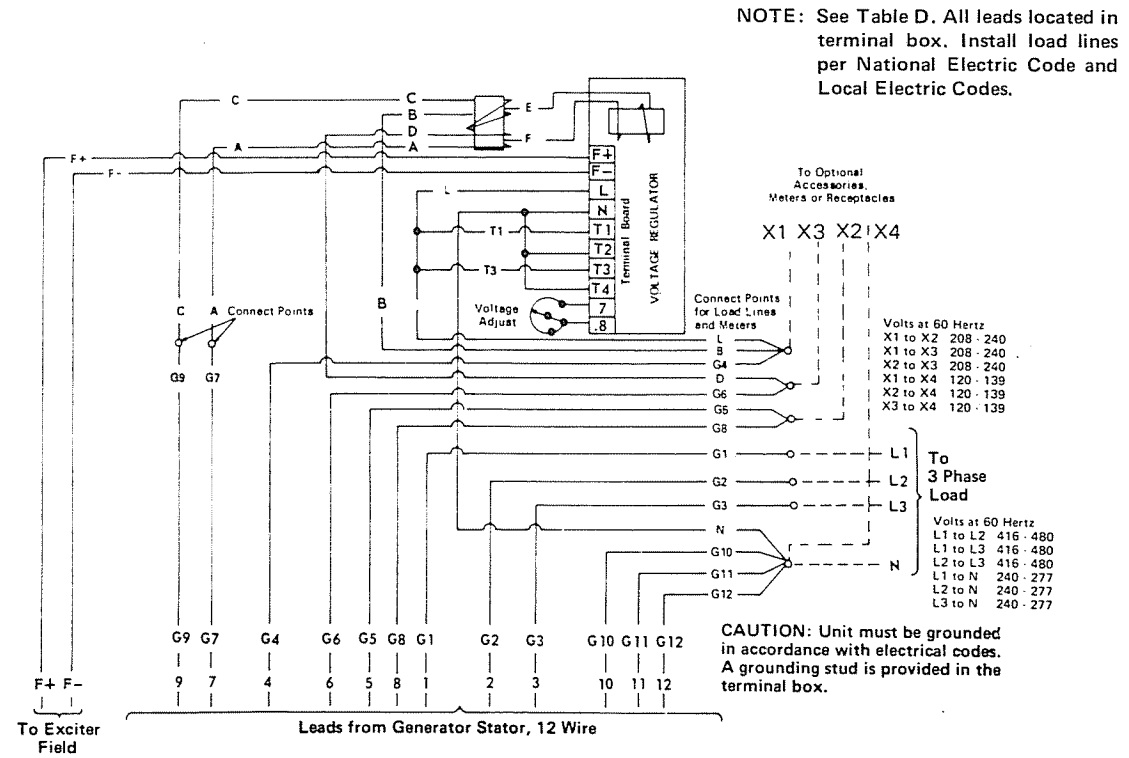

FIGURE 2-19 - ELECTRICAL CONNECTION DIAGRAM, THREE PHASE, FOUR WIRE, SERIES WYE

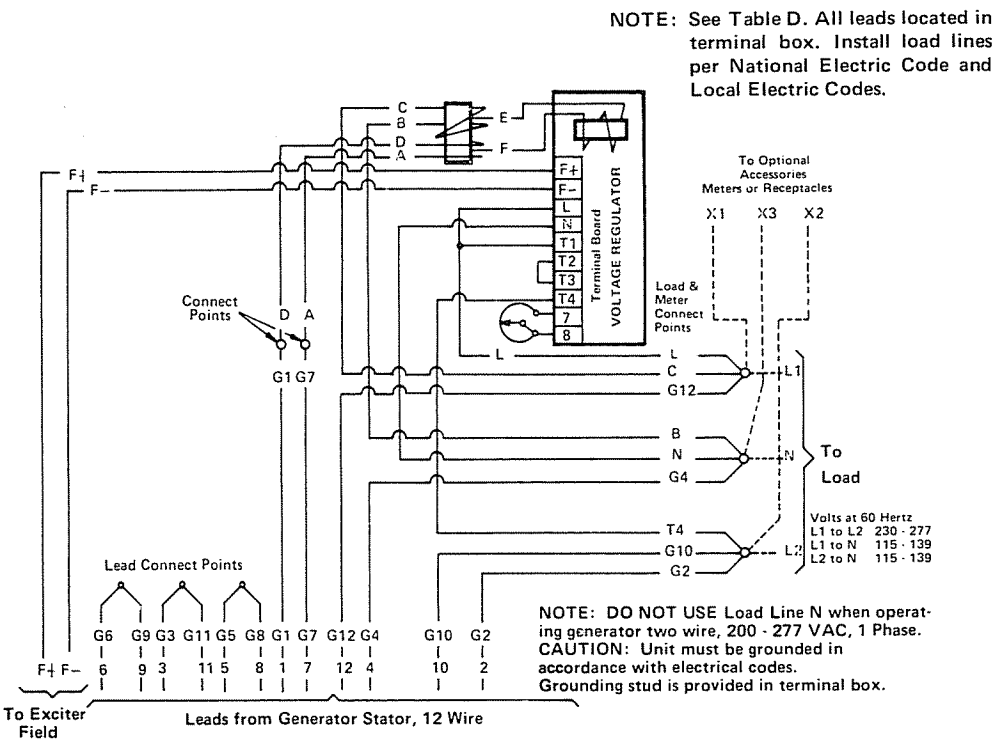

FIGURE 2-20 - ELECTRICAL CONNECTION DIAGRAM, SINGLE PHASE THREE WIRE & SINGLE PHASE TWO WIRE

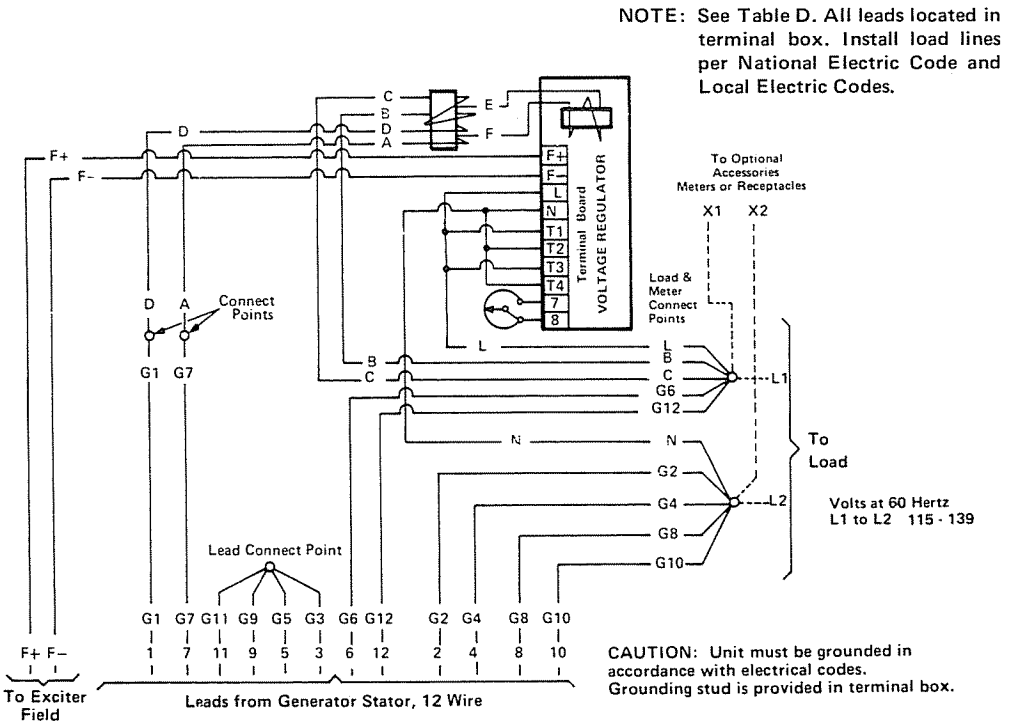

FIGURE 2-21 - ELECTRICAL CONNECTION DIAGRAM, SINGLE PHASE, TWO WIRE

SECTION 3 OPERATION

3.1 PRE-OPERATION EQUIPMENT CHECK

3.1.1 After the KAMAG 14 AC generator is completely installed and wired, but before operating the unit for the first time, perform a check of the equipement as follows:

a. If the generator has been subjected to extreme dampness during shipment or storage it may be necessary to dry out windings before placing the unit in operation. Refer to the procedures for testing winding insulation resistance and the procedures for drying windings described in Section 4 of this manual. Generators placed in operation after being subjected to very low temperatures should be slowly warmed to prevent condensation.

b. Check all interconnecting wiring against the connection diagrams. (See Section 2, Figures 2-15 through 2-21 and Table B). Make certain connections are insulated and taped.

c. Make certain no foreign objects are lodged in the generator. Remove all tools and shop clothes from the vicinity of the equipment.

d. Make certain all covers and guards are installed.

3.2 INITIAL START PROCEDURES FOR THE KAMAG 14 GENERATOR

3.2.1 After installation is complete and the checks listed in paragraph 3.1.1 have been completed, make an initial start and operational checkout of the equipment as listed in the following general instructions:

a. Open the Output Circuit Breaker to disconnect the generator from the load.

b. Turn AUTO VOLTAGE ADJUST potentiometer to maximum resistance (full counter-clockwise).

c. Start the generator set in accordance with the prime mover manufacturer's specifications. Bring up to rated speed.

NOTE: If engine idle switch is used, open switch when generator is at rated speed.

d. Stop generator set. Check rotation as unit slows to stop

e. Again start generator set and bring up to rated speed. Monitoring output voltage with a voltmeter, turn AUTO VOLTAGE ADJUST potentiometer slowly clockwise to obtain desired voltage. See figure 3-2.

NOTE: If desired voltage cannot be obtained by turning the AUTO VOLTAGE ADJUST potentiometer it may be necessary to adjust the VOLTAGE RANGE ADJUST potentiometer. Turning potentiometers clockwise increases voltage by decreasing resistance and turning potentiometers counter-clockwise decreases voltage by increasing resistance.

f. Start and stop generator set several times, observe any unusual conditions such as excessive noise or vibration. Allow sufficient time between starts for cooling.

g. Close Output Circuit Breaker and apply a light load. Adjust AUTO VOLTAGE ADJUST potentiometer to obtain desired output voltage. Slowly increase load to the generator rated power factor fully load value. Adjust AUTO VOLTAGE ADJUST potentiometer as necessary, to obtain desired output voltage.

h. Check voltage regulation. If voltage is not stable or response is slow, adjustment of the Stability Adjust resistor may be necessary. Paragraph 3.9 describes procedures for setting Stability Adjust Resistor R8.

i. During operation, observe the generator at regular intervals so that any abnormal conditions can be corrected before serious damage occurs.

j. With a steady rated power factor full load applied, check current on each line. Use clip-on ammeter if an ammeter is not incorporated in generator set.

k. Check line voltage. On three phase, phase 1 to 2, phase 2 to 3 and phase 1 to 3. On single phase: L1 to L2, L1 to N and L2 to N.

3.3 SINGLE GENERATOR OPERATION INSTRUCTIONS

3.3.1 If generator windings are wet, check winding insulation resistance and dry windings before operating generator. Refer to Section 4, Paragraphs 4.5 and 4.6.

3.3.2 Start and operate the generator set in accordance with the following general instructions:

a. Start the generator set in accordance with the operating instructions supplied by the manufacturer of the prime mover. Operate at rated speed.

NOTE: If engine idle switch is provided, open switch (set to run position) when generator is at rated speed.

b. When the AUTO VOLTAGE ADJUST potentiometer and VOLTAGE RANGE ADJUST potentiometer has been adjusted to provide the desired output voltage, no further adjustment of these devices is required prior to placing the generator set in operation. If previous voltage setting is not known, turn the AUTO VOLTAGE ADJUST potentiometer to midpoint position before placing set in operation. During operation turn AUTO VOLTAGE ADJUST potentiometer to obtain desired output voltage.

NOTE: If desired voltage cannot be obtained, the Voltage Range Adjust potentiometer may need adjustment. Turning potentiometers clockwise increases voltage and when they are turned counter-clockwise voltage will decrease.

c. Check voltage regulation with rated power factor load applied. Refer to procedures outlined in paragraph 3.2.1, if output voltage or voltage regulation is not satisfactory.

d. During operation, observe the generator at regular intervals so that any abnormal conditions can be discovered and corrected.

e. Stop the generator in accordance with the instructions supplied by the manufacturer of the prime mover.

f. When the generator set is operated as a standby unit open the Output Circuit Breaker following shutdown of the generator set.

3.4 OPERATING INSTRUCTIONS FOR PARALLEL OPERATION OF GENERATORS

3.4.1 The KAMAG 14 voltage regulator can be equipped for parallel operation as an option in the factory or by a qualified field representative. With the paralleling option, two or more generators may be paralleled successfully regardless of rating as long as each supplies no more than its full KW load rating. Do not attempt to operate in parallel any KAMAG generators that do not include the paralleling option. Also do not attempt to parallel a KAMAG generator with the commercial power lines.

CAUTION

DO NOT CLOSE THE LOAD CIRCUIT BREAKER OF THE GENERATOR TO BE PARALLELED WITH ONE THAT IS ON THE LINE, UNTIL THE GENERATORS HAVE BEEN CHECKED FOR PROPER PHASE ROTATION AND ADJUSTED FOR SYNCHRONIZATION AS DETAILED IN THE FOLLOWING PARAGRAPHS.

3.5 PHASE ROTATION

3.5.1 Before placing two or more three-phase generators in parallel, make certain the generators have the same phase rotation. This can be accomplished by connecting a three phase induction motor to each of the generators and checking the rotation of the motor. Care must be taken to make certain motor terminals are connected to the corresponding generator or bus terminals for each test. Phase rotation will be the same if the motor rotates in the same direction when connected to either generator.

3.5.2 If the motor rotates in the wrong direction when connected to one of the generators, reverse any two of the three generator leads (except neutral lines). Recheck motor rotation and continue checks until the induction motor rotates in the correct direction.

3.6 SYNCHRONIZING PARALLELED GENERATORS

3.6.1 Do not attempt to parallel generators until each machine has been checked for proper phase rotation and that each generator is adjusted for the required system voltage with the line switch open.

3.6.2 If a synchroscope is not available, generators can be synchronized by using incandescent lamps connected in the load circuit as shown in figure 3-1. Make certain that the total voltage rating of the series lamps equals the voltage rating of the generator.

3.6.3 Synchronize the generators by varying the speed of the incoming generator until fluctuation of the lamps is very slow. When the lamps are dark close the line switch. Care must be taken to close the line switch at the instant the lamps are dark.

WARNING

EXERCISE EXTREME CAUTION WHEN USING THIS METHOD OF SYNCHRONIZING GENERATORS TO AVOID EXPOSURE TO DANGEROUS VOLTAGES.

3.7 DIVISION OF POWER LOAD AMONG PARALLELED GENERATORS

3.7.1 Adjust the engine governors in accordance with the engine manufacturer's instructions. Division of kilowatt or actual power load among generators operating in parallel is practically independent of generator excitation. Do not attempt to vary the amount of kilowatt load among paralleled generators by making adjustments to the voltage regulator.

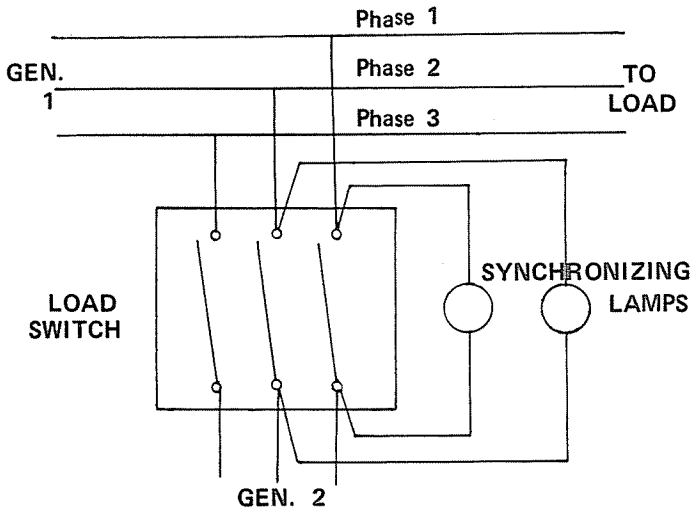

FIGURE 3-1 SYNCHRONIZING PARALLELED GENERATOR USING SYNCHRONIZING LIGHT

3.8 DIVISION OF REACTIVE KVA AMONG PARALLELED GENERATORS

3.8.1 Division of reactive KVA among paralleled generators depends upon generator excitation. Methods of correcting the excitation of individual generators should they take more or less than their share of the reactive KVA are the addition of cross-current compensation or voltage-droop controls to the voltage regulator circuit.

3.8.2 Adjustment of the cross current or voltage droop rheostat would usually be set so that there is just enough resistance in the circuit to give stable operation of the generators under reactive KVA load conditions.

3.8.3 Place generator in operation apply lagging power factor load and check voltage droop. Maximum voltage droop from no load to full load is obtained with full voltage-droop resistance. A droop of 4 to 6% is frequently employed. Adjust each generator to be paralleled for identical droop.

3.8.4 Bring all generators up to correct speed and adjust all output voltage to identical values. Synchronize and parallel generators. Load the paralleled generators and check for satisfactory division of load currents. Correct by adjusting voltage-adjust rheostats and the droop-control resistors.

3.9 STABILITY ADJUST R8

3.9.1 Stability Adjust Resistor R8 is located on the printed circuit board. Only adjust Stability Adjust R8 if during operation instability or slow reponse occurs. Turning Stability Adjust clockwise increases negative feedback, therefore increasing stability. Maximum clockwise setting will, however, result in slower response. Stability Adjust should be set so that the output voltage of the generator is stable at both no-load and full-load and response is satisfactory.

NOTE

Make certain unit is at rated speed when making voltage and stability adjustments (50 or 60 HZ., whichever is being used.

3.10 ENGINE IDLE SWITCH

3.10.1 In applications where generator set is equipped with an engine idle switch for underfrequency protection of the generator, operate switch as follows:

a. Close switch (set to idle position) when generator is operating underspeed, such as engine warm-up at idle speed.

b. Open switch (set to run position) when generator set is brought up to rated speed.

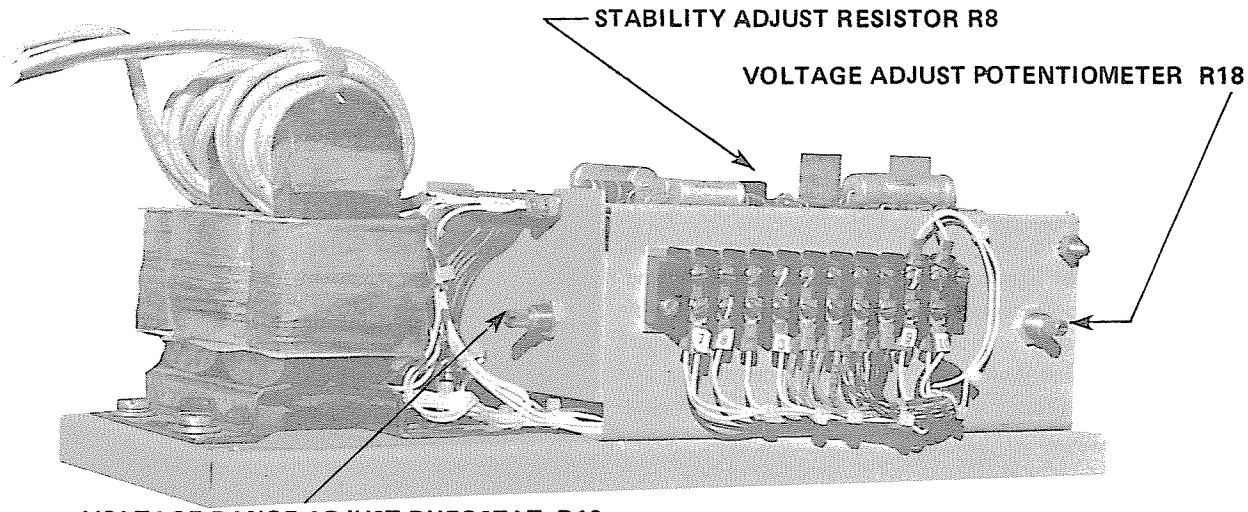

FIGURE 3-2 SIDE VIEW' VOLTAGE REGULATOR

NOTE: When requested, R18 may be remote mounted at location other than regulator chassis.

SECTION 4 MAINTENANCE

4.1 PREVENTIVE MAINTENANCE

4.1.1 Preventive maintenance is the practice of inspecting and cleaning the generator set and eliminating minor disorders before they become serious. A routine regular preventive maintenance program practiced conscientiously will ensure peak performance, lengthen the life of the generator, and eliminate or at least greatly reduce breakdown time.

4.1.2 The preventive maintenance schedule described in Table E enclosed as a guide for establishing a preventive maintenance program for generators operating under standard conditions. The specific operating conditions should be analyzed by the user of the equipment and preventive maintenance program established accordingly. When preventive maintenance inspection determines cleaning is necessary, clean the generator and controls as described in para 4.3.1.

TABLE E

PREVENTIVE MAINTENANCE SCHEDULE
1. Inspect lead wires and control devices wiring for cracked insulation and loose terminals.
2. Inspect control equipment for loose mounting hardware.
3. Inspect control devices for accumulation of dust, moisture and other foreign matter.
4. Clean the outside of the generator assembly and ventilating screens.
5. When dust or moisture is excessive, clean and/or dry the inside of generator assembly.
6. With unit running check control devices and meters for correct adjustment and operation.
7. With unit running observe any unusual noise or vibration. Refer to troubleshooting chart for possible causes of noise and vibration.

4.2 BEARING LUBRICATION INFORMATION

4.2.1 KAMAG 14 generators are equipped with shielded ball bearings. Periodic replenishment of grease is normally not required. Occasional repacking of bearings may be a worthwhile procedure, depending upon generator application. Several years of operation can normally be expected before replacement or repacking bearings becomes necessary. Major overhaul of the generator or prime mover is a good time to inspect bearings and then either replace or repack them depending on their condition.

4.2.2 If bearings are to be repacked, fill approximately ½ full; using a good grade of ball bearing grease which is recommended for electrical motor service. The grease should be capable of retaining satisfactory lubricating qualities to a temperature of +240 degrees fahrenheit or 115.5 degrees centigrade and will also lubricate satisfactorily at the lowest ambient temperature surrounding the generator.

4.3 CLEANING

4.3.1 When inspection determines cleaning is necessary clean the generator and controls as follows:

a. Wipe loose dirt from exterior painted surfaces of generator and the generator controls panel assembly (controller) with a clean cloth. Remove stubborn accumulations of dirt with a detergent or solvent. Clean all ventilating ports with a vacuum cleaner or use filtered compressed air at a pressure of from 25 to 40 psi. or 1.75 to 2.81 KG/CM^2.

b. Clean inside of generator with a vacuum cleaner or use dry filtered compressed air at a pressure of from 25 to 40 psi or 1.75 to 2.81 KG/cm^2. Remove accumulations of grease and dirt from windings with naptha.

WARNING

EXERCISE EXTREME CARE WHEN USING NAPTHA. USE ONLY IN WELL VENTILATED FLAME AND SPARK FREE AREA.

c. Clean electrical contacts such as relay contacts, switch contacts and terminals with an approved contact cleaner. Do not file contacts.

4.4 WINDINGS - PROTECTION

4.4.1 Generators operating intermittently in very damp locations should be protected with space heaters. Generators placed in operation after being subjected to very low temperatures should be slowly warmed to prevent excessive condensation. Winding resistance should be checked before placing the generator in operation if the windings are wet.

4.5 INSULATION RESISTANCE TEST

4.5.1 Winding insulation resistance can be conveniently and safely tested with a hand cranked megger of not over 500 volts. The following formula is an accepted standard for measuring insulation resistance of stator windings. Winding insulation resistance measured at 500 volts DC after one minute should not be less than:

$$\text{Resistance in megohms} = \frac{\text{Rated Voltage of Machine} + 1000}{1000}$$

The above formula is satisfactory for most checks. For more information see "Recommended Practice for Insulation Resistance Testing AC Rotating Machinery". AIEE Standard No. 43.

When megging any generator winding remove all connections to associated components such as the voltage regulator, rectifier bridge, or load.

4.6 DRYING WINDINGS

4.6.1 If the insulation fails to meet the test standards the generator may be dried out by heat from a warm air oven, heat lamps or strip heaters. The temperature should not exceed 150° F or 65.5° C. The generator windings may also be dried by application of internal heat as described in paragraph 4.6.2.

WARNING

WHEN OVEN DRYING, USE A FORCED AIR CIRCULATION OVEN, NOT A RADIANT TYPE. RADIANT OVENS WILL OVERHEAT SOME GENERATOR COMPONENTS BEFORE COMPONENTS FARTHER FROM THE HEAT REACH A SATISFACTORY TEMPERATURE.

4.6.2 Drying the generator winding insulation by the application of internal heat consists of operating the generator as described in the following procedure.

a. Check for excessive accumulation (pockets) of water on generator windings. Dry as much as possible with compressed air before applying internal heat.

b. Remove generator terminal box cover. Disconnect all generator stator leads (1 through 12) from voltage regulator leads and load lines.

c. Connect generator stator leads together, to short circuit the stator windings.

d. In one of the generator leads, insert an ammeter of sufficient size to read full-load generator current.

e. Disconnect exciter field leads from F+ and F− terminals on the voltage regulator and connect a variable source of direct current to the exciter field leads.

f. Operate the generator at normal speed. Supply just enough excitation to cause rated current to flow in the generator stator windings.

g. Operate for sufficient time to ensure thorough drying of the windings. This can be determined by stopping the generator periodically and checking the insulation resistance of the windings. Insulation resistance checks at one-hour intervals are suggested. Terminate the drying-out process when measured resistance is within test standards (paragraph 4.5) and shows little change over a two to four hour period of operation.

4.7 TESTING BRUSHLESS EXCITER ROTATING RECTIFIERS WITH AN OHMMETER.

4.7.1 If a failure of the rectifier is suspected remove the generator cover and test rectifier with an ohmmeter as follows:

a. Unsolder lead from rectifier. Remove rectifier.

b. Refer to figures 4-1 and 4-3, then connect ohmmeter leads across rectifier in one direction and then the other direction. Note meter readings. The meter should indicate a low resistance in one direction and a high resistance in the other direction.

c. If the meter indicates a low resistance in both directions the rectifier is shorted. A high resistance in both directions indicates an open rectifier.

d. Replace defective rectifiers with rectifiers of the same operating characteristics as the original parts. Order by part number and include the model and type of the exciter as well as the generator serial number.

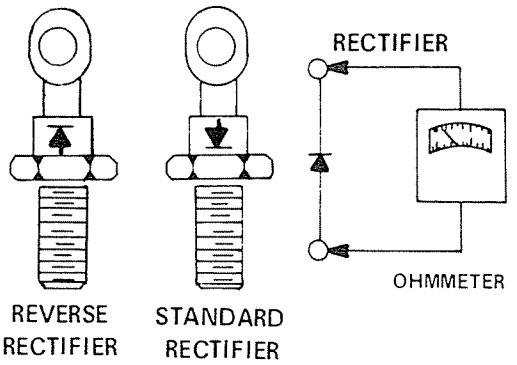

FIGURE 4-1 TESTING ROTATING RECTIFIERS WITH AN OHMMETER

4.8 TESTING BRUSHLESS EXCITER ROTATING RECTIFIRES WITH A TEST LAMP

4.8.1 If an ohmmeter is not available, field rectifiers may be tested with a test lamp consisting of standard flashlight batteries and a flashlight bulb as shown in figure 4-3. Refer to figures 4-2 and 4-4 for identification and then test as follows:

a. Unsolder lead from rectifier. Remove rectifier.

b. Connect leads of tester across rectifier in one dirction then reverse leads. The light should light when the leads are across the rectifiers in one direction and should not light when placed across the rectifier in the other direction.

c. If the light lights in both directions the rectifier is shorted. If the light does not light in either direction the rectifier is open.

4.9 TESTING SURGE PROTECTOR WITH TEST LAMP

4.9.1 Disconnect one lead and check with lamp tester. The lamp should not light when the test leads are placed across the surge protector in either direction. If the lamp lights it indicates a shorted surge protector. Replace defective surge protector with one of the same operating characteristics as the original part. Order by part number and include the serial number of the generator.

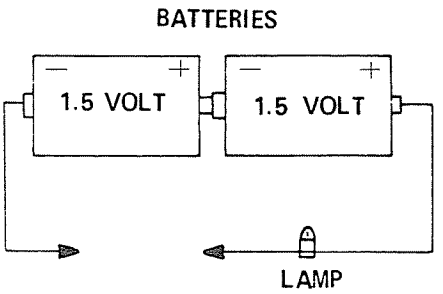

FIGURE 4-2 TEST LAMP

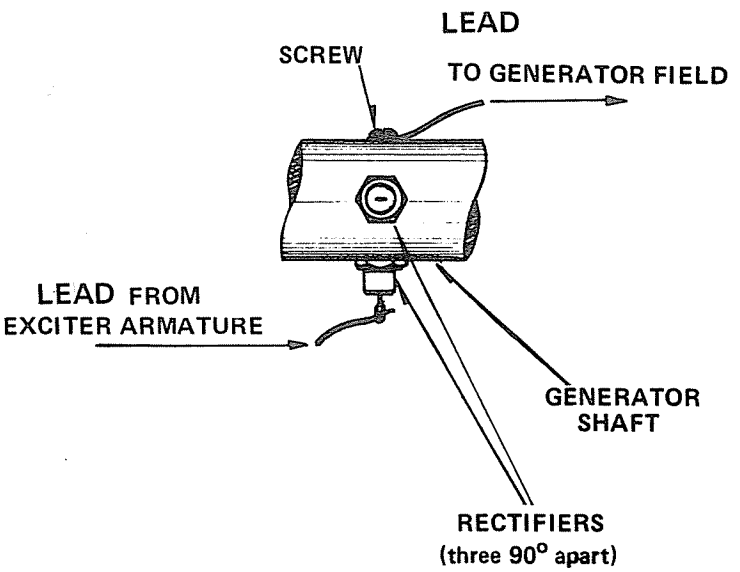

FIGURE 4-3 ROTATING RECTIFIERS

4.10 RESTORING RESIDUAL MAGNETISM

4.10.1 The direct current necessary to magnetize the alternator field is obtained from the exciter. Initially, upon starting the generator, current flow and voltage is induced into the exciter armature by the magnetic lines of force set up by the residual magnetism of the exciter field poles. Residual magnetism of the exciter field poles may be lost or weakened by a momentary reversal of the field connection, a strong neutralizing magnetic field from any source, or if the generator is not operated for a long period of time. To restore the small amount of residual magnetism necessary to begin the voltage buildup, connect a battery of from 6 to 32 volts to the exciter field coil circuit. Normally a battery of 6 to 12 volts is large enough. When the field windings have a high resistance (75-100 ohms) a larger battery voltage may be required. Connect the battery and flash field as follows:

a. Disconnect exciter field coil lead F2 (F+) at terminal F+ on the voltage regulator. Disconnect lead F1 (F-) at terminal F- on the voltage regulator.

b. Connect battery positive lead to field coil lead F2 (F+).

c. Start unit and bring up to rated speed.

d. Flash field by touching battery negative lead to field coil lead F1 (F-). Observe generator voltage buildup.

NOTE: Disconnect battery leads after approximately 3 to 5 seconds. If battery is connected for too long, overheating and subsequent damage to the exciter could occur.

e. Reflash field (steps (a) through (d) if generator output voltage does not buildup.

f. Stop unit and reconnect field coil lead F2 (F+) to terminal F+ on the voltage regulator. Reconnect lead F1 (F-) to terminal F- on the voltage regulator.

NOTE: If the polarity of the exciter is reversed by flashing the field, it may be corrected by interchanging the battery leads.

4.11 TESTING VOLTAGE REGULATOR COMPONENTS

4.11.1 Rectifiers may be tested as described in paragraphs 4.7 or 4.8.

4.11.2 Capacitors may be checked on a capacitor bridge to measure capacitance or leakage. Capacitance should not vary more than 10% of their rated value. An approximate check may be made with an ohmmeter set to a high resistance scale. The meter should initially indicate low resistance and then gradually increase until capacitor is fully charged.

4.11.3 Power Transformer Test - With rated voltage on primary windings, check the secondary voltages. Voltages measured when transformer is unloaded run up to about 10 percent higher than those taken when the transformer is wired into the circuit.

Typical transformer defects are shorts between windings, and shorted turns. These usually may be detected by checking the resistances and voltages. When the transformer overheats, and the existence of shorted turns cannot be proved by resistance measurement, check the no-load alternating current in the primary winding. This excitation current will be excessive if there are shorted turns.

4.11.4 Potentiometers and resistors may be tested with an ohmmeter. Potentiometers and adjustable resistors should be checked over their full range. Care should be taken to avoid damage when setting adjustment bands on adjustable resistors The adjustment band should be loosened until it slides freely on the resistor tube. Typical defects are open or short circuited resistors.

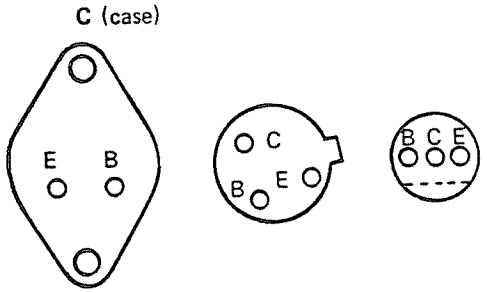

FIGURE 4-4 TRANSISTORS, PHYSICAL ILLUSTRATION BOTTOM VIEW

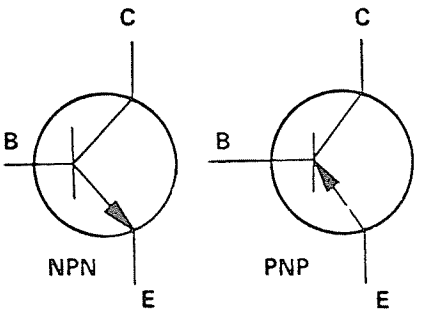

FIGURE 4-5 TRANSISTORS, SCHEMATIC

NOTE: Readings taken with resistors connected in circuit may reflect resistance of circuit rather than just the resistor.

4.11.5 Silicon Transistor Test – The following chart shows the method of testing transistors with a three-volt test lamp. Figures 4-4 and 4-5 are drawings of transistors. The light indications listed on the chart are those which will normally occur when transistor is in good condition - - not open or short circuited.

TABLE F TRANSISTOR TEST CHART

Type Transistor	Tester Positive Lead Connected To	Tester Negative Lead Connected To	Normal Light Indication
NPN	BASE	COLLECTOR	LIGHT
	BASE	EMITTER	LIGHT
	COLLECTOR	BASE	NO LIGHT
	EMITTER	BASE	NO LIGHT
PNP	BASE	COLLECTOR	NO LIGHT
	BASE	EMITTER	NO LIGHT
	COLLECTOR	BASE	LIGHT
	EMITTER	BASE	LIGHT

4.12 REMOVING BEARINGS

4.12.1 Remove the endbell to expose bearing. See "Disassembling Generator". Use a puller to remove the bearing from the shaft. Protect the shaft end with a cap. If bearing is to be used again, make certain puller applies pressure only against the bearing inner race. See figure 4.6.

4.13 INSTALLING BEARINGS

4.13.1 Heat the bearing to 250° F. or 121° C. in a clean temperature controlled circulating air oven. Start the heated bearing onto the shaft. Then use a fiber or soft metal sleeve to tap bearing into place. See figure 4-7. Make certain that pressure is applied only to the bearing inner race. Install bearing to point where inner race is against shoulder on shaft.

4.14 TROUBLESHOOTING

4.14.1 Troubleshooting is the process or recognizing malfunctions of the system, intelligently analyzing the malfunction, and making the necessary corrections to place the unit back into proper operation.

4.14.2 Between all regular preventive maintenance inspection be alert for any signs of generator set trouble. Common symptoms are listed in Table G. Correct any minor trouble immediately. Minor defects left uncorrected can cause serious damage which can result in costly repairs and down time.

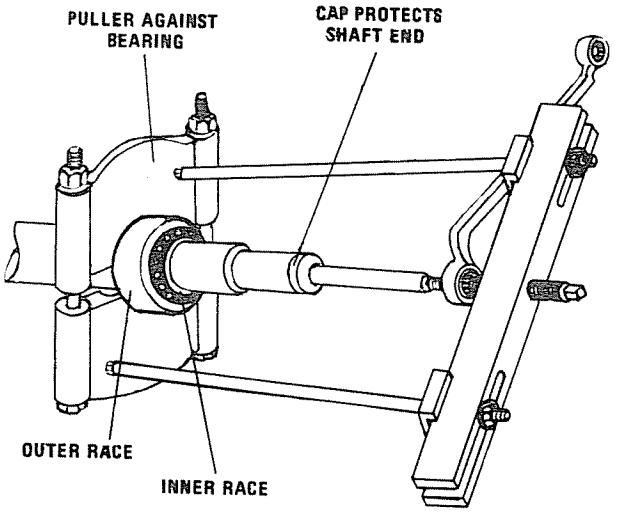

FIGURE 4-6 REMOVING BEARING

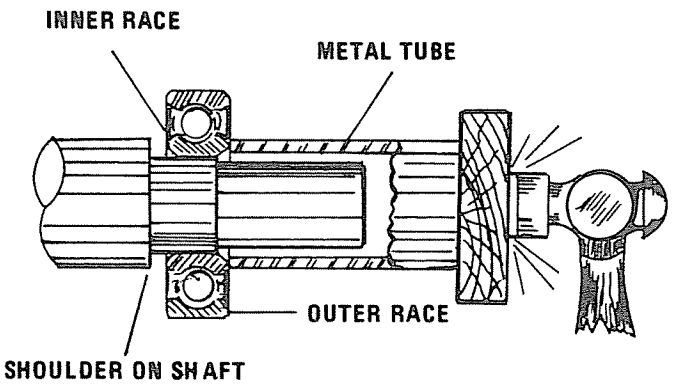

FIGURE 4-7 INSTALLING BEARING

TABLE G
TROUBLESHOOTING CHART

SYMPTOM	POSSIBLE CAUSES	REMEDY
No Voltage	Open circuit breaker of fuses (if voltage is sampled on load side of fuses or circuit breaker). Idle Switch closed.	Check. Reset circuit breaker or replace fuses if open. Open Idle Switch. (See note.)
	Open circuit in exciter field.	Check out continuity of shunt field and leads to voltage control. (Use ohmmeter or wheatstone bridge.) If open in field coils, remove exciter field assembly and return assembly to factory for repair.
	Loss of residual magnetism in the exciter field poles.	Adjust manual adjust potentiometer to full resistance. Flash field by making a flash connection of D.C. across terminals F1 to F2. See "Restoring Residual Magnetism".
	Open Circuit in stator winding	Check for continuity in windings. Return to factory for repair if open.
	Malfunction of automatic voltage regulator.	See trouble shooting of voltage regulator.
	Short Circuited generator output leads.	Clear lead to restore voltage build up.
	Open in rotating rectifiers.	Check rotating rectifiers and replace if open.
	Open in alternator field.	Check for continuity and return rotor to factory for repair if field coils are open.
	Shorted rotating rectifiers.	Check shorts and replace if faulty.
	Shorted exciter armature.	Check for short, if faulty replace.
	Shorted leads between exciter armature and generator field.	Test and repair
Low Voltage	Engine Idle Switch Closed	Open switch. (See note.)
	Improper adjustment of voltage adjust rheostat or range adjust rheostat	Adjust Rheostats. Refer to Section 3 "Operating Procedures."
	Excessive Load	Reduce load. With 3 wire, single phase and 4 wire, three phase generators, the load on each leg should be as evenly balanced as possible and should not exceed the rated current on any leg.
	Line loss.	Increase size of line wire.
	High resistance connection. Connections will be warm.	Make better connections.
	Shorted field.	Test field coils for possible short by checking resistance with an ohmmeter or resistance bridge. Return rotor assembly to factory for repair if alternator field coils are shorted.

NOTE: If idle switch is left closed, output voltage may be low or no output depending on amount of exciter field residual magnetism.

TABLE G cont.

SYMPTOM	POSSIBLE CAUSES	REMEDY
Low Voltage (Cont.)	Low Power factor.	Reduce inductive (motor) load. Some AC motors draw approximately the same current regardless of load. Do not use motors of larger horsepower rating than is necessary to carry the mechanical load.
	Weak field due to operating in warm temperature.	Improve the ventilation of generator. Field .current can be increased providing the generator temperature rating stamped on the nameplate is not exceeded.
	Improper voltage and/or frequency to drive motor causing low speed.	Check input voltage. Correct deficiencies. Check motor data plate for nominal operating values.
	Low speed due to improper belt adjustment on belt driven motor generator sets.	Align and adjust belt. Replace if worn excessively. Check for proper sheave size.
	Improper speed of engine driven generator set due to defective governor, ignition system, or carburetor.	Check and correct deficiencies.
Fluctuating Voltage	Voltage regulator not operating properly (if used).	Check regulator. Replace if defective.
	Prime mover speed fluctuating.	Check frequency and voltage of incoming power when generator set is motor driven. Engine governor on engine driven generator sets.
	Loose terminal or load connections.	Make better connections.
	Generator overloaded.	Reduce load to rated value.
	DC excitation voltage fluctuating.	Trace DC excitation circuit. Correct any defects.
High Voltage	Overspeed.	Correct speed of prime mover.
	Improper connection of generator.	Reconnect generator. See 1.8, generator connection diagrams.
	Improper adjustment of voltage adjust rheostat or range adjust rheostat	Adjust rheostats. Refer to Section 3 Operating Procedures.
Overheating	Clogged ventilating screens and air passages.	Clean all screens and air passages.
	Dry or defective bearings.	Lubricate dry bearings. Replace defective bearings.
	Coupling misaligned or on belt driven generators, belt too tight.	Align generator set or adjust belt.
	Generator field coils shorted or grounded.	Test field coils for shorts. Replace shorted rotor or return to factory for repair.

TABLE G cont.

SYMPTOM	POSSIBLE CAUSES	REMEDY
Vibration	Defective or dry bearing	Lubricate dry bearings. Replace defective bearings.
	Misalignment of generator and prime mover.	Align generator set.
	Generator not properly mounted.	Check mounting. Correct defective mounting.
	Transfer of vibration to generator from another source.	Isolate generator set from source of vibration by installing vibration dampeners between the generator set base and foundation.

4.15 TWO BEARING KAMAG 14 GENERATOR DISASSEMBLY INSTRUCTIONS

4.15.1 Refer to figure 4-8 and Table H for illustrated parts breakdown. Remove generator to prime mover coupling and then disassemble generator as follows:

1) Remove bolts holding endbells (3) and (17) to base. Remove generator from base.

2) Remove eyebolts (14) and bolts and nuts (15) and (16). Remove wrapper cover (13) from generator.

3) Remove terminal box cover and disconnect generator output leads and also field lead F- and F+. Remove any clips securing generator field leads to the generator frame (11).

4) Remove Drive endbell bolts (18) and washers (19) from drive endbell (17). Pull endbell from generator.

5) Remove bolts (21) and washers (22) from fan (20). Remove fan. During assembly, position fan about 1/2 inch from baffle (12).

6) Remove bolts (1) and washers (2) from endbell (3). Pull endbell from generator.

7) If exciter field windings (4) require replacement, remove bolts (5) and washers (6) that secure the exciter field to endbell (3). During assembly, install exciter field assembly with leads toward endbell.

8) Remove rotor assembly (10) from frame and stator assembly (11).

9) If rectifiers (9) require replacement, unsolder lead and then remove rectifier.

10) When replacing bearings (7) or (23), refer to procedures outlined in paragraphs 4.12 and 4.13.

4.16 SINGLE BEARING KAMAG 14 GENERATOR DISASSEMBLY INSTRUCTIONS

4.16.1 Refer to figure 4-9 and Table I for illustrated parts breakdown. Remove generator from engine mounting bolts and then disassemble generator as follows:

1) Remove bolts holding endbell (3) and adapter (17) to base. Remove generator from base

2) Remove eyebolt (14) and bolts and nuts (15) and (16). Remove wrapper cover (13).

3) Remove terminal box cover and disconnect generator output leads and also field leads F- and F+. Remove any clips securing field leads to the generator frame (11).

4) Remove endbell bolts (1) and washers (2) from endbell (3). Pull endbell from generator.

5) Remove rotor assembly (10) from drive end of generator frame (11).

6) If exciter field (4) requires replacement, remove bolts (5) and washers (6) then remove field from endbell (3). During assembly install exciter field with leads toward endbell.

7) Remove fan (20) from rotor by removing fan bolts (21) and washers (22). When unit is assembled, position fan about ½ inch from baffle (12).

8) If rotating rectifiers (9) require replacement, unsolder lead wire and then remove rectifiers.

9) When replacing bearing (7), refer to the procedures outlined in paragraph 4.12 and 4.13.

TABLE H

PART DESCRIPTION TABLE FOR FIGURE 4-8 - TWO BEARINGS KAMAG 14 GENERATORS

KEY	DESCRIPTION	NO. REQUIRED
1	BOLT, retaining exciter endbell	4
2	WASHER, spring lock	4
3	ENDBELL, exciter end	1
4	EXCITER FIELD ASSEMBLY	1
5	BOLT, exciter field mounting	4
6	WASHER, spring lock	4
7	BEARING, exciter end	1
8	SCREW, generator field lead connection	1
9	RECTIFIER	3
10	ROTOR ASSEMBLY	1
11	FRAME AND STATOR ASSEMBLY	1
12	AIR BAFFLE	1
13	GENERATOR WRAPPER COVER	1
14	LIFTING EYEBOLT	2
15	SCREW, round head	3
16	NUT, hex head	3
17	ENDBELL, drive end	1
18	BOLT, retaining, drive endbell	4
19	WASHER, spring lock	4
20	FAN	1
21	FAN BOLT	2
22	WASHER	2
23	BEARING, drive end	1

TABLE I

PART DESCRIPTION TABLE FOR FIGURE 4-9 - SINGLE BEARING FLEXIBLE DISK COUPLED

1	BOLT, retaining, endbell	4
2	WASHER, spring lock	4
3	ENDBELL, exciter end	1
4	EXCITER FIELD	1
5	BOLT, exciter, field mounting	4
6	WASHER, spring lock	4
7	BEARING, exciter end	1
8	SCREW, generator field lead connection	1
9	RECTIFIER	3
10	ROTOR ASSEMBLY	1
11	FRAME AND STATOR ASSEMBLY	1
12	AIR BAFFLE	1
13	GENERATOR WRAPPER COVER	1
14	LIFTING EYEBOLT	2
15	SCREW, round head	3
16	NUT, hex head	3
17	ADAPTOR	1
18	BOLT, adapter retaining	4
19	WASHER, spring lock	4
20	FAN ASSEMBLY	1
21	BOLT, hex head	2
22	WASHER, spring lock	2
23	COUPLING HUB	1
24	SPACERS	2*
25	DRIVE DISKS	2*
26	WASHERS, spring lock	8
27	BOLT, drive disk retaining	8
28	KEY, drive hub retaining	1

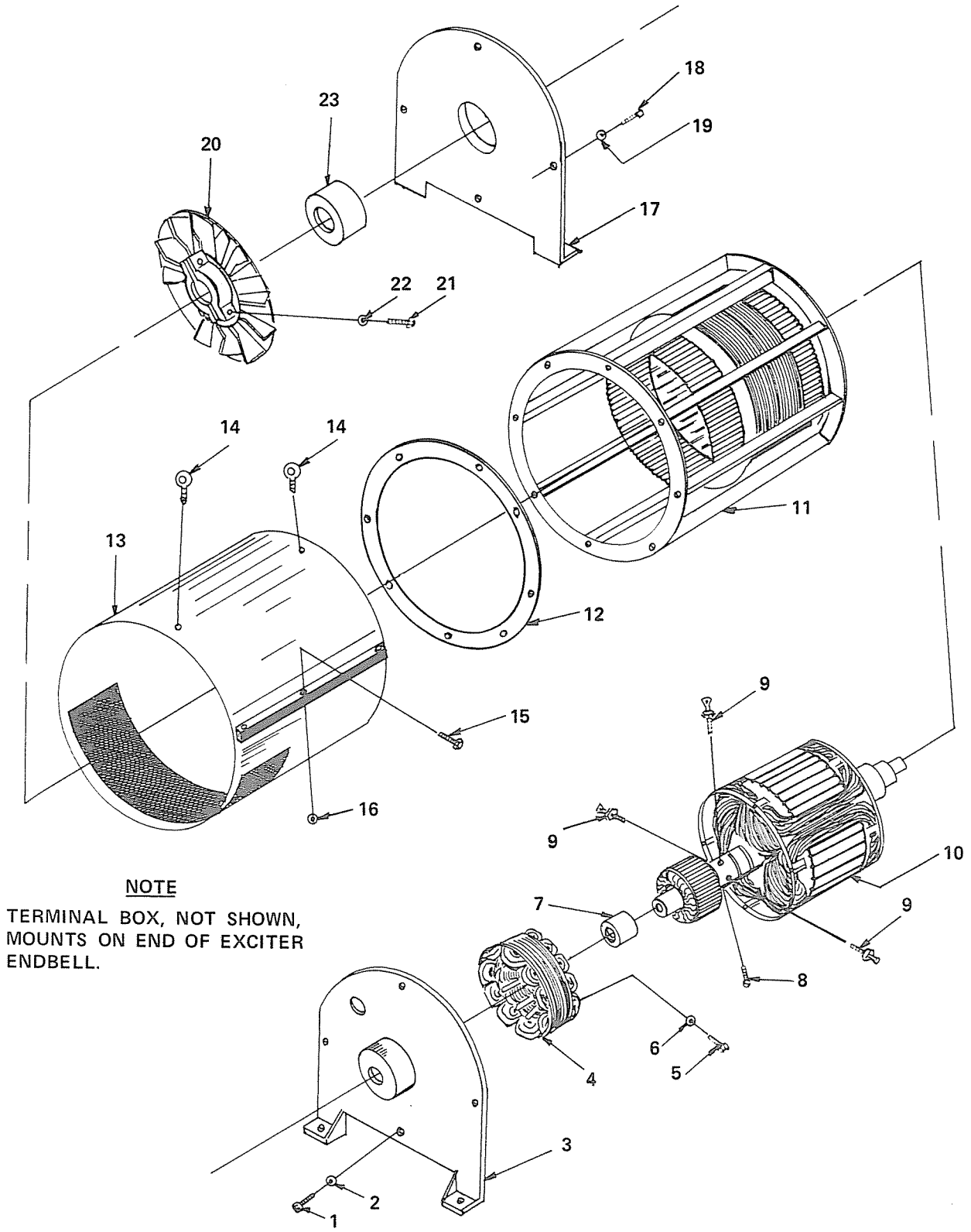

FIGURE 4-8 EXPLODED VIEW DRAWING, TWO BEARING KAMAG 14 GENERATOR

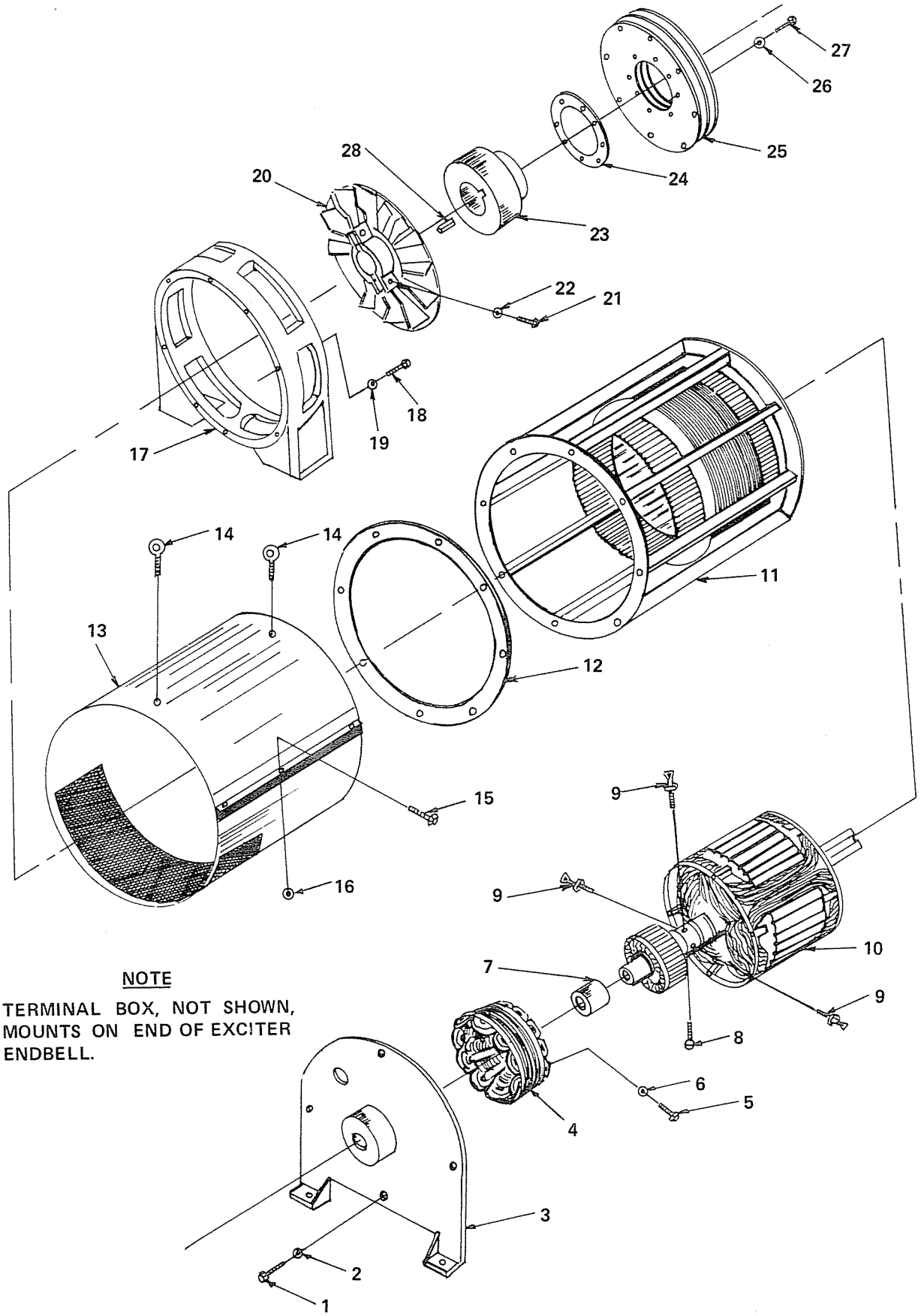

FIGURE 4-9 EXPLODED VIEW DRAWING, SINGLE BEARING KAMAG 14 GENERATOR

KATO Engineering
SUBSIDIARY OF RELIANCE ELECTRIC
P.O. Box 47 Mankato, Minnesota 56001 Phone: (507) 625-4011 Telex: 29-0786

KAMAG - 18

Stock Generators - Characteristics

Winding Resistance - Corrected to 25 Deg C

Temperature rise: 80
Ambient Temperature: 40

Generator Code	Hertz 50/60	Gen KW	Gen KVA	Volts VC	Amps L-L	Stator L-L	Main Field	Exciter Field	Reactances: Synchronous Reactance Direct Axis XD	Transient Reactance Saturated X'D	Subtransient Reactance Direct Axis X"D	Negative Sequence Reactance X2	Zero Sequence Reactance X0	Leakage Reactance XL	Time Constants: Field Circuit with Armature Circuit Open TD'0	Field Circuit with Armature Circuit Shorted TD'	Armature Circuit Asymmetrical Short Circuit TA
80AVR3 4P2-0600	50 60	50.0 60.0	62.50 75.00	400 480	90.2 90.3	0.173 ohms	3.2 ohms	41.7 ohms	142.0	20.3	10.6	9.8	1.2	6.3	0.980	.140	.006
100AVR3 4P2-0400	50 60	62.5 75.0	78.13 93.75	400 480	112.7 112.8	0.142 ohms	3.6 ohms	41.7 ohms	159.1	21.8	10.8	10.0	1.1	6.3	1.044	.143	.006
125AVR3 4P1-0600	50 60	88.3 100.0	104.16 125.00	400 480	150.3 150.4	0.078 ohms	4.0 ohms	44.4 ohms	146.4	18.8	8.4	7.9	0.7	4.7	1.160	.149	.007
150AVR3 4P1-0800	50 60	104.2 125.0	130.21 156.25	400 480	187.9 188.0	0.056 ohms	3.0 ohms	44.4 ohms	150.4	18.3	7.5	7.1	0.8	4.1	1.300	.158	.007
4P1-1000	50 60	125.0 150.0	156.25 187.50	400 480	225.5 225.6	0.064 ohms	2.1 ohms	44.4 ohms	133.5	16.1	6.4	6.2	1.9	3.4	1.314	.158	.007

PUBLICATION NUMBER: **350-00002-00**
PUBLICATION DATE: **JUNE 1981**

INSTRUCTION MANUAL

KAMAG 18 GENERATOR

Serial Number

_____

INCLUDES

General Description
Theory of Operation
Checkout and Operation
Maintenance and Troubleshooting
Drawings and Parts Data

KATO ENGINEERING
RELIANCE ELECTRIC

NOTICE

THROUGHOUT THIS MANUAL FREQUENCY IS EXPRESSED IN HERTZ RATHER THAN CYCLES PER SECOND (CPS).

50 Hertz = 50 CPS
60 Hertz = 60 CPS

KAMAG GENERATORS designed for 105° C. or 130° C. temperature rise will have different kilowatt ratings than listed in paragraph 1.6. Any machine designed for 130° C. rise may be operated at its rated KW only during standby use as described in NEMA Standards — Paragraph MG1-22.84.

PUBLICATIONS NO. 350-00002-00
PUBLICATION DATE: JUNE 1981
SUPERCEDES PUBLICATION NO. INS-13-69B

Printed in U.S.A.

KATO KAMAG 18 SERIES GENERATORS

This manual contains Installation, Operation and Maintenance instructions for KATO KAMAG 18 series brushless synchronous revolving field generators. The generators are manufactured in both a single bearing and a two bearing line. Single bearing generators are designed for direct coupling to industrial engines while two bearing generators are designed for flexible or belt coupling to electric motors and other types of prime movers. The series is available in ratings of from 60 to 150 kilowatts. The KAMAG 18 generator incorporates an integral brushless rotating exciter and saturable transformer voltage regulator which has a built-in series boost and a solid state preamplifier. The voltage regulator is mounted in the generator terminal box. An auto voltage adjust potentiometer is standard on all units allowing manual adjustment of output voltage.

The KAMAG 18 series has the over all dependability of KATO Engineering Company products. The brushless design and use of a solid state voltage regulator eliminates all movable contacts and brushes. Absence of brushes and contacts which are subject to wear ensures maximum service life with a minimum of periodic preventive maintenance. Bearings are oversize ball bearings, fully shielded; no periodic replenishment of grease is required.

In general, the KAMAG 18 generator should require little maintenance other than keeping the unit clean.

For performance and longest service life, the following procedures are especially important:

MAKE CERTAIN THE GENERATOR IS PROPERLY CONNECTED TO THE PRIME MOVER.

MAKE CERTAIN THE GENERATOR IS CORRECTLY CONNECTED FOR THE LOAD IT IS SUPPLYING.

MAKE CERTAIN THE LOAD DOES NOT EXCEED THE GENERATOR RATING.

MAKE CERTAIN SUFFICIENT COOLANT AIR IS AVAILABLE. KEEP ALL AIR PASSAGES CLEAR OF DUST AND OTHER FOREIGN MATERIAL.

MAKE CERTAIN GENERATOR SPEED IS CORRECT – FREQUENCY IS DIRECTLY PROPORTIONAL TO GENERATOR SPEED. VARIATIONS IN SPEED WILL CAUSE VARIATIONS IN OUTPUT FREQUENCY. RUN GENERATOR 1800 RPM TO PRODUCE OUTPUT FREQUENCY OF 60 HERTZ. RUN GENERATOR 1500 RPM TO PRODUCE OUTPUT FREQUENCY OF 50 HERTZ.

WARRANTY

Kato Engineering Company warrants that the apparatus manufactured by us will deliver its rated output, providing such apparatus is properly installed, properly cared for, and properly operated under normal environmental conditions.

Standard products manufactured by Kato Engineering Company are warranted to be free from defects in workmanship and material for a period of one year from the date of shipment, and any products which are defective in workmanship or material will be repaired or replaced at the option of Kato Engineering Company. Final determination as to whether a product is actually defective rests with Kato Engineering Company. The obligation of Kato Engineering Company hereunder shall be limited solely to repair and replacement at its factory, of products that fall within the foregoing limitations, and shall be conditioned upon receipt by Kato Engineering Company of written notice within the warranty period of any alleged defects or deficiency. No products shall be returned to Kato Engineering Company without its prior consent. In no case can Kato Engineering Company accept shipping charges incurred either through return of defective items to its factory or return of repaired or replacement item to the user. Kato Engineering Company cannot assume responsibility or accept invoices for unauthorized repairs to its components, even though defective. In the case of components, parts, or units purchased by Kato Engineering Company, the obligation of Kato Engineering Company shall not exceed the settlement that it is able to obtain from the supplier thereof.

The life of the products of Kato Engineering Company depends to a large extent upon type of usage thereof, and Kato Engineering Company makes no warranty as to period of service nor as to fitness of its product for specific applications by the buyer unless Kato Engineering Company specifically agrees to otherwise in writing after the proposed usage has been made known to it. In no event will Kato Engineering Company be liable for consequential or incidental damages or for any expense incurred by Buyer due to use or sale of products sold by Kato Engineering Company.

The foregoing warranty is exclusive and in lieu of all other warranties expressed or implied, including but not limited to any warranty of merchantability or of fitness for a particular purpose.

This Warranty does not apply to experimental or developmental products.

KATO ENGINEERING COMPANY
Mankato, Minnesota

— TABLE OF CONTENTS —

SECTION 1 INTRODUCTION AND DESCRIPTION	PARAGRAPH	PAGE
INTRODUCTION	1.1	1 - 1
KAMAG 18 ELECTRICAL POWER GENERATING SYSTEM	1.2	1 - 1
KAMAG GENERATOR	1.3	1 - 1
KAMAG BRUSHLESS EXCITER	1.4	1 - 1
KAMAG 18 POWER OUTPUT OPTIONS	1.5	2 - 1
THEORY OF OPERATION	1.6	2 - 1

SECTION 2 INSTALLATION		
RECEIVING INSPECTION	2.1	2 - 1
UNPACKING AND STORAGE	2.2	2 - 1
LOCATION	2.3	2 - 2
MOUNTING SINGLE BEARING GENERATORS	2.4	2 - 2
COUPLING AND ALIGNMENT OF GENERATOR WITH DISK COUPLING AND ENGINE ADAPTOR	2.5	2 - 2
MOUNTING TWO BEARING GENERATORS	2.6	2 - 4
SELECTION OF DRIVES FOR TWO BEARING GENERATOR	2.7	2 - 4
BELT DRIVES — GENERAL INFORMATION	2.8	2 - 4
V—BELT	2.9	2 - 4
FLAT BELT	2.10	2 - 4
GEAR BELTS (TIMING BELTS)	2.11	2 - 4
GEAR AND FLEXIBLE COUPLINGS — GENERAL INFORMATION	2.12	2 - 8
GEAR DRIVE	2.13	2 - 8
INSTALLATION AND ALIGNMENT OF FLEXIBLE COUPLED DRIVES	2.14	2 - 8
VIBRATION	2.15	2 - 9
DOWELING	2.16	2 - 9
PROTECTIVE DEVICES	2.17	3 - 1
ELECTRICAL CONNECTIONS	2.18	3 - 1

SECTION 3 OPERATION		
PRE-OPERATION EQUIPMENT CHECK	3.1	3 - 1
INITIAL START PROCEDURES FOR THE KAMAG 18 GENERATOR	3.2	3 - 1
SINGLE GENERATOR OPERATING INSTRUCTIONS	3.3	3 - 2
OPERATING INSTRUCTIONS FOR PARALLEL OPERATION OF GENERATORS	3.4	3 - 2
PHASE ROTATION	3.5	3 - 2
SYNCHRONIZING PARALLELED GENERATORS	3.6	3 - 2
DIVISION OF POWER LOAD AMONG PARALLELED GENERATORS	3.7	4 - 1
DIVISION OF REACTIVE KVA AMONG PARALLELED GENERATORS	3.8	4 - 1

SECTION 4 MAINTENANCE		
PREVENTIVE MAINTENANCE	4.1	4 - 1
CLEANING	4.2	4 - 2
WINDINGS — PROTECTION	4.3	4 - 2
INSULATION RESISTANCE TEST	4.4	4 - 2
DRYING WINDINGS	4.5	4 - 2
TESTING BRUSHLESS EXCITER ROTATING RECTIFIERS WITH AN OHMMETER	4.6	4 - 3
TESTING BRUSHLESS EXCITER ROTATING RECTIFIERS WITH A TEST LAMP	4.7	4 - 3
TESTING SURGE PROTECTOR WITH TEST LAMP	4.8	4 - 4
RESTORING RESIDUAL MAGNETISM	4.9	4 - 4
REMOVING BEARINGS	4.10	4 - 4
INSTALLING BEARINGS	4.11	4 - 5
TROUBLESHOOTING	4.12	4 - 5
TWO BEARING KAMAG 18 GENERATOR DISASSEMBLY INSTRUCTIONS	4.13	4 - 8
SINGLE BEARING KAMAG 18 GENERATOR DISASSEMBLY INSTRUCTIONS	4.14	4 - 8

LIST OF ILLUSTRATIONS

SECTION 1 INTRODUCTION AND DESCRIPTION

FIGURE 1 - 1 KAMAG 18 AC GENERATOR ..... 1 - 0
FIGURE 1 - 2 GENERATOR FRAME AND STATOR ASSEMBLY ..... 1 - 1

SECTION 2 INSTALLATION

FIGURE 2 - 1 CHECKING BEARING END CLEARANCE ..... 2 - 4
FIGURE 2 - 2 ENGINE AND GENERATOR COUPLING DIMENSIONS ..... 2 - 5
FIGURE 2 - 3 MEASURING DISTANCE FROM GENERATOR ADAPTER TO DRIVE DISKS ..... 2 - 5
FIGURE 2 - 4 CHECKING ENGINE FLYWHEEL HOUSING RUNOUT ..... 2 - 6
FIGURE 2 - 5 CHECKING ENGINE FLYWHEEL RUNOUT ..... 2 - 6
FIGURE 2 - 6 ALIGNING GENERATOR TO ENGINE WITH PILOT BOLTS ..... 2 - 6
FIGURE 2 - 7 MOUNTING GENERATOR TO BASE ..... 2 - 7
FIGURE 2 - 8 CHECKING GENERATOR SHAFT RUNOUT ..... 2 - 7
FIGURE 2 - 9 CROSS SECTIONAL VIEW — DRIVE DISKS AND FLYWHEEL ..... 2 - 7
FIGURE 2 - 10 TESTING ANGULAR ALIGNMENT OF MOTOR AND GENERATOR SHAFTS ..... 2 - 8
FIGURE 2 - 11 TESTING ANGULAR ALIGNMENT OF MOTOR AND GENERATOR SHAFTS FOLLOWING COUPLING INSTALLATION ..... 2 - 8
FIGURE 2 - 12 TESTING PARALLEL ALIGNMENT OF MOTOR AND GENERATOR SHAFTS ..... 2 - 9
FIGURE 2 - 13 TESTING PARALLEL ALIGNMENT OF MOTOR AND GENERATOR SHAFTS FOLLOWING COUPLING INSTALLATION ..... 2 - 9

SECTION 3 OPERATION

FIGURE 3 - 1 SYNCHRONIZING PARALLELED GENERATOR USING SYNCHRONIZING LIGHTS ..... 4 - 1

SECTION 4 MAINTENANCE

FIGURE 4 - 1 TESTING ROTATING RECTIFIERS WITH AN OHMMETER ..... 4 - 3
FIGURE 4 - 2 TEST LAMP ..... 4 - 4
FIGURE 4 - 3 ROTATING RECTIFIERS ..... 4 - 4
FIGURE 4 - 4 REMOVING BEARING ..... 4 - 5
FIGURE 4 - 5 INSTALLING BEARING ..... 4 - 5
FIGURE 4 - 6 EXPLODED VIEW DRAWING, TWO BEARING KAMAG 18 GENERATOR ..... 4 - 10
FIGURE 4 - 7 EXPLODED VIEW DRAWING, SINGLE BEARING KAMAG 18 GENERATOR ..... 4 - 11

LIST OF TABLES

TABLE A ALLOWABLE FLYWHEEL AND DRIVE DISK RECESS RUNOUT ..... 2 - 6
TABLE B PREVENTIVE MAINTENANCE SCHEDULE ..... 4 - 2
TABLE C TROUBLESHOOTING CHART ..... 4 - 6
TABLE D PART DESCRIPTION TABLE FOR FIGURE 4 - 6, TWO BEARING KAMAG 18 GENERATOR ..... 4 - 9
TABLE E PART DESCRIPTION TABLE FOR FIGURE 4 - 7, SINGLE BEARING FLEXIBLE DISK COUPLED KAMAG 18 GENERATORS ..... 4 - 9

METER CABINET
(OPTIONAL)

MANUFACTURED IN SINGLE BEARING WITH ADAPTOR AND FLEXIBLE DISK TYPE COUPLING ADAPTABLE TO ALL STANDARD ENGINES; THE TWO BEARING SERIES IS FOR BELTED OR COUPLED SERVICE.

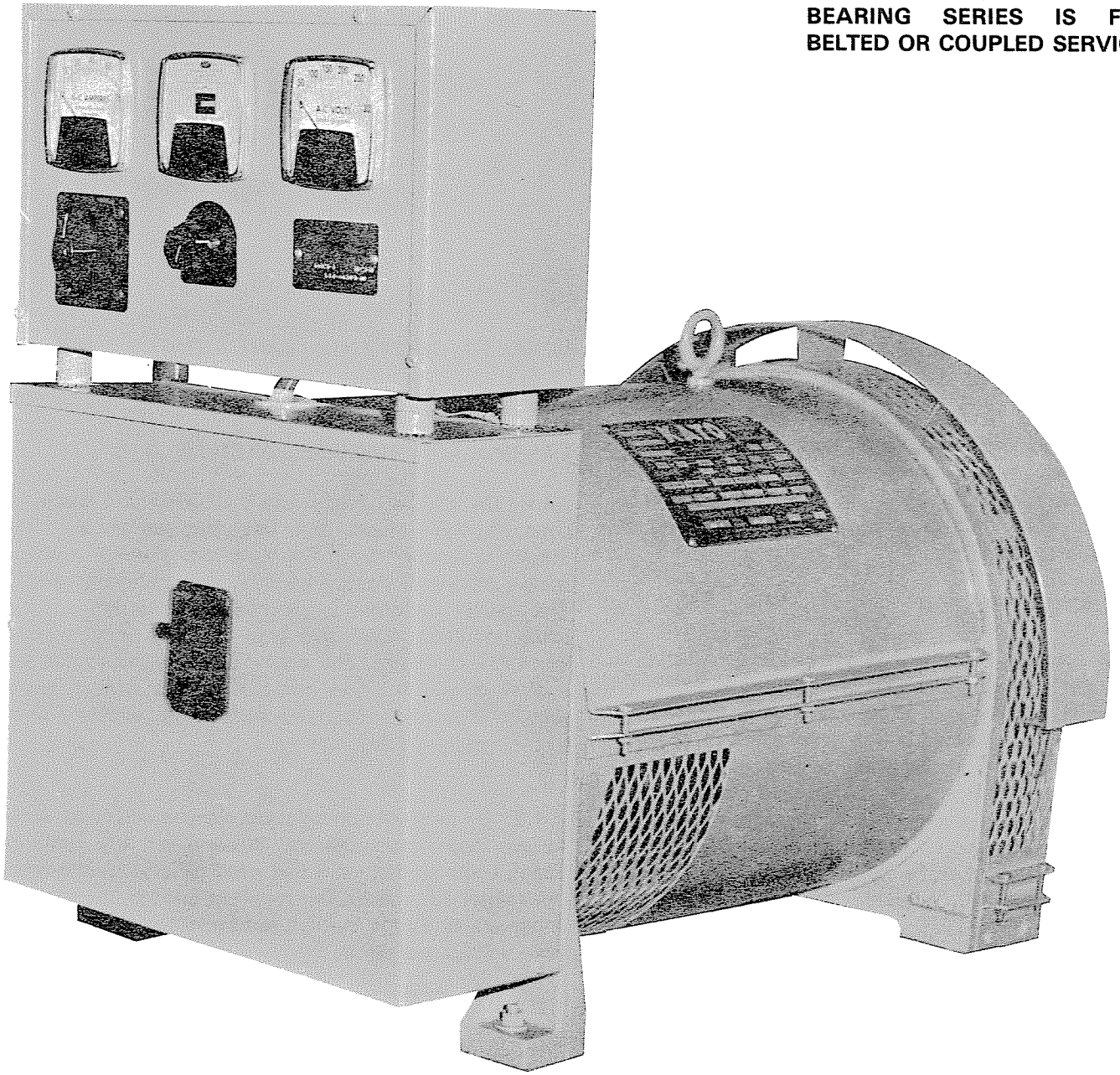

VOLTAGE REGULATOR MOUNTED IN SPACIOUS TERMINAL BOX WITH ADEQUATE ROOM FOR AIR CIRCUIT BREAKERS

FIGURE 1-1 KAMAG 18 AC GENERATOR

SECTION 1 INTRODUCTION AND DESCRIPTION

1.1 INTRODUCTION

1.1.1 The KAMAG 18 series by Kato Engineering Co. is a complete electrical power generating system including AC generator, brushless exciter and voltage regulator designed and built to be light enough to be easily movable, rugged enough to be durable and versatile enough to be part of any fixed installation.

1.1.2 This instruction manual has been compiled to provide receiving and inspection procedures, precautions and recommendations as to assembly to prime movers and location for operation, initial start-up and operation instructions, and routine maintenance recommendations. With proper maintenance and operation, the KAMAG 18 generator will provide many years of trouble-free service.

1.2 KAMAG 18 ELECTRICAL POWER GENERATING SYSTEM

1.2.1 The KAMAG 18 electrical power generating system can be divided into three basic components; the AC generator, brushless exciter and static regulator. Each component has been designed and built to insure maximum simplicity and reliability without sacrificing quality and performance.

1.3 KAMAG GENERATOR

1.3.1 The KAMAG Generator in a word is versatility. Many different configurations can be supplied to aid in coupling to the prime mover. The two bearing arrangement can be used wherever it is impracticable to have the power output shaft of the prime mover support the drive end of the generator rotor. KAMAG 18 generators of two bearing design use an antifriction bearing on each end of the shaft to support the rotor assembly. The two bearing type generator can be driven through any non-weight bearing coupling such as "V" belts, rubber block, spring, etc.

1.3.2 The KAMAG Generator is also manufactured in a single bearing line where the power input end of the rotor is supported by the prime mover. The generator frame and rotor can be purchased to fit any standard SAE flywheel and flywheel housing in its size range. Adaption can also be made to several commonly used non-SAE drives. A weight bearing semiflexible laminated plate coupling is furnished with the single bearing units for direct coupling to the prime mover.

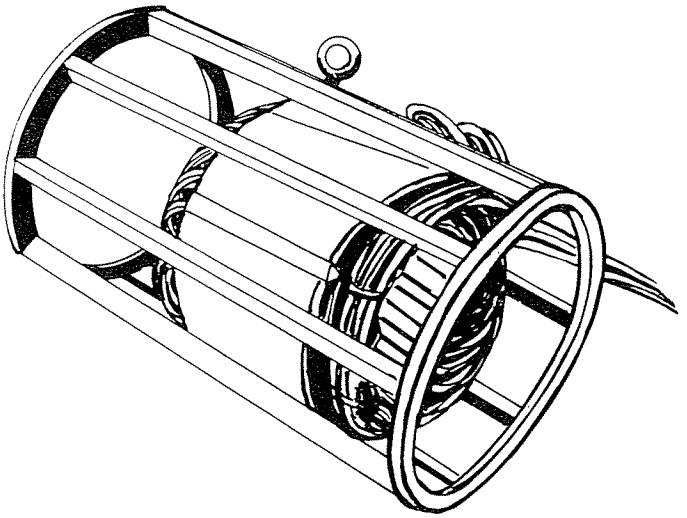

FIGURE 1-2 GENERATOR FRAME & STATOR ASSEMBLY

1.4 KAMAG BRUSHLESS EXCITER

1.4.1 The KAMAG BRUSHLESS EXCITER is a revolving armature, three phase, high frequency generator. The output is rectified by a full wave three phase rectifier bridge mounted directly on the main generator shaft. The exciter armature is pressed into position on the main generator shaft and held in place by a square key and locking nut. The exciter stator is secured to the endbell assembly. The purpose of the exciter is to provide a rotating magnetic amplifier to supply power to the main generator field.

1.4.2 By using the brushless design, components such as slip rings, commutators, brushes, or any form of sliding contacts that wear and need periodic maintenance have been eliminated. The rectifiers used in the rectifier bridge are of a type that are self protected against failure from voltage transients.

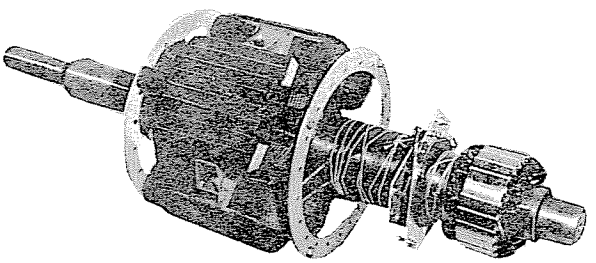

FIGURE 1-3 GENERATOR ROTOR AND EXCITER ARMATURE ASSEMBLY

1 5 KAMAG 18 POWER OUTPUT OPTIONS

1.5.1 Any KAMAG 18 generator can be operated at any of a wide range of voltages for both single and three phase, 50 or 60 Hertz. The 60 Hertz single and three phase rating of the generator can be found on the nameplate. When operating at 50 Hertz, care must be taken to reduce the load to 5/6 of the 60 Hertz rating.

For 50 Hertz operation decrease generator shaft speed to 1500 RPM and reduce load to 5/6 of 60 Hertz rating.

1.5.2 The KAMAG 18 generators are multi-voltage machines. Thus by making the proper electrical connections they can be made to produce most common single and three phase 50 and 60 Hertz voltages. The electrical connections which must be made as well as voltages available are shown on the wiring diagram provided with the generator set.

1.6 THEORY OF OPERATION

1.6.1 The generator output voltage is produced in the generator stationary armature (stator). Voltage is induced into the stator windings by a rotating magnetic field produced by the turning generator field.

1.6.2 In order for the generator field to become magnetized and produce a rotating magnetic field, a DC voltage (excitation) must be fed to the generator field coils and the generator rotor must be turning.

1.6.3 The excitation voltage is supplied by the exciter. The exciter field poles retain some permanent magnetism thus producing a magnetic field in the exciter. When the generator is started, voltage is induced in the exciter armature windings, fed to the rotating rectifiers, rectified and fed to the generator field. The generator field then becomes magnetized and produces a rotating magnetic field. Control of the degree of magnetism of the generator field and thus the voltage induced into the generator stator windings is dependent on the voltage it is supplied by the exciter. This is controlled by regulating the exciter field by controlling the field current fed to the exciter. The voltage regulator supplies and controls the field current fed to the exciter field.

SECTION 2 INSTALLATION

2.1 RECEIVING INSPECTION

2.1.1 The KAMAG 18 generator is carefully packed and crated for shipment, and can withstand most shocks incurred during transit. Before accepting shipment from the transportation company examine the crating carefully to determine if any damage has occurred during shipment. Unpack the unit as described in paragraph 2.2 and then carefully examine the sheet metal frame and exciter cover for signs of damage. Remove terminal box cover and examine the inside of the terminal box for signs of damage to wiring and components. Inspect for loosely mounted components and the presence of moisture. Inspect to make certain foreign material such as crating nails, loose bolts or packing material which may have fallen into the machine during unpacking are removed. On two-bearing machine turn the rotor by hand to make certain it rotates freely without binding. If damage is noted, determine the extent of damage and immediately notify the transportation company claims office and KATO Engineering Company. Be sure to give complete and accurate details when reporting damage.

2.1.2 If the generator is to be placed in storage repackage and crate the generator set. Recommended procedures for storage are contained in paragraph 2.2.

2.2 UNPACKING AND STORAGE

2.2.1 If the generator is received during cold weather, let the crated unit slowly warm to room temperature before removing the protective crating and packing material. This precaution will minimize the condensation of moisture on coil surfaces, eliminating the possibilities of wet windings and insulating materials which could cause early malfunctions of the generator.

2.2.2 Unpack the generator with care to avoid damage to the unit. Move the generator to the mounting location by attaching an overhead hoist to the eye-bolts installed in the generator frame. Determine that the hoist, when used, is of sufficient strength to adequately support the weight of the generator. Hoist and hoist cables should have a rating of not less than 1½ times the weight of the generator.

CAUTION

ALWAYS MAKE CERTAIN EXTREME CARE IS TAKEN WHEN MOVING THE GENERATOR TO PREVENT ITS STRIKING OTHER OBJECTS OR PERSONNEL. NEVER APPLY A LIFTING FORCE TO STRUCTURAL POINTS OTHER THAN THOSE PROVIDED FOR THAT PURPOSE.

2.2.3 If the generator is not to be installed in its operating location as soon as received, it should be stored in a clean, dry area, not subject to sudden temperature or humidity changes. If possible, storage should be in an ambient temperature of approximately normal room temperature. Units which cannot be stored in a temperature and humidty controlled area and which are to be in storage for a period of longer than six months should be prepared for storage as follows:

a. Install desiccant bags under the generator cover and inside the terminal box and vacuum seal the unit in a covering of polyethelene.

b. Adequately tag the unit to ensure that desiccant bags are removed before the generator is placed in operation.

2.3 LOCATION

2.3.1 The KAMAG 18 series generator can be installed in any well ventilated area which affords sufficient accessibility for operation and maintenance of the unit and allows a sufficient unobstructed flow of coolant air. Avoid locations which subject the generator to excessive moisture, dust, steam or the fumes from acids, alkalines or other corrosive chemicals. If such exposure cannot be avoided, establish a rigid periodic preventive maintenance schedule. The adverse effect of excessive moisture can usually be eliminated or at least greatly lessened by the use of space or strip heaters. If the generator windings have become wet, check winding insulation resistance and if low, dry windings before operating generator. Refer to paragraphs 4.4 and 4.5.

2.3.2 The foundation or supports which mount the generator and prime mover must be rigid, level and of ample size and strength to support the weight of the generator and prime mover. Although a reinforced concrete foundation usually makes the best foundation for heavy machinery, the generator and prime mover may be placed on any concrete, steel or other structural material which will adequately support the weight of the unit. Bearing loads of structural materials can be obtained by referring to engineering handbooks.

2.4 MOUNTING SINGLE BEARING GENERATORS

2.4.1 The generator can be mounted on an extension of the engine base or on a separate foundation which is properly aligned and level with the engine foundation. Install shims between the generator base and the mounting surface as necessary to level and properly align the generator with the prime mover.

2.5 COUPLING AND ALIGNMENT OF GENERATOR WITH DISK COUPLING AND ENGINE ADAPTOR

2.5.1 The disk coupling consists of several steel disks which are securely bolted to the generator rotor and to the engine flywheel. Because close tolerances are maintained in the manufacture of the engine components, generator frame and drive disks, the only alignment procedures which should normally be required are to make certain the rotor shaft and the engine flywheel are properly aligned and that the generator bearing has a nominal endclearance of: Total engine crankshaft axial movement plus 1/16 inch (1.588 millimeter). To insure proper alignment check the dimensions listed in the following steps.

NOTE: Clean accumulations of dirt or grease from mounting surfaces before checking dimensions or assembling the generator to the engine.

1. Remove generator wrapper cover and terminal box cover.

2. Check generator bearing endclearance and alignment of exciter field and exciter armature. Dimension a', of figure 2-1 should compare with dimension given in instruction INS-2-70A supplied with generator. Exciter field and exciter armature should be aligned horizontally.

3. Check the distance from the engine bell housing mounting surface and the drive disk recess (dimension C , figure 2-2) and check the distance from the generator endring mounting surface to the outside surface of the drive disks (dimension Y figure 2-2). Dimension Y should equal dimension C .

NOTE: The generator rotor shaft should be parallel with the generator frame when checking dimension Y .

If C is more than Y install additional spacers between the generator drive hub and the drive disks.

NOTE: An additional spacer is normally supplied with generator.

Katolight Service - Master Repair Manual - Page 474

If Y is more than C remove spacers from between the generator drive hub and drive disks.

4. Check the diameter of the drive disks and the flywheel drive disk recess, dimensions S and S', figure 2-2. If the drive disks are over or under size return them to the factory. Do not attempt to grind the drive disks.

5. Check to make certain drive disk and flywheel drive disk recess bolt hold centers are equal, dimensions B and B', figure 2-2. Return drive disks and give flywheel data if disks do not "match" flywheel dimensions. Never attempt to drill out drive disk holes.

6. With indicator base mounted on the flywheel and the indicator finger on the flywheel housing as shown in figure 2-4, turn the engine through one revolution. Maximum total indicator reading should not exceed .003 inch per foot diameter or approximately .025 millimeter per 100 millimeter diameter of the flywheel housing. See TABLE A. If runout exceeds limits, contact KATO Engineering Company and the engine manufacturer for recommendations. State flywheel housing size and runout recorded.

7. With indicator base mounted on the flywheel housing and the indicator finger on the drive disk recess as shown in figure 2-5, turn the engine through one revolution and check runout. Maximum total indicator reading should not exceed .003 inch per each foot diameter or approximately .025 millimeter per 100 millimeter diameter of the flywheel. Refer to TABLE A. If runout exceeds limits, contact KATO Engineering Company and the engine manufacturer for recommendations. State flywheel size and runout recorded.

2.5.2 When dimensions are satisfactory, assemble the generator to the engine as described in the following steps:

NOTE: The generator is connected to the engine by inserting bolts from the generator side and tightening them into the threaded holes in the engine flywheel and flywheel housing. Bolts must be of proper length to assure adequate threading into the holes in the engine flywheel and flywheel housing.

1. Make two pilot bolts by removing heads of bolts and starting them into the holes in the engine flywheel and flywheel housing on a line across the center of the mounting surfaces as shown in figure 2-6.

2. Install lockwashers on the generator adapter endring to bell housing bolts. Install lockwashers on the drive disk to flywheel bolts.

NOTE: If there is not sufficient clearance in flywheel to permit tightening of the bolts which secure the drive disks to the flywheel, the use of spacers as shown in figure 2-9 will usually alleviate the problem.

3. Most fans are made up of two halves. This type fan can be taken apart for more working space.

NOTE: The fan was set at the factory with clearance between the fan and baffle which would provide maximum efficiency of the fan. Before loosening and moving the fan, mark position of fan on shaft. Reinstall fan to marked position approximately ½ inch or 12.7 millimeters clearance between fan and fan baffle is normal.

4. Support the generator fan from an overhead hoist and move the generator horizontally into place. Make certain drive disks fit completely into the drive disk recess in the flywheel.

5. Install the flywheel bolts. Tighten bolts alternately and evenly. Remove the pilot bolt and install and tighten remaining bolt.

CAUTION

MAKE CERTAIN BOLTS ARE NOT OF EXCESSIVE LENGTH, SUCH THAT THEY BOTTOM OUT IN FLYWHEEL BEFORE THEY TIGHTEN AGAINST DRIVE DISKS.

6. Install and tighten alternately and evenly the flywheel housing bolts. See figure 2-7. Remove the pilot bolt and install the remaining bolt.

CAUTION

MAKE CERTAIN BOLTS DO NOT BOTTOM OUT BEFORE THEY SECURELY HOLD GENERATOR ADAPTER AGAINST THE FLYWHEEL HOUSING.

7. Retighten each bolt completely around the mounting of both the disk coupling and generator adapter.

8. Use a feeler gauge to see if there is a gap between the generator mounting feet and the generator mounting base. Add shims as necessary between the generator mounting feet and the base and then bolt the generator to the base.

9. If space permits, attach a dial indicator to the generator adapter with the dial indicator point on the generator shaft as shown in figure 2-8. Turn the engine through one revolution. Maximum total indicator reading should not exceed .005 inch or .127 millimeter.

NOTE: Fan must be moved to permit access to dial indicator.

10. When alignment checks are satisfactory, reposition and tighten fan.

NOTE: Install fan to its original position on shaft. This should have been indicated by marking the shaft before moving or removing fan. Fan should be between ¼ and ½ inch or 6.35 and 12.7 millimeter from baffle when properly positioned.

2.5.3 After coupling and alignment of the generator and engine is complete but before placing generator set in operation, check clearance between generator stationary and rotating parts, especially the exciter field and exciter armature. Replace all covers and guards before placing generator in operation.

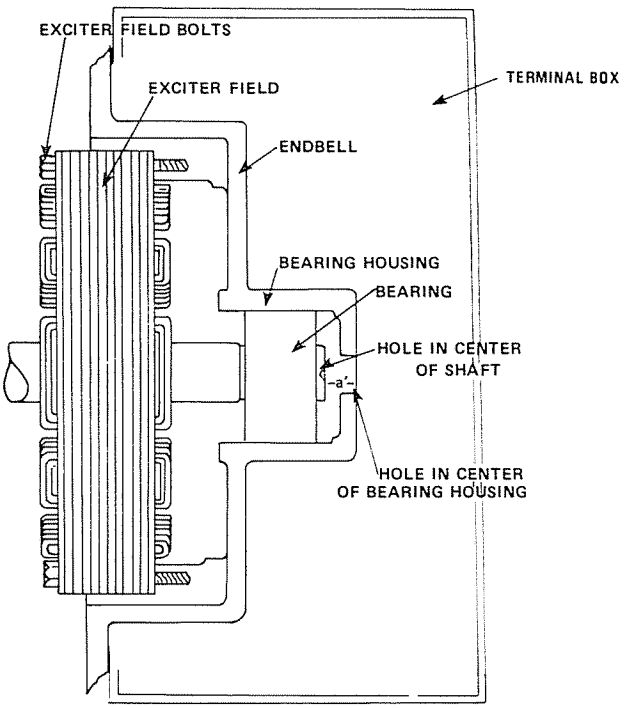

FIGURE 2-1 CHECKING BEARING END CLEARANCE Refer to Instruction INS-2-70A supplied with generator.

2.6 MOUNTING TWO BEARING GENERATORS

2.6.1 Two-bearing belt driven generators can be mounted on an extension of the prime mover base or on a separate foundation. Two-bearing generators which are connected to the prime mover by solid or flexible couplings or gear drives must be mounted on a rigid base. This base must provide mounting for both the generator and prime mover. The base must be placed on a level foundation and secured in place before the prime mover and generator are aligned. Refer to paragraphs 2.7 through 2.16.

2.7 SELECTION OF DRIVES FOR TWO BEARING GENERATORS

2.7.1 Satisfactory generator operation will depend upon careful selection of drive couplings. In general, solid couplings are not recommended except when the generator and prime mover frames are directly connected and belt drives should not be used when belt speed exceeds 5000 feet per minute or 1524 meters per minute.

2.8 BELT DRIVES - GENERAL INFORMATION

2.8.1 Proper alignment and tightness of belt drives is essential. Improper alignment and belt tightness will increase belt wear as well as increase bearing loads and vibration. Select belt drive in accordance with belt manufacturer's specifications. Make certain generator and prime mover are rigidly mounted. In general, belt drives are not recommended when belt speed exceeds 5000 feet per minute.

2.9 V - BELT

2.9.1 Use only matched belt sets and avoid minimum pitch sheaves and belts. Follow the V-belt manufacturer's specifications or NEMA limits for sheave pitch.

2.9.2 Make certain the shaft axis of the prime mover and generator are paralleled. Belts must enter and leave sheaves with no side bending. Tighten just enough to prevent slippage at full load. Never grease or use belt dressing on belts.

2.10 FLAT BELT

2.10.1 Selection of belts and pulleys of ample width will reduce amount of tension required to prevent slippage at full load. Lower belt tension reduces bearing loads and belt wear.

2.10.2 Position the pulleys so crowns are in the same plane. Make certain motors and generator shafts are paralleled. Observe belt manufacturer's or NEMA limits for pulley sizes.

2.11 GEAR BELTS (TIMING BELTS)

2.11.1 In general, installation of gear belts will be the same as for flat belts. The following precautions should be taken when installing a gearbelt drive:

a. Gearbelts should be installed with snug fit, neither too tight or too loose. High initial tension is not necessary but when torque is unusually high a loose belt may "jump grooves." If the belt jumps the grooves the tension should be increased gradually until satisfactory operation is attained.

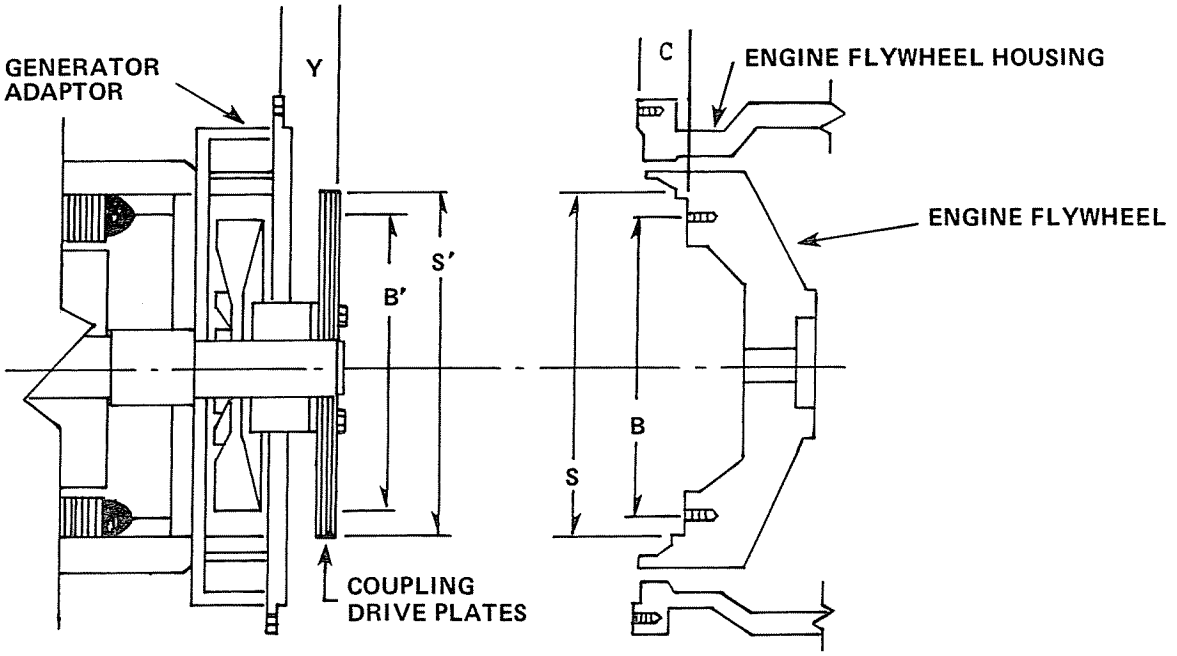

FIGURE 2-2 ENGINE AND GENERATOR COUPLING DIMENSIONS

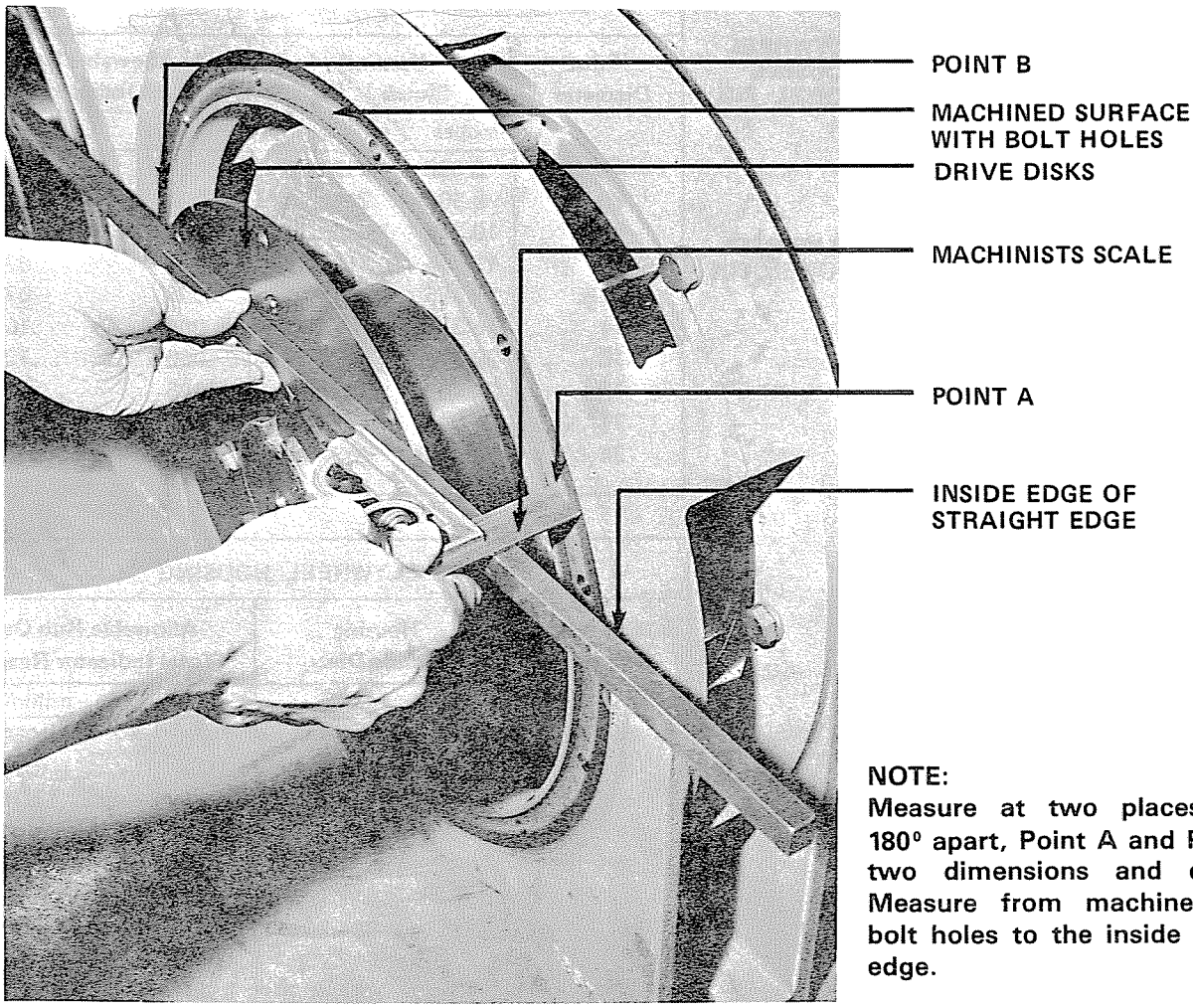

NOTE:
Measure at two places approximately 180° apart, Point A and Point B. Add the two dimensions and divide by two. Measure from machined surface with bolt holes to the inside edge of straight edge.

FIGURE 2-3 MEASURING DISTANCE FROM GENERATOR ADAPTER TO DRIVE DISKS, DIMENSION Y.

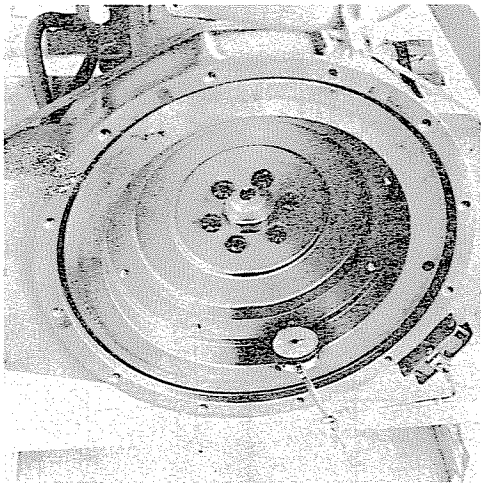

FIGURE 2-4. CHECKING ENGINE FLYWHEEL HOUSING RUNOUT

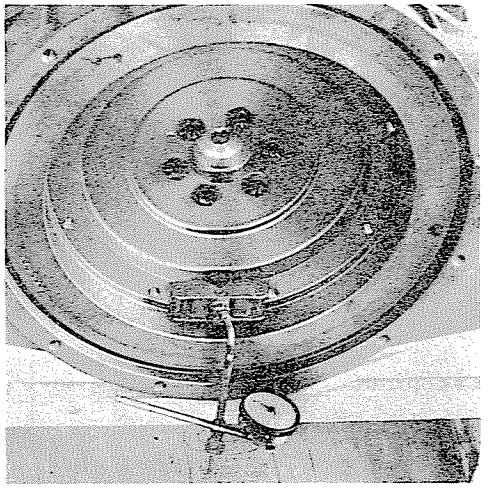

FIGURE 2-5. CHECKING ENGINE FLYWHEEL RUNOUT

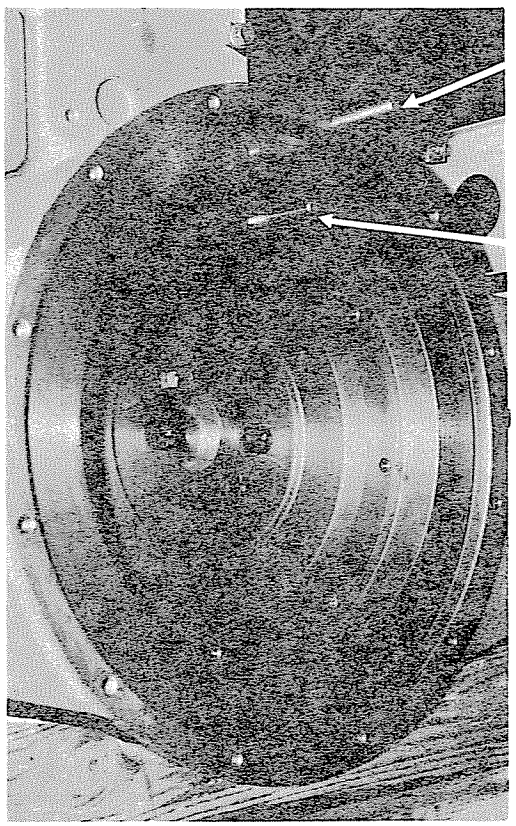

FIGURE 2-6. ALIGNING GENERATOR TO ENGINE WITH PILOT BOLTS

TABLE A

ALLOWABLE FLYWHEEL AND DRIVE DISK RECESS RUNOUT

FLYWHEEL DRIVE DISK RECESS				
Pilot Diameter	Nominal Clutch Dia.		Allowable Run Out (Total Indicator Reading)	
	inches	millimeters	inches	millimeters
6½	8.500	215.900	.002	.0508
7½	9.500	241.300	.002	.0508
8	10.375	263.525	.002	.0508
10	12.375	314.325	.003	.0762
11½	13.375	339.725	.003	.0762
14	18.375	466.725	.004	.1016
16	20.375	517.525	.005	.1270
18	22.500	571.500	.005	.1270
21	26.500	673.100	.006	.1524
24	.28.875	733.425	.007	.1778

FLYWHEEL HOUSING				
SAE Housing Number	Housing Inside Dia.		Allowable Run Out (Total Indicator Reading)	
	inches	millimeter	inches	millimeter
6	10.500	266.700	.002	.0508
5	12.375	314.325	.003	.0762
4	14.250	361.950	.003	.0762
3	16.125	409.575	.004	.1016
2	17.625	447.675	.004	.1016
1	20.125	511.175	.005	.1270
1½	23.000	584.200	.005	.1270
0	25.500	647.700	.006	.1524
00	31.000	787.400	.007	.1778

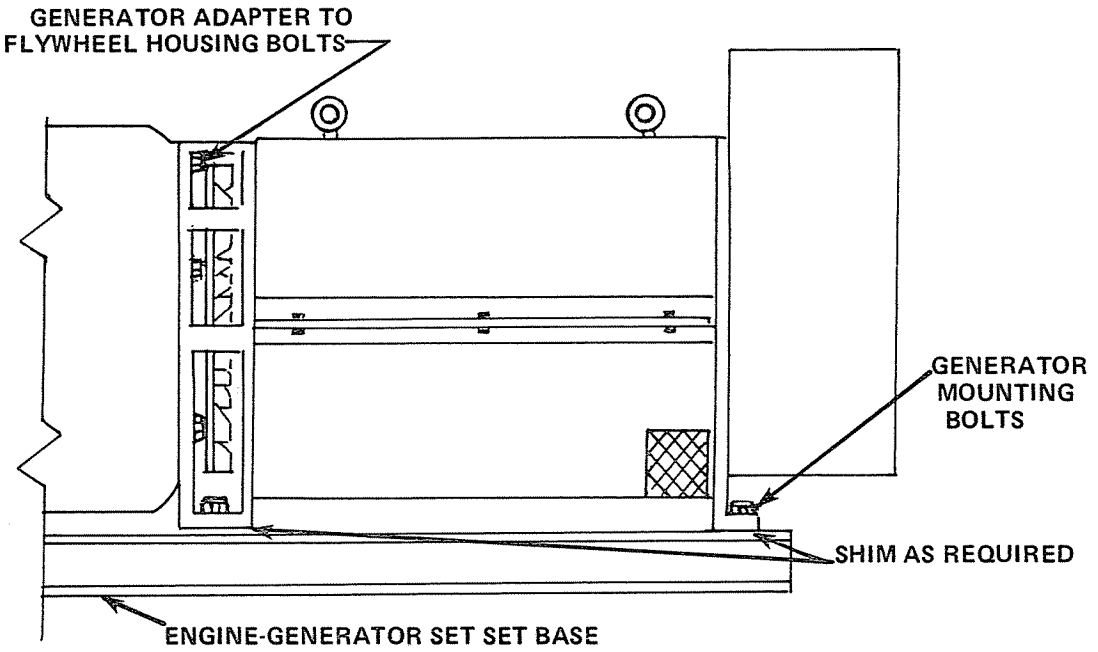

NOTE: MAKE CERTAIN BOLTS DO NOT BOTTOM OUT IN THE FLYWHEEL LEAVING DRIVE DISKS LOOSE IN THE FLYWHEEL.

FIGURE 2-7 MOUNTING GENERATOR TO BASE

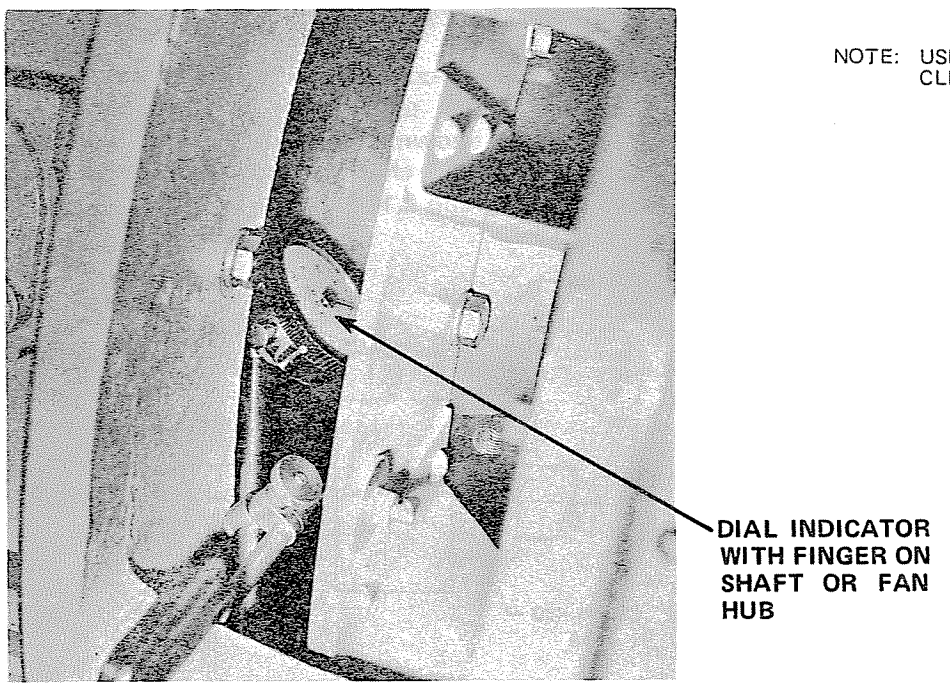

GURE 2-8 CHECKING GENERATOR SHAFT RUNOUT

NOTE: USE SPACERS ONLY SHOULD INSUFFICIENT CLEARANCE NOT PERMIT TIGHTENING BOLTS

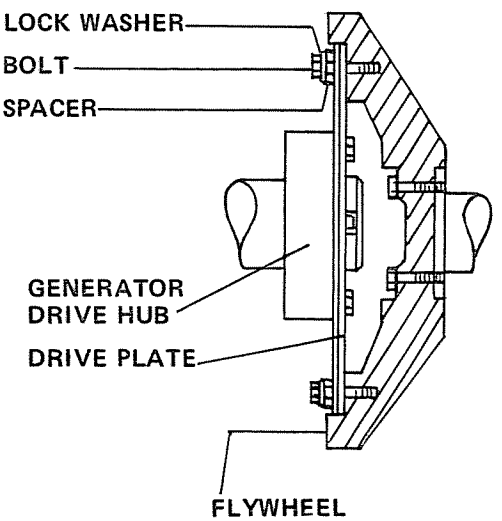

FIGURE 2-9 CROSS-SECTIONAL VIEW - DRIVE DISKS AND FLYWHEEL

b. Be sure that shafts are parallel and pulleys are in alignment. On a long center drive, because of the tendency of the belt to run against one flange, it is sometimes advisable to offset the driven pulley to compensate.

c. On a long center drive, it is imperative that belt sag is not enough to permit teeth in the slack side to engage the teeth on the tight side.

d. It is important that both prime mover and generator are mounted rigidly to prevent variation in belt tension.

e. Although belt tension requires little attention after initial installation, provision should be made for some center distance adjustment for ease in installing and removing belt. Do not force belt over flange of pulley.

2.12 GEAR AND FLEXIBLE COUPLINGS - GENERAL INFORMATION

2.12.1 When drives of these types are used instead of belt drives the prime mover and generator shafts must be carefully aligned and following alignment, the motor and generator must be firmly mounted to a rigid base to prevent misalignment of the unit shafts during operation. Excessive misalignment may be the cause of vibration, noisy operation, excessive coupling or gear wear or premature bearing failure.

2.13 GEAR DRIVE

2.13.1 Accurate alignment and rigid mounting are essential for satisfactory operation with gear drives. Pitch diameter and width should not be outside recommended NEMA limits. Avoid use of couplings which will impose excessive thrust on bearings.

2.13.2 In all cases, gear teeth must be centered with each other. Gear faces must be parallel and correct shaft center distance maintained. Avoid engagement of teeth so deep that they will bind or deflect. Refer to National Gear Manufacturers Association specifications.

2.13.3 Test for proper alignment by rotating shafts by hand. Check for backlash through at least one revolution of the shafts. Check backlash and gear face parallelism after tightening mounting bolts. Install or remove shims from under mounting feet to bring gear faces parallel.

2.14 INSTALLATION AND ALIGNMENT OF FLEXIBLE COUPLED DRIVES

2.14.1 The procedures outlined are for aligning flexible coupled drives. Follow the tolerances specified by the coupling manufacturer if they are less than described in this manual.

2.14.2 Install coupling hubs on generator and drive shafts in accordance with the installation procedures supplied by the maufacturer of the coupling. Then check for angular misalignment by scribing a reference mark on the coupling hub at the button or finger of the indicator to mark its position on the hub. Rotate both shafts simultaneously, keeping the finger or button of the indicator at the reference marks on the coupling hub. Note the reading on the indicator dial at each one-quarter revolution. Refer to figure 2-10 for test setup.

ANGULAR MISALIGNMENT OF THE SHAFTS MUST NOT EXCEED .001 INCH FOR EACH INCH (0.01 MILLIMETER FOR EACH CENTIMETER) OF RADIUS OF THE COUPLING HUB TOTAL INDICATOR READING.

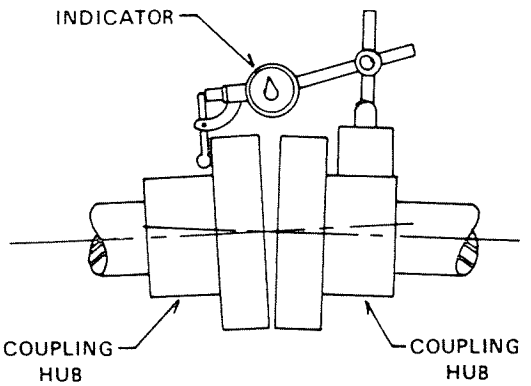

FIGURE 2-10. TESTING ANGULAR ALIGNMENT OF MOTOR AND GENERATOR SHAFTS

NOTE: If the motor generator set is moved to a new location, make test setup with coupling installed as shown in figure 2-11 and then rotate shafts and check alignment as described in paragraph 2.14.2.

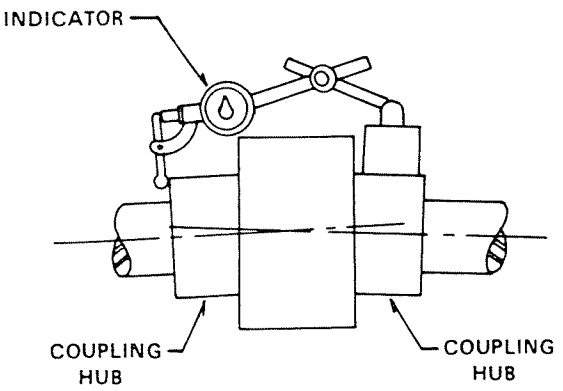

FIGURE 2-11 TESTING ANGULAR ALIGNMENT OF MOTOR & GENERATOR SHAFTS FOLLOWING COUPLING INSTALLATION

2.14.3 If angular misalignment is excessive, loosen motor and generator mounting bolts and place slotted shims under motor and generator mounting pads, as necessary, to correct alignment. Re-check alignment. Install or remove shims from under the mounting pads until aligned.

2.14.4 Check for parallel shaft (run-out) alignment by scribing a reference mark on the ground or machine diameter of the coupling hub at the finger or button of the indicator. Rotate both shafts simultaneously, keeping the button or finger of the indicator at the reference mark on the hub. Note the reading on the indicator dial at each one-quarter revolution. Refer to figure 2-12 for test set-up.

TOTAL RUN-OUT BETWEEN HUBS SHOULD NOT EXCEED .002 OF AN INCH OR .0508 MILLIMETER.

2.14.5 When run-out between hubs is excessive, install or remove shims from under each of the motor or generator mounting pads; then recheck alignment. Add or remove shims until shafts are parallel. Tighten motor and generator mounting bolts following angular and run-out alignment. Check base mounting bolts for tightness. Re-check alignment before operating unit.

NOTE: If the motor generator set is moved to a new location check for parallel alignment by making test setup as shown in figure 2-13 and then rotate shafts and check alignment as described in paragraph 2.14.4.

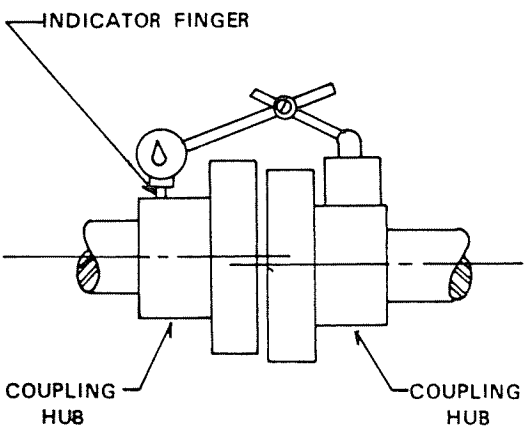

FIGURE 2-12. TESTING PARALLEL ALIGNMENT OF MOTOR AND GENERATOR SHAFTS

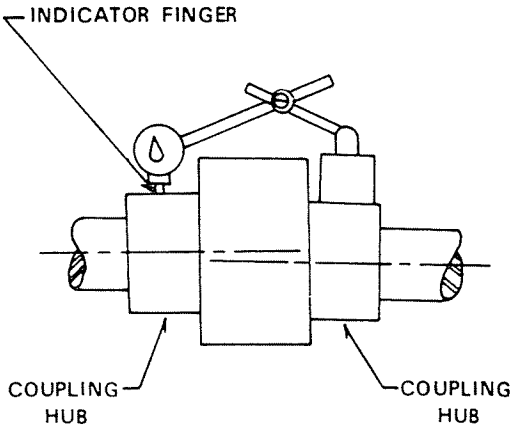

FIGURE 2-13. TESTING PARALLEL ALIGNMENT OF MOTOR AND GENERATOR SHAFTS FOLLOWING COUPLING INSTALLATION

2.15 VIBRATION

2.15.1 After alignment of motor generator set has been completed, run unit at no load and check for excessive vibration (See Operation Instructions, Section 3). If vibration is excessive loosen one motor mounting bolt slightly and if vibration decreases, add shims until retightening of bolt reduces or eliminates vibration. Repeat in turn for all motor mounting bolts.

2.15.2 When vibration and alignment of motor are within limits, run motor generator set at low load and check again for vibration. If excessive, add shims under generator mounting pads in same manner as for the motor. Re-check alignment after any change in shims to control vibration.

2.16 DOWELING

2.16.1 Doweling generator sets will prevent movement of the units during operation should the mounting bolts loosen slightly. Install dowels as follows:

a. Check the alignment after the generator set has been in operation about 40 hours. Correct alignment if not satisfactory (refer to preceding paragraphs).

b. Through opposite generator pads drill holes through and into the base. Holes should have a diameter slightly smaller than the dowel pin.

c. Ream the holes to the proper diameter for the pins, clean out chips and then install pins.

d. Repeat procedure for doweling of motor.

NOTE: Dowel prime movers (engine or motor) manufactured by others than Kato Engineering Company in accordance with the instructions supplied by the manufacturer of the prime mover.

2.17 PROTECTIVE DEVICES

2.17.1 Engine driven sets must be protected with adequate engine governors and against excessive over-speed. Refer to National Electrical Code and local electrical codes for minimum electrical requirements for the generator set. The output to the load of the KAMAG generator should always be protected with an overload protection device - circuit breaker or fuses.

2.18 ELECTRICAL CONNECTIONS

2.18.1 Before connecting the generator to the electrical power load, check nameplate for the electrical characteristics and connect the generator exactly as shown in the connection diagrams supplied with the generator set. Refer to National Electrical Code or applicable local regulations for minimum specifications for wire size, conduit and protective devices.

SECTION 3 OPERATION

3.1 PRE-OPERATION EQUIPMENT CHECK

3.1.1 After the KAMAG 18 AC generator is completely installed and wired, but before operating the unit for the first time, perform a check of the following equipment as follows:

a. If the generator has been subjected to extreme dampness during shipment or storage it may be necessary to dry out windings before placing the unit in operation. Refer to the procedures for testing winding insulation resistance and the procedures for drying windings described in Section 4 of this manual. Generators placed in operation after being subjected to very low temperatures should be slowly warmed to prevent condensation.

b. Check all interconnecting wiring against the connection diagrams supplied with the generator set. Make certain connections are insulated and taped.

c. Make certain no foreign objects are lodged in the generator. Remove all tools and shop cloths from the vicinity of the equipment.

d. Make certain all covers and guards are installed.

3.2 INITIAL START PROCEDURES FOR THE KAMAG 18 GENERATOR

3.2.1 After installation is complete and the checks listed in paragraph 3.1.1 have been completed, make an initial start and operational checkout of the equipment listed in the following general instructions:

a. Open the Output Circuit Breaker to disconnect the generator from the load.

b. Turn AUTO VOLTAGE ADJUST potentiometer to maximum resistance (full counter-clockwise).

c. Start the generator set in accordance with the prime mover manufacturer's specifications. Bring up to rated speed.

NOTE: If engine idle switch is used, set switch to run position when generator is at rated speed.

d. Stop generator set. Check rotation as unit slows to stop.

e. Again start generator set and bring up to rated speed. Monitoring output voltage with a voltmeter, turn AUTO VOLTAGE ADJUST potentiometer slowly clockwise to obtain desired voltage.

NOTE: If desired voltage cannot be obtained by turning the AUTO VOLTAGE ADJUST potentiometer it may be necessary to adjust the VOLTAGE RANGE ADJUST potentiometer. Turning potentiometers clockwise increases voltage by decreasing resistance and turning potentiometers counter-clockwise decreases voltage by increasing resistance.

f. Start and stop generator set several times; observe any unusual conditions such as excessive noise or vibration. Allow sufficient time between starts for cooling.

g. Close Output Circuit Breaker and apply a light load. Adjust AUTO VOLTAGE ADJUST potentiometer to obtain desired output voltage. Slowly increase load to generator rated power factor fully load value. Adjust AUTO VOLTAGE ADJUST potentiometer as necessary, to obtain desired output voltage.

h. Check voltage regulation. If voltage is not stable or response is slow, adjustment of the Stability Adjust resistor may be necessary. Refer to procedure given in the Voltage Regulation Instruction Manual.

i. During operation, observe the generator at regular intervals so that any abnormal conditions can be corrected before serious damage occurs.

j. With a steady rated power factor full load applied, check current on each line. Use clip-on ammeter if an ammeter is not incorporated in generator set.

k. Check line voltage. On three phase, phase 1 to 2, phase 2 to 3 and phase 1 to 3. On single phase: L1 to L2, L1 to N and L2 to N.

3.3 SINGLE GENERATOR OPERATION INSTRUCTIONS

3.3.1 If generator windings are wet, check winding insulation resistance and dry windings before operating generator. Refer to Section 4, paragraphs 4.3 and 4.4.

3.3.2 Start and operate the generator set in accordance with the following general instructions:

a. Start the generator set in accordance with the operating instructions supplied by the manufacturer of the prime mover. Operate at rated speed.

NOTE: If engine idle switch is provided, set to run position when generator is at rated speed.

b. When the AUTO VOLTAGE ADJUST potentiometer and VOLTAGE RANGE ADJUST potentiometer has been adjusted to provide the desired output voltage, no further adjustment of these devices is required prior to placing the generator set in operation. If previous voltage setting is unknown, turn the AUTO VOLTAGE ADJUST potentiometer to midpoint position before placing set in operation. During operation turn AUTO VOLTAGE ADJUST potentiometer to obtain desired output voltage.

NOTE: If desired voltage cannot be obtained, the Voltage Range Adjust potentiometer may need adjustment. Turning potentiometers clockwise increases voltage and when they are turned counter-clockwise voltage will decrease.

c. Check voltage regulation with rated power factor load applied. Refer to procedures outlined in paragraph 3.2.1, if output voltage or voltage regulation is not satisfactory.

d. During operation, observe the generator at regular intervals so that any abnormal conditions can be discovered and corrected.

e. Stop the generator in accordance with the instructions supplied by the manufacturer of the prime mover.

f. When the generator set is operated as a standby unit open the Output Circuit Breaker following shutdown of the generator set.

3.4 OPERATING INSTRUCTIONS FOR PARALLEL OPERATION OF GENERATORS

3.4.1 The voltage regulator must contain parallel operation components. Refer to the voltage regulator instruction manual. With the paralleling option, two or more generators may be paralleled successfully regardless of rating as long as each supplies no more than its full KW load rating. Do not attempt to operate in parallel any KAMAG generators that do not include the paralleling option. Also do not attempt to parallel a KAMAG generator with the commercial power lines.

CAUTION

DO NOT CLOSE THE LOAD CIRCUIT BREAKER OF THE GENERATOR TO BE PARALLELED WITH ONE THAT IS ON THE LINE, UNTIL THE GENERATORS HAVE BEEN CHECKED FOR PROPER PHASE ROTATION AND ADJUSTED FOR SYNCHRONIZATION AS DETAILED IN THE FOLLOWING PARAGRAPHS.

3.5 PHASE ROTATION

3.5.1 Before placing two or more three-phase generators in parallel, make certain the generators have the same phase rotation. This can be accomplished by connecting a three phase induction motor to each of the generators and checking the rotation of the motor. Care must be taken to make certain motor terminals are connected to the corresponding generator or bus terminals for each test. Phase rotation will be the same if the motor rotates in the same direction when connected to either generator.

3.5.2 If the motor rotates in the wrong direction when connected to one of the generators, reverse any two of the three generator leads (except the neutral lines). Recheck motor rotation and continue checks until the induction motor rotates in the correct direction.

3.6 SYNCHRONIZING PARALLELED GENERATORS

3.6.1 Do not attempt to parallel generators until each machine has been checked for proper phase rotation and that each generator is adjusted for the required system voltage with the line switch open.

3.6.2 If a synchroscope is not available, generators can be synchronized by using incandescent lamps connected in the load circuit as shown in figure 3-1. Make certain that the total voltage rating of the series lamps equals the voltage rating of the generator.

3.6.3 Sychronize the generators by varying the speed of the incoming generator until fluctuation of the lamps is very slow. When the lamps are dark close the line switch. Care must be taken to close the line switch at the instant the lamps are dark.

WARNING

EXERCISE EXTREME CAUTION WHEN USING THIS METHOD OF SYNCHRONIZING GENERATORS TO AVOID EXPOSURE TO DANGEROUS VOLTAGES.

3.7 DIVISION OF POWER LOAD AMONG PARALLELED GENERATORS

3.7.1 Adjust the engine governors in accordance with the engine manufacturer's instructions. Division of kilowatt or actual power load among generators operating in parallel is practically independent of generator excitation. Do not attempt to vary the amount of kilowatt load among paralleled generators by making adjustments to the voltage regulator.

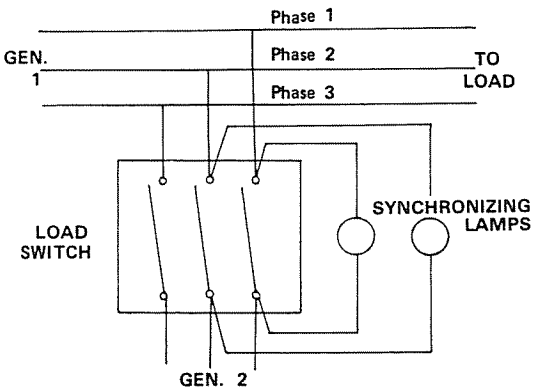

FIGURE 3-1 SYNCHRONIZING PARALLELED GENERATOR USING SYNCHRONIZING LIGHT

3.8 DIVISION OF REACTIVE KVA AMONG PARALLELED GENERATORS

3.8.1 Division of reactive KVA among paralleled generators depends upon generator excitation. Methods of correcting the excitation of individual generators should they take more or less than their share of the reactive KVA are the addition of cross-current compensation or voltage-droop controls to the voltage regulator circuit.

3.8.2 Adjustment of the cross current or voltage droop rheostat would usually be set so that there is just enough resistance in the circuit to give stable operation of the generators under reactive KVA load conditions.

3.8.3 Place generator in operation. Apply lagging power factor load and check voltage droop. Maximum voltage droop from no load to full load is obtained with full voltage-droop resistance. A droop of 4 to 6% is frequently employed. Adjust each generator to be paralleled for identical droop.

3.8.4 Bring all generators up to correct speed and adjust all output voltage to identical values. Synchronize and parallel generators. Load the paralleled generators and check for satisfactory division of load currents. Correct by adjusting voltage-adjust rheostats and the droop-control resistors.

SECTION 4 MAINTENANCE

4.1 PREVENTIVE MAINTENANCE

4.1.1 Preventive maintenance is the practice of inspecting and cleaning the generator set and eliminating minor disorders before they become serious. A routine regular preventive maintenance program practiced conscientiously will ensure peak performance, lengthen the life of the generator, and eliminate or at least greatly reduce breakdown time.

4.1.2 The preventive maintenance schedule described in Table B is enclosed as a guide for establishing a preventive maintenance program for generators operating under standard conditions. The specific operating conditions should be analyzed by the user of the equipment and a preventive maintenance program established accordingly. When preventive maintenance inspection deter-

mines cleaning is necessary, clean the generator and controls as described in paragraph 4.2.1.

TABLE B

PREVENTIVE MAINTENANCE SCHEDULE
1. Inspect lead wires and control devices wiring for cracked insulation and loose terminals.
2. Inspect control equipment for loose mounting hardware.
3. Inspect control devices for accumulation of dust, moisture and other foreign matter.
4. Clean the outside of the generator assembly and ventilating screens.
5. When dust or moisture is excessive, clean and/or dry the inside of generator assembly.
6. With unit running check control devices and meters for correct adjustment and operation.
7. With unit running observe any unusual noise or vibration. Refer to trouble shooting chart for possible causes of noise and vibration.

4.2 CLEANING

4.2.1 When inspection determines cleaning is necessary clean the generator and controls as follows:

a. Wipe loose dirt from exterior painted surfaces of generator and the generator controls panel assembly (controller) with a clean cloth. Remove stubborn accumulations of dirt with a detergent or solvent. Clean all ventilating ports with a vaccuum cleaner or use filtered compressed air at a pressure of from 25 to 40 PSI.

b. Clean inside of generator with a vacuum cleaner or use dry filtered compressed air at a pressure of from 25 to 40 PSI. Remove stubborn accumulations of dirt and grease from windings with naptha.

WARNING

EXERCISE EXTREME CARE WHEN USING NAPTHA. USE ONLY IN WELL VENTILATED, FLAME AND SPARK FREE AREA.

c. Clean electrical contacts such as relay contacts switch contacts and terminals with an approved contact cleaner. Do not file contacts.

4.3 WINDINGS - PROTECTION

4.3.1 Generators operating intermittently in very damp locations should be protected with space heaters. Generators placed in operation after being subjected to very low temperatures should be slowly warmed to prevent excessive condensation. Windings resistance should be checked before placing the generator in operation if the windings are wet.

4.4 INSULATION RESISTANCE TEST

4.4.1 Winding insulation resistance can be conveniently and safely tested with a hand cranked megger of not over 500 volts. The following formula is an accepted standard for measuring insulation resistance of stator windings. Winding insulation resistance measured at 500 volts DC after one minute should not be less than:

$$\text{Resistance in megohms} = \frac{\text{Rated Voltage of Machine} + 1000}{1000}$$

The above formula is satisfactory for most checks. For more information see "Recommended Practice for Insulation Resistance Testing AC Rotating Machinery". AIEE Standard No. 43.

When megging any generator winding remove all connections to associated components such as the voltage regulator, rectifier bridge, or load.

4.5 DRYING WINDINGS

4.5.1 If the insulation fails to meet the test standards the generator may be dried out by heat from a warm air oven, heat lamps or strip heaters. The temperature should not exceed 150°F. The generator windings may also be dried by application of internal heat as described in paragraph 4.6.2.

WARNING

WHEN OVEN DRYING, USE A FORCED AIR CIRCULATION OVEN, NOT A RADIANT TYPE. RADIANT OVENS WILL OVERHEAT SOME GENERATOR COMPONENTS BEFORE COMPONENTS FARTHER FROM THE HEAT REACH A SATISFACTORY TEMPERATURE.

4.5.2 Drying the generator winding insulation by the application of internal heat consists of operating the generator as described in the following procedure.

a. Check for excessive accumulation (pockets) of water on generator windings. Dry as much as possible with compressed air before applying internal heat.

b. Remove generator terminal box cover. Disconnect all voltage stator leads (1 through 12) from voltage regulator leads and load lines.

c. Connect generator stator leads together, to short circuit the stator windings.

d. In one of the generator leads, insert an ammeter of sufficient size to read full-load generator current.

e. Disconnect exciter field leads from F+ and F— terminals on the voltage regulator and connect a variable source of direct current to the exciter field leads.

f. Operate the generator at normal speed. Supply just enough excitation to cause rated current to flow in the generator stator windings.

g. Operate for sufficient time to ensure thorough drying of the windings. This can be determined by stopping the generator periodically and checking the insulation resistance of the windings. Insulation resistance checks at one-hour intervals are suggested. Terminate the drying-out process when measured resistance is within test standards (paragraph 4.4) and shows little change over a two to four hour period of operation.

4.6 TESTING BRUSHLESS EXCITER ROTATING RECTIFIERS WITH AN OHMMETER.

4.6.1 If a failure of the rectifier is suspected remove the generator cover and test rectifier with an ohmmeter as follows:

a. Remove nut and washer holding rectifier in heat sink and lift rectifier from heat sink. Refer to figure 4.3.

b. Refer to figures 4.1 and 4.3 then connect ohmmeter leads across rectifier in one direction and then the other direction. Note meter readings. The meter should indicate a low resistance in one direction and a high resistance in the other direction.

c. If meter indicates a low resistance in both directions the rectifier is shorted. A high resistance in both directions indicates an open rectifier.

d. Replace defective rectifiers with rectifiers of the same operating characteristics as the original parts. Order by part number and include the model and type of the exciter as well as the generator serial number.

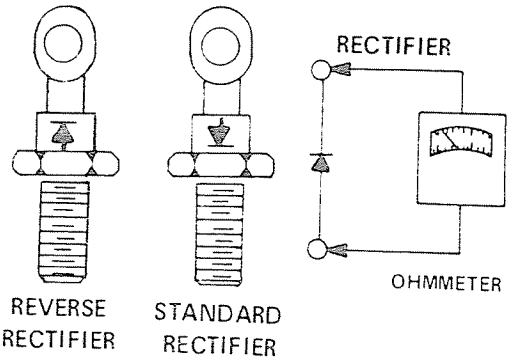

FIGURE 4-1 TESTING ROTATING RECTIFIERS WITH AN OHMMETER

4.7 TESTING BRUSHLESS EXCITER ROTATING RECTIFIERS WITH A TEST LAMP

4.7.1 If an ohmmeter is not available, field rectifiers may be tested with a test lamp consisting of standard flashlight batteries and a flashlight bulb as shown in figure 4-2. Refer to figures 4-1 and 4-3 for identification and then test as follows:

a. Remove nut and washer from rectifier and lift rectifier from heat sink.

b. Connect leads of tester across rectifier in one direction then reverse leads. The light should light when the leads are across the rectifier in one direction and should not light when placed across the rectifier in the other direction.

c. If the light lights in both directions the rectifier is shorted. If the light does not light in either direction the rectifier is open.

4.8 TESTING SURGE PROTECTOR WITH TEST LAMP

4.8.1 Disconnect one lead and check with lamp tester. The lamp should not light when the test leads are placed across the surge protector in either direction. If the lamp lights it indicates a shorted surge protector. Replace defective surge protector with one of the same operating characteristics as the original part. Order by part number and include the serial number of the generator.

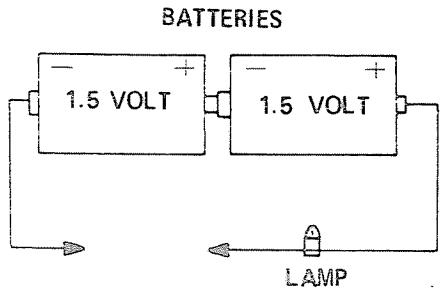

FIGURE 4-2 TEST LAMP

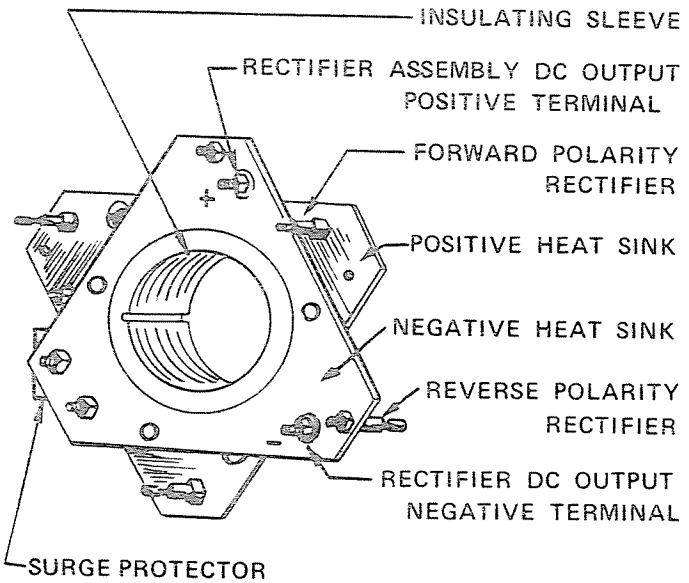

NOTE:
Three reverse polarity rectifiers located on negative heat sink.
Three forward polarity rectifiers located on positive heat sink.

FIGURE 4-3 FULL—WAVE ROTATING RECTIFIER ASSEMBLY

4.9 RESTORING RESIDUAL MAGNETISM

4.9.1 The direct current necessary to magnetize the alternator field is obtained from the exciter. Initially, upon starting the generator, current flow and voltage is induced into the exciter armature by the magnetic lines of force set up by the residual magnetism of the exciter field poles. Residual magnetism of the exciter field poles may be lost or weakened by a momentary reversal of the field connection, a strong neutralizing magnetic field from any source, or if the generator is not operated for a long period of time. To restore the small amount of residual magnetism necessary to begin the voltage buildup, connect a battery of from 6 to 32 volts to the exciter field coil circuit. Normally a battery of 6 to 12 volts is large enough. When the field windings have a high resistance (75-100 ohms) a larger battery voltage may be required. Connect the battery and flash field as follows:

a. Disconnect exciter field coil F2 (F+) at terminal F+ on the voltage regulator. Disconnect lead F1 (F—) at terminal F— on the voltage regulator.

b. Connect battery positive lead to field coil lead F2 (F+).

c. Start unit and bring up to rated speed.

d. Flash field by touching battery negative lead to field coil lead F1 (F—). Observe generator voltage buildup.

NOTE: Disconnect battery leads after approximately 3 to 5 seconds. If battery is connected for too long, overheating and subsequent damage to the exciter could occur.

e. Reflash field, steps (a) through (d), if generator output voltage does not build up.

f. Stop unit and reconnect field coil lead F2 (F+) to terminal F+on the voltage regulator. Reconnect lead F1 (F—) to terminal F— on the voltage regulator.

NOTE: If the polarity of the exciter is reversed by flashing the field, it may be corrected by interchanging the battery leads.

4.10 REMOVING BEARINGS

4.10.1 Remove the endbell to expose bearing. See "Disassembling Generator". Use a puller to remove the bearing from the shaft. Protect the shaft end with a cap. If bearing is to be used again, make certain puller applies pressure only against the bearing inner race. See figure 4-4.

4.11 INSTALLING BEARINGS

4.11.1 Heat the bearing to 250°F. in a clean temperature controlled circulating air oven. Start the heating bearing onto the shaft. Then use a fiber or soft metal sleeve to tap bearing into place. See figure 4-5. Make certain that pressure is applied only to the bearing inner race. Install bearing to point where inner race is against shoulder on shaft.

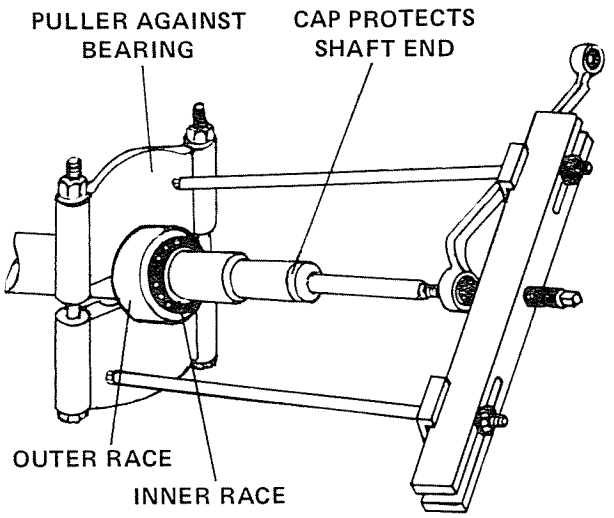

FIGURE 4-4 REMOVING BEARING

4.12 TROUBLESHOOTING

4.12.1 Troubleshooting is the process of recognizing malfunctions of the system, intelligently analyzing the malfunction, and making the necessary corrections to place the unit back into proper operation.

4.12.2 Between all regular preventive maintenance inspections be alert for any signs of generator set trouble. Common symptoms are listed in Table C. Correct any minor trouble immediately. Minor defects left uncorrected can cause serious damage which can result in costly repairs and down time.

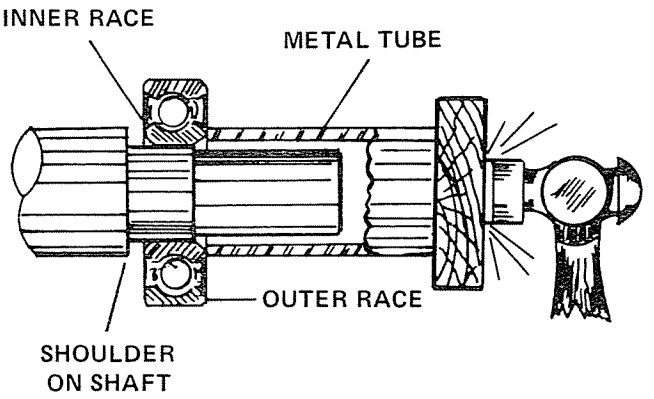

FIGURE 4-5 INSTALLING BEARING

TABLE C
TROUBLESHOOTING CHART

SYMPTOM	POSSIBLE CAUSES	REMEDY
No Voltage	Open circuit breaker of fuses (if voltage is sampled on load side of fuses or circuit breaker). Idle Switch set to idle position.	Check. Reset circuit breaker or replace fuses if open. Set Idle Switch to run position.
	Open circuit in exciter field.	Check out continuity of shunt field and leads to voltage control. (Use ohmmeter or Wheatstone bridge.) If open if field coils, remove exciter field assembly and return assembly to factory for repair.
	Loss of residual magnetism in the exciter field poles.	Adjust manual adjust potentiometer to full resistance. Flash field by making a flash connection of D.C. across terminals F1 to F2. See "Restoring Residual Magnetism"
	Open circuit in stator winding	Check for continuity in windings. Return to factory for repair if open.
	Malfunction of automatic voltage regulator.	See trouble shooting of voltage regulator.
	Short-circuited generator output leads.	Clear lead to restore voltage build up.
	Open in rotating rectifiers.	Check rotating rectifiers and replace if open.
	Open in alternator field.	Check for continuity and return rotor to factory for repair if field coils are open.
	Shorted rotating rectifiers.	Check shorts and replace if faulty.
	Shorted exciter armature.	Check for short, if faulty replace.
	Shorted leads between exciter armature and generator field.	Test and repair
Low Voltage	Engine Idle Switch set to idle position	Set switch to run position.
	Improper adjustment of voltage adjust rheostat or range adjust rheostat	Adjust rheostats. Refer to Section 3 "Operating Procedures."
	Excessive load	Reduce load. With 3 wire, single phase and 4 wire, three phase generators, the load on each leg should be as evenly balanced as possible and should not exceed the rated current on any leg.
	Line loss.	Increase size of line wire.
	High resistance connection. Connections will be warm.	Make better connections.
	Shorted field.	Test field coils for possible short by checking resistance with an ohmmeter or resistance bridge. Return rotor assembly to factory for repair if alternator field coils are shorted.

TABLE C - cont.

SYMPTOM	POSSIBLE CAUSES	REMEDY
Low Voltage (Cont.)	Low Power factor.	Reduce inductive (motor) load. Some AC motors draw approximately the same current regardless of load. Do not use motors of larger horsepower rating than is necessary to carry the mechanical load.
	Weak field due to operating in warm temperature.	Improve the ventilation of generator. Field current can be increased providing the generator temperature rating stamped on the nameplate is not exceeded.
	Improper voltage and/or frequency to drive motor causing low speed.	Check input voltage. Correct deficiencies. Check motor data plate for nominal operating values.
	Low speed due to improper belt adjustment on belt driven motor generator sets.	Align and adjust belt. Replace if worn excessively. Check for proper sheave size.
	Improper speed of engine driven generator set due to defective governor, ignition system, or carburetor.	Check and correct deficiencies.
Fluctuating Voltage	Voltage regulator not operating properly (if used).	Check regulator. Replace if defective.
	Prime mover speed fluctuating.	Check frequency and voltage of incoming power when generator set is motor driven. Engine governor on engine driven generator sets.
	Loose terminal or load connections.	Make better connections.
	Generator overloaded.	Reduce load to rated value.
	DC excitation voltage fluctuating.	Trace DC excitation circuit. Correct any defects.
High Voltage	Overspeed.	Correct speed of prime mover.
	Improper connection of generator.	Reconnect generator. Follow generator connection diagrams provided with the generator set.
	Improper adjustment of voltage adjust rheostat or range adjust rheostat.	Adjust rheostats. Refer to Section 3 Operating Procedures.
Overheating	Clogged ventilating screens and air passages.	Clean all screens and air passages.
	Dry or defective bearings.	Lubricate dry bearings. Replace defective bearings.
	Coupling misaligned or on belt driven generators, belt too tight.	Align generator set or adjust belt.
	Generator field coils shorted or grounded.	Test field coils for shorts. Replace shorted rotor or return to factory for repair.

TABLE C - cont.

SYMPTOM	POSSIBLE CAUSES	REMEDY
Vibration	Defective or dry bearing	Lubricate dry bearings. Replace defective bearings.
	Misalignment of generator and prime mover.	Align generator set.
	Generator not properly mounted.	Check mounting. Correct defective mounting.
	Transfer of vibration to generator from another source.	Isolate generator set from source of vibration by installing vibration dampeners between the generator set base and foundation.

4.13 TWO BEARING KAMAG 18 GENERATOR DISASSEMBLY INSTRUCTIONS

4.13.1 Refer to figure 4-6 and Table D for illustrated parts breakdown. Remove generator to prime mover coupling and then disassemble generator as follows:

1) Remove bolts holding endbells (3 and 17) to base. Remove generator from base.

2) Remove eyebolts (14) and bolts and nuts (15 and 16). Remove wrapper cover (13) from generator.

3) Remove terminal box cover and disconnect generator output leads and also field leads F— and F+. Remove any clips securing generator field leads to the generator frame (11).

4) Remove drive endbell bolts (18) and washers (19) from drive endbell (17). Pull endbell from generator.

5) Remove bolts (21) and washers (22) from fan (20). Remove fan. During assembly, position fan about ½ inch from baffle (12).

6) Remove bolts (1) and washers (2) from endbell (3). Pull endbell from generator.

7) If exciter field windings (4) require replacement, remove bolts (5) and washers (6) that secure the exciter field to endbell (3). During assembly, install exciter field assembly with leads toward endbell.

8) Remove rotor assembly (10) from frame and stator assembly (11).

9) If rectifiers (9a or 9b) require replacement, unsolder lead and then remove rectifier.

10) When replacing bearings (7 or 23), refer to procedures outlined in paragraphs 4.10 and 4.11.

4.14 SINGLE BEARING KAMAG 18 GENERATOR DISASSEMBLY INSTRUCTIONS

4.14.1 Refer to figure 4-7 and Table E for illustrated parts breakdown. Remove generator from engine mounting bolts and then dissassemble generator as follows:

1) Remove bolts holding endbell (3) and adapter (17) to base. Remove generator from base.

2) Remove eyebolt (14) and bolts and nuts (15) and (16). Remove wrapper cover (13).

3) Remove terminal box cover and disconnect generator output leads and also field leads F— and F+. Remove any clips securing field leads to the generator frame (11).

4) Remove endbell bolts (1) and washers (2) from endbell (3). Pull endbell from generator.

5) Remove rotor assembly (10) from drive end of generator frame (11).

6) If exciter field (4) requires replacement, remove bolts (5) and washers (6) then remove field from endbell (3). During assembly install exciter field with leads toward endbell.

7) Remove fan (20) from rotor by removing fan bolts (21) and washers (22). When unit is assembled, position fan about ½ inch from baffle (12).

8) If rotating rectifiers (9a or 9b) require replacement, unsolder lead wire and then remove rectifiers.

9) When replacing bearing (7), refer to the procedures outlined in paragraph 4.10 and 4.11.

TABLE D
PART DESCRIPTION TABLE FOR FIGURE 4-6 - TWO BEARING KAMAG 18 GENERATORS

KEY	DESCRIPTION	NO. REQUIRED
1	BOLT, retaining exciter endbell	4
2	WASHER, spring lock	4
3	ENDBELL, exciter end	1
4	EXCITER FIELD ASSEMBLY	1
5	BOLT, exciter field mounting	4
6	WASHER, spring lock	4
7	BEARING, exciter end	1
8	EXCITER ARMATURE	**
9	ROTATING RECTIFIER, Heat sink assembly	**
9a	RECTIFIER, forward polarity	3
9b	RECTIFIER, reverse polarity	3
9c	SURGE SUPPRESSOR	1
10	ROTOR ASSEMBLY	1
11	FRAME AND STATOR ASSEMBLY	1
12	AIR BAFFLE	1
13	GENERATOR WRAPPER COVER	1
14	LIFTING EYEBOLT	2
15	SCREW, round head	3
16	NUT, hex head	3
17	ENDBELL, drive end	1
18	BOLT, retaining, drive endbell	4
19	WASHER, spring lock	4
20	FAN	1
21	FAN BOLT	2
22	WASHER	2
23	BEARING, drive end	1

TABLE F
PART DESCRIPTION TABLE FOR FIGURE 4-7 - SINGLE BEARING KAMAG 18 GENERATORS

1	BOLT, retaining, endbell	4
2	WASHER, spring lock	4
3	ENDBELL, exciter end	1
4	EXCITER FIELD	1
5	BOLT, exciter, field mounting	4
6	WASHER, spring lock	4
7	BEARING, exciter end	1
8	EXCITER ARMATURE	**
9	ROTATING RECTIFIER, heat sink assembly	**
9a	RECTIFIER, forward polarity	3
9b	RECTIFIER, reverse polarity	3
9c	SURGE SUPPRESSOR	1
10	ROTOR ASSEMBLY	1
11	FRAME AND STATOR ASSEMBLY	1
12	AIR BAFFLE	1
13	GENERATOR WRAPPER COVER	1
14	LIFTING EYEBOLT	2
15	SCREW, round head	3
16	NUT, hex head	3
17	ADAPTOR	1
18	BOLT, adapter retaining	4
19	WASHER, spring lock	4
20	FAN ASSEMBLY	1
21	BOLT, hex head	2
22	WASHER, spring lock	2
23	COUPLING HUB	1
24	SPACERS	2*
25	DRIVE DISKS	2*
26	WASHERS, spring lock	8
27	BOLT, drive disk retaining	8
28	KEY, drive hub retaining	1

* Quantity dependent on engine & flywheel spacing.
** Not a "field" replaceable item. Part of rotor assembly.

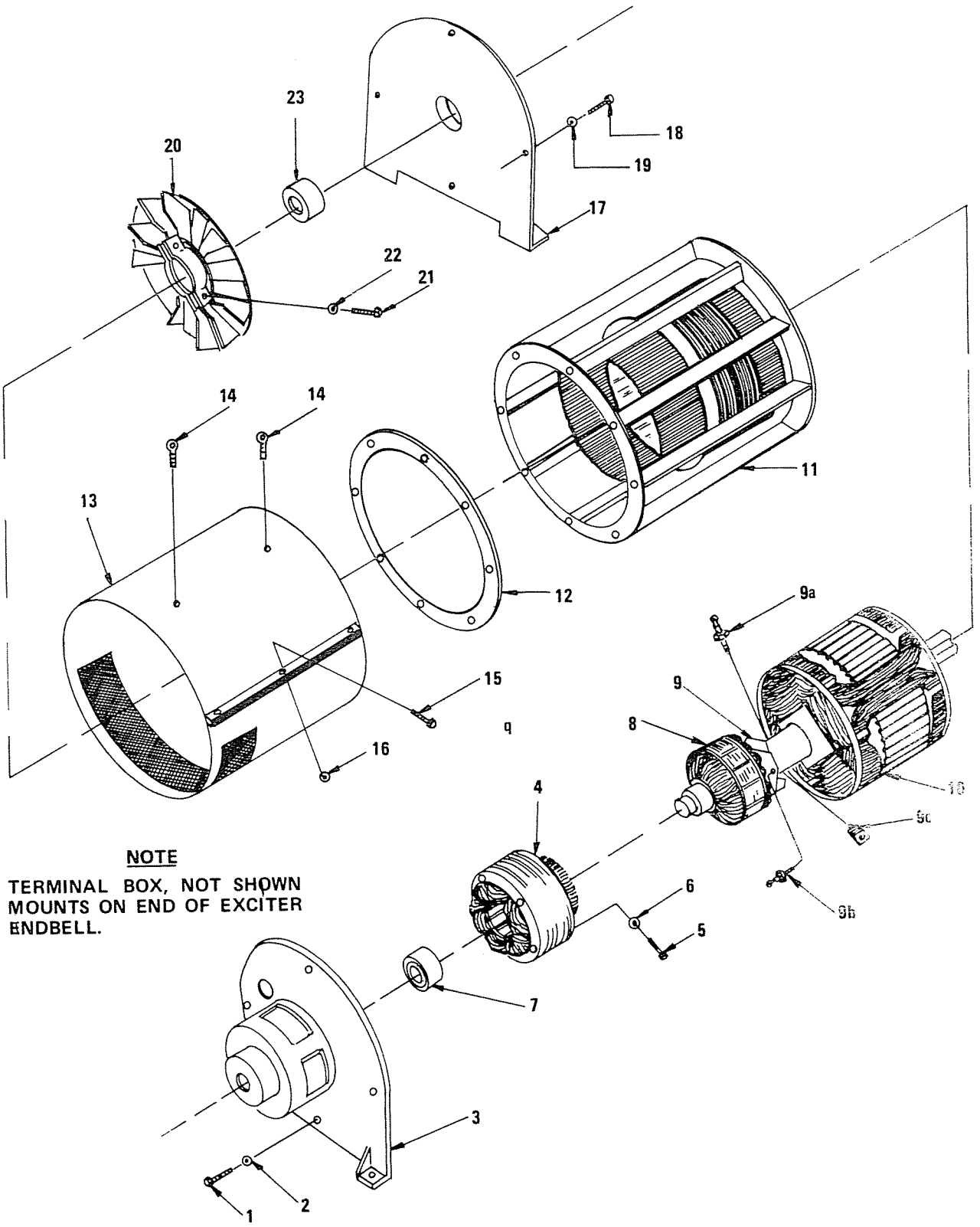

NOTE

TERMINAL BOX, NOT SHOWN MOUNTS ON END OF EXCITER ENDBELL.

FIGURE 4-6 - EXPLODED VIEW DRAWING, TWO BEARING KAMAG 18 GENERATOR

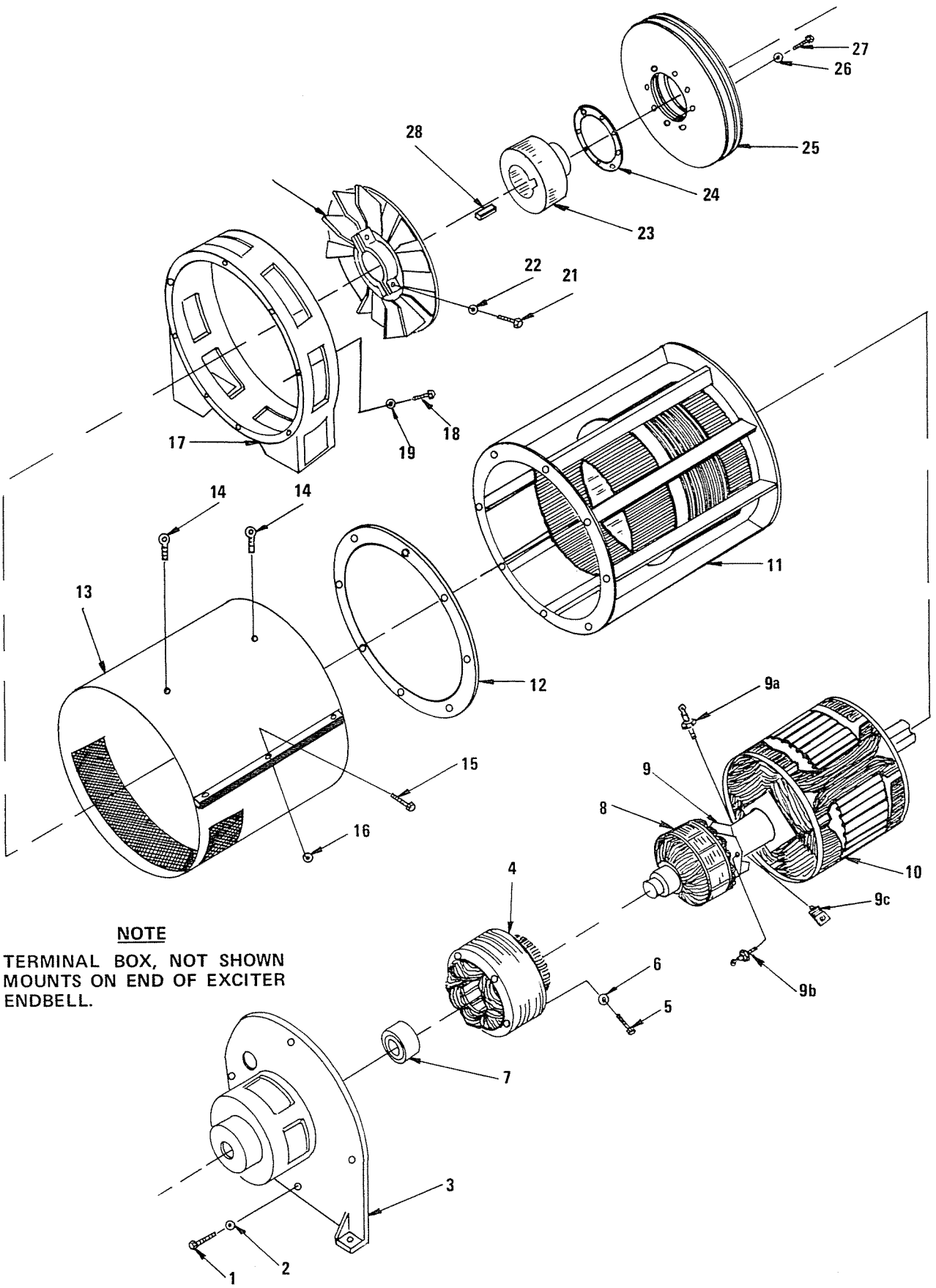

FIGURE 4-7 - EXPLODED VIEW DRAWING, SINGLE BEARING KAMAG 18 GENERATOR

1415 1st Avenue P.O. Box 47 / Mankato, Minnesota 56001 / (507) 625-4011 TLX: 29-0786 / **PN: 350-00002-00**

KATO ENGINEERING
RELIANCE ELECTRIC

Printed in U.S.A.

PUBLICATIONS NO. **INS-51C-65**
PUBLICATIONS DATE: **MARCH 1981**

REVOLVING FIELD ALTERNATING CURRENT GENERATORS WITH DIRECT CONNECTED BRUSH TYPE ROTATING DC EXCITERS

Installation -Operation and Maintenance Manual

KATO ENGINEERING
RELIANCE ELECTRIC

IDENTIFY YOUR GENERATOR BY THE FOLLOWING NUMBERS:

SERIAL NUMBER _____ **MODEL** _____ **TYPE** _____

The KATO drawings listed below are included to aid in installing, operating and maintaining your generator. Keep them with this instruction manual at all times.

Wiring Connection Drawings: _____ _____

_____ _____

Parts Drawing: _____

The purpose of this manual is to provide the user of KATO REVOLVING FIELD ALTERNATING CURRENT GENERATORS with DIRECT CONNECTED BRUSH TYPE ROTATING DC EXCITERS with the information required to install, operate, and maintain the generator

Your KATO Generator is a carefully designed, rugged machine. Only components which have proven best in reliability and performance are used. Each generator has been completely tested and inspected before shipment from the KATO factory.

Treat your generator with normal care while installing, operating and maintaining the unit and it will provide many years of very good service.

Publications Number INS-51C-65
Revised March 1972

TABLE OF CONTENTS

SECTION 1 INTRODUCTION & DESCRIPTION

	Paragraph	Page
INTRODUCTION	1.1	1
GENERAL DESCRIPTION	1.2	1
CONSTRUCTION	1.3	1

SECTION 2 INSTALLATION

RECEIVING INSPECTION	2 1	4
UNPACKING AND STORAGE	2.2	4
LOCATION	2.3	4
ASSEMBLING SINGLE BEARING GENERATOR TO ENGINE	2.4	5
SELECTION OF DRIVES FOR TWO-BEARING GENERATOR	2.5	8
BELT DRIVES - GENERAL INFORMATION	2.6	8
V - BELT	2.7	8
FLAT BELT	2.8	8
GEAR BELTS (TIMING BELTS)	2.9	8
GEAR AND FLEXIBLE COUPLINGS-GENERAL INFORMATION	2.10	9
GEAR DRIVE	2.11	10
INSTALLATION AND ALIGNMENT OF FLEXIBLE COUPLED DRIVES	2.12	10
FLYWHEEL AND TWIN DISC CLUTCH COUPLING	2.13	11
INSTALLATION OF KATO VIBRATION DAMPENERS (KATO BASE MOUNTING FEET)	2.14	11
VIBRATION	2.15	11
DOWELING	2.16	12
ELECTRICAL CONNECTIONS	2.17	12
PROTECTIVE DEVICES	2.18	12

SECTION 3 OPERATION

PRE-OPERATION EQUIPMENT CHECK	3.1	13
INITIAL START	3.2	13
SINGLE GENERATOR OPERATING INSTRUCTIONS	3.3	13
OPERATION OF STANDBY GENERATOR	3.4	14
OPERATING INSTRUCTIONS FOR PARALLEL OPERATION OF GENERATORS	3.5	14
PHASE ROTATION	3.6	14
SYNCHRONIZING PARALLELED GENERATORS	3.7	14
DIVISION OF POWER LOAD AMONG PARALLELED GENERATORS	3.8	15
DIVISION OF REACTIVE KVA AMONG PARALLELED GENERATORS	3.9	15

SECTION 4 MAINTENANCE

PREVENTIVE MAINTENANCE	4.1	16
CLEANING	4.2	16
WINDINGS - PROTECTION	4.3	16
INSULATION RESISTANCE TEST	4.4	16
DRYING WINDINGS	4.5	17
STATOR WINDING SHORT CIRCUIT TEST	4.6	17
MAINTENANCE OF BRUSHES, BRUSH HOLDERS, SLIPRINGS AND COMMUTATORS	4.7	17
REPLACING BRUSHES AND ADJUSTING BRUSH SPRING TENSION	4.8	18
SEATING BRUSHES	4.9	18
TURNING SLIPRINGS	4.10	18
SANDING COMMUTATOR	4.11	18
TURNING COMMUTATORS	4.12	18
UNDERCUTTING COMMUTATOR	4.13	18
BEARINGS (INCLUDING LUBRICATION INSTRUCTIONS)	4.14	19
BEARING REMOVAL	4.15	19
BEARING INSTALLATION	4.16	19
TROUBLESHOOTING	4.17	19
DISASSEMBLY OF SINGLE BEARING GENERATOR	4.18	23
DISASSEMBLY OF TWO BEARING GENERATOR	4.19	23
ORDERING RENEWAL PARTS	4.20	23
WARRANTY		26

LIST OF ILLUSTRATIONS

SECTION 1 INTRODUCTION & DESCRIPTION

Page

FIGURE 1-1 TYPICAL "SEALED" BEARINGS & BEARING HOUSING CONSTRUCTION 2
FIGURE 1-2 TYPICAL "REGREASABLE" BEARINGS & BEARING HOUSING CONSTRUCTION 2
FIGURE 1-3 REVOLVING FIELD GENERATOR WITH DIRECT CONNECTED BRUSH TYPE EXCITER – VOLTAGE AUTOMATICALLY REGULATED BY VOLTAGE REGULATOR 3
FIGURE 1-4 REVOLVING FIELD GENERATOR WITH DIRECT CONNECTED BRUSH TYPE EXCITER – VOLTAGE INHERENTLY REGULATED 3

SECTION 2 INSTALLATION

FIGURE 2-1 BRUSH RAISED IN BRUSH HOLDER 5
FIGURE 2 2 CHECKING ENGINE FLYWHEEL RUNOUT 6
FIGURE 2-3 CHECKING ENGINE FLYWHEEL HOUSING RUNOUT 6
FIGURE 2-4 CHECKING SPACING FROM GENERATOR ADAPTER TO OUTSIDE OF DRIVE DISKS (DIM. "Y") 7
FIGURE 2-5 CHECKING SPACING FROM BOLTING SURFACE OF ENGINE FLYWHEEL HOUSING TO BOTTOM OF THE DRIVE DISK RECESS IN FLYWHEEL (DIM. "C") 7
FIGURE 2-6 TYPICAL DRIVE DISK TO FLYWHEEL INSTALLATION 8
FIGURE 2-7 CHECKING GENERATOR SHAFT RUNOUT 8
FIGURE 2-8 TESTING ANGULAR ALIGNMENT OF MOTOR AND GENERATOR SHAFTS 9
FIGURE 2-9 TESTING ANGULAR ALIGNMENT OF MOTOR AND GENERATOR SHAFTS FOLLOWING COUPLING INSTALLATION 9
FIGURE 2-10 TESTING PARALLEL ALIGNMENT OF MOTOR AND GENERATOR SHAFTS 9
FIGURE 2-11 TESTING PARALLEL ALIGNMENT OF MOTOR AND GENERATOR SHAFTS FOLLOWING COUPLING INSTALLATION 9
FIGURE 2-12 CHECKING ALIGNMENT OF TWIN DISC COUPLING 10
FIGURE 2-13 KATO BASE FOOT VIBRATION DAMPENERS. 11
FIGURE 2-14 KATO VIBRATION ISOLATORS 11

SECTION 3 OPERATION

FIGURE 3-1 SYNCHRONIZING PARALLELED GENERATORS USING TEST LAMPS 14

SECTION 4 MAINTENANCE

FIGURE 4-1 BRUSH RAISED IN BRUSH HOLDER 17
FIGURE 4-2 UNDERCUT COMMUTATOR 19
FIGURE 4-3 REMOVING BEARING FROM GENERATOR SHAFT 19
FIGURE 4-4 INSTALLING BEARING ON GENERATOR SHAFT 19
FIGURE 4-5 CROSS SECTION VIEW, TYPICAL KATO REVOLVING FIELD SINGLE BEARING AC GENERATOR with DIRECT CONNECTED BRUSH TYPE DC EXCITER 24
FIGURE 4-6 CROSS SECTION VIEW, TYPICAL KATO REVOLVING FIELD TWO - BEARING AC GENERATOR with DIRECT CONNECTED BRUSH TYPE DC EXCITER 25

LIST OF TABLES

TABLE 2-1 ALLOWABLE FLYWHEEL AND DRIVE DISK RECESS RUNOUT 6
TABLE 4-1 QUARTERLY PREVENTIVE MAINTENANCE SCHEDULE 16
TABLE 4-2 TROUBLESHOOTING CHART 20

SECTION 1 INTRODUCTION & DESCRIPTION

1.1 INTRODUCTION

1.1.1 This manual contains instructions for installing, operating, and maintaining KATO Revolving Field Generators which are excited from a direct connected brush type rotating DC exciter. Also included are descriptions of the basic construction and general description of this series of generators. Instructions pertaining to installation, operation, and maintenance of the voltage regulator when used are included in the manual supplied by the manufacturer of the voltage regulator.

1.1.2 Electrical connection drawings for the specific model, type, and serial number of the generator are contained as supplementary information in a separate part of the generator manual. These drawings are the official source of information for making electrical connections or ordering replacement parts.

1.2 GENERAL DESCRIPTION

1.2.1 The alternating current generators described in this manual are of the revolving field type which have direct connected brush type rotary DC exciters. This manual describes generators of single or two bearing construction. Single bearing generators are designed for direct coupling to a stationary prime mover and two bearing generators are designed for gear, belt, or flexible coupling to a stationary prime mover. The generators are manufactured in many sizes and ratings.

1.2.2 Generator field excitation is supplied from a direct connected brush type rotary DC exciter. Regulation of the generator output voltage is accomplished by controlling the alternator field excitation current supplied by the exciter.

1.2.3 Control of the generator output is normally accomplished by using a variable resistor or rheostat in the DC exciter shunt field. The voltage adjust rheostat normally allows adjustment of generator output voltage from approximately 90 percent to 110 percent of the nominal output voltage rating. See figure 1-4, page 3.

1.2.4 When a voltage regulator is used, the output voltage of the generator is automatically controlled. The regulator senses changes in the generator output and varies the DC fed to the exciter field accordingly. An auto-voltage adjust rheostat or a variable transformer is usually incorporated in the voltage regulator circuitry to allow selection of any specific output voltage within the range of from about 90 percent to about 110 percent of the generator nominal output voltage rating. Cross current or voltage droop compensation circuitry for parallel operation of generators is available for most models of voltage regulators. See figure 1-3, page 3.

1.2.5 The generators may be supplied with various custom controls designed to provide the users power needs. Controls can be contained in separate wall mounted cubicles, in free standing control cubicles, or in a control box mounted to the generator. Mounting is dependent on the number and size of the controls or the customer's specifications.

1.2.6 All controls used on Kato Generator Sets are those which have proved, during many years of service, to be the most reliable. Should replacement of a control device be necessary, a complete line of replacement controls can be supplied by Kato Engineering Company with a minimum of "waiting" time. When generators are used as vital power units it is recommended that spare control devices such as voltage regulators be kept on hand at all times. Should a failure of these vital devices occur, install the spare and return the defective assembly to Kato Engineering Company for repair.

1.3 CONSTRUCTION

1.3.1 KATO Generators are designed by an expert power engineering staff to provide your power needs. All machines are carefully designed and constructed to ensure trouble free operation and maximum service life. The sturdy frame is fabricated of heavy steel members welded to the endbell pilot rings. A heavy steel base is welded to the frame assembly to simplify installation and alignment of the generator with the prime mover. Eyebolts installed in the frame enable the complete generator to be lifted with a conventional overhead hoist. A heavy steel wrapper cover of drip-proof construction encloses the frame assembly.

1.3.2 The generator stator core is constructed of one-piece steel laminations. The steel laminations are assembled under pressure to form the stator core. The assembled core is rigidly welded to the frame ribs. Heavily insulated stator coils of highest quality magnet copper are inserted in the stator slots. Stator core slots are lined with highest quality insulating material. The complete stator assembly is impregnated with electrical varnish and baked several times to ensure excellent bonding qualities, high dialectric strength, and maximum moisture resistance. Stator leads on most units are brought out to a convenient junction box located on the generator frame. The leads terminate in standard connection lugs or strap copper terminals for ease of connection to the load lines.

Katolight Service - Master Repair Manual - Page 501

1.3.3 The generator field poles are mounted on a large diameter shaft. Field coils of heavily insulated wire are machine wound directly onto poles with insulating varnish or the new "extra strength" epoxies applied between each layer. Damper windings, consisting of heavy copper bars imbedded in the poles are standard on Kato revolving field generators. Their purpose is to keep damping current losses low and limit increase of third harmonic voltage with increase of load. The damper windings also prevent "hunting" during parallel operation of generators. The enitre rotor is dipped and baked to form one complete, homogeneous mass.

1.3.4 A heavy duty rotating DC exciter is directly connected to the generator. The exciter field bolts to the generator endbell and the exciter armature slides into place on an extension of the generator shaft. The exciter armature is normally aligned and locked in place on the generator shaft by either a key or by aligning a lug on the exciter armature with a slot in the generator shaft. Final locking is accomplished by a retaining bolt and washer. Heavy duty exciter armature windings, commutator and brush rigging assure excellent performance of the exciter. The complete exciter is covered by a removable drip-proof cover.

1.3.5 Generator excitation voltage is fed from the exciter to the generator field through sliprings and brushes. Heavy duty construction of sliprings and brush rigging emsures maximum commutation and service life of the sliding contacts. Under normal operating conditions the only maintenance of the brush rigging normally required is keeping the sliprings, commutator and brushes clean, and replacing brushes when worn excessively.

1.3.6 KATO single and two bearing generators are designed with a self contained cooling system which circulates air through the machine. Ambient air is drawn into the machine through louvered openings by a large capacity blower. The warm air is exhausted through the screened opening enclosing the blower assembly.

1.3.7 Most KATO generators under 75 KW in size have "sealed" ball bearings which do not require periodic lubrication. Most KATO generators over 75 KW in size have grease fittings in the bearing housing and have bearings which should be periodically lubricated. Refer to Section 4, paragraphs 4.14 through 4.14.2.

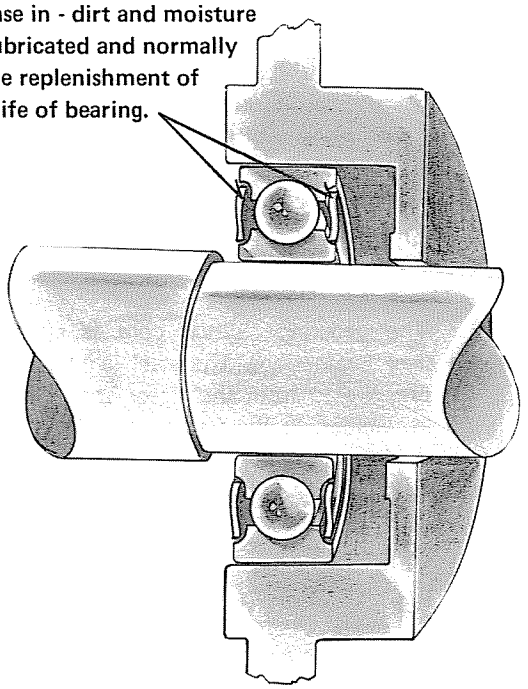

FIGURE 1-1 TYPICAL "SEALED" BEARINGS & BEARING HOUSING CONSTRUCTION.

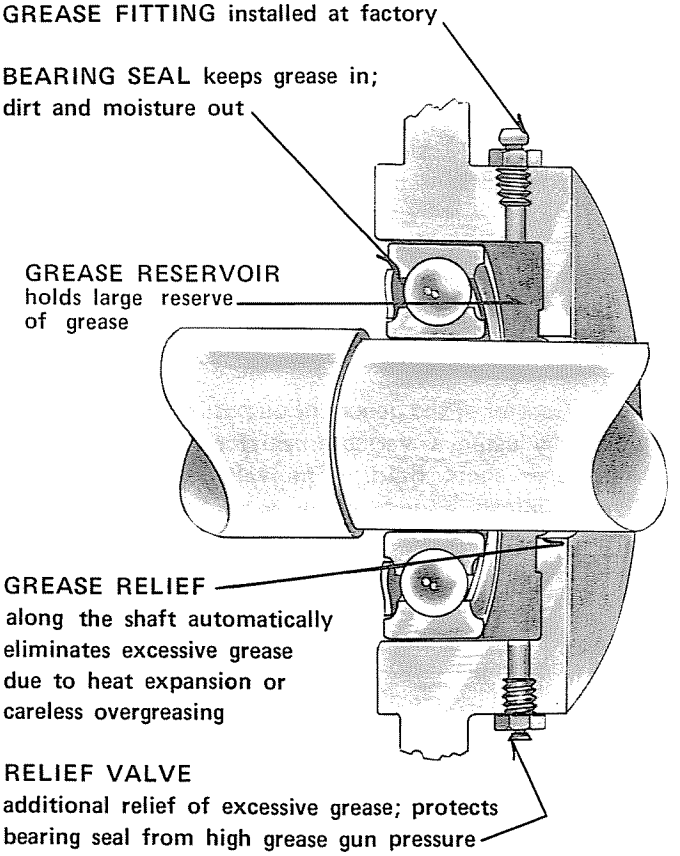

FIGURE 1-2 TYPICAL "REGREASABLE" BEARING & BEARING HOUSING CONSTRUCTION.

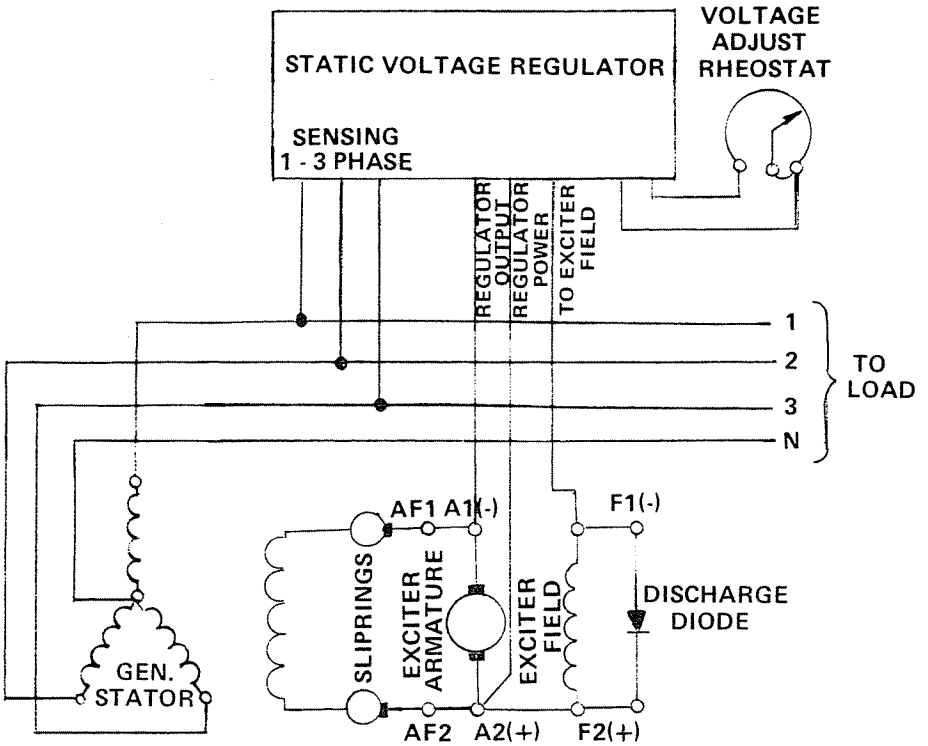

FIGURE 1-3 REVOLVING FIELD GENERATOR WITH DIRECT CONNECTED BRUSH TYPE DC EXCITER – VOLTAGE AUTOMATICALLY REGULATED BY VOLTAGE REGULATOR.

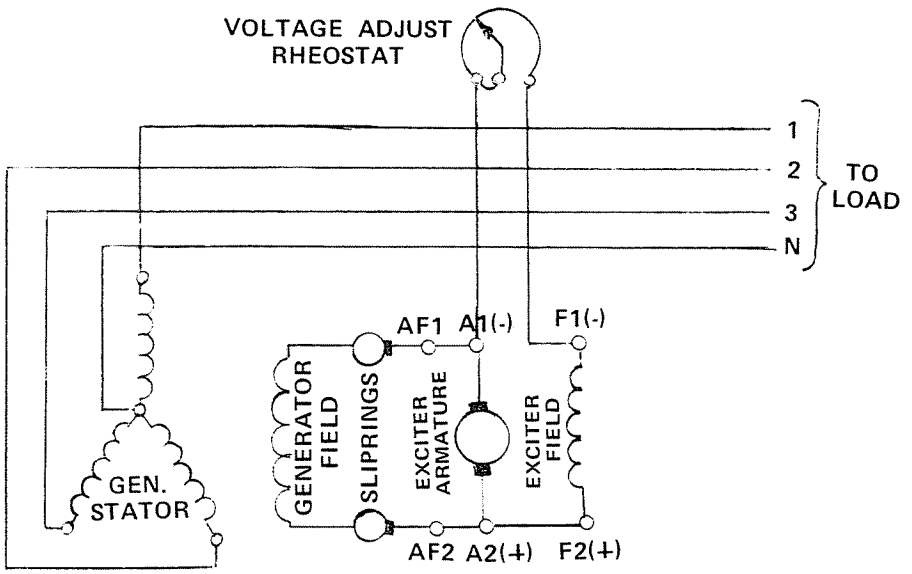

FIGURE 1-4 REVOLVING FIELD GENERATOR WITH DIRECT CONNECTED BRUSH TYPE DC EXCITER – VOLTAGE INHERENTLY REGULATED.

SECTION 2 INSTALLATION

2.1 RECEIVING INSPECTION

2.1.1 The generator is carefully packed and crated for shipment, and can withstand most shocks incurred during transit. Before accepting shipment from the transportation company examine the crating carefully to determine if any damage has occurred during shipment. Unpack the unit as described in paragraph 2.2 and then carefully examine the sheet metal frame cover and exciter cover for signs of damage. Remove the exciter cover and fan screen and examine the inside of the generator for signs of damage to windings, lead wires, and other internal parts. Inspect for loosely mounted components and the presence of moisture. Inspect to make certain foreign material such as crating nails, loose bolts, or packing material which may have fallen into the machine during unpacking are removed. On two-bearing machines turn the rotor by hand to make certain it rotates freely without binding. If damage is noted, determine the extent of damage and immediately notify the transportation company claims office and Kato Engineering Company. Be sure to give complete and accurate details when reporting damage.

2.1.2 If the generator is to be placed in storage repackage and crate the generator set. Recommended procedures for storage are contained in paragraph 2.2.

NOTE: **Single bearing generators are usually shipped with brushes raised in brush holders to prevent damage to brushes during shipment and installation. DO NOT LOWER BRUSHES IN BRUSH HOLDERS UNTIL INSTALLATION OF GENERATOR TO ENGINE IS COMPLETE.**

2.2 UNPACKING AND STORAGE

2.2.1 If the generator is received during cold weather, let the crated unit stabalize to room temperature before removing the protective crating and packing material. This precaution will minimize the condensation of moisture on coil surfaces, eliminating the possibilities of wet windings and insulating materials which could cause early malfunctions of the generator.

2.2.2 Unpack the generator with care to avoid damage to the unit. Move the generator to the mounting location by attaching an overhead hoist to the eye-bolts installed in the generator frame. Determine that the hoist, when used, is of sufficient strength to adequately support the weight of the generator. Hoist and hoist cables should have a rating of not less than 1½ times the weight of the generator.

CAUTION

ALWAYS MAKE CERTAIN EXTREME CARE IS TAKEN WHEN MOVING THE GENERATOR TO PREVENT ITS STRIKING OTHER OBJECTS OR PERSONNEL. NEVER APPLY A LIFTING FORCE TO STRUCTURAL POINTS OTHER THAN THOSE PROVIDED FOR THAT PURPOSE.

2.2.3 If the generator is not to be installed in its operating location as soon as received, it should be stored in a clean, dry area, not subject to sudden temperature or humidity changes. If possible, storage should be in an ambient temperature of approximately normal room temperature. Units which cannot be stored in a temperature and humidity controlled area and which are to be in storage for a period of longer than six months should be prepared for storage by installing desiccant bags under the exciter cover and inside the terminal box and vacuum sealing the unit in a covering of plastic or other material designed for that purpose. The unit should be adequately tagged to ensure that desiccant bags are removed before the unit is placed in operation.

2.3 LOCATION

2.3.1 The synchronous generator can be installed in a well ventilated area which affords sufficient accessibility for operation and maintenance of the unit and which allows a sufficient unobstructed flow of coolant air. Avoid locations which would subject the generator to excessive moisture, dust, steam or the funes from acids, alkalines or other corrosive chemicals. If such exposure cannot be avoided, establish a rigid periodic maintenance schedule. The adverse effect of excessive moisture can usually be eliminated or at least greatly lessened by the use of space or strip heaters.

2.3.2 The foundation or supports which mount the generator and prime mover must be rigid, level and of ample size and strength to support the weight of the generator and prime mover. Although a reinforced concrete foundation usually makes the best foundation for heavy machinery, the generator and prime mover may be placed on any concrete, steel or other structural material which will adequately support the weight of the unit. Bearing loads of structural materials can be obtained by referring to engineering handbooks.

Katolight Service - Master Repair Manual - Page 504

2.4 ASSEMBLING SINGLE BEARING GENERATOR TO ENGINE

2.4.1 The generator and engine should be mounted on a rigid steel base. Paragraph 2.4.2, steps (a) through (q) describe the major precautions and steps necessary to ensure satisfactory installation of the generator to the engine. They are listed in the order that the assembly work should be performed.

2.4.2 Slight differences exist between the various models and types of Kato Generators within the series described in this manual. Personnel assembling the generator to the engine must make certain that any assembly prodecures necessary to completely install the generator to the engine is done, even though some of the work which must be performed when assembling the generator to the engine may not be described in the following steps.

a. Before assembling generator to engine, remove exciter and generator covers and raise the exciter and generator brushes in their holders as shown in figure 2-1.

b. Before assembling generator to the engine, check to make certain generator bearing end clearance is sufficient. **GENERATOR BEARING END CLEARANCE SHOULD NOT BE LESS THAN: TOTAL ENGINE CRANKSHAFT AXIAL MOVEMENT + 1/16 in.**

NOTE

Generator shipped from factory with approximately 1/8 inch bearing end clearance.

c. Before starting to assemble the generator to the engine, mount the base of a dial indicator on the engine flywheel housing (bellhousing) and position the indicator finger on the drive disk recess of the flywheel as shown on figure 2-2. Set the dial indicator to zero. Turn the engine through one complete revolution. **TOTAL INDICATOR READING SHOULD NOT EXCEED .003-inch per EACH FOOT OF DIAMETER OF THE FLYWHEEL.** See TABLE 2-1.

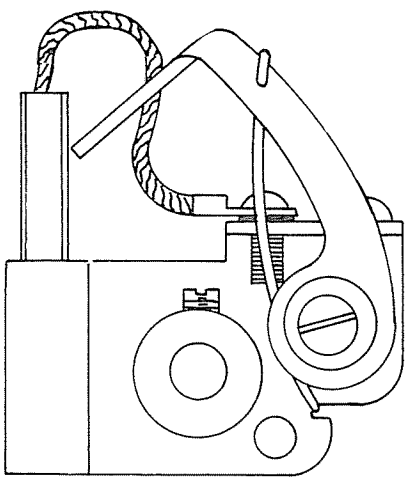

FIGURE 2-1 BRUSH RAISED IN BRUSH HOLDER.

If reading exceeds allowable limits excessive vibration could result. Contact the engine manufacturer for recommendations if runout exceeds suggested limits.

NOTE

The flywheel drive disk recess may have to be machined if runout is excessive. If the flywheel requires machining and it is not practical to remove the flywheel from the engine shaft, contact KATO Engineering Company, Parts and Service Department, requesting information pertaining to KATO tooling available on a rental basis, which will permit turning the flywheel without removing it from the engine.

d. Before starting to assemble the generator to the engine, mount the base of a dial indicator on the center of the flywheel and position the finger of the indicator on the machined surface of the flywheel housing (bellhousing) which bolts to the generator adapter. See figure 2-3. Set the dial indicator to zero. Turn the engine through one complete revolution. **TOTAL INDICATOR READING SHOULD NOT EXCEED .003-INCH PER EACH FOOT OF DIAMETER OF THE FLYWHEEL HOUSING.** See TABLE 2-1. If reading exceeds the allowable limit excessive vibration could result. Contact the engine manufacturer for recommendations if runout exceeds .003-inch per foot of diameter of the flywheel housing.

e. Before starting to assemble the generator to engine, measure the distance from the surface on the generator adapter that bolts to the engine flywheel housing (Dimension "Y", figure 2-4). Measure the distance from the machined surface on the engine flywheel housing to the bottom of the drive disk recess in the flywheel (Dimension "C", figure 2-5).

DIMENSION "C" MUST EQUAL "Y"

If the distance from the flywheel housing to drive disk recess "C" is more than the distance from the generator adapter to drive disks "Y", install additional spacers between the drive disks and the generator drive hub. If "Y" is more than "C" remove spacers located between the drive disks and generator drive hub.

f. Make certain drive disks "seat" in the drive disk recess.

WARNING

NEVER GRIND O.D. OF DRIVE DISKS AND NEVER ATTEMPT TO "DRILL OUT" HOLES IN DRIVE DISKS. IF DRIVE DISKS DO NOT FIT PROPERLY, ORDER NEW DRIVE DISKS. INCLUDE DIMENSIONAL DATA OF FLYWHEEL.

g. Use lock washers on all bolts used to secure generator to engine and base.

h. If the bolts that secure the drive disks to the flywheel cannot be installed due to insufficient clearance between fan and drive disks, it may be necessary to loosen and move fan.

NOTE

If bolts that secure the drive disks to the flywheel cannot be tightened with a socket or box wrench, using 1/4 - inch to 3/8 - inch long spacers inserted on the bolts as shown in figure 2-6 will increase the clearence between the bolt heads and the flywheel.

TABLE 2-1

FLYWHEEL DRIVE DISK RECESS		
Pilot Diameter	Nominal Clutch Dia.	Allowable Run Out (Total Indicator Reading)
6½	8.500	.002
7½	9.500	.002
8	10.375	.002
10	12.375	.003
11½	13.375	.003
14	18.375	.004
16	20.375	.005
18	22.500	.005
21	26.500	.006
24	28.875	.007

FLYWHEEL HOUSING		
SAE Housing Number	Housing Inside Dia.	Allowable Run Out (Total Indicator Reading)
6	10.500	.002
5	12.375	.003
4	14.250	.003
3	16.125	.004
2	17.625	.004
1	20.125	.005
½	23.000	.005
0	25.500	.006
00	31.000	.007

CAUTION

IF FAN IS MOVED, MAKE CERTAIN THAT BEFORE GENERATOR SET IS PLACED IN OPERATION FAN IS POSITIONED WITH ABOUT ½-INCH CLEARANCE BETWEEN FAN AND BAFFLE AND ALL FAN BOLTS ARE INSTALLED AND TIGHTENED.

i. Make certain generator mounting pads contact the base evenly and with equal pressure. Use of shims may be required.

j. After generator is assembled to the engine; but before installing the fan screen or placing generator set in operation, check run out of the generator shaft. Check run out by placing the base of a dial indicator on a generator frame rib and positioning the indicator finger on the generator shaft as shown in figure 2-7. Set dial indicator to zero. Turn generator through at least one revolution. TOTAL INDICATOR READING SHOULD NOT EXCEED .005 - INCH. See NOTE on page 7.

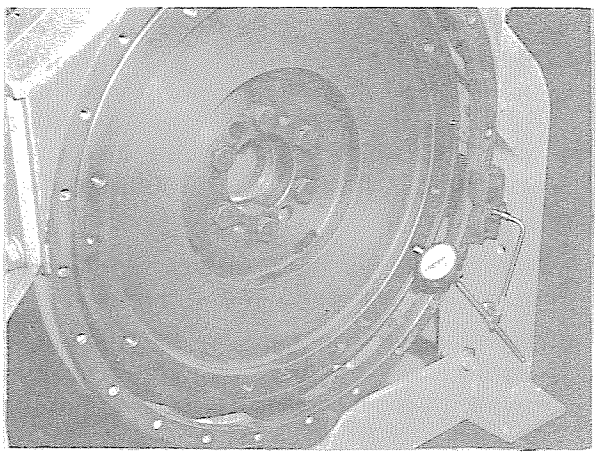

FIGURE 2-2 CHECKING ENGINE FLYWHEEL RUNOUT

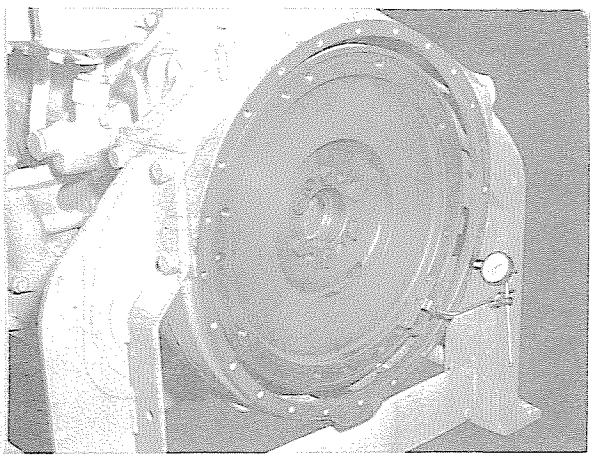

FIGURE 2-3 CHECKING ENGINE FLYWHEEL HOUSING RUNOUT

NOTE

Use inspection mirror to read indicator. It may be necessary to move fan out of the way. See CAUTION following step h.

k. After generator is assembled to engine, but before placing the generator set in operation, go back and make certain all bolts that secure the generator to the engine and the base are tight. Check to make certain generator fan is positioned with approximately ½-inch clearance between fan and fan baffle and check all fan bolts to make certain they are tight.

l. Before placing generator set in operation, visually inspect clearance between generator stationary and rotating parts.

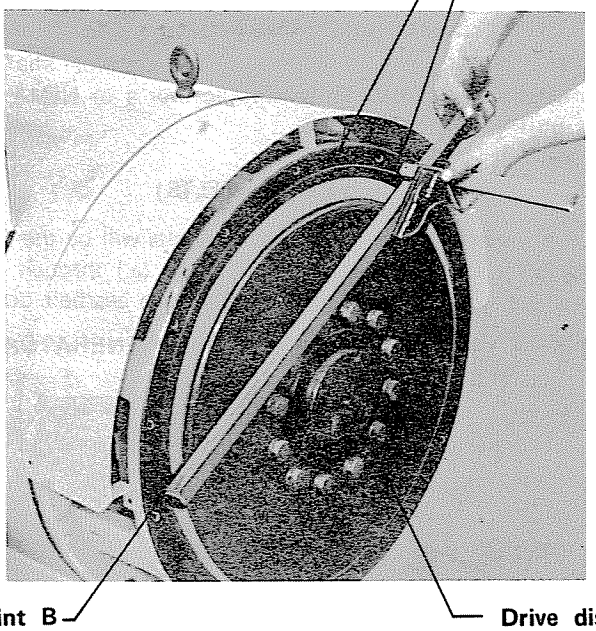

Using a straight edge and depth gauge or machinists scale measure from a straight edge placed on the outside of the drive disks to the machined surface on the generator adapter which bolts to the engine flywheel housing (dimension "Y"). Place straight edge close to bolts which secure drive disks to drive hub.

For a more accurate measurement measure at point A and point B and divide by 2.

FIGURE 2-4 CHECKING SPACING FROM GENERATOR ADAPTER TO OUTSIDE OF DRIVE DISKS (DIM. "Y")

m. If the exciter armature is not installed, slide it completely onto generator shaft and install retaining bolt and washer.

CAUTION

IF EXCITER HAS AN ALIGNING KEY MAKE CERTAIN KEY IS IN PLACE BEFORE INSTALLING EXCITER ARMATURE.

n. Lower exciter and generator brushes in brush holders. Make certain they are seated and centered on the commutator and the collector rings (slip rings). Make certain exciter brushes and brush holders are clear of commutator riser.

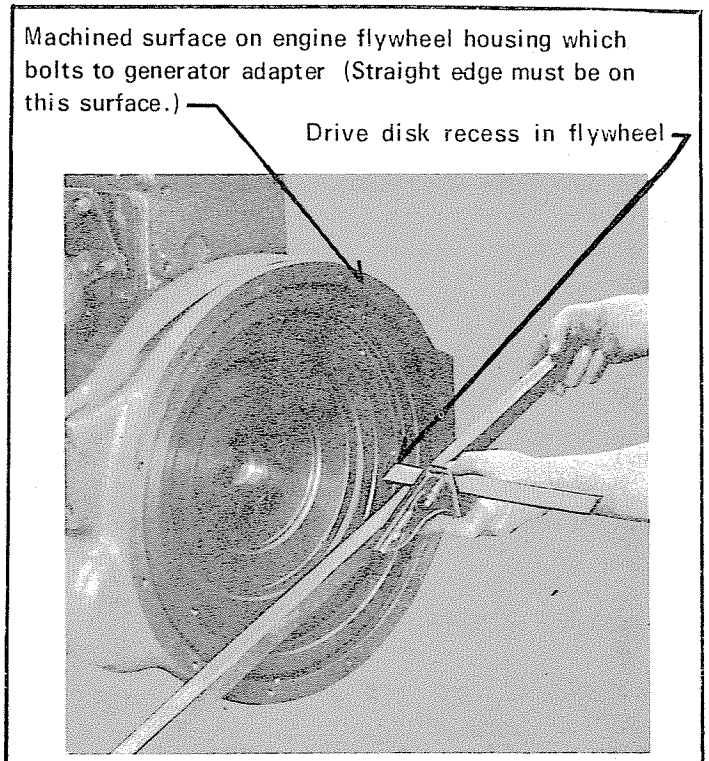

Using a straight edge and depth gauge or machinists scale measure from the drive disk recess in flywheel to straight edge placed across the machined surface on the engine flywheel housing (Dimension "C").

NOTE

If the flywheel housing has a pilot which extends beyond the bolting surface on the flywheel housing and the straight edge is layed across the pilot, subtract the distance from the pilot to the bolting surface of flywheel housing.

FIGURE 2-5 CHECKING SPACING FROM BOLTING SURFACE OF ENGINE FLYWHEEL HOUSING TO BOTTOM OF THE DRIVE DISK RECESS IN FLYWHEEL (DIM. "C")

o. Before placing generator set in operation, turn engine through several revolutions, but do not permit engine to start. Visually inspect clearance between generator stationary and rotating parts. Check alignment of the exciter armature with exciter field poles. Listen for unusual noises such as produced by parts rubbing together.

p. When assembly has been satisfactorily completed and inspected, install covers and guards.

q. Start and stop the generator set several times. Listen for unusual noises, vibration or any other abnormal conditions. See Section 3, paragraphs 3.1 and 3.2.

2.5 SELECTION OF DRIVES FOR TWO - BEARING GENERATOR

2.5.1 Satisfactory generator operation will depend upon intelligent selection of drive couplings. In general, solid couplings are not recommended except when the generator and prime mover frames are directly connected and belt drives should not be used when belt speed exceeds 5000 feet per minute.

2.6 BELT DRIVES - GENERAL INFORMATION

2.6.1 Proper alignment and tightness of belt drives is essential. Improper alignment and belt tightness will increase belt wear as well as increase bearing loads and vibration. Select belt drive in accordance with belt manufacturer's specifications. Make certain generator and prime mover are rigidly mounted. In general belt drives are not recommended when belt speed exceeds 5000 feet per minute.

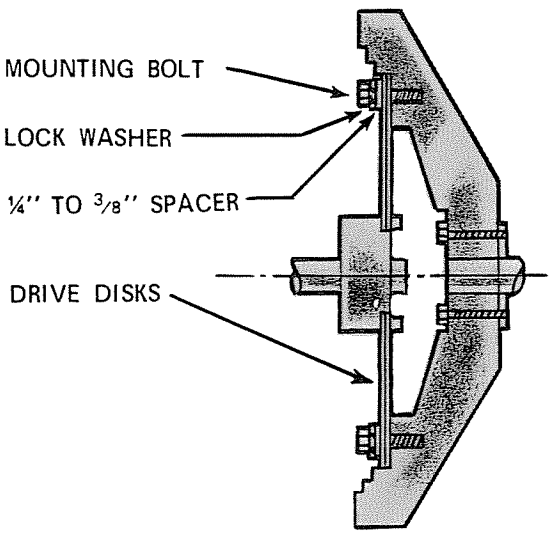

FIGURE 2-6 TYPICAL DRIVE DISK TO FLYWHEEL INSTALLATION.

2.7 V-BELT

2.7.1 Use only matched belt sets and avoid minimum pitch sheaves and belts. Follow the V-belt manufacturer's specifications or NEMA limits for sheave pitch.

2.7.2 Make certain the shaft axis of the prime mover and generator are paralled. Belts must enter and leave sheaves with no side bending. Tighten just enough to prevent slippage at full load. Never grease or use belt dressing on belts.

2.8 FLAT BELT

2.8.1 Selection of belts and pulleys of ample width will reduce amount of tension required to prevent slippage at full load. Lower belt tension reduces bearing loads and belt wear.

2.8.2 Position the pulleys so crowns are in the same plane. Make certain motors and generator shafts are paralleled. Observe belt manufacturer's or NEMA limits for pulley sizes.

2.9 GEAR BELTS (TIMING BELTS)

2.9.1 In general, installation of gearbelts will be the same as for flat belts. The precautions listed in (a.) through (e.) on page 9 should be taken when installing a gearbelt drive.

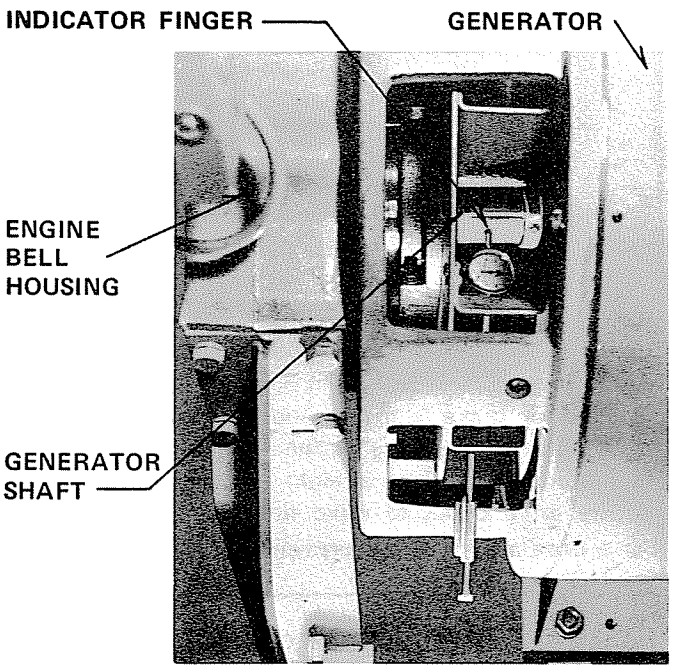

FIGURE 2-7 CHECKING GENERATOR SHAFT RUNOUT

Katolight Service - Master Repair Manual - Page 508

a. Gearbelts should be installed with snug fit, neither too tight or too loose. High initial tension is not necessary but when torque is unusually high a loose belt may "jump grooves". If the belt "jumps the grooves" the tension should be increased gradually until satisfactory operation is attained.

b. Be sure that shafts are parallel and pulleys are in alignment. On a long center drive, because of the tendency of the belt to run against one flange, it is sometimes advisable to offset the driven pulley to compensate.

c. On a long center drive, it is imperative that belt sag is not enough to permit teeth in the slack side to engage the teeth at the tight side.

d. It is important that both prime mover and generator are mounted rigidly to prevent variation in belt tension.

e. Although belt tension requires little attention after initial installation, provision should be made for some center distance adjustment for ease in installing and removing belt. Do not force belt over flange of pulley.

2.10 GEAR AND FLEXIBLE COUPLINGS GENERAL INFORMATION

2.10.1 When these drives are used instead of belt drives, the prime mover and generator shafts must be carefully aligned. The motor and generator must be firmly mounted to a rigid base to prevent misalignment of the unit shafts during operation. Excessive misalignment could cause vibration, noisy operation, excessive coupling or gear wear or premature bearing failure. Procedures for aligning gear and flexible couplings are contained on the following page.

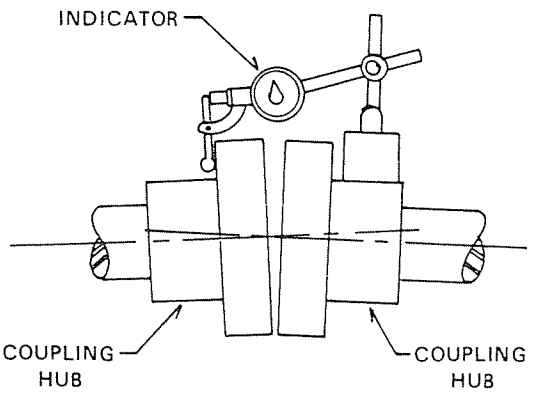

FIGURE 2-8 TESTING ANGULAR ALIGNMENT OF MOTOR AND GENERATOR SHAFTS

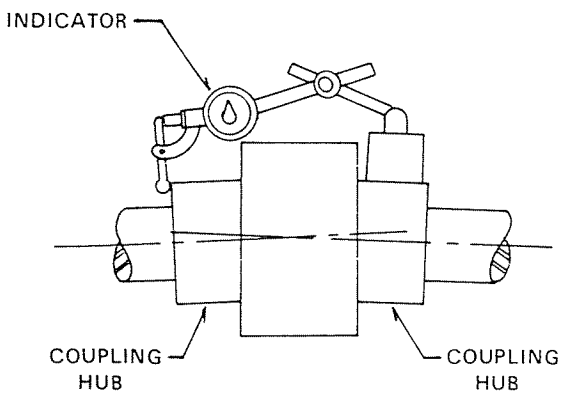

FIGURE 2-9 TESTING ANGULAR ALIGNMENT OF MOTOR AND GENERATOR SHAFTS FOLLOWING COUPLING INSTALLATION

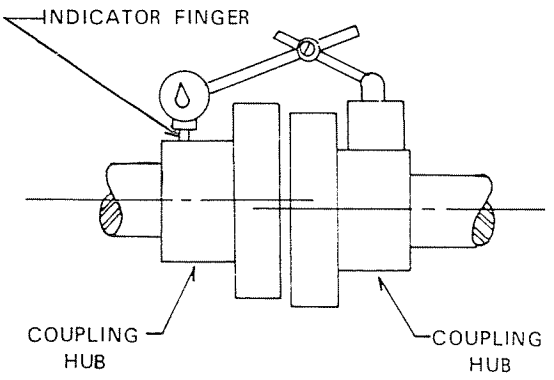

FIGURE 2-10 TESTING PARALLEL ALIGNMENT OF MOTOR AND GENERATOR SHAFTS

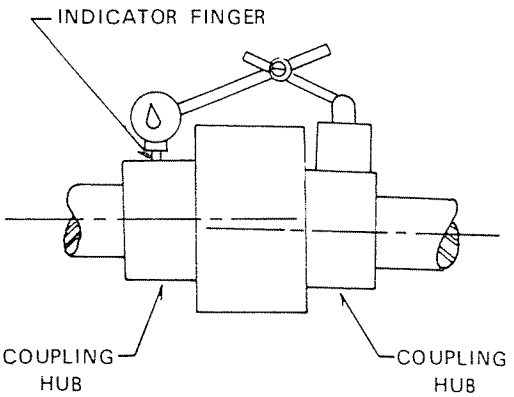

FIGURE 2-11 TESTING PARALLEL ALIGNMENT OF MOTOR AND GENERATOR SHAFTS FOLLOWING COUPLING INSTALLATION

2.11 GEAR DRIVE

2.11.1 Accurate alignment and rigid mounting are essential for satisfactory operation with gear drives. Pitch diameter and width should not be outside recommended NEMA limits. Avoid coupling which will impose excessive thrust on bearings.

2.11.2 In all cases, gear teeth must be centered with each other. Gear faces must be parallel and correct shaft center distance maintained. Gear teeth must fully engage to a depth giving approximately .002 inch maximum backlash. Avoid engagement of teeth so deep that they will bind or deflect.

2.11.3 Test for proper alignment by rotating shafts by hand. Check for backlash through at least one revolution of the shafts. Check backlash and gear face parallelism after tightening mounting bolts. Install or remove shims from under mounting feet to bring gear faces parallel.

2.12 INSTALLATION AND ALIGNMENT OF FLEXIBLE COUPLED DRIVES

2.12.1 The procedures outlined are for aligning flexible coupled drives. Follow the tolerances specified by the coupling manufacturer when less than described in this manual.

2.12.2 Install coupling hubs on generator and drive shafts in accordance with the installation procedures supplied by the manufacturer of the coupling. Then check for angular misalignment by scribing a reference mark on the coupling hub at the button or finger of the indicator to mark its position on the hub. Rotate both shafts simultaneously, keeping the finger or button of the indicator at the reference marks on the coupling hub. Note the reading on the indicator dial at each one-quarter revolution. Refer to figure 2-8 for test setup.

ANGULAR MISALIGNMENT OF THE SHAFTS MUST NOT EXCEED .001 INCH FOR EACH INCH OF RADIUS OF THE COUPLING HUB, TOTAL INDICATOR READING.

2.12.3 If angular misalignment is excessive, loosen motor and generator mounting bolts and place slotted shims under motor and generator mounting pads, as necessary, to correct alignment. Re-check alignment. Install or remove shims from under the mounting pads until aligned.

NOTE: If the motor generator set is moved to a new location, make test setup with coupling installed as shown in figure 2-9 and then rotate shafts and check alignment as described in paragraph 2.12.2.

2.12.4 Check for parallel shaft (run-out) alignment by scribing a reference mark on the ground or machine diameter of the coupling hub at the finger or button of the indicator. Rotate both shafts simultaneously, keeping the button or finger of the indicator at the reference mark on the hub. Note the reading on the indicator dial at each one-quarter revolution. Refer to figure 2-10 for test setup.

TOTAL RUN-OUT BETWEEN HUBS SHOULD NOT EXCEED .002 OF AN INCH.

2.12.5 When run-out between hubs is excessive, install or remove shims from under each of the motor or generator mounting pads; then re-check alignment, Add or remove shims until shafts are parallel. Tighten motor and generator mounting bolts following angular and run-out alignment. Check base mounting bolts for tightness. Re-check alignment before installing coupling.

NOTE: If the motor generator set is moved to a new location check for parallel alignment by making test setup as shown in figure 2-11 and then rotate shafts and check alignment as described in paragraph 2.12.4.

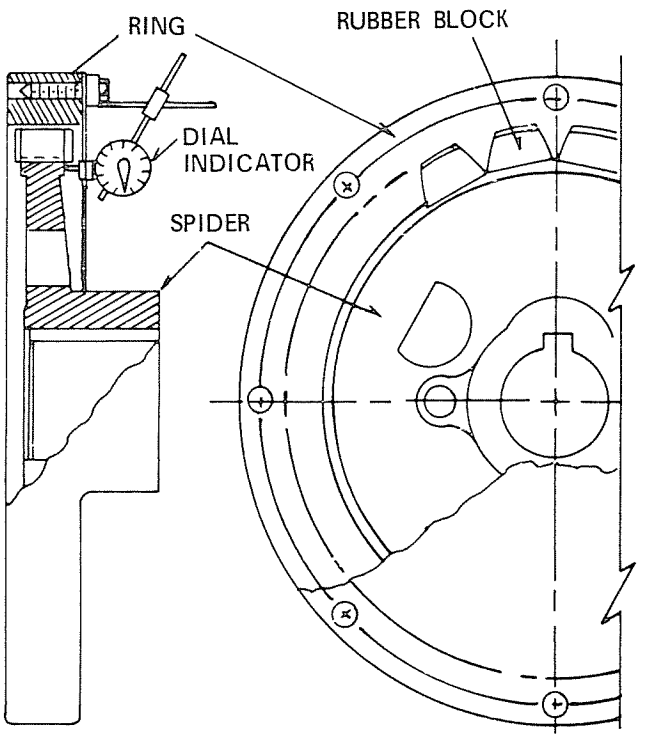

FIGURE 2-12 CHECKING ALIGNMENT OF TWIN DISC COUPLING.

Katolight Service - Master Repair Manual - Page 510

2.13 FLYWHEEL AND TWIN DISC CLUTCH COUPLING

2.13.1 A flywheel and twin disc clutch coupling provide a satisfactory coupling for motor generator sets operating with shaft speeds not in excess of 3760 RPM. The coupling should be parallel between the spider and the rings. Align within .03 inch total indicator reading between spider and ring by installing or removing shims, as necessary, from under motor or generator mounting pads. See figure 2-12.

2.14 INSTALLATION OF KATO VIBRATION DAMPENERS (KATO BASE MOUNTING FEET)

2.14.1 When motors or motor generator sets are installed in areas such as office buildings where noise or vibration would be a nuisance, these undesirable effects can usually be eliminated or greatly reduced by installing vibration dampeners.

2.14.2 KATO base mounting feet when properly installed provide a means of easily leveling generator sets as well as providing "vibration dampening". Install KATO base mounting feet as shown on figures 2-13 and 2-14.

Level unit by loosening Base Foot mounting bolts and then sliding base foot in elongated slots.

Anchor to foundation with anchor bolt. Use KATO "VIBRATION ISOLATORS" to provide vibration isolation.

DO NOT TIGHTEN ANCHOR BOLT NUTS TO TIGHTLY. COMPRESSION OF VIBRATION ISOLATOR AND NEOPRENE PAD WILL ELIMINATE THEIR EFFECTIVENESS.

2.15 VIBRATION

2.15.1 After alignment of motor generator set has been completed, run unit at no load and check for excessive vibration (see operation instructions, section 3). If vibration is excessive loosen one motor mounting bolt slightly and if vibration decreases, add shims until retightening of bolt reduces or eliminates vibration. Repeat in turn for all motor mounting bolts.

2.15.2 When vibration and alignment of motor are within limits, run motor generator set at low load and check again for vibration. If excessive, add shims under generator mounting pads in same manner as for the motor. Re-check alignment after any change in shims to control vibration.

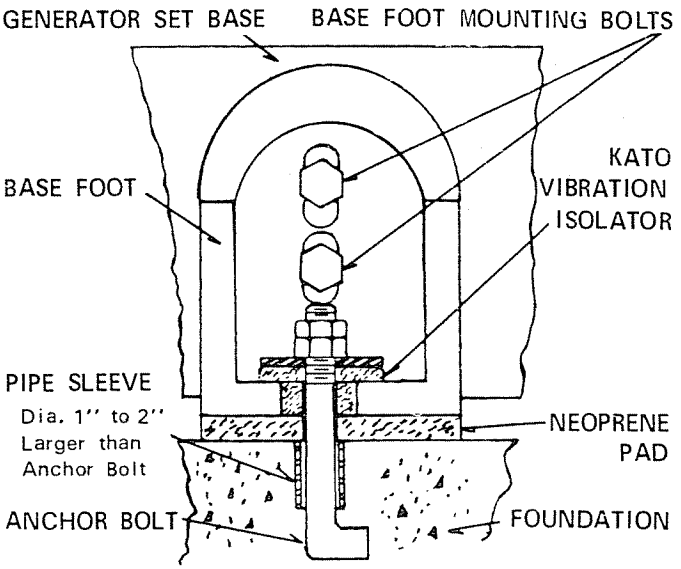

FIGURE 2-13 KATO BASE FOOT VIBRATION DAMPENERS.

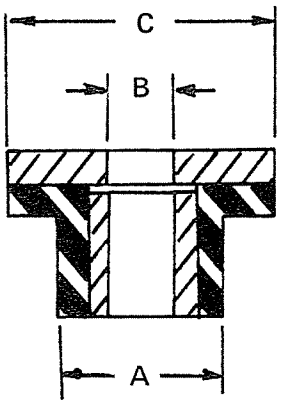

Part Number	A	B	C
158-00007-01 For 3/8" mtg. bolt Base Foot hole 1-1/32"	1-1/32"	.385	1-3/4"
158-00008-01 For 1/2" mtg. bolt Base Foot hole 1-7/32"	1-7/32"	33/64"	2"
158-00009-01 For 3/4" mtg. bolt Base Foot hole 1-1/2"	1-1/2"	49/64	3"

FIGURE 2-14 KATO VIBRATION ISOLATORS

2.16 DOWELING

2.16.1 Doweling generator sets will prevent movement of the units during operation should the mounting bolts loosen slightly. Install dowels as follows:

a. Check the alignment after the generator set has been in operation about 40 hours. Correct alignment if not satisfactory (refer to preceding paragraphs).

b. Through opposite generator pads drill holes through and into the base. Holes should have a diameter slightly smaller than the dowel pin.

c. Ream the holes to the proper diameter for the pins, clean out chips and then install pins.

d. Repeat procedure for doweling of motor.

NOTE: Dowel prime movers (engine or motor) manufactured by others than Kato Engineering Company in accordance with the instructions supplied by the manufacturer of the prime mover.

2.17 ELECTRICAL CONNECTIONS

2.17.1 Before connecting the generator to the electrical power load, check nameplate for the electrical characteristics and connect the generator exactly as shown in the connection diagrams. Refer to National Electrical Code and applicable local regulations for miminum specifications for wire size, conduit and protective devices.

2.18 PROTECTIVE DEVICES

2.18.1 Engine driven sets must be protected with adequate engine governors and protected against excessive overspeed. Refer to National Electrical Code and local electrical codes for minimum electrical requirements for the generator set.

2.18.2 The output to the load of the generator should always be protected with an overload protection device such as a circuit breaker or fuses. Size fuses and circuit breakers in accordance with National Electrical and Local Codes.

SECTION 3 OPERATION

3.1 PRE-OPERATION EQUIPMENT CHECK

3.1.1 After the generator and control equipment is completely installed and wired, but before operating the unit for the first time, perform a check of the equipment as follows:

a. If the generator windings have become wet, test winding insulation resistance and dry out windings before placing the unit in operation. Refer to the procedures for testing winding insulation resistance and the procedures for drying windings contained in Section 4 of this manual. Generators being placed in operation after being subjected to very low temperatures should be slowly warmed to prevent condensation.

b. See paragraph 4.14. If unit has bearings which require lubrication, grease bearings.

c. Check all interconnecting wiring against the connection diagrams supplied with the generator set.

d. Make certain brushes are seated and centered on the generator sliprings.

e. Inspect to see that satisfactory clearance exists between generator rotating and stationary parts. On two bearing generators rotate shaft by hand to make certain it turns freely.

f. Make certain no foreign objects are lodged in the generator. Remove all tools and shop cloth from the vicinity of the equipment.

3.2 INITIAL START

3.2.1 After installation is complete and the checks listed in paragraph 3.1 have been completed make an initial start and operational checkout of the equipment as listed in the following general instructions:

a. Open the OUTPUT CIRCUIT BREAKER to disconnect the generator from the load.

b. Adjust excitation controls to supply minimum excitation to the generator field. (Normally, adjustment of field rheostats should be to full resistance - full counterclock-wise position or if variable transformer is used transformer should be adjusted to minimum voltage position).

c. Start the generator set in accordance with the prime mover manufacturer's specifications.

d. Stop generator set. Check rotation as unit slows to stop. On motor driven generator sets, if rotation is not correct, reverse incoming power leads. On three phase motors, reverse any two incoming lines (except the neutral line).

e. Start and stop generator set several times. Observe any unusual conditions such as excessive noise or vibration. Allow sufficient time between starts for cooling.

f. When operation is satisfactory to this point, adjust voltage adjust rheostat (normally to approximately the midpoint position). Start generator and bring up to rated speed. Turn voltage adjust rheostat to point where desired output voltage is obtained.

g. Close output circuit breaker and apply a light load. Adjust voltage adjust rheostat until desired output voltage is obtained.

h. Slowly increase load to rated power factor full load. Adjust rheostat as necessary to obtain desired output voltage.

i. When an automatic voltage regulator is incorporated, check voltage regulation by applying the rated power factor load, and then checking the generator terminal voltage. Check voltage regulation. Refer to regulator manufacturer's operating instructions.

j. During operation, observe the generator at regular intervals so that any abnormal conditions can be corrected before serious damage occurs.

k. Check current on each line. Use a clip-on ammeter if an ammeter is not incorporated in generator set.

l. Check line-to-line and line-to-neutral voltages.

m. Shut down unit in accordance with the operating instructions supplied by the manufacturer of the prime mover.

3.3 SINGLE GENERATOR OPERATING INSTRUCTIONS

3.3.1 If the generator windings have become wet, test winding insulation resistance and dry out windings before operating the generator set. Refer to the procedures for testing winding insulation and the procedures for drying windings contained in Section 4 of this manual. Operate generator as described in paragraph 3.3.2.

Katolight Service - Master Repair Manual - Page 513

3.3.2 Start and operate the generator set in accordance with the following general instructions:

a. When voltage adjust rheostats have been previously adjusted to provide the desired output voltage, no adjustment should be required before placing the generator set in operation.

b. Start the generator set in accordance with the operating instructions supplied by the manufacturer of the prime mover. Bring up to rated speed.

c. Turn voltage adjust rheostat to point where desired generator output voltage is indicated on voltmeter. Apply load. Check output voltage, if not of desired value re-adjust the voltage adjust rheostat or, if used, variable transformer.

d. When an automatic voltage regulator is incorporated in the generator set, check voltage regulation.

e. During operation, observe the generator at regular intervals so that any abnormal conditions can be discovered and corrected.

f. When the generator set is operated as a standby unit open the OUTPUT CIRCUIT BREAKER before shutdown of the generator set.

g. Stop the generator in accordance with the instructions supplied by the manufacturer of the prime mover.

3.4 OPERATION OF STANDBY GENERATOR

3.4.1 Make certain OUTPUT CIRCUIT BREAKER of the primary power source is open before starting the STANDBY UNIT. Operate the generator set as described in paragraph 3.3. Following shutdown of the STANDBY UNIT, make certain OUTPUT CIRCUIT BREAKER is actuated to the OPEN position.

3.5 OPERATING INSTRUCTIONS FOR PARALLEL OPERATION OF GENERATORS

3.5.1 When operating two or more generators connected in parallel, open output circuit breaker and start each generator as described in steps (a) through (e) of paragraph 3.3.2. Make certain that the output voltage of each machine is properly adjusted to the system bus voltage.

CAUTION

DO NOT CLOSE THE LOAD CIRCUIT BREAKERS UNTIL THE GENERATORS HAVE BEEN CHECKED FOR PROPER PHASE ROTATION AND ADJUSTED FOR SYNCHRONIZATION AS DETAILED IN THE FOLLOWING PARAGRAPHS.

3.6 PHASE ROTATION

3.6.1 Before placing two or more three-phase generators in parallel, make certain the generators have the same phase rotation. This can be accomplished by connecting a three phase induction motor to each of the generators and checking the rotation of the motor. Care must be taken to make certain motor terminals are connected to the corresponding generator or bus terminals for each test. Phase rotation will be the same if the motor rotates in the same direction when connected to each generator.

3.6.2 If the motor rotates in the wrong direction when connected to one of the generators, reverse any two of the three generator leads (except neutral when used). Recheck motor rotation and continue checks until the induction motor rotates in the correct direction.

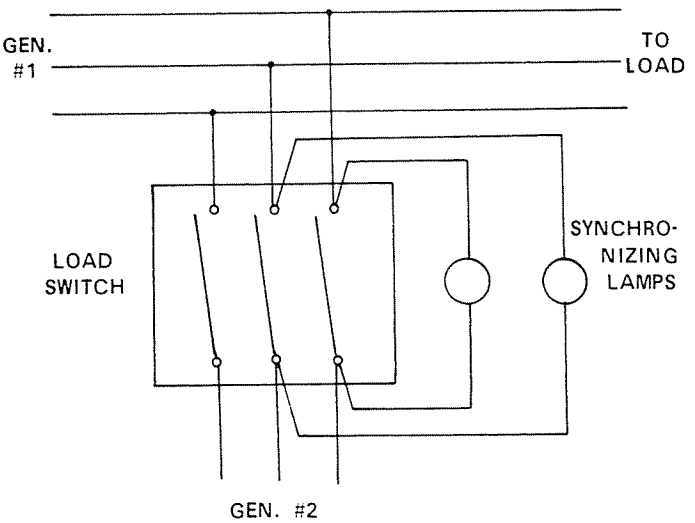

FIGURE 3-1. SYNCHRONIZING PARALLELED GENERATORS USING TEST LAMPS

WARNING

EXERCISE EXTREME CAUTION WHEN USING THIS METHOD OF SYNCHRONIZING GENERATORS TO AVOID EXPOSURE TO DANGEROUS VOLTAGES.

3.7 SYNCHRONIZING PARALLELED GENERATORS

3.7.1 Do not attempt to parallel generators until each machine to be paralleled has been checked for proper phase rotation and that each generator is adjusted for the required system voltage with the line switch open.

3.7.2 If a synchroscope is not available, generators can be synchronized by using incandescent lamps connected in the load circuit as shown in figure 3-1. Make certain that the total voltage rating of the series lamps equals the voltage rating of the generator.

3.7.3 Synchronize the generators by varying the speed of the incoming generator until fluctuation of the lamps is very slow. When the lamps are dark close the line switch. Care must be taken to close the line switch at the instant the lamps are dark .

3.8 DIVISION OF POWER LOAD AMONG PARALLELED GENERATORS

3.8.1 Adjust the engine governors in accordance with the engine manufacturer's instructions. Division of kilowatt or actual power load among generators operating in parallel is practically independent of generator excitation. Do not attempt to vary the amount of kilowatt load among paralleled generators by making adjustments to the voltage regulator.

3.9 DIVISION OF REACTIVE KVA AMONG PARALLELED GENERATORS

3.9.1 Division of reactive KVA among paralleled generators depends upon generator excitation. Methods of correcting the excitation of individual generators, should they take more or less than their share of the reactive KVA, are the addition of cross-current compensation or voltage-droop controls to the voltage regulator circuit.

3.9.2 The cross current or voltage droop rheostat should usually be set so that there is just enough resistance in the circuit to give stable operation of the generators under reactive KVA load conditions .

3.9.3 Place generator in operation, apply lagging power factor load, and check voltage droop. Maximum voltage droop from no load to full load is obtained with full voltage-droop resistance. A droop of 4% is frequently employed. Adjust each generator to be paralleled for identical droop characteristics.

3.9.4 Bring all generators up to correct speed and adjust all output voltages to identical values. Synchronize and parallel generators. Load the paralleled generators and check for satisfactory division of load currents. Correct by adjusting voltage-adjust rheostats and the droop-control resistors.

SECTION 4 MAINTENANCE

4.1 PREVENTIVE MAINTENANCE

4.1.1 Preventive maintenance is the practice of inspecting the generator set, cleaning the generator set, and eliminating minor disorders before they become serious. A routine regular preventive maintenance program practiced conscientiously will ensure peak performance, lengthen the life of the generator, and eliminate or at least greatly reduce breakdown time.

4.1.2 The quarterly preventive maintenance schedule described in TABLE 4-1 is enclosed as a guide for establishing a preventive maintenance program for generators operating under standard conditions. The specific operating conditions should be analyzed by the user of the equipment and a preventive maintenance program established accordingly. When preventive maintenance inspection determines cleaning is necessary, clean the generator and controls as described in paragraph 4.2.1.

4.2 CLEANING

4.2.1 When inspection determines cleaning is necessary, clean the generator and controls as follows:

a. Wipe loose dirt from exterior painted surfaces of generator and, when incorporated, the generator control panel assembly (controller) with a clean lint free cloth. Remove stubborn accumulations of dirt with an approved detergent or solvent. Clean all ventilating ports with a vacuum cleaner or filtered compressed air at a pressure of from 25 to 40 psi.

WARNING

OBSERVE PRECAUTIONS SPECIFIED BY THE MANUFACTURER OF THE SOLVENT BEING USED.

b. Clean inside of generator with a vacuum cleaner or use dry filtered compressed air at a pressure of from 25 to 40 psi. Remove stubborn accumulations of dirt and grease from windings with naptha.

WARNING

EXERCISE EXTREME CARE WHEN USING NAPTHA. USE ONLY IN WELL VENTILATED AREAS, AWAY FROM FLAME AND SPARKS .

c. Clean electrical contacts such as relay contacts, switch contacts, and terminals with an approved contact cleaner. **DO NOT FILE CONTACTS.**

d. Clean brushes and brushholders with lint free cloth. See paragraph 4.7, "Maintenance of Brushes, Brush Holders, and Sliprings".

TABLE 4-1

QUARTERLY PREVENTIVE MAINTENANCE SCHEDULE
1. If generator has bearings which require lubrication (grease fittings on generator), lubricate bearings at intervals and amounts shown on lubrication plate attached to generator.
2. Inspect lead wires and control device wiring for cracked insulation and loose terminals.
3. Inspect control equipment for loose mounting hardware.
4. Inspect control devices for accumulation of dust, moisture and other foreign matter.
5. Clean the outside of the generator assembly and ventilating screens. When dust or moisture is excessive, clean and/or dry the inside of the generator assembly.
6. Inspect brushes, brush holders, sliprings and commutator for satisfactory condition.
7. With unit running, check control devices and meters for correct adjustment and operation.
8. With unit running, observe any unusual noise or vibration. Refer to trouble shooting chart for possible causes of noise and vibration.

4.3 WINDINGS - PROTECTION

4.3.1 Generators operating intermittently in very damp locations should be protected with space heaters. Generators being placed in operation after being subjected to very low temperatures should be slowly warmed to prevent excessive condensation. Winding resistance should be checked before placing the generator in operation if the unit was subjected to an extremely damp environment.

4.4 INSULATION RESISTANCE TEST

4.4.1 A hand cranked megger of not over 500 volts is a convenient and safe method of testing insulation resistance. The formula contained on the following page is an accepted standard for measuring insulation resistance of stator windings.

Katolight Service - Master Repair Manual - Page 516

Winding insulation resistance measured at 500 VDC after one minute should not be less than:

$$\text{Resistance in megohms} = \frac{\text{Rated Voltage of Machine} + 1000}{1000}$$

The above formula is satisfactory for most checks. For more information see "Recommended Practice for Insulation Resistance Testing AC Rotating Machinery", AIEE Standard No. 43.

4.5 DRYING WINDINGS

4.5.1 If the insulation fails to meet the test standards, the generator may be dried out by heat from a warm air oven, heat lamps, or strip heaters. The temperature should not exceed 75°C. (167°F.) Another method which can usually be used to dry windings is by application of internal heat as described in paragraph 4.5.2.

WARNING

WHEN OVEN DRYING, USE A FORCED AIR CIRCULATION OVEN, NOT A RADIANT TYPE. RADIANT TYPE OVEN WOULD OVERHEAT SOME GENERATOR PARTS BEFORE REMOTE PARTS REACHED A SATISFACTORY TEMPERATURE.

4.5.2 Drying the generator winding insulation by the application of internal heat consists of operating the generator as described in the following procedure.

a. Check for excessive accumulation (pockets) of water on windings. Dry as much as possible with compressed air before applying internal heat.

b. In one of the stator leads, insert an ammeter of sufficient range to read full-load generator current.

c. Connect all stator lead terminals together to short circuit the stator windings.

d. If a voltage regulator is incorporated, disconnect the regulator incoming and output leads and connect a variable source of DC power to the exciter field leads.

CAUTION

USE A VARIABLE RESISTOR OR RHEOSTAT IN THE INPUT CIRCUIT TO THE EXCITER FIELD TO LIMIT GENERATOR CURRENT TO EQUAL TO OR LESS THAN RATED VALUE.

e. Operate the generator at normal speed. Supply just enough excitation to cause rated current to flow in the generator stator windings.

f. Operate for sufficient time to ensure thorough drying of the windings. This can be determined by stopping the generator periodically and checking the insulation resistance of the windings. Insulation resistance checks at one-hour intervals are suggested. Terminate the drying-out process when measured resistance is within test standards (paragraph 4.4) and shows little change over a two to four hour period of operation.

4.6 STATOR WINDING SHORT CIRCUIT TEST

4.6.1 Use an inside-type growler and test each coil in the stator. Position the growler in the stator and hold a thin metal strip, similar to a hacksaw blade, parallel to the core slots. Energize the growler and explore the core surfaces approximately 1 pole distance on each side of the growler. Continue testing 1 core slot at a time until all coils are tested. If the winding is shorted, the metal strip will vibrate when held over the slot containing the faulty coil.

4.7 MAINTENANCE OF BRUSHES, BRUSH HOLDERS, SLIPRINGS AND COMMUTATORS

4.7.1 Brushes, brush holders, sliprings and commutators should be inspected and cleaned periodically.

4.7.2 Dirty brush holders, commutators, sliprings and brushes or brushes which are not properly "seated", or pitted sliprings will cause excessive brush sparking and poor commutation. Brushes can be raised in their holders for inspection or sanding of the sliprings or commutator as shown in figure 4-1.

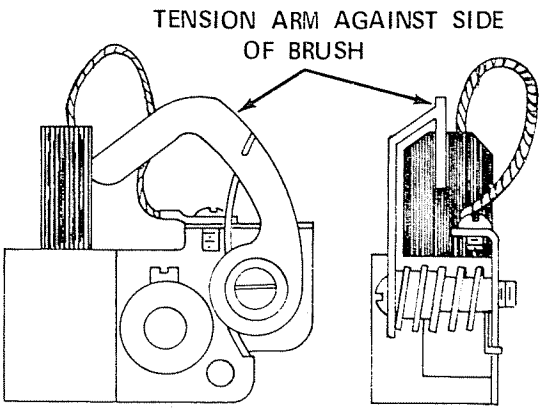

FIGURE 4-1 BRUSH RAISED IN BRUSH HOLDER.

4.8 REPLACING BRUSHES AND ADJUSTING BRUSH SPRING TENSION

4.8.1 Replace brushes when worn excessively. Make certain brush is replaced before tension arm rests on brush holder. When replacing brushes, it is most important that they are properly "seated" to the contour of the sliprings and free to move in the brush holders.

NOTE: **Always order replacement brushes of the same size and of an equivalent grade or type as were installed at the factory. Order by part number including the type and serial number of the generator.**

4.8.2 Nominal spring tension should be approximately 3 lbs./sq. in. of brush surface. Spring pressure within a range of from 2½ to 4 lbs./sq. in. of brush surface is normally acceptable.

4.9 SEATING BRUSHES

4.9.1 To properly seat brushes, lift all the brushes in their holders. Insert a strip of (No. 00) sandpaper between the brush and the slipring or commutator with the abrasive side toward the brush. Lower one of the brushes in the holder. With the brush in the holder and under pressure draw the sandpaper in the direction of rotation of the generator, keeping the sandpaper close to the contour of the sliprings or commutator. Lift the brush to release pressure before returning the sandpaper for the next stroke. Sand until at least 80% of the brush surface is in contact with the slipring or commutator. Sand each of the remaining brushes one at a time as described above.

4.9.2 Check for proper "seating" by running the machine at no load minimum excitation, and observe the area of bare sliprings or commutator polished by the brushes. Reseating of brushes is required when brushes are replaced, or the sliprings or commutator are resurfaced, or when excessive brush sparking is evident. Seat brushes on sliprings or commutator as described above.

WARNING
NEVER USE EMERY CLOTH TO SEAT BRUSHES

4.10 TURNING SLIPRINGS

4.10.1 When sliprings become too deeply pitted or grooved to be cleaned with sandpaper, the sliprings should be turned. Do not remove more material than is necessary to remove grooves or pitted areas from the slipring surface.

4.11 SANDING COMMUTATOR

4.11.1 Lift all brushes in their holders, install a strip of sandpaper with the abrasive side against the commutator. Using a hardwood block which has the same contour as the commutator surface, press the sandpaper surface against the commutator surface. Run the commutator at high speed while moving the block back and forth along the commutator surface parallel to the shaft.

4.12 TURNING COMMUTATORS

4.12.1 When the commutator is too deeply grooved or pitted to be cleaned with sandpaper, the armature must be mounted in a lathe and the commutator turned down. Make certain it is centered in the lathe.

4.12.2 Turn the commutator, removing only as much material as is necessary to remove grooves or pitted areas from the commutator surface. After turning, undercut the mica segments.

NOTE
IF COMMUTATOR IS NOT CONCENTRIC WITH THE TRUE SHAFT CENTER THE BRUSHES WILL BE FORCED TO MOVE IN THEIR HOLDERS TO CONFORM TO THE ECCENTRICITY OF THE COMMUTATOR WHICH WILL RESULT IN EXCESSIVE BRUSH WEAR AND SPARKING.

4.13 UNDERCUTTING COMMUTATOR

4.13.1 The commutator may be undercut by using either a square or "V" undercutting tool.

4.13.2 When a square undercutting tool is used, it should be slightly wider than the mica and well centered so that the mica fin as shown at (C), figure 4-2, page 19, is not left. Remove edges as shown at (A) by beveling as shown at (B).

4.13.3 When a "V" undercutting tool is used, the tool should be slightly wider than the mica to provide the bevel as shown at (E), figure 4-2, page 19. The mica fin shown at (D) will result if the undercutting is not deep enough. If the tool is not well centered a fin as shown at (F) will be the result. Always make certain the undercutting tool is centered and cuts deep enough to prevent these undesirable results.

Katolight Service - Master Repair Manual - Page 518

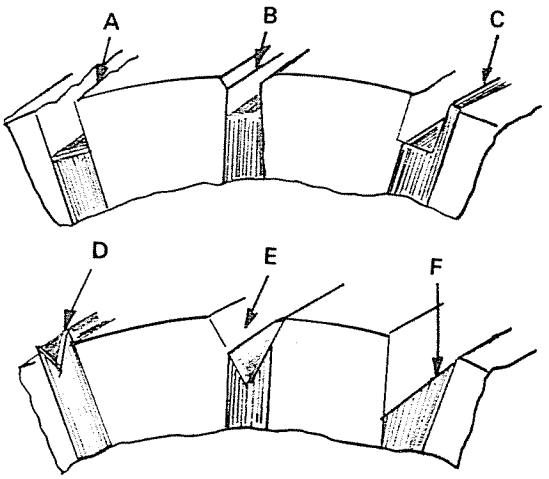

FIGURE 4-2 UNDERCUT COMMUTATOR

4.14 BEARINGS

4.14.1 The bearings are of the factory lubricated sealed or shielded cartridge ball bearing type on most KATO generators with rating under 75 KW. Sealed or shielded ball bearings do not require periodic replenishment of lubricating grease.

4.14.2 **Most Kato generators with ratings over 75 KW have ball bearings which should be periodically lubricated.**

Grease fittings are incorporated on Kato generators that have ball bearings which require periodic lubrication. A relief valve is generally installed in the drain ports on these machines.

Replenish grease at intervals and amounts listed on lubrication data plate attached to the generator.

DO NOT OVERFILL! INSPECT AND REMOVE GREASE FROM SLIP RINGS, BRUSHES AND OTHER INTERNAL PARTS OF THE GENERATOR.

4.15 BEARING REMOVAL

4.15.1 Remove the endbell to expose bearing. Use a puller to remove the bearing from the shaft. Protect the shaft end with a cap. Make certain puller applies pressure only against the bearing inner ring. If puller will not hook bearing inner ring, fabricate a split bushing and install it between the bearing and the puller hooks.

4.16 BEARING INSTALLATION

4.16.1 Heat the bearing to 250°F. in a clean temperature controlled circulating air oven Start the heated bearing onto the shaft. Then use a fiber or soft metal sleeve to tap bearing into place. Make certain that pressure is applied only to the bearing inner ring. Final position of bearing should be with inner ring resting against bearing shoulder on shaft. Assemble the generator after the bearing has cooled.

4.17 TROUBLESHOOTING

4.17.1 Troubleshooting is process of recognizing malfunctions of the system, intelligently analyzing the system malfunction, and making the necessary corrections to place the unit back into proper operation.

4.17.2 The systems operator is urged to be alert at all times for any signs of malfunctions. Any minor malfunctions should be corrected immediately to prevent serious malfunctions and down time. The troubleshooting chart lists symptoms of malfunctions which could possibly occur as well as the possible cause and remedy.

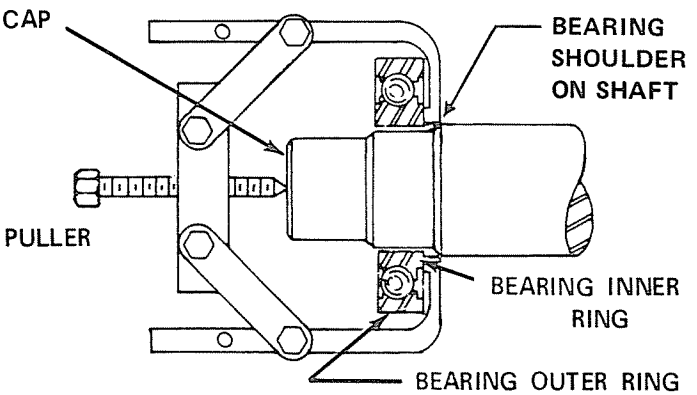

FIGURE 4-3 REMOVING BEARING FROM GENERATOR SHAFT.

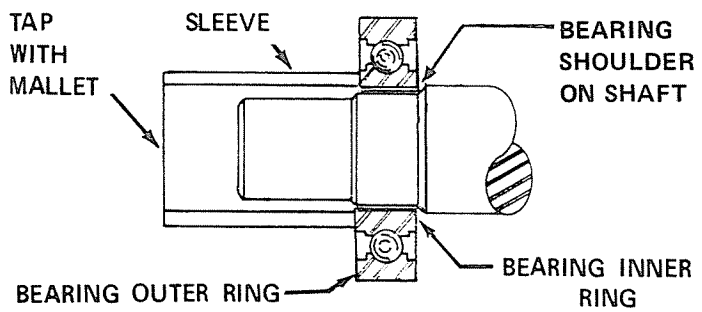

FIGURE 4-4 INSTALLING BEARING ON GENERATOR SHAFT.

Katolight Service - Master Repair Manual - Page 519

TABLE 4-2
TROUBLESHOOTING CHART

SYMPTOM	POSSIBLE CAUSES	REMEDY
No Voltage	Poor brush connection (either sliprings commutator, or brushes).	Clean and adjust or replace brushes. Clean, sand, or turn sliprings. Check that brush holders and brush wires are connected properly.
	Excitation (DC) lead open shorted or grounded to frame.	Check with continuity lamp or ohmmeter. Replace defective leads.
	Loss of residual magnetism.	Flash field.
	Short circuit in line or load.	Check for short in load by removing motors or appliances from the line. If short persists, the trouble is on the line. If line is clear, add motors or appliances one at a time until trouble is found.
	Field coils shorted or open.	Check for open circuit and for short circuit. Replace rotor if defective.
	Shorted or grounded sliprings.	Disconnect lead wires and check slipring insulation with a megger. Repair or replace slipring assembly if defective.
	Shorted commutator or shorted or open exciter armature windings	Repair commutator or replace exciter armature assembly.
Low Voltage	Excessive Load	Reduce load to rated value. See generator nameplate for rating
	Improper adjustment of voltage adjust rheostat	Adjust rheostat.
	Underspeed.	Correct speed of engine or motor driving generator.
	Insufficient excitation due to improper adjustment of voltage adjust rheostat	Increase field excitation by adjusting voltage. adjust rheostat
	Line loss	Increase size of line wire.
	High resistance connections (connections will be warm or hot).	Check connections. Replace or tighten defective connections
	Brushes dirty or not properly seated.	Clean or replace brushes.
	Sliprings or commutator dirty or in need of repair.	Clean or repair as necessary.
	Low power factor (AC only).	Reduce inductive (motor) load. Some AC motors draw approximately the same current regardless of load.

SYMPTOM	POSSIBLE CAUSES	REMEDY
Low Voltage (continued)	Weak field due to operating in warm temperature.	Improve the ventilation if generator is housed indoors. Field current can be increased providing the generator temperature does not exceed temperature rating stamped on the nameplate.
	Malfunction of voltage regulator when used	Repair or replace voltage regulator.
Fluctuating Voltage	Irregular speed of prime mover.	Check and adjust governing device.
	Poor brush contact.	Clean and adjust or replace brushes. Check brush tension spring pressure, 3 lbs. per square inch of brush surface nominal (2½ to 4 lbs/sq. inch generally satisfactory).
	Loose terminal or load connections.	Check connection. Tighten or replace defective connectors.
	Generator overloaded.	Reduce load to rated value. See generator nameplate for rating.
	Sliprings or commutator out of round or pitted	Turn sliprings or commutator on a lathe concentric with center of generator shaft
	DC excitation voltage fluctuating	Trace DC excitation through brushes, commutator, sliprings, and field coils and make repairs as necessary. Repair or replace defective parts.
	Shorted exciter field coil	Test for short circuit. Replace defective coil.
High Voltage	Improperly adjusted voltage adjust rheostat	Adjust rheostat.
	Overspeed	Correct speed of prime mover.
	Operating in sub-zero temperatures.	Increase field resistance.
	Defective voltage regulator	Repair or replace voltage regulator.
Brush Sparking	Sliprings and/or commutator surface not concentric to shaft, surface pitted or rough, slipring insulation defective. or high mica bars on commutator	Repair sliprings and/or commutator according to maintenance instructions.
	Loose brush holder.	Re-align and tighten.
	Lack of brush pressure	Adjust or replace brush tension spring. 3 lbs./sq. in. per inch of brush surface nominal (2½ to 4 lbs./sq. inch).
	Improper grade of brushes.	Replace with correct grade of brushes.
	Brushes not in commutating plane	Set to electrically neutral position.

SYMPTOM	POSSIBLE CAUSES	REMEDY
Brush Sparking (continued)	Dirty sliprings.	Sand lightly with 00 sandpaper.
	Open or shorted exciter armature	Check with growler. Repair or replace armature if defective.
	Generator overloaded.	Check ammeter readings and compare with nameplate rating.
Overheating	Generator overloaded.	Reduce load. Check ammeter readings and compare with nameplate rating.
	Clogged ventilating passages.	Clean air passages.
	High room temperature.	Improve ventilation.
	Insufficient circulation.	Provide cross-ventilation
	Operating with excessive voltage.	Check voltage drop in distribution lines and connections.
	Low power factor (AC only).	Reduce inductive load (motor), or install power factor improvement capacitors.
	Unbalanced load on 4 wire, 3 phase generators.	The load on each leg should be as evenly balanced as possible and should not exceed the rated current on any leg.
	Motors operating off generator not designed for generator frequency and voltage.	Motors operating from generator must be of the same frequency and voltage as stamped on the generator nameplate.
	Excessive brush pressure.	Reduce spring pressure. 3 lbs./sq. inch of brush surface nominal (2½ to 4 lbs./sq. inch).
	Bent shaft.	Straighten or replace.
	Defective bearing.	Replace bearing.
Vibration	Improper mounting, or misalignment of coupling or drive pulley.	Align motor and generator. Refer to Section 2.
	Incorrect mounting of generator to engine.	Re-install correctly. Refer to installation instructions contained in Section 2.
	Transfer of vibration to generator set from another source.	Isolate generator set by installing vibration dampeners. Refer to Installation Instructions. Section 2.
	Defective bearing.	Replace bearing. Refer to Section 4 paragraphs 4.15 & 4.16.
	Rotor out of balance following repair or replacement of generator rotor.	Balance rotor assembly with cooling fan installed.
	Defective rotor windings due to excessive overspeed.	Replace or repair rotor. Correct cause of overspeed (defective engine governor and/or engine overspeed shutdown devices).
	Loose or broken fan	Tighten or replace if broken.
	Bent shaft due to excessive load.	Straighten shaft or replace rotor.

4.18 DISASSEMBLY OF SINGLE BEARING GENERATOR

4.18.1 The following general instructions describe disassembly procedures for typical KATO single bearing generators and direct connected brush type DC exciters. Assemble the generator by reversing the order of the steps taken to disassemble the unit.

4.18.2 Disassemble generators of the type described above as shown in figure 4-5 as follows:

a. Remove outlet box cover and disconnect generator load lines, exciter field leads, and generator field leads.

b. Remove the generator from the engine by reversing assembly procedures. See Section 2, Installation.

c. Remove exciter cover (1). Make sure brushes (11) and (22) are raised in holders before generator is removed from the engine.

d. Remove generator base mounting bolts.

e. Using slings attached to the generator lifting eyes remove generator from base.

f. Disconnect exciter shunt field coil leads and generator field leads. Remove any clips securing field leads to exciter or generator frame.

g. Remove exciter armature retaining bolt and washer (2).

h. Remove exciter armature (3) and if used, aligning key (39).

i. Remove commutator endbell bolts (17). Tap to loosen endbell (16).

j. Check for shims in bearing well. Make certain shims, when incorporated, are reinstalled when generator is assembled.

k. Remove rotor from drive end of generator.

l. Remove bearings as described in paragraph 4.15.

m. Unless damaged, do not remove brush ring assembly (14).

4.19 DISASSEMBLY OF TWO BEARING GENERATOR

4.19.1 The following general instructions describe disassembly procedures for typical KATO two bearing revolving field generators with direct connected brush type DC exciters. Assemble the generator by reversing the order of the steps taken to disassemble the unit.

4.19.2 Disassemble generator of the type described above and as shown in figure 4-6 as follows:

a. Remove outlet box cover and disconnect generator load lines, exciter field leads and generator field leads.

b. Remove the generator from the prime mover by reversing assembly procedures. See Section 2, Installation. Remove coupling or drive sheaves in accordance with the instructions supplied by the manufacturer of the coupling.

c. Remove exciter cover (1). Make sure brushes (11) and (22) are raised in holders before generator is disassembled.

d. Remove generator base mounting bolts.

e. Using slings attached to the generator lifting eyes remove generator from base.

f. Disconnect exciter shunt field coil leads and generator field leads. Remove any clips securing field leads to exciter or generator frame.

g. Remove exciter armature retaining bolt and washer (2).

h. Remove exciter armature (3),and when used, aligning key (38).

i. Remove commutator endbell bolts (17). REmove endbell (16).

j. Remove drive endbell bolts (36). Remove endbell (32).

k. Check for shims in bearing wells. Make certain shims, when incorporated, are reinstalled when generator is assembled.

l. Remove rotor from drive end of generator.

m. Remove bearings (15) and (35) as described in paragraph 4.15.

n. Unless damaged, do not remove brush ring assembly (14).

4.20 ORDERING RENEWAL PARTS

4.20.1 If a part should require replacement, order by part name and part number. Give the model, type and serial number of the generator. Replacement parts should always be of the same size and rating as the original equipment. Do not attempt to substitute similar parts. For fastest service direct parts order to:

Kato Engineering Company Parts Department,
1415 First Avenue North,
Mankato, Minnesota 56001.

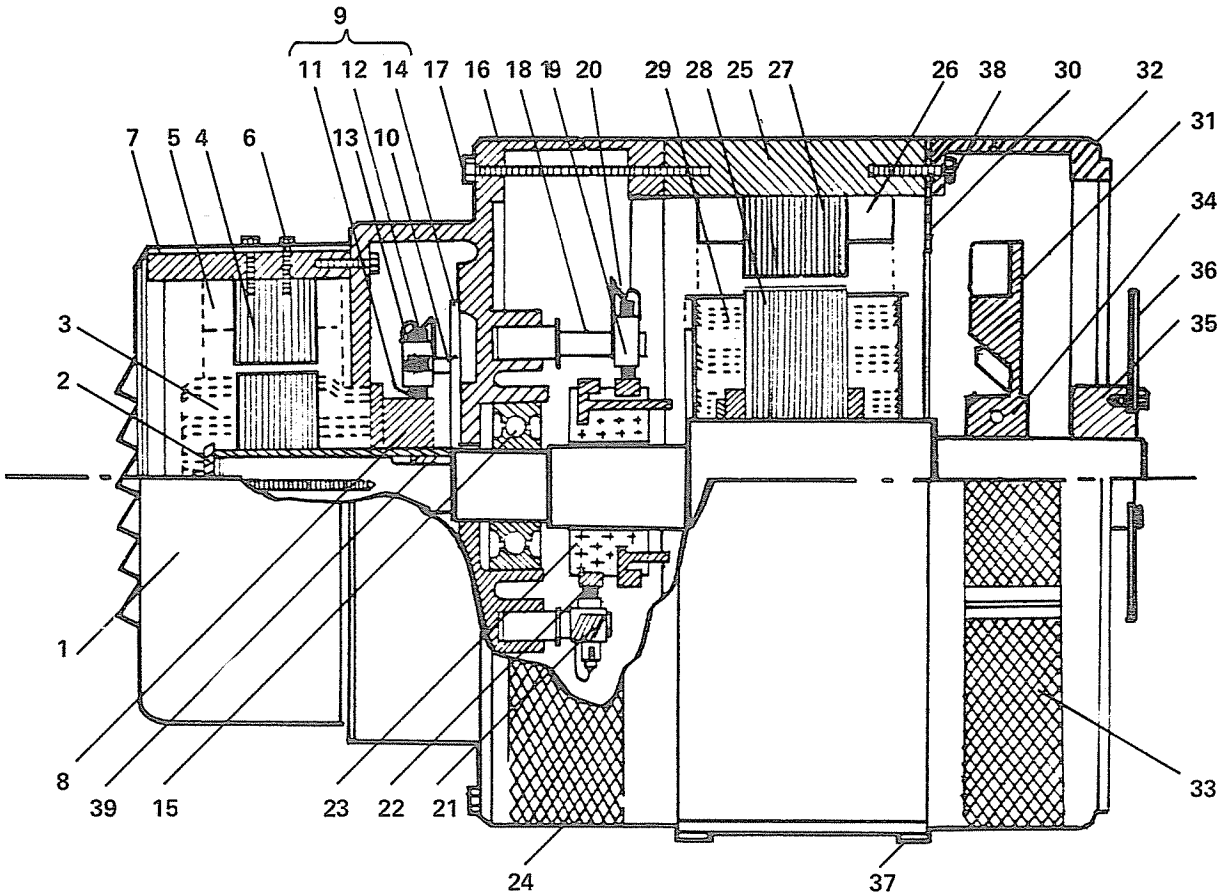

FIGURE 4-5 CROSS SECTIONAL VIEW - TYPICAL SINGLE BEARING REVOLVING FIELD AC GENERATOR WITH DIRECT CONNECTED BRUSH TYPE DC EXCITER.

NUMBER	PART DESCRIPTION	NUMBER	PART DESCRIPTION
1	Exciter Cover	20	Brush Tension Arm
2	Exciter Armature Retaining Bolt and Washer	21	Brush Tension Spring
		22	Brush
3	Exciter Armature	23	Collector Ring Assembly
4	Exciter Field Pole	24	Air Intake Screen
5	Exciter Field Coil	25	Generator Frame
6	Exciter Field Pole Mounting Bolt	26	Generator Stator Coil
7	Exciter Frame	27	Generator Stator Core
8	Commutator	28	Generator Field
9	Brush Holder Assembly	29	Generator Field Coils
10	Brush Holder Stud	30	Baffle
11	Brush	31	Fan
12	Brush Tension Arm	32	Adapter Endbell, Drive End
13	Brush Tension Spring	33	Fan Screen
14	Brush Holder Ring Assembly	34	Fan Hub
15	Bearing, Commutator End	35	Drive Hub
16	Endbell, Commutator End	36	Drive Plates
17	Endbell Bolt, Commutator End	37	Generator Base and Mounting Pads
18	Brush Holder Stud	38	Bolt, Drive Endbell
19	Brush Holder	39	Exciter Armature Aligning Key

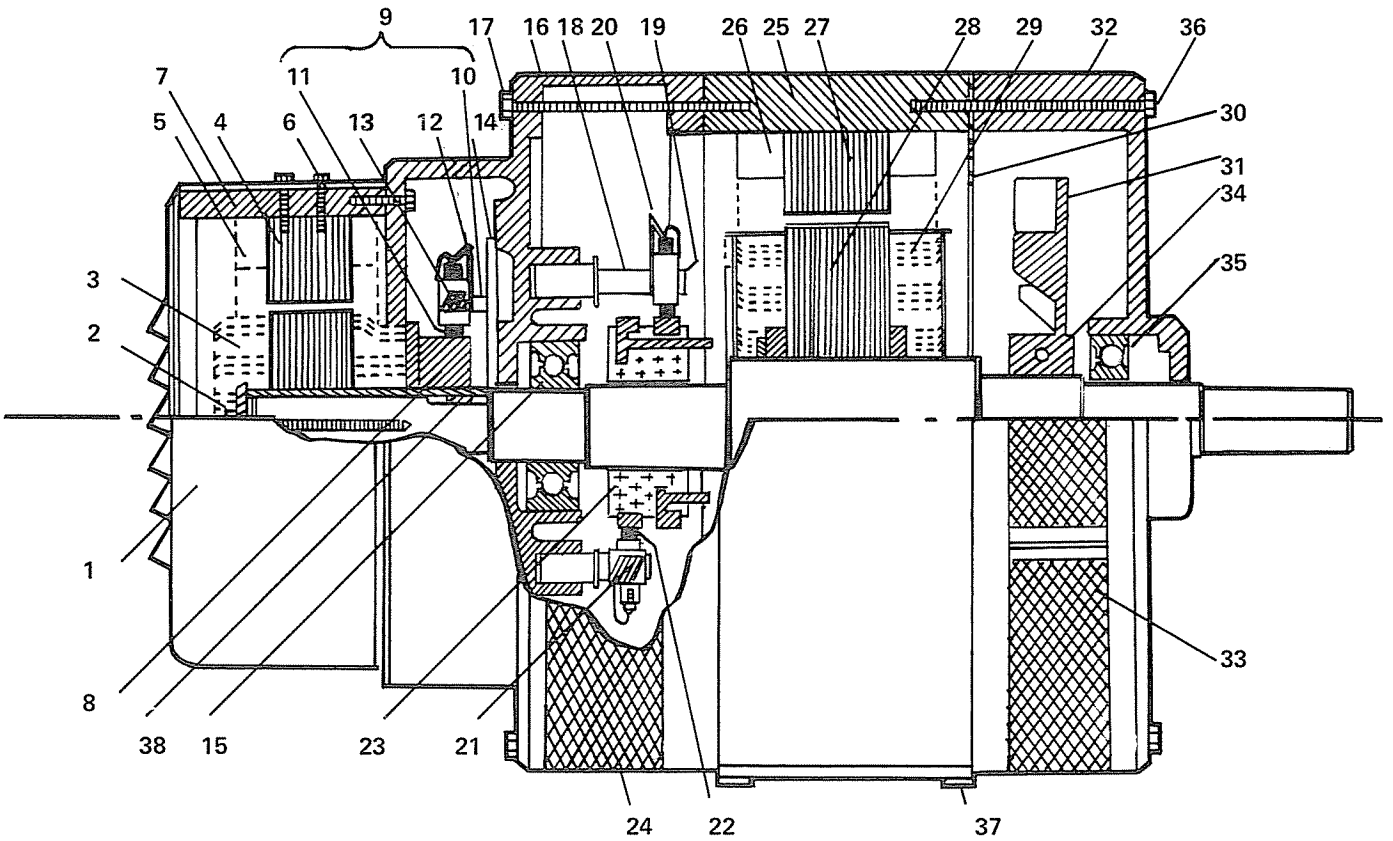

FIGURE 4-6 CROSS SECTIONAL VIEW - TYPICAL KATO REVOLVING FIELD TWO-BEARING GENERATOR WITH DIRECT CONNECTED BRUSH TYPE DC EXCITER.

NUMBER	PART DESCRIPTION	NUMBER	PART DESCRIPTION
1	Exciter Cover	20	Brush Tension Arm
2	Exciter Armature Retaining Bolt and Washer	21	Brush Tension Spring
		22	Brush
3	Exciter Armature	23	Collector Ring Assembly
4	Exciter Field Pole	24	Air Intake Screen
5	Exciter Field Coil	25	Generator Frame
6	Exciter Field Pole Mounting Bolt	26	Generator Stator Coil
7	Exciter Frame	27	Generator Stator Core
8	Commutator	28	Generator Field
9	Brush Holder Assembly	29	Generator Field Coils
10	Brush Holder Stud	30	Baffle
11	Brush	31	Fan
12	Brush Tension Arm	32	Drive Endbell
13	Brush Tension Spring	33	Fan Screen
14	Brush Holder Ring Assembly	34	Fan Hub
15	Bearing, Commutator End	35	Bearing, Drive End
16	Endbell, Commutator End	36	Bolt, Drive Endbell
17	Endbell Bolt, Commutator End	37	Generator Base and Mounting Pads
18	Brush Holder Stud	38	Exciter Armature Aligning Key
19	Brush Holder		

WARRANTY

Kato Engineering Company warrants that the apparatus manufactured by us will deliver its rated output, providing such apparatus is properly installed, properly cared for, and properly operated under normal envi ronmental conditions.

Standard products manufactured by Kato Engineering Company are warranted to be free from defects in workmanship and material for a period of one year from date of shipment, and any products which are defective in workmanship or material will be repaired or replaced at the option of Kato Engineering Company. Final determination as to whether a product is actually defective rests with Kato Engineering Company. The obligation of Kato Engineering Company hereunder shall be limited solely to repair and replacement at its factory, of products that fall within the foregoing limitations, and shall be conditioned upon receipt by Kato Engineering Company of written notice within the warranty period of any alleged defects or deficiency. No products shall be returned to Kato Engineering Company without its prior consent. In no case can Kato Engineering Company accept shipping charges incurred either through return of defective items to its factory or return of repaired or replacement item to the user. Kato Engineering Company cannot assume responsibility or accept invoices for unauthorized repairs to its components, even though defective. In the case of components, parts, or units purchased by Kato Engineering Company, the obligation of Kato Engineering Company shall not exceed the settlement that it is able to obtain from the supplier thereof.

The life of the products of Kato Engineering Company depends to a large extent upon type of usage therof, and Kato Engineering Company makes no warranty as to period of service nor as to fitness of its product for specific applications by the Buyer unless Kato Engineering Company specifically agrees to otherwise in writing after the proposed usage has been made known to it. In no event will Kato Engineering Company be liable for consequential or incidental damages or for any expense incurred by Buyer due to use or sale of products sold by Kato Engineering Company.

The foregoing warranty is exclusive and in lieu of all other warranties expressed or implied, including but not limited to any warranty of merchantability or of fitness for a particular purpose.

This Warranty does not apply to experimental or developmental products.

1415 1st Avenue P.O. Box 47 / Mankato, Minnesota 56001 / (507) 625-4011 TLX: 29-0786 / **INS-51C-65**

KATO ENGINEERING
RELIANCE ELECTRIC

Printed in U.S.A.

4812M

PUBLICATION NUMBER: 350-01001-00
PUBLICATION DATE: APRIL, 1991

INSTRUCTION MANUAL

BRUSHLESS REVOLVING FIELD

ALTERNATING CURRENT GENERATORS

_____
Serial Number

Includes
General Description
Check-out and Operation
Maintenance and Troubleshooting
Assembly/Disassembly

Kato Engineering

P.O. Box 47
Mankato, MN 56002
(507) 625-4011

RELIANCE ELECTRIC

Printed in U.S.A.

TABLE OF CONTENTS

SECTION 1 INTRODUCTION AND DESCRIPTION PAGE

1.1 Introduction....1.
1.2 General Description....1.
1.3 Construction....1.

SECTION 2 INSTALLATION

2.1 Receiving Inspection....5.
2.2 Unpacking and Storage....5.
2.3 Location....5.
2.4 Assembly to Prime Mover....6.
2.5 Belt Drives - General Information....14.
2.6 V-Belt....14.
2.7 Flat Belt....14.
2.8 Gear Belts (Timing Belts)....14.
2.9 Gear and Flexible Couplings - General Information....14.
2.10 Gear Drive....14.
2.11 Installation and Alignment of Flexible Coupled Drives....14.
2.12 Flywheel and Twin Disc Clutch or Other Flexible Coupling....15.
2.13 Vibration....15.
2.14 Doweling....15.
2.15 Electrical Measurements and Connections....16.
2.16 Protective Devices....17.

SECTION 3 OPERATION

3.1 Idling....18.
3.2 Initial Start-up with both Auto Manual and Automatic Voltage Control....18.
3.3 Initial Start-up Procedures for generators with Automatic Voltage Control....18.
3.4 Field Flashing....19.
3.5 Parallel Operation....19.
3.6 Continuous Operation....20.

SECTION 4 MAINTENANCE

4.1 Preventive Maintenance....21.
4.2 Cleaning....21.
4.3 Windings - Protection....21.
4.4 Insulation Resistance Test....21.
4.5 Bearing Lubrication....22.
4.6 Testing Brushless Exciter Rotating Rectifiers with an Ohmmeter....22.
4.7 Testing Brushless Exciter Rotating Rectifiers with a Test Lamp....22.
4.8 Testing Surge Protector with Test Lamp....23.
4.9 Restoring Residual Magnetism....24.

SECTION 5 TROUBLESHOOTING....25.

TABLE OF CONTENTS (CONTINUED)

SECTION 6 ASSEMBLY AND DISASSEMBLY PAGE

6.1 Bearing Removal ..... 29.
6.2 Bearing Installation ..... 29.
6.3 Exciter Armature and Rotating Rectifier Assembly Removal ..... 29.
6.4 Exciter Armature and Rotating Rectifier Assembly Installation ..... 29.
6.5 Removing and Replacing Exciter Stator Assembly ..... 30.
6.6 Assembly and Disassembly of Single Bearing Engine Drive Generators ..... 31.
6.7 Assembly and Disassembly of Two Bearing Generators ..... 31.
6.8 Assembly and Disassembly of Synchronous Brushless Dual Generators Fan Mounted at Drive End ..... 34.
6.9 Assembly and Disassembly of Synchronous Brushless Dual Generators with Center Mounted Fan ..... 34.

SECTION 7 RENEWAL PARTS ORDERING INFORMATION ..... 36.

LIST OF ILLUSTRATIONS AND TABLES

SECTION 1 INTRODUCTION AND DESCRIPTION PAGE

Figure 1-1 Stator of Kato Revolving Field Synchronous Alternating Current Generator....1.
Figure 1-2 Lead Terminals Located in Outlet Box....2.
Figure 1-3 Generator Rotor with Exciter Armature and Rotating Rectifier Assembly Installed....2.
Figure 1-4 Exciter Armature and Rotating Rectifier Assembly....2.
Figure 1-5 Exciter Stator and Windings....3.
Figure 1-6 Typical "Shielded" Bearing and Bearing Housing Construction....3.
Figure 1-7 Typical "Regreasable" Bearing and Bearing Housing Construction....3.
Figure 1-8 Block Diagram, Typical Brushless Generator - Voltage Regulator System....4.

SECTION 2 INSTALLATION

Figure 2-1 Typical Single Bearing Generator - Engine Coupling....6.
Figure 2-2 Extension of Generator Rotor Shaft for Mounting of Exciter Rotor Assembly (Outboard Exciter Generators)....6.
Table 2-1 Allowable Flywheel and Drive Disc Recess Run-out....7.
Figure 2-3 Checking Flywheel Run-out....7.
Figure 2-4 Checking Engine Flywheel Housing Run-out....7.
Figure 2-5 Single Bearing Generator Drive Plate and Adaptor....8.
Figure 2-6 SAE Flywheel....8.
Table 2-2 Recommended Torque SAE 5 Steel and SAE 8 Steel Cap Screws....9.
Figure 2-7 Typical Drive Disc to Flywheel Installation....9.
Figure 2-8 Checking Generator Shaft Run-out....9.
Figure 2-9 Procedures for Removing and Installing an Outboard Brushless Exciter Armature Assembly....11.
Figure 2-10 Procedures for Removing and Installing an Outboard Brushless Exciter Armature Assembly and PMG Rotor....12.
Figure 2-11 Testing Coupling Alignment....13.
Figure 2-12 Checking Alignment of Twin Disc Coupling....15.
Figure 2-13 Chart for Converting Megger Readings to 40 Degrees C....17.

SECTION 3 OPERATION

Figure 3-1 Synchronizing Paralleled Generators with Test Lamps....19.
Figure 3-2 Guide to Allowable Phase Unbalance....20.

SECTION 4 MAINTENANCE

Table 4-1 Preventive Maintenance Chart....21.
Figure 4-1 Testing Rotating Rectifiers with an Ohmmeter....22.
Figure 4-2 Test Lamp....22.
Figure 4-3 Full Wave Rotating Rectifier and Exciter Armature Assembly....23.
Figure 4-4 Dual Exciter Rotating Rectifier and Exciter Armature Assembly....23.

SECTION 5 TROUBLESHOOTING

Table 5-1 Troubleshooting Chart....25.

LIST OF ILLUSTRATIONS AND TABLES (CONTINUED)

SECTION 6 ASSEMBLY AND DISASSEMBLY PAGE

Figure 6-1 Removing Bearing from Generator Shaft ..... 29.
Figure 6-2 Installing Bearing on Generator Shaft ..... 29.
Figure 6-3 Removing Exciter Armature and Rotating Rectifier Assembly ..... 30.
Figure 6-4 Installing Exciter Armature and Rotating Rectifier Assembly ..... 30.
Figure 6-5a Typical Kato Single Bearing Revolving Field Brushless Generator with Outboard Exciter and Exciter Frame ..... 32.
Figure 6-5b Typical Kato Single Bearing Revolving Field Brushless Generator with Outboard Exciter Field Mounted on Endbell ..... 33.
Figure 6-6a Typical Kato Two Bearing Revolving Field Brushless Generator with Outboard Exciter and Exciter Frame ..... 32.
Figure 6-6b Typical Kato Two Bearing Revolving Field Generator with Outboard Exciter Field Mounted on Endbell ..... 33.
Figure 6-7 Kato Synchronous Brushless Revolving Field Dual Generator or Motor-Generator with Fan Mounted at Drive End ..... 35.
Figure 6-8 Kato Synchronous Brushless Revolving Field Dual Generator or Motor-Generator with Center Mounted Fan ..... 35.

SECTION 1
INTRODUCTION AND DESCRIPTION

1.1 INTRODUCTION

This manual contains instructions for installing, operating and maintaining Kato Brushless Revolving Field Generators.

Electrical connection drawings, dimensional drawings and part listings for the specific model, type and serial number of generator are usually contained as supplementary information in a separate excerpt of the generator manual. These drawings are the official source of information for making electrical connections or ordering replacement parts.

1.2 GENERAL DESCRIPTION

1.2.1 The Synchronous Alternating Current Generators described in this manual are of the brushless revolving field type of single and two bearing construction. Single bearing generators are designed for direct coupling to a stationary prime mover and two bearing generators are designed for gear, belt or flexible coupling to a stationary prime mover. The generators are manufactured in many sizes and ratings with various optional features such as enclosures, terminal boxes, bearing types, and controls. Generator excitation current is supplied from a direct connected brushless rotating DC exciter.

1.2.2 The generators may be supplied with various controls designed to provide the user's exact power needs. Controls may be contained in separate wall mounted cubicles, in free standing control cubicles, or in a control box mounted to the generator frame depending upon the number and size of the controls required or the customer's specifications.

1.2.3 Generators may be supplied with permanent magnet generators (PMG) to provide power to the regulator under short circuit conditions, or field flashing (in case generator or brushless exciter loses residual magnetism) and to reduce electromagnetic interference.

1.2.4 Generators are supplied with a side mounted terminal box which is designed to accommodate the connections to the load. Specially built oversized box can also accommodate various controls and protection devices such as the voltage regulator, surge suppressors, and current transformers. Auxiliary boxes are provided to accommodate accessory connections to RTD's, space heaters, bearing vibration sensors, exciter and PMG leads.

1.3 CONSTRUCTION

The basic generator includes frame and stator, rotor, enclosures and brushless exciters with optional permanent magnet generator mounted on the shaft to provide power to the voltage regulator.

1.3.1 The generator frame is fabricated of heavy steel members welded to the endbell or bearing bracket pilot rings. The feet are welded to the frame to simplify installation and alignment with the primer mover. Eye bolts are fastened to the frame to enable lifting of the generator with an overhead hoist. Steel wrapper cover encloses the frame assembly.

1.3.2 The generator stator core is built of laminated electrical grade steel. Laminations are secured under pressure and clamped to steel endrings. Windings are inserted into the stator slots and the entire assembly is vacuum pressure impregnated with 100 percent epoxy resin (see Figure 1-1). Stator leads terminate in standard connection lug or strap copper terminals for ease of connection to the load (see Figure 1-2).

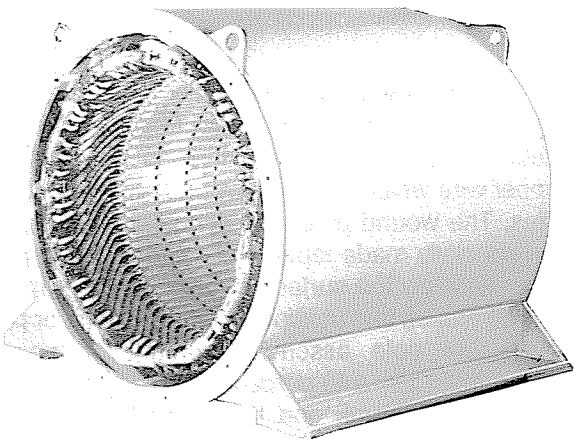

Figure 1-1
Stator of Kato Revolving Field Synchronous Alternating Current Generator

1.3.3 The generator rotor consists of the shaft, spider, fans, field poles and windings (see Figure 1-3).

1.3.3.1 The shaft is machined from high strength steel stock or forging. Mechanical center line is scribed on the drive end for units with floating bearings for proper alignment. On single bearings with forged flange holes are drilled to mate with the

engine flywheel and crankshaft.

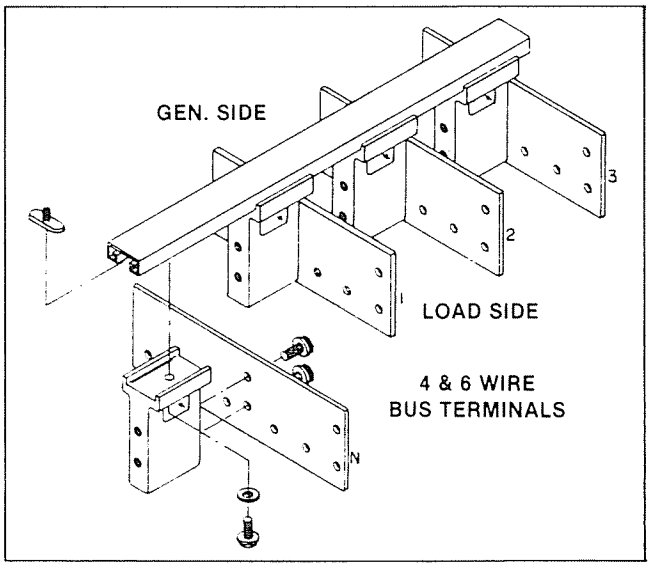

Figure 1-2
Lead Terminals Located in Outlet Box

1.3.3.2 The spider is laminated. On four pole, and small six and eight pole rotors, the spider is an integral part of the rotor pole. On other six pole and higher number of poles the spider is laminated with individual dovetails punched to anchor the field poles.

1.3.3.3 The poles are individually punched of high strength laminations which are held together with rivets or bolts. The field windings use insulated copper wire which are layer wound on the laminated poles. The wound poles are anchored to the spider with specially made tapered keys. Damper bars are inserted below the surface of the pole face and are welded/brazed to a continuous shorting ring or plate. The entire pole assembly is vacuum pressure impregnated with 100 percent epoxy resin. The rotor assembly is shrunk and keyed on the shaft. The rotor is dynamically balanced to specific limits to assure compliance to NEMA vibration limits and long bearing life. A single blower is dynamically balanced and mounted on the shaft at the drive end.

1.3.4 Brushless Exciter

The brushless exciter is an inverted synchronous AC generator with the field winding stationary and three phase armature windings rotating with the generator rotor. The AC output is rectified through a full wave semiconductor bridge (see Figures 1-4 and 1-5).

1.3.4.1 The exciter armature is built of laminations and riveted under pressure. Three phase windings are inserted in the slots and the entire assembly is vacuum pressure impregnated with 100 percent epoxy resin. The exciter armature is pressed on a tubing and keyed in position.

1.3.4.2 A three phase full wave rectifier made of three forward and three reverse diodes are mounted on two separate rings which act as negative and positive polarity heat sinks. The rectifier assembly is keyed on the same tubing as the exciter armature. Both exciter armature and rectifier assembly is dynamically balanced. The sleeve tubing is pressed and keyed on the main rotor shaft.

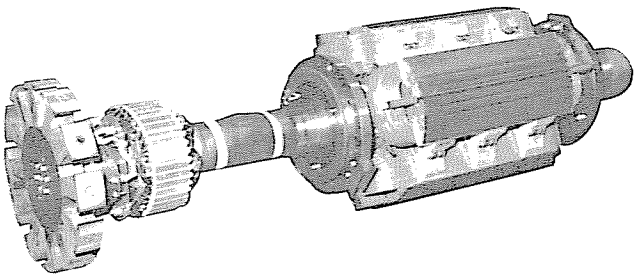

Figure 1-3
Generator Rotor with Exciter Armature and Rotating Rectifier Assembly Installed

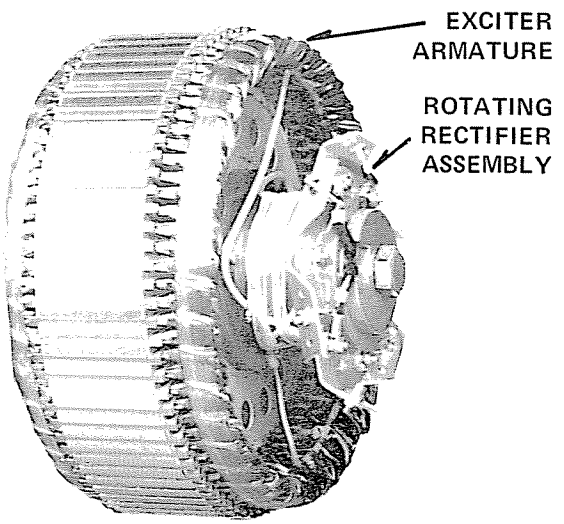

Figure 1-4
Exciter Armature and Rotating Rectifier Assembly

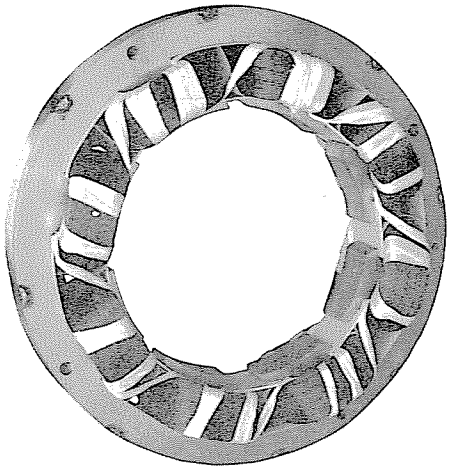

Figure 1-5
Exciter Stator and Windings

1.3.4.3 The exciter stator is built of laminations stacked under pressure and welded. Field windings are inserted and the entire assembly is vacuum pressure impregnated with 100 percent epoxy resin. The stator is mounted on the bearing bracket (endbell).

1.3.5 Permanent Magnet Generator (Optional)

The permanent magnet generator (PMG) provides power to the voltage regulator under all operating conditions regardless of the main generator output conditions. The PMG is a single phase AC generator with rotating permanent magnets providing excitation. For detailed description and operating instructions refer to Publication 350-01003-00 "Kato Pilot Exciters." The block diagram, Figure 1-8, illustrates the operation of the brushless excitation system.

1.3.6 Enclosures

Steel wrappers enclose the generator frame. A removable sheet metal covers the entire exciter assembly. Ambient air is drawn into the machine through openings at the exciter end and exhausted through screened openings enclosing the blower assembly. Enclosures can be open dripproof, splash proof, and filtered construction.

1.3.7 Bearings

Heavy duty "greased for life" double shield bearings are used on small generators less than 75 Kw. On large machines bearings are of "regreasable" design. The bearing housings are provided with grease fill and drain ports for easy lubrication (see Figures 1-6 and 1-7).

Roller bearings and sleeve bearings are also incorporated on special designs and applications. A supplementary instruction manual is included for these bearings.

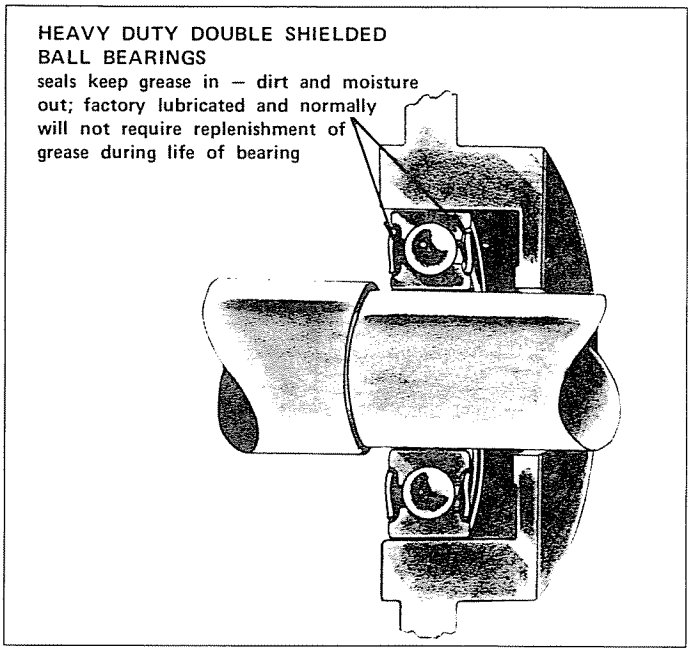

Figure 1-6
Typical "Shielded" Bearing and Bearing Housing Construction

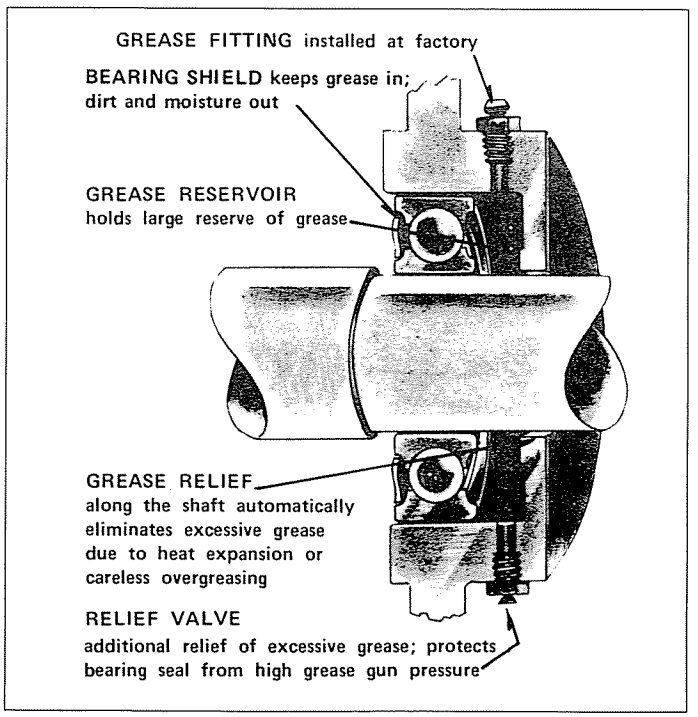

Figure 1-7
Typical "Regreasable" Bearing and Bearing Housing Construction

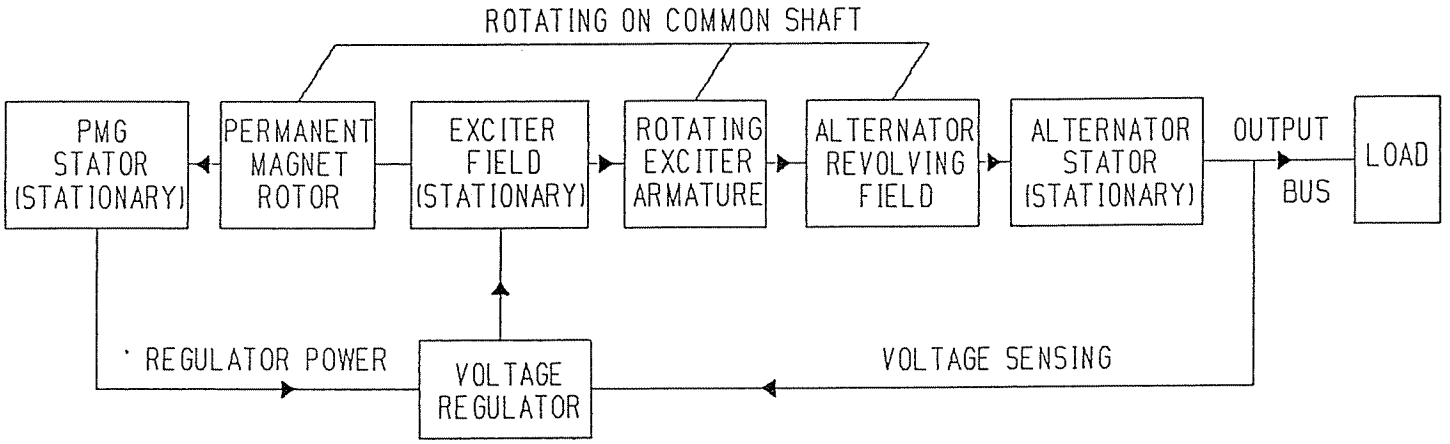

Figure 1-8
Block Diagram, Typical Brushless Generator - Voltage Regulator System

SECTION 2
INSTALLATION

2.1 RECEIVING INSPECTION

Two-bearing generators are shipped completely assembled. Single bearing units are shipped with brushless exciter armature and rectifier assembly removed from the shaft.

NOTE: Prior to accepting shipment from the transportation company, examine crating for any damage which might have occurred during transit. Report any evidence of crating damage to transportation company claims office and Kato Engineering.

If the generator is received during cold weather, allow the crated unit to reach room temperature before removing the protective packing material. This will reduce the condensation of moisture on cold surfaces and prevent early failures due to wet windings and insulating materials.

2.2 UNPACKING AND STORAGE

2.2.1 Moving Generator

Unpack the equipment with care to avoid scratching painted surfaces. Move the unit to the mounting location either by attaching an overhead hoist to the eye bolts installed on the generator frame or by lifting the generator form underneath the skid with a forklift. Hoist and hoist cables should have a rating of not less than 1-1/2 times the weight of the generator. When moving unit with a forklift, make certain it is completely onto and balanced on the forklift tines.

WARNING

Apply lifting force to structural points specifically provided for that purpose. DO NOT USE enclosure lifting holes to lift the whole unit. Use lifting means adequate for the weight. Failure to observe these instructions can result in injuries to personnel and damage to the generator.

2.2.2 Rotor Support

All single bearing generators are shipped from factory with rotor shipping support blocking bolted across the drive discs and adaptor. Before transporting any generator, the main rotor must be supported by the adaptor using an appropriate fixture.

CAUTION

Do not attempt to transport any single bearing generator without proper rotor support. Failure to observe this precaution can result in extensive equipment damage. Make certain exciter rotor is removed while handling generator.

2.2.3 Storage

2.2.3.1. Short Term Storage

If the generator is not to be installed in its operating location immediately, it is recommended that it be stored in a clean dry area not affected by rapid changes in temperature and humidity. If space heaters are supplied, they should be energized to keep condensation from the windings. All accessory equipment supplied with the unit should be stored with the generator, and the combined unit covered with durable cover for protection against dust, dirt, moisture and other airborne contaminants.

2.2.3.2. Long Term Storage

Units which are to be in storage for a period longer than six months should be prepared for storage as follows:

a. Install desiccant bags in the exciter cover and inside the fan screen.
b. Vacuum seal the unit in a covering of plastic or other material designed for that purpose.
c. Adequately tag the generator to insure that preservative greases and desiccant bags are removed before the unit is placed in operation.

2.2.4 Bearing Inspection

Grease used in ball bearing generators is subject to time deterioration. If the generator is stored for one year or longer, it is recommended that new ball bearings be installed and greased to the proper level before putting into operation. If inspection indicates that bearings are free of rust or corrosion,, and no noise or excessive vibration appear on start-up, replacement is not necessary.

2.3 LOCATION

The location of the generator must comply with all local and special industrial regulations. Attempt to locate the generator in clean, dry, well ventilated area, easily accessible for inspection and maintenance. Air inlet and discharge openings must not be obstructed to the flow of

accessible for inspection and maintenance. Air inlet and discharge openings must not be obstructed to the flow of coolant air. If the location is subject to harsh environmental conditions, the generator can be field modified to incorporate dust filters and space heaters. In addition it is recommended that a more rigid periodic maintenance be established.

2.4 ASSEMBLY TO PRIME MOVER

2.4.1 Assembling Single Bearing Generator to Prime Mover

See Figure 2-1 for typical method of coupling single bearing generator to prime mover. The generator and prime mover should be mounted on a rigid level base. The following steps describe the assembly work:

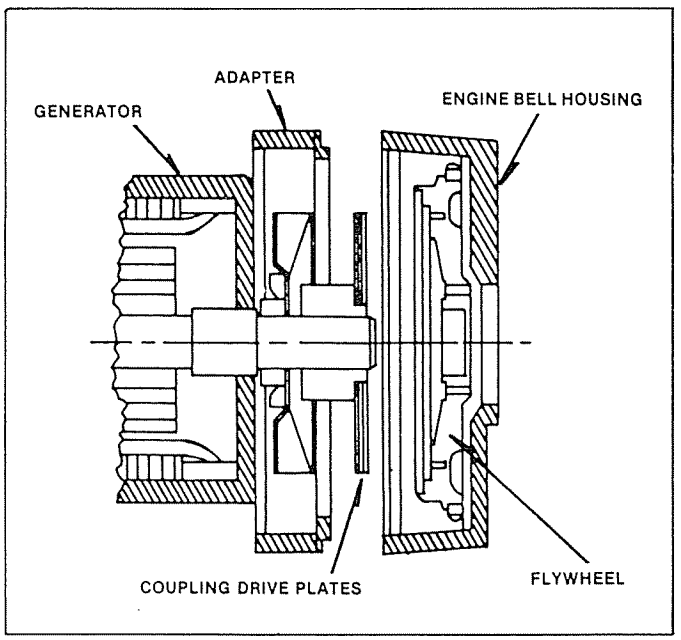

Figure 2-1
Typical Single Bearing Generator-Engine Coupling

2.4.1.1 Before assembling generator to prime mover, remove exciter cover and adaptor cover or screen. Remove blocking holding the drive discs to the adaptor.

NOTE: If exciter armature and rotating rectifier assembly was not installed (shipped as loose equipment), do not install it until the generator has been assembled to the prime mover.

2.4.1.2 Before assembling generator to the prime mover, check to make certain generator bearing and clearance is sufficient. GENERATOR BEARING END CLEARANCE SHOULD NOT BE LESS THAN TOTAL ENGINE CRANKSHAFT AXIAL MOVEMENT PLUS 1/16 INCH.

NOTE: Generator shipped from factory with approximately 1/8 inch minimum bearing end clearance.

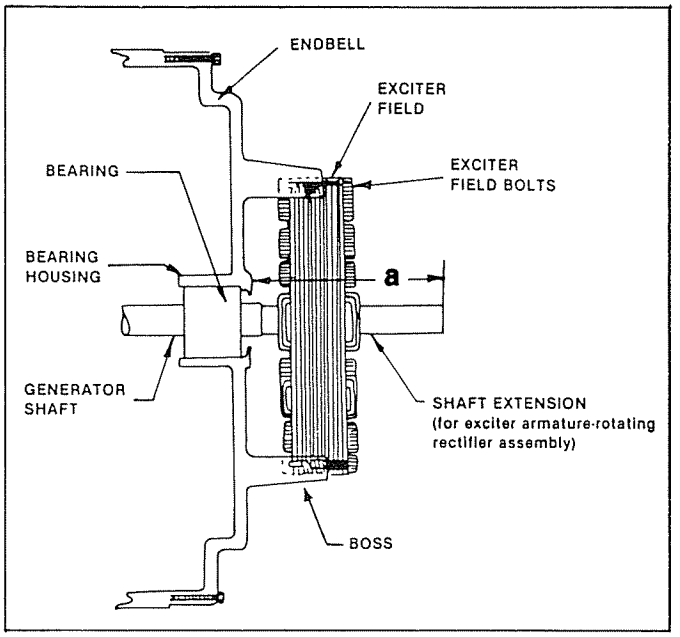

Figure 2-2
Extension of Generator Rotor Shaft for Mounting of Exciter Rotor Assembly (Outboard Exciter Generators)

Before attempting to mount the generator to the engine, measure the distance from the end of the exciter shaft extension to the bearing housing on the endbell as shown on Figure 2-2. This dimension is recorded on Section P-1 of the Assembly Manual. If the dimensions do not match, move the rotor axially relative to the stator until dimensions are identical.

2.4.1.3 Check the run-out of the prime mover flywheel and flywheel housing (bell housing) with a dial indicator as shown in Figures 2-3 and 2-4. TOTAL INDICATOR READING SHOULD NOT EXCEED .003 INCH PER EACH FOOT OF DIAMETER OF FLYWHEEL AND BELL HOUSING, SEE TABLE 2-1. If reading exceeds the allowable limit, excessive vibration could result. Contact the prime mover manufacturer for recommendations.

TABLE 2-1
Allowable Flywheel & Drive Disc Recess Run-out

FLYWHEEL DRIVE DISC RECESS		
Pilot Diameter	Nominal Clutch Dia.	Allowable Runout (Total Indicator Reading)
6½	8.500	.002
7½	9.500	.002
8	10.375	.002
10	12.375	.003
11½	13.375	.003
14	18.375	.004
16	20.375	.005
18	22.500	.005
21	26.500	.006
24	28.875	.007

FLYWHEEL HOUSING		
SAE Housing Number	Housing Inside Dia.	Allowable Runout (Total Indicator Reading)
6	10.500	.002
5	12.375	.003
4	14.250	.003
33	16.125	.004
2	17.625	.004
1	20.125	.005
½	23.000	.005
0	25.500	.006
00	31.000	.007

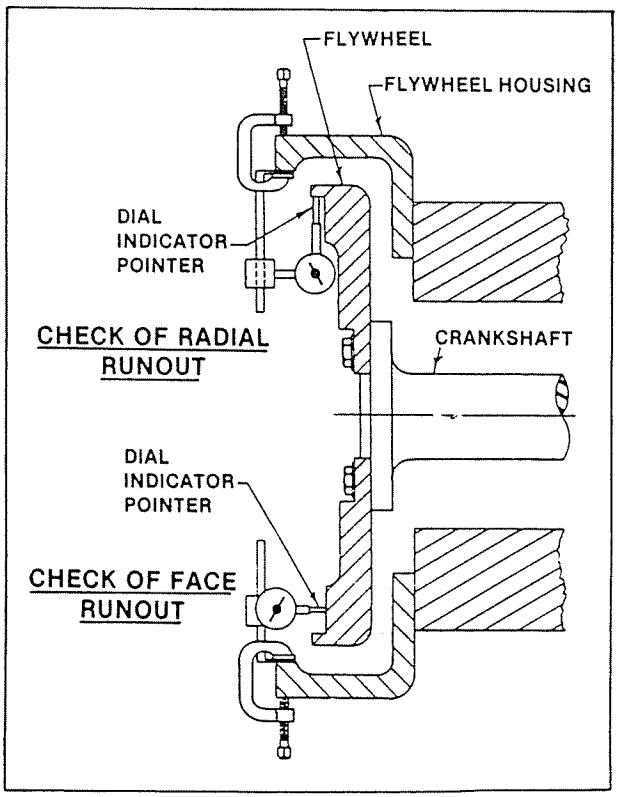

Figure 2-3
Checking Flywheel Run-out

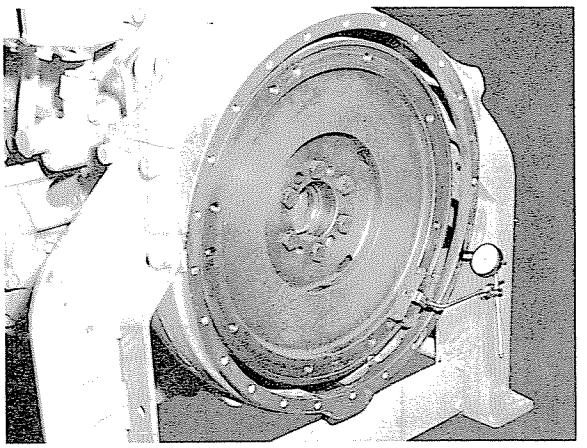

Figure 2-4
Checking Engine Flywheel Housing Run-out

2.4.1.4 Measure the axial distance from the surface on the generator adaptor that bolts to the prime mover flywheel housing to the outside surface on the drive disc coupling plates (Dimension "Y" Figure 2-5).

Also measure the axial distance from the machined surface on the prime mover flywheel housing to the bottom of the drive disc recess in the flywheel (Dimension "G" Figure 2-6). Contact factory if difference in dimensions "G" in Figure 2-6 and "Y" in Figure 2-5 exceed 1/32 inch. If "G" is more than "Y" install additional spacers between drive discs and generator drive hub. If "Y" is more than "G", remove spacers located between the drive discs and generator drive hub (see Figure 2-7).

2.4.1.5 Make certain drive discs "seat" in the drive disc recess of flywheel.

CAUTION

Never grind OD of drive discs or attempt to "drill out" holes in drive discs. If drive discs do not fit properly, order new discs or flywheel after carefully checking the dimensions of both parts.

2.4.1.6 Use lock-washers on all bolts used to secure the generator to engine and base. Use recommended torque values for each type of cap screws given in Table 2-2. If the bolts that secure the drive discs to the flywheel cannot be installed due to insufficient clearance between fan and drive disks, it may be necessary to loosen and move fan.

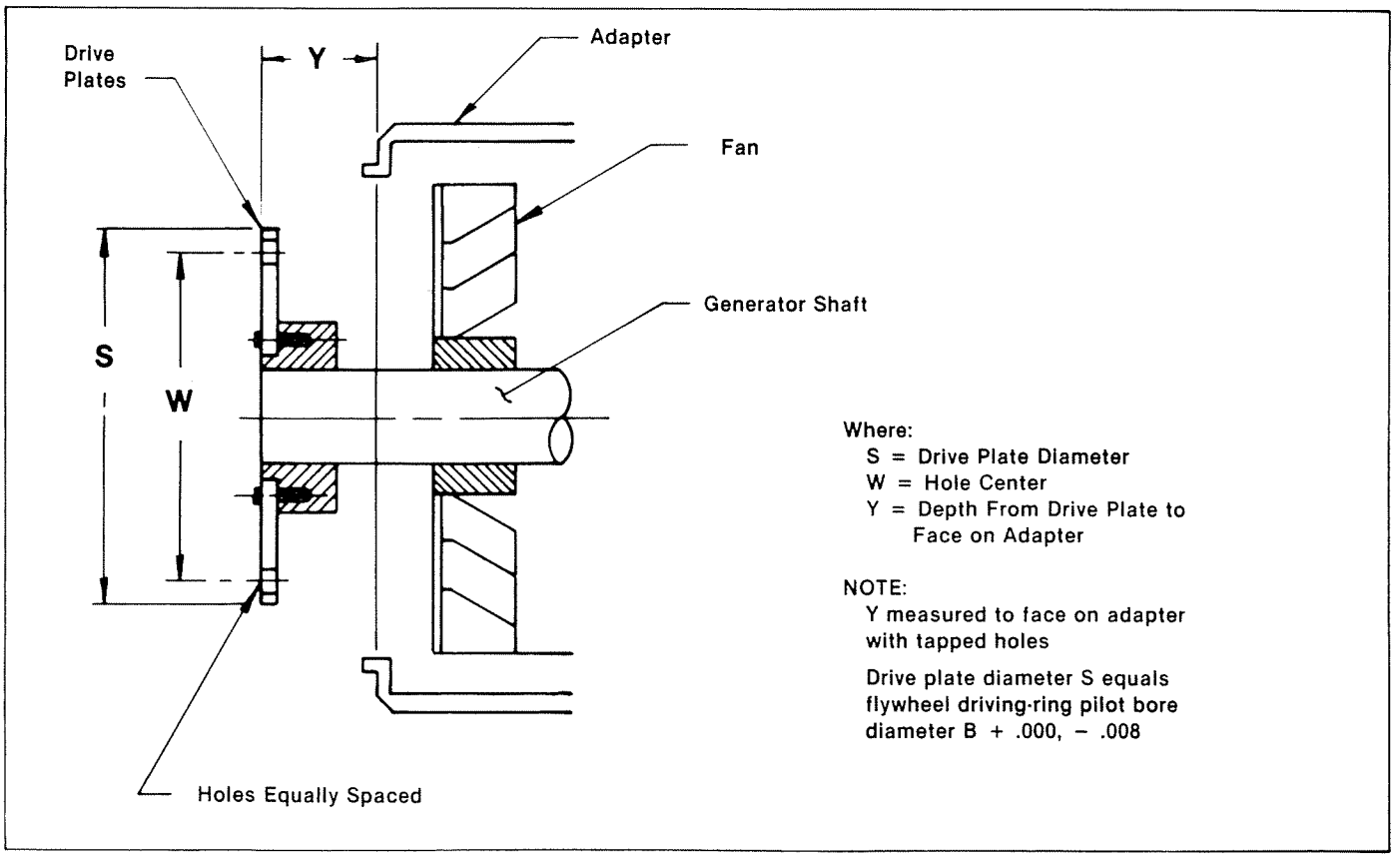

Figure 2-5
Single Bearing Generator Drive Plate and Adaptor

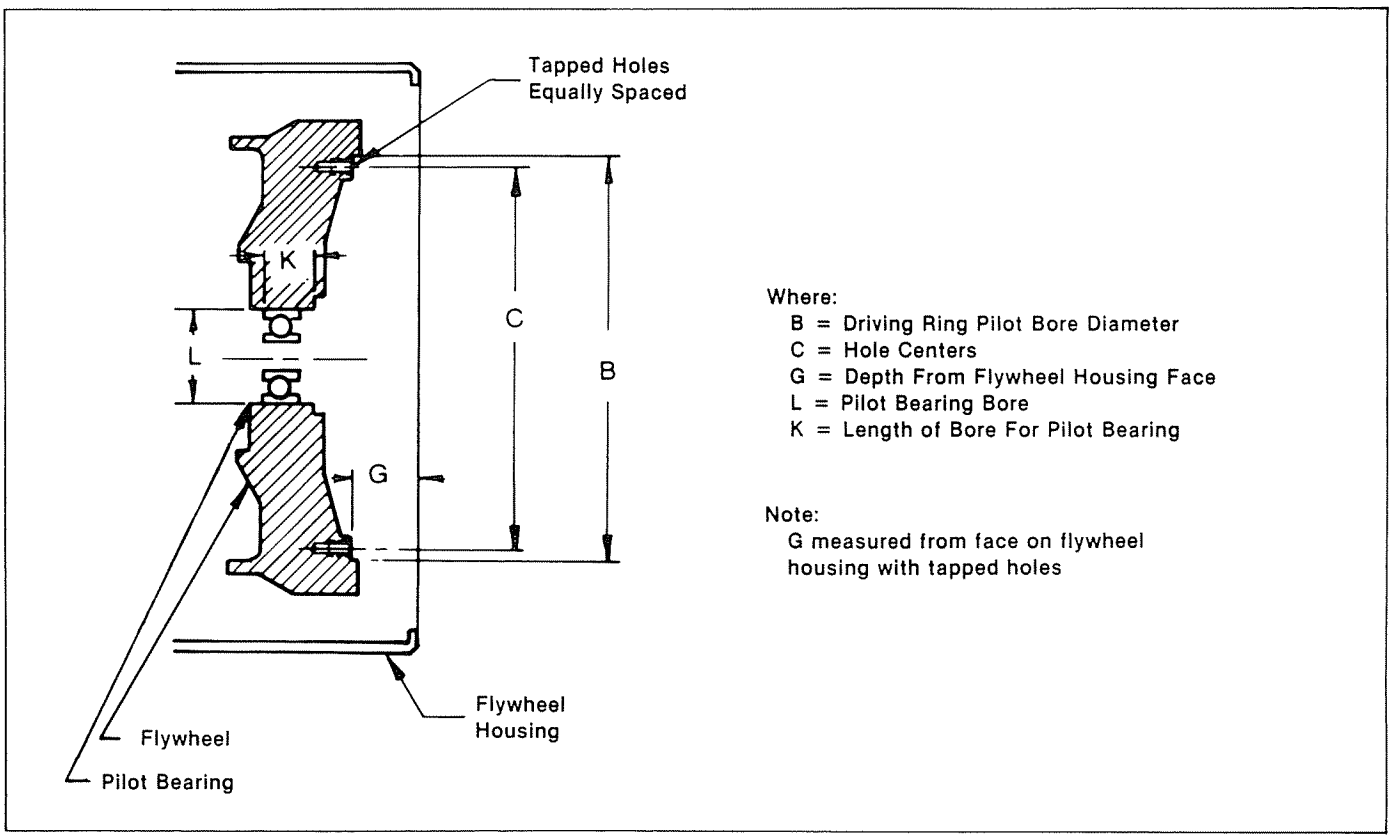

Figure 2-6
SAE Flywheel

Table 2-2
Recommended Torque SAE 5 Steel and SAE 8 Steel Cap Screws

Shank Diameter (in inches)	Recommended Torque (in foot pounds)	
	A.S.T.M. A449 S.A.E. 5 Steel	S.A.E. 8 Steel
1/4	9	13
5/16	18	28
3/8	31	46
7/16	50	75
1/2	75	115
9/16	110	165
5/8	150	225
3/4	250	370
7/8	378	591
1	583	893
1 1/8	782	1410
1 1/4	1097	1964
1 3/8	1461	2633
1 1/2	1748	3150

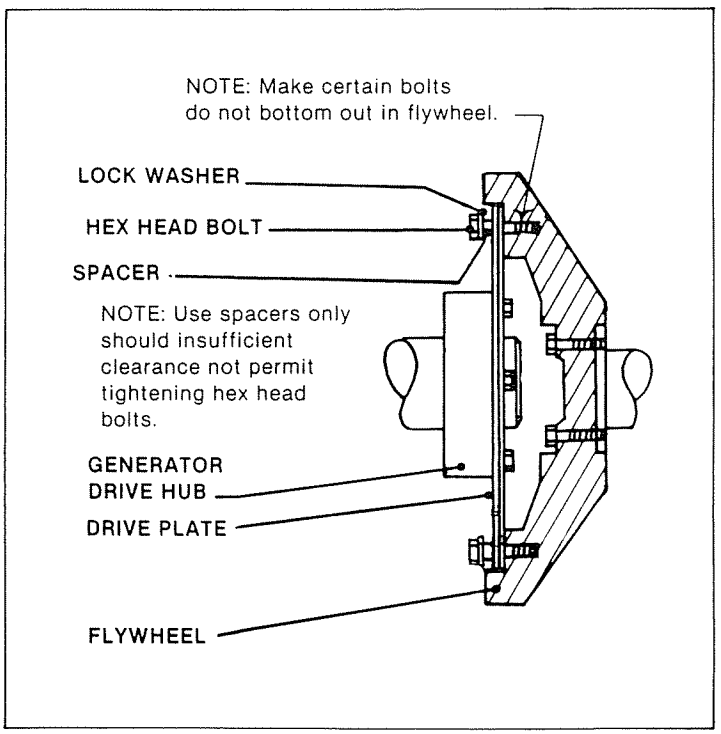

Figure 2-7
Typical Drive Disk to Flywheel Installation

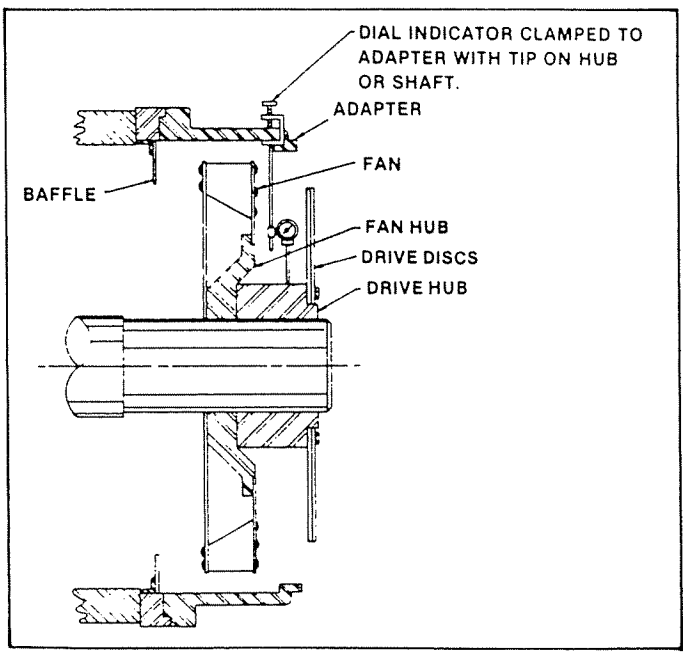

Figure 2-8
Checking Generator Shaft Run-out

CAUTION

If fan is moved, make certain that before generator set is placed in operation, fan is positioned with about 1/2 inch clearance between fan and baffle and all fan bolts are installed and tightened.

NOTE: Check to make ceratin bolts do not bottom out in flywheel. If bolts are too long or cannot be tightened with socket or box wrench, use 1/4 to 3/8 inch long spacers inserted on the bolts as shown in Figure 2-7 to increase the clearance between the bolt head and the flywheel.

2.4.1.7 Before installing the fan screen, check run-out of the generator shaft. Check run-out by placing the base of the dial indicator on the generator frame rib end positioning the indicator finger on the shaft as shown in Figure 2-8. Total shaft run-out should not exceed .003 inch. If this figure is exceeded, remove drive disc bolts and rotate generator relative to the engine flywheel. Reinstall bolts and check run-out again.

2.4.1.8 Make sure generator mounting pads contact the base evenly and with equal pressure. Use shims if necessary. Recheck shaft end to endbell distance (Dimension "a" in Figure 2-2).

2.4.1.9 Mount the brushless exciter armature and rotating rectifier assembly to the generator shaft. The exciter rotor unit is held in place on the shaft by a key in the shaft and a bolt and washer at the end of the shaft. Install key in the machined keyway on the generator shaft. Align exciter rotor unit with key and push the exciter rotor unit onto the shaft. Install washer and retaining bolt. Torque bolt with 1/2 inch shank diameter 60 ft-lbs, 3/4 inch shank diameter bolt 200 ft-lbs. See Figure 2-9 and 2-10.

DO NOT APPLY FORCE TO THE ROTATING ASSEMBLY OR EXCITER ARMATURE WINDING.

Inspect the clearance between stationary and rotating parts. Connect positive (+) and negative (-) leads from generator field onto positive (+) and negative (-) terminals located on the aluminum heat sinks of rotating rectifier assembly.

2.4.1.10 Turn engine several revolutions. Use a crank or barring device but do not pry on the fan. Visually inspect clearance between generator stationary and rotating parts. Listen for unusual noises such as produced by parts rubbing together.

FIGURE 2-9

PROCEDURES FOR REMOVING AND INSTALLING AN OUTBOARD BRUSHLESS EXCITER ARMATURE ASSEMBLY

WARNING
Make certain generator is stopped. Wear gloves to protect fingers when removing or installing parts.

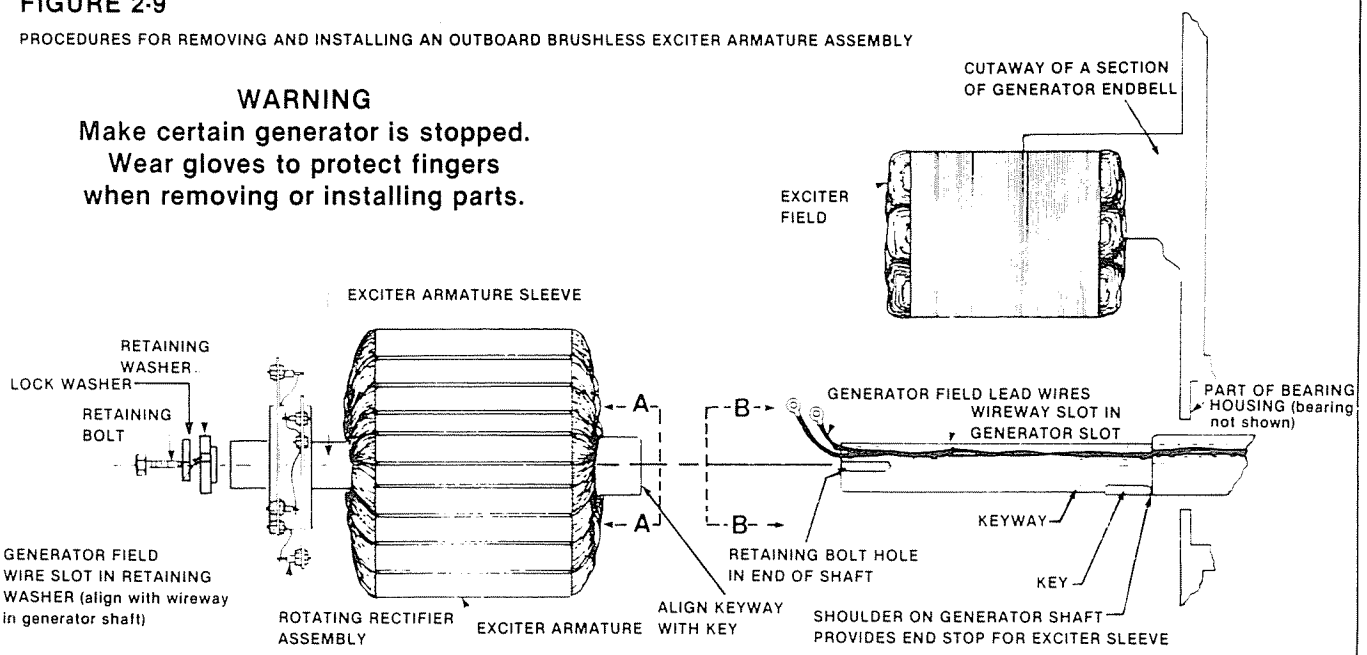

REMOVAL

1. Remove exciter cover.
2. Remove retaining bolt and washer.
3. Disconnect (+) and (−) generator field wires at (+) and (−) terminals on rotating rectifier assembly heat sinks.
4. Slowly pull exciter armature rotating rectifier assembly, as a unit, off of the generator shaft. Make certain generator field wires are flat in wireway in generator shaft and are not accidently torn when exciter is pulled.

CAUTION: Do not pull on edges of heat sinks or on exciter armature windings.

NOTE: If exciter armature will not pull from generator shaft by hand force, refer to generator instruction manual for proper installation of mechanical pullers.

5. Remove key from keyway in generator shaft.

INSTALLATION

1. Clean inside of exciter sleeve and outside of generator shaft.
2. Place key in the keyway in generator shaft.
3. Lay generator field wires flat in wireway in generator shaft with wire ends protruding past the end of the generator shaft.
4. Position the exciter armature rotating rectifier assembly in line with generator shaft and turn assembly to position where keyway in the exciter sleeve is in line with the key in generator shaft.
5. Using hand force, push the exciter armature rotating rectifier assembly over the generator shaft.

NOTE: Final position is with end of exciter sleeve against shoulder on generator shaft. It may be necessary to tap lightly on end of exciter sleeve in order to move the assembly over the key. Use a fiber or rubber mallet.

6. Connect (+) and (−) generator field wires onto (+) and (−) terminals on heat sinks.
7. Install retaining washer and bolt. Make certain generator lead wires are through slot in washer.
8. Torque the retaining bolt. Recommended torque is 60 foot/pounds for ½ inch diameter bolt and 200 foot/pounds for ¾ inch diameter bolt.
9. Use a feeler gauge to measure air gap between exciter armature and exciter field.
10. If air gap is less than recommended minimum check the following: (1) check generator to engine alignment; (2) if unit has been in operation, check for excessive bearing wear; (3) if generator has been taken apart and reassembled, check endbell and exciter field for loose mounting bolts and misalignment.
11. Install exciter cover when air gap is satisfactory.

AUXILIARY VIEW A-A
END VIEW OF EXCITER ARMATURE SLEEVE



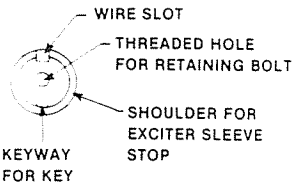

AUXILIARY VIEW B-B
CUTAWAY OF GENERATOR SHAFT — EXCITER END OF UNIT

Exciter Air Gap (Minimum)

Exciter Armature Diameter (in inches)	Minimum Air Gap (in inches)
5 3/4	0.014
9 7/8	0.014
12 1/2	0.018
16 1/4	0.035

FIGURE 2-10

PROCEDURES FOR REMOVING AND INSTALLING AN OUTBOARD BRUSHLESS EXCITER ARMATURE ASSEMBLY AND PMG ROTOR

WARNING

Make certain generator is stopped. Wear gloves to protect fingers when removing or installing parts.

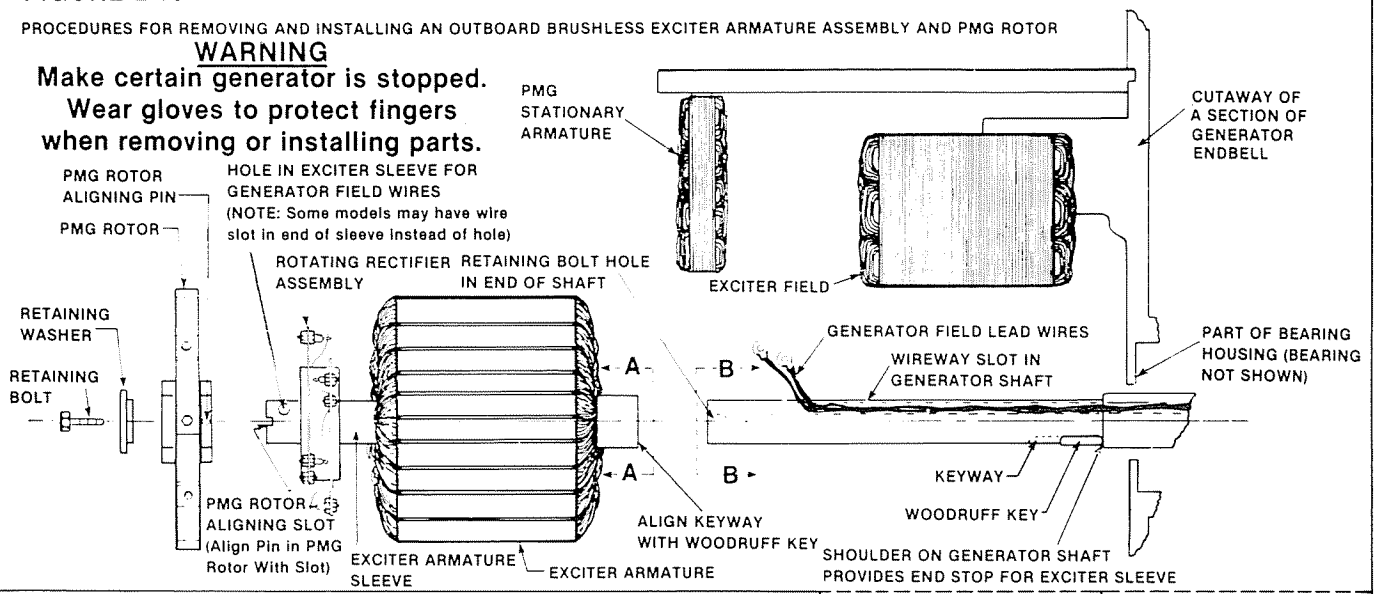

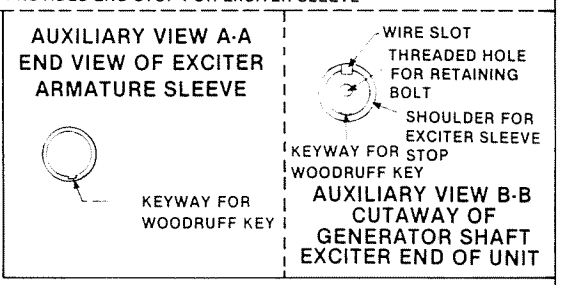

REMOVAL

1. Remove exciter cover.
2. Remove retaining bolt and washer.
3. Disconnect (+) and (−) generator field wires at (+) and (−) terminals on rotating rectifier assembly heat sinks.
4. Pull PMG rotor. The PMG rotor can be removed using hand force, however, the magnetic pull of the PMG rotor toward the exciter armature sleeve and the PMG armature must be overcome.
5. Slowly pull exciter armature rotating rectifier assembly, as a unit, off of the generator shaft. Feed generator field wires through wire hole in exciter sleeve while pulling exciter armature rotating rectifier assembly from the generator shaft.

CAUTION: Do not pull on edges of heat sinks or on exciter armature windings.

NOTE: If exciter armature will not pull from generator shaft by hand force, refer to generator instruction manual for proper installation of mechanical pullers.

6. Remove woodruff key from keyway in generator shaft.

INSTALLATION

1. Clean inside of exciter sleeve and outside of generator shaft.
2. Place woodruff key in the keyway in generator shaft.
3. Lay generator field wires flat in wireway in generator shaft.
4. Position the exciter armature rotating rectifier assembly in line with generator shaft and turn assembly to position where keyway in the exciter sleeves is in line with woodruff key in generator shaft.
5. Using hand force, push the exciter armature rotating rectifier assembly over the generator shaft. When it is part of the way onto the shaft, start the generator field wires through wire hole or slot in the exciter sleeve.
6. Push exciter armature rotating rectifier assembly the rest of the way onto the shaft while pulling lightly on ends of generator field wires in order to keep them straight in wireway in generator shaft.

NOTE: Final position is with end of exciter sleeve against shoulder on generator shaft. It may be necessary to tap lightly on end of exciter sleeve in order to move the assembly over the woodruff key. Use a fiber or rubber mallet.

7. Connect (+) and (−) generator field wires onto (+) and (−) terminals on heat sinks.
8. Place PMG rotor onto end of exciter sleeve.

CAUTION: Make certain PMG rotor pin is aligned with pin slot in end of exciter sleeve.

9. Install retaining washer and bolt.
10. Use feeler gauge to measure air gap between exciter armature and exciter field. Minimum air gap is 0.014 inch.
11. Use a feeler gauge to measure air gap between PMG rotor and PMG armature. Minimum air gap is 0.020 inch.
12. If air gap is less than recommended minimum, check the following: (1) check engine alignment; (2) if unit has been in operation, check for excessive bearing wear; (3) if generator has been taken apart and reassembled, check endbell and exciter field for loose mounting bolts and misalignment.
13. Install exciter cover when air gap is satisfactory.

2.4.2 Assembling Two Bearing Generator to Primer Mover

2.4.2.1 Install shims if necessary to properly level and align the generator to the primer mover.

2.4.2.2 Install coupling hubs on generator and drive shafts in accordance with the installation procedures specified by the coupling manufacturer. Check for angular and parallel alignment as shown in Figure 2-11 using dial indicator.

2.4.2.3 To check for parallel shaft (run-out) misalignment, bolt the indicator to one of the coupling halves and scribe the position of the dial button on the opposite coupling half. Rotate both shafts simultaneously, keeping the finger or button of the indicator at the reference mark on the coupling hub. Note the reading on the indicator dial at each one quarter revolution. A variation of readings at different positions will indicate how the machine should be adjusted to obtain maximum misalignment of .002 inch. Place or remove slotted shims from under engine or generator mounting pads until properly aligned.

2.4.2.4 To check to angular misalignment, fasten the dial indicator to one half of the coupling hub and a reference surface fastened to the other coupling half. Scribe the location of the dial button on the reference surface and take all readings with the indicators at this position. Rotate both shafts simultaneously, note the reading at each quarter revolution.

ANGULAR MISALIGNMENT OF THE SHAFTS MUST NOT EXCEED .001 INCH FOR EACH INCH OF RADIUS OF THE COUPLING HUB, TOTAL INDICATOR READING.

2.4.2.5 Tighten the mounting bolts and recheck alignment. If alignment is within the above tolerance, check coupling manufacturer's recommendation for lubrication and bolting information.

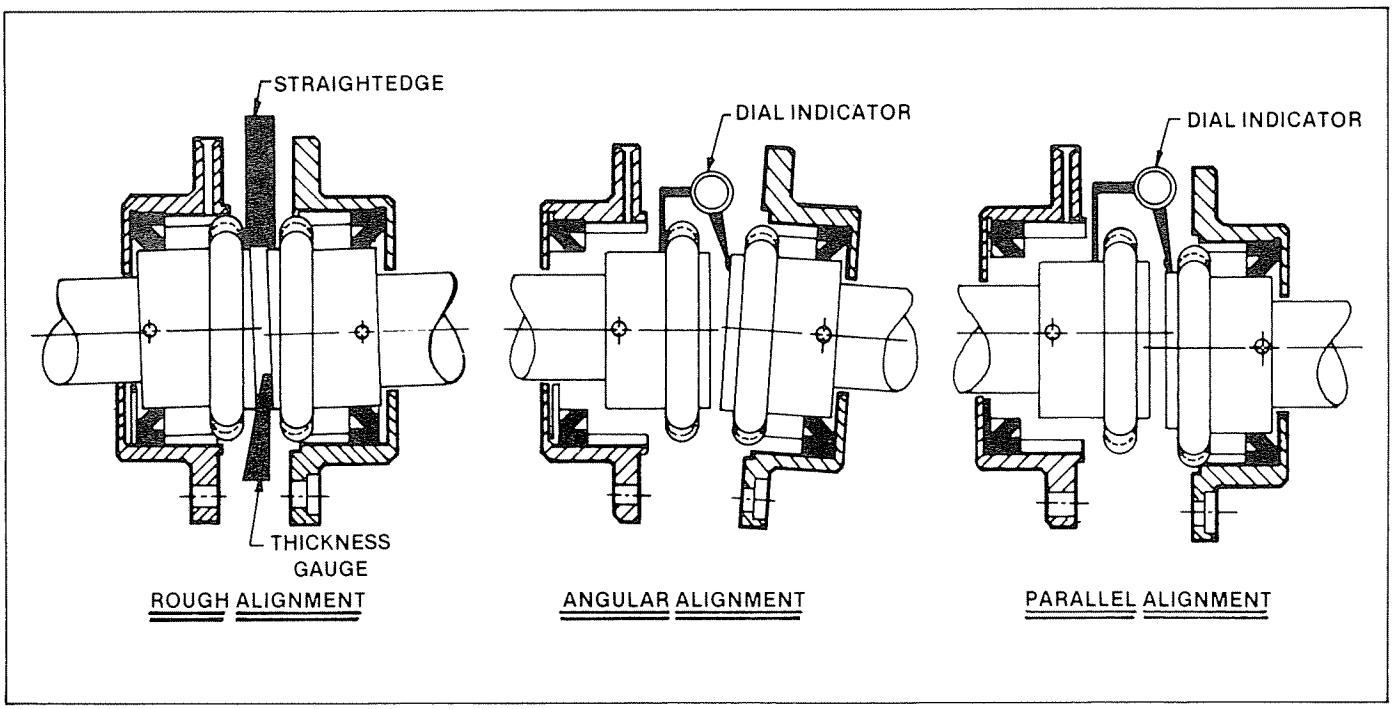

Figure 2-11
Testing Coupling Alignment

2.5 BELT DRIVES - GENERAL INFORMATION

Proper alignment and tightness of belt drives is essential. Improper alignment and belt tightness will increase belt wear as well as increase bearing loads and vibration. Select belt drive in accordance with belt manufacturer's specifications. Make certain generator and prime mover are rigidly mounted. In general, belt drives are not recommended when belt speed exceeds 5000 feet per minute.

2.6 V-BELT

2.6.1 Use only matched belt sets and avoid minimum pitch sheaves and belts. Follow the manufacturer's specifications or NEMA limits for sheave pitch.

2.6.2 Make certain the shaft axis of the prime mover and generator are paralleled. Belts must enter and leave sheaves with no side bending. Tighten just enough to prevent slippage at full load. Never grease or use belt dressing on belts.

2.7 FLAT BELT

Selection of belts and pulleys of ample width will reduce amount of tension required to prevent slippage at full load. Lower belt tension reduces bearing loads and belt wear.

2.8 GEAR BELTS (TIMING BELTS)

In general, installation of gear-belts will be the same as for flat belts. The following precautions should be taken when installing a gear-belt drive.

2.8.1 Gear-belts should be installed with snug fit, neither too tight not too loose. High initial tension is not necessary but when torque is unusually high a loose belt may "jump grooves." If the belt "jumps the grooves," the tension should be increased gradually until satisfactory operation is attained.

2.8.2 Be sure that shafts are parallel and pulleys are in alignment. On a long center drive, because of the tendency of the belt to run against one flange, it is sometimes advisable to offset the driven pulley to compensate.

2.8.3 On a long center drive it is imperative that belt sag is not enough to permit teeth on the slack side to engage the teeth at the tight side.

2.8.4 It is important that both prime mover and generator are mounted rigidly to prevent variation in belt tension.

2.8.5 Although belt tension requires little attention after initial installation, provision should be made for some center distance adjustment to ease in installing and removing belt. Do not force belt over flange of pulley.

2.9 GEAR AND FLEXIBLE COUPLINGS - GENERAL INFORMATION

When drives of these types are used instead of belt drives the prime mover and generator shafts must be carefully aligned and following alignment, the set must be firmly mounted to a rigid base to prevent misalignment of the unit shafts during operation. Excessive misalignment may be the cause of vibration, noisy operation, excessive coupling or gear wear or premature bearing failure.

2.10 GEAR DRIVE

2.10.1 Accurate alignment and rigid mounting are essential for satisfactory operation with gear drives. Pitch diameter and width should not be outside recommended NEMA limits and AGME Standards. Avoid coupling which will impose excessive thrust on bearings.

2.10.2 Check for backlash through at least one revolution of shaft. Backlash at tightest point should be in accordance with AGME Standards. Avoid engagement of teeth so deep that they will bind or deflect.

2.11 INSTALLATION AND ALIGNMENT OF FLEXIBLE COUPLED DRIVES

2.11.1 The procedures outlined are for aligning flexible coupled drives. Follow the tolerances specified by the coupling manufacturer when less than described in this manual.

2.11.2 Install coupling hubs on generator and drive shafts in accordance with the installation procedures supplied by the manufacturer of the coupling. Then check for angular misalignment by scribing a reference mark on the coupling hub at the button or finger of the indicator to mark its position on the hub. Rotate both shafts simultaneously, keeping the finger or button of the indicator at the reference marks on the coupling hub. Note the reading on the indicator dial at each one-quarter revolution. Refer to Figure 2-11 for test setup.

ANGULAR MISALIGNMENT OF THE SHAFTS MUST NOT EXCEED .001 INCH FOR EACH INCH OF RADIUS OF THE COUPLING HUB, TOTAL INDICATOR READING.

2.11.3 If angular misalignment is excessive, loosen set mounting bolts and place slotted shims under mounting pads, as necessary, to correct alignment. Re-check alignment. Install or remove shims from under the mounting pads until aligned.

2.11.4 Check for parallel shaft (run-out) alignment by scribing a reference mark on the ground or machine diameter of the coupling hub at the finger or button of the indicator. Rotate both shafts simultaneously, keeping the button or finger of the indicator at the reference mark on the hub. Note the reading on the indicator dial at each one-quarter revolution. Refer to Figure 2-11 for test setup.

TOTAL RUN-OUT BETWEEN HUBS SHOULD NOT EXCEED .002 OF AN INCH.

2.11.5 When run-out between hubs is excessive, install or remove shims from under each of the prime mover or generator mounting pads; then re-check alignment. Add or remove shims until shafts are parallel. Tighten the set mounting bolts following angular and run-out alignment. Check base mounting bolts for tightness. Re-check alignment before installing coupling.

2.12 FLYWHEEL AND TWIN DISC CLUTCH OR OTHER FLEXIBLE COUPLING

A flywheel and twin disc clutch coupling provides a satisfactory coupling for motor-generator sets operating with shaft speeds not in excess of 3760 RPM. The coupling should be parallel between the spider and the rings. Align within .03 inch total indicator reading between spider and ring by installing or removing shims, as necessary, from under motor or generator mounting pads (see Figure 2-12).

2.13 VIBRATION

After alignment of prime mover to generator has been completed, run unit at no load and check for excessive vibration. If vibration is excessive loosen one mounting bolt slightly and if vibration decreases, add shims until tightening of bolt reduces or eliminates vibration. Repeat in turn for all mounting bolts.

NOTE

Vibration of direct coupled engine driven generators may be due to improper installation of generator to engine. If excessive vibration of engine driven generator is note, review the installation procedure.

2.14 DOWELING

Doweling generator sets will prevent movement of the units during operation should the mounting bolts loosen slightly. Install dowels as follows.

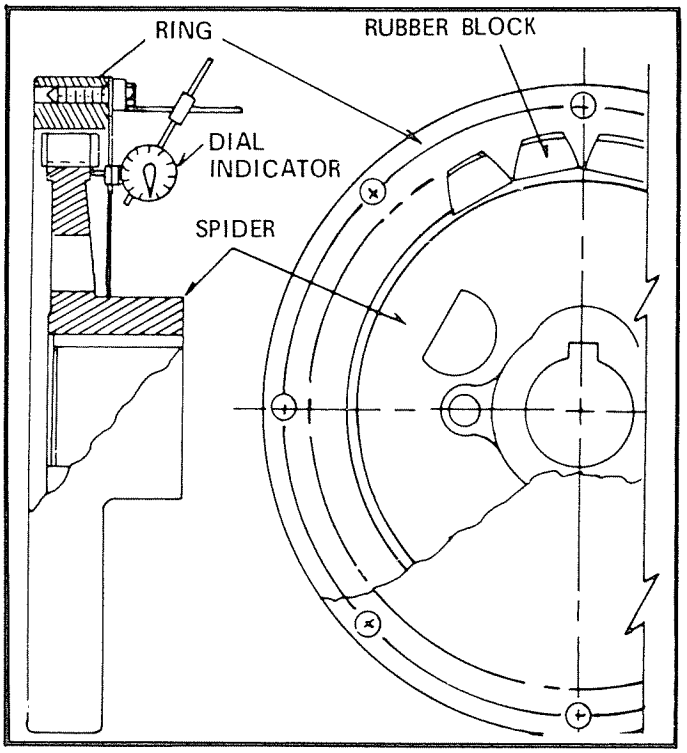

Figure 2-12
Checking Alignment of Twin Disc Coupling

2.14.1 Check the alignment after the generator set has been in operation about 40 hours. Correct alignment if not satisfactory (refer to preceding paragraphs).

2.14.2 Through opposite generator pads drill holes through and into the base. Holes should have a diameter slightly smaller than the dowel pin.

2.14.3 Ream the holes to the proper diameter for the pints, clean out chips and then install pins.

2.14.4 Repeat procedure for doweling of prime mover according to instructions supplied by the primer mover manufacturer.

2.15 ELECTRICAL MEASUREMENTS AND CONNECTIONS

In the event the generator was subjected to rapid changes in temperature or freezing or wet climate during shipment or storage, it is recommended that the insulation resistance of each winding be measure.

CAUTION

These tests should be conducted before any power and control connections are made.

2.15.1 Exciter Field

2.15.1.1 Disconnect the exciter leads from the terminals in the terminal box.

2.15.1.2 Connect exciter leads to one clamp of 500 volt megger and connect the other clamp to the generator frame.

2.15.1.3 Apply 500 volts from the megger and measure the resistance reading after one minute. The minimum reading should be 1.0 megohm. If not, refer to dry out procedures.

2.15.1.4 Short the exciter field leads to the generator frame for several minutes after the megger has been disconnected. This will allow the voltage build up to be properly discharged.

2.15.2 Exciter Armature

2.15.2.1 Disconnect the exciter armature leads from the rotating rectifiers. Disconnect the generator field leads from the positive and negative rectifier heat sinks.

2.15.2.2 Never apply megger to rotating rectifiers. Connect the leads of exciter armature to one clamp of a 500 volt megger and connect the other clamp to suitable connection on the shaft.

2.15.2.3 Record the megohm reading after one minute of applying 500 volts.

2.15.2.4 One minute reading must be a minimum of 1 megohm. If not, refer to dry out procedures.

2.15.2.5 Ground the exciter leads to the shaft after disconnecting the megger.

2.15.3 Generator Rotor Winding

2.15.3.1 Connect the positive and negative leads to one clamp of the 500 volt megger and connect the other clamp to the shaft.

2.15.3.2 Record the megohm reading after one minute of applying 500 volts.

2.15.3.3 One minute reading must be a minimum of 1 megohm. If not, refer to dry out procedures.

2.15.3.4 Ground the field leads to the shaft after disconnecting the megger.

2.15.4 Generator Stator

2.15.4.1 Disconnect power connections, if any, and all control apparatus from the generator terminals.

2.15.4.2 Measure insulation resistance of each phase separately with the two phases shorted to the frame.

2.15.4.3 Use a 500 volt megger connected between the lead of the phase to be measured and generator frame. The minimum one minute insulation resistance (corrected to 40 degrees centigrade) should not be less than that given by the following formula:

$$\text{Resistance in megohms} = \frac{\text{Rated generator voltage}}{1000} + 1$$

If less than above, refer to dry out procedure.

2.15.4.4 Ground the leads to the frame after the one minute megger test.

NOTE: The insulation resistance value increases with decreasing winding temperatures. All readings must be referenced to winding temperatures. Use Figure 2-13 for converting megger readings to other temperatures.

2.15.5 Drying Methods

If the insulation resistance readings are below the recommended minimum values specified previously, use one of dry out methods described below. The method selected should be based on the size and location of the unit, and available equipment with experienced personnel.

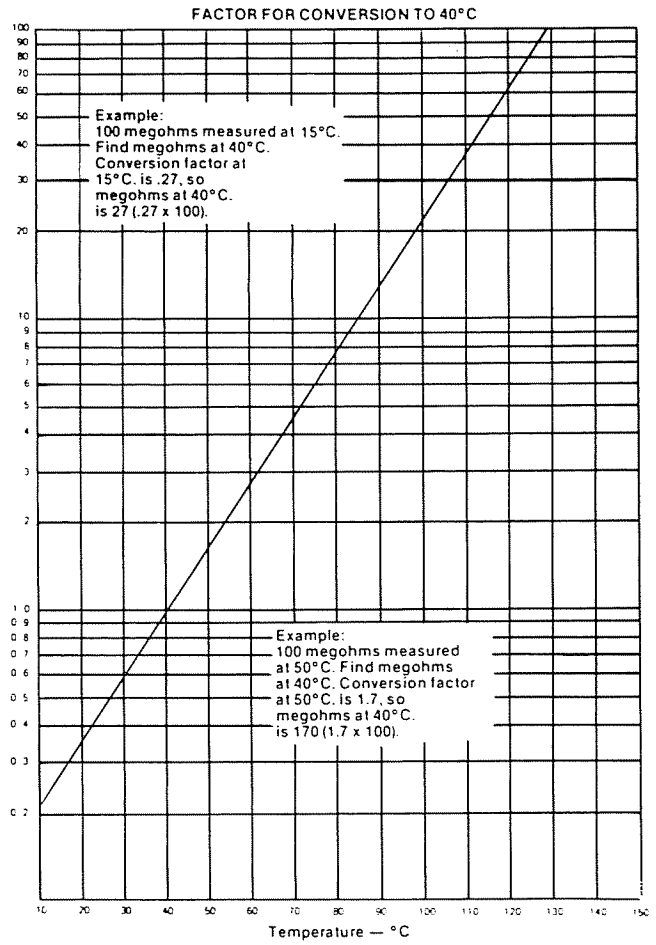

Figure 2-13
Chart for Converting Megger
Readings to 40 Degrees Centigrade

Remove voltage regulator and cover all inlet and discharge openings. Provide an opening at the top of the machine, preferably at the fan end, for moisture to evaporate. Monitor winding temperatures. DO NOT APPLY HEAT TOO RAPIDLY. Winding temperature should be raised gradually at a rate of 10 degrees centigrade per hour up to 93 degrees centigrade (200 degrees fahrenheit). Measure insulation resistance at one hour intervals. Typically the insulation resistance will slowly drop while the temperature is coming up, and then gradually increase and level off.

2.15.6 All electrical connections to the generator must be made in accordance with local regulations and National Electrical code requirements. Check wiring the connection diagram provided with the generator. The main terminals should be properly spaced for the load connections. Refer to Table 2-2 for proper torque values for the connections. Grounding lug has been provided for properly grounding the system to the generator frame. Grounding wire should be the same size as the main leads.

2.15.7 After all wiring is complete, perform the following checks.

2.15.7.1 Double check all interconnections against the connection diagrams furnished.

2.15.7.2 Remove all tools and shop cloths from the vicinity of the operating equipment.

2.15.7.3 Secure all covers and guards in place.

2.15.7.4 Turn rotor slowly with appropriate starting mechanism (bar engine or flywheel) through one revolution to see that the rotor turns freely. DO NOT PRY ON GENERATOR FAN.

2.15.7.5 Check bearings for the proper lubrication.

2.15.7.6 Determine the direction of the engine rotation and verify with the rotation arrows provided on the generator.

2.15.7.7 Voltage, frequency and phase sequence of power line must agree with the data on generator and control nameplates or connection diagrams.

2.16 PROTECTIVE DEVICES

2.16.1 Engine driven sets must be protected with adequate engine governors and protection against excessive overspeed. Refer to National Electrical Code and local electrical codes for minimum electrical requirements for the generator set.

2.16.2 The output to the load of the generator should always be protected with an overload protection device such as a circuit breaker or fuses. Fuses should be sized using the lowest possible current rating above the full load current rating. 115 percent of rated current is commonly recommended. Size fuses or circuit breaker in accordance with National Electrical Code and Local Electrical Codes.

SECTION 3
OPERATION

3.1 IDLING

Permanent equipment damage can be caused by having the generator set in operating mode while idling the engine. If engine adjustments require that the engine be run at idle speed, the generator set regulating system should be made inoperative by one of the methods that follow.

3.1.1 Where generator set is provided with voltage shutdown switch, be sure switch is set to IDLE position while engine is running at idle speed.

3.1.2 Where generator set is equipped with field circuit breakers, be sure the circuit breaker is set to OFF while engine is running at idle speed.

3.1.3 Where generator set includes an automatic/manual control with switch that has OFF position, be sure switch is set to OFF while engine is running at idle speed.

3.1.4 Where generator set does not include switches described above, remove wires from voltage regulator input terminals during under speed operation of the generator set.

3.1.5 Check for vibration. If excessive, loosen one foot mounting bolt slightly and if vibration decreases, add shims until tightening of the bolt reduces the vibration level. Repeat in turn for all mounting bolts. If vibration levels remain above the allowable limits, recheck the alignment steps outlined in Section 2.

3.2 INITIAL START-UP WITH BOTH AUTO MANUAL AND AUTOMATIC VOLTAGE CONTROL

3.1.1 Generator output must be disconnected from load. Main circuit breaker is open.

3.1.2 Turn voltage adjust rheostat to full counterclockwise.

3.1.3 Actuate auto-manual switch to MANUAL position.

3.1.4 Start the primer mover and bring the set to rated speed. Turn manual voltage adjust rheostat to reach rated voltage. Close output circuit breaker and apply load in steps until rated load is reached. Adjust manual adjust rheostat as necessary to obtain desired output voltage.

3.2.5 Stop unit. This is accomplished by opening the circuit breaker to remove the load. Then stopping the prime mover in accordance with prime mover manufacturer's specifications.

3.2.6 Actuate auto voltage rheostat. Then start engine-generator set and bring to rated speed. Adjust voltage to desired value.

3.2.7 Close output circuit breaker. Then check generator voltage and voltage regulation.

3.2.8 Check for vibration levels at no load and rated load. A slight increase in vibration level from no load to full load is normal. As the load is maintained for 2-3 hours the vibration levels will gradually increase and reach a final level.

CAUTION

Do not actuate auto manual switch with full load applied to generator. Whenever possible, stop the generator prior to switching.

3.3 INITIAL START-UP PROCEDURES FOR GENERATORS WITH AUTOMATIC VOLTAGE CONTROL

NOTE: Unit will have automatic voltage regulator but will not have auto-manual switch.

3.3.1 Generator output must be disconnected from load. Main circuit breaker is open.

3.3.2 Turn auto-voltage adjust rheostat to full counterclockwise position.

3.3.3 Start the prime mover and bring the set to rated speed. Turn voltage adjust rheostat to obtain desired voltage.

3.3.4 Close output circuit breaker and apply load in gradual steps until the rated load is reached. Note voltage regulation with changes in load steps.

3.3.5 Check for vibration levels at no load and rated load. A slight increase in vibration level from no load to full load is normal. As the load is maintained for 2-3 hours the vibration levels will gradually increase and reach a final level.

3.4 FIELD FLASHING

The voltage regulator relies on residual voltage to start the generator action which in turn generates the rated voltage. If the generator fails to generate voltage after it has come up to rated speed, it may be necessary to flash the exciter field. Field flashing must be done while the generator is at a standstill as described in the procedure that follows.

3.4.1 Open the output circuit breaker and stop the engine.

CAUTION
Be sure to maintain polarity (+) to (F+) and (-) to (F-).

3.4.2 Connect the negative lead (-) from a common 12 volt storage battery onto exciter field lead F-.

3.4.3 Connect the positive lead (+) from the battery onto exciter field lead F+. Only a few seconds flashing should be necessary.

3.4.4 Remove battery and connect exciter field leads onto voltage regulator terminals F+ and F-. Be sure to maintain correct polarity.

3.4.5 Start generator and check for satisfactory voltage build up.

3.5 PARALLEL OPERATION

3.5.1 For the generator to operate in parallel with a system in operation the phase sequence of the generator must be the same as the system. Phase sequence check can be made by a phase rotation meter or incandescent lamp methods described in electrical machinery handbooks.

3.5.2 The output voltage at the paralleling point must be the same at each instant which requires that two voltages be of the same frequency, same magnitude and same rotation, and must be in coincidence with each other.

Voltmeters indicate whether the voltage magnitude is the same and frequency meters indicate whether the frequencies are the same. Whether the voltages are in phase and exactly at the same frequency is indicated by a synchroscope or by synchronizing lamps.

A synchroscope can be utilized to indicate the difference in phase angle between incoming machine and the system. If not provided with the set, generator can be paralleled by using incandescent lamps connected as shown in Figure 3-1. The voltage rating of series lamps must equal the voltage rating of the generator.

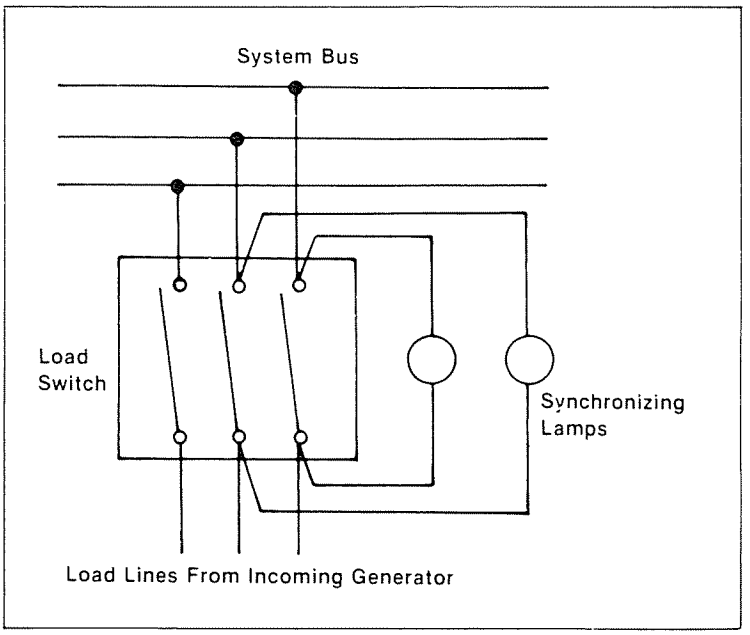

Figure 3-1
Synchronizing Paralleled Generators with Test Lamps

3.5.3 Each prime mover in the system must have the same speed regulating characteristics, and the governors must be adjusted to give the same speed regulation by applying load that is proportional to full load rating of the generator.

3.5.4 Voltage regulator must include paralleling circuitry.

3.5.5 Paralleling current transformers must give the same secondary current.

3.5.6 Current transformer secondary winding provides reactive KVA droop signal to the voltage regulator. Accidental reversal of this electrical wiring will cause the voltage to rise rather than droop. If this occurs during paralleling, stop the unit and reverse the wires at the voltage regulator terminals.

3.5.7 If set is provided with unit/parallel switch, set switch to PARALLEL position on the unit being synchronized.

3.5.8 Synchronize the generator by adjusting speed (frequency) slightly higher than the system. Observe the synchroscope or the lamps. The lamps should fluctuate

from bright to dark at the rate of one cycle every 2 to 3 seconds. When the generator is in phase the lights will be dark, close the circuit breaker. Immediately after closing the breaker measure the line current, Kw and kVAR of the generator. The readings should be within the rating of the unit.

3.5.8.1 A high ammeter reading accompanied by a large Kw reading indicates faulty governor control.

3.5.8.2 A high ammeter reading accompanied by a large kVAR unbalance indicates problems with voltage regulator. Adjustments of the cross current or voltage droop rheostat should improve the phasing of kVAR.

3.5.9 To shut down the generator operating in parallel, gradually reduce the kW load by turning the governor switch to reduced speed. When kW load and line current approach zero, open the generator circuit breaker. Close unit/parallel switch (if generator is so equipped). Operate the generator unloaded for several minutes to dissipate the heat in the winding. Refer to prime mover manual for shut down and cool down procedures.

3.6 CONTINUOUS OPERATION

3.6.1 The generator should be operated within the nameplate values of kW, power factor and voltage. If generator is operate below the rated power factor and voltage, the kVA rating should be decreased to prevent overheating of the field and stator windings.

3.6.2 When generator is carrying unbalanced loads (phase currents varying more than 10 percent of rated value) rotor overheating may result. The rotor heating is caused by negative sequence currents flowing in the field pole face. For a generator guide to the allowable phase unbalance see Figure 3-2, Guide to Allowable Unbalance (which is based on a 10 percent equivalent negative sequence current).

The guide is used in the following manner. Find the point where the vertical line (determined by the maximum current in any of the phases, expressed in percent of rated current) crosses the horizontal line (determined by the minimum current in any of the phases, expressed in percent of rated current). The point where these two lines intersect should be within the permissible "allowable unbalance" region for safe operation of the generator.

3.6.3 Loss of field excitation can result in unit operating out of synchronism with the system when operating is parallel. This will cause damage to rotating rectifiers and severe mechanical stresses on the shaft and other parts. Protective devices should open the generator circuit breaker.

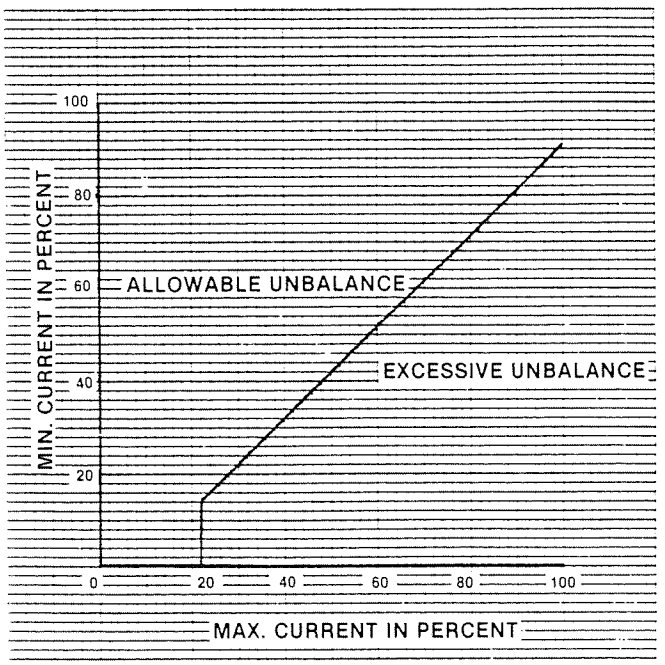

Figure 3-2
Guide to Allowable Phase Unbalance

SECTION 4
MAINTENANCE

4.1 PREVENTIVE MAINTENANCE

4.1.1 Preventive maintenance is the practice of inspecting the generator set, cleaning the generator set, and eliminating minor disorders before they become serious. A routine regular preventive maintenance program practiced conscientiously will ensure peak performance, lengthen the life of the generator, and eliminate or at least greatly reduce breakdown time.

4.1.2 The preventive maintenance schedule described in Table 4-1 is enclosed as a guide for establishing a preventive maintenance program for generators operating under standard conditions. The specific operating conditions should be analyzed by the user of the equipment and a preventive maintenance program established accordingly. When preventive maintenance inspection determines cleaning is necessary, clean the generator and controls as described in paragraph 4.2.1.

4.2 CLEANING

When inspection determines cleaning is necessary, clean the generator and controls as follows.

4.2.1 Wipe loose dirt from exterior painted surfaces of generator, and when incorporated, the generator control panel assembly (controller) with a clean lint free cloth. Remove stubborn accumulations of dirt with an approved detergent or solvent. Clean all ventilating ports with a vacuum cleaner or filtered compressed air at a pressure of from 25 to 40 psi.

WARNING
OBSERVE PRECAUTIONS SPECIFIED BY THE MANUFACTURER OF THE SOLVENT BEING USED.

4.2.2 Clean inside of generator with a vacuum cleaner or use dry filtered compressed air at a pressure of from 25 to 40 psi. Remove stubborn accumulations of dirt and grease from windings with naphtha.

WARNING
Exercise extreme care when using naphtha. Use only in well ventilated areas, away from flame and sparks.

4.2.3 Clean electrical contacts such as relay contacts, switch contacts, and terminals with an approved contact cleaner. **DO NOT FILE CONTACTS.**

4.3 WINDINGS - PROTECTION

Generators operating intermittently in very damp locations should be protected with space heaters. Generators being placed in operation after being subjected to very low temperatures should be slowly warmed to prevent excessive condensation. Winding resistance should be checked before placing the generator in operation if the unit was subjected to an extremely damp environment.

4.4 INSULATION RESISTANCE TEST

A hand cranked megger of not over 500 volts is a convenient and safe method of testing insulation resistance. The following formula is an accepted standard for measuring the insulation resistance of stator windings.

Winding insulation resistance measured at 500 VDC after one minute should not be less than:

$$\text{Resistance in megohms} = \frac{\text{Rated Voltage of Machine} + 1000}{1000}$$

The above formula is satisfactory for most checks. For more information see "Recommended Practice for Insulation Resistance Testing AC Rotating Machinery," AIEE Standard No. 43. **Disconnect load lines and all controls from generator stator leads before testing generator windings.** See Section 2.15.5 for drying methods.

TABLE 4-1

PREVENTIVE MAINTENANCE CHART

1. Lubrication: Lubricate prime mover, gear speed increasers and couplings in accordance with the instructions supplied by the manufacturer of these products. Lubricate Kato generators which have ball or spherical roller bearings as described in paragraph 4.5.1 through 4.5.2.
2. Inspect lead wires and control device wiring for cracked insulation and loose terminals.
3. Clean outside of the generator assembly and ventilation screens. When dust or moisture is excessive, clean and/or dry the inside of the generator assembly.
4. With unit running, observe any unusual noise or vibration. Refer to troubleshooting chart for possible causes of noise and vibration.

4.5 BEARING LUBRICATION

4.5.1 Shielded or Sealed Ball Bearings

Generators under 75 kW have fully shielded or sealed ball bearings. Shielded or sealed ball bearings are factory packed with lubricants and generally can be run several years without requiring replenishment of grease. Should the user decide repacking of the grease is necessary, disassemble machine, clean bearings and repack approximately 1/2 full using a high quality ball bearing grease. Repacking is recommended whenever major repair or overhaul of the generator or its prime mover is done. Grease should be capable of lubricating satisfactorily over a temperature range of: lowest ambient temperature in which generator is operating to plus 250 degrees fahrenheit.

4.5.2 Regreasable Ball or Roller Bearings

Generators larger than 75 kW have regreasable ball bearings and occasionally when design deems it necessary, roller bearings. In applications where regreasable bearings are used, grease fill fittings and grease relief valve will be incorporated in the bearing housing. Lubricate bearings in accordance with the lubricating instructions attached to the generator and the bearing lubrication sheet supplied as supplementary information with this instruction manual.

4.5.3 Oil Lubricated Sleeve Bearing

These bearings should be lubricated in accordance with instructions supplied as supplementary information with this manual.

4.6 TESTING BRUSHLESS EXCITER ROTATING RECTIFIERS WITH AN OHMMETER

If a failure of a rectifier is suspected remove the exciter cover and test rectifiers with an ohmmeter as follows.

4.6.1 Remove nut and washer holding rectifier in heat sink and remove diode lead wire, then lift rectifier from heat sink. Refer to Figure 4-3 (4-4 when unit incorporates dual exciter).

4.6.2 Refer to Figure 4-1, then connect ohmmeter leads across rectifier in one direction. Note meter reading. Reverse leads and note meter reading. The meter should indicate a low resistance when leads are across rectifier in one direction and a high resistance when leads are across rectifier in the other direction.

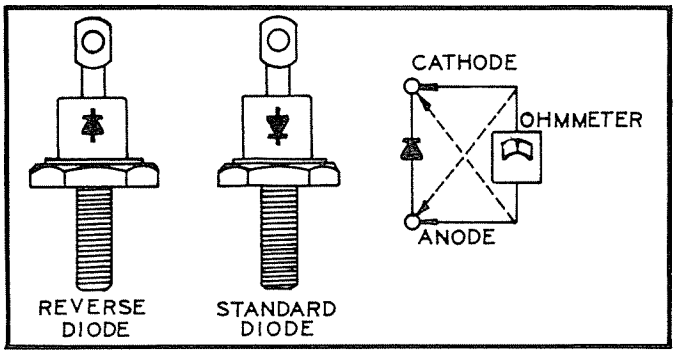

Figure 4-1
Testing Rotating Rectifiers with an Ohmmeter

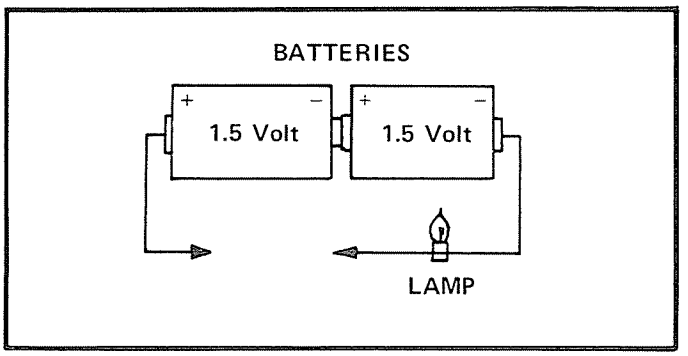

Figure 4-2
Test Lamp

4.6.3 If the meter indicates a low resistance in both directions the rectifier is shorted. A high resistance in both directions indicates an open rectifier.

4.6.4 Replace defective rectifiers with rectifiers of the same operating characteristics as rectifiers installed in the generator at the factory. Order rectifiers by part number including the model and type of the exciter as well as the generator serial number.

4.7 TESTING BRUSHLESS EXCITER ROTATING RECTIFIERS WITH A TEST LAMP

If an ohmmeter is not available, field rectifiers may be tested with a test lamp consisting of standard flashlight batteries and a flashlight bulb as shown in Figure 4-2. Test as follows.

4.7.1 Remove rectifier as described in paragraph 4.6.1.

4.7.2 Connect leads of tester across rectifier in one direction; then reverse leads. The light should light when the leads are across the rectifier in one direction and should not light when placed across rectifier in the other direction.

4.7.3 If the light lights in both directions the rectifier is shorted. If the light does not light in either direction, the rectifier is open.

4.8 TESTING SURGE PROTECTOR WITH TEST LAMP

Refer to Figure 4-2 for test setup. Disconnect one lead and check with lamp tester. The lamp should not light when the test leads are placed across the surge protector in either direction. If the lamp lights, it indicates a shorted surge protector. Replace defective surge protector with one of the same operating characteris-

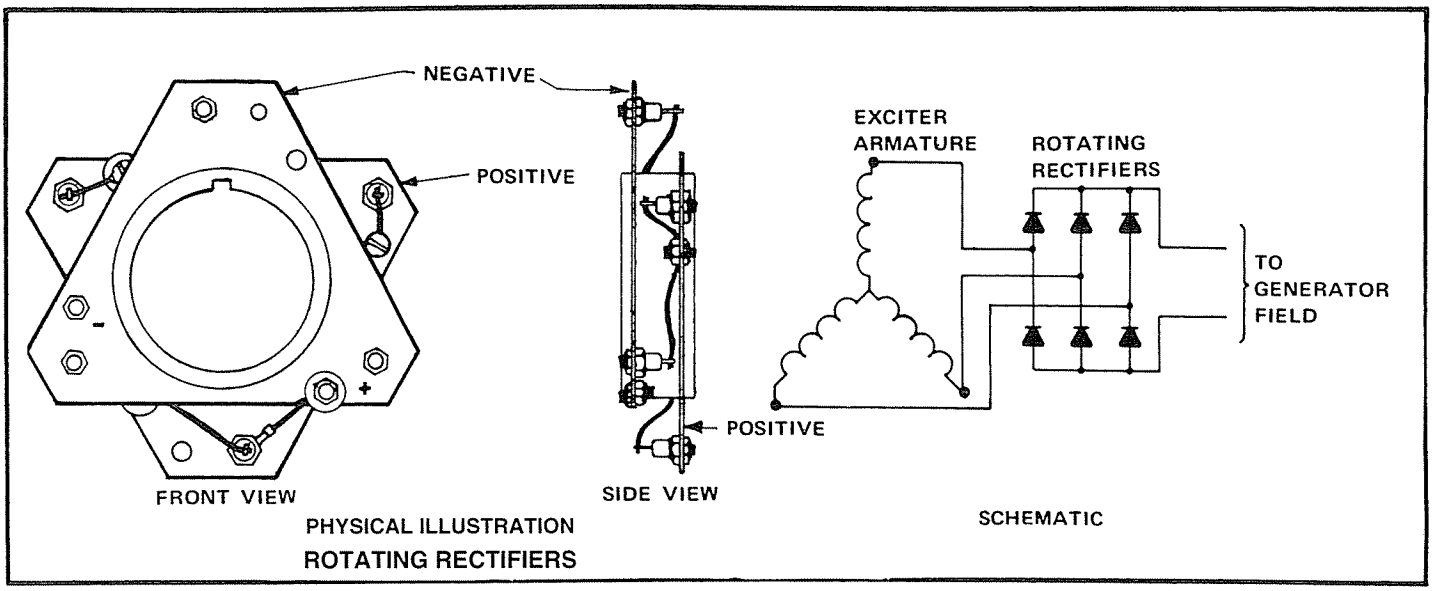

Figure 4-3
Full Wave Rotating Rectifier and Exciter Armature Assembly

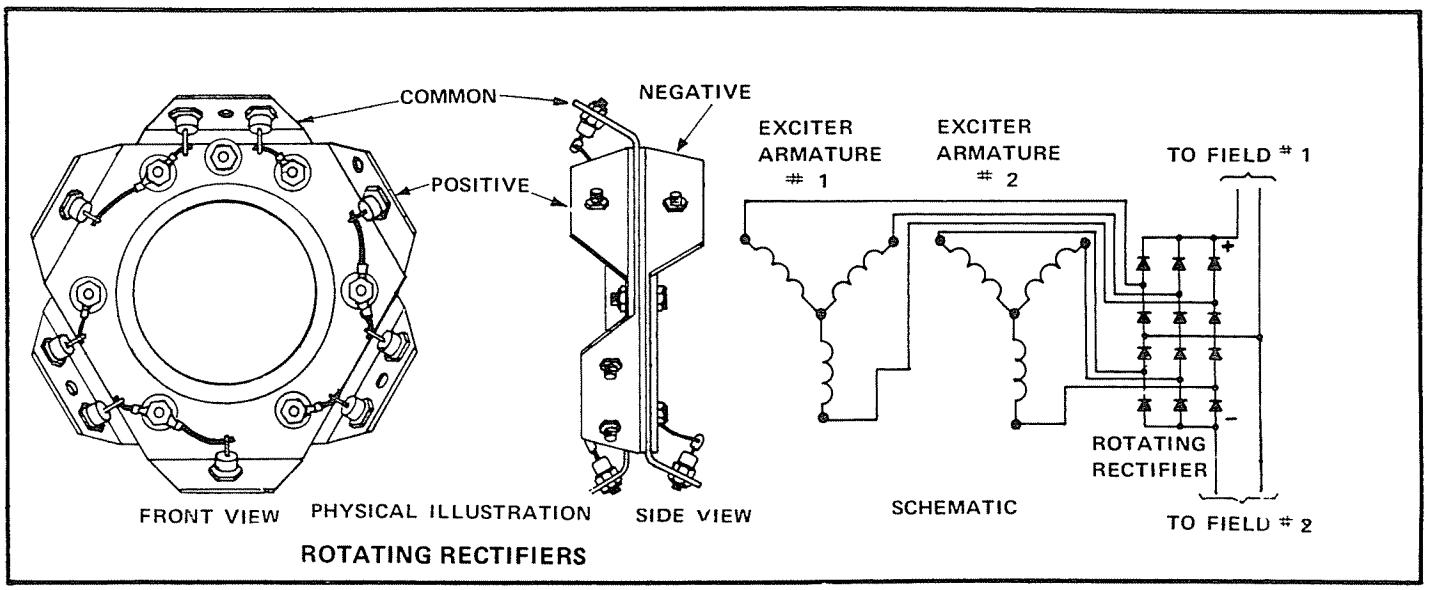

Figure 4-4
Dual Exciter Rotating Rectifier and Exciter Armature Assembly

tics as the surge protector installed in the generator at the factory. Order by part number and include the serial number of the generator. Following replacement of the surge protector, make certain field lead tie-down lacing is securely wound on shaft and tied.

4.9 RESTORING RESIDUAL MAGNETISM

The direct current necessary to magnetize the alternator field is obtained from the exciter. Initially, upon starting the generator, current flow and voltage is induced into the exciter armature by the magnetic lines of force set up by the residual magnetism of the exciter field poles. Residual magnetism of the exciter field poles may be lost or weakened by a momentary reversal of the field connection, a strong neutralizing magnetic field from any source, or if the generator is not operated for a long period of time. To restore the small amount of residual magnetism necessary to begin the voltage build up, connect a battery of from 6 to 32 volts to the exciter field coil circuit. Normally a battery of 6 to 12 voltage is large enough. When the field windings have a high resistance (75-100 ohms) a larger battery voltage may be required. Connect the battery and flash field as follows:

4.9.1 Disconnect exciter field coil wire F2 at terminal F2.

4.9.2 Connect battery positive lead to field coil lead F2.

4.9.3 Flash field by touching battery negative lead to field coil circuit terminal F1.

4.9.4 Disconnect battery leads.

4.9.5 Reconnect field coil lead F2 to terminal F2 and F1 to terminal F1.

4.9.6 Start unit and observe generator build up. Reflash field (paragraphs 4.9.1 through 4.9.5 above) if generator output voltage does not build up.

NOTE

If the polarity of the exciter is reversed by flashing the field, it may be corrected by interchanging the battery leads.

SECTION 5
TROUBLESHOOTING

5.1 Troubleshooting is the process of recognizing malfunctions of the system, intelligently analyzing the malfunction, and making the necessary corrections to place the unit back into proper operation.

5.2 Between regular preventive maintenance inspections, be alert for any signs of generator set trouble. Common symptoms as well as the probable cause and possible remedy are listed in Table 5-1. Correct any minor trouble immediately. **Minor defects left uncorrected can cause serious damage which can result in costly repairs and down time.**

TABLE 5-1
TROUBLESHOOTING CHART

SYMPTOM	POSSIBLE CAUSES	REMEDY
No Voltage	Open circuit breaker or fuses (if voltage is sampled on load side of fuses or circuit breaker).	Check. Reset circuit breaker or replace fuses if open.
	Overvoltage, undervoltage, or overload devices tripped (when protective devices incorporated in circuit).	Check for cause of abnormal condition. Correct any deficiencies. Reset devices. Check Generator Nameplate for nominal operating values.
	Open circuit in exciter field.	Check out continuity of shunt field and leads to voltage control. (Use ohmmeter or wheatstone bridge.) If open in field coils, remove exciter field assembly and return assembly to factory for repair.
	Loss of residual magnetism in exciter field poles or a model voltage regulator is used which requires field flashing to bring generator voltage to level where regulator will operate.	Adjust manual adjust potentiometer to full resistance. Flash field by making a flash connection of DC across terminals F1 to F2. See "Restoring Residual Magnetism." When voltage regulator is such that flashing is required install automatic field flashing system.
	Open circuit in stator windings.	Check for continuity in windings. Return to factory for repair if open.
	Open circuited manual field rectifiers.	Check rectifiers, replace faulty diodes or rectifier assembly.
	Open circuit in manual voltage adjust circuit.	Check potentiometer for continuity. Replace if open circuit.
	Malfunction of automatic voltage regulator.	See troubleshooting of voltage regulator. Correct deficiencies.
	Short circuited generator output leads.	Clear lead to restore voltage build up.

TABLE 5-1 (CONTINUED)

SYMPTOM	POSSIBLE CAUSES	REMEDY
No Voltage (cont.)	Open in rotating rectifiers.	Check rotating rectifiers and replace if open.
	Open in alternator field.	Check for continuity and return rotor to factory for repair if field coils are open.
	Shorted surge protector.	Check for shorts and replace.
	Shorted rotating rectifiers.	Check for shorts. Replace if shorted or open.
	Shorted exciter armature.	Check for short. Replace if shorted.
	Shorted leads between exciter armature and generator field.	Test and repair.
Low Voltage	Defective voltage regulator (when used).	Check regulator, adjust or repair or replace if defective.
	Automatic field flashing system required.	Contact Kato Engineering. Describe system and model of voltage regulator used.
	Defective rectifiers in stationary rectifier assembly (when used).	Check rectifier assembly. Replace defective rectifier.
	Improper adjustment of voltage adjust rheostat.	Adjust rheostat.
	Excessive load.	Reduce load. With 3 wire, single phase and 4 wire, three phase generators, the load on each leg should be as evenly balanced as possible and should not exceed the rated current on any leg.
	Line loss.	Increase size of line wire.
	High resistance connections. Connections will be warm or hot.	Make better connections.
	Shorted field.	Test field coils for possible short by checking resistance with an ohmmeter or resistance bridge. Return rotor assembly to factory for repair if alternator field coils are shorted.
	Low power factor.	Reduce inductive (motor) load. Some AC motors draw approximately the same current regardless of load. Do not use motors of larger horsepower rating than is necessary to carry the mechanical load.

TABLE 5-1 (CONTINUED)

SYMPTOM	POSSIBLE CAUSES	REMEDY
Low Voltage (cont.)	Weak field due to operating in warm temperature.	Improve the ventilation of generator. Field current can be increased providing the generator temperature rating stamped on the nameplate is not exceeded.
	Improper voltage and/or frequency to drive motor causing low speed.	Check input voltage. Correct deficiencies. Check motor data plate for nominal operating values.
	Excessive load.	Reduce load to rated value.
	Defective bearing.	Replace bearing.
	Low speed due to improper belt adjustment on belt drive motor-generator sets.	Align and adjust belt. Replace if worn excessively. Check for proper sheave size.
	Improper speed of engine driven generator set due to defective governor, ignition system, or carburetor.	Check and correct deficiencies.
Fluctuating Voltage	Voltage regulator not operating properly (if used).	Check regulator. Repair or replace if defective.
	Prime mover speed fluctuating.	Check frequency and voltage of incoming power when generator set is motor driven. Engine governor on engine driven generator sets.
	Loose internal or load connections.	Make better connections.
	Generator overloaded.	Reduce load to rated value.
	DC excitation voltage fluctuating.	Trace DC excitation circuit. Correct any defects.
High Voltage	Overspeed.	Correct speed of prime mover.
	Improper adjustment of voltage adjust rheostat or voltage regulator.	Adjust rheostat and/or voltage regulator.
Overheating	Clogged ventilating screens and air passages.	Clean all screens and air passages.
	Dry or defective bearings.	Replace defective bearings.
	Coupling misaligned or on belt driven generators, belt too tight.	Align generator set or adjust belt.

TABLE 5-1 (CONTINUED)

SYMPTOM	POSSIBLE CAUSES	REMEDY
Overheating (cont.)	Generator field coils shorted or grounded.	Test field coils for shorts. Replace shorted rotor or return to factory for repair.
Vibration	Defective or dry bearings.	Replace defective bearings.
	Misalignment of generator and prime mover.	Align generator set.
	Generator not properly mounted.	Check mounting. Correct defective mounting.
	Transfer of vibration to generator from another source.	Isolate generator set from source of vibration by installing vibration dampeners between the generator set base and foundation.

SECTION 6
ASSEMBLY AND DISASSEMBLY

6.1 BEARING REMOVAL

Remove the endbell to expose bearings. Use a puller to remove the bearing from the shaft end with a cap. If the bearing is going to be used again, make certain puller applies pressure only against the bearing inner ring (see Figure 6-1).

6.2 BEARING INSTALLATION

Heat the bearing to a temperature of from 220 degrees fahrenheit to 250 degrees fahrenheit in a clean thermostatically controlled oven. Start the heated bearing into the shaft. Then use a fiber or soft metal tube to tap bearing into place. See Figure 6-2. Make certain that pressure is applied only to the bearing inner ring. Press bearing onto shaft until inner ring is against bearing shoulder on the shaft. Assemble the generator after the bearing has cooled.

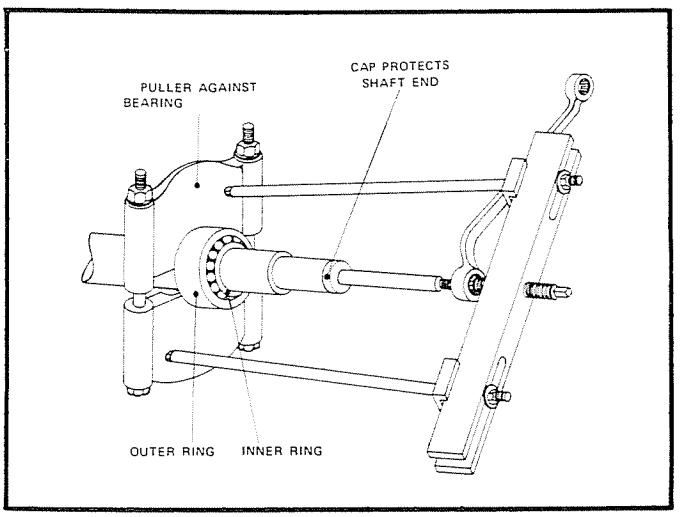

Figure 6-1
Removing Bearing from Generator Shaft

6.3 EXCITER ARMATURE AND ROTATING RECTIFIER ASSEMBLY REMOVAL

Remove exciter armature and rotating rectifier bridge assembly as a unit as described in the following general instructions.

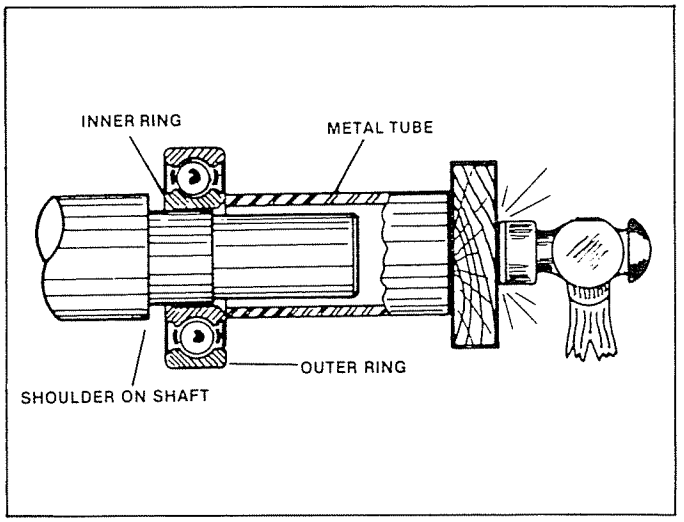

Figure 6-2
Installing Bearing on Generator Shaft

6.3.1 Remove exciter cover. Disconnect alternator field leads from positive (+) and negative (-) terminals located on the heat sinks of the rotating rectifier assembly. Remove exciter armature retaining bolt and washer.

6.3.2 The exciter armature is a "slip fit" on the generator shaft. If the armature cannot be removed by hand, remove with a puller installed as described in paragraph 6.3.3.

CAUTION
DO NOT PULL ON ROTATING RECTIFIER ASSEMBLY OF THE EXCITER ARMATURE WINDINGS.

6.3.3 Install a cap or plug to protect the shaft center. Utilizing the tapped holes in the end of sleeve, bolt to the end of the sleeve spacers and a metal plate. Refer to Figure 6-3 for fixture setup.

6.3.4 Hook a bearing puller to the metal plate and pull exciter armature and rotating rectifier assembly from the shaft.

6.4 EXCITER ARMATURE AND ROTATING RECTIFIER ASSEMBLY INSTALLATION

Install exciter armature and rotating rectifier assembly as a unit as described in the following general instructions.

6.4.1 If the "slip fit" exciter armature and rotating assembly will not easily slide onto the shaft by hand, install with a fixture as shown in Figure 6-4 and described in paragraph 6.4.2.

NOTE

Usually the exciter armature will slide onto the shaft most of the way by hand. The exciter armature can usually be "seated" by tapping lightly on the sleeve with a soft rubber or fiber mallet. MAKE CERTAIN MALLET HITS ONLY THE SLEEVE, NOT RECTIFIER ASSEMBLY OR ARMATURE WINDINGS.

CAUTION

If exciter armature is aligned and locked in place by a removable key, make certain the key is in place in the generator shaft and the keyway in the exciter armature sleeve is aligned with key before starting the exciter armature onto generator shaft.

If unit uses an aligning lug on the exciter armature sleeve and a slot in the generator shaft rather than a removable key to align and lock the exciter armature on the shaft, make certain lug and slot are aligned and engaged.

6.4.2 Refer to Figure 6-4 for fixture setup. Start exciter armature and rectifier bridge on shaft. Thread stud in rotor shaft. Install large diameter washers on stud and start stud nut. Pull exciter armature and rotating rectifier onto shaft by turning stud nut.

6.4.3 Install exciter armature retaining bolt and washer. Connect alternator field leads to positive (+) and negative (-) terminals located on the heat sinks of the rotating rectifier assembly. Install exciter cover.

6.5 REMOVING AND REPLACING EXCITER STATOR ASSEMBLY

Should it be necessary to remove the exciter stator assembly, refer to "Generator Disassembly" procedures and then remove stator as described in the following general instructions.

6.5.1 Remove exciter cover and exciter armature. Refer to paragraphs under 6.4.

6.5.2 Disconnect exciter field leads F1 and F2. Remove any clips securing exciter field leads to the exciter frame, generator frame or the endbell.

6.5.3 Remove generator exciter and generator endbell. Refer to "Generator Disassembly" procedures. Check for shims in endbell bearing well. Make certain the shims, if incorporated, are reinstalled when generator is reassembled.

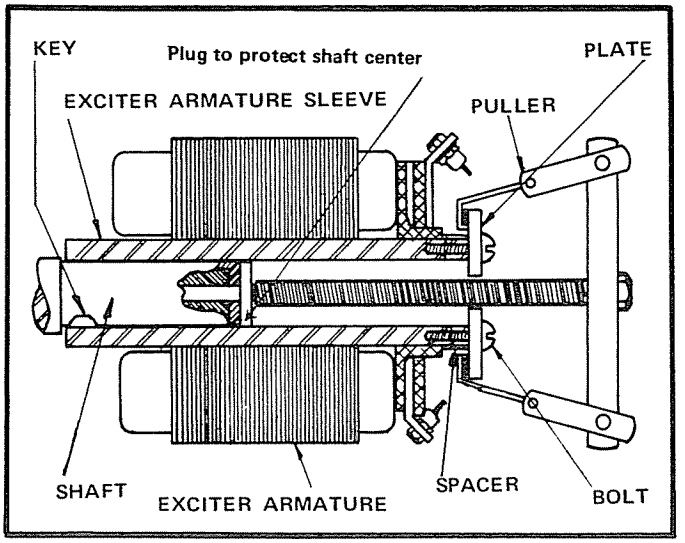

Figure 6-3
Removing Exciter Armature and Rotating Rectifier Assembly

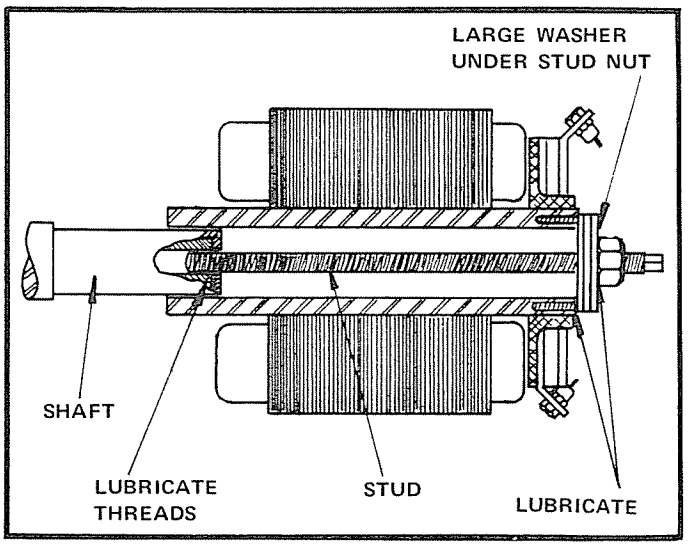

Figure 6-4
Installing Exciter Armature and Rotating Rectifier Assembly

6.5.4 Remove bolts securing exciter frame and stator to the endbell.

6.5.5 Assembly exciter stator by reversing disassembly procedures.

NOTE

Install exciter stator with its field leads toward generator endbell.

6.6 ASSEMBLY AND DISASSEMBLY OF SINGLE BEARING ENGINE DRIVEN GENERATOR

Refer to Figures 6-5a and 6-5b for part identification, then disassemble generator as described in the following general instructions.

6.6.1 Remove terminal box cover and disconnect generator load leads and exciter field leads. Tag leads and terminals to make certain leads are correctly connected when unit is reassembled.

6.6.2 Remove fan screen. Remove bolts securing drive disks (20) to engine flywheel. Remove bolts securing engine flywheel housing to generator adaptor endbell (17).

6.6.3 Remove bolts securing generator base pads (16) to engine-generator base or foundation.

6.6.4 Move generator to location affording sufficient room for disassembly. Attach slings to lifting eye bolts (13) to move generator. See Section 2 "Installation" instructions for handling precautions.

6.6.5 Remove drive disk bolts (18). Remove drive disks (20).

6.6.6 Remove exciter cover (1). Disconnect alternator field leads, remove exciter armature retaining bolt and washer (2). Remove exciter armature and rotating rectifier assembly as a unit. See paragraphs in 6.4.

6.6.7 Remove clips securing exciter field leads to exciter frame, generator frame and generator endbell.

6.6.8 Remove endbell bolts (9). Remove endbell (10). Tap lightly with rubber or fiber mallet to loosen endbell. Check for shims in the endbell bearing housing (well). Make certain shims, when incorporated, are reinstalled when unit is assembled.

6.6.9 If the exciter stator (field) (5) requires repair or replacement, remove bolts (7) and remove exciter frame and stator assembly (5) from endbell (10).

6.6.10 Install pipes over generator shaft on the drive and exciter end of rotor. Attach slings and hoist to pipes and remove rotor assembly (12) from stator and frame (11). Make certain air gap is maintained between the rotor and stator during removal of the rotor.

CAUTION

Make certain pipes are of sufficient strength to support weight or rotor and that pipes do not have rough edges which would damage shaft surface.

6.6.11 If bearings require replacement, remove bearings as described in paragraph 6.1.

6.6.12 Assemble generator by reversing order of disassembly procedures listed above (paragraphs 6.6.11 through 6.6.1). Assemble to engine as described in Section 2.

NOTE

Install bearings as described in paragraph 6.2 and exciter as described in paragraphs under 6.4 and 6.5. Make certain generator field is aligned with generator armature (stator) and the exciter armature is aligned with the exciter field.

6.7 ASSEMBLY AND DISASSEMBLY OF TWO BEARING GENERATOR

Refer to Figures 6-6a and 6-6b for part identification and then disassemble generator as described in the following general instructions.

6.7.1 Remove terminal box cover and disconnect generator load leads and exciter field leads. Tag leads and terminals to make certain leads are correctly connected when unit is reassembled.

6.7.2 Remove coupling or sheaves in accordance with manufacturer's instructions.

6.7.3 Remove bolts securing generator base pads (16) to base or foundation.

6.7.4 Move generator to location affording sufficient room for disassembly. Attach slings to lifting eye bolts (13) to move generator. See Section 2 "Installation" instructions for handling precautions.

6.7.5 Remove exciter cover (1). Disconnect alternator field leads, remove exciter armature retaining bolt and washer (2). Remove exciter armature and rotating rectifier assembly as a unit (see paragraphs under 6.3).

6.7.6 Remove clips securing exciter field leads to exciter frame, generator frame and generator endbell.

6.7.7 Remove endbell bolts (9). Remove endbell (10). Tap lightly with rubber or fiber mallet to loosen

These drawings are intended for purposes of discussion only and may differ slightly from the actual construction of the unit.

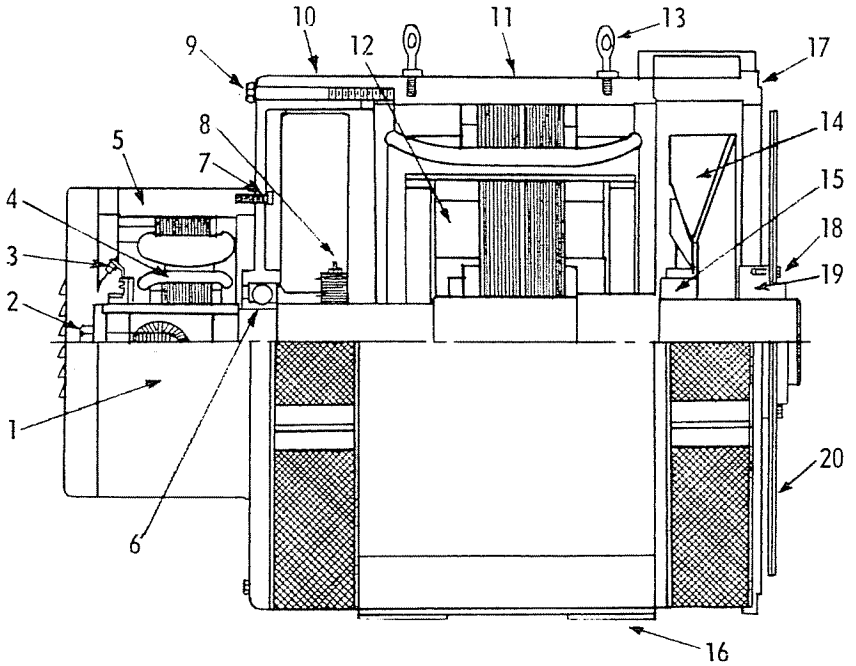

FIGURE 6-5A TYPICAL KATO SINGLE BEARING REVOLVING FIELD BRUSHLESS GENERATOR WITH OUTBOARD EXCITER AND EXCITER FRAME

PART DESCRIPTION FOR FIGURES 6-5A and 6-6A

Key No.	Part Description	Key No.	Part Description
1	Exciter Cover	12	Generator Rotor (Field) Assembly
2	Exciter Armature Retaining Bolt & Washer	13	Lifting Eyebolt
3	Rotating Rectifier Assembly	14	Fan
4	Exciter Armature	15	Fan Hub
5	Exciter Frame & Stator Assembly	16	Generator Mounting Pad
6	Bearing, Exciter End	17	Drive Endbell
7	Exciter Frame & Stator Mounting Bolt	18	Figure 6-5A, Drive Disk Bolt
8	Surge Protector (may be mtd. on rotating rectifier ass'y)	18	Figure 6-6A, Drive Endbell Mounting Bolt
9	Exciter Endbell Mounting Bolt	19	Figure 6-5A, Drive Hub
10	Exciter Endbell	19	Figure 6-6A, Drive End Bearing
11	Generator Frame & Stator Assembly	20	Figure 6-5A, Drive Disks

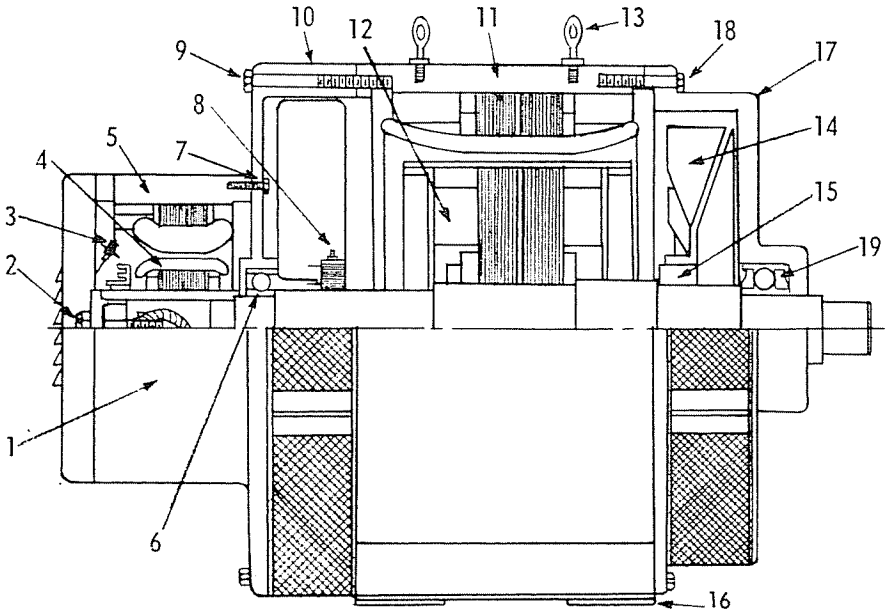

FIGURE 6-6A TYPICAL KATO TWO-BEARING REVOLVING FIELD BRUSHLESS GENERATOR WITH OUTBOARD EXCITER AND EXCITER FRAME

These drawings are intended for purposes of discussion only and may differ slightly from the actual construction of the unit.

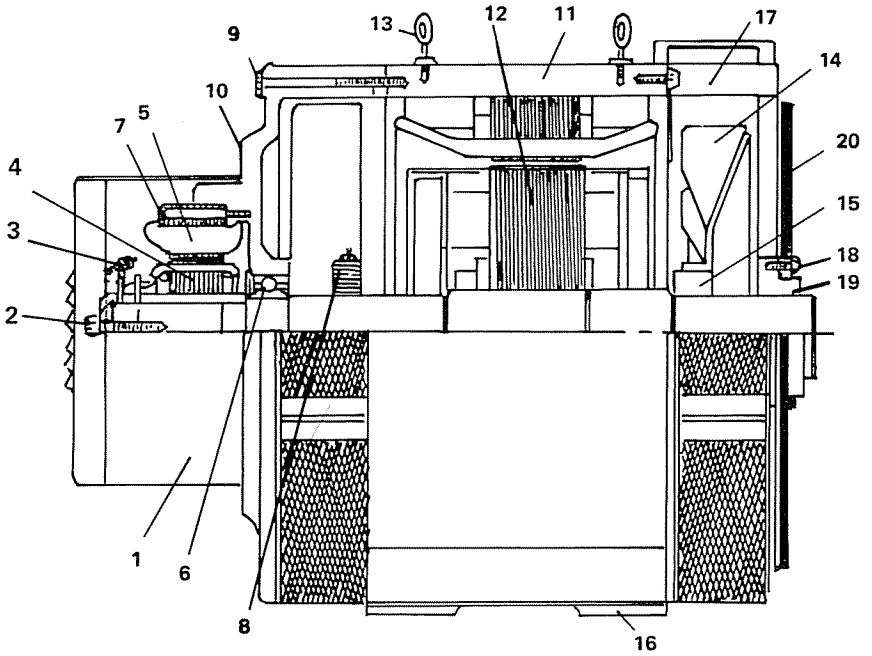

FIGURE 6-5B TYPICAL KATO SINGLE BEARING REVOLVING FIELD BRUSHLESS GENERATOR WITH OUTBOARD EXCITER FIELD MOUNTED ON ENDBELL

PART DESCRIPTION FOR FIGURES 6-5B and 6-6B

Key No.	Part Description	Key No.	Part Description
1	Exciter Cover	12	Generator Rotor (Field) Assembly
2	Exciter Armature Retaining Bolt & Washer	13	Lifting Eyebolt
3	Rotating Rectifier Assembly	14	Fan
4	Exciter Armature	15	Fan Hub
5	Exciter Field	16	Generator Mounting Pad
6	Bearing, Exciter End	17	Drive Endbell
7	Exciter Field Bolt	18	Figure 6-5B, Drive Disk Bolt
8	Surge Protector (may be mtd. on rotating rectifier ass'y)	18	Figure 6-6B, Drive Endbell Mounting Bolt
9	Exciter Endbell Mounting Bolt	19	Figure 6-5B, Drive Hub
10	Exciter Endbell	19	Figure 6-6B, Drive End Bearing
11	Generator Frame & Stator Assembly	20	Figure 6-5B, Drive Disks

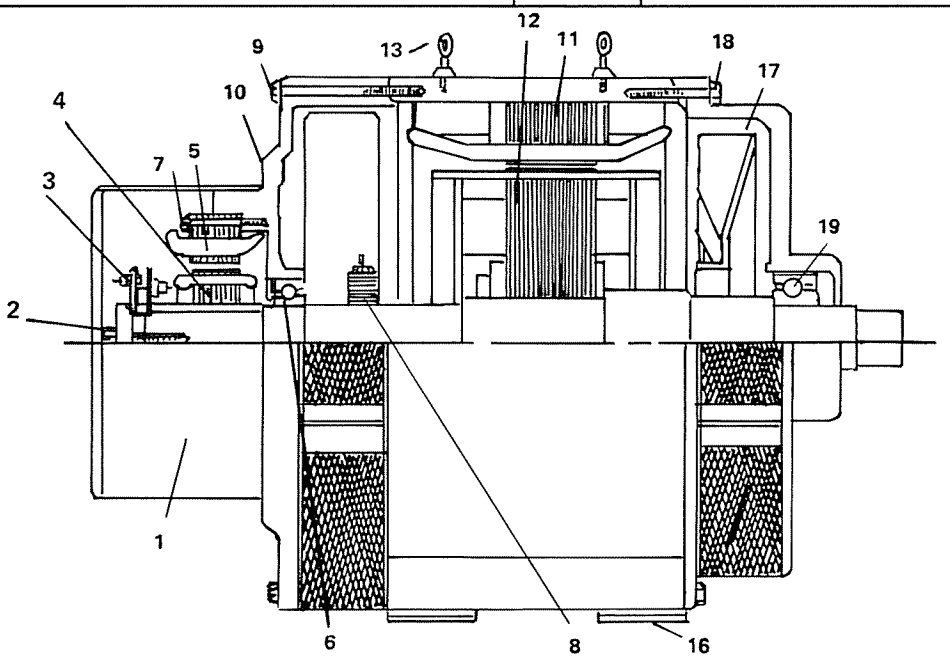

FIGURE 6-6B TYPICAL KATO TWO-BEARING REVOLVING FIELD GENERATOR WITH OUTBOARD EXCITER FIELD MOUNTED ON ENDBELL

endbell. Check for shims in the endbell bearing housing (well). Make certain shims, when incorporated, are reinstalled when unit is assembled.

6.7.8 If the exciter stator (field) (5) requires repair or replacement, remove bolts (7) and remove exciter frame and stator assembly (5) from endbell (10).

6.7.9 Remove endbell bolts (18) and endbell (17). Check for shims in bearing well (see paragraph 6.7.7).

6.7.10 Remove fan (14) from hub (15).

NOTE

Before loosening fan, measure distance from fan to fan baffle and maintain this distance when fan is reinstalled.

6.7.11 Install pipes over generator shaft on the drive and exciter end of rotor. Attach slings and hoist to pipes and remove rotor assembly (12) from stator and frame (11). Make certain air gap is maintained between the rotor and stator during removal of the rotor.

CAUTION

Make certain pipes are of sufficient strength to support weight of rotor and that pipes do not have rough edges which would damage shaft surface.

6.7.12 Assemble generator by reversing order of disassembly procedures listed above (paragraphs 6.7.11 through 6.7.1).

NOTE

Install bearings as described in paragraph 6.2 and exciter as described in paragraphs under 6.4 and 6.5. Make certain generator field (rotor) is aligned with generator armature (stator).

6.8 ASSEMBLY AND DISASSEMBLY OF SYNCHRONOUS BRUSHLESS DUAL GENERATORS FAN MOUNTED AT DRIVE END

Refer to Figure 6-7 for part identification and then disassemble generator as described in paragraphs under 6.7. Assemble generator by reversing disassembly procedures listed in paragraphs under 6.7.

6.9 ASSEMBLY AND DISASSEMBLY OF SYNCHRONOUS BRUSHLESS DUAL GENERATORS WITH CENTER MOUNTED FAN

Refer to Figure 6-8 for part identification, then disassemble generator as listed in the following general instructions.

6.9.1 Disconnect generator and proceed with disassembly and described in 6.7 paragraphs 6.7.1 through 6.7.6.

6.9.2 Remove fan screen. Remove fan blades from fan hub. Mark each blade and the fan hub for direction of rotation. Number the fan blades and the fan hub as each blade segment is removed to ensure proper reinstallation.

NOTE

Fan blades must be reinstalled in the correct direction of rotation. The rotor assembly was factory balanced with fan blades installed. Each blade segment must be reinstalled to the identical position on the hub as when removed. Blades and hub must be clearly marked during disassembly to ensure correct reassembly.

6.9.3 When removal of fan blades and identification marking of blades and hub is complete and satisfactory, proceed with disassembly of the generator as described in 6.7 paragraphs 6.7.7 through 6.7.12.

6.9.4 Reassemble generator by reversing order of steps followed to disassemble the unit. Make certain fan blades are correctly installed.

NOTE

Install bearing as described in paragraph 6.2 and install exciter as described in paragraphs under 6.4 and 6.5. Make certain generator field (rotor) is aligned with generator armature (stator) and the exciter armature is aligned with exciter field.

These drawings are intended for purposes of discussion only and may differ slightly from the actual construction of the unit.

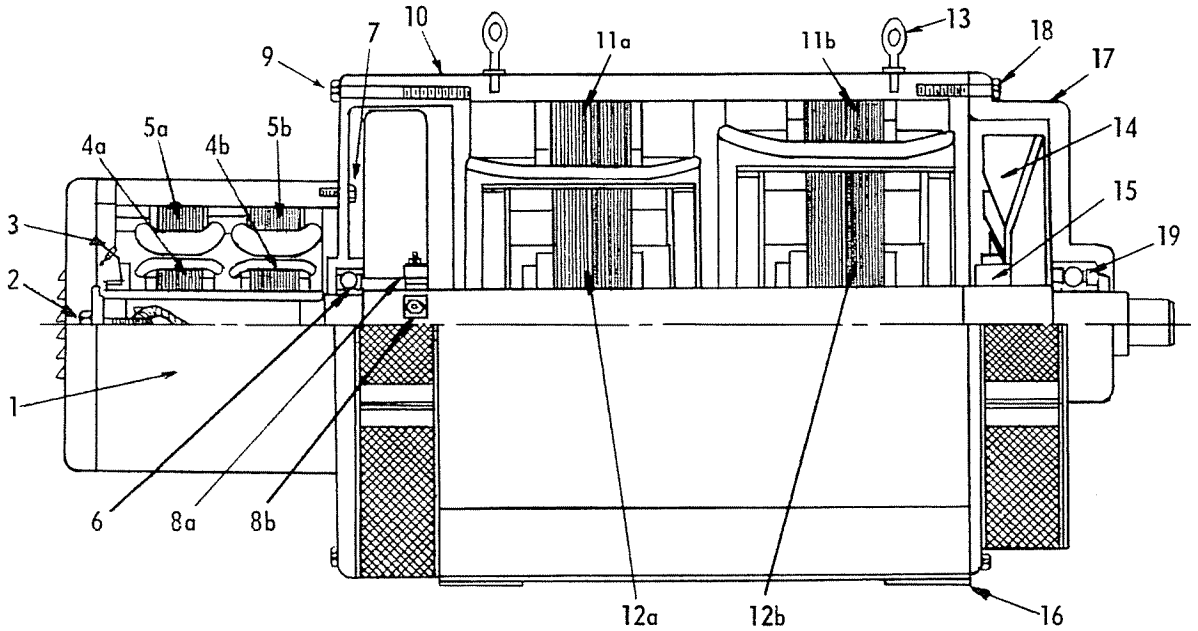

FIGURE 6-7 KATO SYNCHRONOUS BRUSHLESS REVOLVING FIELD DUAL GENERATOR OR MOTOR-GENERATOR WITH FAN MOUNTED AT DRIVE END

PART DESCRIPTION FOR FIGURES 6-7 and 6-8

Key No.	Part Description	Key No.	Part Description
1	Exciter Cover	11a & 11b	Generator Frame & Stator Assembly
2	Exciter Armature Retaining Bolt & Washer	12a & 12b	Generator Rotor Assembly
3	Rotating Rectifier Assembly	13	Lifting Eyebolt
4a & 4b	Exciter Armature Assembly	14	Fan
5a & 5b	Exciter Frame & Stator Assembly	15	Fan Hub
6	Bearing, Exciter End	16	Generator Mounting Pads
7	Exciter Field Mounting Bolt	17	Drive Endbell
8a & 8b	Surge Protectors	18	Drive Endbell Mounting Bolt
9	Endbell Mounting Bolt	19	Bearing, Drive End
10	Exciter Endbell		

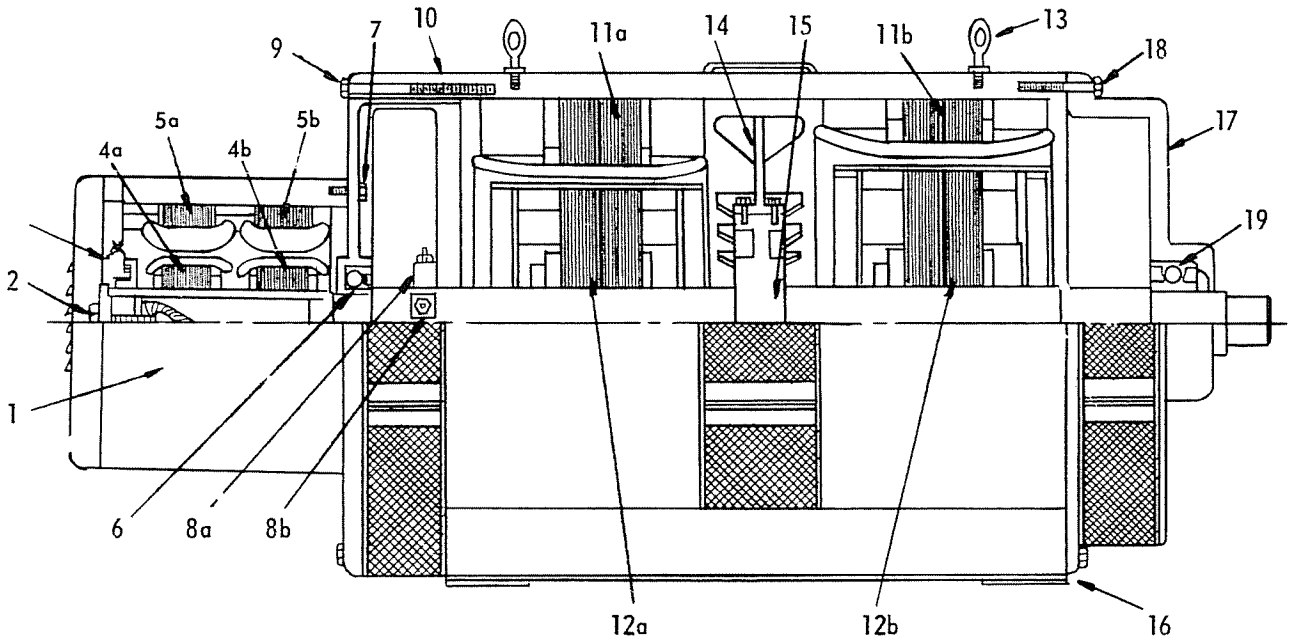

FIGURE 6-8 KATO SYNCHRONOUS BRUSHLESS REVOLVING FIELD DUAL GENERATOR OR MOTOR-GENERATOR WITH CENTER MOUNTED FAN

SECTION 7
RENEWAL PARTS ORDERING INFORMATION

Renewal parts must be of the same physical construction and have the same operating characteristics as parts installed in the generator at the factory. Do not attempt to substitute "similar" parts. Order parts by part name and part number. As additional information always include the generator serial number and the generator and exciter type and model numbers. For fastest service direct parts order to Kato Engineering, Product Service Department, P. O. Box 47, Mankato, Minnesota, 56002.

WARRANTY

Kato Engineering warrants that its products will perform as specified in bonafide quotations or Kato publications, providing such products are properly installed, properly cared for, and properly operated under normal environmental conditions.

Standard products manufactured by Kato Engineering are warranted to be free from defects in workmanship and material for a period of one year in operation of 18 months from date of shipment, and any products which are defective in workmanship or material will be repaired or replaced at the option of Kato Engineering. Final determination as to whether a product is actually defective rests with Kato Engineering. The obligation of Kato Engineering hereunder shall be limited solely to repair and replacement at its factory, products that fall within the foregoing limitations and shall be conditioned upon receipt by Kato Engineering of written notice within the warranty period of any alleged defects of deficiency. No products shall be returned to Kato Engineering without its prior consent. In no case will Kato Engineering accept shipping charges incurred either through return of defective items to its factory or return of repaired or replacement items to the user. Kato Engineering cannot assume responsibility or accept invoices for unauthorized repairs to its components even though defective. In the case of components, parts or units purchased by Kato Engineering the obligation of Kato Engineering shall not exceed the settlement that it is able to obtain from the supplier thereof.

The life of the products of Kato Engineering depends to a large extent upon the type of usage. Kato Engineering makes no warranty as to period of service or as to fitness of its products for specific applications by the buyer. In no event will Kato Engineering be liable for consequential or incidental damages or any expense incurred by the Buyer due to use or sale of products sold by Kato Engineering.

The foregoing warranty is exclusive and in lieu of all other warranties expressed or implied, including but not limited to any warranty of merchantability or of fitness for a particular purpose.

This warranty does not apply to experimental or developmental products.

DEPENDABLE ELECTRICAL POWER EQUIPMENT BUILT TO PRECISE SPECIFICATIONS

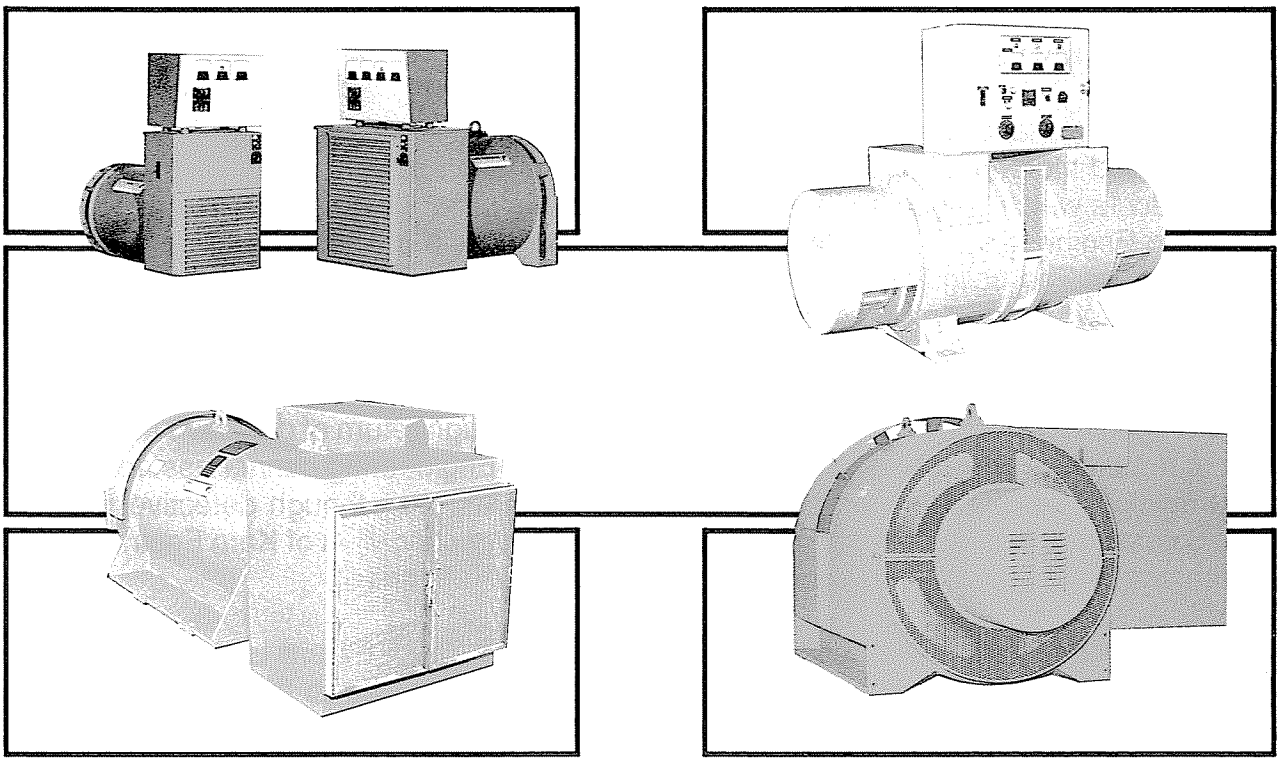

Assured Power Performance for Any Energy System

Prime Power

Emergency / Standby Power

Co-Generation

Load Isolation and Frequency Conversion

For quality products from 5 - 13,000 kW
contact Kato Engineering.

Kato Engineering

P.O. Box 47
Mankato, MN 56002
(507) 625-4011

RELIANCE ELECTRIC

Printed in U.S.A.

Form #350-01001-00

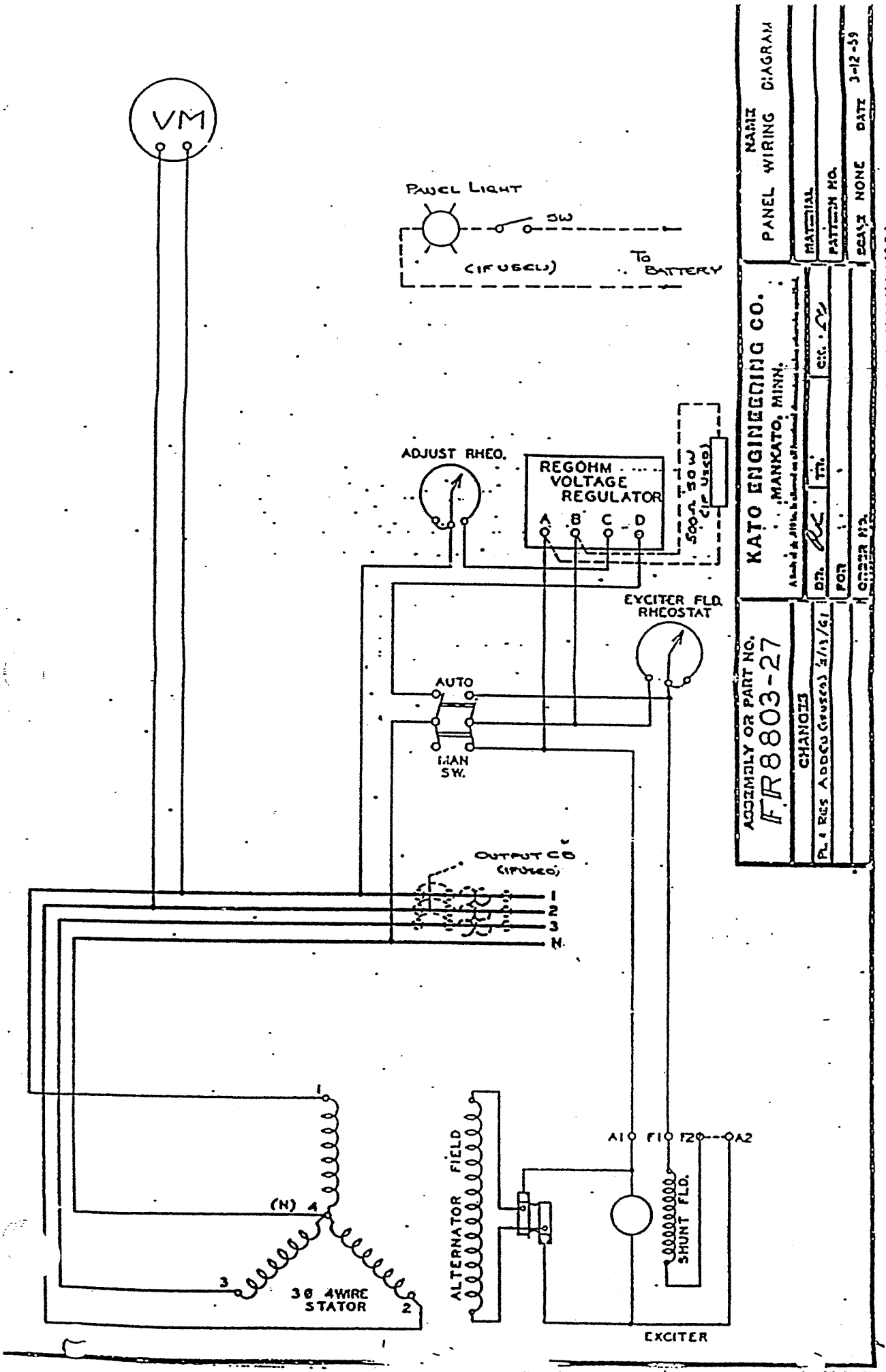
VM
PANEL LIGHT
SW
(IF USED)
TO BATTERY
ADJUST RHEO.
REGOHM VOLTAGE REGULATOR
A B C D
500Ω 50W (IF USED)
EXCITER FLD. RHEOSTAT
AUTO
MAN SW.
OUTPUT CB (IF USED)
1
2
3
N
(N) 4
3
2
3Ø 4WIRE STATOR
ALTERNATOR FIELD
A1 F1 F2 A2
SHUNT FLD.
EXCITER
KATO ENGINEERING CO.
MANKATO, MINN.
NAME
PANEL WIRING DIAGRAM
MATERIAL
PATTERN NO.
SCALE NONE
DATE 3-12-59
ASSEMBLY OR PART NO.
FR8803-27
CHANGES
PL. & RES ADDED (IF USED) 3/13/61
DR.
TR.
CK.
FOR
ORDER NO.

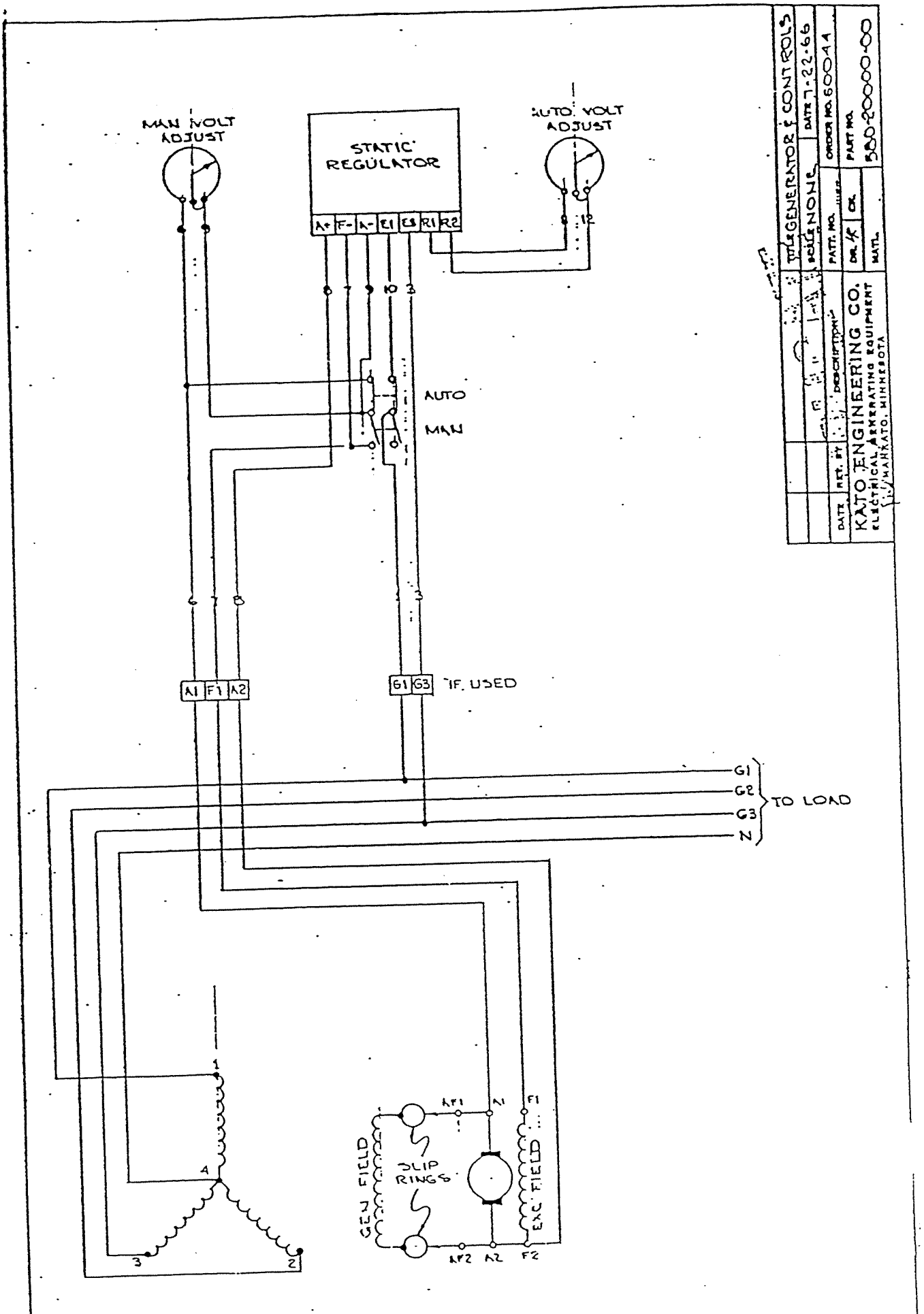

GENERATOR AND EXCITER

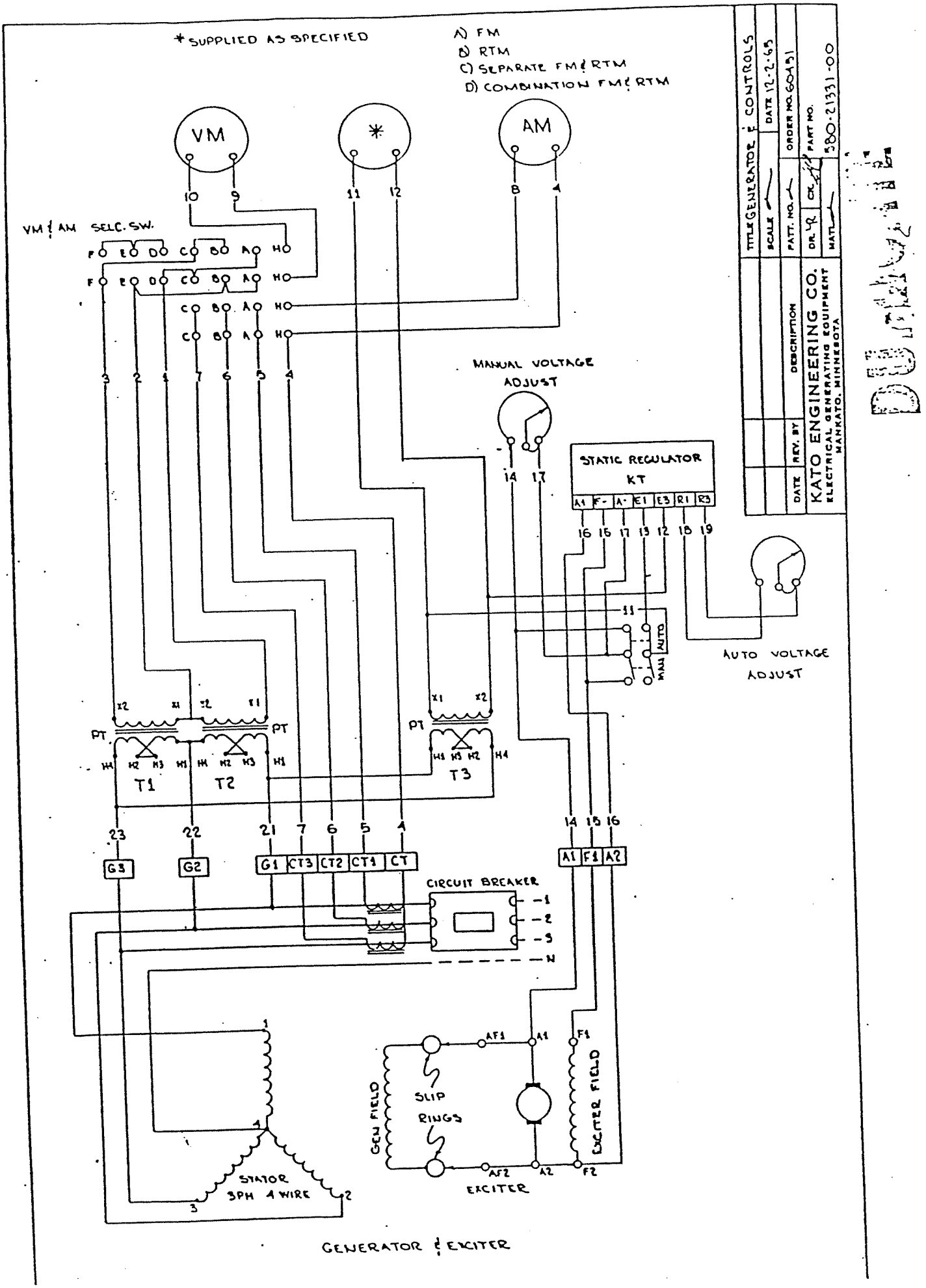
* SUPPLIED AS SPECIFIED
A) FM
B) RTM
C) SEPARATE FM & RTM
D) COMBINATION FM & RTM
VM
*
AM
VM & AM SELC. SW.
MANUAL VOLTAGE ADJUST
STATIC REGULATOR
KT
A1 F- A- E1 E3 R1 R3
AUTO VOLTAGE ADJUST
AUTO
MAN
PT
T1
T2
T3
G3
G2
G1 CT3 CT2 CT1 CT
A1 F1 A2
CIRCUIT BREAKER
STATOR
3PH 4 WIRE
GEN FIELD
SLIP RINGS
EXCITER FIELD
AF1 A1 F1
AF2 A2 F2
EXCITER
GENERATOR & EXCITER
TITLE GENERATOR & CONTROLS
DATE 12-2-65
SCALE
PATT. NO.
ORDER NO. 60491
DR. VR
CK.
PART NO. 580-21331-00
MAT'L
DESCRIPTION
REV. BY
DATE
KATO ENGINEERING CO.
ELECTRICAL GENERATING EQUIPMENT
MANKATO, MINNESOTA

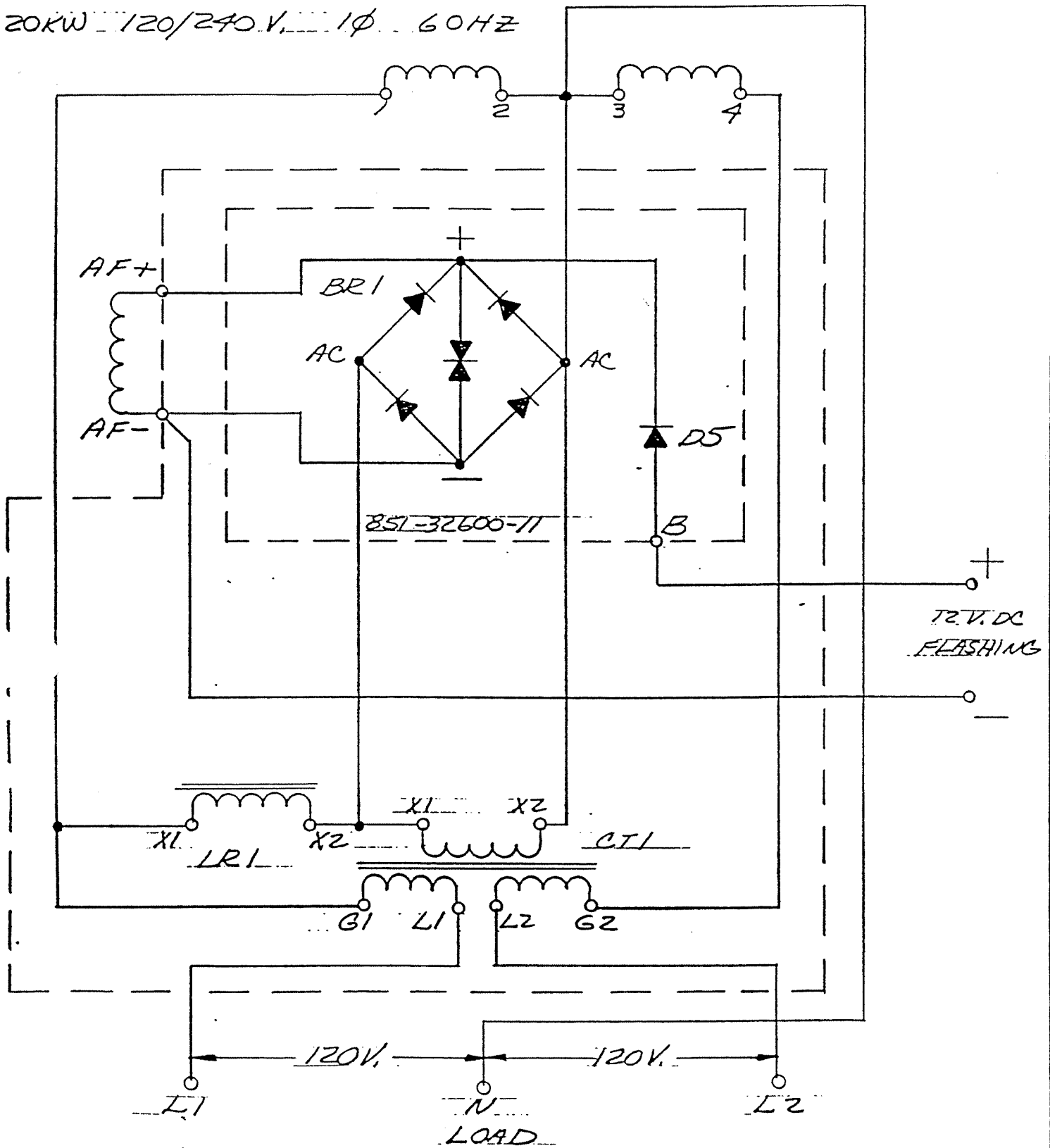

REF.' ECO # 3913

CERTIFIED FOR	KATO ENGINEERING CO.			C
	ELECTRICAL GENERATING EQUIPMENT			B
	MANKATO, MINNESOTA, U.S.A.			A
	PATT. / MATL.	E. C. O.	DATE	REV.
P.O.	ENGR. / CK 4-23-24 DR R.L.	1st S/N USED ON S/N 71144		
KATO S/N	DATE 4-23-24 / SCALE	DRWG. NO.	SH 1 OF 1	
DATE / SIGN	TITLE			REV.

DRAWING NO. 800-96134-03

Publication Number: **350-04001-00A**
Publication Date: **August 1985**

INSTRUCTION MANUAL

SINGLE BEARING KAMAG GENERATOR WITH OUTBOARD EXCITER

SERIAL NUMBER

_____

INCLUDES
PRINCIPLES OF OPERATION
INSTALLATION INSTRUCTIONS
ADJUSTMENT AND OPERATING INSTRUCTIONS
MAINTENANCE AND TROUBLESHOOTING
DRAWINGS AND GENERAL INFORMATION

Rockwell Automation
ISO9001 Kato Engineering

P.O. BOX 8447
MANKATO, MN 56002-8447
(507) 625-4011
FAX (507) 345-2798

Safety Summary

WARNING

This equipment contains high speed (1800 RPM) rotating parts and develops lethal voltage (480 VAC or higher). Stop generator set before removing protective covers for the purpose of making electrical connections, installation, adjustments, inspection, troubleshooting, testing, repair, or parts replacement. Install protective covers before starting the generator set. Failure to observe this precaution can result in serious injury or electrocution.

WARNING

Where meters or test instruments are used for purpose of troubleshooting and testing, it is recommended the test equipment be placed external to the generator and the generator set be stopped while making or removing meter and instrument connections. Be sure protective covers are installed before running unit. Failure to observe this precaution can result in serious injury or electrocution.

WARNING

Do not lift complete generator set by means of lifting eye on generator. Disregarding these instructions may result in serious injury or equipment damage.

WARNING

Do not lift or pry on generator fan. Failure to observe this precaution can result in serious injury and equipment damage.

WARNING

Make certain that sufficient clearance exists between fan and stationary parts and make certain fan and fan hub bolts are torqued. Failure to observe this precaution can result in serious injury and equipment damage.

WARNING

When circuit breakers are not included with the generator, the terminals on the ends of the stator lead wires are not insulated. These terminals must be insulated before generator set is operated. Failure to observe this precaution can result in serious injury and equipment damage.

CAUTION

Do not attempt to lift or transport any single bearing generator without proper rotor support. Failure to observe this precaution can result in extensive equipment damage. Make certain exciter rotor is removed while handling generator.

CAUTION

Do not push on rotating rectifier or exciter winding. Failure to observe this precaution can result in equipment damage.

Publication No.: **350-04001-00A**
Publication Date: **August 1985**
Supersedes: **350-04001-00, August 1981**

Table of Contents

Section 1
General Information, Principles of Operation and Mechanical Construction

GENERAL 1-1
PRINCIPLES OF OPERATION 1-1
MECHANICAL CONSTRUCTION 1-1
Generator Frame and Stator 1-1
Generator Frame Cover 1-1
Generator Rotor Assembly 1-2
- A. Shaft
- B. Generator Field Poles
- C. Air Circulating Fan
- D. Bearings

Exciter Rotor 1-2
- A. Exciter Armature
- B. Rectifier

Exciter Field Assembly 1-3
Endbell 1-3
Adapter 1-3
Terminal Box 1-3

Section 2
Receiving, Inspection, Handling Instructions, and Storage

RECEIVING YOUR KAMAG GENERATOR 2-1
WINDING INSPECTION 2-1
UNPACKING 2-1
STORAGE 2-1

Section 3
Coupling and Aligning Generator and Prime Mover

GENERAL 3-1
PRE-COUPLING MEASUREMENTS 3-1
- A. Engine Crankshaft and Flywheel Deflection
- B. Measuring Generator Drive Plate and Flywheel Driving Ring Pilot Bore
- C. Checking Exciter Alignment
- D. Checking Bearing Endclearance

COUPLING AND MOUNTING GENERATOR ONTO ENGINE AND BASE 3-2
MEASURING GENERATOR ROTOR ECCENTRICITY 3-4
MEASURING ROTOR ANGULAR ALIGNMENT 3-5

Section 4
Electrical Connections

GENERAL 4-1
- A. Three-Phase Wye Connected Generator
- B. Three-Phase Delta Connected Generator
- C. Single Phase Three Wire
- D. Single Phase Two Wire
- E. Generator Frame Ground
- F. Exciter Field Lead Wires
- G. Voltage Regulator

Table of Contents (Cont.)

H. Voltage Regulator Fuse
I. Voltage Regulator Systems Equipped with Paralleling Components
1. Reactive Voltage Droop Compensation
2. Reactive Different Compensation
J. Voltage Shutdown Switch
K. Field Circuit Breaker
L. Automatic/Manual Voltage Control
M. Space Heaters

Section 5
Operation

PRE-START INSPECTION 5-1
IDLING 5-1
FIELD FLASHING 5-1
VOLTAGE ADJUSTMENTS 5-1
VOLTAGE RANGE ADJUST 5-2
STABILITY ADJUSTMENT 5-2
STARTING UP THE GENERATOR FOR SINGLE UNIT OPERATION 5-2
PARALLEL OPERATION 5-2
A. Prime Mover Governor
B. Voltage Regulator Paralleling Provisions
C. Synchroscope or Synchronizing Lights
D. Metering
Automatic/Manual Control During Parallel Operation 5-3
Phase Rotation 5-3
Pre-Paralleling Adjustments and Checks 5-3
Paralleling 5-3
Shuttling Down One or More Generators Operating Parallel 5-4

Section 6
Preventive Maintenance

INSPECTION 6-1
CLEANING 6-1

Section 7
Troubleshooting

GENERAL 7-1
TROUBLESHOOTING PROCEDURE 7-1
A. No Voltage
B. Low Voltage
C. High Voltage
D. Voltage Fluctuating

Section 8
Generator Tests

MEASURING EXCITER FIELD EXCITATION 8-1
TESTING EXCITER ROTATING RECTIFIER DIODES 8-1
TESTING SURGE SUPPRESSOR 8-2

Katolight Service - Master Repair Manual - Page 580

Section 8
Generator Tests

MEASURING WINDING RESISTANCE 8-2
- A. Measuring Exciter Field Winding Resistance
- B. Measuring Generator Field Winding Resistance
- C. Measuring Exciter Armature Winding Resistance
- D. Measuring Generator Stator Winding Resistance

MEASURING WINDING INSULATION RESISTANCE 8-3
- A. Measuring Generator Stator Winding Insulation Resistance
- B. Measuring Generator Field Winding Insulation Resistance
- C. Measuring Exciter Field Winding Insulation Resistance
- D. Measuring Exciter Armature Winding Insulation Resistance

Section 9
Drying Windings and Removing and Installing Parts

DRYING GENERATOR 9-1
- A. Heated Enclosure
- B. Forced Air
- C. Oven

REMOVING GENERATOR FROM ENGINE 9-1
REMOVING AND INSTALLING EXCITER ROTOR 9-2
- A. Removing Exciter Rotor
- B. Installing Exciter Rotor

REMOVING AND INSTALLING TERMINAL BOX AND ENDBELL 9-2
- A. Removing Terminal Box and Endbell
- B. Installing Terminal Box and Endbell

REMOVING AND INSTALLING BEARING 9-4
REMOVING AND INSTALLING GENERATOR ROTOR 9-5
- A. Removing Rotor
- B. Installing Rotor

INSTALLING REPLACEMENT SURGE SUPPRESSOR 9-5

Section 10
Figures and Tables

GENERAL 10-1
Table 1 Generator Voltage Standard Kamag Generators 10-1
Table 2 Recommended Torque SAE 5 Steel and SAE 8 Steel Cap Screws 10-2
Table 3 Dimensions of Flywheels 10-3
Table 4 Minimum Air Gap for Kato Brushless Exciter 10-3

Figure 1 Single Bearing Kamag Generator with Outboard Exciter 10-3
Figure 2 Exciter Rotor Installation 10-4
Figure 3 Rotating Rectifier 10-4
Figure 4 Extension of Generator Rotor Shaft for Mounting of Exciter Rotor Assembly 10-5
Figure 5 SAE Flywheel 10-5
Figure 6 Single Bearing Generator Adaptor and Drive Plates 10-6
Figure 7 Recommended Torque Sequence for Circular Bolt Pattern 10-6
Figure 8 Checking Rotor Eccentricity 10-7
Figure 9 Checking Angular Alignment 10-7
Figure 10 Twelve Wire Generator Stator Lead Wire Connection Diagram 10-8
Figure 11 Exciter and Generator Field Interconnection 10-9
Figure 12 Field Excitation Measurement Meter Connection Diagram 10-9

SECTION 1
GENERAL INFORMATION, PRINCIPLES OF OPERATION AND MECHANICAL CONSTRUCTION

GENERAL

KAMAG AC generators are brushless 4-pole machines producing 60 Hz power at 1800 rpm or 50 Hz power at 1500 rpm. The generators are of the revolving field type, having rotating field poles called the rotor and a stationary armature called the stator. All standard units are broad voltage range machines that have twelve lead wires brought out from the stator coil groups. This feature permits connection of the stator winding in either three-phase wye, three-phase delta, or single-phase configuration. Table 1 lists the voltages that can be obtained from the output of KAMAG generators.

Single bearing generators are supplied with an SAE adapter and flexible drive disks on the drive end of the unit. Alignment of the generator frame and engine is ensured by the concentricity of the flywheel housing and the generator adapter, while alignment of the generator rotor and engine crankshaft is ensured by the concentricity of the drive disks and engine flywheel.

Drawings and tables are contained in Section 10 in this manual.

The major parts comprising the KAMAG generator are shown on Figure 1. Figure 10 is an electrical schematic of the generator field and exciter. The twelve stator lead wires and respective stator coil groups are shown on Figure 11.

PRINCIPLES OF OPERATION

Ac generators require direct current flowing through the field winding to set up the magnetic flux which generates ac power in the stator winding. An exciter, which is a small ac generator with rectified output, provides this direct current. While the generator armature is stationary and the field rotates, the exciter field is stationary and the armature and rectifier rotate.

The exciter itself requires direct current for excitation. This excitation may be provided by any dc power supply that provides the proper excitation. However, in order to keep the generator output voltage relatively constant, the dc excitation must be automatically regulated by means of a voltage regulator.

The voltage regulator provides regulated dc excitation. This device measures the generator voltage and compares the measured voltage with a pre-set voltage extablished by adjustment of a voltage adjust potentiometer or rheostat. It then uses the result of the comparative process to automatically control the excitation supplied to the exciter field winding. This action in turn regulates the excitation applied to the generator field winding, which controls the magnetic flux and thereby the ac power generated by the generator stator winding.

The voltage regulator requires electrical power for operation of its circuitry. Usually a portion of the power generated by the generator is used to power the voltage regulator.

MECHANICAL CONSTRUCTION

The major parts comprising the KAMAG generator are shown in Figure 1 and described in the paragraphs that follow.

Generator Frame and Stator

Rectangular steel bars welded to endrings provide rigid support for the stator, the generator endbell, and the adapter. Weldments rigidly secure the stator to the frame bars.

The stator core is composed of a stack of thin, notched electrical steel laminations assembled under pressure and welded to the frame bars. The semi-closed notched slots are Class F insulated; random wound coils are firmly wedged in the insulated slots. The stator coils in KAMAG generators are connected in three-phase groups with twelve lead wires that terminate within the terminal box. Stator wire connections are insulated and the entire stator is then impregnated with thermo-setting 100 percent solid bonding epoxy and baked under a controlled cycle. This process minimizes voids and ensures high dielectric strength and excellent moisture resistance.

Generator Frame Cover

A removable sheet metal cover encloses the generator frame.

Generator Rotor Assembly

A precision machined steel shaft, the four-pole rotating field, the exciter armature and the rotating rectifier comprise the rotor assembly. Also mounted on the shaft and provided with a replacement rotor are the drive hub and the generator bearing. A two-section fan mounts on the rotor at the adapter end of the generator.

Katolight Service - Master Repair Manual - Page 582

A. Shaft

The rotor shaft includes a keyway and key at the drive end for mounting the drive hub, a keyway and key for mounting the rotor field core, and a keyway and key for mounting the exciter armature and rotating rectifier.

B. Generator Field Poles

The four poles which carry the field windings are comprised of a stack of one-piece electrical steel laminations press-fitted together using a hydraulic press. Copper rods of the amortisseur winding are pressed into circular holes through the pole head portion of the core structure and welded to copper end plates that form the front and back section of the assembled field core structure. The field core structure is pressed on the shaft using a high pressure hydraulic press and keyed, forming a rigid rotating element. Round steel studs are pressed into each pole head for attachment of rotor balance rings at the front and back section of the field assembly.

Heavily insulated series-connected field coils are wound about the four poles. A support block made of insulating material provides coil support at the bottom and top of the field coil. Two lead wires are brought out to the rotating rectifier.

A thermo-setting epoxy is applied to the completed generator field assembly and the field assembly is baked under a controlled cycle to ensure high dielectric strength and mechanical strength.

C. Driving Hub and Drive Disks

The KAMAG single bearing generator is fitted with a precision machined interference fit drive hub that is keyed to the shaft. This hub carries a number of flexible steel drive disks which have holes for fastening to the flywheel. The outside and inside diameter are precision machined and bolt holes are precision located and drilled, ensuring concentric alignment with the drive hub and the engine flywheel. Ring shaped steel spacers used between the hub and disks provide a small amount of field adjustment to maintain proper alignment.

D. Air Circulating Fan

The fan consists of two half-sections that clamp together and are held securely in place on the shaft by two steel bolts. The fan mounts at the drive end of the generator between the drive hub and the generator field poles.

Ambient air is drawn into the outboard end of the generator, and passes over the exciter, across the outside of the generator stator windings and stator laminations, and through the air gap between the generator stator and field poles. This circulation of air removes heat from the windings and laminations. The cooling fan exhausts the heated air from the generator.

E. Bearing

Single bearing KAMAG generators have a duty-selected shielded ball bearing located at the outboard end of the generator. The bearing outer race is supported within a machined bearing housing located in the center of the endbell, while the inner race fits onto a machined section on the generator shaft. The bearing is factory packed with lubricating grease.

Exciter Rotor

The exciter rotor consists of the exciter armature wound with a three-phase winding and a full-wave rotating rectifier. Three-lead wires, one from each phase of the exciter armature winding, connect to the rectifier diodes as shown on Figure 11. The direct current from the rotating rectifier is conducted to the generator field through lead wires.

Two bolts mount the rectifier assembly to the exciter armature core structure. The entire exciter rotor unit slides over the generator shaft and is held in place by a rectangular key located in the shaft keyway and a retaining bolt and washer at the outboard end of the shaft as shown on Figure 2.

A. Exciter Armature

The exciter armature core structure is comprised of a stack of thin, notched, one-piece laminations held assembled under pressure and kept compressed and aligned by steel rivets through the stack of laminations. The semi-closed slots are insulated with Class F insulation, and the coils of the three-phase exciter armature

winding are then securely wedged in the slots. The entire exciter armature is completely impregnated with thermo-setting epoxy and baked under a controlled cycle. Three lead wires, one from each phase of the exciter armature winding, connect to the rotating rectifier as shown on Figure 11.

B. Rectifier

The exciter armature three-phase ac output is applied to a full-wave rectifier comprised of a positive heat sink, a negative heat sink, a molded insulating plate, a metal plate, three forward polarity diodes, three reverse polarity diodes, and a surge suppressor. The heat sinks are molded onto the insulating plate. The three forward polarity diodes mount on the positive heat sink, while the three reverse polarity diodes mount on the negative heat sink. A surge suppressor is mounted across the heat sinks. A generator field lead wire attaches to the positive heat sink while the second generator field lead attaches to the negative heat sink. This rectifier output circuit provides excitation to the series-connected generator field winding. Three wires, one from each phase of the exciter armature winding, attach to the diodes as shown in Figure 11. The complete rectifier assembly is held in place on the exciter armature by two bolts.

Exciter Field Assembly

The exciter field core structure is comprised of a stack of thin, notched electrical steel laminations that are held axially and tangentially aligned by a weldment across the stack of laminations. The steel laminations are of the type that retain residual magnetism. This residual magnetism produces a magnetic field which, when the generator is started, induces current in the exciter armature, providing the generator field with sufficient dc excitation for generator voltage build-up.

The slots in the exciter field core structure are insulated with Class F insulation and the coils are then firmly wedged in the slots. The coils are series connected; lead wires are brought out for connection to the voltage regulator dc output. The entire exciter field assembly is completely impregnated with thermo-setting epoxy and baked under a controlled cycle. Bolts that pass through holes in the exciter field core structure and thread into tapped holes in the bosses located on the generator endbell provide rigid mounting and ensure concentric alignment.

Endbell

A cast iron endbell encloses the outboard end of the generator. Precision machined matching pilot and recess on the endbell and generator frame endring ensure concentric alignment with the generator frame. The endbell is rigidly secured to the frame by bolts that pass through holes in the terminal box and in the endbell and thread into tapped holes in the frame endring. A machined bearing housing at the center of the endbell supports the outer race of the generator bearing while raised bosses with tapped holes provide mounting for the exciter field assembly.

Adapter

A cast iron adapter at the drive end of the generator mounts to the engine flywheel housing while the inboard side of the adapter mounts to the generator frame endring. The face on both the inboard and outboard surfaces are precision machined with pilot or recess to ensure concentric alignment with the generator frame and the engine flywheel housing. Bolts that pass through the holes in the adapter and thread into tapped holes in the frame endring rigidly secure the adapter to the frame, while bolts that pass through the adapter and thread into tapped holes in the flywheel housing rigidly mount the generator frame and stator to the engine.

Terminal Box

KAMAG generators include a large terminal box with ample room inside for the voltage regulator, most circuit breakers, and other options. The twelve generator stator lead wires and the exciter field leads terminate within the terminal box. The terminal box mounts on the outboard end of the generator.

SECTION 2
RECEIVING INSPECTION, HANDLING INSTRUCTIONS AND STORAGE

RECEIVING YOUR KAMAG GENERATOR

Upon receipt of the generator it is recommended that it be carefully examined to determine if any shipping damage has occurred before accepting the shipment from the transportation company

Generators received during freezing weather should be slowly warmed to prevent condensation of moisture on the windings.

WINDING INSPECTION

Winding inspection prior to operating the generator is recommended. If moisture is observed or condensation of moisture on the windings is suspected, a test of the stator winding insulation resistance should be made. If the result is less than the minimum value, the generator should be dried out.

Insulation resistance of the stator winding in the KAMAG generator should not be less than 1.48 megohms when calculated by the formula that follows.

$$\text{Minimum Winding Insulation Resistance in Megohms} = \frac{\text{Rated Voltage of Generator}}{1000} + 1$$

UNPACKING

Unpack the generator carefully. Make certain that foreign material such as crating nails and packing material does not enter the generator. Read all instruction cards and keep all instructions, drawings, and test cards with the generator as this information will be required by personnel when installing, operating, and servicing the equipment.

HANDLING INSTRUCTIONS

When installed, single bearing generator rotors are supported on the drive end by the drive disks bolted to the engine flywheel. While the engine is removed, the generator rotor must be supported by an appropriate fixture to prevent rotor, stator, or exciter damage.

KAMAG generators are shipped from the factory with rotor shipping support blocking bolted across the drive disks and adapter. Before transporting any generator, the main rotor must be supported by the adapter using an appropriate fixture.

After unpacking the generator, remove the exciter rotor. Leave the exciter rotor removed while transporting and coupling the generator to the engine.

CAUTION

Do not attempt to lift or transport any single bearing generator without proper rotor support. Failure to observe this precaution can result in extensive equipment damage. Make certain exciter rotor is removed while handling generator.

When lifting your KAMAG generator, attach an overhead crane to the lifting eye(s) located on the generator frame. Apply lifting force in a vertical direction if possible. Make certain that crane, lifting cables, and other hardware used is of sufficient strength to safely lift the weight of the generator. Generator weight may be determined by referring to the weight given on the shipment bill of lading.

WARNING

Do not lift complete generator set by means of lifting eye(s) on generator. Disregarding these instructions may result in serious injury or equipment damage.

WARNING

Do not apply any lifting force to generator fan for lifting or turning generator rotor. Failure to observe this instruction may result in serious injury or equipment damage.

STORAGE

When the generator will not be installed on the engine immediately it is recommended that it be stored in a clean, dry area which is not subject to rapid changes in temperature and humidity.

When storage will be for a period of six months or longer it is recommended the unit be wrapped with a thin water proof protective covering, and that a moisture absorbing agent such as bags of silica jel be placed within the covering.

SECTION 3
COUPLING AND ALIGNING GENERATOR AND PRIME MOVER

GENERAL

Flexible steel drive disks mount the generator to the engine flywheel while the face on the generator adapter mounts to the face on the flywheel housing.

Access to the interior of the generator is attained by removing the sheet metal cover that surrounds the stator. Access to the components mounted within the terminal box, such as the exciter and voltage regulator, is attained by removing the terminal box covers.

The generator rotor must be supported by appropriate blocking and the exciter rotor should be removed from the generator shaft while transporting the generator and coupling the generator to the prime mover. In case rotor support blocking has been placed in the generator air gap, be sure to remove support blocking after the bolts that mount the drive disks to the flywheel and the bolts that mount the adapter to the flywheel housing have been started. Install the exciter rotor after drive plate and adapter bolts have been tightened. Refer to the unpacking and handling instructions contained in Section 2 in this manual. Follow the procedure given in Section 9 when removing and installing the exciter rotor assembly.

The generator fan is made in two sections. Bolts hold the sections together and in place on the generator shaft. The fan can be taken apart in order to provide additional space while installing the bolts that mount the drive plates to the flywheel. Before removing or loosening the fan be sure to measure distance fan is located on the shaft from the generator field windings and the drive disks. Be sure to locate fan this distance on the shaft and be sure to tighten and torque fan bolts before operating the generator set. Do not pry on the fan blades. Refer to the handling instructions contained in Section 2 in this manual.

The top rib on the generator frame contains tapped holes for a lifting eye. The lifting eye provides a means for handling the generator. Do not lift complete generator set comprised of "coupled" engine and generator by the generator lifting eye(s). Refer to the handling instructions contained in Section 2.

PRE-COUPLING MEASUREMENTS

It is recommended the measurements that follow be made before coupling the generator to the prime mover.

A. Engine Crankshaft and Flywheel Deflection

Two methods often specified for measuring angular loading of coupled engine driven generator sets are a measurement of crankshaft deflection and flywheel deflection. Where specified by the engine manufacturer, deflection may be specified either as a maximum allowable deflection or as the difference between a measurement taken before the prime mover and generator are coupled and a measurement taken after the units are completely coupled. Where the latter is specified, be sure to make initial measurement before starting to couple the generator to the prime mover. Measure according to engine manufacturer's instructions.

B. Measuring Generator Drive Plate and Flywheel Driving Ring Pilot Bore

The generator drive plates fit into the flywheel driving ring pilot bore. To ensure correct fit, measure as follows.

1. Measure flywheel driving ring pilot bore diameter (dimension B, Figure 5). Compare measured diameter with dimension and tolerance given by flywheel manufacturer as shown in Table 3.
2. Measure generator drive plate diameter (dimension S, Figure 6). Drive plate diameter must not be greater than the flywheel driving ring pilot bore diameter.
3. Measure flywheel driving ring bore face runout. Compare measured runout with maximum tolerance specified by flywheel manufacturer.
4. Measure flywheel driving ring bore eccentricity. Compare measured eccentricity with maximum allowable eccentricity specified by flywheel manufacturer.
5. Measure eccentricity between the driving ring pilot bore B and pilot bearing bore L (see Figure 5). Compare eccentricity measured with maximum eccentricity specified by flywheel manufacturer.
6. Measure depth from flywheel housing face to the flywheel driving ring pilot bore face (dimension G, Figure 5). Compare measured depth G with dimension specified by flywheel manufacturer.

Katolight Service - Master Repair Manual - Page 587

7. Compare measured depth from flywheel housing face to flywheel driving ring pilot bore face (dimension G, Figure 5) with the depth from the generator drive plates to the generator adapter (dimension Y, Figure 6).

NOTE: Where dimensions G and Y are not identical, the circular spacer located between the generator drive hub and the drive plate may be removed or another spacer may be added. Before making any change be sure exciter is axially aligned and bearing has at least 1/8 inch endclearance. Excessive bearing endclearance may prevent bearing outer race from being fully seated in the bearing housing portion of the endbell.

C. Checking Exciter Alignment

Excessive axial misalignment of the exciter armature core and the exciter field can result in low generator excitation and excessive exciter field current. Alignment can be visually checked as given in the procedure that follows.

CAUTION

Do not pull or push on rotating rectifier or winding. Failure to observe this precaution can result in equipment damage.

1. Temporarily slide the exciter rotor (comprised of the exciter armature and rotating rectifier) onto the generator shaft. Make certain inside edge of the exciter armature core is against the raised step on the shaft.
2. Visually check axial alignment.
3. Remove exciter rotor. Install after generator has been coupled to the engine.

D. Checking Bearing Endclearance

Insufficient bearing endclearance can result in thrust load on bearing which will shorten bearing life. Before coupling generator to the engine check bearing endclearance. Refer to the procedure that follows.

1. Make certain generator rotor is axially aligned. Refer to preceding directions.
2. Wrap sling around generator drive hub and attach sling to hoist or place portable jack under drive hub. Take up slack but do not lift. Watch to make certain generator air gap is maintained.
3. Temporarily remove support block from drive end of the generator.
4. With exciter rotor removed, measure from end of the shaft to the bearing housing surface on endbell (dimension A, Figure 4).
5. Push on drive end of the generator rotor until rotor stops moving. This is zero bearing endclearance.
6. Again measure from end of the shaft to the bearing housing and compare this measurement with dimension A measured during step 4. The difference should not be less than 1/8 inch.
7. Remove cover from around generator and visually check to make certain bearing outer race is completely into the bearing housing section in the endbell.
8. Where measurement and checks made in preceding steps 6 and 7 are satisfactory, pull rotor back to the original position measured during preceding step 4.

NOTE: In case bearing endclearance is less than 1/8 inch or bearing outer race is not into the bearing housing, set for 1/8 inch bearing end-clearance, recheck exciter alignment, and then add or remove spacer as necessary from drive end of the generator to attain the correct Y dimension.

COUPLING AND MOUNTING GENERATOR ONTO ENGINE AND BASE

Couple the generator to the prime mover and mount the generator in accordance with the instructions provided by the engine generator set assembler.

The instructions that follow and those contained in preceding sections in this manual are included to facilitate correct coupling of the generator set and to help prevent equipment damage. Review preceding instructions before beginning the following procedure. It is recommended the "Pre-Coupling Measurements" be made before lifting the generator onto the generator set base (see page 3-1).

Katolight Service - Master Repair Manual - Page 588

CAUTION

The exciter air gap is small compared to the air gap within the main generator. Remove exciter rotor before transporting and coupling the generator to the prime mover. Failure to observe this precaution can result in equipment failure.

1. Lift generator onto base with overhead crane. Leave rotor support in place while lifting the generator.
2. Support drive end of generator shaft by wrapping a cable around the drive hub and attaching the cable ends to an overhead hoist or use jack under drive hub. Position jack base on either the generator adapter or the cross member on generator set base.

NOTE: Where generator has removable screen and cover around the adapter, those items may be removed to attain access for cable.

3. Remove wooden support block from face of drive plates and adapter and, where provided, remove support blocking from generator air gap. Be sure to maintain exciter and generator air gap.

NOTE: Step 4 that follows is necessary only where sufficient room does not exist for installing bolts that mount the drive plates to the flywheel.

4. Measure and record axial distance from fan to drive plates. Then loosen or remove fan. When installing fan be sure to position the fan according to this dimension.

WARNING

Do not lift or pry on generator fan. Failure to observe this precaution can result in serious injury and equipment damage.

Be sure to maintain air gap while following steps 5 through 9 that follow.

5. Attach drive plates to the flywheel. SAE Grade 8 bolts are recommended. Make certain plates fit completely into the driving disk recess bore in the flywheel. Move generator stator as necessary to maintain axial alignment of the generator rotor within the stator.
6. Remove sling and hoist from drive hub. Then torque coupling bolts (see Table 2 and Figure 7).
7. Use overhead hoist or jack to align adapter face with the flywheel housing. Check to make certain that faces are parallel using feeler gauge. Install and torque bolts (see Table 2 and Figure 7).
8. Level generator base with the generator set base. Use shims, when necessary.
9. Remove hoist from generator lifting eye(s).
10. Install and torque bolts that mount the generator to the base (see Table 2).

WARNING

Make certain that sufficient clearance exists between fan and stationary parts and make certain fan and fan hub bolts are torqued. Failure to observe this precaution can result in serious injury and equipment damage.

11. Install generator fan and torque fan bolts. See preceding step 4. Torque SAE 5 bolts according to torque listed in Table 2.
12. Check to make certain support blocking and other loose material is removed from air gap.
13. Measure distance from end of generator shaft to the bearing housing portion on endbell (dimension A, Figure 4). Compare measurement with that taken in steps 4 and 6 of preceding procedure titled "Checking Bearing Clearance."

CAUTION

Do not push on rotating rectifier or exciter winding. Failure to observe this precaution can result in equipment damage.

Install exciter rotor as described in steps 14 through 16 that follow.

14. Install key in keyway located in generator shaft. Align exciter rotor with key and push exciter rotor onto generator shaft. Make certain inside edge of exciter armature core is against raised step on shaft.
15. Connect generator field leads onto the (+) and (-) terminals located on the rotating rectifier heat sinks.
16. Install exciter rotor retaining bolt and washer. Torque 1/2 inch bolt to 60 foot-pounds.
17. Check exciter axial alignment.
18. Measure exciter air gap with feeler gauge as described in step19that follows. Air gap at tightest point should not be less than that listed in Table 4.
19. Measure completely around exciter air gap to determine tightest point. Then, keeping gauge at this point, bar engine or flywheel through one revolution, measuring air gap as rotor turns. DO NOT PRY ON GENERATOR FAN.
20. When specified by the engine manufacturer, test flywheel deflection or crankshaft deflection.
21. Measure generator rotor eccentricity as described in the procedure that follows.
22. Measure generator rotor angular alignment as described in the procedure that follows.
23. After coupling and mounting is complete and measurements are satisfactory, inspect to make certain all bolts are tight and torqued (see Table 2).

WARNING

When circuit breakers are not included with the generator, the terminals on the ends of the stator lead wires are not insulated. These terminals must be insulated before generator set is operated. Failure to observe this precaution can result in serious injury and equipment damage.

24. Bar engine or flywheel through at least one revolution, checking to make certain that clearance exists between stationary and rotating parts. DO NOT PRY ON GENERATOR FAN.
25. Check to make certain that tools and shop cloths are removed from in and around generator set. Make certain that wiring is connected and lugged ends are insulated. Then install generator covers.
26. Disconnect engine starting circuit; then operate engine through cranking cycle. Listen for any abnormal rubbing or scraping noises.

MEASURING GENERATOR ROTOR ECCENTRICITY

After the generator has been coupled to the prime mover, a measurement of generator rotor eccentricity should be made to ensure generator rotor shaft has been aligned with the engine. Do not pry on generator fan. Measure eccentricity and, where necessary, correct alignment as follows.

1. Mount dial indicator base on the generator adapter and position the dial indicator finger on the generator drive hub or generator shaft as shown on Figure 8.
2. Set dial indicator needle to zero.
3. Bar engine or flywheel one revolution. Do not pry on generator fan.
4. Eccentricity should not exceed .003 inch total indicator reading on 1500 rpm to 1800 rpm generator sets.
5. In the event eccentricity exceeds the maximum tolerance given above, align coupling as given in procedure 6 or 7 that follows.
6. Attach hoist and cable about drive coupling to support drive end of generator rotor or use jack under drive hub with jack base on adapter rib or base cross member. Loosen bolts that mount the drive plates to the flywheel. Then move drive plates in the direction within the flywheel driving ring recess bore that will decrease eccentricity. Remove cable hoist, torque bolts, and again measure eccentricity.
7. To decrease eccentricity it may be necessary to rotate the drive plates with respect to the flywheel driving ring pilot bore. Support the drive end on the generator rotor with a cable and hoist or jack. Remove coupling bolts and turn the flywheel. Be sure to keep the generator drive plates stationary. Rotate the flywheel to position where eccentricity will be minimum and bolt holes are aligned. The install and torque bolts, remove cable and hoist, and again measure eccentricity.

MEASURING ROTOR ANGULAR ALIGNMENT

After the generator has been coupled to the prime mover, a measurement of angular alignment of the generator rotor with the engine flywheel should be made. Measure angular alignment and, where necessary, correct as follows.

1. Measure approximate distance between shaft center and any convenient point on the flywheel slightly larger than the driving ring pilot bore. This dimension is used in the procedure described in steps 2 and 6 that follow.
2. Mount dial indicator base on the generator fan and position the dial indicator finger on the flywheel according to dimension measured in step 1 and as shown on Figure 9.
3. Set dial indicator to zero.
4. Do not pry on generator fan.
5. Bar engine or flywheel through one revolution while measuring angular runout.
6. Angular runout must not exceed ± .010 inch per foot of radius measured from shaft center to indicator finger. Where radius used during measurement is other than one foot, calculate according to dimension from preceding step 1.
7. In the event excessive angular runout occurs, inspect and measure or verify the previous measurements as necessary to ensure the items that follow were installed correctly and tolerances are within the specified limits.
   a. Make certain that drive plates are seated in the flywheel driving ring pilot bore and coupling bolts are torqued (see Table 2 and Figure 7).
   b. Verify that adapter face and flywheel housing face are aligned and bolts are torqued (see Table 2 and Figure 7).
   c. Verify that while mounting the generator to the base an angular load was not applied causing flywheel housing deflection. Check may be made by loosening mounting bolts and moving generator stator slightly with hoist or jack screws while measuring angular alignment.

NOTE: For some engine generator combinations, the flywheel housing may have to be supported by feet to attain angular alignment.

   d. Verify that flywheel deflection and crankshaft deflection are not excessive.
   e. Verify that the generator driving plate bore is concentric with the driving plate pilot on the generator drive hub.
   f. Verify that the flywheel housing face runout does not exceed specified tolerance.
   g. Verify that flywheel driving ring pilot bore face runout does not exceed specified tolerance
   h. Verify that the eccentricity between the flywheel pilot bore (L) and the driving ring pilot bore (B) does not exceed specified tolerance

SECTION 4
ELECTRICAL CONNECTIONS

GENERAL

KAMAG generators have twelve stator lead wires that terminate within the terminal box. The two lead wires from the exciter field winding also terminate within the terminal box.

The generator may be connected three-phase series wye, three-phase parallel wye, three-phase series delta, three-phase parallel delta or single phase. The units may be operated 60 Hertz, 1800 rpm or 50 Hertz, 1500 rpm. The voltage regulating system voltage control rheostat permits adjustment of generator output voltage.

Voltage generated when stator lead wires are connected in one of the configurations described above is listed in Table 1. Select the hookup that will provide the appropriate voltage. Be sure to connect the generator stator, load lines and voltage regulator as shown in the wiring diagram provided with the generator. Observe the general precautions that follow.

A. Three-Phase Wye Connected Generator

For a 4-wire system the neutral line may be brought out to the load distribution system. Where electrical code requires system ground, be sure the neutral leg is electrically connected to ground stud or ground wire.

B. Three-Phase Delta Connected Generator

Where generator is connected 3-wire delta, the stator connection neutral should not be connected to the ground stud and load lines do not contain a neutral line. The load conductors (phase A, B, and C) should not be grounded.

C. Single Phase Three Wire

Neutral (N) and two load conductors (L1 and L2) are contained in the load distribution system. Where electrical code requires system ground, neutral leg may be grounded.

D. Single Phase Two Wire

Two load conductors connect to the load distribution system. In single phase two wire 200-240 VAC applications where generator neutral is grounded, the two load conductors must not be grounded.

E. Generator Frame Ground

Generator frame should be connected to an earth ground in accordance with electrical code. Ground wire must be connected to the generator ground stud located above the left mounting foot.

F. Exciter Field Lead Wires

Exciter field lead wires F+ and F- connect to the voltage regulator output terminals F+ and F-. Be sure to maintain polarity. THIS CIRCUIT MUST NOT BE EITHER GROUNDED OR OPENED WHILE GENERATOR IS RUNNING.

G. Voltage Regulator

Refer to the voltage regulator instruction manual and the wiring diagram provided with the generator set. Make certain all internal and external connections are correct before operating the generator set.

CAUTION

Incorrect electrical connection of the voltage regulator can result in immediate equipment damage.

H. Voltage Regulator Fuse

This fuse protects the voltage regulator circuitry.

In applications where the generator set does not include a field circuit breaker it is recommended that a 1 1/2 ampere normal blow fuse be used in the voltage regulator. This would protect the Kamag generator against excessive voltage due to loss of sensing and excessive field forcing.

I. Voltage Regulator System Equipped with Paralleling Components

Refer to the voltage regulator instruction manual, the wiring diagram provided with the generator set, and the parallel operation instructions contained in Section 5 in this manual.

Where generators will be operated parallel, the voltage regulating system must include additional paralleling provisions either internally or external to the regulator and each regulating system must include a parallel operation current transformer.

Katolight Service - Master Repair Manual - Page 592

The parallel operation components may be connected by either of the two methods that follow.

1. **Reactive Voltage Droop Compensation (Formerly known as parallel droop compensation)**
   To attain reactive voltage droop compensation in parallel equipped voltage regulators, the generator set parallel operation current transformer connects to its respective voltage regulator. When connected in this manner the bus voltage droops, or decreases, as the reactive lagging power factor load is applied. Where this method is required, connect the current transformers as described in the voltage regulator instruction manual and generator set wiring diagram.
2. **Reactive Differential Compensation (Formerly known as cross-current compensation)**
   To attain cross current compensation in parallel equipped voltage regulators, the parallel current transformers are interconnected and also connect to their respective voltage regulators. Reactive differential compensation permits reactive load sharing without a droop, or decrease, in generator voltage. Where this method is required, connect the current transformers as described in the voltage regulator instruction manual and generator set wiring diagram.

J. Voltage Shutdown Switch (Engine Idle Switch)
Where this accessory is provided, connect as described in the voltage regulator instruction manual and generator set wiring diagram.

K. Field Circuit Breaker
Where this accessory is provided, connect as described in the voltage regulator instruction manual and the generator set wiring diagram.

L. Automatic/Manual Voltage Control
Where this accessory is provided, connect as described in the voltage regulator instruction manual and the generator set wiring diagram.

M. Space Heaters
Where this accessory is provided, connect as described on the generator set wiring diagram.

SECTION 5
OPERATION

PRE-START INSPECTION

Before operating the generator for the first time, the following checks are recommended.

WARNING

When circuit breakers are not included with the generator, the terminals on the ends of the stator lead wires are not insulated. These terminals must be insulated before generator set is operated. Failure to observe this precaution can result in serious injury and equipment damage.

A. Check to make sure bolts that mount and couple the generator onto the engine and engine base are tight.
B. Check to make sure fan bolts are tight and space exists between the fan and stator windings. Check to make sure exciter retaining bolt is tight.
C. Check all wiring against the proper connection diagrams and make sure all connections are properly insulated.
D. Inspect to make sure all packing materials and shipping support blocking has been removed. Remove loose cloths and tools.
E. Install covers and guards.

IDLING

Permanent equipment damage can be caused by having the generator set in operating mode while idling the engine. If engine adjustments require that the engine be run at idle speed, the generator set regulating system should be made inoperative by one of the methods that follow.

A. Where generator set is provided with voltage shutdown switch, be sure switch is set to IDLE position while engine is running at idle speed.
B. Where generator set is equipped with field circuit breakers, be sure the circuit breaker is set to OFF while engine is running at idle speed.
C. Where generator set includes an automatic/manual control with switch that has OFF position, be sure switch is set to OFF while engine is running at idle speed.
D. Where generator set does not include switches described above, be sure voltage regulator fuse is removed while engine is running at idle speed or remove wires from the voltage regulator input power terminals during underspeed operation of the generator set.

FIELD FLASHING

The generator relies on residual voltage to start the generator action which in turn generates the rated voltage. If the generator fails to generate voltage after it has come up to rated speed, it may be necessary to flash the exciter field. Field flashing must be done while the generator is at a standstill as described in the procedure that follows.

1. Stop the engine and open the output circuit breaker.

CAUTION

Be sure to maintain polarity (+) to (F+) and (-) to (F-).

2. Connect the negative lead (-) from a common 12 volt storage battery onto exciter field lead F-.
3. Connect the positive lead (+) from the battery onto exciter field lead F+. Only a few seconds flashing should be necessary.
4. Remove battery and connect exciter field leads onto voltage regulator terminals F+ and F-. Be sure to maintain correct polarity.
5. Start generator and check for satisfactory voltage build up.

VOLTAGE ADJUSTMENTS

A means for adjusting the voltage is incorporated in the regulator. For details refer to the voltage regulator instruction manual applicable for this unit.

VOLTAGE RANGE ADJUST

This control is incorporated in most voltage regulators. For details refer to the voltage regulator instruction manual applicable for this unit.

STABILITY ADJUSTMENT

This control is incorporated in most voltage regulators. It provides a means of adjusting a stabilizing signal which prevents generator voltage oscillation. For details refer to the voltage regulator instruction manual applicable for this unit.

STARTING UP THE GENERATOR FOR SINGLE UNIT OPERATION

The following procedures should be followed for starting up the generator set.

1. The generator output must be disconnected from the load. Be sure the main circuit breaker is open.
2. If fuses have been removed, install the fuses.
3. Where generator set is equipped with field circuit breaker, set breaker to ON.
4. Where generator set is equipped with voltage shutdown switch, set switch to RUN position.
5. Where generator set is equipped with Automatic/Manual control, set switch to AUTO position.
6. Where space heaters have been supplied with the generator set, turn off the heater before operating the generator.
7. Where generator sets are equipped for parallel operation and include UNIT/PARALLEL switches, set switch to UNIT position whenever generator is operated singly.
8. Start generator set and bring to rated speed. Adjust voltage to required value by means of the voltage adjust rheostat.
9. Close the main circuit breaker and apply load.
10. Adjust engine speed to 1800 rpm for 60 Hertz, 1500 rpm for 50 Hertz.
11. Before stopping the engine, remove the load by tripping the main circuit breaker.

PARALLEL OPERATION

KAMAG generators come standard with amortisseur windings. This feature makes all KAMAG generators suitable for parallel operation when the proper control equipment is added.

Generators operating parallel must deliver power to the load without delivering power to each other or accepting power from the load bus or power grid.

Additional equipment is necessary to ensure safe and successful parallel operation. The amount of control gear will be determined by the needs and requirements for the particular application. A description of the minimum control equipment necessary for parallel operation follows.

A. Prime Mover Governor

The prime mover speed will directly control the kilowatt load and frequency of the unit. The governor must have special paralleling and droop provisions to permit parallel operation with other units.

B. Voltage Regulator Paralleling Provisions

The voltage regulator controls the generator output voltage and the reactive power supplied by the generator. Where two or more generators operate parallel, the voltage regulators must have a similar characteristic, and each regulator must include paralleling provisions either internally or external to the regulator. These include an external current transformer for each regulating system, a voltage droop adjustment for each regulating system, and paralleling transformer or equivalent circuitry internally or external to the regulator. Where parallel systems are interconnected for reactive differential compensation, each regulating system should include either a UNIT/PARALLEL switch or auxiliary contact on the generator circuit breaker.

C. Synchroscope or Synchronizing Lights

Where generator is being paralleled with another generator supplying power to the system bus, the voltage of the incoming unit must be in phase with that of the load bus at the instant its circuit breaker closes.

Attempting to parallel units while out-of-phase voltage condition exists will result in very high transient voltage and mechanical strain which can result in extensive equipment damage.

A synchroscope or synchronizing lights provide means of determining when generator is inphase with the bus voltage.

D. Metering

In order to check for proper parallel operation, all generators should be equipped with the following monitoring equipment.

Synchroscope or Synchronizing Lights
AC Voltmeter
AC Ammeter
Frequency Meter
kW Meter
kVAR or Power Factor Meter

Automatic/Manual Control During Parallel Operation

Where one or more of parallel operation generator sets are equipped with automatic/manual control circuitry, all generators must be operated in the automatic voltage control mode during parallel operation. This is accomplished by setting the automatic/manual control selector switch to AUTO position.

Phase Rotation

For parallel operation each generator must have the same phase rotation with respect to the load bus. Each generator should be checked to ensure correct phase rotation before parallel operation is attempted.

Pre-paralleling Adjustments and Checks

Before operating generator sets parallel, each set should be checked by starting, operating, and adjusting the sets as individual units before paralleling.

The following points are basic criteria which must be met before two units can be paralleled.

A. The generators must have the same phase rotation. Test by using phase rotation meter or checking rotation of induction motor connected to load bus.

B. The voltage regulator characteristics of the individual generators should be similiar and must include parallel operation circuitry.

C. Paralleling current transformers must give the same secondary current.

D. Current transformer secondary winding provides reactive kVA droop signal to the voltage regulator. Accidental reversal of this electrical wiring will cause voltage to rise rather than droop. If this occurs, stop unit and reverse wires at voltage regulator terminals CT1 and CT2.

E. Each set must be individually adjusted for identical voltage droop. Individually test and adjust with an inductive load applied that is proportional to full load rating of unit.

F. Where generator sets include UNIT/PARALLEL switch, set switch to PARALLEL position on units being brought on the load bus.

G. The engines must have the same speed regulating characteristics, and the governors must be adjusted to give the same speed regulation. Individually test and adjust with load applied that is proportional to full load rating of generator.

H. Each engine governor must be adjusted for identical speed droop. Individually test and adjust by applying load that is proportional to full load rating of the generator.

Paralleling

Verify that units are properly equipped for parallel operation and adjustments have been made as described in preceding instructions. General procedure follows.

1. Where generator set includes automatic/manual voltage control, set AUTO/OFF/MANUAL switch on all units to AUTO position.
2. On generating systems equipped with UNIT/PARALLEL switches, set switch on unit being started (generator set No.1) to PARALLEL position (open). Set switch on remaining generator sets to UNIT position (closed).
3. Start generator set No. 1.
4. Adjust generator voltage and engine speed.
5. Apply the load.
6. Verify satisfactory voltage regulation and make certain frequency is not fluctuating.
7. Repeat procedures 1 and 2 on generator set No. 2.
8. Start generator set No. 2.

9. Adjust generator set No. 2 speed and voltage.
10. Adjust speed of generator set No. 2 slightly higher than that of generator No. 1.
11. Observe the synchroscope (or lights). When generator No. 2 is inphase with generator No. 1, close the circuit breaker for generator No. 2.
12. Immediately after closing the circuit breaker, measure line current of generator No. 2. It should be well within the rating of the generator. Also, immediately after closing the circuit breaker, observe the kW or power factor meters. The following conditions could occur.
    a. **A high ammeter reading accompanied by a large kW unbalance.** When this condition exists, the speed governor is either not adjusted correctly or is faulty.
    b. **A high ammeter reading accompanied by a large kVAR unbalance.** When this condition exists, the voltage regulating system is either not adjusted correctly or is faulty.
13. Adjust the speed of generator set No. 2 to the rpm where each generator is carrying the desired share of kW load. (See Note following procedure 14).
14. Adjust the voltage of generator No. 2 until the ammeter readings of both generators are near minimum. (See following Note).

NOTE: If kVAR or power factor meters are available, adjust voltage adjust rheostats for equal or proportional kVAR or power factor readings.

If the generators are equipped with power factor meters, alternately adjust the speed and voltage on No. 2 until the ammeter readings are proportional and the power factor readings are equal.

NOTE: To obtain best results, final adjustments should be made with full load on the bus.

15. With full load applied, readjust the speed and voltage of generator No. 2 until the desired load division is obtained.

NOTE: The best adjustment is obtained when each generator supplies the same percent of its rated current, the power factor readings are equal, or the sum of the ammeter currents is minimum.

16. In applications where three or more generators are to be operated parallel, repeat procedures 7 through 15 for generator set No. 3, then No. 4, etc.

Shutting Down One or More Generators Operating Parallel

Before dropping one or more generators operating parallel from the line bus it is essential that the total load on the bus is reduced to equal to or less than the combined capacity of the generators remaining on the bus. Shut down one or more of generator sets operating parallel as follows.

1. Reduce load to combined capacity of generators remaining on the bus.
2. On systems where the prime mover governor is equipped with a manual speed adjust, the load can be shifted to generators remaining on the bus by reducing the speed of the generator set being dropped from the bus.
3. Open the circuit breaker on the generator set being taken off the bus.
4. Close its UNIT/PARALLEL switch (on generator sets equipped with a UNIT/PARALLEL switch).
5. Shut down the prime mover.
6. In applications where three or more generators are operated parallel, repeat preceding procedures 1 through 5 for each generator set being taken off the bus.

SECTION 6
PREVENTIVE MAINTENANCE

INSPECTION

To ensure peak performance and maximum service life, the generator must be kept in good condition. This can best be ensured by periodic inspection of the unit and immediate repair of minor problems. The preventive maintenance inspection schedule that follows is enclosed as a guide for establishing a preventive maintenance program.

A. Daily or Whenever Generator is Operated

Before starting generator be sure air inlet and air exhaust screens are not clogged.

While generator is running be sure voltage is correct and not oscillating.

While generator is running observe any unusual noise or vibration.

B. Once Every Six Months

Remove terminal box cover and inspect wiring for signs of damaged insulation and loose or corroded connections. Repair damaged wiring; clean and tighten connections.

Inspect control devices for accumulation of dust, moisture or other foreign material. Clean using nylon bristle brush or compressed air at pressure between 25 PSI and 50 PSI.

Inspect to make certain that bolts which mount the voltage regulator, circuit breakers, meters, etc. have not loosened. Tighten as necessary.

Remove or loosen cover that surrounds generator frame. Inspect inside of generator frame. Inspect inside of generator for signs of damaged winding insulation and excessive dirt or moisture. Inspect to make certain bolts are tight.

CLEANING

A. Controls

Clean using nylon bristle brush or compressed air at pressure between 25 PSI and 50 PSI.

B.Generator

Wipe exterior of generator and air intake and exhaust with cloth or nylon bristle brush. Clean loose dust or other abrasive material from generator interior using compressed air at pressure between 25 PSI and 50 PSI.

SECTION 7
TROUBLESHOOTING

GENERAL

Loose, corroded, or broken connections and wiring errors are often the cause of generator malfunction. Before assuming problem is within the generator or voltage regulator, check condition of wiring and terminal connections and verify wiring according to wiring diagrams provided with the generator set.

TROUBLESHOOTING PROCEDURE

The troubleshooting information that follows is divided by symptoms. They are: no voltage, low voltage, high voltage, and voltage fluctuating.

Observe the safety precautions in the Safety Summary at the front of this manual before operating, testing or making repairs to this equipment.

A. No Voltage

1. Shut down the generator set.
2. Remove terminal box cover and check generator leads and interwiring to the voltage regulator for loose or broken connections.
3. Check regulator fuses with ohmmeter. If defective, replace.
4. Start up generator. Measure ac voltage at input power terminals on the voltage regulator. The voltmeter reading should exceed 7 vac. If it does not, field flashing is required. Refer to field flashing procedure in Section 5 of this manual.
5. Where voltage reading before or after field flashing exceeds 7 vac but output voltage fails to build-up, shut down the generator set. Then proceed as described to either step 6 or steps 7 and 8 that follow.
6. Connect meters as shown in Figure 12. Then start generator set and measure exciter field excitation as described in Section 8.
7. Shut down the generator set. Disconnect voltage regulator by removing the voltage regulator fuse. Where regulator does not include fuse, disconnect voltage regulator by removing the connections to the regulator input power terminals. Insulate terminal lugs on wires to prevent grounding during test described in step 8 that follows.
8. Disconnect wires F+ and F- from regulator output terminals F+ and F-. Connect a common 12 volt storage battery to wires F+ and F-, keeping the polarity the same. Start up the generator set. While the generator is operating at a rated speed, read the voltage output of the generator measured by a voltmeter. If the reading is one-half or greater of the rated output when there is no load on the generator, the problem is in the voltage regulator. If the voltage remains near zero, the voltage regulator is good, and the problem is most likely within the exciter or generator. Shut down the generator. Reconnect the voltage regulator and proceed to step 9.
9. Remove cover located on end of terminal box. Examine the rectifier diodes for loose or broken connections. Proceed to step 10.
10. Test the generator exciter rotating rectifier diodes as described in the procedure contained in Section 8. Refer to Figures 3 and 11. Install diodes and reconnect generator field leads.
11. Test surge suppressor as described in Section 8. Surge suppressor is mounted across the positive and negative heat sinks on the exciter rectifier. If test shows replacement is necessary, see installation instructions in Section 9. Part location and electrical connections are shown on Figures 3 and 11. Reconnect generator field leads. If test indicates surge suppressor is good, proceed to step 12.
12. Check windings for continuity as described in the winding resistance test procedure contained in Section 8. If opens or shorts are found in the exciter stator or exciter armature, replace the necessary component. If the condition is found in the generator stator or the generator rotor field winding, major repair or generator replacement is probably required.
13. Connect wiring in accordance with wiring diagram(s) provided with the generator set.

Katolight Service - Master Repair Manual - Page 599

B. Low Voltage

1. Test using auxiliary voltmeter connected at generator load leads.
2. Shut down the generator set.
3. Remove cover located at end of terminal box. Check main generator leads and wiring to the voltage regulator for correct connection. Make certain that connections are tight and not corroded.
4. Start up the generator set. Verify correct speed (1800 rpm for 60 hertz and 1500 rpm for 50 hertz).
5. Be sure the voltage adjust rheostat is adjusted as necessary to increase generator voltage.
6. Adjust the voltage range potentiometer clockwise to increase generator voltage.
7. Where voltage is normal with no-load applied but drops with load applied, make certain load does not exceed nameplate capacity. Verify using clamp-on ammeter on the generator load lines. Current in any line must not exceed nameplate amps.
8. Shut down the generator set and open the output circuit breaker.
9. Check wiring to the voltage regulator sensing and input power terminals. Where voltage regulator has multi-tap sensing transformer, make certain connections to the transformer are correct. Where voltage regulator has different internal connections for 60 Hertz and 50 Hertz operation, verify connections are correct. Where voltage regulator is of the series boost saturable transformer type, verify that boost winding is connected correctly. Refer to the voltage regulator instructions and the wiring diagrams provided with the generator set. Where connections are found to be correct, proceed as follows.
10. Continue by testing either field excitation as described in step 11 or test using battery as described in steps 12 through 14.
11. Connect meters as shown in Figure 12. Then start generator set and measure exciter field excitation as described in Section 8.
12. Disconnect the voltage regulator by removing wires at the regulator input power terminals and the regulator output terminals F+ and F-. Tape ends of input power wires to prevent accidental ground or short during the test described in step 11.
13. Connect a common 12 volt storage battery to exciter field lead wires F+ and F-, keeping the polarity the same. Start up the generator set. While the generator is running at rated speed, read the voltage output. If the reading is one-half or greater when there is no-load on the generator, the problem is in the voltage regulator. If the reading remains near zero, the problem is most likely within the exciter or generator.
14. Shut down the generator set. Remove battery and reconnect voltage regulator determined to be in good condition. If preceding test indicated that the problem was within the exciter or generator, test as described in the steps that follow.
15. Remove the cover located on end of terminal box. Examine the rotating rectifier diodes for loose or broken connections. If connections are good, proceed to step 16.
16. Test rotating rectifier diodes using an ohmmeter as described in Section 8. If one reading is high and the other is low, the diode is good. A shorted diode will have very low resistance in both forward and reverse polarity while an open circuited diode will exhibit high resistance in both forward and reverse polarity. Install good or replacement diodes. Connect generator field leads.
17. Test surge suppressor as described in Section 8. Install replacement surge suppressor as described in Section 9. Re-connect generator field leads. If test indicates that surge suppressor is good, proceed to step 18.
18. Check windings for continuity as described in the winding resistance test procedures contained in this manual. If opens or shorts are found in the exciter stator or exciter armature, replace the necessary component. If the condition is found in the generator stator or rotor, major repair or generator replacement is probably required.

C. High Voltage

1. Verify by testing with an auxiliary voltmeter at the generator load lines.
2. Be sure the voltage adjust rheostat is adjusted as necessary to reduce voltage.
3. Adjust the voltage range potentiometer in the voltage regulator counter-clockwise to reduce voltage.
4. Shut down the generator set and open the generetor output circuit breaker.
5. Remove terminal box cover and check generator set wiring for correct connection.

6. Check wiring to the voltage regulator sensing and input power terminals for correct connection. Check voltage regulator sensing transformer for correct connection. Where voltage regulator includes different internal connections for 50 Hertz or 60 Hertz, verify that connections are correct. Where voltage regulator is of the type that has boost transformer or winding, verify that connections are correct. Refer to the wiring diagrams provided with the generator set and the voltage regulator instructions.

D. Voltage Fluctuating

1. Verify generator voltmeter performance using auxiliary voltmeter at generator lines.
2. Verify engine governor performance with a tachometer to ensure stable engine speed.
3. Where generator is providing power to SCR type load, transient voltage spikes during SCR switching can cause voltage to fluctuate. If this is the case, set stability adjust for slower regulator response.
4. Adjust voltage regulator stability control potentiometer as described in the voltage regulator instruction manual. Test with no load applied and again with load applied.
5. Shut down generator set and open generator output circuit breaker. Remove the terminal box cover and check all wiring for loose connections.
6. Where wiring is found to be correct and in good condition, proceed to either step 7 or steps 8 and 9.
7. Connect meters as shown on Figure 12 and measure exciter field excitation as described in Section 8.
8. Shut down generator set and remove cover located on end of terminal box. Proceed to step 9.
9. Disconnect the voltage regulator by removing the connections to the regulator input power terminals. Tape lugged ends on wires to prevent ground or short during test. Remove F+ and F- exciter field lead wires from the F+ and F- terminals on the voltage regulators. Connect a common 12 volt storage battery onto exciter field leads F+ and F- keeping the polarity the same. Start up the generator set. While generator is operating at rated speed, read the voltage output on a voltmeter. Following this procedure, if the voltage is one-half or greater of rated output and does not fluctuate when there is no load on the generator, the problem is within the voltage regulator. Consult the voltage regulator instruction manual for further information.

SECTION 8
GENERATOR TESTS

MEASURING EXCITER FIELD EXCITATION

Exciter field excitation can be measured using a dc voltmeter and dc ammeter connected in the circuit between the voltage regulator dc output and exciter field as shown in Figure 12. The meters must be capable of measuring full load excitation. This will vary according to the size of the generator and can be determined from the test card attached to the generator or by contacting Kato Engineering/Reliance Electric, Mankato, Minnesota. Be sure to provide the generator serial number when requesting information.

Procedure

Observe the safety precautions in the Safety Summary at the front of this manual before operating, testing or making repairs to this equipment.

1. Connect dc voltmeter and dc ammeter as shown in Figure 12.
2. Start unit and run at rated speed.
3. Measure no-load excitation. The following abnormal conditions could occur.
   a. **Generator Output Voltage Low, with Normal or Higher than Normal Excitation**
      If this condition occurs, the problem is within the generator or exciter. Test the rotating rectifier diodes and winding resistance.
   b. **Generator Voltage Low and Excitation Low**
      If this condition occurs, the problem is within the voltage regulator or the wiring to the voltage regulator.
   c. **No Generator Voltage and No Excitation**
      If this condition occurs, flash exciter field to restore residual magnetism as described in the procedure given in Section 5 in this manual.
4. Measure excitation with full load applied. The following abnormal conditions could occur.
   a. **Generator Voltage Low and Full-Load Excitation Normal or Higher Than Normal**
      If this condition occurs, verify that speed is not low. Make certain load does not exceed rated full load current given on the generator nameplate.
   b. **Generator Voltage Low and Full Load Excitation Low.**
      If this condition occurs, problem is within the voltage regulator.

TESTING EXCITER ROTATING RECTIFIER DIODES

Observe the safety precautions in the Safety Summary at the front of this manual before operating, testing or making repairs to this equipment. Refer to Figure 13 for test setup.

Stop generator set. Remove cover located on the end of terminal box. Test as described in the procedure that follows using ohmmeter or three-volt test light.

NOTE: Where three-volt test light is used: bulb should light when connected in low resistance circuit and should not light when connected in high resistance circuit.

1. Unsolder wire connected to diode, then remove diode from heat sink (see Figure 3).
2. Measure resistance across diode. Reverse meter probes and again measure resistance.
   A good diode will have low resistance in the normal direction of current flow and high resistance to reverse current. High resistance both forward and reverse indicates diode has become open and should be replaced. Where light is used, failure of bulb to illuminate in both forward and reverse tests indicates an open diode.
   Very low resistance both forward and reverse indicates a shorted diode.
   Where light is used, diode is shorted when light illuminates during both forward and reverse polarity test.
3. Install diode. Torque 15 inch-pounds. Where original diode is replaced, make sure replacement diode is of the same rating and polarity.

4. Solder wire onto diode (see Figures 3 and 11).
5. Repeat steps 1 through 4 until each diode has been tested.

TESTING SURGE SUPPRESSOR

Observe the safety precautions in the Safety Summary at the front of this manual before operating, testing or making repairs to this equipment.

Refer to Figure 14 for test setup. Stop generator set. Remove cover located on end of terminal box. Disconnect one lead and check with lamp tester. The lamp should not light when the test leads are placed across the surge suppressor in either direction. If the lamp lights, it indicates a shorted surge suppressor. Replace defective surge suppressor with one of the same specifications as the surge suppressor installed at the factory. Order by part number and include the serial number of the generator.

MEASURING WINDING RESISTANCE

Observe the safety precautions in the Safety Summary at the front of this manual before operating, testing or making repairs to this equipment.

Resistance test of winding may be made to determine whether winding has become open circuited. Resistance measured across a winding that has become open circuited will be very high (near infinity). In the case of shorted turns, resistance will generally be lower than normal. Where shorted turns are suspected, additional test using growler is recommended. Short to ground may be determined by testing winding insulation resistance using a hand cranked 500 VDC megger.

Resistance of winding will vary in proportion to the winding temperature. Where winding temperature is either higher or lower than 25°C (77°F), the formula that follows should be used to compute resistance.

$$\text{Resistance at } 25^\circ\text{ C} = \text{Measured Resistance} \times \frac{234.5 + 25}{234.5 + \text{Winding temp. in } ^\circ\text{C}}$$

A. Measuring Exciter Field Winding Resistance

Test as follows:

1. Stop generator set and remove cover located on end of terminal box.
2. Remove exciter field leads F+ and F- from the F+ and F- terminals on the voltage regulator.
3. Connect ohmmeter onto exciter field leads F+ and F- and measure exciter field winding resistance.
4. Where winding temperature is either high or lower than 25° C, compute resistance as given in the formula contained in preceding topic "Measuring Winding Resistance."
5. Before starting generator set be sure to connect field leads onto voltage regulator terminals F+ and F-. Maintain correct polarity (F+ to F+ and F- to F-).

B. Measuring Generator Field Winding Resistance

Test as follows:

1. Stop generator set and remove cover located on end of terminal box.
2. Remove generator field leads from the exciter rotating rectifier heat sink (+) and (-) terminals.
3. Connect test instrument such as Wheatstone bridge or Kelvin bridge onto generator field leads and measure generator field winding resistance.
4. Where winding temperature is either higher or lower than 25°, compute resistance as given in the formula contained preceding topic "Measuring Winding Resistance."
5. Before starting generator set, be sure to connect generator field leads onto the rotating rectifier heat sinks. Maintain correct polarity (positive to + and negative to -).

C. Measuring Exciter Armature Winding Resistance

This test requires removing the exciter armature lead wires from the exciter rotating rectifier diodes (refer to Figures 2 and 3).

Test as follows:

1. Stop generator set and remove cover located on end of terminal box.
2. Observe which of the exciter rotating rectifier diodes each of the three exciter armature leads connect to. Then unsolder any two of the three exciter armature lead wires.
3. Measure exciter armature phase-to-phase resistance using test instrument such as Kelvin bridge connected between exciter armature phase 1 lead wire and phase 2 lead wire. Repeat measuring from phase 1 to 3 and again phase 2 to 3.
4. Phase to phase resistances should be quite similiar. Where winding temperature was either higher or lower than 25° C, compute resistance as given in formula contained in preceding topic "Measuring Winding Resistance."
5. Before starting generator set be sure to solder leads onto the exciter rotating rectifier diodes (refer to Figures 3 and 11).

D. Measuring Generator Stator Winding Resistance

The stator has twelve lead wires brought out from the coil groups permitting connection of the generator stator winding series wye, parallel wye, series delta, parallel delta, or single phase. It is recommended that when testing winding resistance the stator be connected three-phase series wye by connecting the stator leads as shown in Figure 9.

Test as follows:

1. Stop generator set and remove cover located on end of terminal box.
2. Disconnect the twelve generator stator leads numbered 1 through 12 from outgoing load lines, and the leads to voltage regulator, current transformers, and meters.
3. Connect stator leads in series wye configuration as shown in Figure 10 (a).
4. Measure resistance Phase 1 to 2 using a Kelvin bridge. Then measure Phase 1 to 3 and Phase 2 to 3. Phase to phase resistances should be quite similiar. Where winding temperature was either higher or lower than 25° C, compute resistance as given in formula contained in preceding topic titled "Measuring Winding Resistance."
5. Connect generator wiring as shown on the wiring diagram provided with the generator set.

MEASURING WINDING INSULATION RESISTANCE

Observe the safety precautions in the Safety Summary at the front of this manual before operating, testing or making repairs to this equipment.

The insulation resistance will slowly decrease over the normal life of the generator. Test will indicate abnormal decrease in insulation resistance. Where insulation resistance test is to be made, use a 500 VDC hand cranked megger.

A. Measuring Generator Stator Winding Insulation Resistance

1. Stop generator set and remove cover located on end of terminal box.
2. Disconnect wiring from the twelve generator stator lead wires.
3. Connect stator leads in series wye configuration as shown on Figure 10 (a). Be sure to remove neutral lead from ground connection.
4. Connect megger gound lead to generator frame.
5. Connect megger lead onto phase 1 stator lead wire number 1. Make certain no connections other than the megger ground lead are touching the generator frame or other metal parts.
6. Test stator winding insulation resistance. Resistance should not be less than 1.48 megohm. If insulation resistance is lower than minimum value given above, determine cause of low insulation resistance. If due to wet windings, dry out the generator as described in Section 9 in this manual.

7. Before operating generator, connect wiring as shown on the wiring diagram supplied with the generator set. Install covers.

B. Measuring Generator Field Winding Insulation Resistance

Use 500 VDC, hand cranked megger.

Test as follows:

1. Stop generator set and remove cover located on end of terminal box.
2. Disconnect the generator field leads from the (+) and (-) terminals located on the exciter rotating rectifier assembly heat sinks.
3. Connect megger ground lead onto either the generator shaft, fan, or drive hub.
4. Connect megger test lead onto either of the generator field lead wires. Make certain non-insulated lugs on field leads are not touching any generator parts.
5. Measure generator field winding insulation resistance. If the generator field winding insulation resistance is less than one megohm, determine cause of abnormally low insulation resistance. If due to wet windings, dry out generator as described in Section 9 in this manual.
6. Before operating the generator set, connect generator field leads onto exciter rotating rectifier heat sink (+) and (-) terminals (See Figure 3). Install covers.

C. Measuring Exciter Field Winding Insulation Resistance

Test using 500 VDC hand cranked megger as follows:

1. Stop generator set and remove cover located on end of terminal box.
2. Disconnect exciter field leads F+ and F- from the voltage regulator terminals F+ and F-.
3. Connect megger ground lead to the generator frame.
4. Connect megger test lead onto either exciter field lead F+ or exciter field lead F-. Make certain non insulated ends on leads F- and F+ do not touch any metal parts.
5. Measure exciter field winding insulation resistance. If insulation resistance is less than one megohm, determine cause of abnormally low insulation resistance. If due to wet winding, dry out generator as described in Section 9 in this manual.
6. Before operating generator set, connect F+ lead wire onto voltage regulator terminal F+ and lead wire F-onto voltage regulator terminal F-. Install covers.

D. Measuring Exciter Armature Winding Insulation Resistance

Test using 500 VDC megger as follows:

1. Stop generator set and remove cover located on end of terminal box.
2. Using soldering gun, disconnect the three exciter armature lead wires from the exciter rotating rectifier assembly (see Figures 3 and 11).
3. Insulate non-insulated ends on two of the lead wires to prevent grounding during test.
4. Connect megger test lead onto the remaining exciter armature lead wire. Make certain non-insulated connection does not touch any metal part during test.
5. Connect megger ground lead onto either the generator shaft, fan, or drive hub.
6. Measure exciter armature winding insulation resistance. If insulation resistance is less than one megohm, determine cause of abnormally low insulation resistance.
7. Before operating generator set, solder exciter lead wires onto the exciter rotating rectifier assembly (see Figures 3 and 11).

SECTION 9
DRYING WINDINGS AND REMOVING AND INSTALLING PARTS

DRYING GENERATOR

An excessive accumulation of moisture on the generator windings can reduce the winding insulation resistance. The recommended stator winding insulation resistance test procedure and the minimum allowable insulation resistance is described in Section 8 in this manual.

Where moisture is present and test indicates insulation resistance does not exceed the minimum standard, thoroughly dry out the generator before operating the machine. The following are recommended drying methods.

A. Heat Enclosure

Remove the generator cover. Enclose the generator and insert heating units such as space heaters, lamps, or coils of steam pipe to raise the temperature. Leave a hole at the top of the enclosure to permit the escape of moisture. Temperature within the enclosure should not exceed 93 degrees C or 200 degrees F. The voltage regulator and any electronic components must be removed from the generator when using this method.

B. Forced Air

A portable forced air heater can be used to direct heat into the exciter end of the generator through openings in the endbell. Heat at point of entry should not exceed 93 degrees C or 200 degrees F.

C. Oven

Place the machine in a thermostat controlled oven and bake it at a temperature not to exceed 93 degrees C or 200 degrees F. The voltage regulator and any electronic component accessories must be removed from the generator when using this method.

REMOVING GENERATOR FROM ENGINE

During this procedure be sure to follow the handling precautions described in Section 2 in this manual. Parts are shown on Figures 1 and 2.

1. Remove cover located on end of terminal box and disconnect incoming electrical cables.
2. Loosen cover that surrounds generator frame. Remove drip proof cover and screen from the adaptor located at driven end of generator.
3. Disconnect the generator field leads from the (+) and (-) terminals on the exciter rotating rectifier.
4. Remove exciter rotor retaining bolt from end of generator shaft.
5. Pull exciter rotor off generator shaft. Do not pull on the rectifier assembly or windings.

NOTE: If exciter rotor cannot easily be removed by hand, a 1/4 20 bolt can be threaded into the tapped hole next to the exciter rotor. This action will push the exciter rotor off the shaft.

6. Remove rectangular key from keyway in shaft. Keep key with the exciter armature.
7. Install lifting eye(s) in tapped hole(s) located in the top of the generator frame.
8. Remove bolts that mount the generator onto the generator set base.
9. Where additional space is required to remove coupling bolts, remove fan as follows:
   a. Measure and record distance from the drive plates to the fan. Fan must be located at this distance when it is re-installed
   b. Remove bolts that hold the fan half-sections together, then remove fan.
10. Where engine does not have rear mounting pads, be sure to support engine flywheel housing.
11. Support generator rotor. This may be done by installing (a) a cable around the generator drive hub and attaching cable to a hoist, (b) jack or blocking under the drive hub, or (c), thin wooden or fiber strips in the generator air gap.

NOTE: Where blocking will be placed in the rotor air gap it may be necessary to either remove fan or loosen wrapper cover in order to install rotor support blocking in the air gap.

12. Remove bolts that mount the generator adaptor face onto the flywheel housing.

13. Remove bolts that mount the generator drive plates to the driving ring recess in the flywheel.
14. Attach hoist onto lifting eyes.

CAUTION

Excessive axial misalignment of the rotor can result in equipment damage.

15. Carefully move generator away from the engine flywheel housing and the flywheel. Make certain that drive plates do not bind in flywheel driving ring recess. If the drive plates bind, bearing may be pulled out of the bearing housing.
16. Where rotor was supported by cable and hoist or jack or block under drive hub, remove support from drive hub and follow step 17.
17. Install block across generator adaptor and drive plates. Bolt to adaptor and drive plates to support rotor while transporting the generator.
18. Carefully lift generator off generator set base.

Follow the procedures contained in Section 3 in this manual when mounting generator on the generator set base and coupling the generator to the engine.

REMOVING AND INSTALLING EXCITER ROTOR

The exciter rotor, Figure 2, consists of the exciter armature and the full-wave rotating rectifier assembly. The assembly mounts on an extension of the generator shaft that protrudes beyond the generator endbell. The exciter rotor assembly is held in place on the shaft by a rectangular key on the shaft and a bolt and washer on the end of the shaft. The inside surface on the exciter armature core is pushed against a raised shoulder on the generator shaft.

A. Removing the Exciter Rotor

1. Remove cover located on end of generator terminal box.
2. Disconnect the generator field leads from the rotating rectifier (+) and (-) terminals.
3. Remove exciter retaining bolt from end of generator shaft.

NOTE: If exciter rotor cannot easily be removed by hand, a 1/4 20 bolt can be threaded into the tapped hole next to the exciter rotor. This action will push the exciter rotor off the shaft.

CAUTION

Do not pull on or strike the exciter armature windings.

4. Pull exciter rotor assembly off generator shaft. Pull rectangular key out of the keyway in shaft and keep it with the exciter rotor assembly.

B. Installing Exciter Rotor

1. Install rectangular key in keyway located in generator shaft.
2. Align keyway in the exciter armature core with the key and push exciter rotor onto shaft. DO NOT PUSH OR STRIKE WINDING OR RECTIFIER. MAKE SURE INSIDE EDGE ON ARMATURE CORE IS AGAINST RAISED SHOULDER ON SHAFT.
3. Install exciter retaining bolt on end of shaft. Torque 1/2 inch bolt to 60 foot-pounds.
4. Check exciter air gap. Air gap should not be less than that listed in Table 4. Check to make certain exciter armature core and the exciter field core are axially aligned.
5. Connect generator field leads onto rotating rectifier (+) and (-) terminals (refer to Figure 11).
6. Install cover on terminal box.

REMOVING AND INSTALLING TERMINAL BOX AND ENDBELL

These parts must be removed to service or replace the bearing or when removing the generator rotor. Be sure to

follow the handling precautions described in Section 2 in this manual. Parts are shown on Figures 1 and 2.

A. Removing the Terminal Box and Endbell

1. Remove the side covers and the louvered end cover from the terminal box.
2. Disconnect incoming electrical cables and conduit. Disconnect stator leads.
3. Disconnect electrical wiring from voltage regulator and other controls mounted within the terminal box.
4. Remove the exciter rotor, comprised of the exciter armature and rotating rectifier assembly. Follow the steps given in procedure titled "Removing the Exciter Rotor."
5. Remove fiber wire retaining ring.
6. Remove parts that mount onto the back plate of the terminal box and the endbell.
7. Remove cover that surrounds the generator frame.
8. Place rotor support blocking in the generator air gap.
9. Remove bolts that mount the terminal box and the endbell onto the generator frame.
10. Remove terminal box.
11. On larger generators, attach hoist onto endbell. Take up slack but do not lift generator.
12. Pry endbell loose from pilot recess located in the frame endring.
13. Pull endbell straight back to position where bearing outer race is out of the bearing housing at the center of the endbell.
14. Remove endbell.
15. Some units may have circular fiber spacers located in the bearing housing section of the endbell. If this is the case, be sure to install spacers when reinstalling endbell.
16. Inspect and clean rust and dirt from the mounting face on endbell and the bearing housing. Remove any metal burrs.
17. Wipe a thin coat of grease in the bearing housing section of the endbell.

B. Installing Terminal Box and Endbell

During this procedure be sure to follow the handling precautions described in Section 2 in this manual. Refer to Figure 1 and the wiring diagram provided with the generator set.

1. Where generator was provided with circular spacers in the bearing housing section of the endbell, install the spacers.
2. Inspect to make certain bearing housing and mounting face on endbell is free of rust, dirt, and metal burrs.
3. Wipe thin coat of grease in bearing housing section in endbell.
4. Lift endbell into alignment with the bearing and carefully push bearing housing section on endbell over the outer race of the bearing.
5. Place endbell over end of shaft and turn endbell to position where lead wire hole in endbell aligns with lead wires. Pull stator leads through opening in the endbell. Make certain generator field leads are along wireway on shaft.
6. Push endbell bearing housing over the bearing outer race.
7. Mount terminal box and endbell onto the generator frame using hex head bolts and washers. Watch to make certain endbell fits evenly into pilot recess, and sequentially tighten bolts. Torque bolts according to recommended torque for SAE 5 cap screws given in Table 2.
8. After generator has been coupled to the prime mover, remove rotor support blocking from generator air gap.
9. Install fiber wire retaining ring.
10. After generator has been coupled to the prime mover, install the exciter rotor as described in procedure titled "Installing Exciter Rotor."
11. Mount voltage regulator and controls.
12. Connect electrical wiring according to appropriate wiring diagram.
13. Before operating generator set, check to make certain unit is connected correctly and terminals are tight and insulated.
14. Remove tools and shop cloths.
15. Install covers and guards.

REMOVING AND INSTALLING BEARING

If the bearing needs to be removed for any reason, always install a new bearing. Remove and install bearing according to the general procedure that follows. Be sure to follow the handling precautions described in Section 2 in this manual.

1. Disconnect wiring and remove the exciter rotor, terminal box, and endbell. Refer to the preceding "Terminal Box and Endbell Removal" instructions and procedure titled "Removing the Exciter Rotor."
2. Remove fiber wire retaining ring.
3. Remove bearing with suitable puller.
4. Apply a thin coat of clean lubricating oil or anti-seize lubricant to the pressure fit on the rotor shaft.
5. Heat the new bearing in an oven to a maximum temperature of 225°F.

CAUTION

Under no circumstances should pressure be applied to the outer race of the bearing, as permanent bearing damage could result.

6. Make certain generator field leads are in proper position in the wireway along the generator shaft. Then using asbestos gloves, install the bearing over the end of the shaft. Using metal or fiber pipe with I.D. larger than the shaft, push against bearing inner race until bearing seats against the raised shoulder.

NOTE: The bearing should slide on the shaft and be seated without excessive force. If the bearing binds on the shaft before being fully seated, a piece of tubing slightly larger than the shaft diameter can be placed over the shaft and the bearing can be slid in place by tapping lightly on end of tubing with a soft mallet. Care must be taken to ensure pressure is applied to the inner race only.

7. Allow bearing to cool.
8. Install endbell and terminal box. Follow the "Endbell and Terminal Box Installation" instructions.
9. Remove rotor support blocking from air gap.
10. Install fiber wire retaining ring.
11. Install exciter rotor as described in procedure titled "Installing the Exciter Rotor."
12. Mount parts in terminal box and connect wiring as shown on the wiring diagram supplied with the generator set.
13. Remove tools and shop cloths.
14. Install covers.

REMOVING AND INSTALLING GENERATOR ROTOR

Generator parts are shown on Figure 1.

Be sure to follow handling precautions described in Section 2 in this manual. Rotor may be removed as described in the procedure that follows. BE EXTREMELY CAREFUL TO MAINTAIN CLEARANCE BETWEEN METAL PARTS AND WINDINGS.

A. Removing Rotor

1. Disconnect power and remove incoming electrical cable and conduit. Disconnect generator ground wire.
2. Remove end and side covers from terminal box.
3. Remove exciter rotor as described in the procedure titled "Removing the Exciter Rotor."
4. Install wooden rotor support blocking in the generator air gap.
5. Disconnect wiring and remove the voltage regulator and other parts mounted within the terminal box.

NOTE: Where a clear space approximately the same distance in length as the generator exists beyond the outboard or exciter end of the generator, unit need not be removed from the generator set base. If this is the case, and stator repair is not required, proceed to step 8.

6. Remove generator from the engine as described in procedure titled "Removing Generator From Engine." Be sure to follow precautions contained in Section 2 in this manual.

7. Transport generator to area that provides sufficient room for rotor removal through exciter end of unit. Approximately the same distance as length of generator must exist beyond exciter end of unit. Be sure to follow handling precautions contained in Section 2 in this manual.
8. Remove generator covers.
9. Remove fiber wire retaining ring.
10. Remove terminal box and endbell as described in the "Terminal Box and Endbell Removal" instruction. Be sure to follow handling precautions contained in Section 2.
11. Remove drive plates from the drive coupling hub.
12. Remove fan as follows:
    a. Measure from inside face on coupling hub to outside face on fan hub. Record this distance. Fan must be positioned according to this measurement when it is reinstalled.
    b. Remove bolts that secure the fan half-sections together, then remove fan.
13. Bend 16 gauge or heavier sheet metal to fit in air gap and extend beyond frame endring or use several plywood strips or wood that will extend through air gap and out past the frame endring.
14. Lift both ends of the rotor slightly and insert the blocking described in step 12. Be sure to maintain air gap.
15. Place blocks between the blocking and frame endring at the exciter end. Blocks should be of sufficient height to keep strips clear of windings.
16. Lower generator rotor onto blocking.
17. Carefully slide rotor part way out through exciter end of unit.
18. After rotor has been placed in position where field (rotor) poles are partially beyond frame endring, proceed to next step.
19. Attach cable around exciter field poles be careful to keep cable away from windings.
20. Attach hoist onto cable and, while balancing rotor, move generator rotor out of stator. Be careful to maintain air gap.

B. Installing Rotor

Installation procedure, in general, is the reverse of removal procedure. Torque bolts according to recommended torque for SAE 5 cap screws shown in Table 2. Be sure to position fan according to measurement made during removal procedure step 11. Be sure to follow precautions given in Section 2 in this manual. Follow alignment in section and measurements contained in Section 3.

INSTALLING REPLACEMENT SURGE SUPPRESSOR

Refer to Figure 3.

To remove defective surge suppressor: Use a screwdriver to loosen surge suppressor lead connections on the heat sinks. Pull leads free. Remove surge suppressor disk from slot on rectifier hub. Removal may be difficult as surge suppressor is secured with silicone rubber adhesive.

To install replacement surge suppressor: Install disk of surge suppressor in slot on rectifier hub and secure with silicone rubber adhesive. Take care not to block the tapped hole on the rectifier plate near the surge suppressor slot. Attach surge suppressor lugs to connections on the heat sinks and tighten connections.

SECTION 10
FIGURES AND TABLES

GENERAL

The drawings, electrical schematics, and tables contained in this section are included to aid in the installation and maintenance of this equipment. The overall electrical connection diagram supplied with the generator set should be followed when connecting the stator lead wires, voltage regulator, and any other operating controls provided with this unit.

Table 1
Generator Voltage - Standard Kamag Generators

Connection (See Note)	Voltage Range (By Adjustment of voltage control rheostat)	
	50 Hertz	60 Hertz
3 Phase series wye (Phase-to-Phase)	340 to 400	408 to 490
3 Phase parallel wye (Phase-to-Phase)	170 to 200	204 to 245
3 Phase series delta (Phase-to-Phase)	196 to 230	236 to 283
Single Phase 3 wire (Line-to-Line)	196-230	236 to 283

NOTE: Phase-to-neutral voltage for 3-phase wye connections are 58% of line-to-line voltages listed. Line-to-neutral voltage for 3 wire single phase is one-half the line-to-line voltage listed.

Table 2
Recommended Torque SAE 5 Steel and SAE 8 Steel Cap Screws

Shank Diameter (in inches)	Recommended Torque (in foot pounds) A.S.T.M. A449 S.A.E. 5 Steel	S.A.E. 8 Steel
1/4	9	13
5/16	18	28
3/8	31	46
7/16	50	75
1/2	75	115
9/16	110	165
5/8	150	225
3/4	250	370
7/8	378	591
1	583	893
1 1/8	782	1410
1 1/4	1097	1964
1 3/8	1461	2633
1 1/2	1748	3150

Table 3
Dimensions of Flywheels-Inches
(SAE Standard for Flywheels for Industrial Engines used for Drive Ring Type Overcenter Clutches and Engine Mounted Marine Gears - SAE -J620c)

Nominal Clutch Diameter	B see notes a,b	C	G	L see notes b,c	Tapped Holes (see note d)	
					No.	Size
6 1/2	8.500	7.875	1.19	2.0472	6	5/16-18
7 1/2	9.500	8.750	1.19	2.0472	8	5/16-18
8	10.375	9.625	2.44	2.4409	6	3/8-16
10	12.375	11.625	2.12	2.8346	8	3/8-16
11 1/2	13.875	13.125	1.56	2.8346	8	3/8-16
14	18.375	17.250	1.00	3.1496	8	1/2-13
16	20.375	19.250	0.62	3.9370	8	1/2-23
18	22.500	21.375	0.62	3.9370	6	5/8-11
21	26.500	25.250	0	5.1181	12	5/8-11
24	28.875	27.250	0	5.1181	12	3/4-10

NOTE:

a. Diameter tolerance of driving ring pilot bore B is plus 0.005, minus 0.000; maximum eccentricity is 0.005 total indicator reading (see footnote b); face runout is 0.0005 maximum total indicator reading per inch of diameter.

b. Eccentricity between driving ring pilot bore B and pilot bearing bore L is not to exceed 0.008 total indicator reading.

c. K is length of bore for pilot bearing; L is nominal diameter of bearing. Diameter and fit are to suit installation. Maximum eccentricity is 0.005 total indicator reading (see footnote b).

d. Tapped holes should be threaded in accordance with UNC Class 2B tolerances of the SAE Standard, Screw Threads-SAE J475.

Table 4
Minimum Air Gap for Kato Brushless Exciter

Exciter Rotor (Armature) Diameter (in inches)	Minimum Air Gap (in inches)
5 3/4	0.014
9 7/8	0.014
12/ 1/2	0.018
16 1/4	0.035

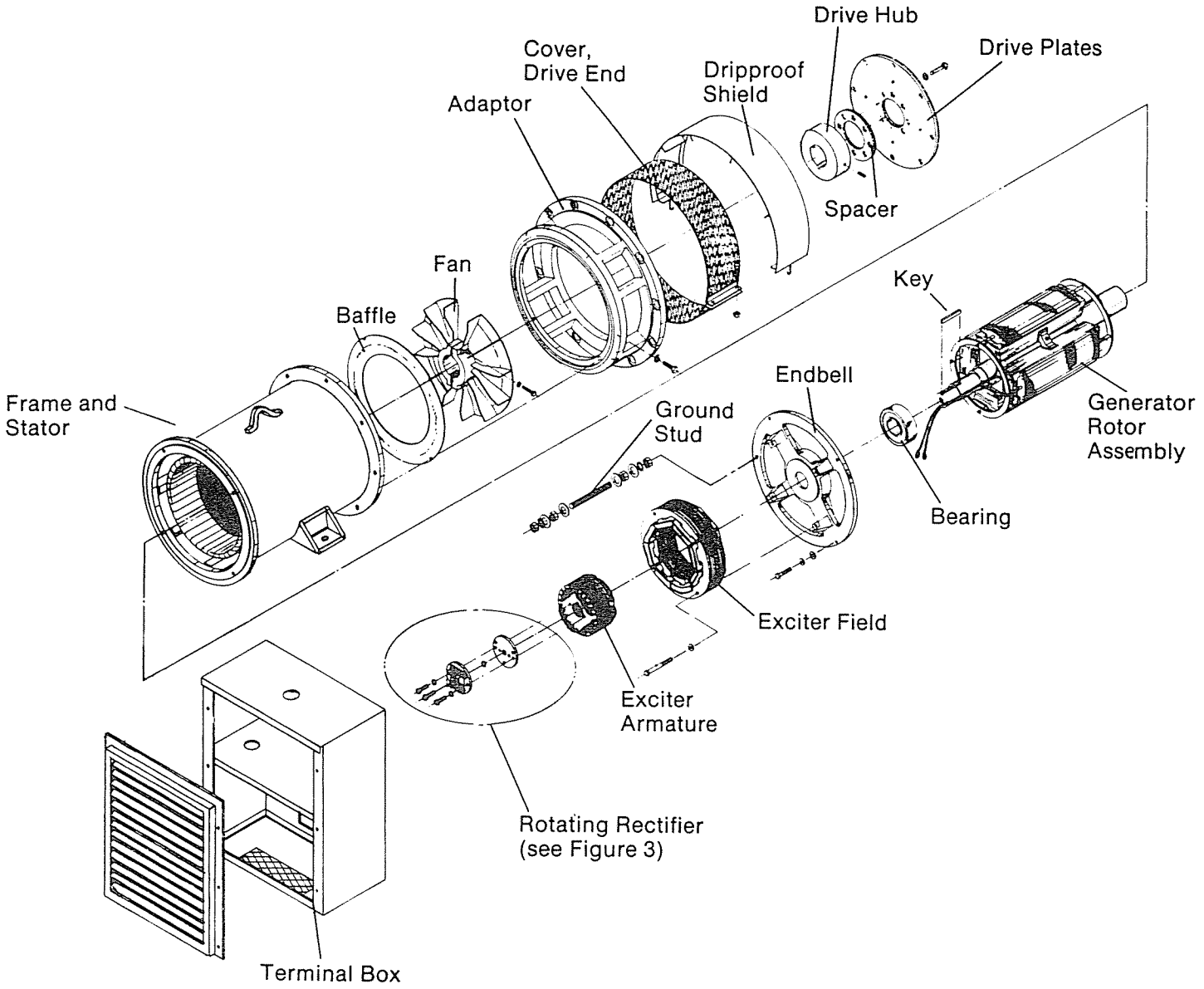

Figure 1 Single Bearing Kamag Generator With Outboard Exciter

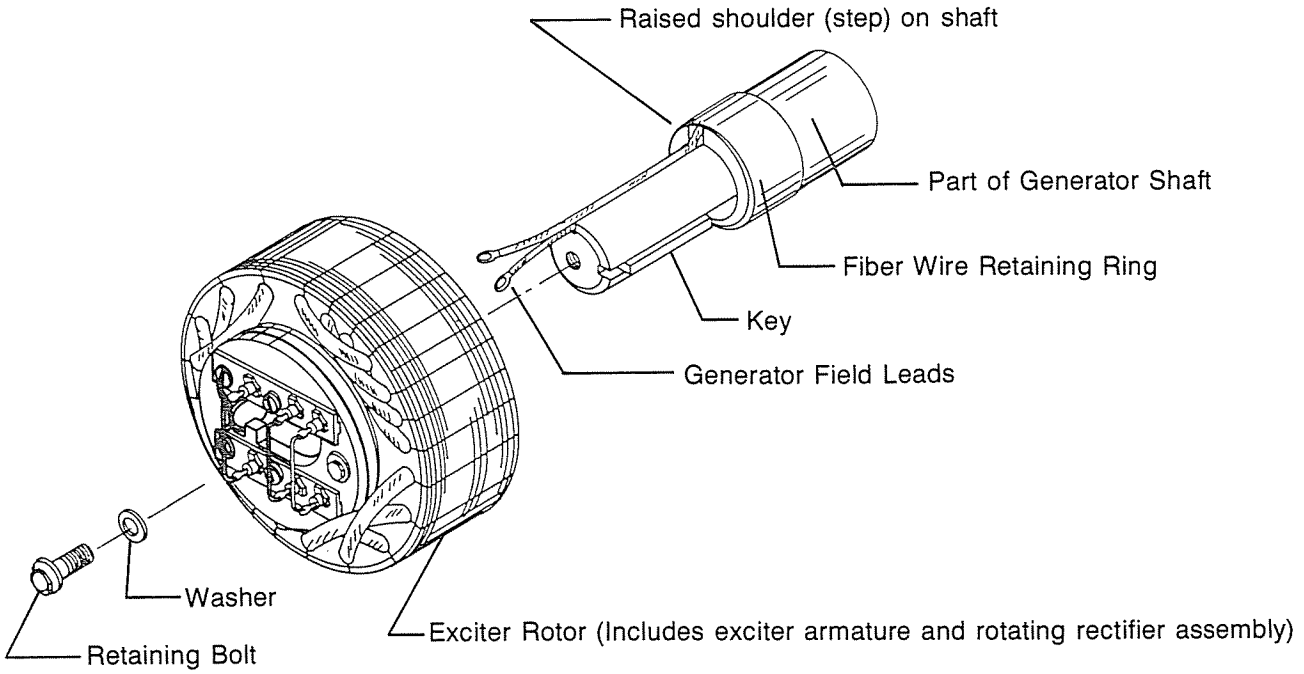

Figure 2 Exciter Rotor Installation

NOTE: Exciter and Generator Field Interwiring is shown on Figure 11.

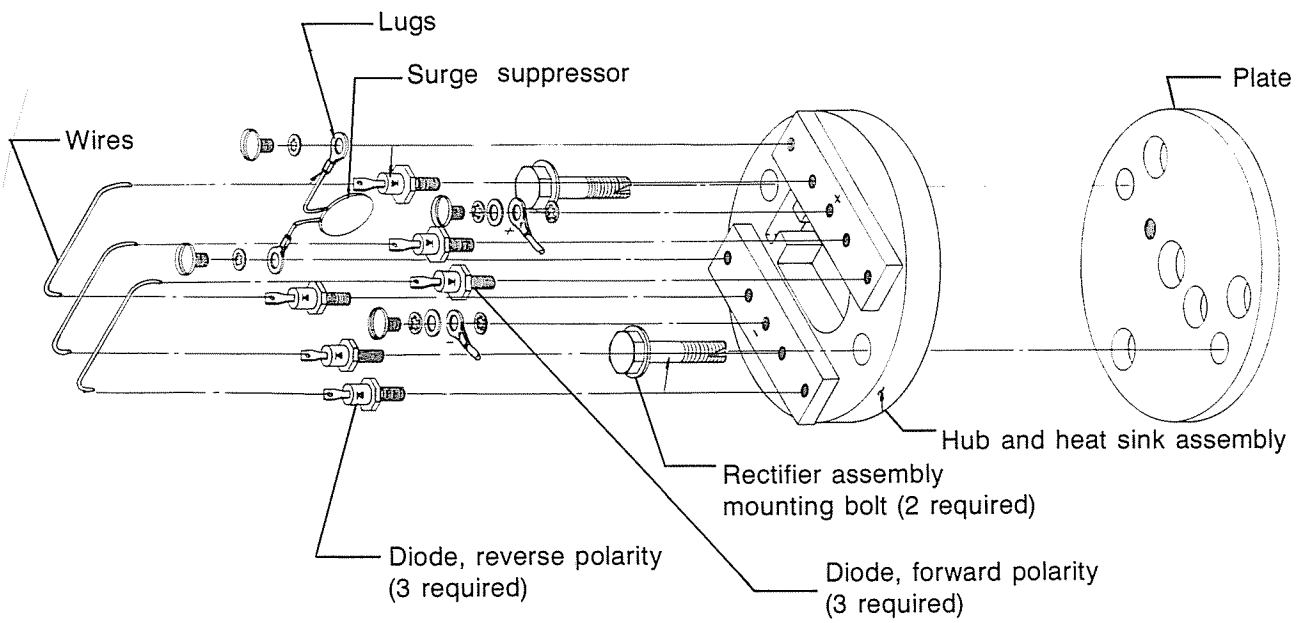

Figure 3 Rotating Rectifier

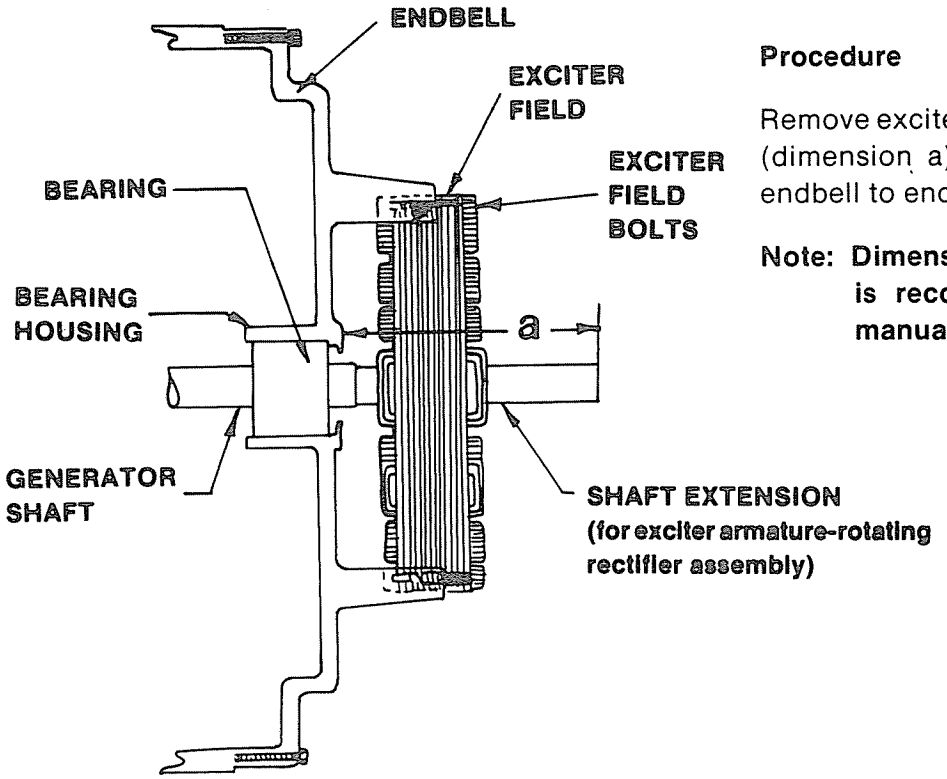

Procedure

Remove exciter rotor unit. Measure length (dimension a) from bearing housing on endbell to end of shaft.

Note: Dimension (a) measured at factory is recorded in section 1 in this manual.

Figure 4 Extension of Generator Rotor Shaft For Mounting of Exciter Rotor Assembly

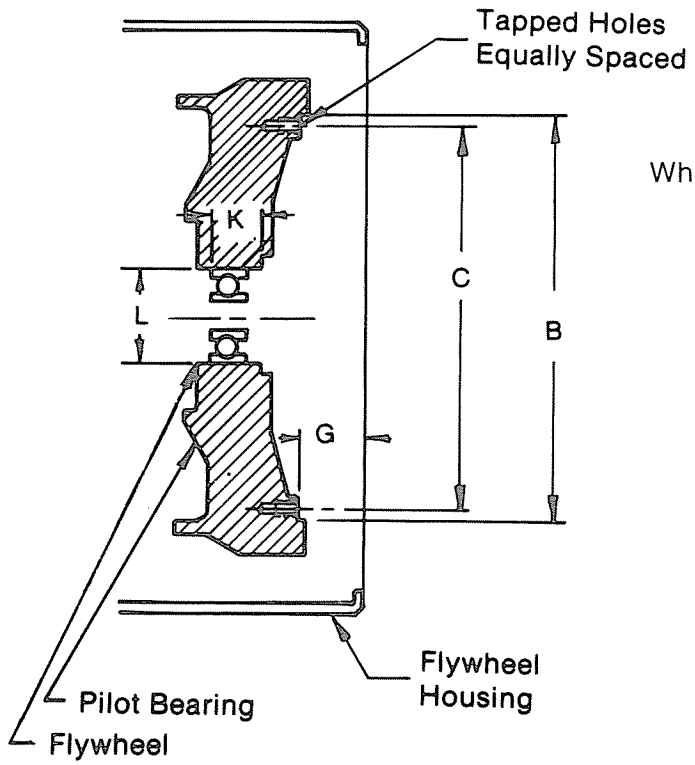

Where: B= Driving Ring Pilot Bore Diameter
C= Hole Centers
G= Depth from flywheel housing face
L= Pilot Bearing Bore
K= Length of bore for pilot bearing

Note: G measured from face on flywheel housing with tapped holes

See Table 3

Figure 5 SAE Flywheel

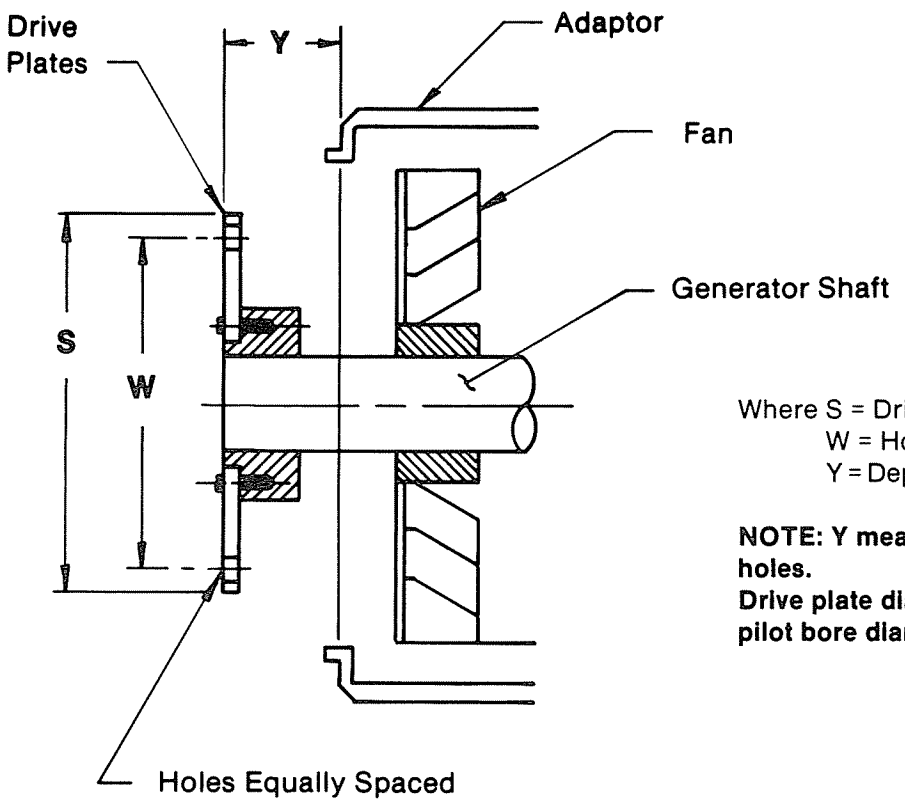

Where S = Drive Plate Diameter
W = Hole Center
Y = Depth from Drive Plate to Face on adaptor

NOTE: Y measured to face on adaptor with tapped holes.
Drive plate diameter S equals flywheel driving-ring pilot bore diameter B + .000
- .008

Figure 6 Single Bearing Generator Adaptor and Drive Plates

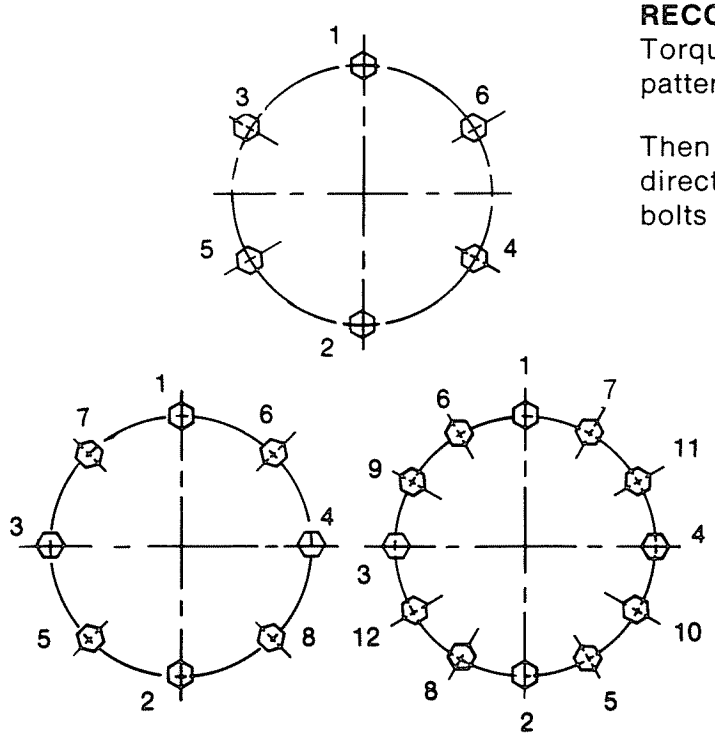

RECOMMENDED PROCEDURE
Torque bolts in sequence according to bolt pattern.

Then check torque in each bolt in clockwise direction around the bolt circle to ensure all bolts are properly torqued.

Figure 7 Recommended Torque Sequence For Circular Bolt Pattern

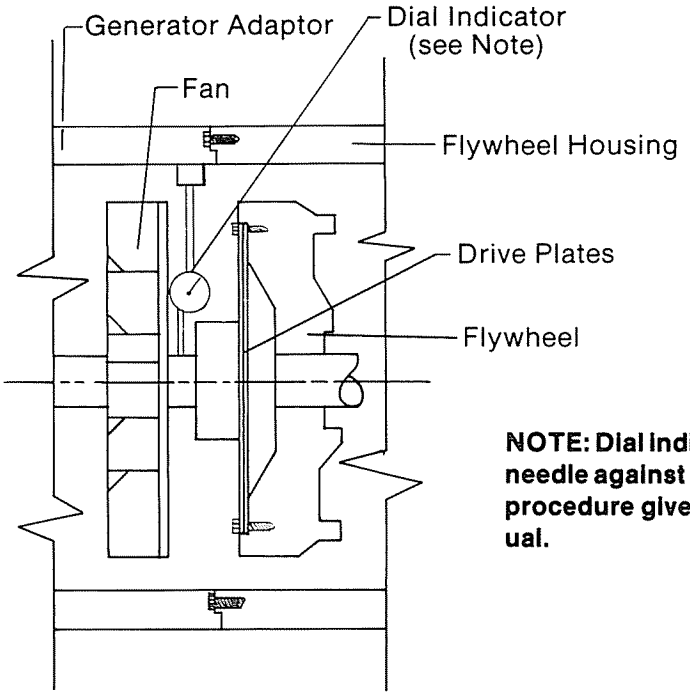

NOTE: Dial indicator base on adaptor and needle against shaft or drive hub. Refer to procedure given in Section 3 in this manual.

Figure 8 Checking Rotor Eccentricity

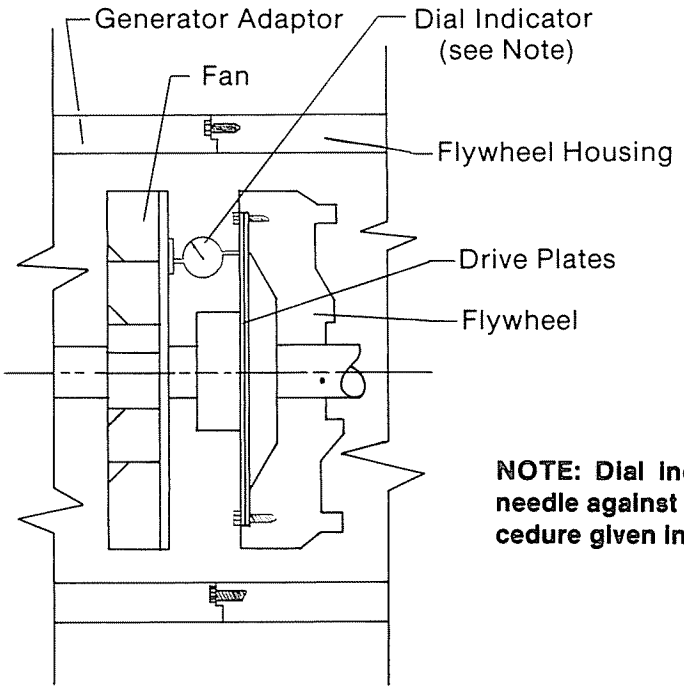

NOTE: Dial indicator base on fan and needle against drive plates. Refer to procedure given in Section 3 in this manual.

Figure 9 Checking Angular Alignment

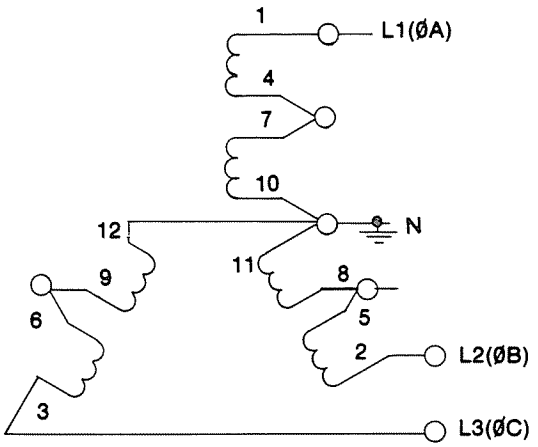

a. 3-Phase series wye

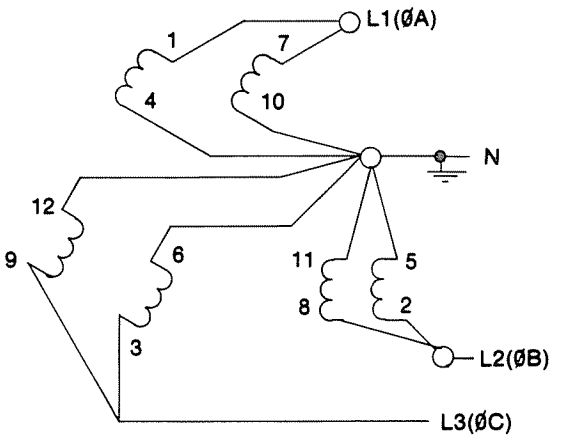

b. 3-Phase parallel wye

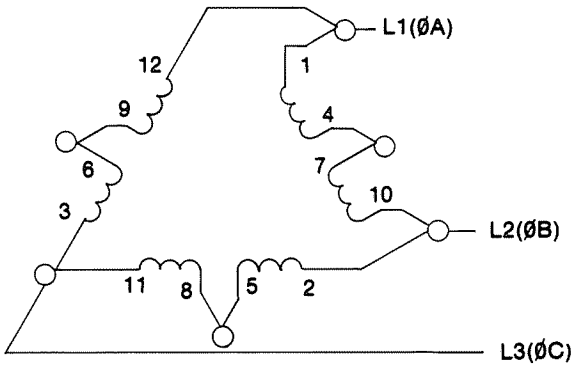

c. 3-Phase series delta

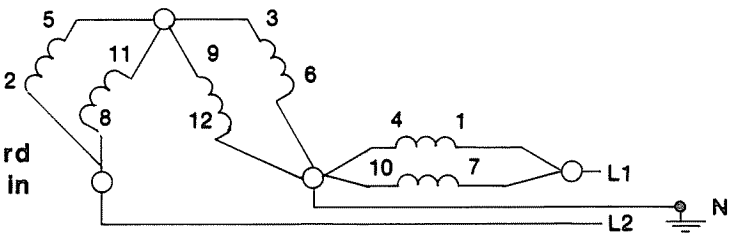

d. Single-phase, 3 wire

NOTE: Voltage Range for standard KAMAG generators listed in Table 1 in this manual.

Figure 10 Twelve Wire Generator Stator Lead Wire Connection Diagram

CAUTION

This drawing does not show interconnection for voltage regulator and other controls that could be provided with the generator set. Be sure to follow the wiring diagram provided with the generator set when making electrical connections.

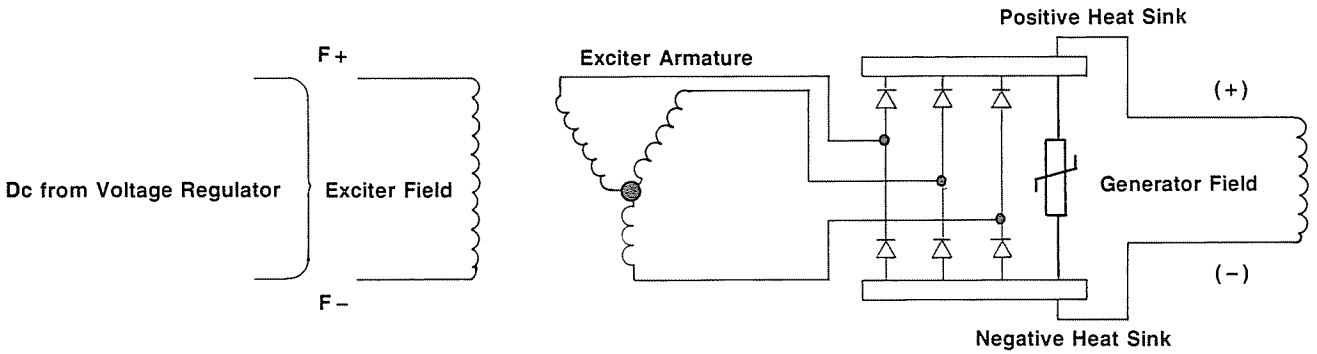

NOTE

Three forward polarity diodes are mounted on the positive heat sink, and three reverse polarity diodes are mounted on the negative heat sink. A surge suppressor is mounted across the heat sinks.

Figure 11 Exciter and Generator Field Interconnection

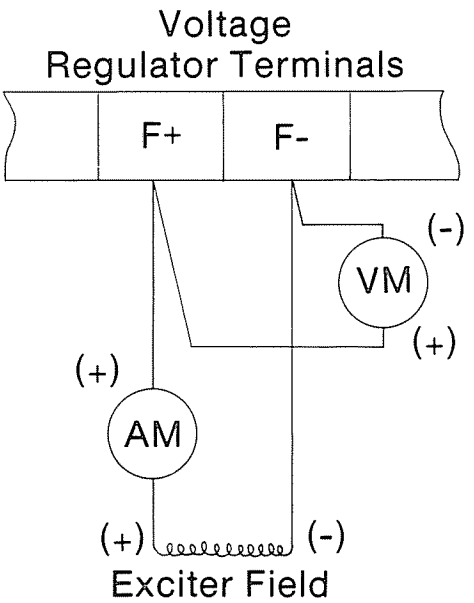

NOTE: Use dc voltmeter and dc ammeter with scale equal to or more than the one-minute field forcing capacity given in the voltage regulator instruction manual.

Figure 12 Field Excitation Measurement Meter Connection Diagram

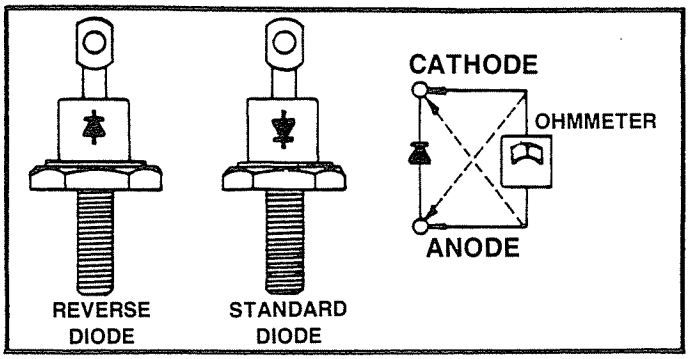

Figure 13 Testing Rotating Rectifiers with an Ohmmeter

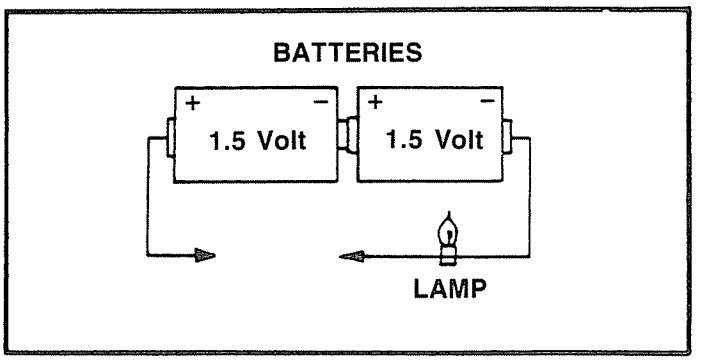

Figure 14 Testing Surge Suppressor with a Test Lamp

WARRANTY

Kato Engineering warrants that its products will perform as specified in bonafide quotations or Kato publications, providing such products are properly installed, properly cared for, and properly operated under normal environmental conditions.

Standard products manufactured by Kato Engineering are warranted to be free from defects in workmanship and material for a period of one year in operation or 18 months from date of shipment, and any products which are defective in workmanship or material will be repaired or replaced at the option of Kato Engineering. Final determination as to whether a product is actually defective rests with Kato Engineering. The obligation of Kato Engineering hereunder shall be limited solely to repair and replacement at its factory, of products that fall within the foregoing limitations and shall be conditioned upon receipt by Kato Engineering of written notice within the warranty period of any alleged defects or deficiency. No products shall be returned to Kato Engineering without its prior consent. In no case will Kato Engineering accept shipping charges incurred either through return of defective items to its factory or return of repaired or replacement items to the user. Kato Engineering cannot assume responsibility or accept invoices for unauthorized repairs to its components even though defective. In the case of components, parts or units purchased by Kato Engineering the obligation of Kato Engineering shall not exceed the settlement that it is able to obtain from the supplier thereof.

The life of the products of Kato Engineering depends to a large extent upon the type of usage. Kato Engineering makes no warranty as to period of service nor as to fitness of its products for specific applications by the buyer. In no event will Kato Engineering be liable for consequential or incidental damages or any expense incurred by the Buyer due to use or sale of products sold by Kato Engineering.

The foregoing warranty is exclusive and in lieu of all other warranties expressed or implied, including but not limited to any warranty of merchantability or of fitness for a particular purpose.

This Warranty does not apply to experimental or developmental products.

DEPENDABLE ELECTRICAL POWER EQUIPMENT BUILT TO PRECISE SPECIFICATIONS

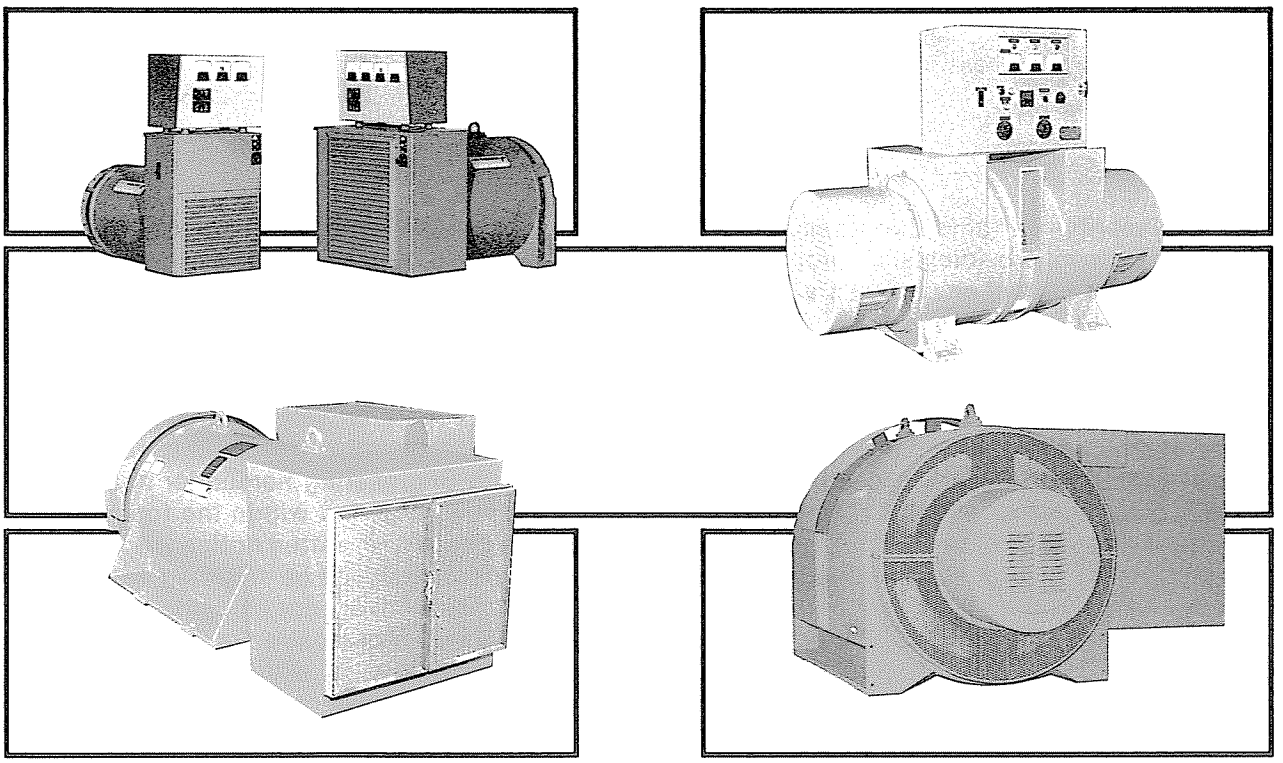

Assured Power Performance for Any Energy System

Prime Power

Emergency / Standby Power

Co-Generation

Load Isolation and Frequency Conversion

For quality products from 5 - 13,000 kW
contact Kato Engineering.

Rockwell Automation

ISO9001 Kato Engineering

P.O. BOX 8447
MANKATO, MN 56002-8447
(507) 625-4011
FAX (507) 345-2798

Printed in U.S.A.

Operation, Maintenance & Service Manual
Model MTG61 thru MTG85
Single Bearing

KATO Engineering Inc.

Packaged Generator Line

TABLE OF CONTENTS

Page No.

Forward/Safety First 1

Principle of Operation 2
Self Excited 2
Permanent Magnet (PM) Excited 2

Application of the Alternator 3

Receiving 3

Handling 3

Long Term Storage 3

Installation 4
Preparation 4
Inspection 4
Lifting 4
Single Bearing Mounting 4
Alternator to Engine 4
Output Connections 5
Insulation Testing 5
Moisture Removal 6

Operation 7
Pre-Operation Inspection 7
Engine Warm-up/Cool Down 7
Output Voltage Adjustment 7
Generator Set Start-Up 7
Exciter Field Flashing (Self Excited Only) 7

Service 8
Bearings 8
Windings 8

Page No.

Preventative Maintenance and Cleaning 8

Disassembly/Inspection 9
Alternator From Engine 9
Rectifier/Heatsink 9
Exciter Assembly 9
Exciter Assembly Inspection 9
Permanent Magnet Exciter Assembly 9
Permanent Magnet Exciter Inspection 10
Bearing Bracket 10
Bracket Inspection 10
Bearing Inspection 10
Main Rotor Assembly 10
Fan Inspection 10
Main Stator 10

Assembly 10
Bearings 10
Main Rotor 10
Bearing Bracket 10
Permanent Magnet Exciter Assembly 11
Exciter Assembly 11
Rectifier/Heatsink Assembly 11
Regulator/Accessories 11
Alternator to Engine 11
Terminal Box 11
Covers and Screens 11

Recommended Spare Parts 11

Torque Specification 12

Output Connections 13-14

Parts Identification 15

WARNING

Personal injury, death and/or equipment damage may occur if these instructions are not followed. All local and national codes must be followed. Power must be disconnected before servicing.

FOREWORD

This manual contains pertinent instructions for proper installation, operation, service and trouble shooting of your brushless alternator. The location of each section can be found in the table of contents. This manual is supplied with each alternator and should be reviewed by the installer, operator and maintenance personnel to insure safe and proper use.

SAFETY FIRST

All electrical and mechanical service should be performed by qualified personnel only. Ensure the installation meets all applicable safety and electrical codes. If you are not sure of the procedures or instructions, seek qualified help before proceeding.

- Power must be disconnected before servicing. Lock out all closing circuits. Place warning labels on circuit breakers and controls used to connect alternator to other alternators or utility mains to avoid accidental closure.
- Disable engine starting circuits before carrying out any maintenance.
- Do not operate the alternator with the terminal box, access covers or any of the protective covers or screens removed.
- Do not lift an entire generator set (alternator and engine) by the lifting provisions provided on the alternator. Personal injury or damage to the equipment may result.
- Observe all WARNING/CAUTION notices.

ELECTRICAL SHOCK CAN CAUSE PERSONAL INJURY OR DEATH

Katolight Service - Master Repair Manual - Page 628

PRINCIPLES OF OPERATION

Self Excited

The prime mover drives the revolving field assembly **(A, F, E)**.

As the revolving field assembly rotates, residual magnetism in the main revolving field **(A)** produces a small A.C. voltage in the main stator **(B)**.

The regulator **(C)** rectifies this small voltage and applies it to the exciter field **(D)**. A three phase voltage is then generated by the exciter rotor **(E)** which is rectified into DC by the rotating rectifier assembly **(F)**. This DC voltage then appears at the main revolving field which causes a higher A.C. voltage in the main stator.

The output voltage from the main stator is sensed by the regulator and compared to a reference level. The regulator controls the exciter field excitation to maintain a precise output voltage from the main stator.

The voltage build-up process takes place usually in less than one second.

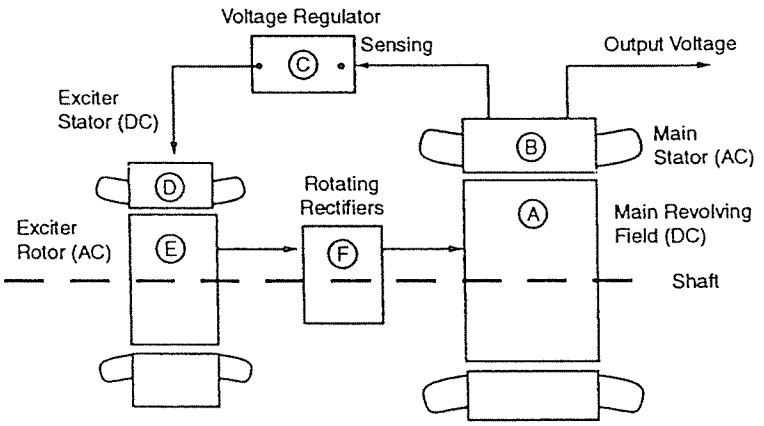

Permanent Magnet (PM) Excited

The prime mover drives the revolving field assembly **(A, F, E, G)**.

As the PM rotor **(G)** rotates, magnetism produces AC voltage in PM stator **(H)**.

The regulator **(C)** rectifies this voltage and applies it to the exciter field **(D)**. A three phase voltage is then generated by the exciter rotor **(E)** which is rectified into DC by the rotating rectifier assembly **(F)**. This DC voltage appears at the main revolving field **(A)** which generates AC voltage in the main stator **(B)**.

The output voltage from the main stator is sensed by the regulator and compared to a reference level. The regulator controls the exciter field excitation to maintain a precise output voltage from the main stator.

The voltage build-up process takes place usually in less than one second.

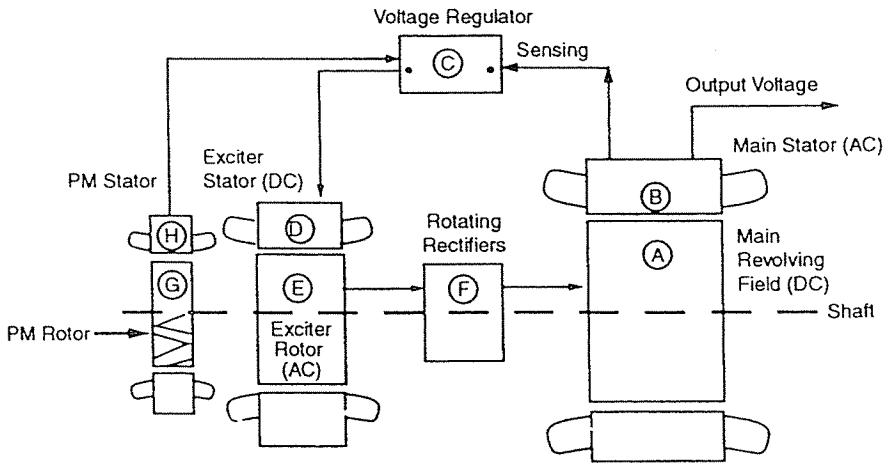

APPLICATION

The alternator is typically supplied as a component part to be used in a generator set. Warning/ Hazard labels are to be attached by the genset assembler or end user after the alternator has been attached to the engine, painted, etc. It is the responsibility of the genset assembler to be sure the correct labels are attached and are clearly visible.

The alternator is normally rated for operation in a maximum 40°C (104°F) ambient temperature, and at a maximum elevation of 1000 meters (3300 feet) above sea level. Should the alternator be required to operate in an ambient above nameplate rating or an altitude above 1000 meters, refer to the factory or the alternator set representative.

The alternators are typically of open, air-ventilated, screen protected construction and are not suitable for mounting outdoors unless adequately protected in an enclosure. Space heaters are recommended for storage and standby duty to keep the winding insulation in good condition.

When installed in a weather protecting or sound attenuating enclosure, the enclosure should be designed such that air intake to the alternator is not impeded and does not exceed the ambient temperature rating. The ingress of moisture and dirt should be avoided.

Single bearing alternators are supplied with SAE flywheel housing adapter and flexible drive disc. They are designed to match the engine flywheel housing and flywheel. Alignment of single bearing alternators is critical. A substantial base with engine and alternator mounting pads is required.

Torsional compatibility of the generator set and/or installation is the responsibility of the generator set manufacturer, his representative, the installer and/or the end user. Upon request, the necessary data for torsional analysis will be supplied.

Various types of non-linear loads consisting of Silicon Controlled Rectifiers (thyristors) present special problems for alternators. The problems are alternator stator heating and interference with the alternator voltage regulation system. The most commonly encountered SCR loads are battery chargers used with Uninterruptable Power Supplies (UPS Systems), solid state reduced voltage motor starters and variable frequency drive motor speed controls. Alternators typically require derating and isolation of the regulator through the use of a permanent magnet (PM) exciter, or filters.

RECEIVING

Before accepting your alternator it should be examined carefully for any damage that may have occurred during transit. If damage is noticed, the shipment should be refused and claim should be filed against the transportation company. Once acceptance of the shipment is made, the alternator is the property of the receiver and any damage due to handling will be the responsibility of the receiver.

HANDLING

Before unpacking your alternator, read the instruction card. If supplied, the lifting provisions should be used when lifting the alternator. Remove the alternator from the skid by using a suitable overhead hoist and lifting vertically.

LONG TERM STORAGE

If the alternator is to be stored, it should be in a clean, dry area that is not subject to large variations in temperature and/or humidity. Space heaters are recommended for storage and standby duty to keep the winding insulation in good condition.

INSTALLATION

Preparation

Before assembling the alternator to the prime mover, a visual inspection should be made. Inspect the output lead connections to make certain they are in agreement with the appropriate diagram in the back of this manual. Inspect all leads and wiring for insulation breaks, cracks and loose connections. All mounting bolts should be checked. All shipping supports, strips, tags and skids must be removed. **If the alternator has been in storage, the windings should be checked for ground resistance. See Insulation Testing Section.**

Inspection

The main stator winding should be checked for insulation resistance to ground with a megohmmeter (megger). This is particularly important if the alternator has been in storage.

For proper insulation testing, see Insulation Testing. If a low megohm reading is recorded, it is an indication of a wet, dirty and/or grounded winding. Clean and dry the windings using one of the methods listed for Moisture Removal.

CAUTION

Before using the megohmmeter, read the instructions thoroughly on Insulation Testing. Failure to do so can result in equipment damage.

Lifting

Lifting provisions are provided to allow lifting with an overhead crane or hoist and lifting clevis. Chains of suitable length and capacity must be used. A spreader bar is recommended to avoid damage to the terminal box and altrnator finish. **Design restrictions prohibit the center of gravity from being centered between the lifting points, the alternator may not remain horizontal while lifting. Care must be taken to avoid personal injury or equipment damage while lifting.**

CAUTION

Incorrect lifting or inadequate lifting capacity may result in personal injury or equipment damage. Do NOT lift an entire generator set by the lifting provisions provided on the alternator.

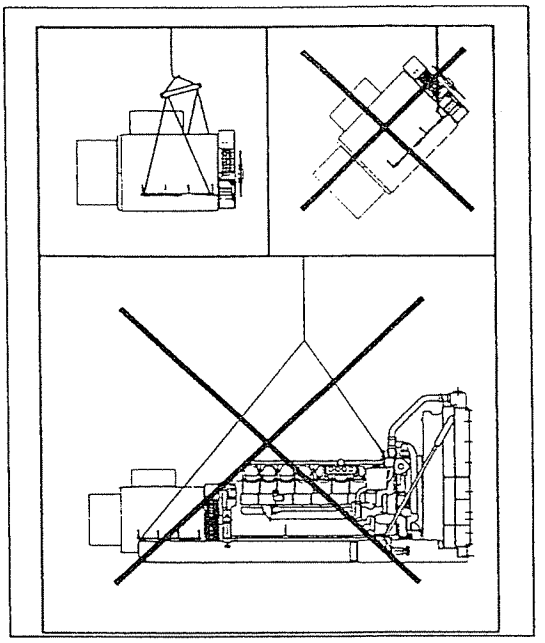

Single Bearing Mounting

All single bearing alternators are shipped with an SAE adaptor, which matches the engine's flywheel housing and SAE drive discs which match the engine's flywheel. Alignment is critical. If necessary shim the alternator feet to ensure alignment of the machined surfaces.

Alternator to Engine

Before assembly, make sure all mounting surfaces are clean.

Install two guide pins in the engine flywheel. Using a suitable hoist, position the alternator so the drive discs mate with the engine flywheel. Remove the guide pins and install mounting bolts and lock washers through the alternator drive discs into the engine flywheel. Torque bolts according to the torque specification. Also install bolts and lock washers through the adaptor into the flywheel housing.

Install mounting bolts to secure the alternator to the mounting base.

Install the fan guard screen.

CAUTION

Screen must be in place to prevent personal injury.

Output Connections

For proper alternator output connections, select the appropriate diagram with the correct number of leads and desired output voltage range. Be sure to connect all identically marked output leads together. Final adjustment of the alternators output voltage to the desired level is achieved with the regulator voltage LEVEL adjust rheostat.

Insulation Testing



CAUTION

Electronic parts, such as regulators, diodes, etc. will be damaged if a megohmmeter is applied across their terminals to ground.

The following procedure is recommended to check the alternator winding resistance to ground. A megohmmeter, designed for insulation resistance testing, using 500 VDC to test the winding should be used. The minimum acceptable resistance to ground for a new alternator is found as follows:

$$\text{Resistance} = \frac{\text{Connected Voltage}}{1000} + 1\text{Megohm}$$

Main Stator

Disconnect regulator sensing leads 20, 22 and 24 from the terminal block. With the output leads disconnected from the load or breaker, reconnect the output leads together. Measure the insulation resistance from any one of the output leads U1 (T1), V1 (T2) or W1 (T3) to ground with a megohmmeter. Make sure the regulator input leads (20, 22 and 24) and the main stator leads U1 (T1), V1 (T2) and W1 (T3) do not touch ground to prevent accidental grounding.

If the reading is below the minimum acceptable value for a new alternator, it is an indication of a dirty, wet or grounded winding. Clean the winding per preventative Maintenance and Cleaning Section and dry the winding per Moisture Removal Section. If after cleaning and drying, the winding resistance is still unacceptable, repair or replace the stator.

Main Rotor

Disconnect the two main rotor leads from the exciter diode assembly. Measure the resistance from one lead to ground (connect one lead of the megohmmeter to the shaft or internal fan). Make sure the main rotor leads do not touch any other part during this test. If the reading is below the minimum acceptable value for a new alternator, it is an indication of a dirty, wet or grounded winding. Clean the winding per Preventative Maintenance and Cleaning Section and dry the winding per Moisture Removal Section. If after cleaning and drying, the rotor resistance reading is still unacceptable, repair or replace the main rotor.

Exciter Stator

Disconnect the exciter stator input leads, F1 and F2, from the regulator. Measure the resistance from one input lead to ground with a megohmmeter. Make sure the input leads do not touch ground during this test. If the reading is below the minimum acceptable value for a new alternator, it is an indication of a dirty, wet or grounded winding. Clean the winding per Preventative and Maintenance and Cleaning Section and dry the winding per Moisture Removal Section. If after cleaning and drying, the winding resistance is still unacceptable, repair or replace the exciter stator.

Exciter Rotor

Disconnect all three exciter rotor leads from the exciter diode assembly. Verify the lead locations for proper reconnection. Using a megohmmeter measure the resistance from one lead to ground (connect the ground lead of the megohmmeter to the exciter diode bracket). Make sure none of the three exciter rotor leads touch ground during this test. If the reading is below the minimum acceptable value for a new alternator, it is an indication of a dirty, wet or grounded winding. Clean the winding per Preventative Maintenance and Cleaning Section and dry the winding per Moisture Removal Section. If after cleaning and drying, the winding resistance is still unacceptable, repair or replace the exciter rotor.

Moisture Removal

Alternators and generator sets which have been in storage and subject to variations in temperature and/or humidity, should be dried thoroughly before operation. The following methods are recommended:

Forced Heated Air

Forced heated air from a portable heater or some other suitable source can be used to dry an alternator. The heated air entering the alternator should not exceed 150°F (65.6°C) at the closest electrical winding. Drying can be accomplished by running the alternator at no load and with the regulator disconnected (no excitation) while directing the heated air into the exciter end of the alternator.

Space Heaters

If the alternator is supplied with space heaters, refer to the connection diagram on the inside side cover of the conduit box for instructions. Energize the space heaters and allow them to operate for 24 hours to insure proper drying.

Baking Oven

Note: All electronic parts, including the regulator, must be removed before baking. The alternator can be placed in a baking oven and dried. The temperature of the oven should not exceed 190°F (88°C).

Main Stator Short Circuit Method

WARNING

Personal injury, death and/or equipment damage may occur if these instructions are not followed.

First, disconnect the exciter stator leads F1 and F2 from the voltage regulator terminal strip. Next connect a DC power source (battery) to the F1 and F2 leads.

Note: Connect the positive (+) terminal to F1 and the negative (–) terminal to F2.

The DC source should be about 12 volts DC (an adjustable source is preferred). With the DC source in place short all three output leads U (L1), V (L2), W (L3) together. Start the alternator and bring it up to rated speed. Measure the short circuit current in each lead with a clamp on ammeter. The amp readings should be about 80% of the full load amp rating on the name plate. If the amp readings exceed the rating the DC source must be adjusted. After the alternator has run about an hour the winding resistance to ground should be measured using a megohmmeter. This procedure should be repeated every one to two hours until a consistent resistance reading is obtained. This reading must be equal to or greater than the following megohmmeter reading.

$$\text{Resistance} = \frac{\text{Connected Voltage}}{1000} + 1 \text{ Megohm}$$

After this procedure is complete, disconnect the DC source and reconnect F1 and F2 to the regulator terminal strip.

Note: If moisture removal is required then the alternator insulation should be completely tested using the method covered in Insulation Testing Section.

OPERATION

Pre-Operation Inspection

Before the initial operation of the generator set, a pre-operation inspection should be given. Recheck the output connections for correct connection and that all leads are insulated. Recheck the regulator connections for proper and tight connections. Visually inspect the alternator for any foreign material which must be removed (tools, shop rags, packing material, etc.). Make sure that all drip covers, screens and conduit box covers are in place and all bolts are tight. Check air intake, ventilation path and exhaust for obstructions.

Engine Warm-up/Cool Down

If your alternator is supplied with a MagneTek regulator, it has built in protective circuitry for some abnormal conditions. The regulator resets when input power to the regulator is interrupted for approximately one minute. If the generator set must run at low speed idle or other abnormal condition for extended time a relay or switch may be required. Close the relay or switch, allowing power to the regulator when normal operation begins.

Output Voltage Adjustment

The Voltage LEVEL Adjust is incorporated in the MagneTek regulator allowing for voltage adjustment. To adjust the output voltage, turn the adjustment with a screwdriver CW to increase the voltage and CCW to decrease the voltage.

Generator Set Start-up

Before starting the generator set read the automatic voltage regulator instructions and follow the steps outlined for proper regulator adjustment.

No Load Operation

1. Open the main circuit breaker to disconnect the alternator output leads from the load. Adjust the voltage regulator per the voltage regulator instructions.

2. Start the prime mover and bring it up to full load rated speed. If a voltage regulator switch is used, close the switch after the engine is warmed up and at rated speed, this will apply excitation. When this switch is not used, alternator voltage will build up automatically.

CAUTION

If a MagneTek regulator is not used, refer to the regulator manufacturers manual for correct start-up precautions, as damage may occur.

3. Adjust the output voltage per the voltage regulator instructions.

If any of the following conditions occur, stop the prime mover and refer to the troubleshooting section of the voltage regulator manual.

a. Overvoltage (+20% or more)

b. No voltage build up

c. Undervoltage (-25% or less)

d. Fluctuating voltage

Operation With Load

1. Apply the load to the alternator output leads by closing the circuit breaker.

2. Adjust the full load engine speed, 1800 RPM (60Hz) or 1500 RPM (50Hz) for four pole alternators.

3. Verify the voltage regulation is within ±1%. If it is not within these limits refer to the voltage regulator instructions.

4. Open the main circuit breaker to remove the load before stopping the prime mover.

Exciter Field Flashing (Self Excited Only)

The output voltage of the self excited alternator is initially produced by residual magnetism. Residual magnetism can be lost as a result of vibration or rough handling which may occur in shipping or storage. If the residual magnetism is lost no voltage will be produced and exciter field flashing is required. To flash the exciter field, shut the generator set down. Disconnect the exciter stator input leads F1 and F2 from the regulator terminal strip. Connect a 12 volt DC battery to the F1 and F2 exciter leads. The F1 lead must be connected to the positive (+) terminal and the F2 lead must be connected to the negative (-) terminal.

CAUTION

The correct connection must be made F1 to Positive (+) and F2 to Negative (-). If connections are reversed, the regulator could be damaged when the generator set is restarted.

This will remagnetize the exciter stator and will allow output voltage build-up when the generator set is restarted.

Katolight Service - Master Repair Manual - Page 634

SERVICE

Bearings

Sealed bearings are normally supplied for maintenance free operation. If excessive noise or vibration develops after a period of time this may be due to bearing wear. Replace the bearing if damaged, seals show sign of wear or loss of grease is observed.

If regreaseable bearings are supplied. Grease the bearings every 2000 hours of operation or every 12 months with 2 ounces of Chevron SRI #2 or compatible grease. Replace the bearings if excessive noise or vibration develops.

Anytime the alternator is disassembled the bearings should be checked for damage. It is recommended that the bearing be replaced during any major overhaul.

Windings

Winding condition can be checked using the insulation testing instructions found in the Installation Section of this manual.

Preventative Maintenance and Cleaning

Heat, moisture and airborne contaminants are the most common contributors to alternator problems. Alternator life can be extended if it is periodically checked for overloads, unbalanced loads, proper alignment, moisture and dirt build-up.

Overloads and unbalanced loads will cause overheating in the alternator. Overheating will cause insulation breakdown and eventual failure. These conditions must be corrected by redistributing the unbalanced load or removing the excess load.

Proper alignment between the alternator and the prime mover is critical for efficient vibration free operation. Vibration caused by misalignment can cause premature failure to both prime mover and alternator.

Dust, dirt and other airborne contaminants when allowed to accumulate will cause alternator failure. This type of contamination will cause insulation breakdown and overheating by restricting air flow. A build up of contaminants will also "blanket" the windings and other electronic components causing overheating. Some airborne contaminants will form a conductive path to ground which will cause failure.

Moisture by itself or in the presence of airborne contaminants will cause alternator failure by forming a conductive path to ground. If the alternator is operating in an area where airborne contaminants and/or moisture are present, the alternator should be cleaned and dried periodically.

Cleaning Methods

When alternators are stored and/or operate in an area where contaminants are present in the air, they should be cleaned periodically. To clean the alternator, disassemble and follow one of the following procedures. After cleaning the alternator, it should be dried (See moisture removal section) and tested (See insulation testing section) before being put back into service.

Dry Surface Dirt

Dry surface dirt can be removed with a dry soft cloth and/or with dry compressed air. If the dirty areas are accessible, a dry soft cloth can be used to remove the dirt. If the areas are not accessible or if the cloth is not effective in removing the dirt, dry compressed air can be used (air pressure should not exceed 30 PSI).

CAUTION

Protective goggles and dust mask should be worn when using compressed air to remove dust or dirt from inside the alternator. Compressed air or dry cloth should not be used when contaminants are extremely abrasive, like metal dust or metal chips.

Dry or Loose Dirt

Dry, loose, or abrasive dirt in hard to reach areas can be removed by brushing the dirt free and then vacuuming it out of the alternator. Do not use a metal bristle brush. It may cause insulation damage.

Hard Dirt Deposits

Hard dirt deposits can be removed from the winding by using walnut shells(I2 - 20 mesh) as a mild abrasive with compressed air and shell blasting the winding. After shell blasting, vacuum the winding and inside of the alternator clean.

Oily or Greasy Dirt

Oily or greasy dirt can be removed by using a solvent and soft cloth. The only recommended solvents to be used are Chlorothene or Naphtha (mineral spirits).

WARNING

Using any solvent other than the ones recommended may cause insulation deterioration and will void any warranty.

After cleaning the windings and/or electronic components dry with low pressure, moisture free compressed air.

WARNING

When using solvent read the Manufacturer's instructions for proper use. Protective gloves should be worn. Only use in an area with adequate ventilation. Do not breathe vapors. Do not use around open flame. Failure to follow these instructions may cause personal injury or death.

Disassembly / Inspection

Alternator from Engine

Warning

Personal injury, death or equipment damage may occur if all instructions are not followed.

1. Disconnect all power from the generator set before proceeding.
2. Remove terminal box access cover.
3. Disconnect all load leads from the alternator output leads or the bus bars. Also disconnect any conduit or lead ducts attached to the terminal box.
4. Before removal from the prime mover, position the main rotor, if possible, such that a full pole face is at the bottom center.

Warning

To rotate rotor, do not bar the fan as this may result in equipment damage or personal injury.

5. Carefully check that there are no connections, leads or guards that will interfere with the removal of the alternator. Uncouple and remove any such obstructions.
6. Attach a suitable overhead hoist to the genset and adjust hoist to remove all slack from the lifting chain/sling.
7. Lift the genset high enough to place a reinforcement block between the engine flywheel housing and base thereby supporting the engine.

Warning

Insure the engine fan does not hit the radiator or radiator shroud.

8. Remove the drip cover (if specified) and screen assembly from the alternator.
9. Place polypropylene strips or similar material between pole faces and stator laminations to minimize contact and damage.
10. Support the alternator rotor with a suitable sling.
11. Remove the bolts holding the drive discs and the flywheel together and the bolts holding the alternator SAE adapter to the flywheel housing. Separate the alternator from the engine.

Rectifier / Heatsink Assembly

1. With the exciter cover removed, locate and disconnect all terminals on the rectifier / heatsink assemblies.
2. Using an ohmmeter, measure the resistance between one of the AC terminals (1,2,3) and the (-) terminal on the negative (-) rectifier/heatsink assembly. Make sure the heatsink is not grounded. Note the resistance reading and reverse the ohmmeter probes. Note the second resistance reading. One of these resistance readings should be high and one should be low. Repeat this procedure with the other two AC terminals and the (-) terminal on the negative (-) rectifier/heatsink assembly. Replace the rectifier/heatsink assembly if defective.
3. Repeat the above procedure with each of the 3 AC terminals and the (+) terminal on the positive (+) rectifier/heatsink assemble.
4. Using an ohmmeter, measure the resistance between terminals of each varistor with the varistors disconnected. The resistance should be high. Typically a failed varistor shows visible signs of stress.

Exciter Assembly

1. Disconnect exciter leads from the regulator inside the terminal box.
2. Locate and remove the four bolts in the end of the shaft that hold the spacer/washer. Remove the spacer/washer.
3. With the spacer/washer removed slide the exciter rotor off the shaft.
4. Remove the four bolts that hold the exciter stator to the bearing bracket. Mark the location of the exciter for reassembly and remove the exciter stator.

Exciter Assembly Inspection

Inspect the exciter stator and rotor windings. Check for any cuts, scrapes, loose, frayed or burnt windings or damaged leads. Check the windings for open or grounded circuits.

Permanent Magnet Exciter Assembly

1. Disconnect PM leads from the regulator inside the terminal box.
2. Slide the PM rotor assembly off the shaft. The highly magnetic rotor will attract the stator. Avoid contact between the rotor and stator that could damage the windings.
3. Remove the bolts that hold the PM stator to the bearing bracket. Mark the location of the PM stator for reassembly. Remove the PM stator.

Katolight Service - Master Repair Manual - Page 636

Permanent Magnet Exciter Inspection

1. Inspect the PM stator windings and leads for any cuts, scrapes, loose frayed or burnt windings. Check the windings for open or grounded circuits.
2. Check the PM rotor assembly for broken, damaged or loose magnets. The rotor assembly must not be dismantled.

Bearing Bracket

1. Support the bearing bracket by using a sling attached through the openings in the bracket.
2. Remove the bearing retainer bolts and bearing retainers.
3. Remove the bearing bracket bolts and washers.
4. Remove the bearing bracket by inserting jackscrews into the jackscrew holes. Alternate the tightening of the jackscrews ¼ to ½ turn at a time so the bracket comes off slowly and evenly. Do not allow the main rotor to drop onto the main stator.

Bracket Inspection

1. With the bracket removed, clean the bracket bearing cavity.
2. Check the bracket for cracks and rough spots on the machined surfaces. Check the bearing bore for rough spots, burrs, rust and excessive wear. Replace the bracket if found defective.

Bearing Inspection

1. With the bearing bracket removed and the bearing on the shaft, check for damage or wear.
2. If the bearing needs to be replaced, remove the bearing using a suitable bearing puller.

Main Rotor Assembly

CAUTION

At all times caution should be used to prevent damage to the shaft bearing surfaces and other closely machined shaft fits. Care should be taken to avoid contact between the rotor and stator. Do not damage the windings. The rotor should be rested on some form of blocking once removed form the stator. Do not rest lifting devices on windings or laminations.

1. With the rectifier, permanent magnet exciter, main exciter and bearing bracket removed locate and remove the flexible drive discs.
2. Locate a rotor support tool or heavy gauge pipe on the exciter end shaft extension. Using suitable slings at the rotor support tool and drive hub, ease the rotor out the drive end of the stator until at least half of the rotor core is protruding out of the stator. Support the drive end so the sling and rotor support tool can be removed.
3. Using a suitable sling around the rotor core and supporting the drive end ease the rotor clear of the stator.

Fan Inspection

1. Visually inspect the cooling fan for cracked, deformed or broken fan blades. If any of these conditions exist, replace the fan..

Main Stator

1. With the alternator disassembled clean the main stator windings if necessary.
2. Inspect the main stator winding and output leads for any cuts, scrapes, and loose, frayed or burnt windings.
3. Check the main stator winding for open or grounded circuits.
4. Inspect all machined surfaces for rough spots, rust or burrs. Also check the frame assembly for cracks, dents or other damage.

Assembly

Note: *All bolts and nuts must be torqued according to the torque values given in the torque specifications. Loctite 242 must be used in the assembly of all bolts, nuts and screws except electrical fasteners.*

Bearings

1. Bearings must be mounted on rotor shaft prior to rotor assembly into the stator.
2. Heat the bearings prior to installation onto the shaft to a maximum temperature of 212°F (100°C) preferably with a bearing induction heater.

Caution:

Do not overheat the bearing. Damage may occur which will shorten the bearing life.

Main Rotor

1. Before assembly, be sure the main rotor and stator assemblies are clean.
2. Use a rotor support tool and suitable hoist/sling to lift and support the rotor assembly.
3. Slowly insert the rotor assembly bearing end first, until the rotor and stator laminations line up. Position the main rotor, if possible, such that a full pole face is at the bottom center.

Bearing Bracket

1. Allow bearing to cool to room temperature.
2. Install guide pins into the bearing bracket boltholes in the main stator.
3. Support the bearing bracket by using a sling attached through the bracket openings.
4. Apply a film of grease to the surface of the bearing bore and shaft hole to aid in assembly, prevent corrosion and help seal out contaminants after assembly.
5. With non-sealed bearings the bearing cavity should be approximately 40% filled with grease.

6. Slowly ease the bracket into place until the bearing rests inside the bearing cavity.
7. Install bearing retainers.
8. Bolt the bearing bracket to the main stator assembly.

Permanent Magnet Exciter Assembly

1. Attach the PM stator to the bearing bracket.
2. Place the main rotor leads in the shaft slot.
3. Carefully slide the PM rotor onto the shaft. Avoid contact between the rotor and stator that could damage the windings or the permanent magnets.
4. Connect the PM stator leads to the voltage regulator.

Exciter Assembly

1. Assemble the exciter stator to the bearing bracket with four retaining bolts and washers.
2. Connect the exciter stator leads to the voltage regulator.
3. Place the revolving field leads in the shaft slot.
4. Slide the exciter rotor assembly onto the shaft.
5. Route the main rotor leads through the spacer/washer.
6. Attach the exciter rotor assembly using the spacer/washer and four retaining bolts to the end of the shaft.

Rectifier / Heatsink Assembly

1. Assemble the rectifier/heatsinks to the exciter rotor. Make sure heatsinks are not grounded.
2. Connect one set of exciter rotor leads to the AC terminals on the positive (+) rectifier/heatsink and one set to the negative (-) rectifier/heatsink. Phase sequence is not a consideration.
3. Connect the main rotor leads to the (+) and (-) terminals on the rectifier/heatsinks. Polarity is not a consideration.

Regulator / Accessories

1. Reconnect automatic voltage regulator, regulator ground lead, exciters, temperature detectors and accessories.
2. Use cable ties to secure all leads out of the way and away from all rotating parts.

Alternator to Engine

1. Before assembly, make sure all mounting surfaces are clean.
2. Attach flexible drive discs to coupling hub.
3. Install guide pins in the engine flywheel. Using a suitable hoist, position the alternator so the drive discs mate with the engine flywheel. Remove the guide pins and install the mounting bolts and lockwashers through the drive discs into the engine flywheel. Torque bolts according to the torque specifications.
4. Install bolts and lock washers through the adapter into the flywheel housing.
5. Install mounting bolts to secure the alternator to the mounting base.

Terminal Box

1. Reconnect power leads.
2. Use cable ties to secure all leads out of the way and away form all rotating parts. Secure leads to prevent abrasive wear due to vibration.
3. Reconnect any conduit or lead ducts to the terminal box.

Covers and Screens

1. Install all access covers, screens and drip covers.

Caution

All access covers and screens must be in place to prevent personal injury and equipment damage.

Recommended Spare Parts

The following are recommended spare parts. For critical applications a set of these service replacement parts should be kept with the alternator.

1. Rectifier assembly kit.
2. Automatic voltage regulator.
3. Bearing.

When ordering replacement parts the alternator serial number and nameplate information along with the part description should be given. Refer to the alternator cut-a-way drawing in the back of this manual for replacement parts identification.

SAE Bolt Markings

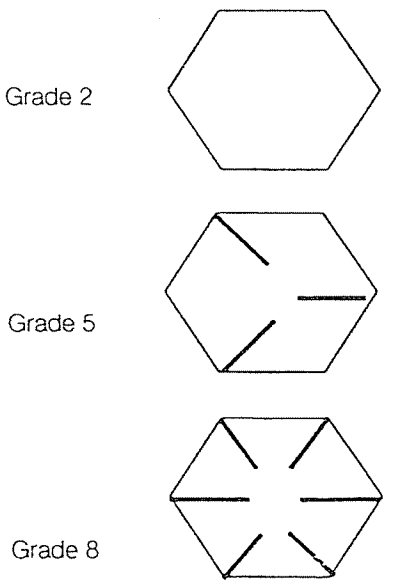

Katolight Service - Master Repair Manual - Page 638

Torque Specification

Metric Bolt Markings

Class 8.8

Screw Size	N-M Min	N-M Max	Lb-Ft Min	Lb-Ft Max
M6	9.3	10.2	6.8	7.6
M8	20	22	15	16
M10	40	44	29	32
M12	69	76	51	56
M14	110	122	81	90
M16	172	190	127	140

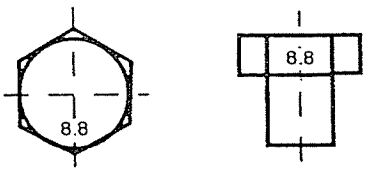

Class 8.8

Class 10.9

Screw Size	N-M Min	N-M Max	Lb-Ft Min	Lb-Ft Max
M6	13.9	15.4	10.3	11.3
M8	30	33	22	24
M10	60	66	44	49
M12	104	115	77	85
M14	165	183	122	135
M16	258	285	190	210

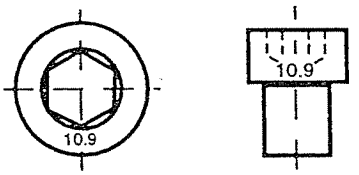

Class 10.9

SAE Grade 5

Bolt Size	Inch-Lbs. Min.	Inch-Lbs. Max.	Foot-Lbs. Min.	Foot-Lbs. Max.
4-40	5.0	7.2		
6-32	10.0	14.4		
8-32	19.0	26.4		
10-32	31.0	43.2		
1/4-20	66.0	90.0	5.5	7.5
5/16-18	132.0	187.2	11.0	15.6
3/8-16	240.0	331.2	20.0	27.6
7/16-14	420.0	576.0	35.0	48.0
1/2-13	600.0	792.0	50.0	66.0
9/16-12			65.0	96.0
5/8-11			90.0	132.0
3/4-10			160.0	240.0
7/8-9			200.0	360.0
1.0-8			220.0	528.0

SAE Grade 8

Bolt Size	Inch-Lbs. Min.	Inch-Lbs. Max.	Foot-Lbs. Min.	Foot-Lbs. Max.
4-40				
6-32				
8-32				
10-32				
1/4-20	72.0	144.0	6.0	12.0
5/16-18	156.0	276.0	13.0	23.0
3/8-16	324.0	444.0	27.0	37.0
7/16-14	480.0	720.0	40.0	60.0
1/2-13	780.0	1020.0	65.0	85.0
9/16-12			95.0	125.0
5/8-11			130.0	170.0
3/4-10			230.0	300.0
7/8-9			360.0	480.0
1.0-8			560.0	720.0

Locktite 242 must be used on all bolts, nuts and screws during assembly.

6 Lead Connection

WYE

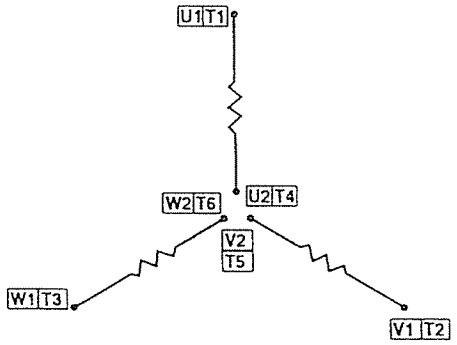

Voltage Range		Frequency	Internal Connections	Output Connections			
Line to Line	Line to Neutral			U	V	W	N
380-480V	220-277V	60	U2-V2-W2	U1	V1	W1	U2-V2-W2
380-416V	220-240V	50					
450-600V	260-346V	50					
2400V	1386V	60					
4160V	2400V	60					
3300V	1905V	50					

DELTA

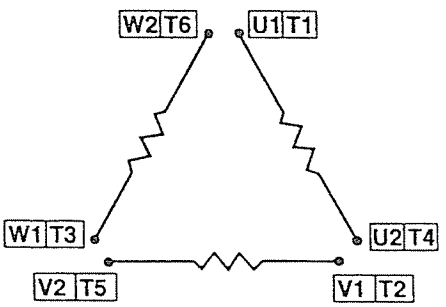

Voltage Range		Frequency	Internal Connections			Output Connections			
Line to Line	Line to Neutral					U	V	W	N
240-270V		60	U1-W2	V1-U2	W1-V2	U1-W2	V1-U2	W1-V2	NONE
220-240V		50							
2400V		60							

ALTERNATOR TERMINAL MARKINGS

IEC	NEMA
U1	T1
V1	T2
W1	T3
U2	T4
V2	T5
W2	T6
U	L1
V	L2
W	L3
N	L0

Rectifier Varistor Schematic

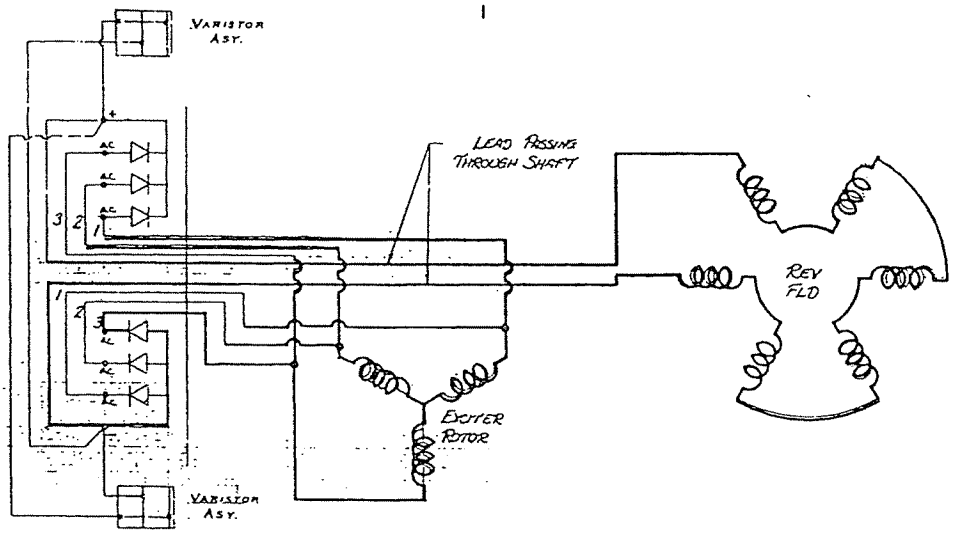

Rectifier Varistor Assembly

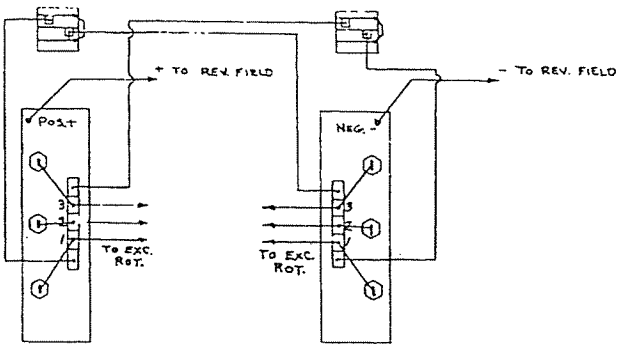

Differential Pressure Switch

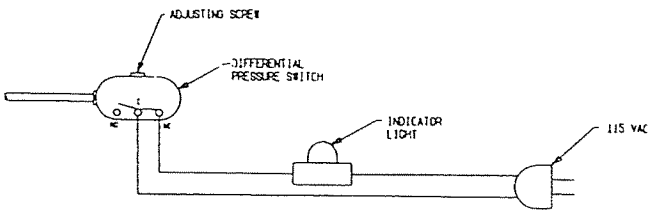

Options

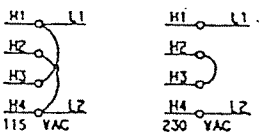

Space Heaters

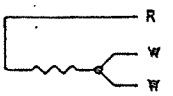

Resistance Temperature Detectors

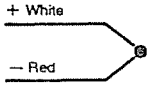

Thermocouple

PARTS IDENTIFICATION

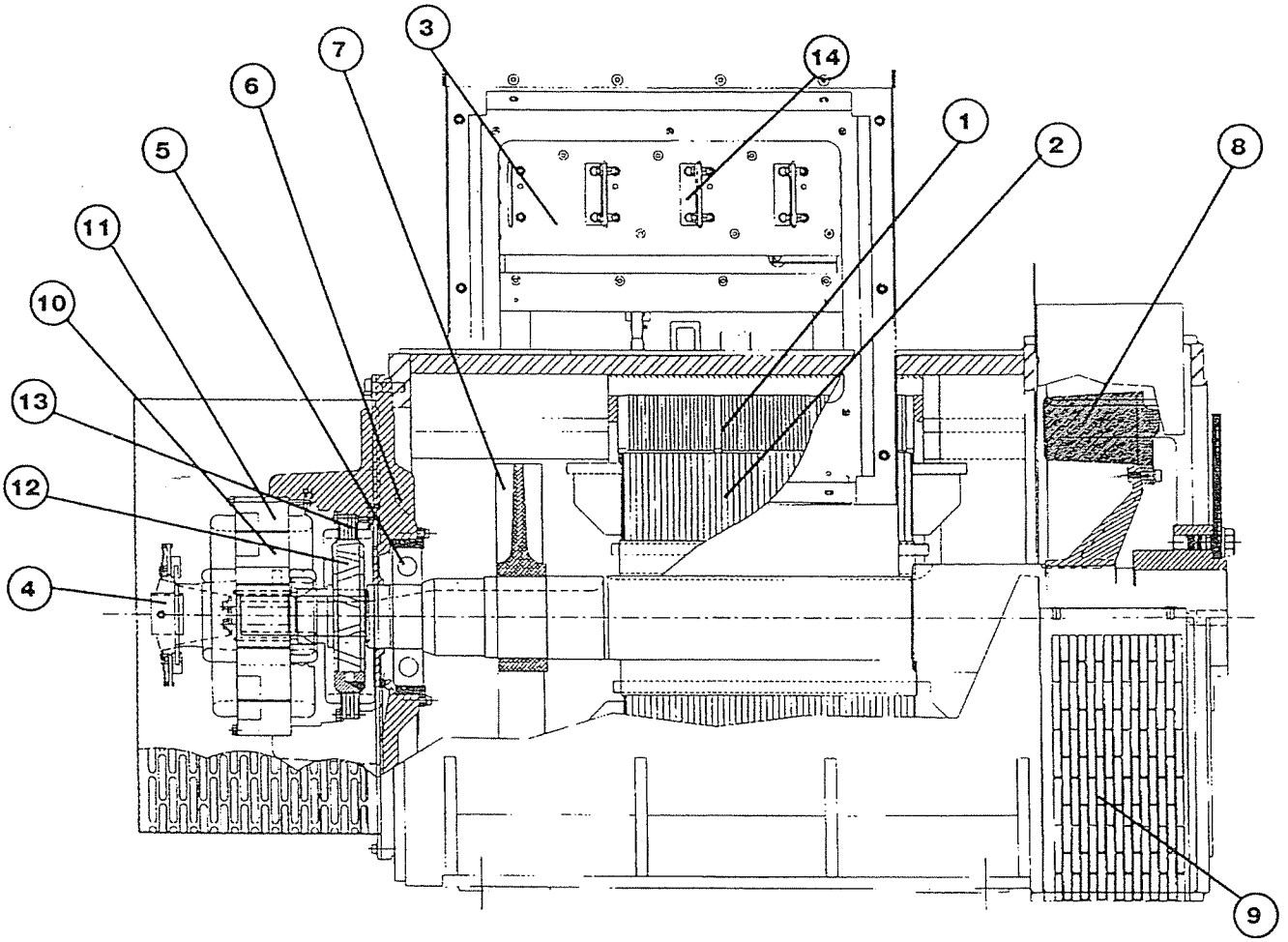

1. Stator/frame assembly
2. Revolving field assembly
3. Automatic voltage regulator
4. Rectifier/Heatsink assembly
5. Bearing
6. Bearing bracket
7. Auxiliary Fan
8. Vent fan
9. Exhaust screen assembly
10. Exciter rotor
11. Exciter stator
12. PMG rotor
13. PMG stator
14. Bus bar assembly



P.O. Box 8447
Mankato, MN, USA 56002-8447
Phone: (507) 625-4011
Fax: (507) 345-2798
www.kato-eng.com
E-mail: katoengineering@lsusa

Manual #62047002
Rev. 2 OD 4/02

Publication 350-01001-00, 10/02/04

Instruction Manual

Installation • Operation • Maintenance

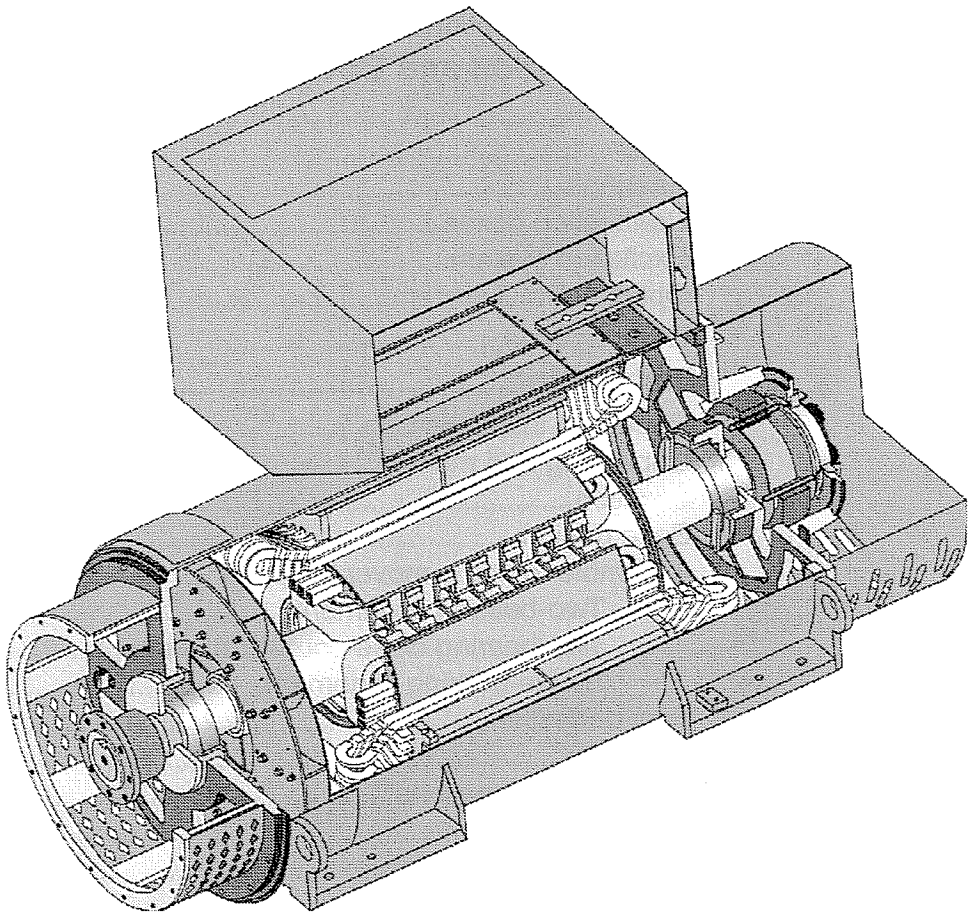

Standard ac generator

Single or two-bearing
Drive-end air discharge

KATO Engineering Inc.
Leroy Somer North America

Kato Engineering Inc.
P.O. Box 8447
Mankato, MN USA
56002-8447
Tel: 507-625-4011
Fax: 507-345-2798
Email: katoengineering@lsusa.com
www.kato-eng.com

Table of Contents

Introduction.....4
Forward.....4
Safety instructions.....4
Ratings/description.....4
Construction and Operating Principles.....5
Stator.....5
Rotor.....5
Bearings.....5
Connection boxes.....6
Excitation system.....6
Optional PMG system.....7
Other options.....7
Installation.....8
Receiving inspection.....8
Unpacking and moving.....8
Location.....8
Base design.....8
Assemble to prime mover, alignment.....8
Two-bearing alignment.....9
Two-bearing close-coupled alignment.....11
Single-bearing alignment.....16
Foot deflection.....21
Doweling.....21
Electrical connections.....21
Space heaters.....21
Inspection before startup.....22
Operation.....23
Initial startup: generators w/auto & manual control.....23
Initial startup: generators w/auto control only.....23
Restoring residual magnetism/field flashing.....24
Continuous operation.....25
Idling.....26
Parallel operation.....26

Note: *Because of rapid changes in designs and processes and the variability of Kato Engineering's products, information in this manual must not be regarded as binding and is subject to change without notice.*

The image on the front cover is representative only. Several variations are available within the range of generators covered within this manual.

Maintenance.....28
Schedules.....28
Maintenance procedures.....30
Visual inspection methods of windings.....30
Cleaning.....31
Insulation resistance tests at low voltage.....32
Dry out procedures.....34
Bearing lubrication.....34
Rectifier tests.....35
Disassembly.....37
Overall disassembly.....37
Exciter armature and PMG removal.....38
Bearing removal.....40
Assembly.....40
Bearing installation.....40
Overall assembly.....41
Exciter armature and PMG installation.....41
Storage.....42
Troubleshooting.....43
Appendices.....46
List of equipment required for installation and maintenance.....46
Main part location.....47

Introduction

Forward

This manual contains instructions for installing, operating and maintaining Kato Engineering ac brushless revolving field generators. These generators are manufactured in many sizes and ratings and with various options.

Lubrication information, electrical connection drawings, dimensional drawings and parts listings for your model are contained in the manual package as supplementary information and are the specific source of information for making connections and ordering replacement parts. Information about optional components of your generator may also be contained as a supplement.

Please read this manual in its entirety before unpacking, installing, and operating your generator.

Safety instructions

In order to prevent injury or equipment damage, everyone involved in installation, operating and maintenance of the generator described in this manual must be qualified and informed of the current safety standards that govern his or her work.

While "common-sense" prevention of injury or equipment damage cannot be completely defined by any manual (nor built into any piece of equipment), the following paragraphs define warnings, cautions, and notes as they are used in this manual:

Warning: Warnings identify an installation, operating or maintenance procedure, practice, condition, or statement that, if not strictly followed, could result in death or serious injury to personnel.

Caution: Cautions identify an installation, operating or maintenance procedure, practice, condition, or statement that, if not strictly followed, could result in destruction of or damage to equipment or serious impairment of system operation.

Note: Notes highlight an installation, operating or maintenance procedure, condition, or statement and are essential or helpful but are not of known hazardous nature as indicated by warnings and cautions.

Ratings/description

Nameplates, which are located on the side of the generator, include serial and model number as well as rating information and bearing and lubrication information.

Construction and operating principles

Stator

The stator consists of the supporting frame, core, and armature windings.

The stator core is made from laminations, thin sheets of electrical steel that are stacked and held in place by steel endrings and support bars. The rings and bars are welded to or are part of the steel frame. Base mounting plates are welded to the bottom of the frame. The base mounting plates allow the assembly to be mounted on the genset base.

The windings (coils) are constructed of layered and insulated copper wire. The coils are inserted in the core slots, connected together, and the entire assembly is vacuum-pressure impregnated with resin. Stator leads terminate in standard connection lug or strap terminals for ease of connection to the load.

Rotor

The main rotor assembly is the rotating field. It consists of windings in a core, which is in turn mounted on a steel shaft. The exciter armature assembly and optional permanent magnet generator (PMG) rotor are also mounted on the shaft as are the fan(s) and other optional accessories. The core consists of laminations, thin sheets of electrical steel, which are stacked together. The core makes the salient poles (four, six, eight or 10). With six or more poles, the poles are typically attached to a center hub.

The rotor windings consists of insulated magnet wire wound around each pole. V-blocks between each pole keep the rotor windings in place. Damper windings consist of copper or aluminum rods that are inserted through each pole surface and are brazed to copper or aluminum damper end plates at each end of the lamination stack. The end plates are brazed to adjacent poles to form a continuous damper winding. The ends of the windings are supported with bars or aluminum pole shoes. The rotor either has resin applied during the winding process or is vacuum-pressure impregnated with resin.

The shaft is made from high-strength rolled or forged steel and machined to accommodate all the rotating generator components. Keyways in the shaft ensure precise positioning of the rotor, exciter armature, and PMG rotor as well as drive couplings. On the exciter side, the shaft has a slot or hole in its centerline for running the rotor leads from the rectifier to the main rotor windings.

Bearings

The generator may contain one or two bearings. Bearings are typically ball or roller type and are either 1) heavy duty double shielded bearings, which are typically used on smaller generators and are greased for life or 2) regreaseable bearings, which contain fill and drain ports for

easy lubrication. Sleeve bearings are optional on some designs. A supplementary instruction will be included in the manual package for sleeve bearings if they are applicable to this generator.

Connection boxes

The main lead connection box houses the load lead terminals. In addition, the generator may have auxiliary connection boxes for connecting temperature detector outputs, space heater connectors, and sensing outputs.

Excitation system

The excitation system consists of the exciter stator assembly and the exciter armature assembly:

The exciter stator assembly consists of windings in a core. The core is made from steel laminations that are stacked and welded together. The main exciter stator coils are placed in slots in the core and form alternate negative and positive poles. The entire assembly is either mounted to the end bracket or mounted in a frame, which is mounted to the end bracket. The stator is a stationary field, which is powered by the voltage regulator.

The exciter armature assembly is keyed onto the generator shaft. The assembly consists of two subassemblies: the exciter armature and the rotating rectifier. The exciter armature assembly contains steel laminations that are stacked and keyed on the shaft or on to a sleeve. (The exciter sleeve is keyed to the generator shaft.) A three-phase winding is inserted into slots in the laminations. The coils are held in place by insulating wedges. The coil extensions are braced with tape. Output leads from the winding are connected to the rotating rectifier assembly.

The rotating rectifier is a three-phase full wave bridge rectifier, converting the ac from the exciter armature to dc, which is transferred to the main rotor windings. Two aluminum steel plates, each containing three rotating rectifier diodes, are mounted on each side of an insulating hub to form the negative and positive terminals. The plates also act as heat sinks for the diodes.

Excitation system functional overview: Exciter field control is established by the strength of the exciter field current developed by the voltage regulator system. The dc voltage and current levels of the exciter field signal from the voltage regulator varies depending upon the generator output voltage and the loading of the output lines (see Figure 1).

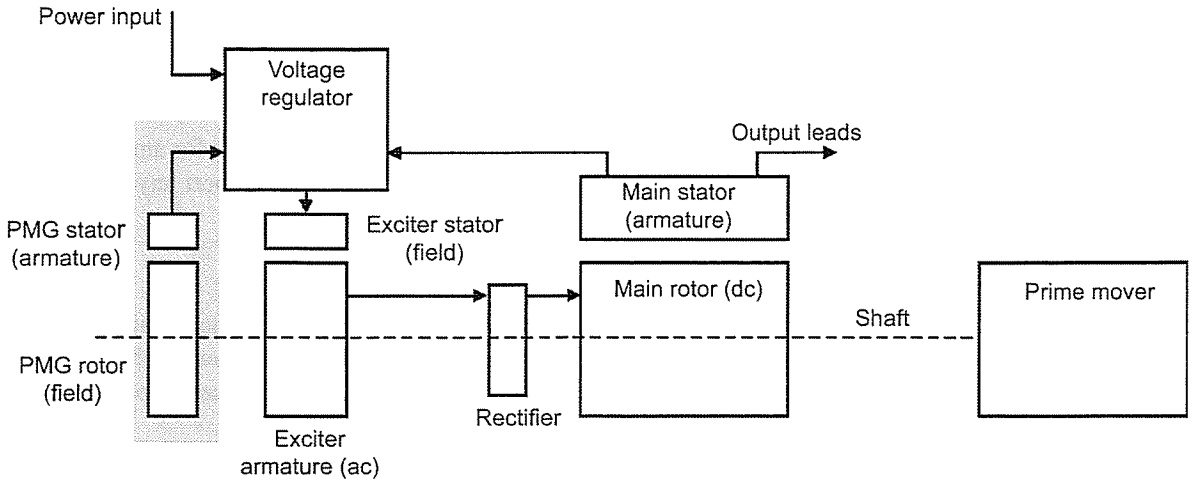

Figure 1: Overview of excitation system (with an optional PMG)

Optional PMG system

The permanent magnet generator (PMG) system consists of the PMG stator and PMG rotor:

The PMG stator is a stationary armature and is located within the stator assembly that also contains the exciter stator or is a separate stator mounted next to the exciter stator. The PMG stator consists of steel laminations. The laminations are held in place by steel compression rings and are welded to the frame bars of the exciter-PMG frame. The PMG windings are placed in slots in the laminations. Insulating wedges are inserted at the top of each slot to hold the coils in position.

The PMG rotor consists of rectangular permanent magnets and cast pole tips secured to a steel hub with nonmagnetic stainless steel bolts. The PMG rotor is keyed to the shaft and secured with a nut and lock washer.

PMG system overview: The PMG system functions as a pilot exciter, providing power to the automatic voltage regulator power supply. The PMG is an ac generator that uses permanent magnets in the rotor instead of electromagnets to provide the magnetic field (see Figure 1).

Other options

Other options include, but are not limited to, space heaters, filters, and temperature sensing devices.

Installation

Warning: *Be alert at all times when installing, operating and maintaining the generator. Avoid contact with the uninsulated metal parts of the generator. Most casualties occur from faulty ground connections on portable electrical equipment and failure to ground stationary equipment.*

Test all portable devices frequently to prove that a solid electrical circuit exits from the metal frame though the grounding conductor, in the electrical cord, to the grounding contact in the attachment plug. Do not use electrical equipment with frayed, burned or damaged cords. Always take extreme care when moving the generator. Be careful to not strike objects or personnel.

Apply lifting force to structural points specifically provided for lifting. Do not use the enclosure lifting holes to lift the whole unit. Use lifting means adequate to the weight. Observe lifting notices attached to the generator. Failure to observe these instruction can result in injury and damage to the generator.

Caution: *Do not attempt to transport a single-bearing generator without maintaining proper rotor support and with the exciter rotor assembly removed. Failure to observe this warning can result in equipment damage.*

Caution: *Blocking or restriction of normal air flow into or out of the generator may cause damage to the electrical windings.*

Receiving inspection

Before accepting a shipment, examine the packaging for any sign of damage that might have occurred during transit. Report any damage to the transportation company and Kato Engineering.

Unpacking and moving

If the generator is received during cold weather, reduce condensation on cold surfaces and failure due to wet windings by allowing the generator to reach room temperature before removing the protective packing.

Unpack the generator carefully to avoid scratching painted surfaces. Do not remove the protecting lubricant from the shaft end or dive plates. Inspect for loosely mounted components and the presence of moisture. Inspect to make certain foreign material such as crating nails, loose bolts or packing material, which may have fallen into the machine during unpacking, are removed. If damage is noted, determine the extent of damage and immediately notify the transportation company claims office and Kato Engineering. Be sure to give complete and accurate details when reporting damage.

Move the generator by attaching an overhead hoist to the eyebolts installed on the generator frame or by lifting the generator from underneath the skid with a forklift.

Single-bearing generators are shipped with the exciter rotor assembly removed from the shaft and a support mounted across the drive disc to support the rotor.

Location

Locate the generator in an area so it complies with all local and industrial regulations. Locate it in a clean, dry, well-vented area or area that is suitable for the generator enclosure. Make sure it is easily accessible for inspection and maintenance.

Protect generators operating intermittently in very damp locations with space heaters. Slowly warm generators placed in operation after being subjected to very low temperatures to prevent excessive condensation. Check winding resistance before placing the generator in operation (see instructions below).

Base design

The type of base to be used will depend upon the nature of the installation site. However, the generator base must be rigid, level, and free from vibration. Mounting holes must be larger than the fasteners to allow for alignment.

Assemble to prime mover, alignment

Follow either the two-bearing alignment (if your generator model has two bearings but no adapter to bolt to an engine flywheel housing), two-bearing close-coupled alignment (if your generator model has two bearings and an adapter for bolting to a flywheel housing), or single-bearing alignment (if your generator has one bearing and drive plates). Consult the factory for belt or gear drive alignment).

Two-bearing alignment

Follow the tolerances specified by the coupling manufacturer when they are less than described in this manual.

Use shims, if necessary, between the mounting pad and the base to properly level and align the generator to the prime mover.

Install the coupling(s) on the generator and engine drive shafts in accordance with their installation procedures. Use a straight edge and a thickness gauge for rough alignment as shown in Figure 2. Check for angular and parallel alignment as follows:

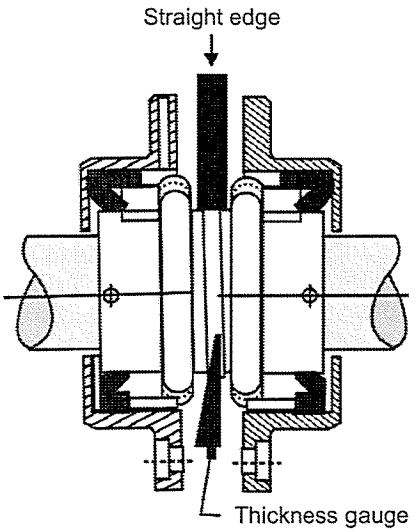

Figure 2: Rough alignment

Angular alignment: Fasten a dial indicator to one of the coupling halves, and scribe the position of the dial button on the face of the opposite coupling half as shown in Figure 3. Rotate both shafts simultaneously, keeping the finger or button on the indicator at the reference mark on the coupling hub. Note the reading on the indicator dial at each one quarter revolution.

A variation of readings at different positions will indicate how the machine needs to be adjusted to obtain a maximum misalignment of 0.001 inch for each inch of the coupling hub's radius, total indicator runout. Place or remove slotted shims from under the front or rear engine or generator mounting pads and/or shift the front or back half of one component from side to side until the components are properly aligned. Tighten the mounting bolts, and recheck alignment.

Notes: *Mounting of the indicators must allow complete rotation of the prime mover.*

Use dial indicators that are rigid so indicator sag won't be a factor. Using the shortest offset distance of the indicator bracket will reduce the effects of indicator droop or sag.

During alignment, you may also need to compensate for engine expansion due to heating. Generator expansion is generally not considered a factor.

If the genset is moved to a different location, check alignment before startup.

Caution: *Do not pry on the generator fan.*

Caution: *Generators equipped with sleeve oil bearings must have oil added to the bearing prior to rotation. See the bearing manual.*

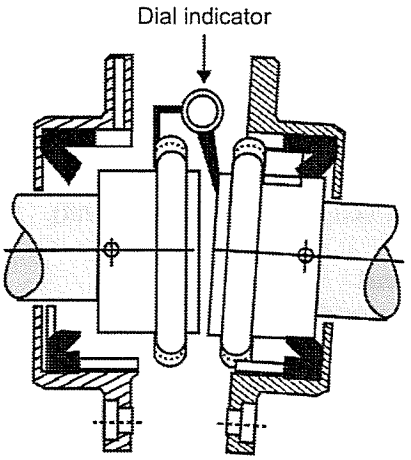

Figure 3: Angular alignment

Parallel alignment: Fasten a dial indicator to one of the coupling halves, and scribe the position of the dial button on the top of the opposite coupling half as shown in Figure 4. Rotate both shafts simultaneously, keeping the finger or button on the indicator at the reference mark on the coupling hub. Note the reading on the indicator dial at each one quarter revolution. A variation of readings at different positions will indicate how the machine needs to be adjusted to obtain a maximum misalignment of 0.002 inch. Place or remove slotted shims from under all of the engine or generator mounting pads and/or shift one component from side to side until the components are properly aligned. Tighten the mounting bolts, and recheck alignment.

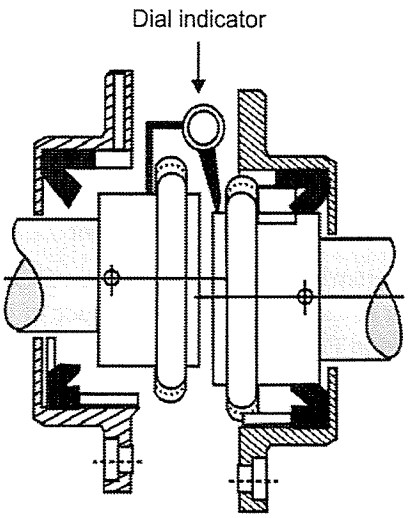

Figure 4: Parallel alignment

Two-bearing close-coupled alignment

Check the engine flywheel housing pilot's radial and face runout by mounting a dial indicator and measuring the flywheel to the flywheel housing as shown in Figure 5. See Table 1 for maximum allowable runout.

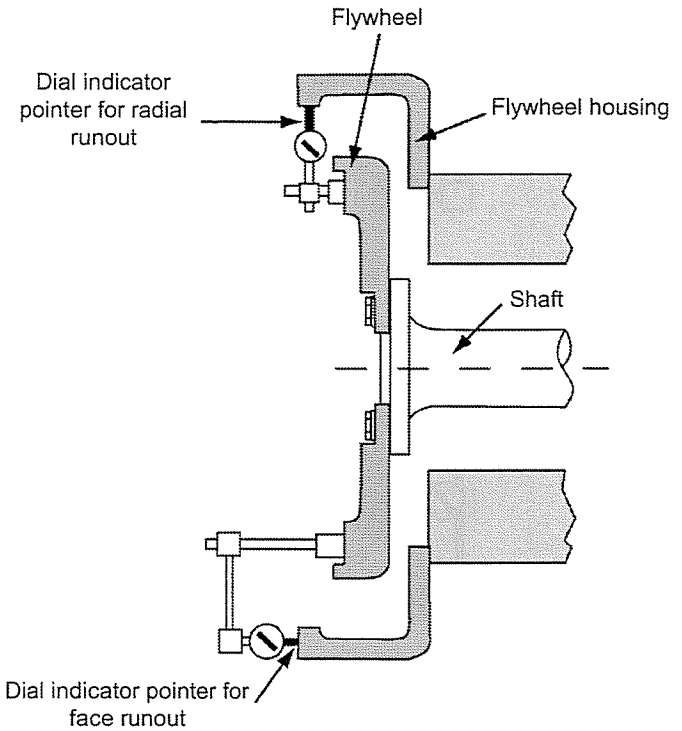

Figure 5: Flywheel housing check

SAE housing number	Housing inside dia.	Allowable runout (TIR)
6	10.500	0.002
5	12.375	0.003
4	14.250	0.003
3	16.125	0.004
2	17.625	0.004
1	20.125	0.005
0.5	23.000	0.005
0	25.500	0.006
00	31.000	0.007

Table 1: Maximum allowable flywheel housing runout (inches)

Notes: *Mounting of the indicators must allow complete rotation of the prime mover.*

Use dial indicators that are rigid so indicator sag won't be a factor. Using the shortest offset distance of the indicator bracket will reduce the effects of indicator droop or sag.

During alignment, you may also need to compensate for engine expansion due to heating. Generator expansion is generally not considered a factor.

If the genset is moved to a different location, check alignment before startup.

Caution: *Do not pry on the fan.*

Caution: *Generators equipped with sleeve oil bearings must have oil added to the bearing prior to rotation. See the bearing manual.*

Check the engine flywheel's radial and face runout by mounting a dial indicator and measuring the flywheel housing to the flywheel as shown in Figure 6. See Table 2 for maximum allowable runout.

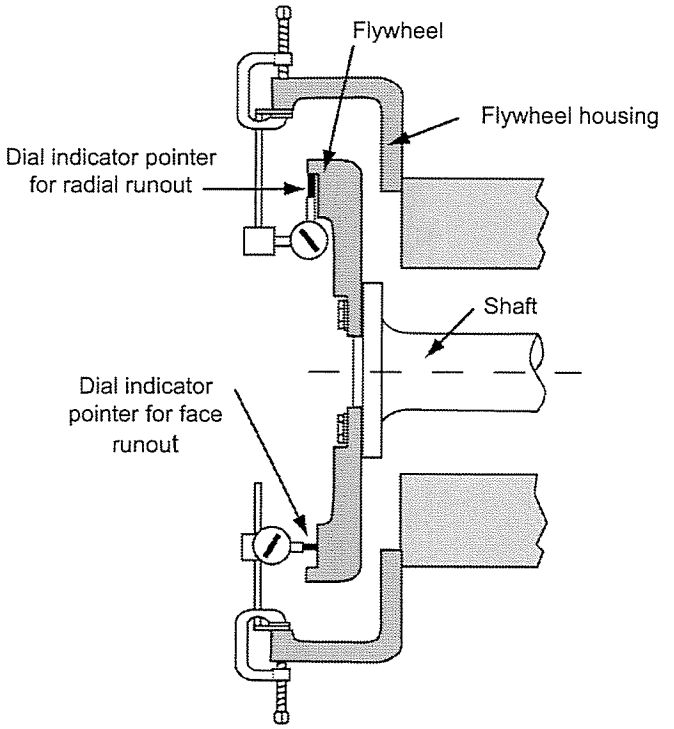

Figure 6: Flywheel check

Pilot diameter	Allowable runout (TIR)
6.5	0.002
7.5	0.002
8	0.002
10	0.003
11.5	0.003
14	0.004
16	0.005
18	0.005
21	0.006
24	0.007

Table 2: Maximum allowable flywheel runout (inches)

Check the generator adapter's radial and face runout by mounting a dial indicator on the generator shaft or coupling as shown in Figure 7. The maximum radial and face runout on the generator adaptor must not exceed 0.010 inch.

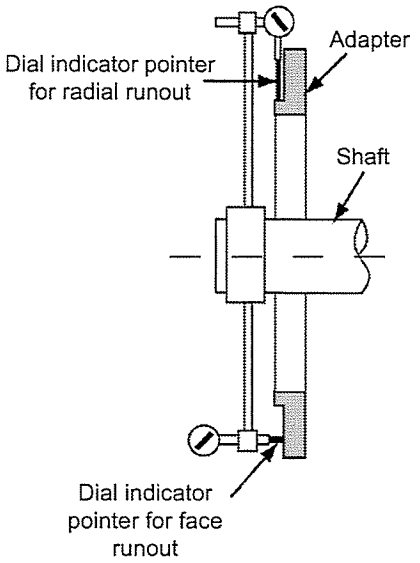

Figure 7: Generator adapter check

Check the generator coupling's radial and face runout by mounting a dial indicator to the generator adapter as shown in Figure 8. The maximum radial and face runout on the coupling must not exceed 0.003 inch.

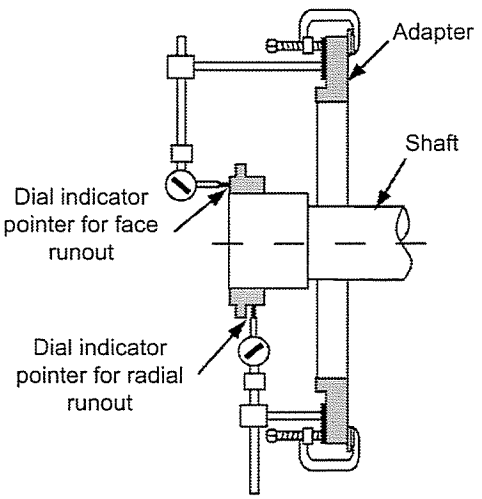

Figure 8: Generator coupling check

Install the portion of the coupling that fits into the engine flywheel following the manufacturer's recommended procedures and in accordance with engine manufacturer's specifications. Check the coupling's radial and face runout by mounting a dial indicator to the engine flywheel housing as shown in Figure 9. The maximum radial and face runout on the coupling must not exceed 0.004 inch.

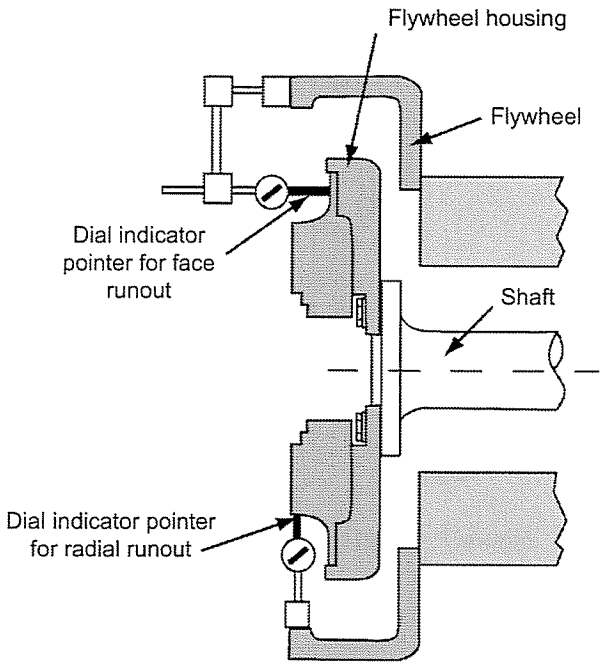

Figure 9: Engine coupling check

Measure and record the engine crank shaft end float and generator end float. Set the engine end float to the manufacturer's recommended position for alignment. Verify the generator end-float is set at a position of one half of the measured distance or at a position that will allow full thermal growth of the generator shaft when operated at rated temperatures.

Mount the generator on the skid, and move the generator to within 0.010 inch of the engine. Place two 0.010-inch shims in the horizontal (9 o'clock and 3 o'clock) positions between the generator adapter and the engine flywheel housing. Raising the rear, exciter end of the generator as necessary, place two 0.010-inch shims in the vertical (6 o'clock and 12 o'clock) positions between the generator adapter and the engine flywheel housing. This will give a good starting point for alignment. Remove the vertical shims at this time. (If necessary, mark holes to be drilled on the base, and remove the generator at this time.)

Mount a dial indicator on the generator shaft or half coupling to the flywheel radial surface for parallel alignment as shown in Figure 10. Mount a dial indicator on the flywheel coupling to the face of the generator half coupling for angular alignment as shown in Figure 10. Align the engine by rotating the prime mover in 90-degree increments and measuring total indicator runout. Tighten the generator to the base before taking each set of readings. Raise or lower the generator by adding or removing shims under the machined feet.

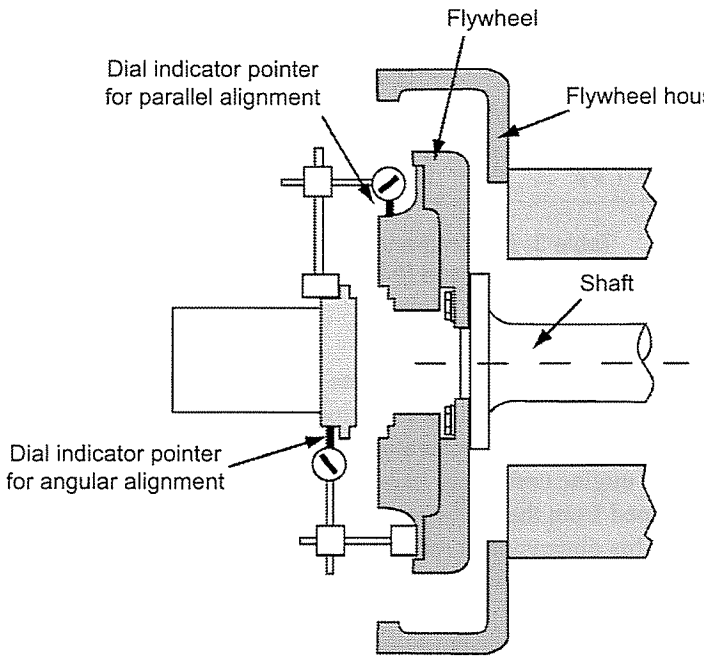

Figure 10: Alignment check

Following the final generator adjustment and runout check, remove the horizontal shims from the adaptor flywheel housing, and move the generator all the way to the adaptor. Then tighten the fasteners. Recheck alignment. Make sure angularity (face) total indicated runout does not exceed 0.001 inch per inch of generator shaft diameter and parallel (radial) total indicated runout does not exceed 0.003 inch.

Note: *Clearances between the adaptor pilot and the flywheel housing recess are designed to meet the tolerance of 0.001 to 0.015 inches.*

Torque the fasteners to the value shown in Table 3.

Shank diameter (in.)	SAE 5 steel torque	SAE 8 steel torque
1/4	9	13
5/16	18	28
3/8	31	46
7/16	50	75
1/2	75	115
9/16	110	165
5/8	150	225
3/4	250	370
7/8	378	591
1	583	893
1 1/8	782	1410
1 1/4	1097	1964
1 3/8	1461	2633
1 1/2	1748	3150

Table 3: Recommended cap screw torque (ft-lbs)

Notes: *Mounting of the indicators must allow complete rotation of the prime mover.*

Use dial indicators that are rigid so indicator sag won't be a factor. Using the shortest offset distance of the indicator bracket will reduce the effects of indicator droop or sag.

During alignment, you may also need to compensate for engine expansion due to heating. Generator expansion is generally not considered a factor.

If the genset is moved to a different location, check alignment before startup.

Caution: *Do not pry on the generator fan.*

Caution: *Generators equipped with sleeve oil bearings must have oil added to the bearing prior to rotation. See the bearing manual.*

Single-bearing alignment

Before assembling the generator to the prime mover, remove the exciter cover and adapter cover. Remove the blocking holding the drive discs to the adapter. Also make sure the generator bearing end clearance is not less than the total engine crankshaft axial movement plus 1/16 inch. The generator is shipped from the factory with 1/8-inch minimum bearing end clearance. (This dimension is recorded on the Factory Recorded Dimensions sheet, packaged with the generator.)

Measure the distance from the end of the exciter shaft extension to the bearing housing on the endbracket (dimension A in Figure 11). This dimension is recorded on the Factory Recorded Dimensions sheet, packaged with the generator. If the dimensions do not match, move the rotor axially relative to the stator until the dimensions are equal.

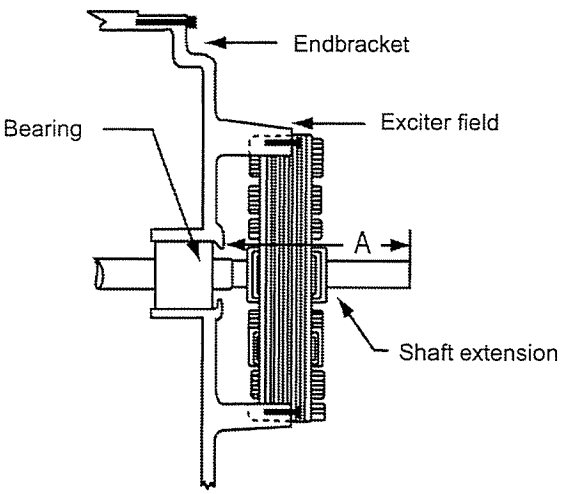

Figure 11: Generator coupling check

Check the engine flywheel housing pilots's radial and face runout by mounting a dial indicator and measuring the flywheel to the flywheel housing as shown in Figure 5. See Table 1 for maximum allowable runout.

Check the engine flywheel's radial and face runout by mounting a dial indicator and measuring the flywheel housing to the flywheel as shown in Figure 6. See Table 2 for maximum allowable runout.

Measure the generator drive plate diameter (dimension S of Figure 12) and flywheel bore diameter (dimension B of Figure 13). Drive plate diameter must not be greater than the flywheel bore diameter. Also check to make sure the hole centers match (dimension W of Figure 12 and dimension C of Figure 13).

Caution: *Never grind the OD of drive discs or attempt to drill out the holes. If the dive discs do not fit properly, use different discs or a different flywheel.*

Measure the axial distance from the surface on the generator adapter to the outside surface on the drive disc coupling plates (dimension Y in Figure 12). This dimension is recorded on the Factory Recorded Dimensions sheet, which was packaged with the generator. If the dimensions do not match, move the rotor axially relative to the stator until the dimensions are equal.

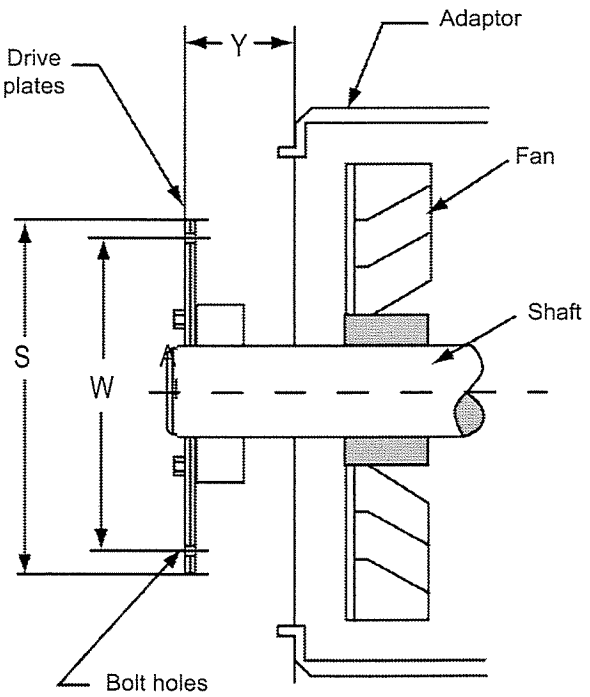

Figure 12: Single bearing generator drive plate and adaptor

Caution: *The number and thickness of drive discs are specified for torque requirements. Do not remove drive discs to compensate for spacing.*

Measure the axial distance from the machined surface on the engine flywheel housing the bottom of the fly wheel drive disc recess (dimension G in Figure 13). Make sure the difference between dimensions Y (of Figure 12) and G are less than 1/32 inch. If G is more than Y, install additional spacers between the drive discs and the generator hub, If Y is more than G, remove spacers between the drive discs and generator hub.

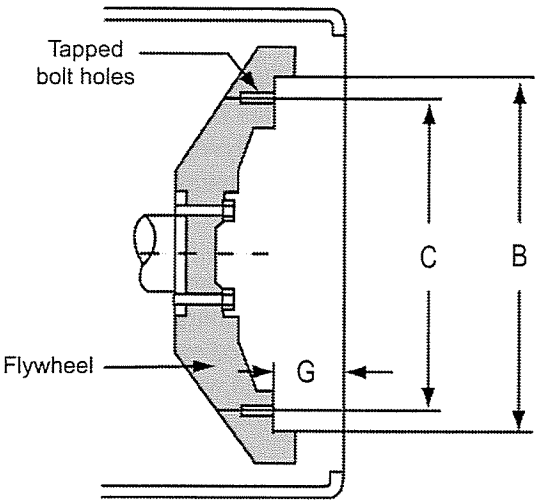

Figure 13: SAE flywheel and adapter

Install the generator to the engine. Make sure the drive discs seat in the recess of the flywheel housing. Secure the generator to the engine (drive discs to flywheel, adapter to flywheel housing), and the base. Use lock washers on all bolts. Torque the adapter and drive discs in a criss-cross pattern to the values in Table 3.

Ensure that the bolts in the flywheel do not bottom out. If they are too long or cannot be tightened with a socket or box wrench, use 1/4 to 3/8-inch long spacers inserted in the bolts as shown in Figure 14 to increase the clearance between the bolt head and the flywheel.

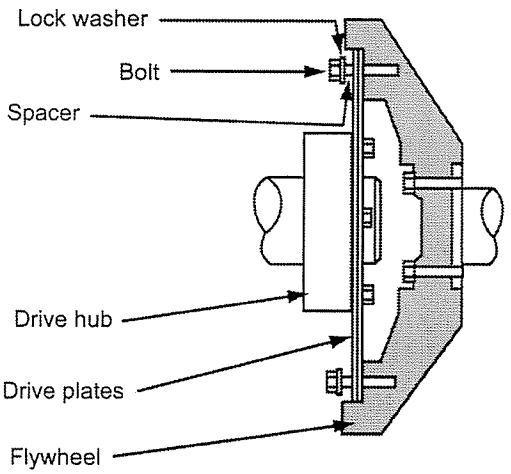

Figure 14: Disc-to-flywheel installation

Occasionally, there is insufficient clearance to install the bolts that fasten the drive discs to the engine flywheel, and the fan will have to be temporarily moved to accommodate this. This situation will typically occur with several types of generators:

- With the three-frame units that have an aluminum fan, loosen the fan hub bolts to move the fan. After installing the drive disc-to-flywheel bolts, move the fan back so the rotor-side edge is flush with the air opening and the minimum distance between the windings and the fan is 3/8 inch. Torque the fan hub bolts to 75 ft-lbs.

- With sheet metal fans with cast hubs that are in turn mounted on the drive hub, mark the drive hub as closes as possible to the fan hub. Loosen the two set screws, the fan clamping bolt, and the fan bolts. Wedge the fan open, and move it out of the way (See Figure 15). After attaching the drive discs-to-fly wheel bolts, align the fan hub to the mark to move the fan back to its original position. Ensure the key is fully in place under the fan hub and positioned so the set screw will press on the key. Tighten the fan hub clamping bolt and the set screws. Install the fan bolts and torque them according to Table 3.

Note: *The generator with sheet metal fans and cast fan hubs is shipped from the factory with the fan 1/2 to 3/4 inch from the fan baffle and clear of the inside adaptor for optimum air flow through the exhaust screen.*

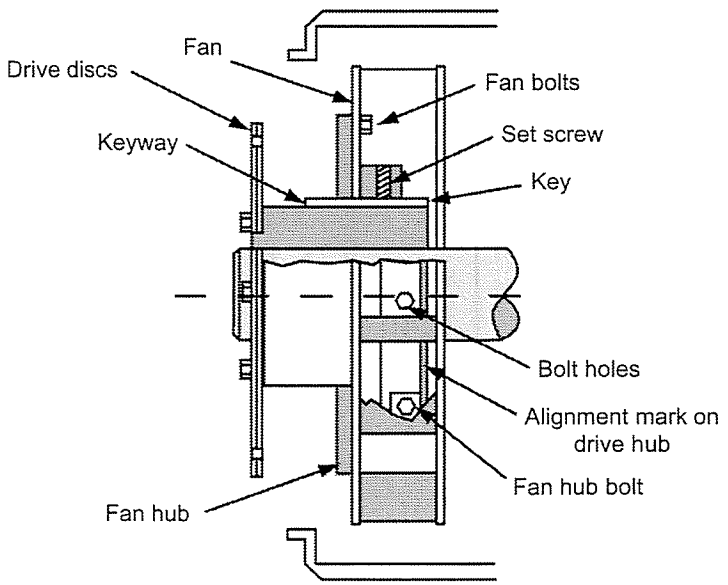

Figure 15: Moving sheet metal fans

After installing the drive disc-to-flywheel bolts, check the runout of the generator shaft by placing the base of a dial indicator on the generator frame and positioning of the probe on the shaft as shown in Figure 16. If the total indicated runout exceeds 0.003 inch, remove the drive discs bolts, and rotate the generator relative to the engine flywheel. Reinstall the bolts, and check the runout again.

Recheck the shaft-end-to-bearing-housing distance (dimension A in Figure 11).

Mount the brushless exciter armature assembly to the generator shaft (as described in the assembly procedures below).

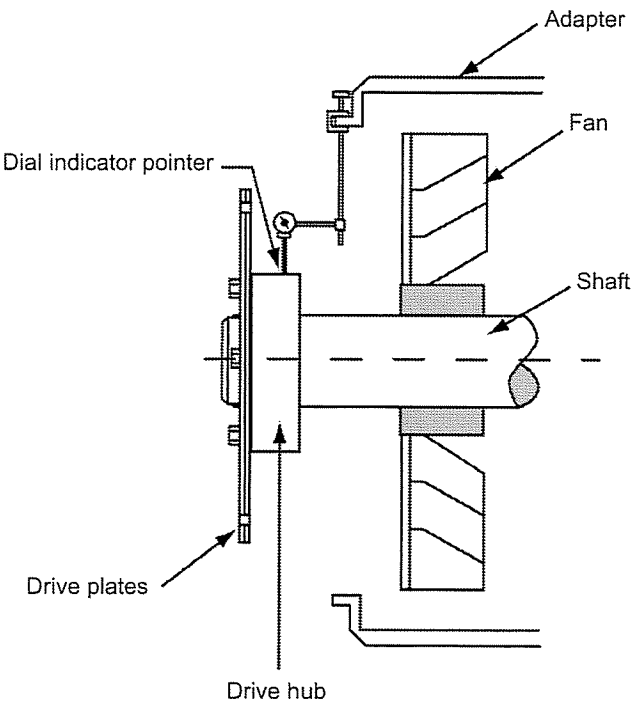

Figure 16 Runout check

Foot deflection

After alignment, check for foot deflection or "soft foot" condition on each shim location to eliminate distortion of the generator frame. Do this by loosing one mounting bolt at a time and checking deflection after retightening. Deflection at the shim location from shims under compression to a loosened condition must not exceed 0.003 inch.

Doweling

In case the mounting bolts loosen during operation, doweling will prevent movement of the generator. Dowel as follows:

Check the alignment after the generator has been in operation for at least 48 hours. If alignment is not satisfactory, realign.

Drill holes through the footpads and into the base in two mounting pads opposite each other. Drill the holes slightly smaller than the dowel pin.

Ream the holes to the proper diameter for the pin. Clean out chips, and install the pins.

Electrical connections

If the generator was subjected to a rapid change in temperature, freezing or wet conditions during shipment or storage, measure the insulation resistance of each winding and dry the generator, if necessary, as described in the maintenance section below.

Make all electrical connections (main load, temperature monitoring device, space heater, AVR) in accordance with local regulations and National/International Electrical Code requirements. Check the electrical diagrams provided with the generator or manual. The main terminals need to be properly spaced for the load connections. Refer to Table 3 for the proper torque values for the connections.

On larger generators grounding points are provided for properly grounding the system to the generator frame. The grounding wire must be of the same size as the generator leads.

Space heaters

When the generator has optional space heaters to prevent water condensation during long standstills, connect the space heaters so they start when the generator is turned off and stop when the generator is switched on. Refer to the electrical diagrams for the space heater characteristics.

Warning: *The space heaters are designed to be energized when the generator is shut down. They are hot enough to cause skin burns. Terminals for power at the space heaters are live during operation. Disconnect power to the space heaters before removing the generator covers.*

Inspection before startup

After electrical connections have been made, perform the following checks:

Check all the connections to the electrical diagrams provided.

Secure all covers and guards.

Caution: *Do not pry on the fan.*

Turn the rotor slowly with the appropriate starting mechanism (bar the engine or flywheel) through one revolution to see if the rotor turns freely.

Check the bearings to see they are properly lubricated.

Determine the direction of the engine rotation, and make sure that it matches the rotation arrows on the generator.

Make sure the power requirements comply with the data on the generator nameplate. Make sure that the engine-generator set is protected with adequate engine governors and against excessive overspeed. Make sure the output of the generator is protected with an overload protection device, such as circuit breakers or fuses, sized in accordance with National Electrical/International Electrical Code and local electrical code standards. Fuses need to be sized using the lowest possible current rating above the full-load current rating (115% of rated current is commonly recommended).

Remove tools and other items from the vicinity of the generator.

Operation

Initial startup: generators with both automatic and manual voltage control

1. Disconnect the generator output from the load. Open the main circuit breaker.

2. Turn the manual voltage adjust rheostat full counterclockwise.

3. Actuate the auto-manual switch to the manual position.

4. Start the prime mover, and bring the set to rated speed. Turn the manual voltage adjust rheostat to reach rated voltage. Close the output circuit breaker, and apply load in steps until the rated load is reached. Adjust the manual adjust rheostat as necessary to obtain the desired output voltage.

5. Gradually reduce the load, and adjust the rheostat accordingly until no load is reached. Open the circuit breaker, and stop the prime mover.

6. Actuate the auto voltage rheostat. Then start the genset, and bring it to rated speed. Adjust the voltage to the desired value.

7. Close the output circuit breaker. Then check the generator voltage and voltage regulation. Apply load in steps until the rated load is reached.

8. Check for vibration levels at no load and rated load. A slight increase is normal. As the load is maintained for 2-3 hours, the vibration levels will gradually increase and reach a final level.

Caution: *Do not actuate the auto-manual switch with the full load applied to the generator. Whenever possible, stop the generator before switching.*

Initial startup: Generators with automatic voltage control only (generator has an automatic voltage regulator (AVR) with no auto-manual switch)

1. Disconnect the generator output from the load by opening the main circuit breaker.

2. Turn the voltage adjust rheostat full counterclockwise. Start the prime mover, and bring the set to rated speed. Turn the voltage adjust rheostat to obtain the desired voltage.

3. Close the output circuit breaker, and apply load in gradual steps until the rated load is reach. Note the voltage regulation with the changes in load steps.

4. Check for vibration levels at no load and rated load. A slight increase is normal. As the load is maintained for 2-3 hours, the vibration levels will gradually increase and reach a final level.

Restoring residual magnetism/field flashing

The direct current necessary to magnetize the generator field (rotor) is obtained from the exciter. Upon starting the generator, current and voltage is induced into the exciter by the magnetic lines of force set up by residual magnetism of the exciter field poles. Residual magnetism of the exciter field poles may be lost or weakened by a momentary reversal of the field connection, a strong neutralizing magnetic field from any source, or non-operation for a long time. If the generator fails to generate voltage after it has come up to rated speed, it may be necessary to restore residual magnetism.

To restore the small amount of residual magnetism necessary to begin the voltage build up, connect a 12 or 24-volt battery to the exciter field coil circuit and flash as follows:

1. Open the output circuit breaker, and stop the engine.
2. Disconnect the exciter field coil wires EF1 at the terminal EF1 and EF2 at the terminal EF2, and connect the battery positive lead to the field coil lead EF1.

Note: *If the polarity of the exciter is reversed by flashing the field, it may be corrected by interchanging the battery leads.*

3. Flash the field by touching the battery lead to the field coil circuit terminal EF2.
4. Disconnect the battery leads.
5. Reconnect the field coil lead EF1 to terminal EF1, and reconnect the field coil lead EF2 to terminal EF2.
6. Start the generator, and check for voltage build up. Reflash if the generator output voltage does not build up, or flash with the generator running, the field coil wires connected to the regulator, and a 3-amp or larger diode off the positive terminal of the battery per Figure 17.

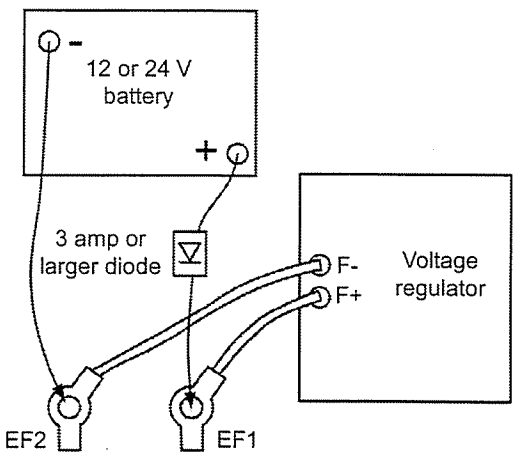

Figure 17: Field flashing setup with the field wires connected to the regulator

Continuous operation

Operate the generator within the nameplate values of kW, power factor, and voltage. If the generator is operated below the rated power factor and voltage, decrease the kVA to prevent overheating of the field and stator windings.

Rotor overheating may occur when the generator is carrying excessive unbalanced loads. Negative sequence currents flowing in the field pole face cause the rotor heating. For a general guide to the allowable phase unbalance, see Figure 18, Guide to allowable phase unbalance (which is based on a 10% equivalent negative sequence current).

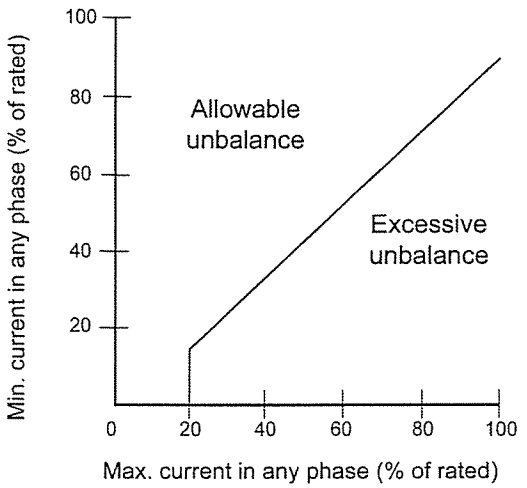

Figure 18: Guide to allowable phase unbalance

The guide is used in the following manner: Find the point where the vertical line (determined by the minimum current in any of the phases and expressed in percent of rated current) crosses the horizontal line (determined by the maximum current in any of the phases and expressed in percent of rated current). Ensure the point where these two lines intersect is within the permissible allowable unbalance region for safe operation of the generator.

Loss of field excitation can result in the unit operating out of synchronization with the system when operating is parallel. This has the effect of producing high currents in the rotor, which will cause damage very quickly. Protective relays should be considered to open the circuit breaker.

Idling

Unless the voltage regulator has V/Hz built in, having the generator set in operating mode while idling the engine can cause permanent equipment damage. If engine adjustments require that the engine be run at idle speed and the regulator does not have V/Hz, make the generator regulating system inoperative during idling by one of the following methods:

When the generator is provided with a voltage shutdown switch, be sure the switch is set to the idle position while the engine is running at idle speed.

Where the generator set is provided with field circuit breakers, set the circuit breaker to the off position while the generator is running at idle speed.

Where the generator set is provided with an automatic/manual control switch that has an off position, switch it to off while the engine is running at idle speed.

Where the generator set does not have any of the above options, remove the wires from the voltage regulator input power terminals when the engine is running at less than rated speed.

Caution: *Do not make connections or otherwise make contact with the generator leads or other devices connected to them unless the genset is stopped and the phase leads are grounded.*

Parallel operation

For the generator to operate in parallel with a system in operation, the phase sequence of the generator must be the same as that of the system. Use transformer to reduce the voltage to an acceptable level, and then use a phase rotation meter or incandescent lamp method, described in electrical machinery handbooks, for a phase sequence check.

The output voltage at the paralleling point must be the same as each instant, which requires that the two voltages be of the same frequency, same magnitude, same rotation, and in coincidence with each other.

Voltmeters indicate whether the voltage magnitude is the same, and frequency meters indicate whether the frequencies are the same. Whether the voltages are in phase and exactly at the same frequency is indicated by a synchroscope or by synchronizing lamps.

A synchroscope can be used to indicate the difference in phase angle between the incoming machine and the system. The generator can be paralleled by using incandescent lamps connected as shown in Figure 19. The voltage rating of the series lamps must equal the voltage rating of the transformer-low voltage winding.

Each prime mover in the system must have the same speed regulating characteristics, and the governors must be adjusted to give the same speed regulation by as determined by applying load that is proportional to the full load rating of the generator.

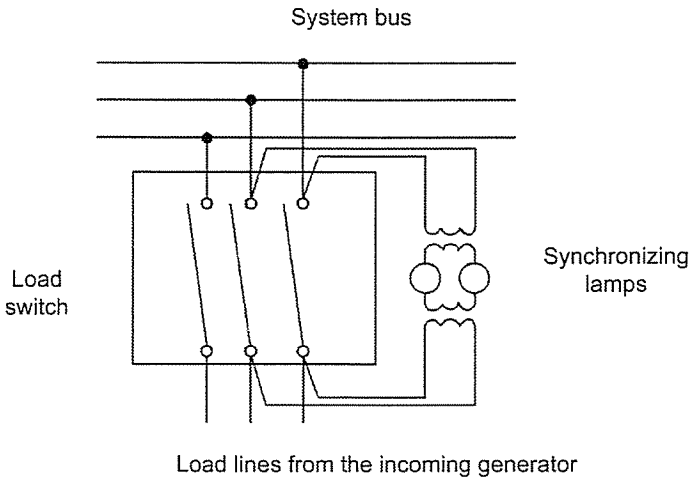

Figure 19: Synchronizing paralleled generators with test lamps

The voltage regulator must include paralleling circuitry.

If cross-current compensation is used, paralleling current transformers must give the same secondary current.

Current transformer secondary windings provide reactive kVA droop signal to the voltage regulator. Accidental reversal of this electrical wiring will cause the voltage to attempt to rise with load rather than droop. If this occurs during paralleling, stop the unit and reverse the wires at the voltage regulator terminals.

If the set is provided with a unit/parallel switch, set the switch to the parallel position on the unit being synchronized.

Synchronize the generator by adjusting the speed (frequency) slightly higher than the system. Observe the synchroscope or the lamps. The lamps should fluctuate from bright to dark at the rate of one cycle every 2 to 3 seconds. When the generator is in phase (the lights will be dark), close the circuit breaker. Immediately after closing the breaker, measure the line current kVAR of the generator. The readings must be within the rating of the unit. A high ammeter reading accompanied by a large kW reading indicates faulty governor control. A high ammeter reading accompanied by a large kVAR unbalance indicates problems with the voltage regulator. Adjusting the cross current or voltage droop rheostat should improve the sharing of kVAR.

To shut down the generator operating in parallel, gradually reduce the kW load by using the governor to reduce speed. When kW load and line current approach 0, open the generator circuit breaker. Operate the generator unloaded for several minutes to dissipate the heat in the windings. Refer to the prime mover manual for shutdown and cool-down procedures.

Maintenance

Warning: *Do not service the generator or other electrical machinery without de-energizing and tagging the circuit as out of service. Dangerous voltages are present, which could cause serious or fatal shock.*

Schedules

A regular preventive maintenance schedule will ensure peak performance, minimize breakdowns and maximize generator life. The schedule listed below is a guide for operating under standard conditions. Specific operating conditions may require reduced or increased maintenance intervals. Also, if there is a different or more specific schedule for your generator than the schedule provided below, it will be included as a supplement to the manual package.

Every day

Visually check generator bearing housings for any sign of oil seepage.

Check the operating temperatures of the generator stator windings.

Check the control panel voltmeter for proper stability and voltage output.

Monitor the power factor and generator loading during normal operation.

With generators that have sleeve oil bearings, check the operating temperatures and sight glass levels (if applicable).

Every week

Visually inspect the bearing exterior for dirt, and clean if necessary.

Inspect any generator air filters for build up of contaminants, and clean or replace as required

Every 2000 Hours or 6 months of operation

Remove generator outlet box cover. Visually inspect the stator output leads and insulation for cracking or damage. Check all exposed electrical connections for tightness. Check transformers, fuses, capacitors, and lightning arrestors for loose mounting or physical damage. Check all lead wires and electrical connections for proper clearance and spacing.

Clean the inside of the outlet box, air screens, bearing housings, and air baffles with compressed air and electrical solvent.

With generators that have ball or roller bearings, check machine vibrations and bearing condition with a spectrum analyzer or shock pulse.

Regrease the regreaseable-type bearings. With generators that have sleeve oil bearings, inspect bearing oil for proper levels and clarity.

Every 8000 hours or 1 year of operation
Check insulation resistance to ground on all generator windings, including the main rotating assembly, the main stator assembly, the exciter field and armature assemblies, and the optional PMG assembly.

Check the space heaters for proper operation.

Check the rotating rectifier connection tightness.

With generators that have sleeve oil bearings, replace the bearing oil.

Every 20,000 hours or 3 years of operation
With generators that have sleeve oil bearings, perform a sleeve bearing inspection to include the removal of the upper bearing housing and bearing liner to inspect the liner, shaft journal, and seal surfaces for wear or scoring.

Remove the endbrackets, and visually inspect the generator end windings for oil or dirt contamination. Excessive contamination may necessitate surface cleaning with compressed air and electrical solvent.

Inspect the fan and fan hub for damage.

Every 30,000 hours or 5 years of operation
(Contact Kato Engineering for assistance)

Disassemble the generator (this includes rotor removal).

Clean the generator windings using either (depending upon the severity of contamination) 1) compressed air and electrical solvent or 2) de-greaser and high pressure hot water wash. Dry the windings to acceptable resistance levels (see the dry out procedure).

Inspect the rotor shaft bearing journals for wear or scoring.

With generators that have ball or roller bearings, replace the bearings.

With generators that have sleeve bearings, replace the bearing liners and oil seals.

Maintenance procedures

Visual inspection methods of windings

Electric machines and their insulation systems are subjected to mechanical, electrical, thermal and environmental stresses that give rise to many deteriorating influences. The most significant of these are the following:

Thermal aging: This is the normal service temperature deteriorating influence on insulation.

Over temperature: This is the unusually high temperature of operation caused by conditions such as overload, high ambient temperature, restricted ventilation, foreign materials deposited on windings, and winding faults.

Overvoltage: This is an abnormal voltage higher than the normal service voltage, such as caused by switching or lightning surges or non-linear loads. Operating above rated nameplate voltage will reduce insulation life.

Contamination: This deteriorates electrical insulation by 1) conducting current over insulated surfaces 2) by attacking the material to reduce electrical insulation quality or physical strength, or by 3) thermally insulating the material so the generator operates at higher than normal temperatures. Such contaminants include water or extreme humidity, oil or grease including unstable anti-wear and extreme pressure lubricants, conducting and non-conducting dusts and particles, industrial chemicals such as acids, solvents, and cleaning solutions.

Physical damage: This contributes to electrical insulation failure by opening leakage paths through the insulation. Physical damages can be caused by physical shock, vibration, over-speed, short-circuit forces or line starting, out-of-phase paralleling, erosion by foreign matter, damage by foreign objects and thermal cycling.

Ionization effects: Ionization (corona), which may occur at higher operating voltages, is accompanied by several undesirable effects such as chemical action, heating, and erosion.

To achieve maximum effectiveness, a direct a visual inspection program initially to those areas that are prone to damage or degradation caused by the influences listed below. The most suspect areas for deterioration or damage are 1) ground insulation, which is insulation intended to isolate the current carrying components from the non-current bearing components, and 2) support insulation: which includes blocks and slot wedges and are usually made from compressed laminates of fibrous materials, polyester, or similar felt pads impregnated with various types of bonding agents.

Deterioration or degradation of insulation from thermal aging: Examination of coils reveal general puffiness, swelling into ventilation ducts, or a lack of firmness of the insulation, suggesting a loss of bond with consequent separation of the insulation layers from themselves or from the winding conductors or turns.

Abrasion: Abrasion or contamination from other sources, such as chemicals and abrasive or conducting substances, may damage coil and connection surfaces.

Cracking: Cracking or abrasion of insulation may result from prolonged or abnormal mechanical stress. In stator windings, looseness of the bracing structure is a certain sign of such phenomena and can itself cause further mechanical or electrical damage if allowed to go unchecked.

Erosion: Foreign substances impinging against coil insulation surfaces may cause erosion.

Cleaning

Exterior: Wipe loose dirt from the exterior with a clean, lint-free cloth. Remove stubborn accumulations of dirt with a detergent or solvent that won't damage the paint or metal surfaces. Use a vacuum to clean ventilating ports.

Warning: *When using cleaning solvents, ensure adequate ventilation and user protection.*

Windings, assembled machines: Where cleaning is required at the installation site and complete disassembly of the machine is unnecessary or not feasible, pick up dry dirt, dust or carbon with a vacuum cleaner to prevent the redistribution of the contaminant. A small non-conducting nozzle or tube connected to the vacuum cleaner may be required to reach dusty surfaces or to enter into narrow openings. After most of the dust has been removed, a small brush can be affixed to the vacuum nozzle to loosen and allow removal of dirt that is more firmly attached.

After the initial cleaning with a vacuum, compressed air may be used to remove the remaining dust and dirt. Compressed air used for cleaning must be clean and free of moisture or oil. Air pressure or velocity must be adequately controlled to prevent mechanical damage to the insulation. Disassembly of the machine and more effective cleaning by a qualified Kato technician may be required if the above described field service cleaning procedures do not yield effective results.

Windings, disassembled machines: Take an initial insulation resistance reading on the machine to check electrical integrity. The high pressure hot water wash method of cleaning, which sprays a high velocity jet of hot water and water containing a mild detergent, is normally effective in cleaning windings, including those subjected to flooding or salt contamination. Use multiple sprays with clean water to remove or dilute the detergent following the detergent spray. Dry the machine until normal insulation resistance values are obtained at room temperature. Solvents,

such as naphtha, are effective for removing oil or grease and may be required if water or detergent is not adequate.

Electrical contacts: Clean electrical contacts, switch contacts and terminals with an approved contact cleaner. Do not file contacts.

Insulation resistance tests at low voltage

Insulation tests are conducted for two reasons: to discern existing weakness or faults or to give some indication of expected service reliability.

Caution: *The insulation resistance tests are usually made on all or parts of an armature or field circuit to ground. They primarily indicate the degree of contamination of the insulating surfaces or solid insulation by moisture and other conducting influences and will not usually reveal complete or uncontaminated ruptures.*

Insulation resistance tests are based on determining the current through the insulation and across the surface when a direct voltage is applied. The current is dependent upon the voltage and time of application, the area and thickness of the insulation, and the temperature and humidity conditions during the test.

Note: *The insulation resistance value increases with decreasing winding temperatures. All readings must be corrected to winding temperatures. Use Table 4 for converting megger readings to other temperatures (e.g., 100 megohms at 50° C is converted to 170 megohms: 1.7 x 100).*

The insulation resistance test is used to determine the insulation condition prior to application of more extensive testing measures. Refer to the following electrical measurement procedures for testing detail. Contact Kato Engineering or refer to IEEE Standard. 432-1992 when more extensive insulation tests are required.

Winding Temp (°C)	Conversion factor
10	0.23
20	0.37
30	0.6
40	1
50	1.7
60	2.7
70	4.5
80	7.5
90	14
100	23
110	38
120	61

Table 4: Temperature Conversion Factor for Resistance Readings

Exciter field (stator) and PMG armature (stator)

1. Disconnect the exciter leads from the terminals in the terminal box.
2. Connect exciter leads to one clamp of 500-volt megger, and connect the other clamp to the generator frame.
3. Apply 500 volts from the megger, and measure the resistance reading after 1 minute. The reading must be a minimum of 1 megohm. If it is not, refer to the dry out procedures.
4. Ground the exciter field leads to the generator frame for several minutes after the megger has been disconnected. This will allow the voltage build up to be properly discharged.

Exciter armature

1. Disconnect the exciter armature leads from the rotating rectifiers.

2. Connect the leads of exciter armature to one clamp of a 500-volt megger, and connect the other clamp to suitable connection on the shaft.

Warning: *Never apply the megger to the rotating rectifier.*

3. Apply 500 volts from the megger, and measure the resistance reading after 1 minute. The reading must be a minimum of 1 megohm. If it is not, refer to the dry out procedures.

4. Ground the exciter leads to the shaft after disconnecting the megger. This will allow the voltage build up to be properly discharged.

Main rotor

1. Disconnect the generator field leads from the positive and negative terminals of the rotating rectifier.

2. Connect the positive and negative leads to one clamp of the 500-volt megger, and connect the other clamp to the shaft.

3. Apply 500 volts from the megger, and measure the resistance reading after 1 minute. The reading must be a minimum of 1 megohm. If it is not, refer to the dry out procedures.

4. Ground the field leads to the shaft after disconnecting the megger. This will allow the voltage build up to be properly discharged.

Main stator

1. Disconnect power connections and all control apparatus from the generator terminals.

2. Measure insulation resistance of each phase separately with the two other phases shorted to the frame.

3. Use a 500-volt megger connected between the lead(s) of the phase to be measured and generator frame. The minimum 1-minute insulation resistance must not be less than that given by the following formula:

$$\text{Resistance in megohms} = \frac{\text{Rated generator voltage}}{1000} + 1000$$

   If it is less than above, refer to dry out procedures.

4. Ground the leads to the frame after the 1-minute megger test. This will allow the voltage build up to be properly discharged.

Caution: *Do not apply heat too rapidly. It could damage the windings.*

Dry out procedures

If the insulation resistance readings are below the recommended minimum values specified previously, use one of the dry out procedures described below. Select the procedure based on the size and location of the unit, available equipment, and experience of personnel. Before drying, remove the voltage regulator, and cover all inlet and discharge openings. Provide an opening at the top of the machine, preferably at the fan end, for moisture to evaporate.

Drying with external heat: Place heat lamps, space heaters (in addition to the ones already supplied) or a steam pipe near the windings. Monitor winding temperatures. Raise winding temperature gradually at a rate of 50° F (10° C) per hour up to 200° F (93° C). Measure insulation resistance at 1-hour intervals. Typically the insulation resistance will slowly drop while the temperature is coming up, and then gradually increase and level out.

Drying with ac current in the armature: Short circuit the generator terminals. Provide dc excitation to the brushless exciter field winding. Insert a current transformer and an ammeter to read full load current. Run the generator at rated speed. Apply excitation to the exciter field until rated current is developed. Monitor winding temperatures until they stabilize. Continue running until insulation resistance values level off. Monitor winding temperatures. Raise winding temperature gradually at a rate of 50° F (10° C) per hour up to 200° F (93° C). Measure insulation resistance at 1-hour intervals. Typically, the insulation resistance will slowly drop while the temperature is coming up and then gradually increase and level out.

Bearing lubrication

Shielded or sealed ball bearings: Shielded or sealed ball bearings are factory packed with lubricants and generally can be operated several years without requiring replenishment or change of the grease. If repacking the grease is necessary, disassemble the machine, clean the bearings, and repack the bearings about 1/2 full using a high quality ball bearing grease, which must be capable of lubricating satisfactorily over a temperature range of the lowest ambient temperature to 250° F.

Regreaseable ball or roller bearings: In applications where regreaseable bearings are used, grease fill fittings and relief vales are incorporated into the bearing housing. Lubricate the bearings in accordance with the lubricating instructions attached to the generator.

Sleeve bearings: Lubricate the bearings in accordance with the lubricating instructions attached to the generator and the bearing lubrication instructions, which are provided in the manual package as supplementary material.

Rectifier tests

If a failure of a rectifier is suspected, remove the exciter cover. Remove the nut and washer holding the rectifier in the heat sink, and remove the diode lead wire. Lift the rectifier from the heat sink (see figure 20 for an overview). Test the entire rectifier with an ohmmeter or test lamp as follows:

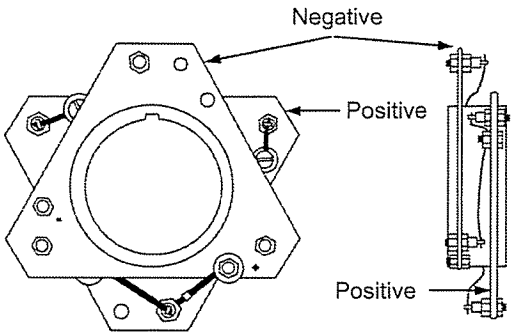

Figure 20: Rectifier

Ohmmeter: Connect the ohmmeter leads across the rectifier in one direction (see Figure 21). Note the meter reading. Reverse the leads, and note the meter reading. The meter should indicate a low resistance when the leads are across the rectifier in one direction and a high resistance when the leads are across the rectifier in the opposite direction. A low resistance in both directions indicates a short. A high resistance in both directions indicates an open rectifier.

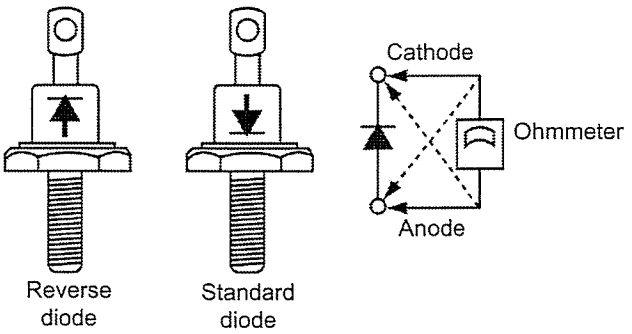

Figure 21: Testing the rotating rectifier with an ohmmeter

Test lamp: Connect the leads of a test lamp, consisting of standard flashlight batteries and a flashlight and built, as shown in Figure 22, across the rectifier in one direction. Then reverse the leads. The light should light in one direction but not the other. If the light lights in both directions, the rectifier is shorted. If the light does not light in either direction, the rectifier is open.

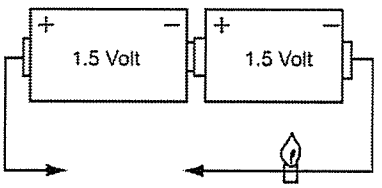

Figure 22 Test lamp

Replace defective rectifiers with rectifiers of the same operating characteristics as rectifiers installed in the generator at the factory. Order rectifiers by part number, including the model and type of exciter as well as the generator serial number.

Surge protectors may be included on the rectifier. Disconnect one lead of the surge protector, and connect the leads of a test lamp, consisting of standard flashlight batteries and a flashlight and built as shown in Figure 21, across the surge protector in either direction.. If the light comes on, the surge protector is defective. Order surge protectors by part number, including the model and type of exciter as well as the generator serial number. Following replacement, make sure that the field lead tie-down lacing is securely wound on the shaft and tied tightly.

Disassembly

Note: *The following procedures are meant to be a general guide. Procedures for your unit may vary.*

Warning: *Ensure the generator has stopped and is de-energized before disassembly.*

Warning: *Use a hoist and slings or chains to support components during removal. Be extremely careful not to damage components.*

Overall disassembly

1. Remove the terminal box cover, and disconnect the load leads and exciter field leads. Tag the leads to ensure they are correctly connected when the generator is reassembled.

2. Remove the bolts securing the generator feet to the base, and move the generator to an area that allows sufficient room for disassembly.

3. Remove the coupling or drive plates.

4. Remove the exciter cover.

5. Remove the clips securing the exciter field leads to the exciter frame and endbracket. Disconnect the leads and remove the exciter frame/ stator and/or exciter-PMG frame/stator.

6. Remove the (optional) PMG and exciter armature as described below.

7. Support the shaft. Remove the exciter-end endbracket bolts, and remove the endbracket. Tap lightly with a rubber or fiber mallet to loosen the endbracket if necessary. Repeat with the drive-end endbracket (if applicable).

8. Remove the fan from the hub where applicable. If necessary, make sure to mark the location of the fan for reinstallation.

9. Float out the rotor (see Figure 23). First attach a pipe over the shaft on the drive end. Attach slings around the pipe on one end and around the shaft on the opposite end. Lift up the rotor, and move it out, resting the rotor as the slings are moved down the pipe for the next lifting stage.

Warning: *Make sure the pipe is strong enough to support the weight of the rotor and that it does not have rough edges on the inside, which could damage the shaft.*

Caution: *To prevent tension on the shaft, put the slings around the largest shaft step possible.*

Caution: *Make sure the rotor does not rest on the stator during the stages of movement. Make sure the rotor does not hit the stator.*

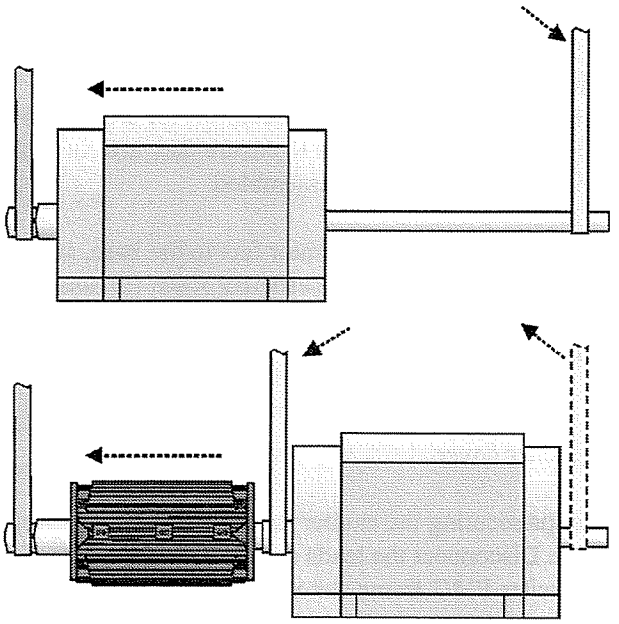

Figure 23: Floating the rotor

Caution: *Ensure the generator field wires are flat in the wireway so they don't tear during pulling. Do not pull on the edges of the heat sinks or on the exciter armature windings.*

Warning: *Pull the PMG off straightly. The assembly may pull toward other steel components. Be careful that your fingers or hands do not get pinched.*

Exciter armature and PMG removal (see Figure 24)

1. Remove the exciter cover.
2. Remove the retaining bolt and washer.
3. Disconnect the field wires on the rotating rectifier.
4. If the generator has a PMG, pull it off separately using hand force. Wrap the PMG rotor in plastic to avoid contamination with metal filings.
5. Slowly pull the armature assembly off of the generator shaft. If the exciter can not be pulled off by hand, use a hydraulic jack as shown in Figure 25.
6. Remove the key from the keyway in the generator shaft.

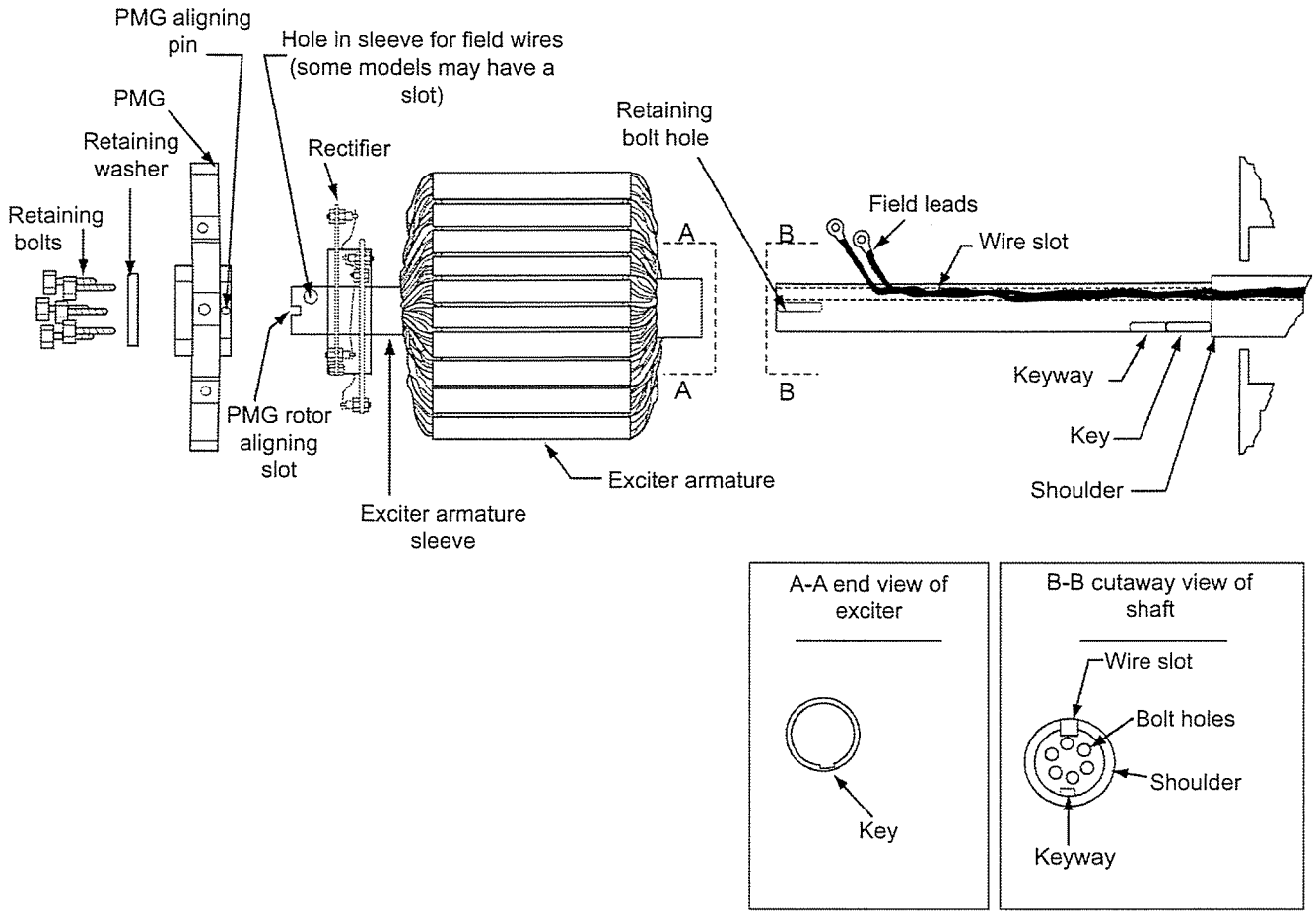

Figure 24: Exciter armature assembly

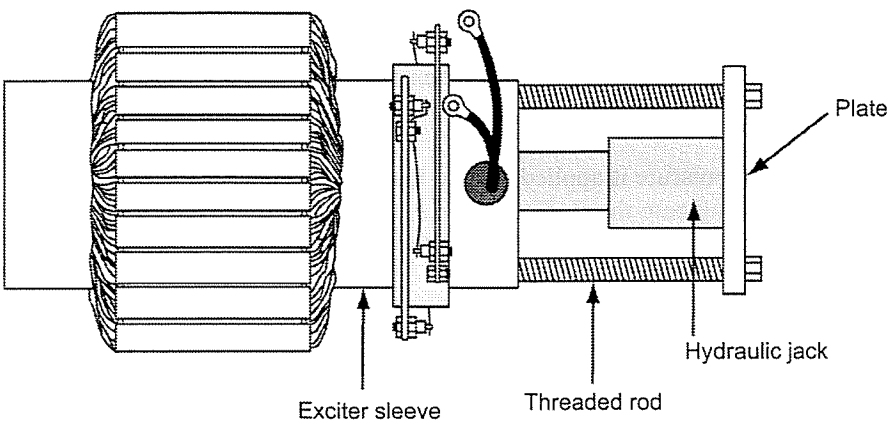

Figure 25: Pulling the armature assembly

Bearing removal

1. Remove the endbracket(s) to expose the bearing(s).

2. Use a puller to remove the bearing from the shaft end with a cap. If the bearing is going to be used again, make sure the puller supplies pressure only against the bearing inner ring (see Figure 26).

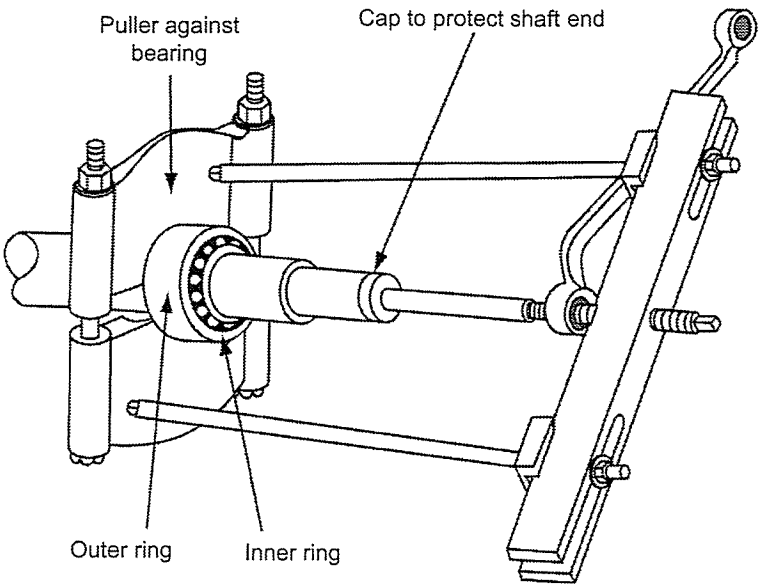

Figure 26: Pulling the bearing

Caution: *Make sure all components are clean before assembly.*

Torque fasteners to the values specified in Table 3 unless otherwise specified.

Assembly

Bearing installation (done prior to installing the rotor)

1. Heat the bearing to 220° - 250° F in a clean oven or with an induction heater.

2. Start the heated bearing on the shaft. Then use a fiber or soft metal tube to tap the bearing into place.

3. Ensuring that pressure is applied only to the bearing inner ring, press the bearing onto the shaft until the inner ring seats against the bearing shoulder on the shaft. Assemble the rest of the generator after the bearing has cooled.

Overall assembly

1. Float in the rotor until the rotor and stator laminations line up. Position the rotor such that a full pole face is at the bottom.

2. Install the endbrackets. Support the rotor during installation. Put Nox-Rust on the bare mating surfaces to prevent rust.

3. Install the exciter armature and optional PMG as described below.

4. Install the covers.

5. Install the coupling or drive plates.

5. Reconnect the load leads and exciter leads.

Exciter armature and PMG installation (see Figure 24)

1. Clean the shaft and inside of the exciter sleeve.

2. Place the key in the slot in the shaft.

3. Lay the generator field wires flat in the wireway with the wire ends protruding past the end of the shaft.

4. Position the exciter armature assembly in line with the shaft, and turn the assembly to the position where the keyway in the exciter sleeve is in line with the key in the generator shaft.

5. With hand force, push the exciter armature assembly over the shaft, so the end of the sleeve is against the shoulder on the shaft. When it is part of the way onto the shaft, start the field lead wires through the wire hole or slot in the exciter sleeve. It may be necessary to tap lightly on the exciter sleeve in order to move the assembly over the key. Use a fiber or rubber mallet. If installation is still a problem, use a heat gun to expand the exciter sleeve.

Caution: *Do not pound on the rectifier or armature windings.*

6. Connect the exciter armature wires to the rectifier terminals.

7. If the generator has a PMG, place it onto the end of the exciter sleeve. Make sure it is aligned with the pin slot in the end of the exciter sleeve.

8. Install the retaining washer and bolt, and torque (60 ft-lbs for a 1/2-inch diameter bolt; 200 ft-lbs for a 3/4-inch diameter bolt).

9. Install the exciter frame/stator and/or exciter-PMG frame/stator. Install the clips securing the exciter field leads to the exciter frame and endbracket and connect the leads.

Note: *To measure air gap, measure completely around the gap between the exciter armature and exciter field with a feeler gauge. Keep the gauge at the tightest point, and turn the generator over to measure the air gap as the rotor turns.*

Caution: *Do not pry on the fan.*

10. Measure the air gap between the exciter armature and exciter field and between the PMG rotor and PMG stator. If the air gap of the armature is less than specified in Table 5 or if the air gap of the PMG is less than 0.020 inch, check 1) generator-engine alignment, 2) check for bearing wear, 3) check for misalignment of the armature, PMG or stator.

Exciter armature diameter (in.)	Minimum air gap (in.)
5 3/4	0.014
9 7/8	0.014
12 1/2	0.018
16 1/4	0.035

Table 5: Exciter air gap

11. Install the exciter cover.

Storage

If the generator is not installed in its operating location as soon as received, store it in a clean, dry area, not subject to vibrations or sudden temperature or humidity changes. Make sure the storage area temperature is between 10° F and 120° F and the relative humidity is less than 60%. If possible, storage should be in an ambient temperature of approximately normal room temperature. Protect the shaft from corrosion by applying an anti-corrosion agent. Cover the unit with a durable cover

Prepare units that cannot be stored in a temperature and humidity controlled area as follows:

Install desiccant bags in the exciter cover and inside the end bells.

Vacuum seal the unit in a covering of plastic or other material designed for that purpose.

Adequately tag the generator to ensure that preservative greases and desiccant bags are removed before the unit is placed in operation.

Warning: *If necessary, remove the covers around the space heaters to ensure against fire.*

If space heaters are supplied, energize them to keep condensation from the windings.

Caution: *Grease used in ball and roller bearing generators is subject to time deterioration. Before placing the unit into service after long-term storage, check the bearings for corrosion, and replace the grease.*

For storage longer than 2 months, rotate the shaft a minimum of 10 revolutions every 60 days.

Troubleshooting (corrective maintenance)

Between regular preventive maintenance inspections, be alert for any signs of trouble. Correct any trouble immediately. See Table 6 for symptoms, causes and remedies.

Warning: *Problems left uncorrected can result in injury or serious damage, which can result in costly repairs and downtime.*

Symptom	Cause	Remedy
No Voltage	Open circuit breaker or fuses (if voltage is sampled on the load side of fuses or circuit breaker)	Check. Reset the circuit breaker or replace fuses if open.
	Overvoltage, undervoltage, or overload devices tripped (when protective devices are incorporated into the circuit)	Check for the cause of the abnormal condition. Correct any deficiencies. Reset devices. Check the generator nameplate for nominal operating values.
	Open circuit in exciter field	Check continuity of shunt field and leads to voltage control. (Use ohmmeter or wheatstone bridge) If open in field coils, remove exciter field assembly and return assembly to factory for repair.
	Loss of residual magnetism in exciter field poles	Restore residual magnetism or flash field. When the voltage regulator is a model that requires flashing, install an automatic field flashing system.
	Open circuit in stator windings	Check for continuity in the windings. Return the generator to the factory for repair if open.
	Malfunction of automatic voltage regulator	See troubleshooting of voltage regulator. Correct deficiencies.
	Short-circuited generator output leads	Clear lead to restore voltage buildup.
	Open in rotating rectifiers	Check rotating rectifiers, and replace if open.
	Open in generator field	Check for continuity and return rotor to factory for repair if field coils are open.
	Shorted or grounded surge protector	Check for shorts or grounds. Replace .
	Shorted or grounded rotating rectifier	Check for shorts grounds. Replace or repair.
	Shorted or grounded exciter armature	Check for shorts or grounds. Replace or repair.
Low voltage	Shorted leads between the exciter armature and generator field	Test and repair.

Low voltage (cont.)	Improper adjustment of voltage adjust rheostat	Adjust rheostat.
	Excessive load	Reduce load. With three-wire, single-phase and four-wire, three-phase generators, the load on each leg must be as evenly balanced as possible and must not exceed the rated current on any leg.
	Line loss	Increase the size of the line wire.
	High resistance connections (hot)	Make better connections.
	Shorted main or exciter field	Test the field coils for possible short by checking resistance with an ohmmeter or resistance bridge. Return the rotor assembly to the factory for repair if field coils are shorted.
	Low power factor	Reduce inductive (motor) load. Some ac motors draw approximately the same current regardless of load. Do not use motors of larger horsepower rating than is necessary to carry the mechanical load.
	Weak field due to operating in a warm temperature	Improve the ventilation of the generator. Field current can be increased providing the generator temperature rating stamped on the nameplate is not exceeded.
	Defective rectifiers in rectifier assembly (stationary)	Check rectifier assembly. Replace defective fuses or rectifiers.
	Excessive load	Reduce load to rated value.
	Defective bearing	Replace the bearing.
	Improper speed of engine driven generator set due to defective governor, ignition system, or carburetor	Check and correct deficiencies.
	Voltage regulator not operating properly	Check the regulator. Adjust, repair or replace.
Fluctuating voltage	Prime mover speed fluctuating	Check frequency and voltage of incoming power when the generator set is motor driven. Check engine governor on engine-driven generator sets.
	Loose internal or load connections	Tighten all connections.
	Generator overloaded	Reduce load to rated value.
	dc excitation voltage fluctuating	Trace dc excitation circuit. Correct any defects.
	Overspeed	Correct speed of prime mover.
High voltage	Improper adjustment of voltage adjust rheostat or voltage regulator	Adjust rheostat and/or voltage regulator.

Overheating	Clogged ventilating screens and air passages	Clean all screens and air passages.
	Dry or defective bearings	Replace defective bearings.
	Coupling misaligned	Align the generator set.
	Generator field coils shorted or grounded	Test field coils for shorts. Replace shorted rotor or return it to the factory for repair.
	Unbalanced load or overload, low PF	Adjust load to nameplate rating.
Vibrations	Defective or dry bearings	Replace defective bearings.
	Misalignment of generator and prime mover	Align the generator set.
	Generator not properly mounted	Check mounting. Correct defective mounting.
	Transfer of vibration from another source	Isolate the generator set from the source of vibration by installing vibration dampeners between generator set base and foundation.

Table 6: Troubleshooting

Appendices

List of equipment required for installation and maintenance:

Test equipment	Notes
Ammeter	Clamp-on, 0 to 500 amp range for measuring of electrical current.
Multimeter	Digital, for measuring voltage, current, frequency and resistance.
Thermometer	For measuring temperature in Celsius
Megger	To measure insulation resistance.
Resistive Bridge	To measure resistance of windings.
Special tools	
Bearing puller	For changing bearing.
Exciter puller	For pulling exciter armature
Standard tools	
Cable tool	Crimping
Flashlight	As required
Grease gun	For lubricating bearings
Hammer	Soft-faced
Lamp (incandescent)	Safety light
Screwdrivers	Standard, sized as required
Screwdrivers	Phillips, sized as required
Wrench	Adjustable, 12-inch
Wrench	Torque 0 to 100 ft-lb
Wrench set	Allen, 1/8 to 1/2 inch
Wrench set	Socket, 1/4 to 1 Inch with 3/8 and 1/2 inch drive
Wrench set	Standard, open-end/box-end combination sized 1/4 to 1 inch
Vacuum	Electric with nonmetallic nozzle
Materials	
Air	Compressed, dry.
Corrosion inhibitor	Nox-Rust VC #10 Oil or equivalent
Covering material	Waterproof desiccant bags for protection from moisture during long-term equipment storage
Detergent	As required for cleaning
Gloves	Chemical-protective
Gloves	Electrical-protective
Heaters	Space Heater, for eliminating excess moisture in damp areas and dry out of motor or generator windings
Plastic	Protection for long-term storage
Rags	As required for cleaning
Water	Warm and clean, for cleaning
Tags	Warning and cautions

Main part location

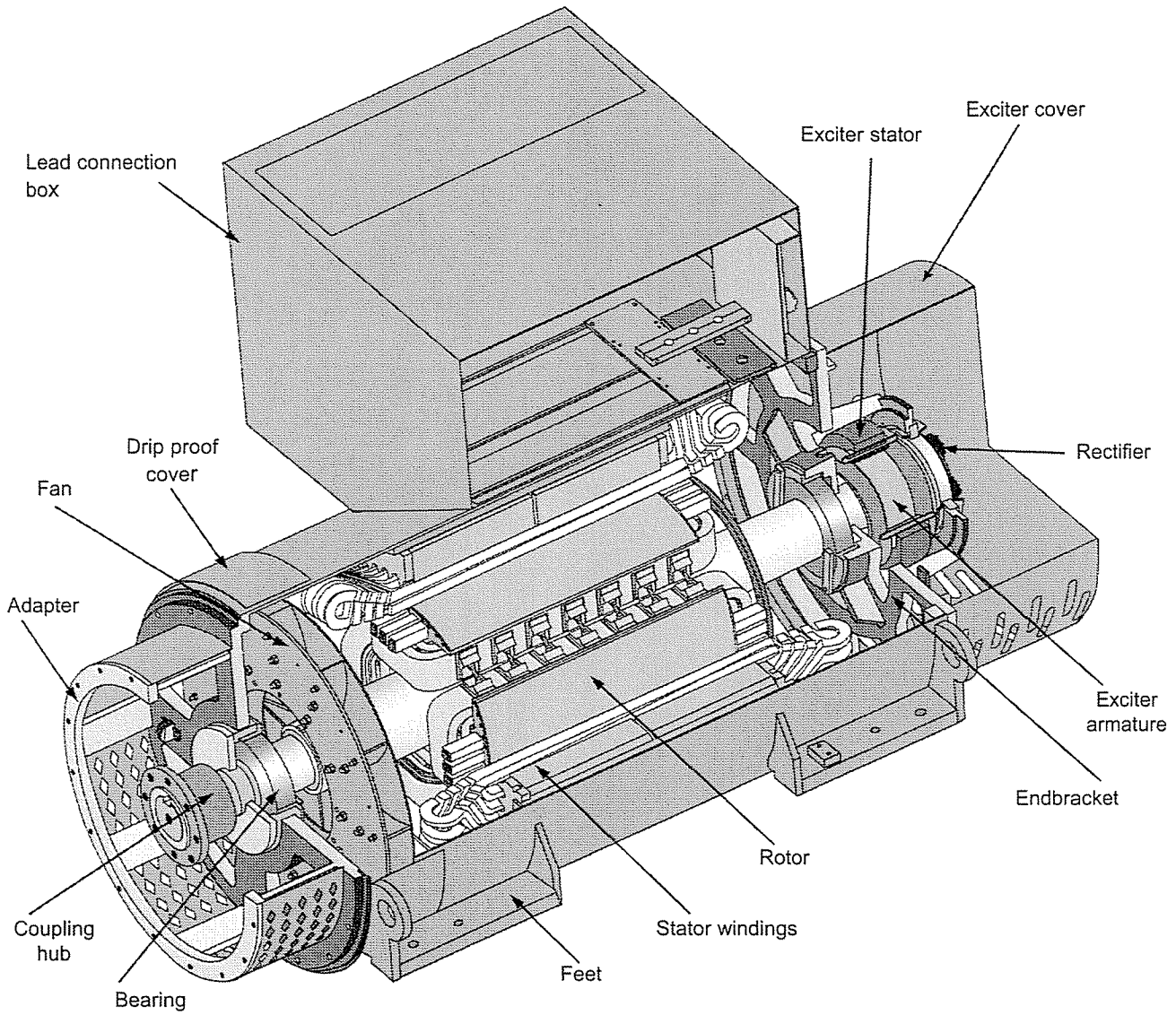

PUBLICATION NUMBER: **350-04002-00**
PUBLICATION DATE: **September 1981**

INSTRUCTION MANUAL

TWO BEARING KAMAG GENERATOR WITH OUTBOARD EXCITER

SERIAL NUMBER

INCLUDES
PRINCIPLES OF OPERATION
INSTALLATION INSTRUCTIONS
ADJUSTMENT AND OPERATING INSTRUCTIONS
MAINTENANCE AND TROUBLESHOOTING
DRAWINGS AND GENERAL INFORMATION

Safety Summary

WARNING

This equipment contains high speed (1800 RPM) rotating parts and develops lethal voltage (480 VAC or higher). Stop generator set before removing protective covers for the purpose of making electrical connections, installation, adjustments, inspection, troubleshooting, testing, repair, or parts replacement. Install protective covers before starting the generator set. Failure to observe this precaution can result in serious injury or electrocution.

WARNING

Where meters or test instruments are used for purpose of troubleshooting and testing, it is recommended the test equipment be placed external to the generator and the generator set be stopped while making or removing meter and instrument connections. Be sure protective covers are installed before running unit. Failure to observe this precaution can result in serious injury or electrocution.

WARNING

Do not lift complete generator set by means of lifting eye on generator. Disregarding these instructions may result in serious injury or equipment damage.

WARNING

Do not lift or pry on generator fan. Failure to observe this precaution can result in serious injury and equipment damage.

WARNING

Make certain that sufficient clearance exists between fan and stationary parts and make certain fan and fan hub bolts are torqued. Failure to observe this precaution can result in serious injury and equipment damage.

WARNING

When circuit breakers are not included with the generator, the terminals on the ends of the stator lead wires are not insulated. These terminals must be insulated before generator set is operated. Failure to observe this precaution can result in serious injury and equipment damage.

CAUTION

Do not push on rotating rectifier or exciter winding. Failure to observe this precaution can result in equipment damage.

Table of Contents

Section 1
General Information, Principles of Operation and Mechanical Construction

GENERAL 1-1
PRINCIPLES OF OPERATION 1-1
MECHANICAL CONSTRUCTION 1-1
Generator Frame and Stator 1-1
Generator Frame Cover 1-1
Generator Rotor Assembly 1-1
- A. Shaft
- B. Generator Field Poles
- C. Air Circulating Fan
- D. Bearings

Exciter Rotor 1-2
- A. Exciter Armature
- B. Rectifier

Exciter Field Assembly 1-3
Endbells 1-3
Terminal Box 1-3

Section 2
Receiving Inspection Handling Instructions and Storage

RECEIVING YOUR KAMAG GENERATOR 2-1
WINDING INSPECTION 2-1
UNPACKING 2-1
STORAGE 2-1

Section 3
Mounting and Aligning Generator Set

HANDLING 3-1
BASES AND BED PLATES 3-1
- A. Belted Generator Sets
- B. Flexible Coupled Generator Sets

EXCITER ALIGNMENT AND BEARING ENDCLEARANCE 3-1
Checking Bearing Endclearance 3-1
SELECTION OF DRIVES FOR TWO-BEARING GENERATOR 3-2
BELT DRIVES 3-2
- A. V-Belt
- B. Synchronous Belts

FLEXIBLE COUPLINGS 3-3
Aligning Flexible Couplings 3-3
- A. Checking Parallel (Shaft Offset) Alignment
- B. Checking Angular Alignment

Section 4
Electrical Connections

GENERAL 4-1
- A. Three-Phase Wye Connected Generator
- B. Three-Phase Delta Connected Generator
- C. Single Phase Three Wire
- D. Single Phase Two Wire
- E. Generator Frame Ground
- F. Exciter Field Lead Wires
- G. Voltage Regulator

Table of Contents (Cont.)

GENERAL 4-1
H. Voltage Regulator Fuse
I. Voltage Shutdown Switch
J. Field Circuit Breaker
K. Automatic/Manual Voltage Control
L. Space Heaters

Section 5
Operation

PRE-START INSPECTION 5-1
FIELD FLASHING 5-1
VOLTAGE ADJUSTMENTS 5-2
VOLTAGE RANGE ADJUST 5-2
STABILITY ADJUSTMENT 5-2
STARTING UP THE GENERATOR FOR SINGLE UNIT OPERATION 5-2

Section 6
Preventive Maintenance

INSPECTION 6-1
CLEANING 6-1

Section 7
Troubleshooting

GENERAL 7-1
TROUBLESHOOTING PROCEDURE 7-1
A. No Voltage
B. Low Voltage
C. High Voltage
D. Voltage Fluctuating

Section 8
Generator Tests

MEASURING EXCITER FIELD EXCITATION 8-1
TESTING EXCITER ROTATING RECTIFIER DIODES 8-1
TESTING ZENER DIODE SURGE SUPPRESSOR 8-2

MEASURING WINDING RESISTANCE 8-2
A. Measuring Exciter Field Winding Resistance
B. Measuring Generator Field Winding Resistance
C. Measuring Exciter Armature Winding Resistance
D. Generator Stator Winding Resistance
MEASURING WINDING INSULATION RESISTANCE 8-3
A. Measuring Generator Stator Winding Insulation Resistance
B. Measuring Generator Field Winding Insulation Resistance
C. Measuring Exciter Field Winding Insulation Resistance
D. Measuring Exciter Armature Winding Insulation Resistance

Section 9
Drying Windings and Removing and Installing Parts

DRYING GENERATOR 9-1
A. Heated Enclosure
B. Forced Air
C. Oven
REMOVING AND INSTALLING EXCITER ROTOR 9-1
A. Removing Exciter Rotor
B. Installing Exciter Rotor
REMOVING AND INSTALLING TERMINAL BOX AND OUTBOARD ENDBELL 9-2
A. Removing Terminal Box and Outboard Endbell
B. Installing Terminal Box and Outboard Endbell
REMOVING AND INSTALLING DRIVE ENDBELL 9-2
A. Removing Drive Endbell
B. Installing Drive Endbell
REMOVING AND INSTALLING BEARING 9-4
REMOVING AND INSTALLING GENERATOR FAN 9-5
A. Removing Fan
B. Installing Fan
REMOVING AND INSTALLING GENERATOR ROTOR 9-5
A. Removing Rotor
B. Installing Rotor

Section 10
Tables and Figures

GENERAL 10-1
Table 1 Generator Voltage Standard Kamag Generators 10-1
Table 2 Minimum Air Gap for Kato Brushless Exciter 10-1
Table 3 Recommended Torque SAE 5 Steel and SAE 8 Steel Cap Screws 10-2

Figure 1 Two Bearing Kamag Generator with Outboard Exciter 10-3
Figure 2 Exciter Rotor Installation 10-4
Figure 3 Rotating Rectifier 10-4
Figure 4 Coupling — Parallel Alignment 10-5
Figure 5 Coupling — Angular Alignment 10-5
Figure 6 Twelve Wire Generator Stator Lead Wire Connection Diagram 10-6
Figure 7 Exciter and Generator Field Interconnection 10-7
Figure 8 Field Excitation Measurement Meter Connection Diagram 10-7

SECTION 1
GENERAL INFORMATION, PRINCIPLES OF OPERATION AND MECHANICAL CONSTRUCTION

GENERAL

KAMAG AC generators are brushless 4-pole machines producing 60 Hz power at 1800 rpm or 50 Hz power at 1500 rpm. The generators are of the revolving field type, having rotating field poles called the rotor and a stationary armature called the stator. All standard units are broad voltage range machines that have twelve lead wires brought out from the stator coil groups. This feature permits connection of the stator winding in either three-phase wye, three-phase delta, or single-phase configuration. Table 1 lists the voltages that can be obtained from the output of KAMAG generators.

Two bearing generators have a rotor shaft that extends beyond the driven end of the generator for mounting sheaves or a flexible drive coupling.

Drawings and tables are contained in Section 10 in this manual.

The major parts comprising the KAMAG generator are shown on Figure 1. Figure 7 is an electrical schematic of the generator field and exciter. The twelve stator lead wires and respective stator coil groups are shown on Figure 6 .

PRINCIPLES OF OPERATION

Ac generators require direct current flowing through the field winding to set up the magnetic flux which generates ac power in the stator winding. An exciter, which is a small ac generator with rectified output, provides this direct current. While the generator armature is stationary and the field rotates, the exciter field is stationary and the armature and rectifier rotate.

The exciter itself requires direct current for excitation. This excitation may be provided by any dc power supply that provides the proper excitation. However, in order to keep the generator output voltage relatively constant, the dc excitation must be automatically regulated by means of a voltage regulator.

The voltage regulator provides regulated dc excitation. This device measures the generator voltage and compares the measured voltage with a pre-set voltage established by adjustment of a voltage adjust potentiometer or rheostat. It then uses the result of the comparative process to automatically control the excitation supplied to the exciter field winding. This action in turn regulates the excitation applied to the generator field winding, which controls the magnetic flux and thereby the ac power generated by the generator stator winding.

The voltage regulator requires electrical power for operation of its circuitry. Usually a portion of the power generated by the generator is used to power the voltage regulator.

MECHANICAL CONSTRUCTION

The major parts comprising the KAMAG generator are shown in Figure 1 and described in the paragraphs that follow.

Generator Frame and Stator

Rectangular steel bars welded to endrings provide rigid support for the stator, the generator endbell, and the adapter. Weldments rigidly secure the stator to the frame bars.

The stator core is composed of a stack of thin, notched electrical steel laminations assembled under pressure and welded to the frame bars. The semi-closed notched slots are Class F insulated; random wound coils are firmly wedged in the insulated slots. The stator coils in KAMAG generators are connected in three-phase groups with twelve lead wires that terminate within the terminal box. Stator wire connections are insulated and the entire stator is then impregnated with thermo-setting 100 percent solid bonding epoxy and baked under a controlled cycle. This process minimizes voids and ensures high dielectric strength and excellent moisture resistance.

Generator Frame Cover

A removable sheet metal cover encloses the generator frame.

Generator Rotor Assembly

A precision machined steel shaft, the four-pole rotating field, the exciter armature and the rotating rectifier comprise the rotor assembly. Also mounted on the shaft and provided with a replacement rotor are the drive hub and the generator bearing. A two-section fan mounts on the rotor at the adapter end of the generator.

Katolight Service - Master Repair Manual - Page 698

The rotor is dynamically balanced at the factory. Rotor balance is attained by mounting weights on rings located at the front and back of the field poles.

A. Shaft

The rotor shaft includes a keyway and key at the drive end for mounting the drive sheaves or flexible coupling, a keyway and key for mounting the rotor field core, and a keyway and key for mounting the exciter armature and rotating rectifier.

B. Generator Field Poles

The four poles which carry the field windings are comprised of a stack of one-piece electrical steel laminations press-fitted together using a hydraulic press. Copper rods of the amortisseur winding are pressed into circular holes through the pole head portion of the core structure and welded to copper end plates that form the front and back section of the assembled field core structure. The field core structure is pressed on the shaft using a high pressure hydraulic press and keyed, forming a rigid rotating element. Round steel studs are pressed into each pole head for attachment of rotor balance rings at the front and back section of the field assembly.

Heavily insulated series-connected field coils are wound about the four poles. A support block made of insulating material provides coil support at the bottom and top of the field coil. Two lead wires are brought out to the rotating rectifier.

A thermo-setting epoxy is applied to the completed generator field assembly and the field assembly is baked under a controlled cycle to ensure high dielectric strength and mechanical strength.

C. Air Circulating Fan

The fan consists of two half-sections that clamp together and are held securely in place on the shaft by two steel bolts. The fan mounts at the drive end of the generator between the drive hub and the generator field poles.

Ambient air is drawn into the outboard end of the generator, and passes over the exciter, across the outside of the generator stator windings and stator laminations, and through the air gap between the generator stator and field poles. This circulation of air removes heat from the windings and laminations. The cooling fan exhausts the heated air from the generator.

D. Bearings

Two bearing KAMAG generators have duty-selected shielded ball bearings that are factory packed with lubricating grease. A machined housing at the center of the endbell located at the exciter end ofuhe machine supports the outer race of the outboard bearing. The machined bearing housing at the center of the adapter at the driven end of the generator supports the bearing located at the driven end of the generator. Bearing inner races are interference fit onto bearing journals machined on the generator shaft.

Exciter Rotor

The exciter rotor consists of the exciter armature wound with a three-phase winding and a full-wave rotating rectifier. Three-lead wires, one from each phase of the exciter armature winding, connect to the rectifier diodes as shown on Figure 7. The direct current from the rotating rectifier is conducted to the generator field through lead wires.

Two bolts mount the rectifier assembly to the exciter armature core structure. The entire exciter rotor unit slides over the generator shaft and is held in place by a rectangular key located in the shaft keyway and a retaining bolt and washer at the outboard end of the shaft as shown on Figure 2.

A. Exciter Armature

The exciter armature core structure is comprised of a stack of thin, notched, one-piece laminations held assembled under pressure and kept compressed and aligned by steel rivets through the stack of laminations. The semi-closed slots are insulated with Class F insulation, and the coils of the three-phase exciter armature winding are then securely wedged in the slots. The entire exciter armature is completely impregnated with thermo-setting epoxy and baked under a controlled cycle. Three lead wires, one from each phase of the exciter armature winding, connect to the rotating rectifier as shown on Figure 7.

B. Rectifier

The exciter armature three-phase ac output is applied to a full-wave rectifier comprised of a positive heat sink, a negative heat sink, a molded insulating plate, a metal plate, three forward polarity diodes, three reverse polarity diodes, a forward polarity zener diode, and a reverse polarity zener diode. The heat sinks are molded onto the insulating plate. The three forward polarity diodes and the forward polarity zener diodes mount on the positive heat sink, while the three reverse polarity diodes and the reverse polarity

zener diode mount on the negative heat sink. A generator field lead wire attaches to the positive heat sink while the second generator field lead attaches to the negative heat sink. This rectifier output circuit provides excitation to the series-connected generator field winding. Three wires, one from each phase of the exciter armature winding, attach to the diodes as shown in Figure 7. The complete rectifier assembly is held in place on the exciter armature by two bolts.

Exciter Field Assembly

The exciter field core structure is comprised of a stack of thin, notched electrical steel laminations that are held axially and tangentially aligned by a weldment across the stack of laminations. The steel laminations are of the type that retain residual magnetism. This residual magnetism produces a magnetic field which, when the generator is started, induces current in the exciter armature, providing the generator field with sufficient dc excitation for generator voltage build-up.

The slots in the exciter field core structure are insulated with Class F insulation and the coils are then firmly wedged in the slots. The coils are series connected; lead wires are brought out for connection to the voltage regulator dc output. The entire exciter field assembly is completely impregnated with thermo-setting epoxy and baked under a controlled cycle. Bolts that pass through holes in the exciter field core structure and thread into tapped holes in the bosses located on the generator endbell provide rigid mounting and ensure concentric alignment.

Endbells

Cast iron endbells enclose the outboard and driven ends of the generator. Precision machined matching pilot and recess on the endbell and generator frame endring ensure concentric alignment with the generator frame. The endbells are rigidly secured to the frame by bolts that pass through holes in the endbell and thread into tapped holes in the frame endring. A machined bearing housing at the center of the endbell supports the outer race of the generator bearing. The outboard endbell includes bosses with tapped holes which provide mounting for the exciter field assembly.

Terminal Box

KAMAG generators include a large terminal box with ample room inside for the voltage regulator, most circuit breakers, and other options. The twelve generator stator lead wires and the exciter field leads terminate within the terminal box. The terminal box mounts on the outboard end of the generator.

SECTION 2
RECEIVING, INSPECTION, HANDLING INSTRUCTIONS AND STORAGE

RECEIVING YOUR KAMAG GENERATOR

Upon receipt of the generator it is recommended that it be carefully examined to determine if any shipping damage has occurred before accepting the shipment from the transportation company.

Generators received during freezing weather should be slowly warmed to prevent condensation of moisture on the windings.

WINDING INSPECTION

Winding inspection prior to operating the generator is recommended. If moisture is observed or condensation of moisture on the windings is suspected, a test of the stator winding insulation resistance should be made. If the result is less than the minimum value, the generator should be dried out.

Insulation resistance of the stator winding in the KAMAG generator should not be less than 1.48 megohms when calculated by the formula that follows.

$$\text{Minimum Winding Insulation Resistance in Megohms} = \frac{\text{Rated Voltage of Generator}}{1000} + 1$$

UNPACKING

Unpack the generator carefully. Make certain that foreign material such as crating nails and packing material does not enter the generator. Read all instruction cards and keep all instructions, drawings, and test cards with the generator as this information will be required by personnel when installing, operating, and servicing the equipment.

When lifting your KAMAG generator, attach an overhead crane to the lifting eye(s) located on the generator frame. Apply lifting force in a vertical direction if possible. Make certain that crane, lifting cables, and other hardware used is of sufficient strength to safely lift the weight of the generator. Generator weight may be determined by referring to the weight given on the shipment bill of lading.

WARNING

Do not lift complete generator set by means of lifting eye(s) on generator. Disregarding these instructions may result in serious injury or equipment damage.

WARNING

Do not apply any lifting force to generator fan for lifting or turning generator rotor. Failure to observe this instruction may result in serious injury or equipment damage.

STORAGE

When the generator will not be installed immediately it is recommended that it be stored in a clean, dry area which is not subject to rapid changes in temperature and humidity.

When storage will be for a period of six months or longer it is recommended the unit be wrapped with a thin water proof protective covering, and that a moisture absorbing agent such as bags of silica jel be placed within the covering.

SECTION 3
MOUNTING AND ALIGNING GENERATOR SET

HANDLING

A lifting eye is provided on top of the generator frame. The generator may be moved into position on the generator set base by means of an overhead hoist. Apply lifting force in vertical direction. Avoid applying angular force on the lifting eye.

WARNING

Lift vertically only. Angular force increases tension in hoist cable and applies shear force on lifting eye. Excessive angular force can result in breakage of cable or lifting eye which could cause serious injury and equipment damage.

After the generator and prime mover have been mounted on a single base, any further transporting or handling of the entire assembly must be made by using the lifting fixture provided on the base.

WARNING

Do not use generator lifting eye to lift entire generator set comprised of generator base and prime mover. Failure to observe this warning can result in serious injury and equipment damage.

BASES AND BED PLATES

A. Belted Generator Sets

Belt driven generator and its prime mover may be solidly mounted on a single base, separate bases, bed plates, or mounted directly on a level foundation.

In applications where vibration isolators are required, both the generator and its prime mover must be mounted on a single base of rigid construction with vibration isolators installed between the base and foundation.

B. Flexible Coupled Generator Sets

Where application requires that the generator and prime mover shafts be coupled with flexible couplings, both the generator and its prime mover must be mounted on a single base. Vibration isolators may be installed between the base and foundation.

Bases selected for flexible coupled operation must not twist or bend during mounting or operation of the generator set because maintaining alignment of the flexible coupling is important for maximum coupling life, maximum bearing life and minimizing vibration.

EXCITER ALIGNMENT AND BEARING ENDCLEARANCE

The generator is provided with factory lubricated shielded anti-friction ball bearings. Excessive thrust load will shorten bearing life and increase noise and vibration. In order to avoid thrust loading of the bearing, clearance should exist between the bearing and machined end of the bearing housing. Before coupling the generator to the prime mover, check to made certain bearing endclearance is correct. In applications where generator is driven through flexible coupling, care should be taken to make sure generator shaft is not pulled out of alignment while coupling and aligning the generator set.

Excessive axial misalignment of the exciter can result in lower than normal generator field excitation. This can result in excessive exciter field current under all loads from no-load to full load and lower than normal generator voltage when operating with load applied. Exciter alignment should be checked before coupling the generator to the prime mover and again after the generator has been coupled and aligned.

The rotor in KAMAG two bearing generators should have unrestrained axial travel from 1/16 inch to 3/32

inch. Each bearing in the two bearing KAMAG generator should have 1/32 inch to 3/64 inch endclearance. Check may be made by measuring length of shaft at driven end of generator as follows:

1. Pull rotor forward (towards drive end) until it stops. Front bearing will now have zero endclearance.
2. Measure length of shaft that extends beyond drive endbell.
3. Push rotor back until it stops. Rear bearing will now have zero endclearance.
4. Again measure length of shaft that extends beyond drive endbell.
5. Compute total rotor travel. Shaft length measured during step 2 minus shaft length measured during step 4 equals total rotor travel.
6. Compute one-half total rotor travel.
7. Pull rotor forward the distance determined during step 6. Rotor should be centered and each bearing should have correct endclearance.
8. Measure and record length of shaft that protrudes beyond drive endbell. This measurement should be used to determine that rotor has remained aligned during coupling and alignment of the generator set and also after generator set has been operated.
9. Check to make certain exciter is satisfactorily aligned. Axial misalignment between the exciter field core and exciter armature core should not exceed 0.125 inch.
10. After generator set is mounted, coupled, and aligned, check exciter alignment and verify that the length of shaft that extends beyond drive endbell is the same as that measured during step 8.

SELECTION OF DRIVES FOR TWO-BEARING GENERATOR

Satisfactory generator operation will depend upon intelligent selection of drive couplings. In general, solid couplings are not recommended except when the generator and prime mover frames are directly connected. Belt drives should not be used when belt speed exceeds 5000 feet per minute.

BELT DRIVES

Proper alignment and tightness of belt drives is essential. Improper alignment and belt tightness will increase belt wear as well as bearing load and vibration. Select belt drive in accordance with belt manufacturer's specifications. Make certain generator and prime mover are rigidly mounted. In general, belt drives are not recommended when belt speed exceeds 5000 feet per minute.

A. V-BELT

Use only matched belt sets and avoid minimum pitch sheaves and belts. Follow the manufacturer's specifications of NEMA limits for sheave pitch.

Make certain the shaft axis of the prime mover and generator are parallel. Belts must enter and leave sheaves with no side bending. Tighten just enough to prevent slippage at full load. Never grease or use belt dressing on belts.

B. SYNCHRONOUS BELTS

Synchronous belts have evenly spaced teeth on the bottom surface that mesh with grooves on the pulleys. In general, installation of synchronous belts will be the same as for flat belts. The following precautions should be taken when installing a synchronous belt drive.

1. Belts should be installed with snug fit, neither too tight nor too loose. High initial tension is not necessary but when torque is unusually high, a loose belt may "jump grooves". If the belt jumps the grooves the tension should be increased gradually until satisfactory operation is attained.
2. Be sure that shafts are parallel and pulleys are in alignment. On a long center drive, because of the tendency of the belt to run against the flange, it is sometimes advisable to offset the driven pulley to compensate.
3. On a long center drive, it is imperative that belt sag is not enough to permit teeth on the slack side to engage the teeth at the tight side.
4. It is important that both prime mover and generator are mounted rigidly to prevent variation in belt tension.
5. Although belt tension requires little attention after initial installation, provision should be made for some center distance adjustment for ease in installing and removing belt. Do not force belt over flange of pulley.

FLEXIBLE COUPLINGS

In applications where these types are used instead of belt drives, the generator and prime mover must be solidly mounted on a rigid base and shafts must be carefully aligned. Prior to installing the coupling half-sections the generator and prime mover shafts should be adjusted to a position that provides bearing end clearance; they should be carefully maintained at that position while mounting and coupling the units. When mounting the units and installing coupling half-sections, be sure to maintain clearance between shaft ends and check the generator exciter axial alignment. Where base mounts solidly to foundation, care should be taken to ensure foundation is level because mounting base to an uneven foundation could twist or bend base and cause coupling misalignment.

In application where vibration isolators are installed between the base and foundation, care should be taken to make certain base will support the weight and torsional load without bending or twisting.

ALIGNING FLEXIBLE COUPLINGS

Where flexible coupling drives are used, the generator and prime mover shaft centers must be in line. This is done by checking parallel or shaft offset alignment and angular alignment. Recommended method is given in the procedures that follow.

To correct alignment, shims may be installed between the generator mounting feet and the base and the prime mover mounting feet and the base. Alignment should be checked while mounting and coupling the generator set, then checked again after the generator set has been completely coupled and mounted on the base and the base has been installed on the foundation. Parallel and angular alignment tests may be done consecutively using one dial indicator, or simultaneously when two dial indicators are used.

A. Checking Parallel (Shaft Offset) Alignment

1. Mount dial indicator as shown in Figure 4. Where sufficient space exists, dial indicator may be mounted as shown in Figure 4(a). In applications where coupling halves are close together or when coupling is slightly out-of-round and not concentric with respect to the shaft centerline, fabricate rigid brackets and install brackets and dial indicator as shown in Figure 4(b).
2. Turn shafts simultaneously through one complete revolution observing dial indicator as shafts are turned.
3. Shafts should not be offset more than .002 inch total indicator reading (T.I.R.).
4. If offset is more than .002 inch T.I.R., install shims under generator or prime mover mounting feet, secure mounting bolts and again test alignment.
5. Repeat steps 2 through 4 until shaft offset is .002 inch or less.
6. Retest parallel (shaft offset) and angular alignment after coupling has been completely assembled, generator set mounting bolts have been tightened, and base has been secured to foundation. Mount dial indicator (or when used, "L" brackets) on outer surface of coupling hubs or on the shafts.
7. If T.I.R. exceeds .002 inch, check to make certain generator set base is level and has not twisted or bent. One or more of the following steps may be necessary:
   a. Level foundation.
   b. Place shim between base and foundation.
   c. Strengthen base.

B. Checking Angular Alignment

1. Mount dial indicator as shown in Figure 5. Where sufficient space exists, dial indicator may be mounted as shown in Figure 5(a). In applications where coupling halves are close together or coupling face run-out exists,fabricate rigid brackets and install brackets and dial indicator as shown in Figure 5(b).
2. Turn shafts simultaneously through one complete revolution, observing dial indicator as shafts are turned.
3. Total indicator reading (T.I.R.) should not exceed .001 inch per inch of radius from shaft center.
4. Correct excessive angular misalignment either by turning the generator or prime mover on the base until shafts are aligned, or by installing shims between mounting pads and the base.
5. Repeat steps 2 through 4 until satisfactory angular alignment is attained.

6. Retest angular and parallel alignment after coupling has been completely assembled, generator set mounting bolts have been tightened, and base has been secured to foundation. Measure by installing dial indicator across outside of coupling or, where "L" brackets are used, mount brackets on shafts as close to the coupling as possible.
7. If excessive shaft offset or angular misalignment exists, check to make certain base has not bent or twisted. One of the following may be necessary.
    a. Level foundation.
    b. Place shim between base and foundation.
    c. Strengthen base.

SECTION 4
ELECTRICAL CONNECTIONS

GENERAL

KAMAG generators have twelve stator lead wires that terminate within the terminal box. The two lead wires from the exciter field winding also terminate within the terminal box.

The generator may be connected three-phase series wye, three-phase parallel wye, three-phase series delta, three-phase parallel delta or single phase. The units may be operated 60 Hertz, 1800 rpm or 50 Hertz, 1500 rpm. The voltage regulating system voltage control rheostat permits adjustment of generator output voltage.

Voltage generated when stator lead wires are connected in one of the configurations described above is listed in Table 1. Select the hookup that will provide the appropriate voltage. Be sure to connect the generator stator, load lines and voltage regulator as shown in the wiring diagram provided with the generator. Observe the general precautions that follow.

A. Three-Phase Wye Connected Generator

For a 4-wire system the neutral line may be brought out to the load distribution system. Where electrical code requires system ground, be sure the neutral leg is electrically connected to ground stud or ground wire.

B. Three-Phase Delta Connected Generator

Where generator is connected 3-wire delta, the stator connection neutral should not be connected to the ground stud and load lines do not contain a neutral line. The load conductors (phase A, B, and C) should not be grounded.

C. Single Phase Three Wire

Neutral (N) and two load conductors (L1 and L2) are contained in the load distribution system. Where electrical code requires system ground, neutral leg may be grounded.

D. Single Phase Two Wire

Two load conductors connect to the load distribution system. In single phase two wire 200-240 VAC applications where generator neutral is grounded, the two load conductors must not be grounded.

E. Generator Frame Ground

Generator frame should be connected to an earth ground in accordance with electrical code. Ground wire must be connected to the generator ground stud located above the left mounting foot.

F. Exciter Field Lead Wires

Exciter field lead wires F+ and F- connect to the voltage regulator output terminals F+ and F-. Be sure to maintain polarity. THIS CIRCUIT MUST NOT BE EITHER GROUNDED OR OPENED WHILE GENERATOR IS RUNNING.

G. Voltage Regulator

Refer to the voltage regulator instruction manual and the wiring diagram provided with the generator set. Make certain all internal and external connections are correct before operating the generator set.

CAUTION

Incorrect electrical connection of the voltage regulator can result in immediate equipment damage.

H. Voltage Regulator Fuse

This fuse protects the voltage regulator circuitry.

In applications where the generator set does not include a field circuit breaker it is recommended that a 1 1/2 ampere normal blow fuse be used in the voltage regulator. This is to protect the KAMAG generator against excessive voltage due to loss of sensing and excessive field forcing.

I. Voltage Shutdown Switch (Engine Idle Switch)

Where this accessory is provided, connect as described in the voltage regulator instruction manual and generator set wiring diagram.

J. Field Circuit Breaker

Where this accessory is provided, connect as described in the voltage regulator instruction manual and the generator set wiring diagram.

K. Automatic/Manual Voltage Control

Where this accessory is provided, connect as described in the voltage regulator instruction manual and the generator set wiring diagram.

L. Space Heaters

Where this accessory is provided, connect as described on the generator set wiring diagram.

SECTION 5
OPERATION

PRE-START INSPECTION

Before operating the generator for the first time, the following checks are recommended.

WARNING

When circuit breakers are not included with the generator, the terminals on the ends of the stator lead wires are not insulated. These terminals must be insulated before generator set is operated. Failure to observe this precaution can result in serious injury and equipment damage.

1. Make certain generator set base is level. Check to make sure bolts that mount the generator and prime mover onto the base are tight. Refer to procedure given in Section 3.
2. On belted generator set, make certain drive sheaves are aligned and belts do not have excessive slack. Where variable sheaves are used, check to make certain sheaves are adjusted to provide correct rpm. Check rpm with tachometer during initial startup of the unit.
3. On flexible coupled generator set, make sure coupling is aligned and generator bearings have end clearance. Refer to procedure given in Section 3.
4. Check to make sure fan bolts are tight and space exists between the fan and stator windings. Check to make sure exciter retaining bolt is tight.
5. Check all wiring against the proper connection diagrams and make sure all connections are properly insulated.
6. Inspect to make sure all packing materials and shipping support blocking has been removed. Remove loose cloths and tools.
7. Install covers and guards.

FIELD FLASHING

The generator relies on residual voltage to start the generator action which in turn generates the rated voltage. If the generator fails to generate voltage after it has come up to rated speed, it may be necessary to flash the exciter field. Field flashing must be done while the generator is at a standstill as described in the procedure that follows.

1. Stop the engine and open the output circuit breaker.

CAUTION

Be sure to maintain polarity (+) to (F+) and (-) to (F-).

2. Connect the negative lead (-) from a common 12 volt storage battery onto exciter field lead F-.
3. Connect the positive lead (+) from the battery onto exciter field lead F+. Only a few seconds flashing should be necessary.
4. Remove battery and connect exciter field leads onto voltage regulator terminals F+ and F-. Be sure to maintain correct polarity.
5. Start generator and check for satisfactory voltage build up.

VOLTAGE ADJUSTMENTS

A means for adjusting the voltage is incorporated in the regulator. For details refer to the voltage regulator instruction manual applicable for this unit.

VOLTAGE RANGE ADJUST

This control is incorporated in most voltage regulators. For details refer to the voltage regulator instruction manual applicable for this unit.

STARTING UP THE GENERATOR FOR SINGLE UNIT OPERATION

The following procedures should be followed for starting up the generator set.

1. The generator output must be disconnected from the load. Be sure the main circuit breaker is open.
2. If fuses have been removed, install the fuses.
3. Where generator set is equipped with field circuit breaker, set breaker to ON.
4. Where generator set is equipped with voltage shutdown switch, set switch to RUN position.
5. Where generator set is equipped with Automatic/Manual control, set switch to AUTO position.
6. Where space heaters have been supplied with the generator set, turn off the heater before operating the generator.
7. Where generator sets are equipped for parallel operation and include UNIT/PARALLEL switches, set switch to UNIT position whenever generator is operated singly.
8. Start generator set and bring to rated speed. Adjust voltage to required value by means of the voltage adjust rheostat.
9. Close the main circuit breaker and apply load.
10. Before stopping the generator set, remove the load by tripping the main circuit breaker.

SECTION 6
PREVENTIVE MAINTENANCE

INSPECTION

To ensure peak performance and maximum service life, the generator must be kept in good condition. This can best be ensured by periodic inspection of the unit and immediate repair of minor problems. The preventive maintenance inspection schedule that follows is enclosed as a guide for establishing a preventive maintenance program.

A. Daily or Whenever Generator is Operated

1. Before starting generator be sure air inlet and air exhaust screens are not clogged.
2. On belt driven generator application, check drive belts for wear and correct tension.
3. While generator is running be sure voltage is correct and not oscillating.
4. While generator is running observe any unusual noise or vibration.

B. Once Every Six Months

1. Remove terminal box cover and inspect wiring for signs of damaged insulation and loose or corroded connections. Repair damaged wiring; clean and tighten connections.
2. Inspect control devices for accumulation of dust, moisture or other foreign material. Clean using nylon bristle brush or compressed air at pressure between 25 PSI and 50 PSI.
3. Inspect to make certain that bolts which mount the voltage regulator, circuit breakers, meters, etc. have not loosened. Tighten as necessary.
4. Remove or loosen cover that surrounds generator frame. Inspect inside of generator frame. Inspect inside of generator for signs of damaged winding insulation and excessive dirt or moisture. Inspect to make certain bolts are tight.
5. Check to make sure generator set base is level. Check to make certain generator and its prime mover are solidly mounted on base.
6. On belted generator set applications, check belts for general condition and proper tightness (see Section 3).
7. On flexible coupled generator set applications, check coupling alignment (see Section 3). Where coupling is grease lubricated, lubricate coupling in accordance with the coupling manufacturer's instructions.

CLEANING

A. Controls

Clean using nylon bristle brush or compressed air at pressure between 25 PSI and 50 PSI.

B. Generator

Wipe exterior of generator and air intake and exhaust with cloth or nylon bristle brush. Clean loose dust or other abrasive material from generator interior using compressed air at pressure between 25 PSI and 50 PSI.

SECTION 7
TROUBLESHOOTING

GENERAL

Loose, corroded, or broken connections and wiring errors are often the cause of generator malfunction. Before assuming problem is within the generator or voltage regulator, check condition of wiring and terminal connections and verify wiring according to wiring diagrams provided with the generator set.

TROUBLESHOOTING PROCEDURE

The troubleshooting information that follows is divided by symptoms. They are: no voltage, low voltage, high voltage, and voltage fluctuating.

Observe the safety precautions in the Safety Summary at the front of this manual before operating, testing or making repairs to this equipment.

A. No Voltage

1. Shut down the generator set.
2. Remove terminal box cover and check generator leads and interwiring to the voltage regulator for loose or broken connections.
3. Check regulator fuses with ohmmeter. If defective, replace.
4. Start up generator. Measure ac voltage at input power terminals on the voltage regulator. The voltmeter reading should exceed 7 vac. If it does not, field flashing is required. Refer to field flashing procedure in Section 5 of this manual.
5. Where voltage reading before or after field flashing exceeds 7 vac but output voltage fails to build-up, shut down the generator set. Then proceed as described to either step 6 or steps 7 and 8 that follow.
6. Connect meters as shown in Figure 8. Then start generator set and measure exciter field excitation as described in Section 8.
7. Shut down the generator set. Disconnect voltage regulator by removing the voltage regulator fuse. Where regulator does not include fuse, disconnect voltage regulator by removing the connections to the regulator input power terminals. Insulate terminal lugs on wires to prevent grounding during test described in step 8 that follows.
8. Disconnect wires F+ and F- from regulator output terminals F+ and F-. Connect a common 12 volt storage battery to wires F+ and F-, keeping the polarity the same. Start up the generator set. While the generator is operating at a rated speed, read the voltage output of the generator measured by a voltmeter. If the reading is one-half or greater of the rated output when there is no load on the generator, the problem is in the voltage regulator. If the voltage remains near zero, the voltage regulator is good, and the problem is most likely within the exciter or generator. Shut down the generator. Reconnect the voltage regulator and proceed to step 9.
9. Remove cover located on end of terminal box. Examine the rectifier diodes for loose or broken connections. Proceed to step 10.
10. Test the generator exciter rotating rectifier diodes as described in the procedure contained in Section 8. Refer to Figures 3 and 7. Install diodes as described in Section 9 and then reconnect generator field leads.
11. Test zener diode surge suppressor as described in Section 8. Reverse polarity zener diode is located on the exciter rectifier negative heat sink, while the rectifier positive heat sink mounts a forward polarity zener diode. Part location and electrical connections are shown on Figures 3 and 7. Install and torque zener diode 15 inch-lbs. Connect zener diodes together and connect generator field leads (see Figure 3). If above test indicates zener diodes were good, proceed to step 12.
12. Check windings for continuity as described in the winding resistance test procedure contained in Section 8. If opens or shorts are found in the exciter stator or exciter armature, replace the necessary component. If the condition is found in the generator stator or the generator rotor field winding, major repair or generator replacement is probably required.
13. Connect wiring in accordance with wiring diagram(s) provided with the generator set.

Katolight Service - Master Repair Manual - Page 711

B. Low Voltage

1. Test using auxiliary voltmeter connected at generator load leads.
2. Shut down the generator set.
3. Remove cover located at end of terminal box. Check main generator leads and wiring to the voltage regulator for correct connection. Make certain that connections are tight and not corroded.
4. Start up the generator set. Verify correct speed (1800 rpm for 60 hertz and 1500 rpm for 50 hertz).
5. Be sure the voltage adjust rheostat is adjusted as necessary to increase generator voltage.
6. Adjust the voltage range potentiometer clockwise to increase generator voltage.
7. Where voltage is normal with no-load applied but drops with load applied, make certain load does not exceed nameplate capacity. Verify using clamp-on ammeter on the generator load lines. Current in any line must not exceed nameplate amps.
8. Shut down the generator set and open the output circuit breaker.
9. Check wiring to the voltage regulator sensing and input power terminals. Where voltage regulator has multi-tap sensing transformer, make certain connections to the transformer are correct. Where voltage regulator has different internal connections for 60 hertz and 50 hertz operation, verify connections are correct. Where voltage regulator is of the series boost saturable transformer type, verify that boost winding is connected correctly. Refer to the voltage regulator instructions and the wiring diagrams provided with the generator set. Where connections are found to be correct, proceed as follows.
10. Continue by testing either field excitation as described in step 11 or test using battery as described in steps 12 through 14.
11. Connect meters as shown in Figure 8. Then start generator set and measure exciter field excitation as described in Section 8.
12. Disconnect the voltage regulator by removing wires at the regulator input power terminals and the regulator output terminals F+ and F-. Tape ends of input power wires to prevent accidental ground or short during the test described in step 11.
13. Connect a common 12 volt storage battery to exciter field lead wires F+ and F-, keeping the polarity the same. Start up the generator set. While the generator is running at rated speed, read the voltage output. If the reading is one-half or greater when there is no-load on the generator, the problem is in the voltage regulator. If the reading remains near zero, the problem is most likely within the exciter or generator.
14. Shut down the generator set. Remove battery and reconnect voltage regulator determined to be in good condition. If preceding test indicated that the problem was within the exciter or generator, test as described in the steps that follow.
15. Remove the cover located on end of terminal box. Examine the rotating rectifier diodes for loose or broken connections. If connections are good, proceed to step 16.
16. Test rotating rectifier diodes using an ohmmeter as described in Section 8. If one reading is high and the other is low, the diode is good. A shorted diode will have very low resistance in both forward and reverse polarity while an open circuited diode will exhibit high resistance in both forward and reverse polarity. Install good or replacement diodes as described in Section 9. Connect generator field leads.
17. Test zener diode surge suppressors as described in the procedure contained in Section 8. Install, torque, and wire zener diode surge suppressors as described in Section 9. Reconnect generator field leads. If test indicated zener diodes were good, proceed to step 18.
18. Check windings for continuity as described in the winding resistance test procedures contained in this manual. If opens or shorts are found in the exciter stator or exciter armature, replace the necessary component. If the condition is found in the generator stator or rotor, major repair or generator replacement is probably required.

C. High Voltage

1. Verify by testing with an auxiliary voltmeter at the generator load lines.
2. Be sure the voltage adjust rheostat is adjusted as necessary to reduce voltage.
3. Adjust the voltage range potentiometer in the voltage regulator counter-clockwise to reduce voltage.
4. Shut down the generator set and open the generator output circuit breaker.
5. Remove terminal box cover and check generator set wiring for correct connection.

6. Check wiring to the voltage regulator sensing and input power terminals for correct connection. Check voltage regulator sensing transformer for correct connection. Where voltage regulator includes different internal connections for 50 Hertz or 60 Hertz, verify that connections are correct. Where voltage regulator is of the type that has boost transformer or winding, verify that connections are correct. Refer to the wiring diagrams provided with the generator set and the voltage regulator instructions.

D. Voltage Fluctuating

1. Verify generator voltmeter performance using auxiliary voltmeter at generator lines.
2. Verify with a tachometer to ensure stable speed.
3. Where generator is providing power to SCR type load, transient voltage spikes during SCR switching can cause voltage to fluctuate. If this is the case, set stability adjust for slower regulator response.
4. Adjust voltage regulator stability control potentiometer as described in the voltage regulator instruction manual. Test with no load applied and again with load applied.
5. Shut down generator set and open generator output circuit breaker. Remove the terminal box cover and check all wiring for loose connections.
6. Where wiring is found to be correct and in good condition, proceed to either step 7 or steps 8 and 9.
7. Connect meters as shown on Figure 8 and measure exciter field excitation as described in Section 8.
8. Shut down generator set and remove cover located on end of terminal box. Proceed to step 9.
9. Disconnect the voltage regulator by removing the connections to the regulator input power terminals. Tape lugged ends on wires to prevent ground or short during test. Remove F+ and F- exciter field lead wires from the F+ and F- terminals on the voltage regulators. Connect a common 12 volt storage battery onto exciter field leads F+ and F- keeping the polarity the same. Start up the generator set. While generator is operating at rated speed, read the voltage output on a voltmeter. Following this procedure, if the voltage is one-half or greater of rated output and does not fluctuate when there is no load on the generator, the problem is within the voltage regulator. Consult the voltage regulator instruction manual for further information.

SECTION 8
GENERATOR TESTS

MEASURING EXCITER FIELD EXCITATION

Exciter field excitation can be measured using a dc voltmeter and dc ammeter connected in the circuit between the voltage regulator dc output and exciter field as shown in Figure 8. The meters must be capable of measuring full load excitation. This will vary according to the size of the generator and can be determined from the test card attached to the generator or by contacting Kato Engineering/Reliance Electric, Mankato, Minnesota. Be sure to provide the generator serial number when requesting information.

Procedure

Observe the safety precautions in the Safety Summary at the front of this manual before operating, testing or making repairs to this equipment.

1. Connect dc voltmeter and dc ammeter as shown in Figure 8.
2. Start unit and run at rated speed.
3. Measure no-load excitation. The following abnormal conditions could occur.

   a. Generator Output Voltage Low, with Normal or Higher than Normal Excitation

   If this condition occurs, the problem is within the generator or exciter. Test the rotating rectifier diodes and winding resistance.

   b. Generator Voltage Low and Excitation Low

   If this condition occurs, the problem is within the voltage regulator or the wiring to the voltage regulator.

   c. No Generator Voltage and No Excitation

   If this condition occurs, flash exciter field to restore residual magnetism as described in the procedure given in Section 5 in this manual.
4. Measure excitation with full load applied. The following abnormal conditions could occur.

   a. Generator Voltage Low and Full-Load Excitation Normal or Higher Than Normal

   If this condition occurs, verify that speed is not low. Make certain load does not exceed rated full load current given on the generator nameplate.

   b. Generator Voltage Low and Full Load Excitation Low.

   If this condition occurs, problem is within the voltage regulator.

TESTING EXCITER ROTATING RECTIFIER DIODES

Observe the safety precautions in the Safety Summary at the front of this manual before operating, testing or making repairs to this equipment.

Stop generator set. Remove cover located on end of terminal box. Test as described in the procedure that follows using ohmmeter or three-volt test light.

NOTE: Where three-volt test light is used: bulb should light when connected in low resistance circuit and should not light when connected in high resistance circuit.

1. Unsolder wire connected to diode, then remove diode from heat sink (see Figure 3).
2. Measure resistance across diode. Reverse meter probes and again measure resistance.

   A good diode will have low resistance in the normal direction of current flow and high resistance to reverse current. High resistance both forward and reverse indicates diode has become open and should be replaced. Where light is used, failure of bulb to illuminate in both forward and reverse tests indicates an open diode.

   Very low resistance both forward and reverse indicates a shorted diode.

   Where light is used, diode is shorted when light illuminates during both forward and reverse polarity test.
3. Install diode. Torque 15 inch-pounds. Where original diode is replaced, make sure replacement diode is of the same rating and polarity.

4. Solder wire onto diode (see Figures 3 and 7).
5. Repeat steps 1 through 4 until each diode has been tested.

TESTING ZENER DIODE SURGE SUPPRESSOR

Observe the safety precautions in the Safety Summary at the front of this manual before operating, testing or making repairs to this equipment.

Stop generator set. Remove cover located on end of terminal box. Using an ohmmeter, measure zener diode forward polarity and reverse polarity resistance as described in the procedure that follows.

1. Unsolder wire that connects the zener diode located on the negative heat sink to the zener diode located on the positive heat sink. Then remove zener diode (see Figures 2 and 3).
2. Measure resistance across zener diode. Reverse meter probes; again measure resistance. Zener diode in good condition should have very high resistance, near infinity (∞) in one direction and resistance in the range of 1.25 to 3.0 megohms in the opposite direction.

   Very low resistance in both forward and reverse polarity indicates zener diode is short circuited and should be replaced while infinity resistance both forward and reverse indicates zener diode is open circuited and should be replaced.
3. Install zener diode. Torque 15 inch-pounds. Where original zener diode is replaced, make sure replacement zener diode is of the same rating and polarity (see Figures 3 and 7).
4. Test second zener diode as given in steps 1 through 3.
5. Carefully solder wire connecting zener diodes together (see Figures 3 and 7).

MEASURING WINDING RESISTANCE

Observe the safety precautions in the Safety Summary at the front of this manual before operating, testing or making repairs to this equipment.

Resistance test of winding may be made to determine whether winding has become open circuited. Resistance measured across a winding that has become open circuited will be very high (near infinity). In the case of shorted turns, resistance will generally be lower than normal. Where shorted turns are suspected, additional test using growler is recommended. Short to ground may be determined by testing winding insulation resistance using a hand cranked 500 VDC megger.

Resistance of winding will vary in proportion to the winding temperature. Where winding temperature is either higher or lower than 25°C (77°F), the formula that follows should be used to compute resistance.

$$\text{Resistance at } 25^\circ\text{ C} = \text{Measured Resistance} \times \frac{234.5 + 25}{234.5 + \text{Winding temp. in } ^\circ\text{C}}$$

A. Measuring Exciter Field Winding Resistance

Test as follows:

1. Stop generator set and remove cover located on end of terminal box.
2. Remove exciter field leads F+ and F- from the F+ and F- terminals on the voltage regulator.
3. Connect ohmmeter onto exciter field leads F+ and F- and measure exciter field winding resistance.
4. Where winding temperature is either high or lower than 25° C, compute resistance as given in the formula contained in preceding topic "Measuring Winding Resistance."
5. Before starting generator set be sure to connect field leads onto voltage regulator terminals F+ and F-. Maintain correct polarity (F+ to F+ and F- to F-).

B. Measuring Generator Field Winding Resistance

Test as follows:

1. Stop generator set and remove cover located on end of terminal box.
2. Remove generator field leads from the exciter rotating rectifier heat sink (+) and (-) terminals.
3. Connect test instrument such as Wheatstone bridge or Kelvin bridge onto generator field leads and measure generator field winding resistance.
4. Where winding temperature is either higher or lower than 25°, compute resistance as given in the formula contained preceding topic "Measuring Winding Resistance."
5. Before starting generator set, be sure to connect generator field leads onto the rotating rectifier heat sinks. Maintain correct polarity (positive to + and negative to -).

C. Measuring Exciter Armature Winding Resistance

This test requires removing the exciter armature lead wires from the exciter rotating rectifier diodes (refer to Figures 2 and 3).

Test as follows:

1. Stop generator set and remove cover located on end of terminal box.
2. Observe which of the exciter rotating rectifier diodes each of the three exciter armature leads connect to. Then unsolder any two of the three exciter armature lead wires.
3. Measure exciter armature phase-to-phase resistance using test instrument such as Kelvin bridge connected between exciter armature phase 1 lead wire and phase 2 lead wire. Repeat measuring from phase 1 to 3 and again phase 2 to 3.
4. Phase to phase resistances should be quite similiar. Where winding temperature was either higher or lower than 25° C, compute resistance as given in formula contained in preceding topic entitled "Measuring Winding Resistance."
5. Before starting generator set be sure to solder leads onto the exciter rotating rectifier diodes (refer to Figures 3 and 7).

D. Generator Stator Winding Resistance

The stator has twelve lead wires brought out from the coil groups permitting connection of the generator stator winding series wye, parallel wye, series delta, parallel delta, or single phase. It is recommended that when testing winding resistance the stator be connected three-phase series wye by connecting the stator leads as shown in Figure 6.

Test as follows:

1. Stop generator set and remove cover located on end of terminal box.
2. Disconnect the twelve generator stator leads numbered 1 through 12 from outgoing load lines, and the leads to voltage regulator, current transformers, and meters.
3. Connect stator leads in series wye configuration as shown in Figure 6 (a).
4. Measure resistance Phase 1 to 2 using a Kelvin bridge. Then measure Phase 1 to 3 and Phase 2 to 3. Phase to phase resistances should be quite similiar. Where winding temperature was either higher or lower than 25° C, compute resistance as given in formula contained in preceding topic entitled "Measuring Winding Resistance".
5. Connect generator wiring as shown on the wiring diagram provided with the generator set.

MEASURING WINDING INSULATION RESISTANCE

Observe the safety precautions in the Safety Summary at the front of this manual before operating, testing or making repairs to this equipment.

The insulation resistance will slowly decrease over the normal life of the generator. Test will indicate abnormal decrease in insulation resistance. Where insulation resistance test is to be made, use a 500 VDC hand cranked megger.

A. Measuring Generator Stator Winding Insulation Resistance

1. Stop generator set and remove cover located on end of terminal box.
2. Disconnect wiring from the twelve generator stator lead wires.
3. Connect stator leads in series wye configuration as shown on Figure 6 (a). Be sure to remove neutral lead from ground connection.
4. Connect megger ground lead to generator frame.
5. Connect megger lead onto phase 1 stator lead wire number 1. Make certain no connections other than the megger ground lead are touching the generator frame or other metal parts.
6. Test stator winding insulation resistance. Resistance should not be less than 1.48 megohm. If insulation resistance is lower than minimum value given above, determine cause of low insulation resistance. If due to wet windings, dry out the generator as described in Section 9 in this manual.

7. Before operating generator, connect wiring as shown on the wiring diagram supplied with the generator set. Install covers.

B. Measuring Generator Field Winding Insulation Resistance

Use 500 VDC hand cranked megger.

Test as follows:

1. Stop generator set and remove cover located on end of terminal box.
2. Disconnect the generator field leads from the (+) and (-) terminals located on the exciter rotating rectifier assembly heat sinks.
3. Connect megger ground lead onto either the generator shaft, fan, or drive hub.
4. Connect megger test lead onto either of the generator field lead wires. Make certain non-insulated lugs on field leads are not touching any generator parts.
5. Measure generator field winding insulation resistance. If the generator field winding insulation resistance is less than one megohm, determine cause of abnormally low insulation resistance. If due to wet windings, dry out generator as described in Section 9 in this manual.
6. Before operating the generator set, connect generator field leads onto exciter rotating rectifier heat sink (+) and (-) terminals (See Figure 3). Install covers.

C. Measuring Exciter Field Winding Insulation Resistance

Test using 500 VDC hand cranked megger as follows:

1. Stop generator set and remove cover located on end of terminal box.
2. Disconnect exciter field leads F+ and F- from the voltage regulator terminals F+ and F-.
3. Connect megger ground lead to the generator frame.
4. Connect megger test lead onto either exciter field lead F+ or exciter field lead F-. Make certain non-insulated ends on leads F- and F+ do not touch any metal parts.
5. Measure exciter field winding insulation resistance. If insulation resistance is less than one megohm, determine cause of abnormally low insulation resistance. If due to wet winding, dry out generator as described in Section 9 in this manual.
6. Before operating generator set, connect F+ lead wire onto voltage regulator terminal F+ and lead wire F-onto voltage regulator terminal F-. Install covers.

D. Measuring Exciter Armature Winding Insulation Resistance

Test using 500 VDC megger as follows:

1. Stop generator set and remove cover located on end of terminal box.
2. Using soldering gun, disconnect the three exciter armature lead wires from the exciter rotating rectifier assembly (see Figures 3 and 7).
3. Insulate non-insulated ends on two of the lead wires to prevent grounding during test.
4. Connect megger test lead onto the remaining exciter armature lead wire. Make certain non-insulated connection does not touch any metal part during test.
5. Connect megger ground lead onto either the generator shaft, fan, or drive hub.
6. Measure exciter armature winding insulation resistance. If insulation resistance is less than one megohm, determine cause of abnormally low insulation resistance.
7. Before operating generator set, solder exciter lead wires onto the exciter rotating rectifier assembly (see Figures 3 and 7).

SECTION 9
DRYING WINDINGS AND REMOVING AND INSTALLING PARTS

DRYING GENERATOR

An excessive accumulation of moisture on the generator windings can reduce the winding insulation resistance. The recommended stator winding insulation resistance test procedure and the minimum allowable insulation resistance is described in Section 8 in this manual.

Where moisture is present and test indicates insulation resistance does not exceed the minimum standard, thoroughly dry out the generator before operating the machine. The following are recommended drying methods.

A. Heat Enclosure

Remove the generator cover. Enclose the generator and insert heating units such as space heaters, lamps, or coils of steam pipe to raise the temperature. Leave a hole at the top of the enclosure to permit the escape of moisture. Temperature within the enclosure should not exceed 93 degrees C or 200 degrees F. The voltage regulator and any electronic components must be removed from the generator when using this method.

B. Forced Air

A portable forced air heater can be used to direct heat into the exciter end of the generator through openings in the endbell. Heat at point of entry should not exceed 93 degrees C or 200 degrees F.

C. Oven

Place the machine in a thermostat controlled oven and bake it at a temperature not to exceed 93 degrees C or 200 degrees F. The voltage regulator and any electronic component accessories must be removed from the generator when using this method.

REMOVING AND INSTALLING EXCITER ROTOR

The exciter rotor, Figure 2, consists of the exciter armature and the full-wave rotating rectifier assembly. The assembly mounts on an extension of the generator shaft that protrudes beyond the generator endbell. The exciter rotor assembly is held in place on the shaft by a rectangular key on the shaft and a bolt and washer on the end of the shaft. The inside surface on the exciter armature core is pushed against a raised shoulder on the generator shaft. The exciter has a small air gap with respect to that of the generator. For this reason the exciter rotor should be removed while transporting, assembling, or disassembling the generator and while coupling the generator to the prime mover.

A. Removing the Exciter Rotor

1. Remove cover located on end of generator terminal box.
2. Disconnect the generator field leads from the rotating rectifier (+) and (-) terminals.
3. Remove exciter retaining bolt from end of generator shaft.

NOTE: If exciter rotor cannot easily be removed by hand, a 1/4-20 bolt can be threaded into the tapped hole next to the exciter rotor. This action will push the exciter rotor off the shaft.

CAUTION

Do not pull on or strike the exciter armature windings.

4. Pull exciter rotor assembly off generator shaft. Pull rectangular key out of the keyway in shaft and keep it with the exciter rotor assembly.

B. Installing Exciter Rotor

1. Install rectangular key in keyway located in generator shaft.
2. Align keyway in the exciter armature core with the key and push exciter rotor onto shaft. DO NOT PUSH OR STRIKE WINDING OR RECTIFIER. MAKE SURE INSIDE EDGE ON ARMATURE CORE IS AGAINST RAISED SHOULDER ON SHAFT.
3. Install exciter retaining bolt on end of shaft. Torque 1/2 inch bolt to 60 foot-pounds.

4. Check exciter air gap. Air gap should not be less than that listed in Table 4. Check to make certain exciter armature core and the exciter field core are axially aligned.
5. Connect generator field leads onto rotating rectifier (+) and (-) terminals (refer to Figure 7).
6. Install cover on terminal box.

REMOVING AND INSTALLING TERMINAL BOX AND OUTBOARD ENDBELL

These parts must be removed to service or replace the bearing located at the exciter end of the generator.Be sure to follow the handling precautions described in Section 2 in this manual. Parts are shown on Figures 1 and 2.

A. Removing the Terminal Box and Outboard Endbell

1. Remove the side covers and the louvered end cover from the terminal box.
2. Disconnect incoming electrical cables and conduit. Disconnect stator leads.
3. Disconnect electrical wiring from voltage regulator and other controls mounted within the terminal box.
4. Remove the exciter rotor, comprised of the exciter armature and rotating rectifier assembly. Follow the steps given in procedure titled "Removing the Exciter Rotor."
5. Remove fiber wire retaining ring.
6. Remove parts that mount onto the back plate of the terminal box and the endbell.
7. Remove cover that surrounds the generator frame.
8. Place rotor support blocking in the generator air gap.
9. Remove bolts that mount the terminal box and the endbell onto the generator frame.
10. Remove terminal box.
11. On larger generators, attach hoist onto endbell. Take up slack but do not lift generator.
12. Pry endbell loose from pilot recess located in the frame endring.
13. Pull endbell straight back to position where bearing outer race is out of the bearing housing at the center of the endbell.
14. Remove endbell.
15. Some units may have circular fiber spacers located in the bearing housing section of the endbell. If this is the case, be sure to install spacers when reinstalling endbell.
16. Inspect and clean rust and dirt from the mounting face on endbell and the bearing housing. Remove any metal burrs.
17. Wipe a thin coat of grease in the bearing housing section of the endbell.

B. Installing Terminal Box and Outboard Endbell

During this procedure be sure to follow the handling precautions described in Section 2 in this manual. Refer to Figure 1 and the wiring diagram provided with the generator set.

1. Where generator was provided with circular spacers in the bearing housing section of the endbell, install the spacers.
2. Inspect to make certain bearing and mounting face on endbell is free of rust, dirt, and metal burrs.
3. Wipe thin coat of grease in bearing housing section in endbell.
4. Lift endbell into alignment with the bearing and carefully push bearing housing section on endbell over the outer race of the bearing.
5. Place endbell over end of shaft and turn endbell to position where lead wire hole in endbell aligns with lead wires. Pull stator leads through opening in the endbell. Make certain generator field leads are along wireway on shaft.
6. Push endbell bearing housing over the bearing outer race.
7. Mount terminal box and endbell onto the generator frame using hex head bolts and washers. Watch to make certain endbell fits evenly into pilot recess, and sequentially tighten bolts. Torque bolts according to recommended torque for SAE 5 cap screws given in Table 3.
8. Remove rotor support blocking from generator.
9. Install fiber wire retaining ring.
10. Install the exciter rotor as described in procedure titled "Installing Exciter Rotor."
11. Mount voltage regulator and controls.

12. Connect electrical wiring according to appropriate wiring diagram.
13. Before operating generator set, check to make certain unit is connected correctly and terminals are tight and insulated.
14. Remove tools and shop cloths.
15. Install covers and guards.

REMOVING AND INSTALLING DRIVE ENDBELL

The drive endbell encloses the driven end of the generator and also functions as the housing around the generator fan.This part must be removed to service or replace the bearing located at the driven end of the generator.

A. Removing Drive Endbell

1. On belt driven applications, remove drive belts and sheaves before removing endbell. Where generator is driven through flexible coupling, remove coupling and remove generator from the base before removing the drive endbell.
2. Loosen or remove cover that surrounds generator frame.
3. Place rotor support blocking in generator air gap.
4. Remove dripproof cover and screen from around endbell.
5. Remove bolts that mount the drive endbell onto the generator frame.
6. Pry endbell loose from pilot recess located in the frame endring.
7. Pull endbell straight back to position where bearing outer race is out of the bearing housing at the center of the endbell.
8. Remove endbell.
9. Remove air baffle located between the endbell and frame endring.
10. Some units may have circular fiber spacers located in the bearing housing section of the endbell. If this is the case, be sure to install spacers when reinstalling endbell.
11. Inspect and clean rust and dirt from the mounting face on endbell and the bearing housing. Remove any metal burrs.
12. Wipe a thin coat of grease in the bearing housing section of the endbell.

B. Installing Drive Endbell

During this procedure be sure to follow the handling precautions described in Section 2 in this manual. Refer to Figure 1 and the wiring diagram provided with the generator set.

1. Where generator was provided with circular spacers in the bearing housing section of the endbell, install the spacers.
2. Inspect to make certain bearing housing and mounting face on endbell is free of rust, dirt, and metal burrs.
3. Wipe thin coat of grease in bearing housing section in endbell.
4. Install air baffle.
5. Lift endbell into alignment with bearing and carefully push endbell over bearing.
6. Turn air baffle and endbell to position where bolt holes align with tapped holes in frame endring.
7. Sequentially tighten bolts that mount endbell onto the frame endring. Make certain endbell fits evenly into the pilot recess located in frame endring. Torque bolts. Refer to recommended torque for SAE 5 cap screws given in Table 3.
8. Remove support blocking from the generator air gap.
9. Remove tools and shop cloths.
10. Install generator covers.
11. Mount and align generator. Refer to procedures given in Section 3.

REMOVING AND INSTALLING BEARING

If the bearing(s) need to be removed for any reason, always install a new bearing. Remove and install bearing according to the general procedure that follows. Be sure to follow the handling precautions described in Section 2 in this manual.

1. Remove appropriate endbell.
   a. To replace drive bearing first remove drive endbell according to "Removing and Installing Drive Endbell" procedure.
   b. To replace outboard bearing, first remove exciter rotor, terminal box and endbell as described in "Removing and Installing Exciter Rotor" and "Removing and Installing Terminal Box and Outboard Endbell" procedures.
2. Remove bearing with suitable puller.
3. Apply a thin coat of clean lubricating oil or anti-seize lubricant to the pressure fit on the rotor shaft.
4. Heat the new bearing in an oven to a maximum temperature of 225°F.

CAUTION

Under no circumstances should pressure be applied to the outer race of the bearing, as permanent bearing damage could result.

CAUTION

Before installing bearing located at exciter end of generator, make sure generator field leads are in place in the wireway machined along generator shaft.

CAUTION

When handling heated bearing, wear protective clothing and gloves.

NOTE: **The bearing should slide on the shaft and be seated without excessive force. If the bearing binds on the shaft before being fully seated, a piece of tubing slightly larger than the shaft diameter can be placed over the shaft and the bearing can be slid in place by tapping lightly on end of tubing with a soft mallet. Care must be taken to ensure pressure is applied to the inner race only.**

5. Wearing protective gloves, start bearing evenly onto machined bearing journal section of the generator shaft.
6. Before bearing is allowed to cool, push bearing into place on shaft using a metal or fiber pipe with I.D. larger than the shaft. When properly installed, the bearing inner race will be against the step on the shaft.
7. Allow bearing to cool.
8. Install endbell. Refer to appropriate procedure.
   a. Where drive bearing was replaced follow "Installing Drive Endbell" procedure.
   b. Where outboard bearing was replaced follow "Installing Terminal Box and Outboard Endbell" procedure.
9. Where outboard bearing was replaced, install exciter rotor as given in the "Installing Exciter Rotor" procedure.
10. Remove rotor support blocking from generator air gap.
11. Where drive end bearing was replaced, mount, couple, and align generator as given in Section 3.
12. Remove tools and shop cloths.
13. Install covers.

REMOVING AND INSTALLING GENERATOR FAN

The fan consists of two half-sections bolted together. Access to the fan bolts is attained by removing the screen and dripproof shield that surrounds the drive endbell. In general, it will be necessary to remove the fan or loosen the fan bolts only when one of the following repair procedures is required:

1. Maintenance on fan blades or hub.
2. Removal of generator rotor through exciter end of generator.
3. Installation of original fan on a replacement rotor.

A. Removing Fan

NOTE: Do not remove fan or loosen fan blades unless it is absolutely necessary. Refer to preceding description.

1. Remove covers that surround generator frame and drive endbell.
2. Measure and record one or both of the following dimensions before loosening fan bolts.
   a. Measure from the fan blades to the air baffle.
   b. Measure from the fan hub to the drive bearing.

NOTE: When installing fan, position the fan on the shaft according to distance measured during step 2.

3. Place support blocking in generator air gap, remove coupling and remove drive endbell as given in "Removing and Installing Drive Endbell" instructions.
4. Loosen fan bolts and remove fan.

B. Installing Fan

1. Position fan on generator shaft at distance measured during step 2 of preceding "Removing Fan" instructions.
2. Torque fan bolts according to recommended torque fan SAE 5 cap screws.

REMOVING AND INSTALLING GENERATOR ROTOR

Rotor removal requires removal of the following parts:

1. Exciter rotor
2. Outboard endbell and terminal box
3. Drive endbell
4. Drive coupling or on belted generator sets the drive sheaves and belts

NOTE: On flexible coupled generator sets, unless there is sufficient space for removing the rotor through the outboard end of the generator, it will be necessary to remove the generator from the base.

Where rotor will be removed from drive end, the generator fan should be left in place on the rotor. Rotor removal through the outboard or exciter end requires the fan to be removed from the shaft before attempting to slide the rotor out of the stator.

A. Removing Rotor

Determine direction rotor will be removed from stator. Refer to preceding note and items 1 through 4.

1. Remove required parts according to the appropriate instructions given in preceding parts of Section 9.
2. Where rotor will be removed from drive end of generator, obtain a burr free metal pipe that is as long as the generator stator and has an I.D. slightly larger than the shaft. Slide the pipe over the portion of the generator shaft that mounts the exciter rotor.
3. Where rotor will be removed from exciter end of generator, obtain a burr free metal pipe that is as long as the generator stator and has an I.D. slightly larger than the shaft. Slide the pipe over the driven end of the generator shaft.

4. Follow either step a or b.
   a. Install portable jack under the pipe and another under the shaft at the opposite end.
   b. Wrap cable around the pipe and attach to an overhead hoist. Wrap a cable about the generator shaft at the opposite end of generator and attach cable to another hoist.

CAUTION

While removing and installing rotor, visually check to make certain that windings do not strike or rub against parts in the generator.

5. Carefully lift both ends of generator rotor to position where air gap exists around entire O.D. of rotor core
   structure.
6. Move rotor out of stator by moving the jacks or hoists. Visually check to make certain that air gap is maintained and windings do not strike or rub against other parts of the generator.
7. Place rotor on support blocks.

B. Installing Rotor

1. Lift rotor into alignment with the stator.
2. Install pipe through stator and onto end of rotor shaft. See steps 2 and 3 of preceding "Removing Rotor" instructions.
3. Attach cables and hoists or use jacks as described in step 4 of "Removing Rotor" procedure.
4. Carefully move rotor into stator watching to make sure air gap is maintained and windings do not strike or rub on generator parts.
5. Install rotor support blocks in air gap.
6. Lower rotor onto rotor support blocking. Then remove cables and hoists or jacks.
7. If fan was removed, install fan.
8. Install drive endbell as described in "Installing Drive Endbell" procedure.
9. Install outboard endbell and terminal box as described in "Installing Terminal Box and Outboard Endbell"procedure.
10. Measure to make certain fan is correct distance from air baffle. Refer to "Installing Fan" procedure. Torque fan bolts in accordance with recommended torque for SAE 5 cap screws given in Table 3.
11. Install exciter rotor as given in the "Installing Exciter Rotor" procedure.
12. Remove support blocking from generator air gap.
13. Turn generator rotor slowly by hand. Visually check to make certain rotating parts do not rub on stationary parts.
14. Mount, couple and align generator. Refer to procedures given in Section 3.
15. Remove tools and shop cloths.
16. Connect electrical wiring.
17. Install covers.

SECTION 10
FIGURES AND TABLES

GENERAL

The drawings, electrical schematics, and tables contained in this section are included to aid in the installation and maintenance of this equipment. The overall electrical connection diagram supplied with the generator set should be followed when connecting the stator lead wires, voltage regulator, and any other operating controls provided with this unit.

Table 1
Generator Voltage - Standard Kamag Generators

Connection (See Note)	Voltage Range (By Adjustment of voltage control rheostat)	
	50 Hertz	60 Hertz
3 Phase series wye (Phase-to-Phase)	340 to 400	408 to 490
3 Phase parallel wye (Phase-to-Phase)	170 to 200	204 to 245
3 Phase series delta (Phase-to-Phase)	196 to 230	236 to 283
Single Phase 3 wire (Line-to-Line)	196-230	236 to 283

NOTE: Phase-to-neutral voltage for 3-phase wye connections are 58% of line-to-line voltages listed. Line-to-neutral voltage for 3 wire single phase is one-half the line-to-line voltage listed.

Table 2
Minimum Air Gap for Kato Brushless Exciter

Exciter Rotor (Armature) Diameter (in inches)	Minimum Air Gap (in inches)
5 3/4	0.014
9 7/8	0.014
12/ 1/2	0.018
16 1/4	0.035

Table 3
Recommended Torque SAE 5 Steel and SAE 8 Steel Cap Screws

Shank Diameter (in inches)	Recommended Torque (in foot pounds) A.S.T.M. A449 S.A.E. 5 Steel	S.A.E. 8 Steel
1/4	9	13
5/16	18	28
3/8	31	46
7/16	50	75
1/2	75	115
9/16	110	165
5/8	150	225
3/4	250	370
7/8	378	591
1	583	893
1 1/8	782	1410
1 1/4	1097	1964
1 3/8	1461	2633
1 1/2	1748	3150

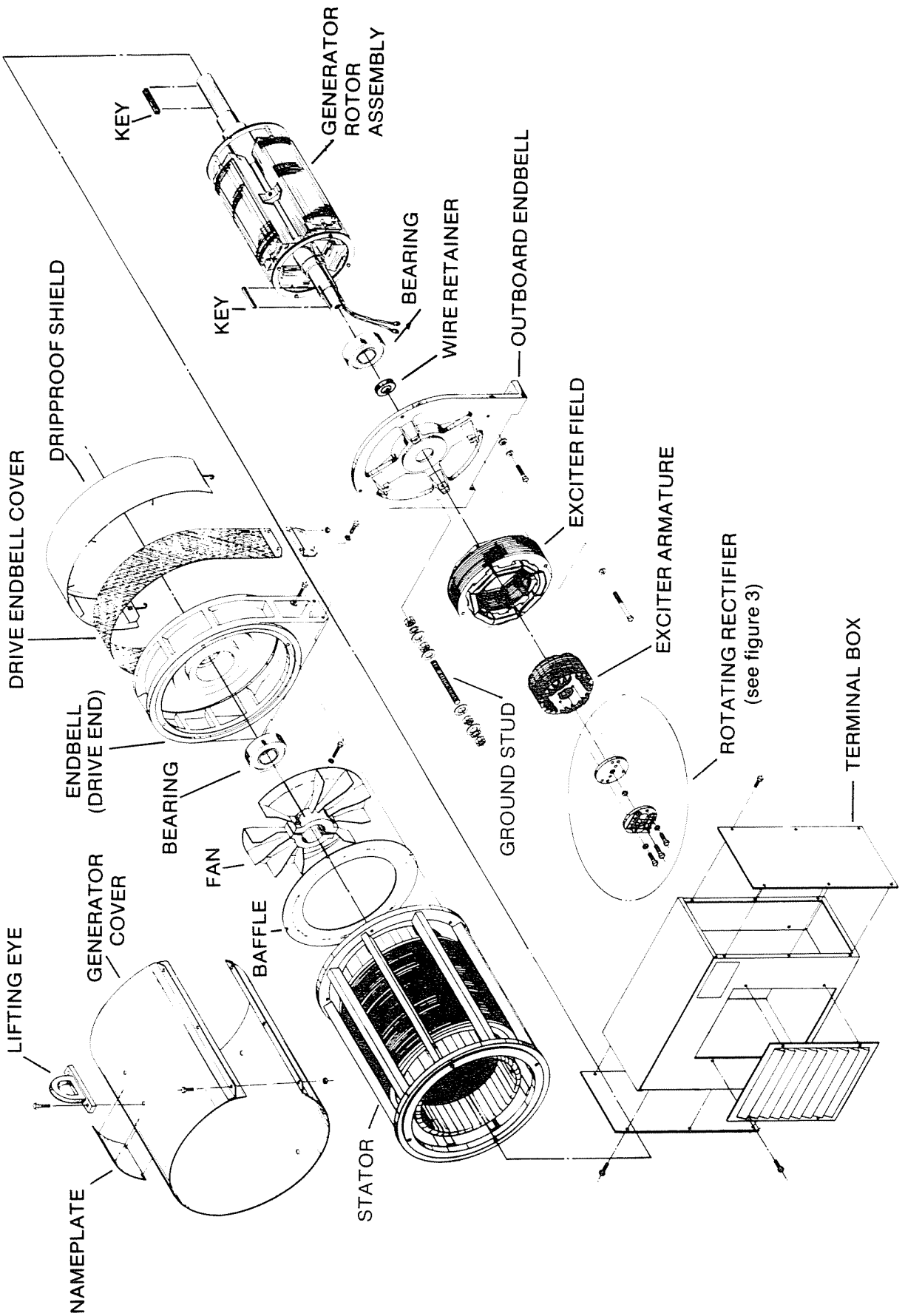

Figure 1 Two Bearing Kamag Generator with Outboard Exciter

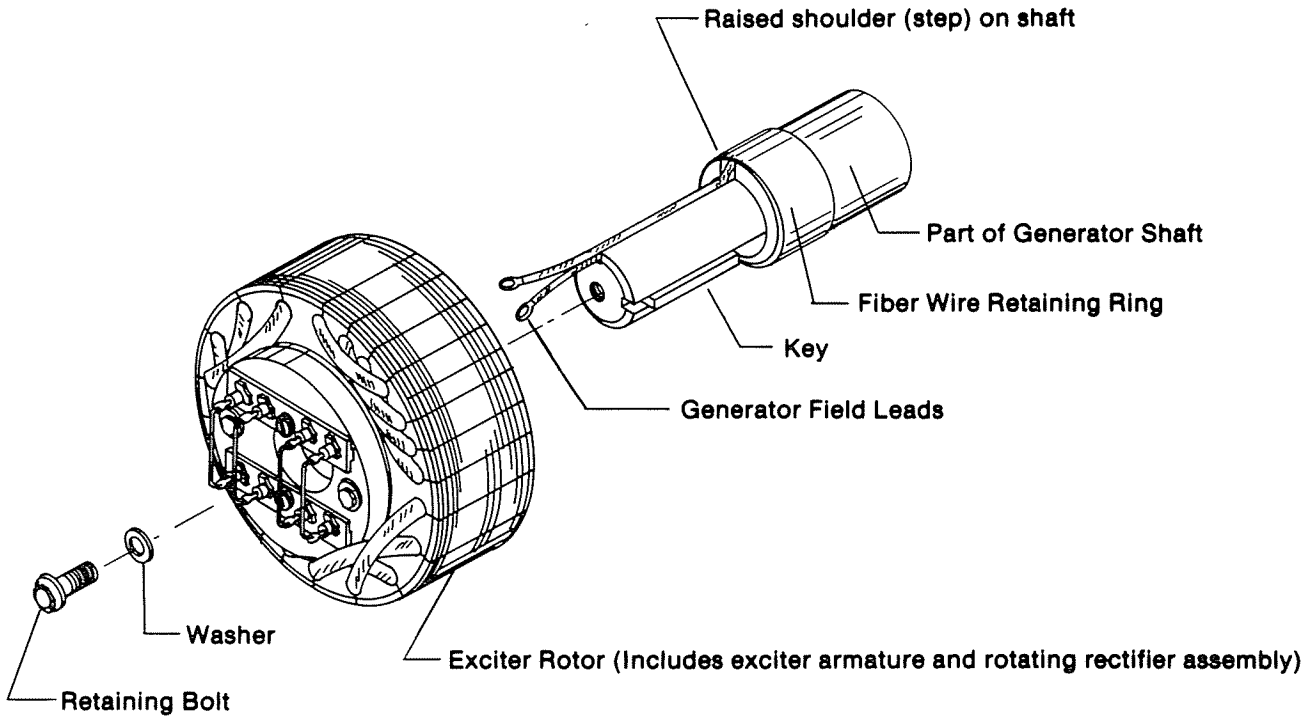

Figure 2 Exciter Rotor Installation

NOTE: **Exciter and Generator Field Interwiring is shown on Figure 7.**

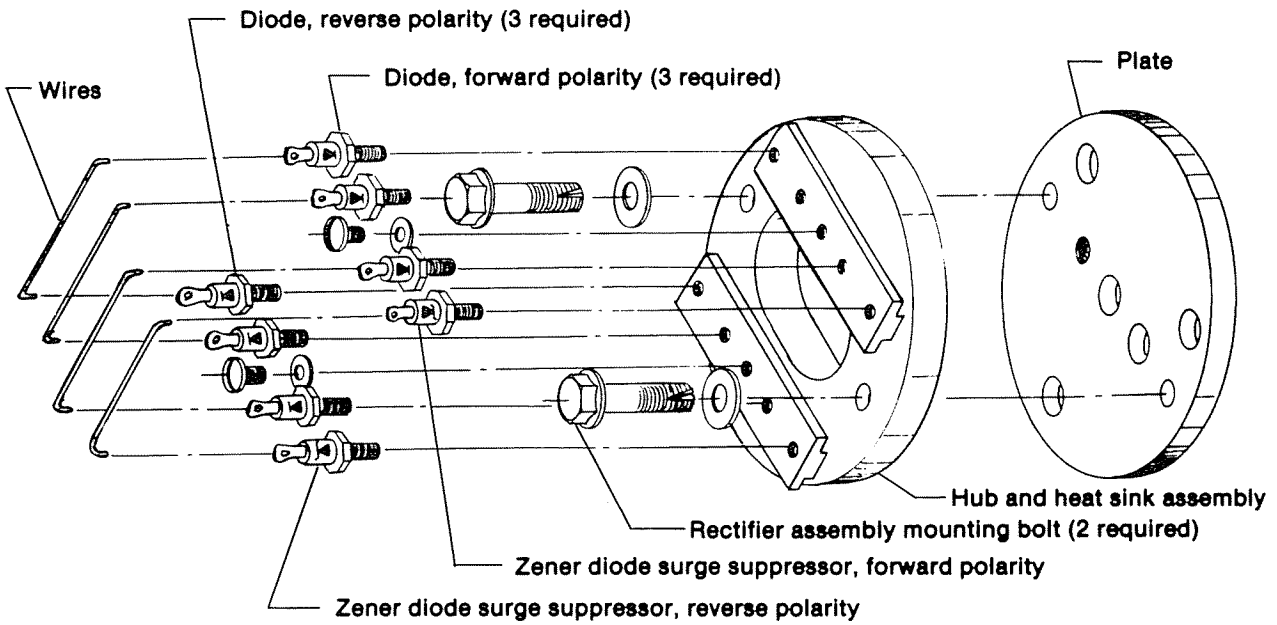

Figure 3 Rotating Rectifier

NOTE: Shaft offset should not exceed .002 inch.

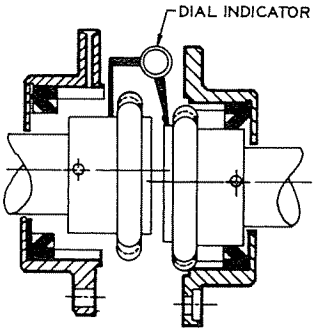

a. Testing shaft offset (parallel) alignment using dial indicator on coupling hub O.D.

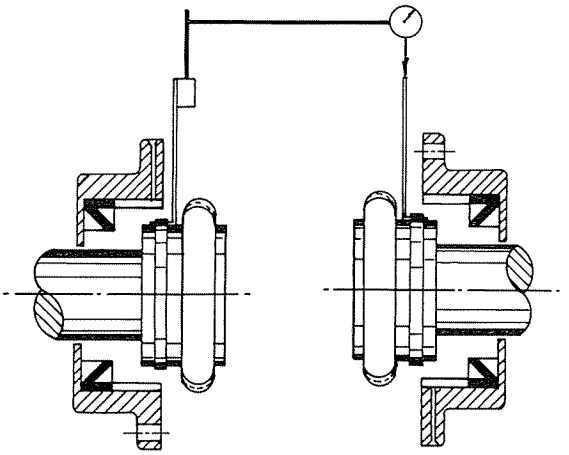

b. Testing shaft offset (parallel) alignment using brackets and dial indicator.

Figure 4 Testing Shaft Offset (Parallel) Alignment of Flexible-Coupled Generator

NOTE: T.I.R. should not exceed .001 inch multiplied by r, where r equals distance in inches from shaft center to dial indicator finger

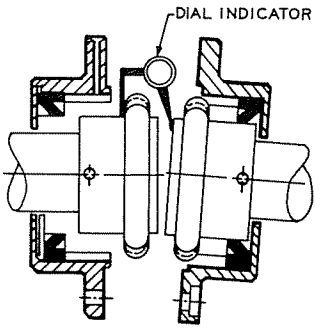

a. Testing angular alignment using dial indicator against coupling face.

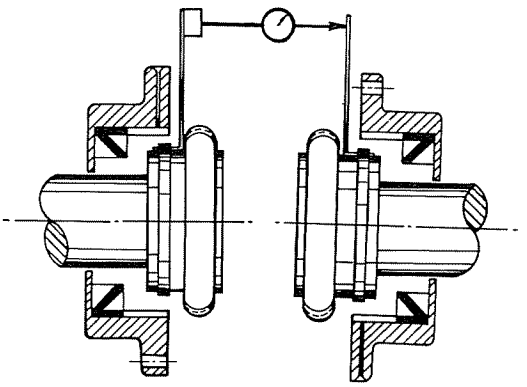

b. Testing angular alignment using brackets and dial indicator.

Figure 5 Testing Angular Alignment of Flexible-Coupled Generator

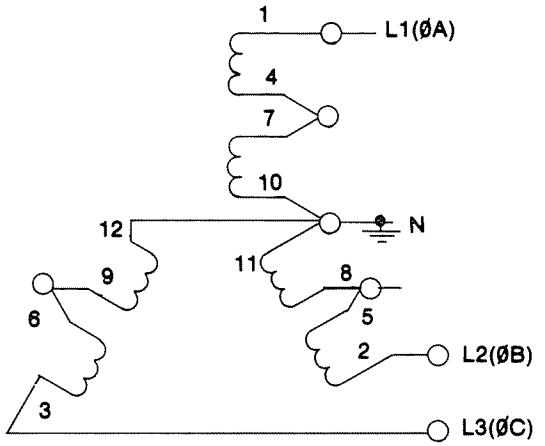

a. 3-Phase series wye

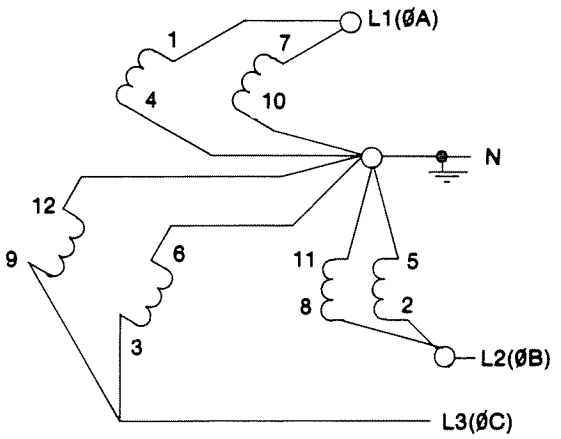

b. 3-Phase parallel wye

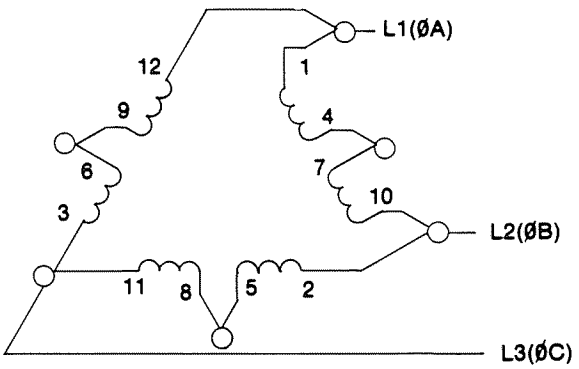

c. 3-Phase series delta

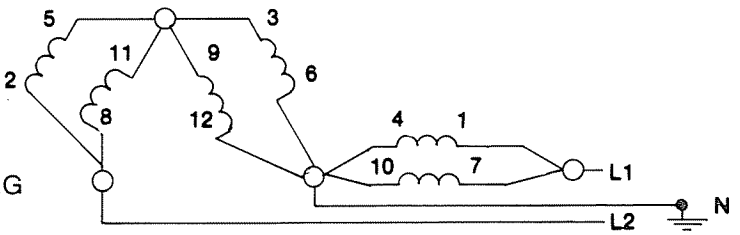

d. Single-phase, 3 wire

NOTE: Voltage Range for standard KAMAG generators listed in Table 1 in this manual.

Figure 6 Twelve Wire Generator Stator Lead Wire Connection Diagram

CAUTION

This drawing does not show interconnection for voltage regulator and other controls that could be provided with the generator set. Be sure to follow the wiring diagram provided with the generator set when making electrical connections.

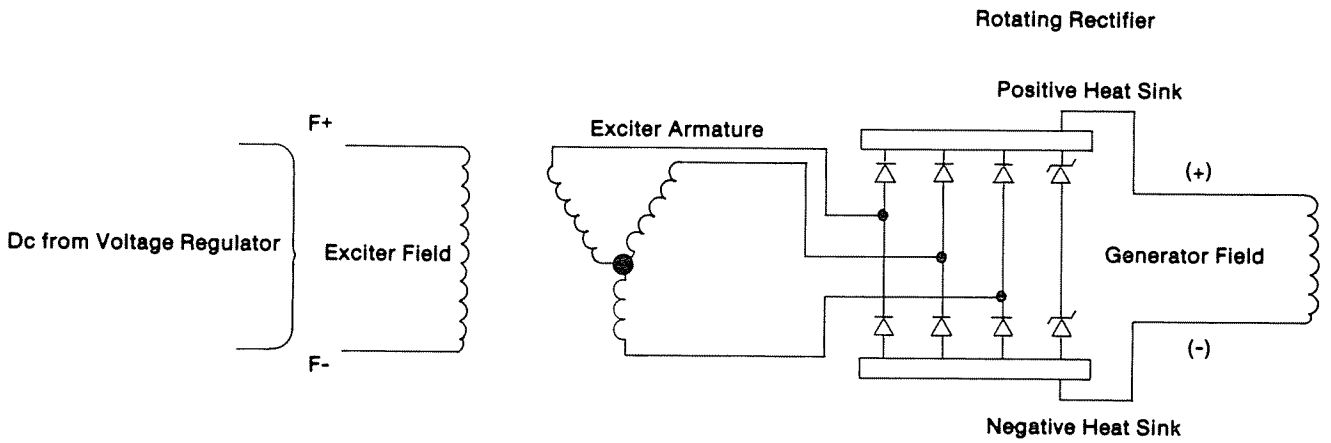

Figure 7 Exciter and Generator Field Interconnection

NOTE: Three forward polarity diodes and one forward polarity zener diode surge suppressor mounted on positive heat sink.
Three reverse polarity diodes and one reverse polarity zener diode surge suppressor mounted on negative heat sink.

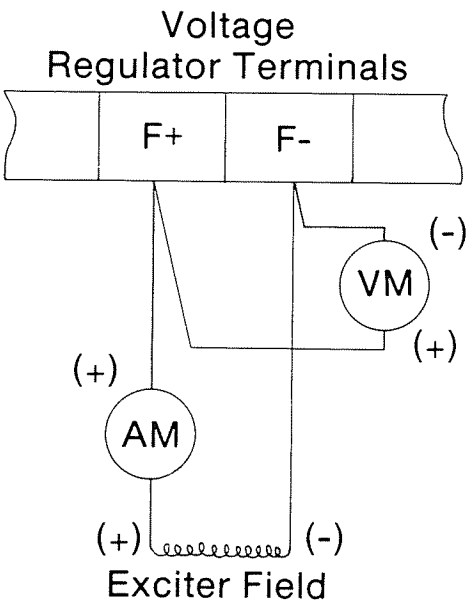

NOTE: Use dc voltmeter and dc ammeter with scale equal to or more than the one-minute field forcing capacity given in the voltage regulator instruction manual.

Figure 8 Field Excitation Measurement Meter Connection Diagram

WARRANTY

Kato Engineering warrants that its products will perform as specified in bonafide quotations or Kato publications, providing such products are properly installed, properly cared for, and properly operated under normal environmental conditions.

Standard products manufactured by Kato Engineering are warranted to be free from defects in workmanship and material for a period of one year in operation or 18 months from date of shipment, and any products which are defective in workmanship or material will be repaired or replaced at the option of Kato Engineering. Final determination as to whether a product is actually defective rests with Kato Engineering. The obligation of Kato Engineering hereunder shall be limited solely to repair and replacement at its factory, of products that fall within the foregoing limitations and shall be conditioned upon receipt by Kato Engineering of written notice within the warranty period of any alleged defects or deficiency. No products shall be returned to Kato Engineering without its prior consent. In no case will Kato Engineering accept shipping charges incurred either through return of defective items to its factory or return of repaired or replacement items to the user. Kato Engineering cannot assume responsibility or accept invoices for unauthorized repairs to its components even though defective. In the case of components, parts or units purchased by Kato Engineering the obligation of Kato Engineering shall not exceed the settlement that it is able to obtain from the supplier thereof.

The life of the products of Kato Engineering depends to a large extent upon the type of usage. Kato Engineering makes no warranty as to period of service nor as to fitness of its products for specific applications by the buyer. In no event will Kato Engineering be liable for consequential or incidental damages or any expense incurred by the Buyer due to use or sale of products sold by Kato Engineering.

The foregoing warranty is exclusive and in lieu of all other warranties expressed or implied, including but not limited to any warranty of merchantability or of fitness for a particular purpose.

This Warranty does not apply to experimental or developmental products.

P.O. Box 47 / Mankato, Minnesota 56001 / (507)625-4011 TLX: 29-0786 / 1-83

KATO ENGINEERING
RELIANCE ELECTRIC

P.O. Box 47 / Mankato, Minnesota 56001 / (507) 625-4011 TLX: 29-0786 / **PN: 350-04002-00**

KATO ENGINEERING
RELIANCE ELECTRIC

KATOLIGHT CORPORATION

MAGNAMAX GENERATOR

INSTALLATION OPERATION, AND MAINTENANCE MANUAL

TABLE OF CONTENTS

TABLE OF CONTENTS *2*

SAFETY *6*

GENERAL INFORMATION *7*

MECHANICAL DESIGN **7**

General 7

Conduit Box 7

MagnaMAX Unirotor™ Construction 7

Adapters and Drive Discs 7

ELECTRICAL DESIGN **8**

Temperature Rise 8

Standby Generator Ratings 8

Premium Insulation System 8

Power Factor 8

MagnaMAX Voltage Regulator 8

HOW TO READ A MODEL NUMBER **9**

INSTALLATION *10*

RECEIVING YOUR MAGNAMAX GENERATOR **10**

UNPACKING AND HANDLING **10**

STORAGE **10**

PREPARATION FOR USE **10**

GENERATOR MOUNTING - SINGLE BEARING **10**

GENERATOR MOUNTING-TWO BEARING **11**

BELT DRIVE **11**

ENVIRONMENTAL CONCERNS **11**

ELECTRICAL CONNECTIONS *12*

GENERATOR LEAD CONNECTIONS **12**

12 LEAD HIGH WYE CONNECTION **13**

12 LEAD LOW WYE CONNECTION **13**

12 LEAD HIGH DELTA CONNECTION **14**

12 LEAD LOW DELTA CONNECTION **14**

10 LEAD HIGH WYE CONNECTION **15**

10 LEAD LOW WYE CONNECTION **15**

6 LEAD WYE CONNECTION **16**

6 LEAD DELTA CONNECTION **16**

3 LEAD DELTA CONNECTION **17**

4 LEAD WYE CONNECTION **17**

DOUBLE DELTA -- SINGLE PHASE CONNECTION **18**
LOW ZIG ZAG -- SINGLE PHASE CONNECTION **18**
HIGH ZIG ZAG -- SINGLE PHASE CONNECTION **18**
PARALLELING OPERATIONS ***19***
PRIME MOVER **19**
VOLTAGE REGULATOR **19**
SWITCHGEAR **19**
PARALLELING BASICS **19**
REACTIVE LOAD CONTROL **20**
PARALLELING CIRCUITRY **20**
THYRISTOR OR SCR LOADING ***21***
OPERATION ***21***
PRE-START INSPECTION **21**
STARTING-UP THE GENERATOR **22**
FIELD FLASHING **22**
VOLTAGE ADJUSTMENTS **22**
OTHER ADJUSTMENTS **23**
MAINTENANCE ***23***
GENERAL INFORMATION **23**
AIR INTAKE AND EXHAUST **23**
ELECTRICAL CONNECTIONS, WINDINGS **24**
LUBRICATION **24**
DRYING ELECTRICAL INSULATION **26**
Space Heaters 26
Oven 26
Forced Air 26
"Short Circuit" Method 26
CLEANING METHODS **27**
Solvents 27
Cloth and Compressed Air 27
Brushing and Vacuum Cleaning 27
Shell Blasting 27
Steam Cleaning 27
DISASSEMBLY ***28***
REMOVAL FROM PRIME MOVER **28**
CONDUIT BOX REMOVAL **29**
EXCITER STATOR (FIELD) REMOVAL **30**
EXCITER ARMATURE (ROTOR) REMOVAL **30**

PMG STATOR REMOVAL **31**
MAIN ROTOR REMOVAL **33**
FRONT END BRACKET REMOVAL **35**
EXCITER INSPECTION ***35***
EXCITER STATOR **35**
EXCITER (ROTOR) ARMATURE **36**
PMG INSPECTION ***37***
PMG STATOR **37**
PMG ROTOR **37**
MAIN ROTOR INSPECTION ***37***
BEARING **37**
FAN **38**
MAIN ROTOR CORE AND WINDINGS **40**
DRIVE DISCS (SINGLE BEARING GENERATORS ONLY) **40**
FRONT (EXCITER) END BRACKET INSPECTION ***40***
DRIVE END BRACKET OR SAE ADAPTER INSPECTION ***41***
MAIN STATOR INSPECTION ***42***
FRONT END BRACKET INSTALLATION ***42***
MAIN ROTOR INSTALLATION ***42***
PMG INSTALLATION ***45***
EXCITER INSTALLATION ***46***
CONDUIT BOX INSTALLATION ***47***
ASSEMBLY TO PRIME MOVER ***48***
TROUBLESHOOTING ***50***
INTRODUCTION **50**
SYMPTOM: **51**
NO VOLTAGE OR RESIDUAL VOLTAGE 51
LOW VOLTAGE - 52
NO LOAD 52
LOW VOLTAGE WHEN LOAD IS APPLIED 53
HIGH VOLTAGE 53
VOLTAGE IS FLUCTUATING 54
OPERATES SATISFACTORILY WHEN COLD, BUT SHUTS DOWN WHEN WARM 54
BUILDS VOLTAGE FROM STARTUP,THEN GOES TO LOW (RESIDUAL) VOLTAGE 54
EQUIPMENT RUNS NORMALLY ON UTILITY POWER, BUT WILL NOT RUN ON GENERATOR SET 54
GENERATOR TESTING ***55***
VISUAL INSPECTION **55**

CONSTANT EXCITATION (12V BATTERY) TEST **55**
MEASURING VOLTAGES **56**
TYPICAL VOLTAGE MEASUREMENTS **57**
Generator Output Voltage 57
Regulator Output (Exciter Stator Input) 57
Regulator Sensing 57
Regulator Input Volts (PMG Output Volts) 57
CURRENT (AMP) MEASUREMENTS **57**
MEASURING RESISTANCE **58**
Main Stator 58
Exciter Rotor 58
TESTING DIODES (RECTIFIERS) **58**
INSULATION RESISTANCE - MAIN STATOR **59**
GENERATOR TESTING **59**
INSULATION RESISTANCE - MAIN ROTOR **59**
INSULATION RESISTANCE - EXCITER STATOR **60**
INSULATION RESISTANCE - EXCITER ROTOR **60**
MAIN ROTOR FIELD AC IMPEDANCE TEST **60**
MAGNAMAX EXPLODED VIEW **61**
STANDARD TOOLS ***64***
SPECIAL TOOLS **65**
MISCELLANEOUS **66**
PREPARATION FOR SHIPMENT OR EXTENDED STORAGE ***66***
SHIPPING INSTRUCTIONS **66**
STORAGE INSTRUCTIONS **66**
TABLE 12-1: MAGNA MAX - FASTENER AND TORQUE SPECIFICATIONS ***68***
TABLE 12-2: CAPSCREW TORQUE VALUES ***69***
TABLE 12-3:EXCITATION DATA -60 HZ - 1800 RPM ***70***
TABLE 12-3:EXCITATION DATA -50 HZ - 1500 RPM ***71***
TABLE 12-5: RESISTANCE VALUES - MAIN WINDINGS ***72***
TABLE 12-6: RESISTANCE VALUES - EXCITER WINDINGS ***73***

SAFETY

PLEASE REMEMBER SAFETY FIRST. If you are not sure of the instructions or procedures, seek qualified help before continuing.

This service manual emphasizes the safety precautions necessary during the installation, operation, and maintenance of your generator.

Each section has caution and warning messages. These messages are for your safety and the safety of the equipment involved. If any of the cautions or warnings is not readily understood, seek clarification from qualified personnel before proceeding.

Before any service work is done, disconnect all power sources and, where appropriate, lock out all controls, to prevent an unexpected start-up of the generator set. Proper grounding in compliance with local and national electrical codes must be provided. These safety precautions are necessary to prevent potential serious personal injury, or even death.

The hazards associated with lifting or moving the generator are pointed out in the installation and service sections; incorrect lifting or moving can result in personal injury or property damage.

Whenever the generator is running, always assume and proceed as if voltage is present. Residual voltage is present at the generator leads and at the regulator panel connections, even with the regulator fuse removed. Caution must be observed, or serious personal injury or death can result.

Whenever solvents, cleaners, or flammable liquids are present, adequate ventilation must be available to avoid fire, explosion, and health hazards. Always avoid breathing vapors and use suitable personal protective equipment to prevent personal injuries. (Such as eyes, face, and hand protection.)

This manual is not intended to be a substitute for properly trained personnel. Only qualified trained people should attempt repairs. The cautions and warnings point out known conditions that are potentially dangerous. Each installation will create its own set of circumstances. No manual can cover every possible situation.

When in doubt, ask. Don’t be embarrassed to ask, “dumb questions”. Remember that dumb questions are much easier to handle than dumb mistakes.

GENERAL INFORMATION

MECHANICAL DESIGN

General

All single and two bearing units are manufactured with cast iron end brackets and adapters, and fabricated steel frames. Flexible drive discs and SAE adapters are machined to SAE standards. Pre-lubricated, regreasable, shielded ball bearings are used on MagnaMAX generators. Standard units are fully guarded. Drip proof shields are available as an option.

Conduit Box

The large end mounted conduit box is constructed of formed sheet steel that will allow the addition of top mounted control packages. Refer to Katolight for top mounted controls of more than 240 lbs. There is ample room inside the conduit box for a circuit breaker (through 800A Frame) and other options. The conduit box cover properly directs outside ventilating air through the generator.

MagnaMAX Unirotor™ Construction

An aluminum die cast rotor core affords high mechanical integrity and low vibration at operating speeds. Amortisseur winding and coil supports are die cast as an integral part of the rotor. Laminations are 4-pole, one piece laminations which are shrunk fit and keyed to the shaft. No dovetails, cross bolts or other pole to shaft connecting devices are used. The cast unidirectional aluminum alloy ventilation fan provides even air distribution to maximize cooling and generator efficiency.

Adapters and Drive Discs

All single bearing units are available with several adapters and drive disc arrangements. These can be shipped to order or can be changed in the field with standard shop tools. When changing flexible drive discs, spacers are used between the discs and the cast iron hub to maintain SAE standard dimensions.

ELECTRICAL DESIGN

All standard products have 2/3 pitch main windings to eliminate the third harmonic. This serves to lower operating temperatures, give lower harmonic content and better waveform, and extend the overall life of the generator.

Temperature Rise

All ratings and frame sizes are based on NEMA and CSA Class F and Class H temperature rises on both the rotor and stator windings. Ratings for British, German, French, IEC and all popular marine agencies are available.

Standby Generator Ratings

Synchronous generators used on emergency backup power can have temperature rises up to 25°C above those for continuous operation. (NEMA MG1 -22.40 and MG 1-22.84).

Premium Insulation System

All MagnaMAX generators are built with Class H or better insulation materials. All standard generators are suitable for continuous duty at Class F temperature rise and will give equivalent or better winding life expectancy to generators supplied with Class A or B insulation systems operated within their temperature limits. The varnishes and epoxies used are synthetic, non-hygroscopic. Multiple dip and bake cycles of the main winding, plus a final coat of epoxy, make the standard winding moisture and fungus resistant. The MagnaMAX rotor is wet wound with thermo-setting epoxy applied between each layer, plus a final coating of epoxy for moisture and abrasion resistance.

MagnaMAX generators can be ordered with an epoxy vacuum pressure impregnated insulation system as an option. (MagnaMAX generators with form wound coils include VPI as standard.)

Power Factor

All standard generators are designed for operation at rated kVA at 0.8 lagging power factor but can be operated at rated kVA over the 0.8 to 1 .0 power factor range.

MagnaMAX Voltage Regulator

The standard voltage regulator is a fully encapsulated, static types with a solid state build up circuit. Standard features include 3-phase RMS sensing, paralleling, adjustable under frequency protection, and over excitation protection. The regulator meets EMI suppression to Mil Std-461B, part 9. An optional feature is adjustable armature current limiting. See the regulator manual for more information.

HOW TO READ A MODEL NUMBER

It is extremely important to properly identify the machine when requesting parts or service. Always have the generator model number and serial number when requesting information from the factory. We cannot help you without this information.

An Example For MagnaMAX Generators ***431RSL 2000 AA - 000***

Character	Category	Description
1st three characters	Frame Number	
4th character	Winding type	R—Random Wound F—Form Wound
5th character	Bearing arrangement	S—1 Bearing D—2 Bearings
6th character	Voltage range	L—Up to 480 volts M—1000-6600 volts S—600 volts
7th Character	Product style	4-Magna
8th Character	Type	
9th & 10th Character	Wk2 Code	
11th Character	Modification	A-Z assigned sequentially
12th Character	Mounting Arrangement	A-Y see chart figurer 2-1
13th, 14th & 15th characters	Modification numbers	For internal use only

Arrangement	Adapter SAE Size	Drive Disc SAE Size
A	3	11-1/2
B	2	11-1/2
C	4	8
D	3	10
E	1	11-1/2
F	1	14
G	4	7-1/2
H	1	Delco
J	1/2	14
K	2	10
L	1/2	Delco
M	0	14
N	2	Small Delco
0	None	None
P	0	18
S	0	Delco
U	00	18
V	4	6-1/2
W	00	21
Y	4	10

Figure 2-1

INSTALLATION

RECEIVING YOUR MAGNAMAX GENERATOR

Upon receipt of the generator, it is recommended that it be carefully examined for possible damage incurred in shipment. The generator was given to the Freight Company in good condition, and they are responsible for the product from our dock to yours. Any damage should be noted on the freight bill before accepting the shipment. Claims for damages must be promptly filed with the Freight Company.

UNPACKING AND HANDLING

Read all instruction cards carefully. When lifting, attach an overhead crane to the lifting lugs on the generator frame. Apply lifting forces in a vertical direction.

WARNING
THE LIFTING LUGS ON THE GENERATOR ARE DESIGNED TO SUPPORT THE GENERATOR ONLY. DO NOT LIFT COMPLETE GENERATOR SET BY MEANS OF LIFTING DEVICES ON THE GENERATOR. PERSONAL INJURY OR QUIPMENT DAMAGE MAY OCCUR.

STORAGE

In the event that the generator is not to be installed on the prime mover immediately, it is recommended that it be stored in a clean, dry area that is not subject to rapid changes in temperature and humidity. See "STORAGE INSTRUCTIONS" for more information.

PREPARATION FOR USE

Although the generator is carefully inspected and tested in operation before it leaves the factory, it is recommended the unit be thoroughly inspected. The insulation on the wire should be inspected and all bolts should be checked for tightness.

Remove all shipping tapes, bags, blocks, and skids, which are used to prevent vibration and rotor movement during shipment. Dry, low-pressure compressed air of approximately 30 PSI (206 KPA) can be used to blow out the interior of the generator. In the case of two bearing machines, it is possible to turn the rotor by hand to make sure that it rotates smoothly without binding.

If the machine has been in storage for a year or longer it is recommended that it be lubricated according to the lubrication instructions and chart supplied in the maintenance section.
If the machine has been exposed to damp, humid conditions the insulation resistance should be checked. Refer to the instructions supplied in this manual.

GENERATOR MOUNTING - SINGLE BEARING

Single bearing generators are provided with an SAE flywheel adapter and flexible drive discs. Very close tolerances are maintained in the manufacture of the generator so that the alignment procedure is extremely simple. A coupling hub of nodular iron is shrunk on the shaft and special steel drive

discs are bolted to the hub. Holes are provided in the periphery of the coupling disc, which correspond to tapped holes in the flywheel. The outside diameter of the discs fits in a rabbet in the flywheel so that concentricity is assured in all cases.

WARNING
DO NOT APPLY ANY FORCE TO THE GENERATOR FAN FOR LIFITNG OR FOR ROTATING THE GENERATOR ROTOR. DISREGARDING THESE INSTRUCTIONS MAY CAUSE PERSONAL INJURY OR EQUIPMENT DAMAGE

CAUTION: GRADE 8 CAPSCREWS OR GRADE 8 PLACE-BOLTS AND HARDENED WASHERS ARE REC-OMMENDED TO MOUNT THE DRIVE DISCS TO THE FLYWHEEL.DO NOT USE HELICAL OR OTHER LOCKING DEVICES UNLESS APPROVED.

The SAE adapter and the flywheel housing are designed to match each other with no further alignment necessary. Shims may be necessary under the feet of the generator to insure a solid mounting. See THE SERVICE SECTION for more information.

GENERATOR MOUNTING-TWO BEARING

Two bearing generators are provided with a shaft extension and key way. For direct-coupled sets the assembler furnishes a flexible coupling which is installed between the driver and the generator shaft.

IMPORTANT: Aligning the two machines as accurately as possible will reduce vibration, increase-bearing life, and insures minimum coupling wear. It may be necessary to shim the generator feet for proper support and alignment. Consult the coupling manufacturer's instructions for alignment specifications and procedures.

BELT DRIVE

Please refer to Katolight for applications involving belt driven installations.

ENVIRONMENTAL CONCERNS

Dirt, moisture, heat, and vibration are enemies of electrical equipment. The ambient temperature should not exceed the value shown on the generator nameplate. Generators for outdoor application should be protected from the elements by housings with proper openings for ventilation. This protection should be designed to prevent the direct contact of wind driven rain, snow, or dust with the generator. In moist or humid areas, such as the Tropics and marine serv-ice, additional protection is recommended. Although the standard windings are humidity and moisture resistant, special insulation and accessories such as space heaters can increase generator life. In extremely dirty and dusty environments a means of providing filtered cooling air to the generator is recommended. Please refer to Katolight for filter kits that are available.

ELECTRICAL CONNECTIONS

The generator conduit box construction allows conduit to enter the top, bottom, or either side of the box. A hole-saw or any suitable tool can be used to provide for the conduit entrance. Protect the interior of the generator from shavings when drilling or sawing. An approved connector must be used in conjunction with the conduit.

To minimize the transmission of vibration, it is essential that flexible conduit be used for all electrical cable entrance to the generator.

Refer to the connection diagram supplied with the generator and / or the proper diagrams shown in this section. Install all intercomponent and external wiring in accordance with the regulations of the national and local electrical codes. Clean all contact surfaces to assure good electrical bonding with the generator lugs or bus bars. Use heavy-duty terminal lugs or good quality clamps for making all connections. Insulate all connections in accordance with national and local regulations.

Be sure the generator frame is grounded to all the other components of the system with a ground wire in accordance with national and local regulations.

GENERATOR LEAD CONNECTIONS

The electrical connections in the conduit box should be made in accordance with the appropriate “connection diagram.” Use the diagram appropriate for the number of leads and voltage range required. Refer to the drawings supplied with the generator and to drawings in this section.

The final voltage setting is established within the selected range by an adjustment of the voltage regulator.

CAUTION: SOME GENERATORS HAVE MULTIPLE, IDENTICALLY MARKED, CABLES FOR EACH LEAD. CONNECT ALL IDENTICALLY MARKED CABLES TOGETHER WHEN MAKING CONNECTIONS.

12 LEAD HIGH WYE CONNECTION

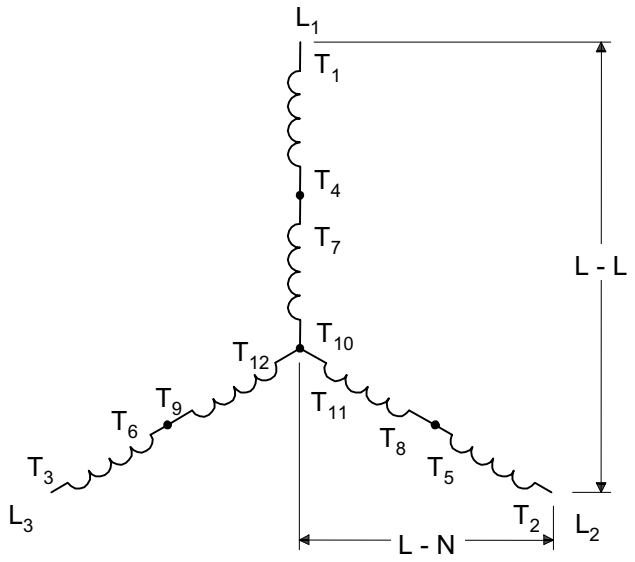

VOLTAGE		
	L-L	L-N
60 HZ	480 460 440 416 380	277 266 254 240 219
50 HZ	416 400 380	240 231 219

12 LEAD LOW WYE CONNECTION

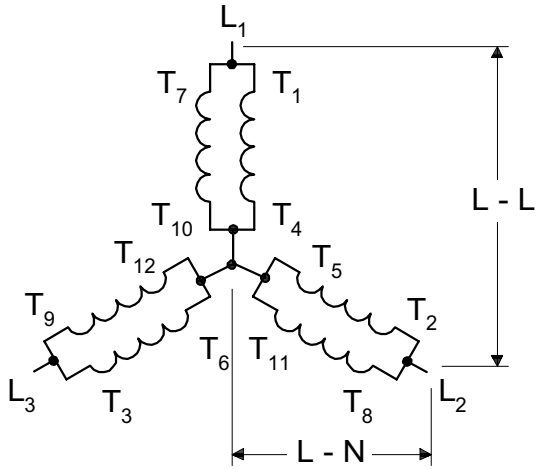

VOLTAGE		
	L-L	L-N
60 HZ	240 230 220 208 190	139 133 127 120 110
50 HZ	208 200 190	120 115 110

12 LEAD HIGH DELTA CONNECTION

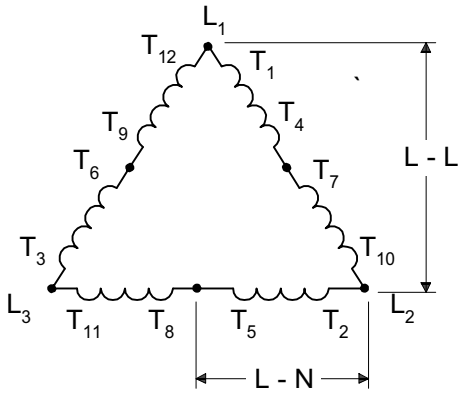

VOLTAGE		
	L-L	L-N
60 HZ	240 277	120 139
50 HZ	200 220 240	100 110 220

12 LEAD LOW DELTA CONNECTION

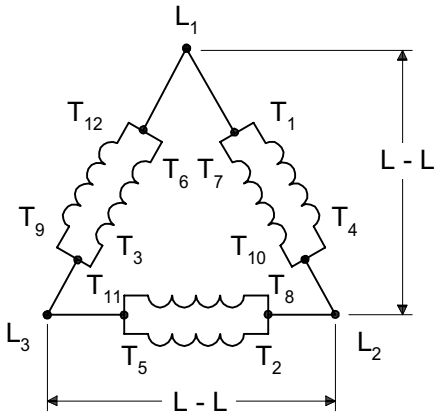

VOLTAGE		
	L-L	L-N
60 HZ	120 139	NA
50 HZ	100 120	NA

10 LEAD HIGH WYE CONNECTION

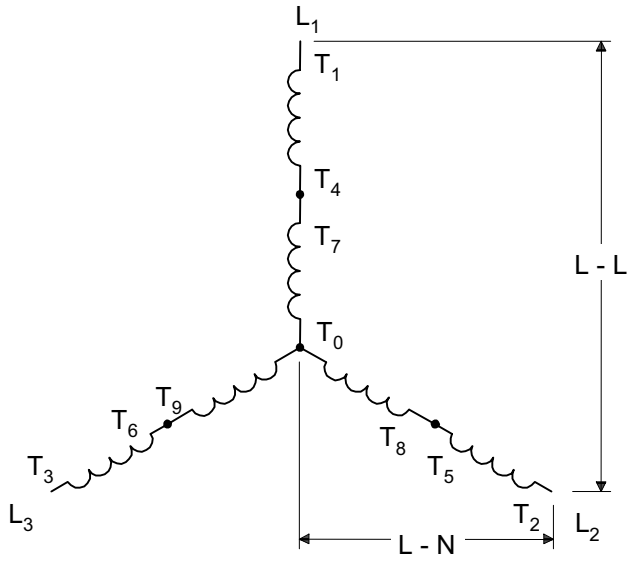

VOLTAGE		
	L-L	L-N
60 HZ	480 460 440 416 380	277 266 254 240 219
50 HZ	416 400 380	240 231 219

10 LEAD LOW WYE CONNECTION

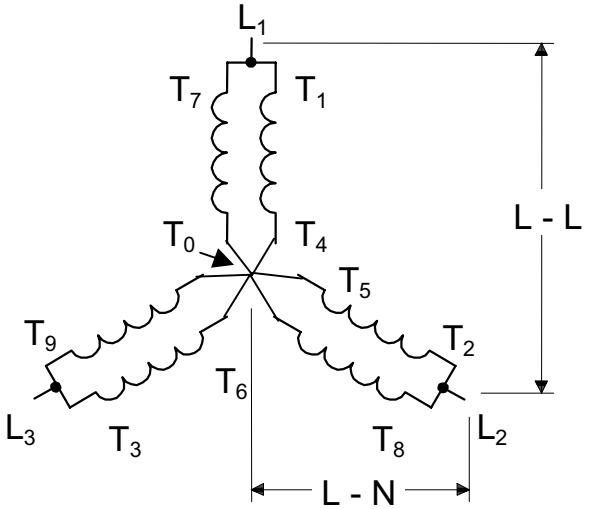

VOLTAGE		
	L-L	L-N
60 HZ	240 230 220 208 190	139 133 127 120 110
50 HZ	208 200 190	120 115 110

6 LEAD WYE CONNECTION

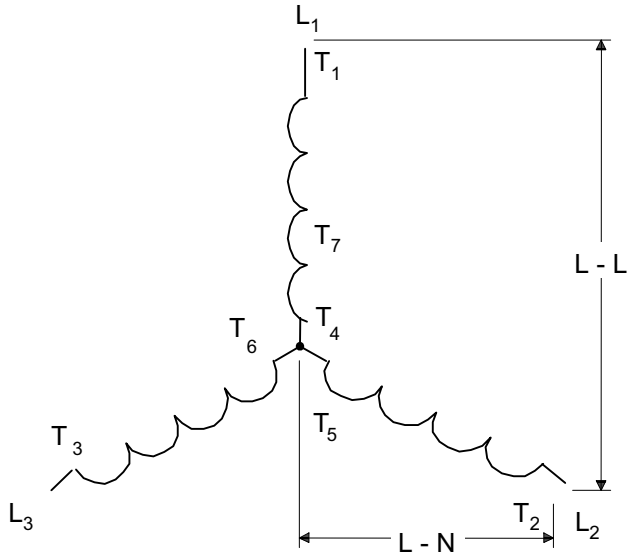

VOLTAGE		
	L-L	L-N
60 HZ	13800 6600 4160 3300 240 230 220 203 190	7967 3811 2400 1905 139 1363 127 120 110
50 HZ	11000 6600 3300 208 200 190	6351 3811 1905 120 115 110

6 LEAD DELTA CONNECTION

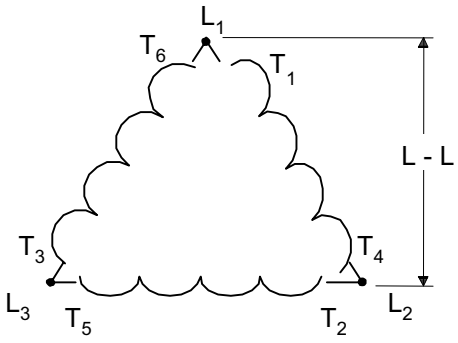

VOLTAGE		
	L-L	L-N
60 HZ	7967 2400	NA
50 HZ	6351 1905	NA

3 LEAD DELTA CONNECTION

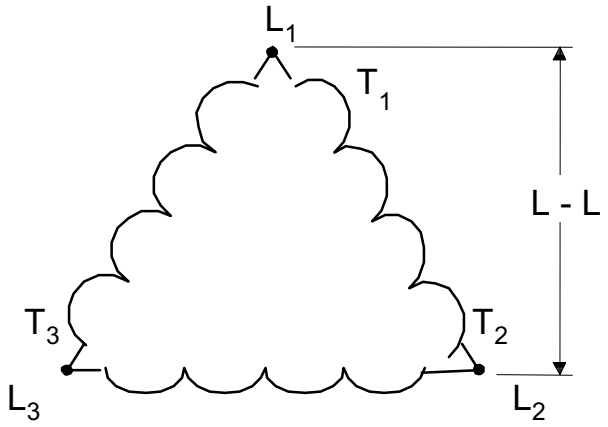

VOLTAGE		
	L-L	L-N
60 HZ	7967 2402	NA NA
50 HZ	6351 1905	NA NA

4 LEAD WYE CONNECTION

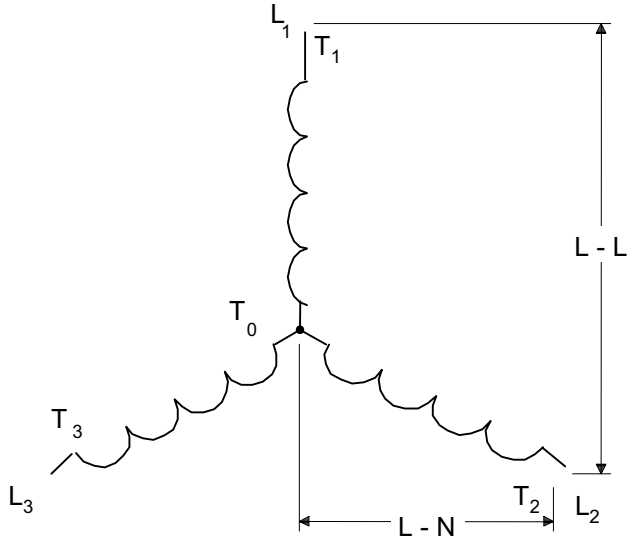

VOLTAGE		
	L-L	L-N
60 HZ	13800 6600 4160 3300 2400 600 480 380	7967 3811 2400 1905 1386 346 277 219
50 HZ	11000 6600 3300 416 400 380	6351 3811 1905 240 231 219

DOUBLE DELTA -- SINGLE PHASE CONNECTION

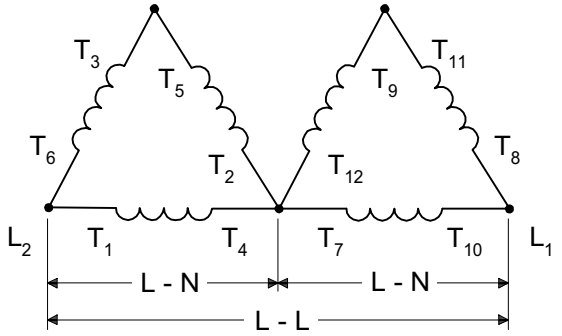

VOLTAGE		
	L - L	L - N
60 HZ	240 220 200	120 110 100
50 HZ	220 200	110 100

LOW ZIG ZAG -- SINGLE PHASE CONNECTION

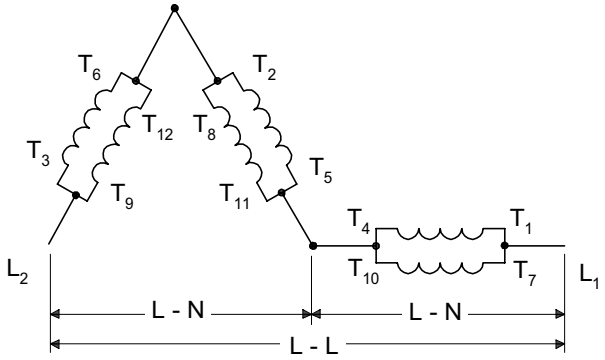

VOLTAGE		
	L - L	L - N
60 HZ	240 220 200	120 110 100
50 HZ	220 200	110 100

HIGH ZIG ZAG -- SINGLE PHASE CONNECTION

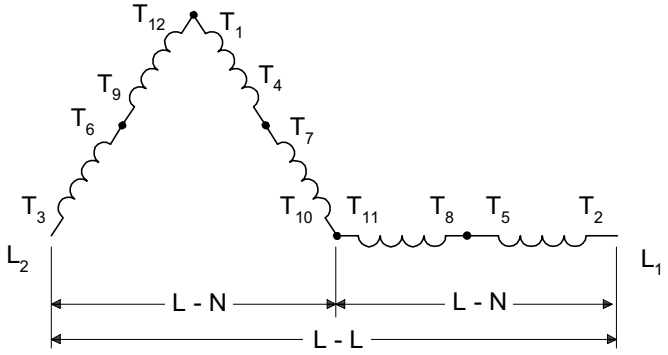

VOLTAGE		
HZ	L - L	L - N
60	480 440	240 220
50	440 400	220 200

PARALLELING OPERATIONS

MagnaMAX generators come standard with amortisseur windings die cast as an integral part of the rotor. This exclusive, Unirotor™, construction makes all MagnaMAX generators suitable for paralleling operations when the proper control equipment is added. Paralleling with other generator sets and / or with the utility power grid offers a number of advantages. Multiple unit installations increase power capacity; they can be added or removed from the line depending on the load requirements; they can be better maintained and repaired (since single source breakdown would mean total loss of power), and they often provide more reliable, efficient, and economical operation.

Successful parallel operation means that the generators deliver power to the external system without delivering power to each other, or accepting power from the load bus or power grid. Additional equipment is necessary to insure safe and successful operation.

PRIME MOVER

The prime mover provides the speed and torque which will be necessary to keep the machines in synchronized operation. A governor controls the prime mover's speed. The governor will directly control the watt or kW output and frequency of the unit. The governor must have special paralleling provisions to permit parallel operation with the other machines.

VOLTAGE REGULATOR

The voltage regulator controls the generator output voltage and the reactive power supplied by the generator. When two or more ac generators operate in parallel, the voltage regulator must have paralleling provisions (either internally or external to the regulator) to control the reactive or VAR load while it is in parallel operation. A separate paralleling current transformer is required to sense the reactive current and signal the voltage regulator. This additional paralleling circuitry is absolutely necessary to control the reactive current flowing between the generator sets.

SWITCHGEAR

There are additional relays and breaker controls that are necessary to insure safe, trouble free operation of paralleled units. Reverse power relays monitor the direction of power flow to insure that the generator is delivering power, not accepting it. These power relays control breakers, which are a means of connecting and disconnecting the generator from the load. The total system can include over-voltage, over-current protection, under frequency protection, power factor correction provision and a variety of associated control equipment from manual switchgear to microprocessors. The amount of control gear and level of sophistication will be determined by the needs and requirements of the particular application.

PARALLELING BASICS

The following points are basic criteria which must be met before two units can be paralleled. **THIS IS NOT MEANT TO BE SPECIFIC INSTRUCTIONS FOR PARALLELING OPERATION.**

1. Additional paralleling circuitry
   - A. Voltage regulator-paralleling provisions
   - B. Paralleling current transformer(s)
   - C. Paralleling provisions on governor controls
   - D. Switchgear

2. The voltage and frequency must be the same for all sets with voltages in phase.

3. The voltage regulation characteristics of the individual generators should be similar.

4. The generators must have the same phase rotation.

5.The driving engines should have the same speed regulation characteristics and the governors should be adjusted to give the same speed regulation.

Before operating generator sets in parallel, each set should be checked by starting, operating, and adjusting the sets as individual units before attempting paralleling.

REACTIVE LOAD CONTROL

When two identical generators are operating together in parallel and an unbalance occurs in field excitation, circulating currents begin to flow between the generators. This current will appear as a lagging power factor or inductive load to the highly excited generator, and as a leading power factor or capacitive load to the generator with the lower field current. This is known as the reactive circulating current and there are two methods of controlling it in parallel operation:

1. Reactive droop compensation. (Formerly known as parallel droop compensation.) The bus voltage droops, or decreases, as the reactive lagging power factor load is increased.

2. Reactive differential compensation. (Formerly known as cross current compensation.) The reactive differential compensation circuit allows parallel generators to share reactive loads with no decrease or droop in generator voltage.

The circuit must meet the following criteria:

A. All paralleling current transformers for all the generators being paralleled must be included in the secondary interconnection loop.

B. When different size generators are paralleled all paralleling current transformers must have the same proportional ratios that give approximately the same secondary current.

C. Voltage regulator paralleling circuitry must be the same.

D. Current transformer secondary and the generator lines must be isolated electrically.

E. It is also desirable to have an auxiliary contact on the main generator breaker to short the parallel CT secondary when that breaker is open (not connected to the load bus).

Because of the above criteria, reactive differential compensation cannot be used when paralleling with the utility power grid. There is no limit, however, in the number of generators that can be included in this type of circuit.

PARALLELING CIRCUITRY

Because of the number of variables involved in paralleling generator sets, every installation will have its own circuitry and methods or procedure of bringing paralleled units on line. There are numerous ways of connecting paralleled units and an almost unlimited variety of applications and associated equipment.

When parallel operation is desired, it is important that the control manufacturer, the generator manufacturer, and the systems engineer work together to insure the proper selection of all components. Please refer to Katolight for application assistance.

THYRISTOR OR SCR LOADING

Solid state electronic control devices which utilize thyristors or SCR firing circuits (such as variable frequency induction motor controls, precision motor speed controls, no-break powered battery chargers, etc.) can introduce high frequency harmonics which adversely affect or destroy the normal waveform of the generator. This creates additional heat in the generator stator and rotor, and can cause overheating. These devices can and do present problems to non-utility power generating equipment or any limited power bus system. The problems that can occur are not limited to the generator itself, but can effect the solid state control device, the equipment it controls, other associated loads, monitoring devices or a number of combinations over the entire system.

MagnaMAX generators can supply power to thyristor or SCR loads when properly applied. The standard voltage regulator is PMG powered and senses 3 phase RMS voltages for maximum stability against severely distorted waveforms. SCR type applications such as cranes, shovels, etc., require special consideration of the generator insulation system due to greater dielectric stress and severe environmental conditions. It is important that the control manufacturer, the generator manufacturer, and the systems engineer work together to insure the proper selection of all components. Please refer to Katolight for application assistance.

OPERATION

PRE-START INSPECTION

Before operating the generator for the first time, the following checks are recommended.

1. A visual inspection should be made to check for any loose parts, connections, or foreign materials

2. Check for clearance in the generator and exciter air gap. Be sure the generator set turns over freely. Bar the generator over by hand at least 2 revolutions to be sure there is no interference.

WARNING
DO NOT APPLY ANY FORCE TO THE GENERATOR FAN FOR LIFITNG OR FOR ROTATING THE GENERATOR ROTOR. DISREGARDING THESE INSTRUCTIONS MAY CAUSE PERSONAL INJURY OR EQUIPMENT DAMAGE

3. Check all wiring against the proper connection diagrams and make sure all connections are properly insulated. Support and tie leads to keep them from being damaged by rotating parts or by chafing on sharp corners.

4. Be sure the equipment is properly grounded.

5. Inspect for any remaining packing materials and remove any loose debris, building materials, rags, etc. that could be drawn into the generator.

6. Check fasteners for tightness.

7. Check to be sure no tools or other hardware have been left inside or near the machine.

8. Install and check to be sure all covers and guards are in place and secure.

WARNING
RESIDUAL VOLTAGE IS PRESENT AT THE GENERATOR LEADS AND AT THE REULATOR PANEL CONNECTIONS EVEN WITH THE REGULATOR FUSE REMOVED. CAUTION MUST BE OBSERVED OR SERIOUS PERSONAL INJURY OR DEATH CAN RESULT.

STARTING-UP THE GENERATOR

The following procedure should be followed for starting-up the generator for the first time:

1.The generator output must be disconnected from the load. Be certain that the main circuit breaker is open.

2.Disable the voltage regulator by removing the fuse.

WARNING
DO NOT OVERSPEED THE GENERATOR. EXCESSIVE CENTRIFUGAL FORCES COULD DAMAGE THE ROTATING FIELDS. BE PREPARED FOR AN EMERGENCY SHUTDOWN.

3.Follow the manufacturer's instructions and start the prime mover. Check the speed and adjust to the RPM shown on the generator nameplate.

4. Replace the regulator fuse and adjust the voltage to the required. Check all line to line and line to neutral voltages to be sure they are correct and balanced. If the voltages are not correct shut down immediately and recheck all connections.

5. Close the main circuit breaker and apply the load.

6. Monitor the generator output current to verify it is at or below nameplate amps.

7. Adjust engine speed at full load to 1800 rpm for 60 hertz, 1500 rpm for 50 hertz. (Refer to prime mover/governor instruction manuals.)

8. Before stopping the engine, remove the load by tripping the main circuit breaker.

FIELD FLASHING

The standard MagnaMAX generator is supplied with a PMG (permanent magnet generator). **It will never require field flashing.** In rare cases where a special generator may be furnished without a PMG, refer to the factory for more detailed information. Include the complete generator model and serial number.

VOLTAGE ADJUSTMENTS

The voltage regulator controls the generator output voltage. There is a cover to access the control panel on the side of the generator conduit box

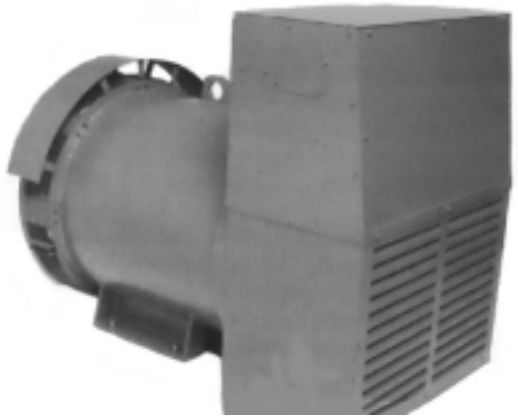

Figure 4-1

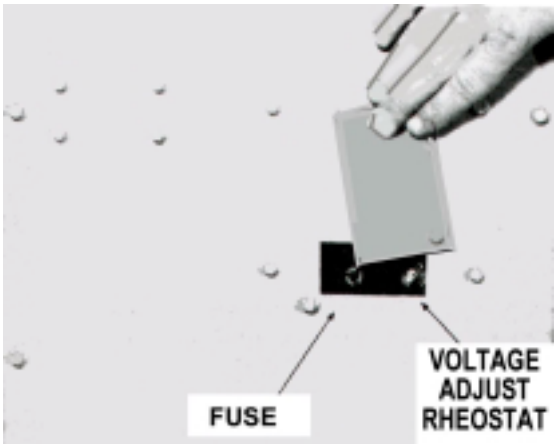

Figure 4-2 Regulator Access

Refer to the regulator manual for detailed information. In cases where special or remote mounted regulators are used, refer to instructions supplied by the generator set assembler and to the voltage regulator manual.

OTHER ADJUSTMENTS

Depending upon application, adjustments to other protective and control gear may be required. Refer to instructions provided by the by the supplier of the generator set.

The standard MagnaMAX voltage regulator also has many protective and control circuits. It is imperative that the set up instructions for any regulator supplied be followed.

MAINTENANCE

GENERAL INFORMATION

Dirt, heat, moisture, and vibration are common enemies of a generator. Keeping the generator clean and dry, maintaining proper alignment of the generator and its prime mover, and preventing overloads will result in efficient operation and long life.

Generators that are outdoors should be protected from the elements by suitable houses or enclosures.

Dirt and dust will conduct electricity between points of different electrical potential. Moisture will aggravate the problem further. Insulation system failure can result if corrective action is not taken. Measuring insulation resistance can test the condition of the insulation system.
(See Generator Testing.).

Insulation resistance should be checked when putting the generator into service after it has been in storage and anytime contamination by moisture and dirt is suspected. Normally, moisture buildup is not a problem while the generator is running, since heat produced internally will tend to keep it dry but can collect in the generator when it is shut down. The problem will be worse in humid environments or in areas where extreme temperature changes cause condensation (dew) to form inside the generator. Space heaters, air filters, and premium insulation systems, such as our VPI process, should be considered in difficult environments.

Accumulations of dust and dirt not only contribute to insulation breakdown, but they can also increase temperature by restricting the dissipation of heat. Materials such as talc, lint, rock dust, or cement dust may obstruct the ventilation.

The most harmful types of foreign materials include carbon black, metallic dust and similar substances that not only impede ventilation, but also form a conductive film over the insulation, increasing the possibility of insulation failure.

Machines operating in dirty places should be disassembled and cleaned periodically.

AIR INTAKE AND EXHAUST

Check the area around the air intake and exhaust openings to be sure they are unobstructed.



.

Figure 5-1

ELECTRICAL CONNECTIONS, WINDINGS

Inspect for loose or contaminated connections Check wires for cracked or frayed insulation. Tighten connections and replace defective or oil soaked insulation.

If inspection shows that varnish coatings on the windings have deteriorated, they should be coated with insulating varnish. Please refer to Katolight for insulation system requirements.

LUBRICATION

All generators are lubricated before leaving the factory and are ready for operation. As a general rule, bearings should be re-lubricated annually or at the indicated intervals in table 5-3, whichever occur first.

Unusually severe operating conditions, such as high ambient or dusty environments, require more frequent lubrication (every six months or one half the table intervals, whichever occurs first).

Use Chevron SRI or equivalent anti-friction type high quality, grease with a lubrication temperature' range of -22° to +350° F (-30° to +175° C)

To add or renew grease, proceed as follows:

1. Stop unit.

2. Wipe the grease plugs and surrounding parts to insure they are clean.

3. Remove both the fill and drain plugs.
See figure 5-2

4. Insert 1/8" N.P.T. grease fitting in fill pipe.

5. Free the drain holes of any hard grease, using a piece of wire it necessary.

6. Using a low-pressure grease gun, add grease according to the amounts in table 5-3.

7. Start unit with drain plug removed - fill pipe may be open or closed. Allow unit to run 15 minutes to allow excess grease to drain.

8. Stop unit, wipe off any drained grease, and replace filler and drain plugs.

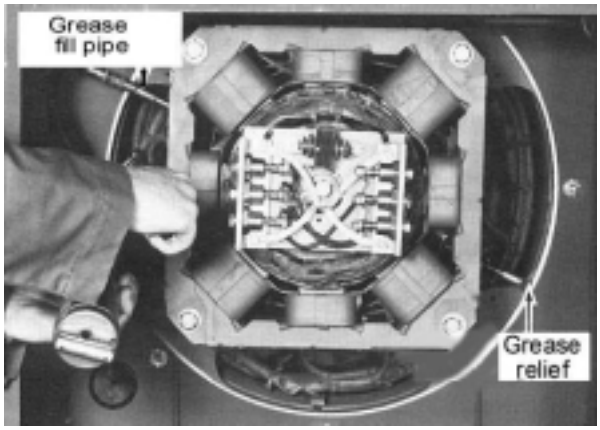

Figure 5-2

The amount of grease added is very important! Only enough grease should be added to replace the grease used by the bearing.

CAUTION: TOO MUCH GREASE CAN BE AS HARMFUL AS INSUFFICIENT GREASE. USE THE PROPER AMOUNT.

Type	Frame Size	Bearing Size	Amount of Grease			Intervals --- Max. hours or annually	
			Ounces	Cubic Inches	Teaspoons	60 Hz	50 Hz
Single Bearing Units	431,432, 433	314	1.2	2.1	7.0	6500	8400
	571,572, 573, 574	316	1.5	2.6	8.3	5600	7200
	741, 742, 743,744	322	2.4	4.2	14.0	3000	4500
Double Bearing Units	431,432	318	1.7	3.0	9.9	4600	6200
	571, 572, 573, 574	318	1.7	3.0	9.9	4600	6200
	741, 742, 743, 744	322	2.4	4.2	14.0	3000	4500

TABLE 5-3

During an overhaul, the grease reservoir should b thoroughly cleaned and new grease added. The reservoir should be 1/3 to 1/2 filled with new grease

DRYING ELECTRICAL INSULATION

Electrical components must be dried before placing in operation if tests indicate that the insulation resistance is below a safe value. (See Generator testing for test procedure.)

Machines that have been idle for sometime in unheated and damp locations, may have absorbed moisture. Sudden changes in temperature can cause condensation or the generator may have become wet by accident. Windings should be dried out thoroughly before being put into service. The following are recommended drying methods.

Space Heaters

Electric space heaters can be installed inside of the generator. When energized (from a power source other than the generator) they will heat and dry the inside of the generator. If an alternate source of electricity is not available, enclose the generator with a covering and insert heating units to raise the temperature 15-18 degrees F (8-10 degrees C) above the temperature outside of the enclosure. Leave a hole at the top of the enclosure to permit the escape of moisture.

Oven

Place the machine in an oven and bake it at a temperature not to exceed 194 F (90°C). The voltage regulator and any electronic component accessories must be removed from the generator when using this method.

Forced Air

A portable forced air heater can be used by directing heat into the air intake (conduit box) and running the generator with no load and without excitation (this can be accomplished by removing the regulator fuse). Heat at point of entry should not exceed 150° F (66° C).

"Short Circuit" Method

Using this method can dry out the generator quickly and thoroughly.

WARNING:
BE SURE THAT ALL OF THE FOLLOWING STEPS ARE PERFORMED AND ALL PRECAUTIONS TAKEN AS PERSONAL INJURY OR SERIOUS DAMAGE TO THE GENERATOR COULD RESULT.

1. Disconnect exciter leads Fl and F2 from the regulator.

2. Connect a battery or other dc power source approximately 20-35 volts to the exciter lead Fl and F2. An adjustable voltage source desirable, however, a rheostat (rated approximately 2 amps) in series with the dc power source will work.

3. Short circuit the generator output lead wires to each other (L1 to L2 to L3). If using jumpers, be sure they are large enough to carry full load amps.

4. Start the generator and measure the current through the output leads with a clip-on ammeter.

5. Adjust the voltage source to produce approximately 80% of the rated ac nameplate current but in no case exceed nameplate amps. If a adjustable source is not available and current is excessive, use a lower dc source voltage or larger resistor in series with the source.

Running time will be determined by the amount of moisture present in the machine. Insulation resistance checks should be taken every one to four hours until a fairly constant value obtained. (See section - Generator testing for instructions on measuring insulation resistance.)

6. After the generator is dry and the insulation resistance is brought up to specification remove the short circuit from the line lead disconnect the dc source and reconnect the F and F2 leads at the regulator. Be sure all connections are tight and correct before attempting to run the generator.

CLEANING METHODS

When electrical components get dirty, the insulation must be cleaned. There are a number of acceptable methods for cleaning the generator, each of which will necessitate disassembly of the unit. The kind of dirt, and when the unit must be returned to service will determine the method of cleaning. Drying after cleaning is necessary.

Whenever the generator is disassembled, the windings should be given a thorough inspection and the insulation cleaned, if necessary. The inspection should include the connection of the windings, insulation, and varnish coverage. Check the winding ties and coil supports. Look for any signs of coil movement or looseness and repair as required.

An electric motor repair shop in your area can normally assist with the proper cleaning of the generator windings. They may also be experienced in special problems (such as seacoast, marine, oilrig, mining, etc.) that may be peculiar to a certain area.

Solvents

A solvent is usually required to remove accumulated soil containing oil or grease. Only petroleum distillates should be used for cleaning electrical components. Petroleum solvents of the safety type with a flash point greater than 100° F (38° C) are recommended.

CAUTION: A SOLVENT THAT DOES NOT ATTACK EPOXY OR POLYESTER BASED MATERIALS SHOULD BE USED.

Apply the solvent with a soft brush or rag. Be careful not to damage the magnet wire or insulation on the windings.
Dry components thoroughly with moisture-free, low pressure compressed air.

Cloth and Compressed Air

Cleaning with a dry cloth may be satisfactory when components are small, the surfaces are accessible and only dry dirt is removed. Blowing dirt out with compressed air is usually effective particularly when the dirt has collected in places that cannot be reached with a cloth. Use clean dry air at 30 PSI (206 KPA).

Brushing and Vacuum Cleaning

Dry dust and dirt may be removed by brushing with bristle brushes followed by vacuum cleaning. Do not use wire brushes. Vacuum cleaning is an effective and desirable method of removing dry and loose dirt.

Shell Blasting

Air blasting with ground nut shells may be satisfactory for removal of hard dirt deposits from insulation. Use mild abrasives such as 12-20 mesh ground walnut shells.

Steam Cleaning

If the generator is completely disassembled, including bearings and electronic components, steam cleaning of the major parts and windings is very effective. However, the machine must be thoroughly dried in an oven to remove all moisture before the generator can be put back into service.

DISASSEMBLY

REMOVAL FROM PRIME MOVER

BE SURE ALL POWER IS OFF BEFORE SERVICING. FAILURE TO FOLLOW ALL SAFETY INSTRUCTIONS CAN RESULT IN SERIOUS INJURY OR DEATH.

NOTE: Before disconnecting any electrical wiring, be sure it is marked and can be identified for reinstallation. Re-label as required.

1. Remove conduit box covers (Figure 6-1 and 6-2)



Figure 6-1

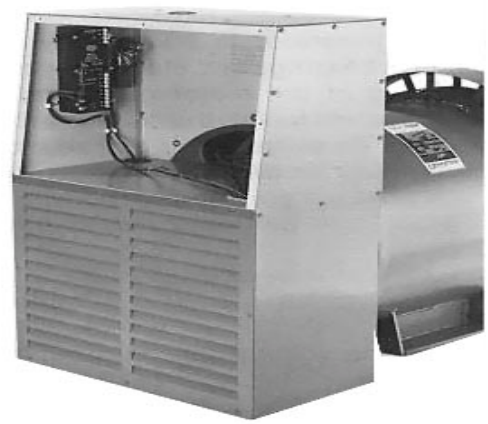

Figure 6-2

2. Disconnect all external wiring from the generator leads inside the conduit box.

3. Remove all conduits or ducting from the conduit box.

4. Attach a suitable hoist to the generator lifting

5. For single bearing generators, remove the bolts mounting the screen assembly to the SAE adapter and remove the screen. (Figure 6-3.)



Figure 6-3

(NOTE: Do not remove the drip cover from the screen assembly if so equipped)Remove the cap screws attaching the drive discs to the flywheel and remove the cap screws attaching the SAE adapter to the flywheel housing.

For two-bearing generators, disconnect the coupling or sheave and belts between the generator and prime mover. (Follow the coupling manufacturer's instructions for direct connection.)

WARNING
DO NOT APPLY ANY FORCE TO THE GENERATOR FAN FOR LIFTING OR ROTATING THE GENERATOR

CONDUIT BOX REMOVAL

1. Note the location and markings (re-mark as required) and remove connections from voltage regulator (Figure 6-4), capacitor (Figure 6-5), and any other conduit box mounted controls.

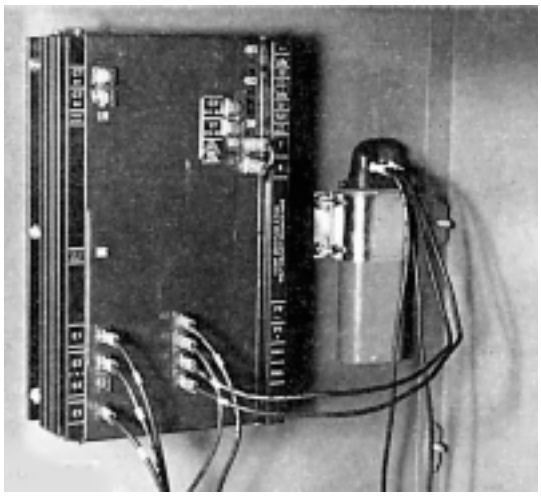

Figure 6-4

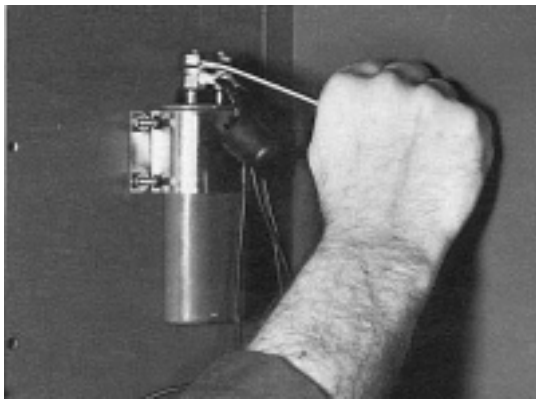

Figure 6-5

2. On generators equipped with bus bars, mark all connections and disassemble main stator (power) leads from the generator side of the bus bars.

3. Remove bolts holding conduit box in place. (Figure 6-6.)



Figure 6-6

4. Remove conduit box. (Figure 6-7).

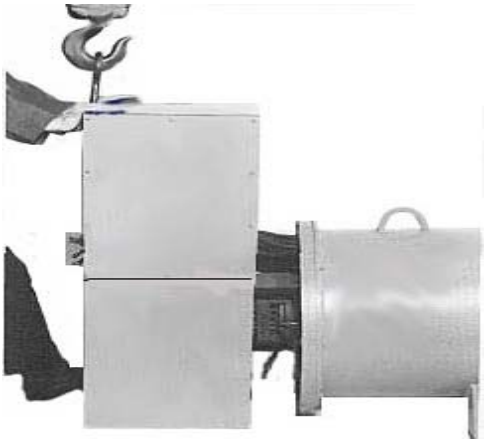

Figure 6-7

EXCITER STATOR (FIELD) REMOVAL

1. Disconnect Fl and F2 leads from the corresponding Fl and F2 terminals on the regulator.

2. Remove all cable ties so the Fl and F2 leads can be removed with the exciter stator. Remove the four cap screws and Belleville washers holding the exciter stator in place. (Figure 6-8.)



Figure 6-8

Remove the exciter stator. Using a lifting strap or fixture. (Figure 6-9.)

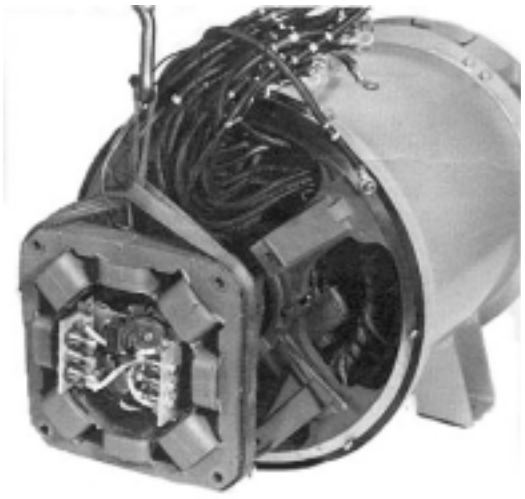

Figure 6-9

EXCITER ARMATURE (ROTOR) REMOVAL

1. Note markings and disconnect the main rotor leads coming out of the lead hole of the aluminum standoff plate from the rectifier aluminum angle. (Figure 6-10.)

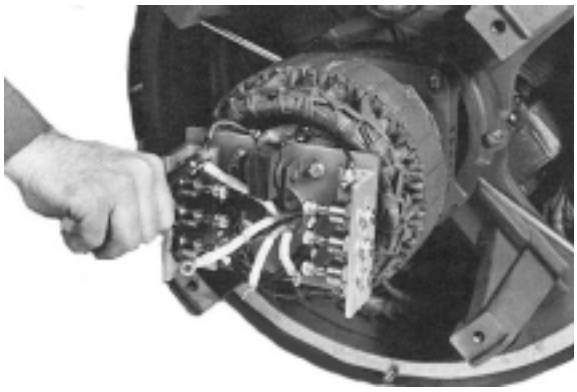

Figure 6-10

2. Remove the cap screw and Belleville washer that holds the exciter (rotor) armature to t generator shaft. (Figure 6-11.)

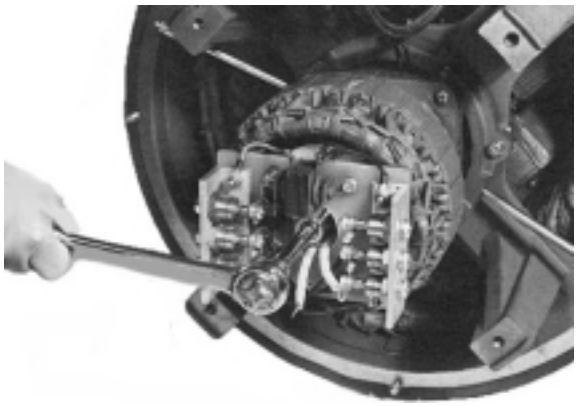

Figure 6-11

3.Use a six inch, 3/4-16NF, cap screw for a puller (See section 9.) The hole that the mounting bolt goes through is threaded. Screw the pull bolt into the hole and it will push against the end of the shaft. (Figure 6-12.)

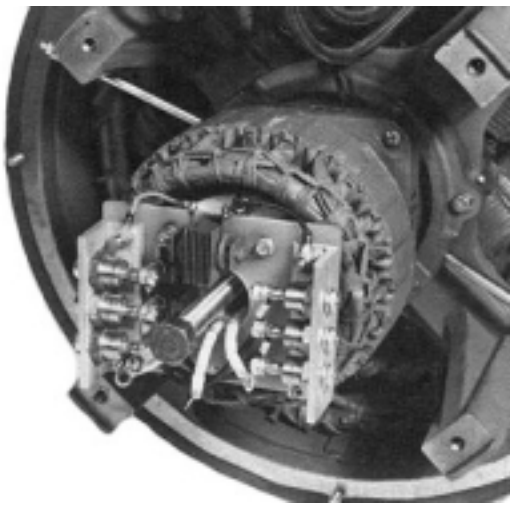

Figure 6-12

Carefully feed the main rotor leads through the hole as the exciter armature is removed. (Figure 6-13.)

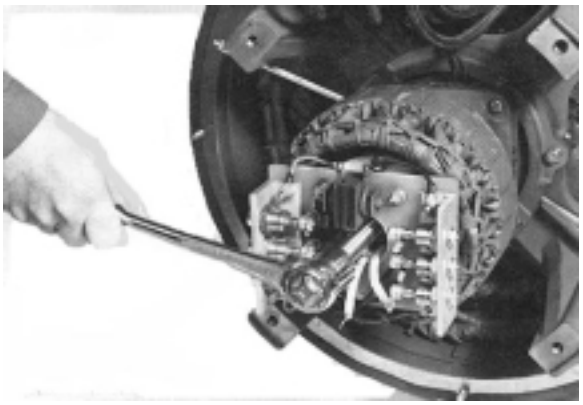

Figure 6-13

CAUTION:
DO NOT TIGHTEN THE PULLER BOLT BEYOND THE END OF THE THREADS. IF A BOLT WITH SUFFICIENT THREAD LENGTH CANNOT BE FOUND, USE A PIECE OF THREADED ROD WITH A NUT WELDED ON THE END.

PMG STATOR REMOVAL

1. Remove exciter armature. (Follow instructions found earlier in this section.)

2. Remove the PMG output leads from the capacitor (Figure 6-14) and loosen all cable ties so the leads can be removed with the PMG stator.

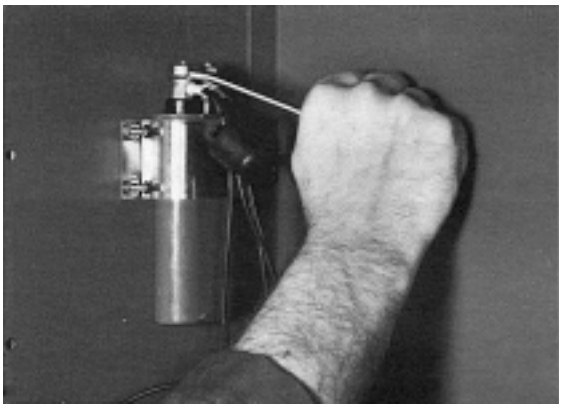

Figure 6-14

3. Note the position of the PMG stator leads that exit at the left inboard side or mark the stator so it can be reinstalled in the same position.

4. Remove the four mounting cap screws. (See Figure 6-15.)

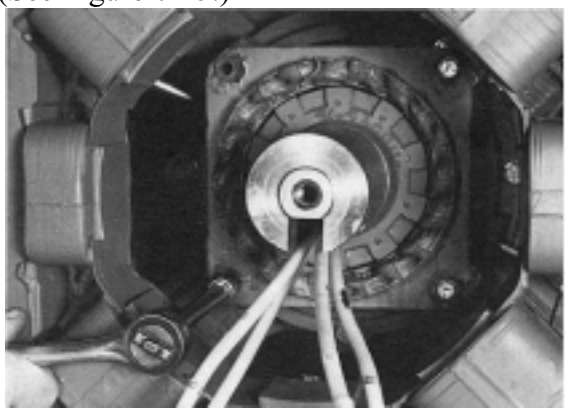

Figure 6-15

5. Carefully remove the PMG stator from its mounting pads and slide over the PMG rotor. The magnets used in the PMG are very strong and will resist removal of the PMG stator. (Figure 6-16.)

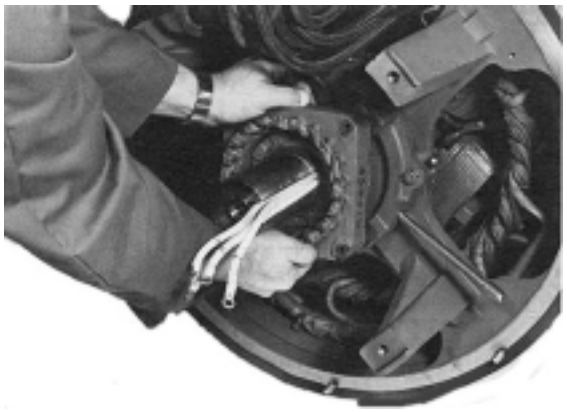

Figure 6-16

PMG ROTOR REMOVAL

1. Remove the exciter armature and PMG stator. (Follow instructions found earlier in this section.)

2. Remove the snap ring that holds the PMG rotor in place on the shaft. (Figure 6-17 and 6-18.)

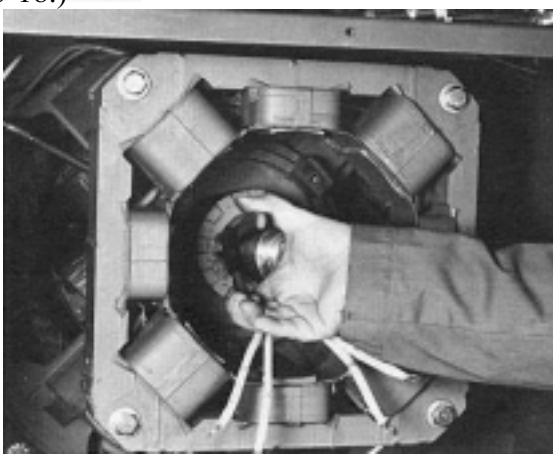

Figure 6-17

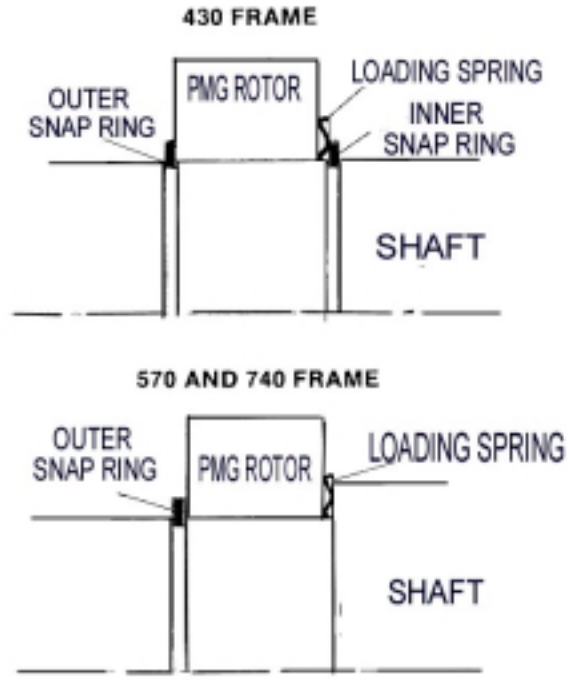

Figure 6-18

3. Slide the PMG rotor off of the shaft. (Figure 6-19.)

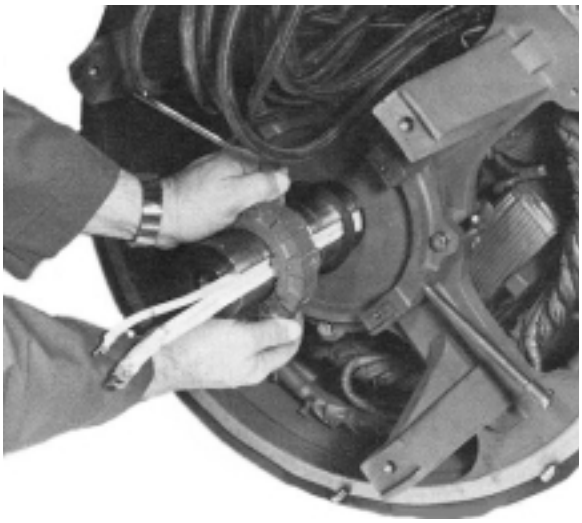

Figure 6-19

4. Remove the loading spring. (if the loading spring is not on the shaft, check to see if it is stuck on the back of the PMG rotor.).

5. On 430 frame generators a second snap ring is used inboard of the PMG rotor. (Larger generators have a step on the shaft.)

This snap ring must be removed before the generator main rotor can be removed. (Figure 6-20.)

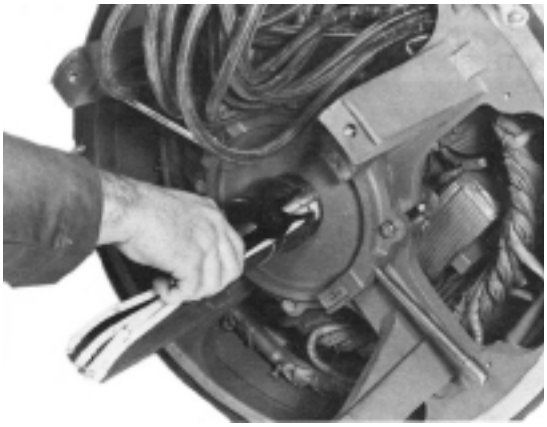

Figure 6-20

MAIN ROTOR REMOVAL

1. Remove the exciter armature and PMG.

2. For single bearing generators, remove the four cap screws holding the bearing caps to the front-end bracket. (Figure 6-21.) Remove the outer cap. (Figure 6-22.)

For two-bearing generators, remove the drive coupling or sheave and key from the shaft extension. Remove the four cap screws holding the bearing lock to the drive end bracket. (Figure 6-23.) Remove the four cap screws holding the bearing caps to the front-end bracket. (Figure 6-21.) Remove the outer cap. (Figure 6-22.)

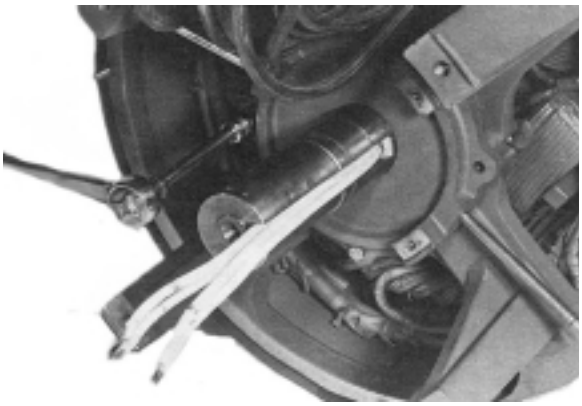

Figure 6-21

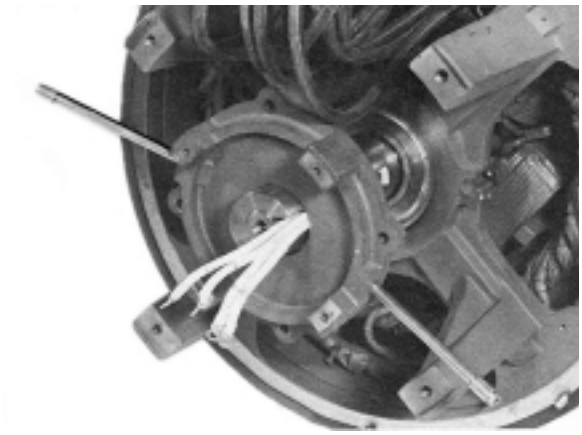

Figure 6-22



Figure 6-23

3. If the screen assembly is still mounted, remove bolts securing the screen assembly to the drive end bracket or the SAE adapter and remove the screen assembly. (Figure 6-24.) (NOTE: Do not remove the drip cover from the screen assembly if so equipped.)

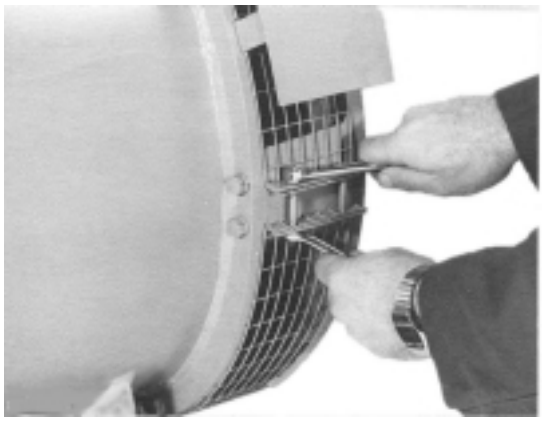

Figure 6-24

4. For single bearing generators, remove the cap screws and hardened washers holding the drive discs to the drive hub. (Figure 6-25.) Remove all drive discs (and spacers if any).

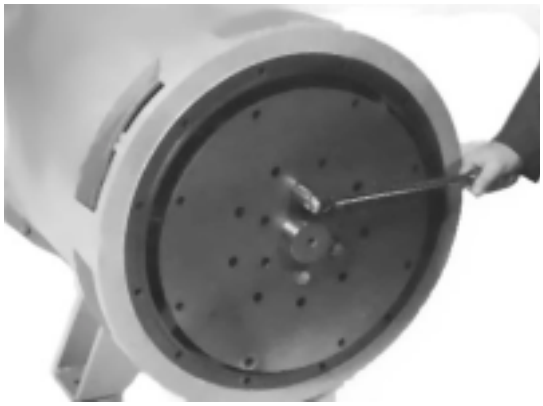

Figure 6-25

5. For single bearing generators, remove the cap screws holding the SAE adapter to the generator and remove the adapter. (Figure 6-26 and 6-27.)

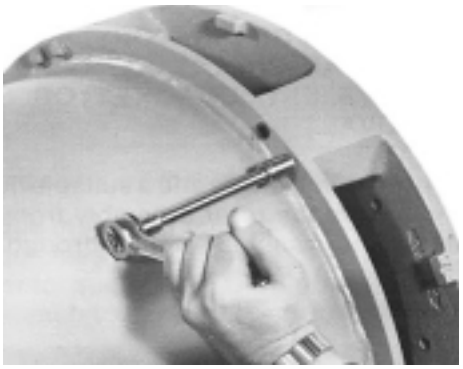

Figure 6-26



Figure 6-27

CAUTION: ON LARGE GENERATORS, A HOIST AND LIFTING STRAP SHOULD BE USED TO ASSIST IN DRIVE END BRACKET OR SAE ADAPTOR REMOVAL

For two bearing generators remove the cap screws holding the drive end bracket to the generator and remove the bracket (Figures 6-26 and figure 6-28)

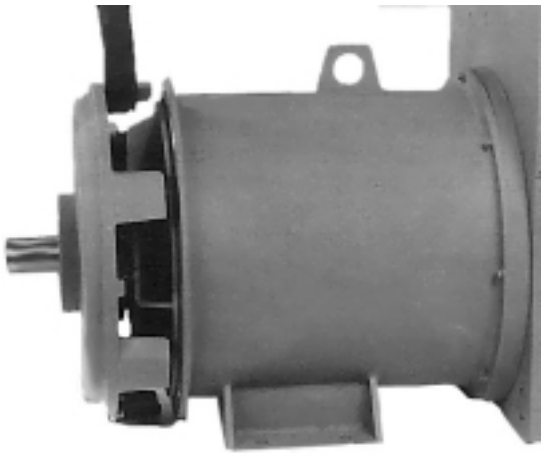

Figure 6-28

6. Using a rotor lifting fixture and a suitable hoist, carefully remove the rotor assembly from the main stator and frame assembly through the drive end. (Figure 6-29.)

CAUTION:
SPECIAL CARE SHOULD BE TAKEN WHEN REMOVING THE MAIN ROTOR, WINDING DAMAGE COULD RESULT IF THE ROTOR IS ALLOWED TO HIT THE MAIN STATOR.

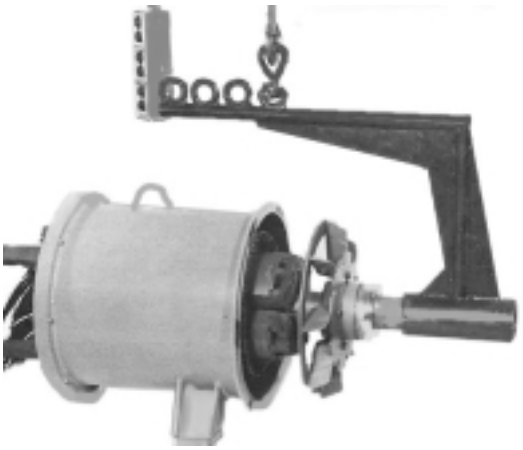

Figure 6-29

WARNING
DO NOT APPLY ANY FORCE TO THE GENERATOR FAN FOR LIFTING OR ROTATING THE GENERATOR ROTOR. DISREGARDING THESE INSTRUCTIONS MAY CAUSE PERSONAL INJURY OR EQUIPMENT DAMAGE.

FRONT END BRACKET REMOVAL

1. Remove front bracket mounting screws. (Figure 6-30.)

2. Remove the front-end bracket from the main stator assembly. (Figure 6-31.)

CAUTION: ON LARGE GENERATORS, A HOIST AND LIFTING STRAP SHOULD BE USED TO ASSIST IN THE FRONT END BRACKET REMOVAL

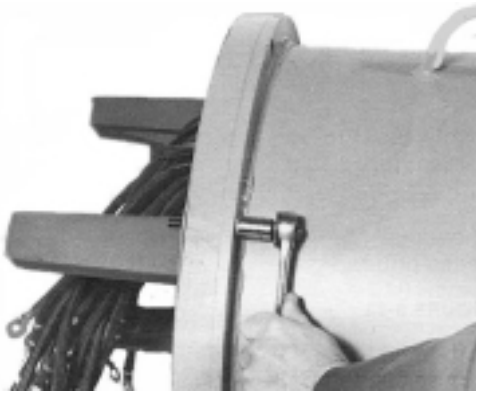

Figure 6-30

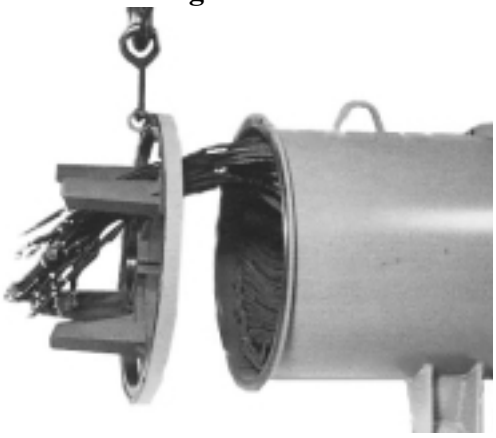

Figure 6-31

EXCITER INSPECTION

EXCITER STATOR

1. Clean dust and dirt from the exciter stator winding. (Figure 6-32.) (See section 5.)



Figure 6-32

2. Check the exciter stator for a loose, frayed, or burnt winding. Measure winding resistance and insulation resistance. (See section 8.)

Repair or replace as necessary. If field repair of the winding is necessary, contact Katolight for special winding procedures and materials.

3. Look for score marks in the bore of the exciter core caused by rubbing. (This could indicate bearing or assembly problems and should be investigated.)

EXCITER (ROTOR) ARMATURE

1. Clean dust and dirt from and rectifier assembly. (Figure 6-33) (See Section 5)

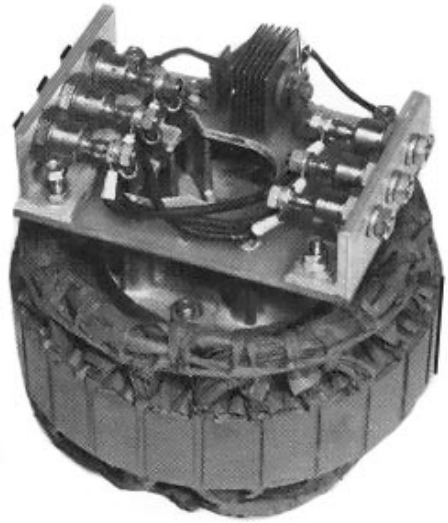

Figure 6-33

2. Check the exciter armature for burrs on the mating surfaces.

3. Check the rectifiers and surge protector for proper operation. Replace defective parts.

CAUTION: THREE FORWARD AND THREE REVERSE POLARITY DIODES ARE USED. BE SURE THE CORRECT PART IS INSTALLED IN THE CORRECT LOCATION. THE SURGE SUPRESSOR IS POLARIZED. OBSERVE POLARITY MARKINGS WHEN CHANGING THE SURGE SUPRESSOR

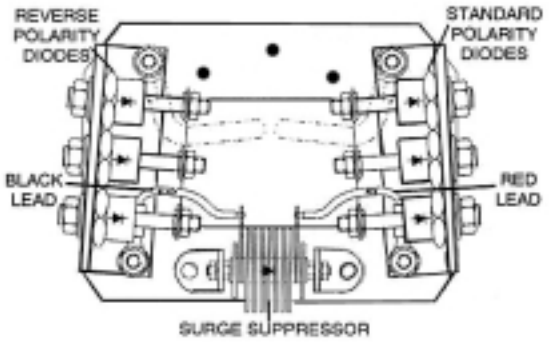

Figure 6-34

Torque mounting nuts to 80 in-lb. Torque lead terminal nuts to 25 in-lb. Never torque against the diode terminal - use a 7/16-in. wrench to support the terminal.

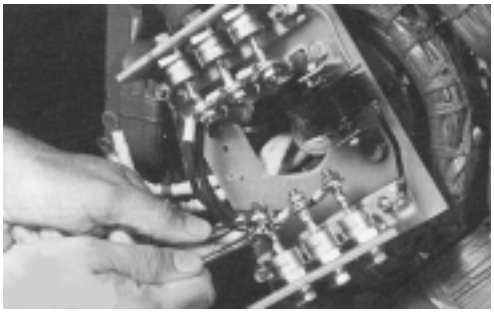

Figure 6-35

4. Check the exciter armature and rectifier assembly for loose, frayed, or burnt winding or loose connections. Measure winding resistance and insulation resistance. DO NOT megger diodes or surge suppressor. Repair or replace as necessary. If field repair of the winding is necessary, contact Katolight for special winding procedures and materials.

5. Look for score marks on the outside diameter of the armature core caused by rubbing. (This could indicate bearing or assembly problems and should be investigated.)

PMG INSPECTION

PMG STATOR

1. Clean dust and dirt from the PMG stator winding.

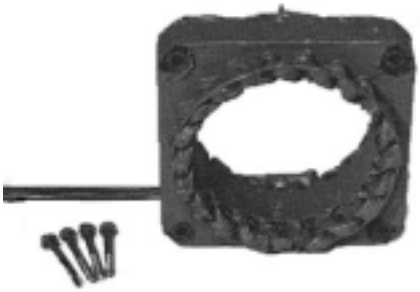

Figure 6-36

2. Check PMG stator for a loose, frayed, or burnt winding. Measure winding resistance and insulation resistance. (See section 8.) Repair or replace as necessary. Contact Katolight for special winding procedures and materials.

3. Look for score marks in the bore caused by rubbing.

PMG ROTOR

WARNING
THE PMG ROTOR USES VERY STRONG MAGNETS. KEEP AWAY FROM IRON AND STEEL PARTS THAT COULD BE DRAWN TO THE MAGNETS AS WELL AS OTHER COMPONENTS THAT CAN BE DAMAGED BY MAGNETIC FIELDS.



Figure 6-37

1. Clean dust and dirt from the PMG rotor.

2.Check to be sure all magnets are tightly bonded to the PMG rotor.

3.Check the bore and keyway of the PMG rotor for burrs or corrosion.

4.Look for score marks on the outside diameter caused by rubbing. (This could indicate bearing or assembly problems and should be investigated.)

5. Inspect snap rings and loading spring, replace as required.

MAIN ROTOR INSPECTION

BEARING

1. Check the bearing for damage or wear. Clean old grease from the bearing cap, and fill bearing cap grease cavity 1/3 to 1/2 full of r Chevron SRI (or equivalent).

CAUTION: If the bearing needs to be removed any reason, always install a new bearing.

2. If the bearing is to be replaced, remove with suitable puller. (Figure 6-38.)

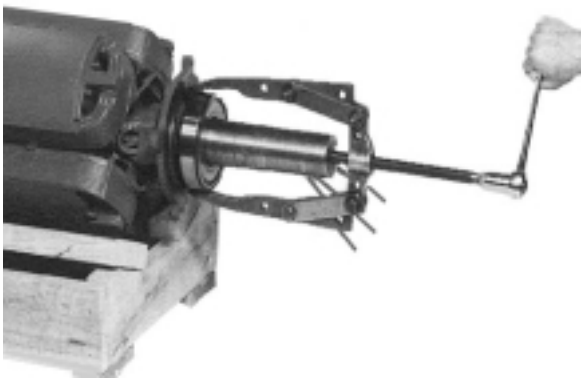

Figure 6-38

3.Be sure the inner bearing cap is on the shaft before installing the new bearing.

4. Heat the new bearing in an oven to a maximum temperature of 212°F (100°C). Apply a thin coat of clean lubricating oil to the press-fit area of rotor shaft. Install the bearing over the end of the shaft until it seats against the shaft shoulder as shown in Figure 6-39. The bearing should slide on the shaft and seated without excessive force. If the bearing binds on the shaft before being fully seated a piece of tubing, slightly larger than the press area, can be used to drive the bearing into place. Using light taps with a soft mallet, apply pressure to the inner race only.

CAUTION:
UNDER NO CIRCUMSTANCES SHOULD PRESSURE BE APPLI ED TO THE OUTER RACE OF THE BEARING, AS PERMANENT BEARING DAMAGE COULD RESULT.



Figure 6-39

Allow the bearing to cool for one hour before attempting to assemble the generator.

FAN

1. Check the fan for cracks or broken blades. Replace the fan if defective.

2. Mark the hub and fan for alignment, this is necessary to be sure the balance weights will be in the same position when the fan is reinstalled.

3. For single bearing generators. Remove the fan mounting cap screws (Figure 6-40) and slide the fan off the shaft. (Figure 6-41.) For two-bearing generators, remove the drive end bearing and bearing cap. (See bearing removal instructions.) Remove the fan mounting cap screws and slide fan off the shaft. (Figure 6-40 and 6-41.)

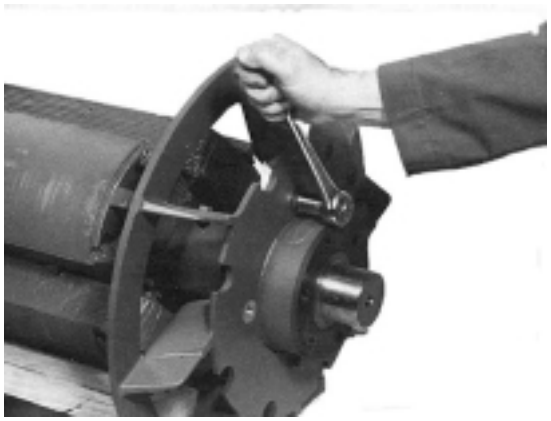

Figure 6-40

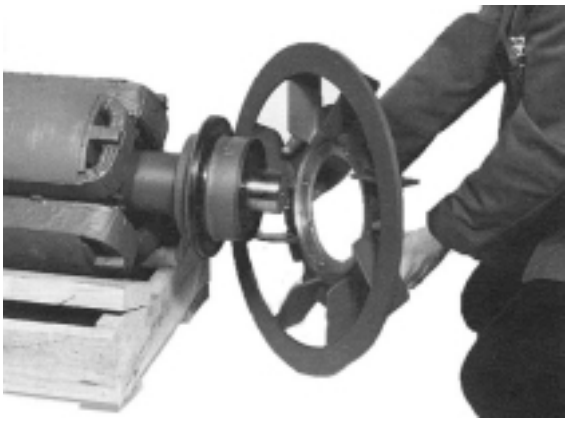

Figure 6-41

4. To reinstall, slide the fan on the shaft making sure the fan-mounting surface is toward the drive hub. Align reference marks (this is important for assembly balance) and mount the fan to the drive hub with the cap screws and Belleville washers. (Figure 6-42.) Torque the cap screws to 60 ft-lb. (81 N-m).

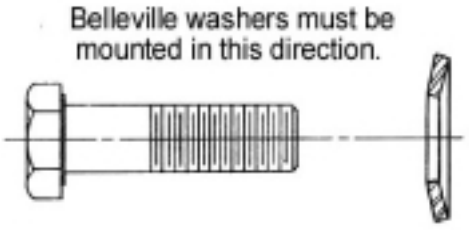

Figure 6-42

5. NOTE: Balance weights on the fan are for balance of the complete rotor assembly. The rotor assembly should be rebalance if a new fan has been installed.

6. On two-bearing generators, install bearing cap and new bearing according to the bearing assembly instructions. (Item A.)

Drive Hub (Single Bearing Generators)

1. Check the drive hub for cracks or stripped drive disc mounting holes. Replace the hub if defective.

2. If the hub is to be replaced, remove the fan (See Item B) and install a suitable puller to the hub. Remove the two set screws in the hub over the key. Using a torch, rapidly heat the hub at the outer diameter while tightening the puller. (This must be done rapidly before the heat can expand the shaft.) Remove the hub. (Figure 6-43)



Figure 6-43

3. To insure proper fan location, mark the new hub in the same place as the old hub relative to the keyway. Install key in shaft. Heat the new hub in an oven to 500°-600°F (260°-316°C). Use suitable heat resistant gloves, slide the hub over the key in the shaft until it seats against the shaft shoulder. (Figure 6-44.)

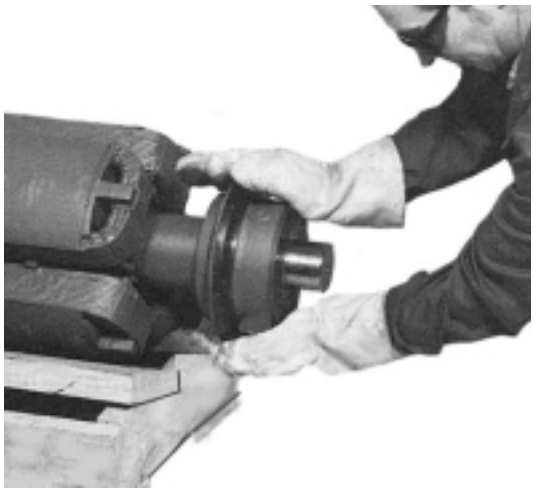

Figure 6-44

4. Allow the hub to cool for one hour. After the hub has cooled, tighten the set screws in the hub to 50 ft-lbs. (68 N.M.) torque. Match the alignment marks on the fan and hub and mount the fan. (See item B.)

5. Rebalancing the rotor assembly is not necessary if only the hub is replaced and the fan is mounted in the same location relative to the hub and shaft.

MAIN ROTOR CORE AND WINDINGS

1. Clean all parts. Remove dust and dirt from the rotor winding air passages with low-pressure, moisture-free air.

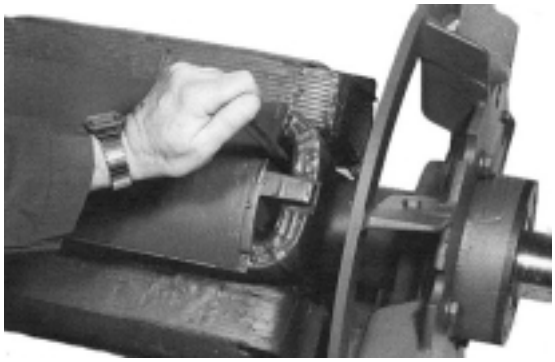

Figure 6-45

2. Check the rotor for loose, frayed, or burned windings. Measure winding resistance an insulation resistance. Test for shorted turns using an A-C impedance test A defective rotor winding must be rewound The rotor assembly must be rebalanced after any rework or repair has been completed.

DRIVE DISCS (SINGLE BEARING GENERATORS ONLY)

1. Inspect the drive discs for distorted or bent edges. (Figure 6-46) Inspect for worn mounting holes. Replace all defective discs as necessary.

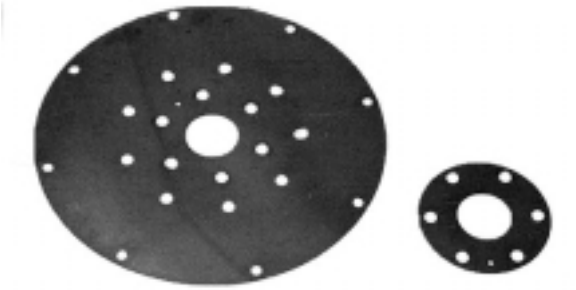

Figure 6-46

2. Inspect the drive disc mounting cap screws for damaged threads. Replace cap screws if damaged.

FRONT (EXCITER) END BRACKET INSPECTION

1. Remove the filler and drain grease pipes and the grease plugs from outer bearing cap. (Figure 6-47.)



Figure 6-47

2. Clean the end bracket, outer bearing cap, grease pipes, and cap screws to remove all dust, dirt, and grease.

3. Inspect the cap screws for stripped threads and replace if defective.

4. Inspect the end bracket for stripped threads, cracks, and burred or rough mating surfaces. Inspect the bearing bore for burrs or wear. If the bracket shows excessive bearing bore wear, it should be repaired or replaced. (Figure 6-48.)



Figure 6-48

5. Inspect the mounting pads for the PMG stator and exciter stator. Be sure they are smooth, clean, and free of any burrs or rust. That could interfere with proper alignment. (Figure 6-47 and 6-48.)

6. Re-assemble the grease pipes and fittings to the bearing cap.

DRIVE END BRACKET OR SAE ADAPTER INSPECTION

1. For two-bearing generators, remove the grease plugs from the bracket.

2. Clean the bracket or adapter, cap screws and screen assembly to remove all dust, dirt, and grease.

3. Inspect the cap screws for stripped threads and replace if defective.

4. Inspect the bracket or adapter for stripped threads, cracks, and burred or rough mating surfaces. (Figure 6-49 and 6-50.)



Figure 6-49



Figure 6-50

5. For two-bearing generators, inspect the bearing bore for burrs or wear. If the drive end bracket shows excessive bearing bore wear, it should be repaired or replaced.

MAIN STATOR INSPECTION

1. Clean dust and dirt from the stator frame and winding. (Figure 6-51.) (See section 5.)



Figure 6-51

2. Inspect the frame for stripped threads, cracks, burred mating surfaces, or other damage.

3. Inspect the stator for a loose, frayed, or burnt winding. Measure winding resistance and insulation resistance. (See section 8.) Repair or replace as necessary.

FRONT END BRACKET INSTALLATION

1.Install two guide pins (threaded rod can be used) into the generator side of the end bracket mounting holes. Align the guide pins with the holes in the generator frame and slide the bracket onto the frame. (Figure 6-52.) Install bracket mounting cap screws. (Figure 6-53.)

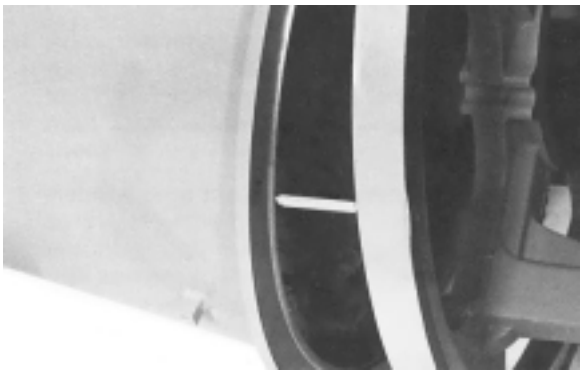

Figure 6-52

CAUTION: ON LARGE GENERATORS, A HOIST AND LIFTING STRAP SHOULD BE USED TO ASSIST IN THE FRONT END BRACKET INSTALLATION.

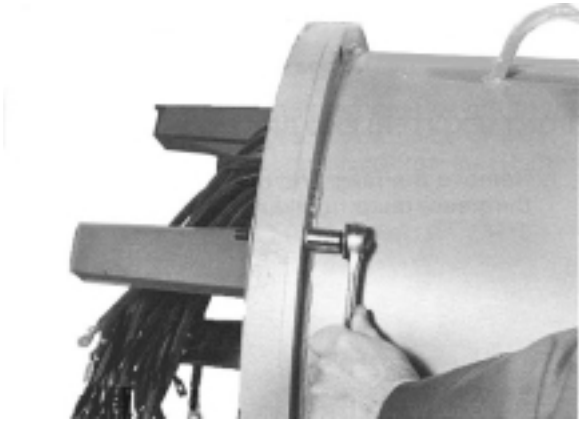

Figure 6-53

2. Remove the two guide pins and insert the remaining cap screws and torque to specifications given in section 12.

MAIN ROTOR INSTALLATION

1. Grease bearing cavity and bearing with Chevron SRI (or equivalent) grease.

2. Using a rotor lifting fixture and a suitable hoist, carefully install the rotor assembly into the main stator assembly through the drive end. (Figure 6-54.) Carefully feed the rotor leads through the front-end bracket shaft hole as the rotor is installed.

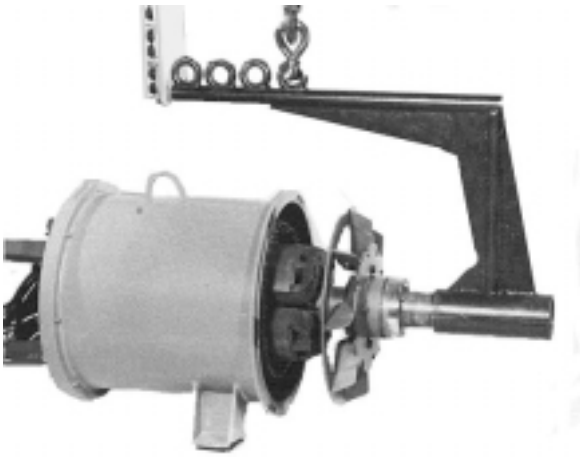

Figure 6-54

CAUTION:
SPECIAL CARE SHOULD BE TAKEN WHEN INSTALLINGTHE ROTOR ASSEMBLY. WINDING DAMAGE COULD RESULT IF THE ROTOR IS ALLOWED TO HIT THE MAIN STATOR.

WARNING
DO NOT APPLY ANY FORCE TO THE GENERATOR FAN FOR LIFTING OR ROTATING THE GENERATOR ROTOR. DISREGARDING THESE INSTRUCTIONS MAY CAUSE PERSONAL INJURY OR EQUIPMENT DAMAGE.

3. For single bearing generators, slide the SAE adapter over the fan and secure to the main stator and frame assembly with cap screws torqued per section 12. (Figure 6-55 and 6-56.) It may be necessary to raise the rotor assembly slightly to allow the mounting of the SAE adapter.

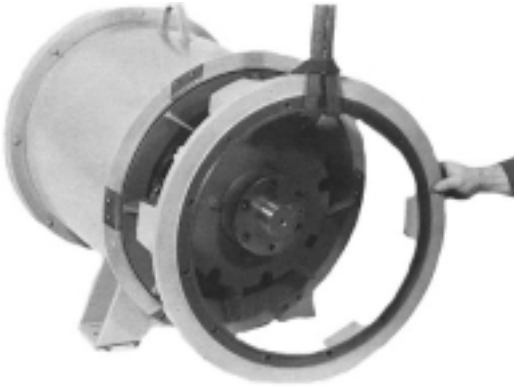

Figure 6-55



Figure 6-56

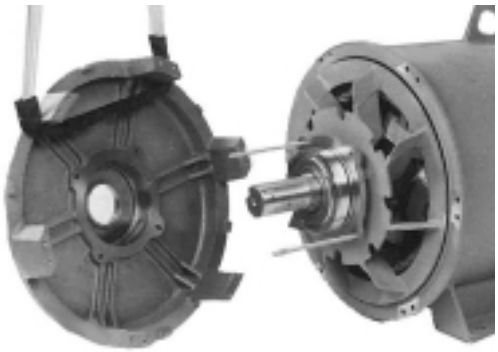

Figure 6-57

For two-bearing generators, insert two guide pins in the rear bearing lock holes. (Figure 6-57.) Fill the grease cavity of the drive end bracket 1/3 to 1/2 full of Chevron SRI (or equivalent) grease. Assemble all grease plugs in the bracket. Mount the bracket on the bearing and guide the bearing lock pins through the bracket holes. (Figure 6-58.)

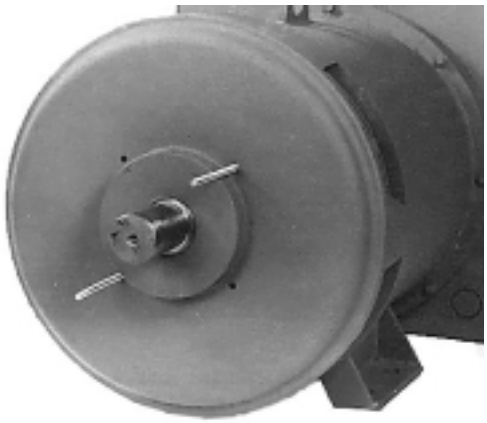

Figure 6-58

Align the drive end bracket and mount with the cap screws. (Figure 6-59.) Insert two cap screws with lock washers into the bearing lock and tighten. Remove the guide pins and replace with the remaining two cap screws with lock washers. Torque bearing cap screws to 25 lb.-ft (34 NM). Torque bracket mounting cap screws per specifications given in section 12.

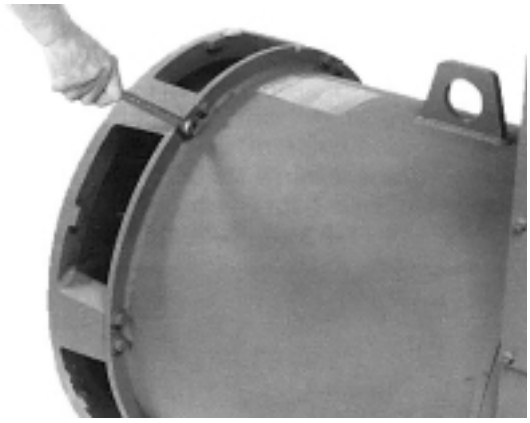

Figure 6-59

CAUTION:
ON LARGE GENERATORS, A HOIST AND LIFTING STRAP SHOULD BE USED TOASSIST IN THE DRIVE END BRACKET OR THE SAE ADAPTER ASSEMBLY.

4. For single bearing generators, insert a guide stud into the drive hub. Position all spacers (if any), then all drive discs, one at a time until all discs are installed. (Figure 6-61.)

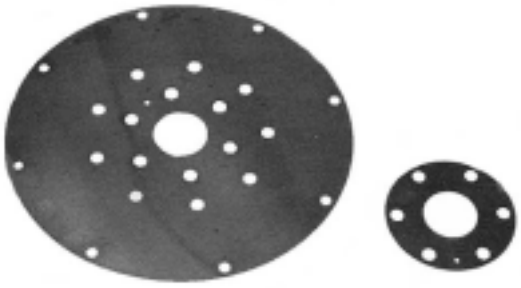

Figure 6-61

Make sure that all disc mounting holes at the inner and outer diameter are properly aligned. Secure the discs with the grade eight 5/8-18 cap screws and hardened washers. Torque to 192 ft-lb. (260 N-m). Torque the bolts in sequence according to Figure 6-62.

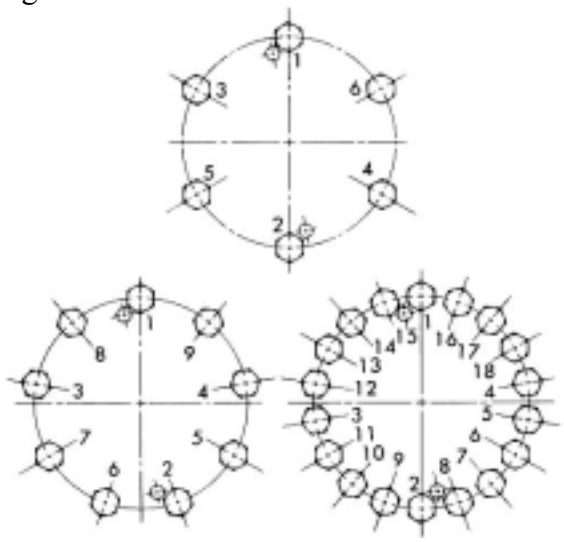

Figure 6-62

5. Install the outer bearing cap on the exciter end. (Figure 6-63.) Align holes in inner and outer bearing cap and install cap screws. Torque to 25 lb.-ft (34 N-M) (Figure 6-64.)

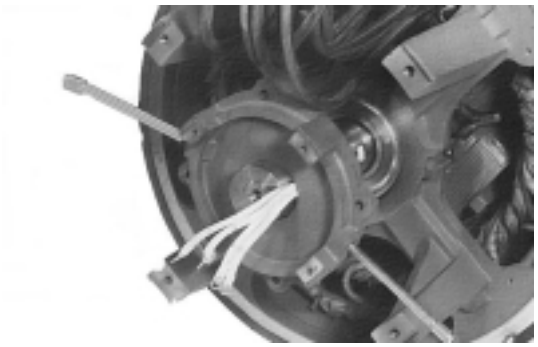

Figure 6-63

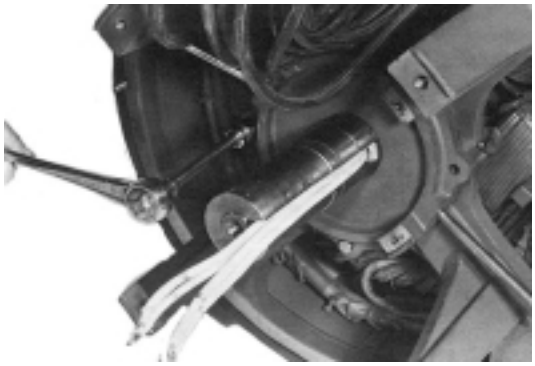

Figure 6-64

PMG INSTALLATION

1. Install inboard snap ring, where supplied, and loading spring on shaft. (Figure 6-65.)

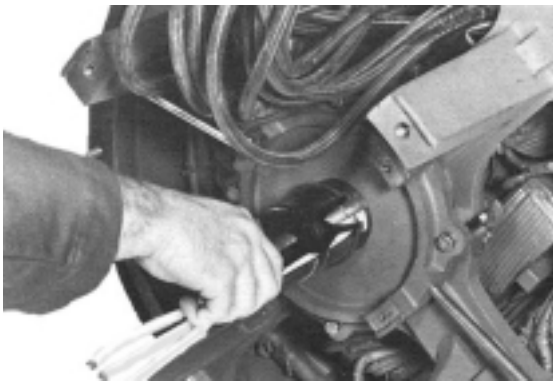

Figure 6-65

2. Slide PMG rotor onto shaft. (Figure 6-66.)

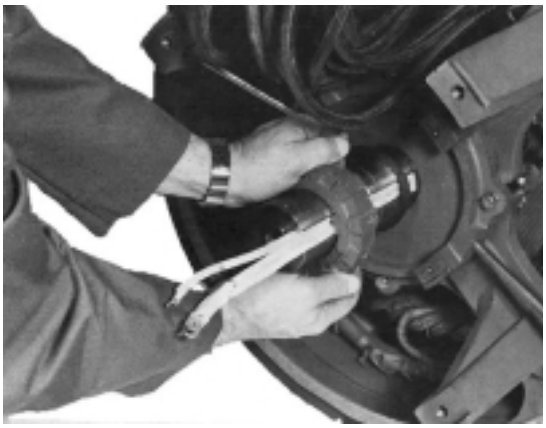

Figure 6-66

3. Install snap ring. (Figure 6-67.) Use a piece of pipe slightly larger than the shaft (2-3/4 inches) to push the rotor back against the loading spring until the snap ring seats in the slot. (Figure 6-68.)

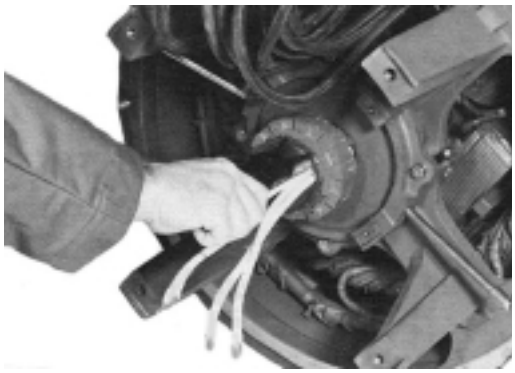

Figure 6-67

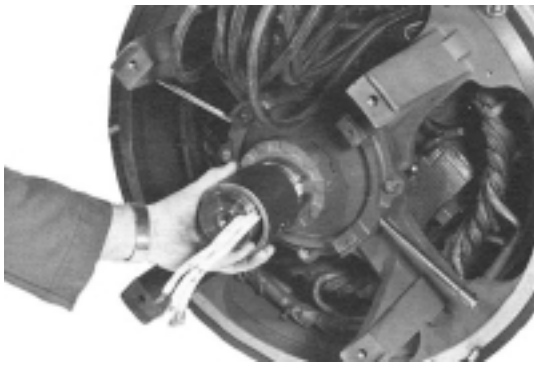

Figure 6-68

4. Install the PMG stator on its mounting pads, with the leads in the left (9:00 o'clock) inboard position, and secure with the four

mounting cap screws and Belleville washers. (Figure 6-69 and 6-72.)
Torque to 4 ft-lb. (5 N-M).



Figure 6-69

5. Route and secure PMG moving parts.

EXCITER INSTALLATION

1. Attach a wire to the main rotor leads and feed the wire through the armature bore and the lead hole in the aluminum standoff plate. On larger exciters, it will be helpful to install a guide pin in the end of the shaft to support the armature while fishing the rotor leads through. (Figure 6-70.)

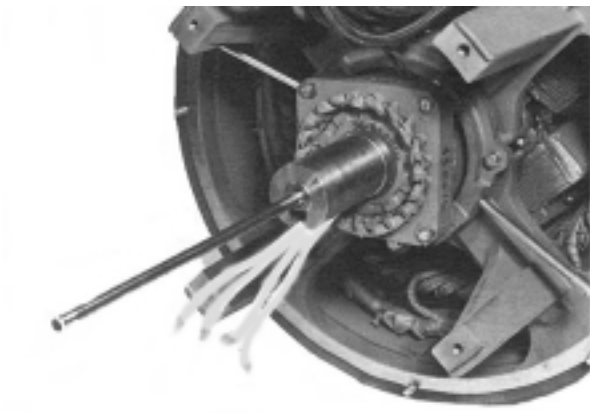

Figure 6-70

Align the key in the armature bore to the keyway in the shaft. Slide the armature on the shaft while feeding the main rotor leads through the lead hole in the aluminum standoff plate. (Figure 6-71.)

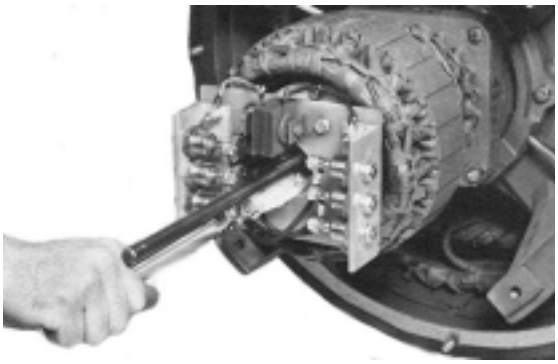

Figure 6-71

Insert the cap screw and Belleville washer (Figure 6-72.) through the mounting hole in the aluminum standoff plate and secure to the shaft (Figure 6-73). Tighten the cap screw until the armature seats on the shaft. Torque to 84 lb.-ft (114 N-M).



Figure 6-72

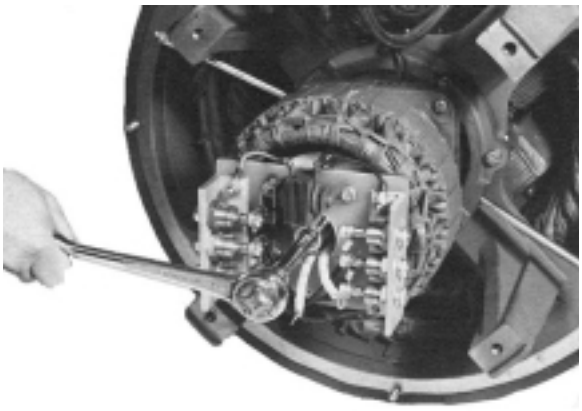

Figure 6-73

2. Observe the polarity markings and connect the main rotor leads to the rectifier

assembly. (Figure 6-74.) Torque the nuts to 4 ft-lb. (5.4 N-M).

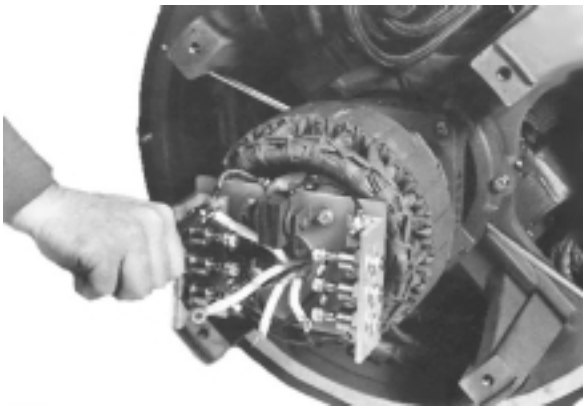

Figure 6-74

3. Position the exciter field leads at the left (9:o'clock) inboard position. Using a suitable lifting device, mount the exciter stator on the front e bracket mounting pads and align the mounting holes. (Figure 6-75.) Mount the cap screws with Belleville washers. (Figure 6-72.) Torque t cap screws to 60 ft-lb. (81 N-M). Route and secure the exciter stator leads away from any moving parts.

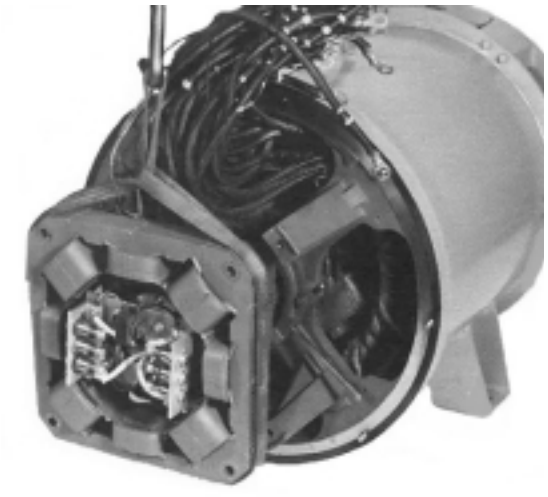

Figure 6-75

CONDUIT BOX INSTALLATION

1. Install the conduit box over the main stator leads (be sure the leads are in the upper compartment and secure with bolts and lock washers. (Fig 6-76 and 6-77.)

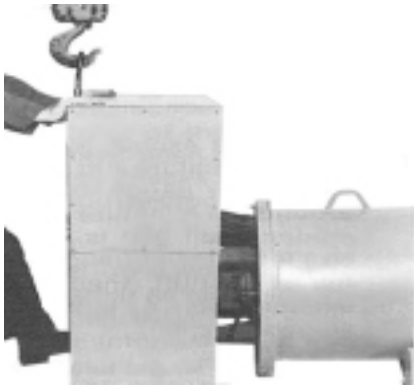

Figure 6-76



Figure 6-77

2. On generators with bus bar assemblies, reassemble main stator leads and insulating blocks to bus bars. (Figure 6-78.)

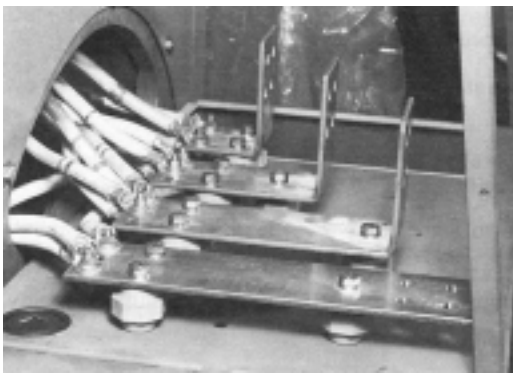

Figure 6-78

3. Reconnect exciter leads, PMG leads and other accessories according to the connection prints and markings installed before disassembly.

ASSEMBLY TO PRIME MOVER

1. Attach a suitable hoist to the generator lifting lugs, and move the generator until the generator foot mounting holes are aligned with the base and slightly above.

2. For single bearing generators, if the screen assembly is mounted on the adapter, remove the mounting bolts and remove the screen. (Figure 6-79.)

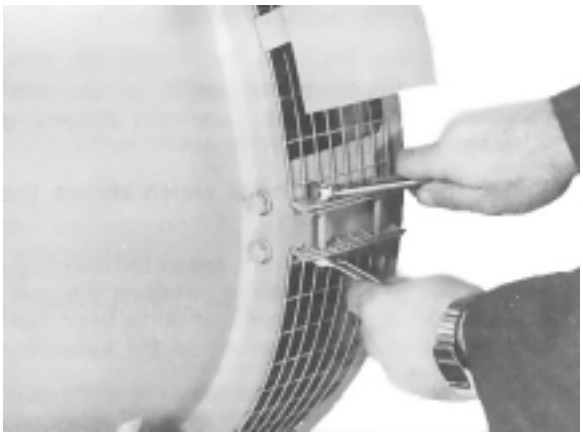

Figure 6-79

(NOTE: Do not remove the drip cover from the screen assembly if so equipped.) Insert two guide pins in the flywheel and two in the flywheel housing. Adjust the generator position until the drive discs are piloted in the flywheel. Remove the guide pins and secure the discs with Grade 8 place bolts and hardened washers or Grade 8 cap screws and heavy series lockwashers.

Torque per specifications given in section 12.

Position the generator so that the SAE adapter mates with the flywheel housing.

WARNING
DO NOT APPLY ANY FORCE TO THE GENERATOR FAN FOR LIFTING OR ROTATING THE GENERATOR ROTOR. DISREGARDING THESE INSTRUCTIONS MAY CAUSE PERSONAL INJUY OR EQUIPMENT DAMAGE.

CAUTION:
DO NOT FORCE THE ALIGNMENT OFTHE UNITS. SHIFT THE GENERATOR FROM SIDE TO SIDE OR RAISE OR LOWER WITH A LIFTING DEVICE AS NECESSARY.

It may be necessary to use shims under the mounting feet of either the generator or the prime mover to obtain proper alignment. Use the same shims as removed under disassembly or proceed as follows: Using the extreme bottom four cap screws, mount the SAE adapter to the flywheel housing.

With a .0015 to .002 inch feeler gauge at the extreme top of the adapter to flywheel housing fit, raise the generator or lower the prime mover until the gauge is snug. Relieve just enough to release the feeler gauge and torque the remaining SAE adapter cap screws to the flywheel housing.

Mount the screen assembly and tighten the mounting bolts.

For two-bearing generators, align the coupling halves or sheaves between the generator and the prime mover by adding shims under the feet.

3. Shim under the generator feet for proper support, ensuring that the generator mounting surfaces are level.

4. Install the mounting bolts that secure the generator to the base.

5. For two bearing generators, assemble the coupling halves or sheave belts between the generator and the prime mover. (Follow the coupling manufacturer's instructions for assembly and alignment.)

6. Connect all conduits and ducting to the conduit box.

7. Connect all external wiring to the generator inside the conduit box.

8. Check the exciter air gap (the gap between exciter armature and stator) by inserting a .010 inch feeler gauge in the gap and rotating around the armature diameter to ensure the minimum air gap is available. (See Figure 80.) If the feeler gauge cannot be rotated full revolution, then check for a "cocked" exciter stator or loose stator mounting screws.

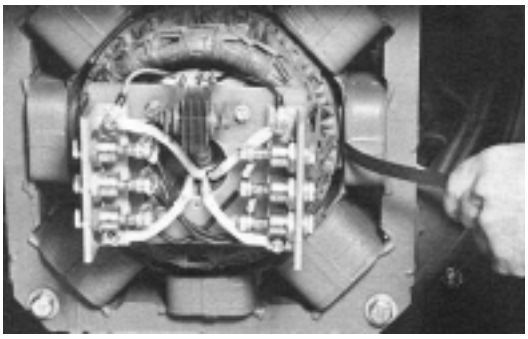

Figure 6-80

NOTE: On single bearing units, the exciter air gap cannot be checked properly until the generator is mounted to the prime mover.

9. Install the conduit box covers.

TROUBLESHOOTING

INTRODUCTION

This section is intended to suggest a systematic approach to locating and correcting generator or regulator malfunctions. The sections are arranged according to the symptoms of the problem. The steps in each section have been arranged in an attempt to do the easy checks first then to prevent further damage when troubleshooting a disabled machine.

The first and perhaps most important step of troubleshooting should be to gather as much information as possible from personnel who may have been present during the failure. Information on how long the generator had been running, what loads were on the line, weather conditions, what protective equipment operated, etc., can help isolate the problem.

Always make a thorough visual inspection to check for any obvious problems before attempting to run the generator.

WARNING
HIGH VOLTAGES CAN BE PRESENT AT THE GENERATOR AND REGULATOR TERMINALS. HIGH RESIDUAL VOLTAGES CAN BE PRESENT EVEN WITH THE REGULATORDISCONNECTED OR ITS FUSES REMOVED. SOME EQUIPMENT (SUCH AS SPACEHEATERS) MAY BE ENERGIZED WHEN THE GENERATOR IS OFF. TOOLS, EQUIPMENT, CLOTHING, AND YOUR BODY MUST BE KEPT CLEAR OF ROTATING PARTS AND ELECTRICAL CONNECTIONS.

SPECIAL CAUTION MUST BE TAKEN DURING TROUBLESHOOTING SINCE PROTECTIVE COVERS AND SAFETY DEVICES MAY BE DISABLED TO GAIN ACCESS AND MAKE TESTS.

BE CAREFUL. SERIOUS PERSONAL INJURY OR DEATH CAN RESULT FROM THESE HAZARDS. CONSULT QUALIFIED PERSONNEL WITH ANY QUESTIONS.

SYMPTOM:		
NO VOLTAGE OR RESIDUAL VOLTAGE	Regulator Fuse Blown Check fuse with ohmmeter.	Replace bad fuse.
	Voltmeter Off	Check to be sure meter phase selector switch is not in the off position.
	Defective Voltmeter	Verify proper operation of panel meter with another meter that is known to be accurate.
	Incorrect Connections	Verify generator connections.
	Defective Connections/Wiring	Inspect all wiring for grounds, open circuits & short circuits.
	No Regulator Input	Measure voltage at regulator input (PMG output)
	Defective Diodes, Surge Suppressor	Test generator with constant excitation (12 volt battery test) refer or Generator Windings
	Voltage Regulator Protective Shutdown Circuits are Operating	Correct problem and adjust regulator. Refer to regulator manual.
	Voltage Regulator Inoperative	Adjust or replace regulator. Refer to regulator manual.

LOW VOLTAGE - NO LOAD	Under speed Operation	Check speed using tachometers and/or frequency meters.
	Defective Voltmeter	Verify operation of panel meter with another meter that is known to be accurate.
	Residual Voltage	Disconnect Fl and F2 leads at the voltage regulator. If voltage goes down continue on to next step, if voltage does not change refer to troubleshooting for symptoms of "No Voltage - No Residual Voltage".
	Incorrect Generator Connections	Verify generator connections refer to drawings supplied V generator set and section 3.
	Defective Connections / Wiring	Inspect all wiring for grounds, open circuits, short circuits, and loose and dirty connections.
	Regulator Adjustments	Adjust regulator. Refer to regulator manual. Check exciter field volts.
	Defective Diodes, Surge Suppressor, Generator Windings	Test generator with constant excitation (12 volt battery test)
	Voltage Regulator not Operating	Adjust or replace regulator. Refer to regulator manual. Properly

LOW VOLTAGE WHEN LOAD IS APPLIED	Overload	Measure amps and verify that the load does not exceed nameplate rating of the generator
	Defective Ammeter	Verify operation of ammeter by using a separate meter known to be accurate
	Droop Circuit	If the generator set is equipped for paralleling, some voltage droop is normal as load increases. Refer to the regulator instruction manual
	Continue troubleshooting for symptoms “Generator Produces Low Voltage - No Load”.	Continue troubleshooting for symptoms “Generator Produces Low Voltage - No Load”.
HIGH VOLTAGE	Defective Voltmeter	Verify operation of panel meter with another meter that is known to be accurate
	Incorrect Operating Speed	Verify speed with tachometer or frequency meter.
	Incorrect Connections	Verify generator connections Refer to drawings supplied with generator set
	Defective Connections / Wiring	Inspect all wiring for grounds, open circuits, and short circuits.
	Regulator Adjustments	Adjust regulator. Refer to regulator manual
	Diode Polarity Incorrect	Check diodes, verify proper diodes are installed and polarity is correct.
	Voltage Regulator not Operating	Adjust or replace regulator. Refer to regulator instruction manual.

VOLTAGE IS FLUCTUATING	Incorrect Speed	Verify speed with tachometer or frequency meter.
	Unstable Speed	Verify governor stability.
	Voltage Regulator Stability	Adjust regulator stability. Refer to regulator manual.
	Defective / Loose Connections	Inspect all wiring for loose or dirty connections.
	Defective Diodes, Surge Suppressor or Generator Windings	Test generator with constant excitation (12-volt battery test).
	Remote Voltage Adjust	Check operation. Refer to regulator manual.
	Defective Regulator	Replace regulator. Refer to regulator manual.
OPERATES SATISFACTORILY WHEN COLD, BUT SHUTS DOWN WHEN WARM	Regulator Shutdown on Over Temperature	Correct cooling problems. Refer to regulator manual.
BUILDS VOLTAGE FROM STARTUP,THEN GOES TO LOW (RESIDUAL) VOLTAGE	Regulator Protective Circuit is Operating	Check indicators on regulator. Correct problems and adjust as required. Refer to regulator manual.
EQUIPMENT RUNS NORMALLY ON UTILITY POWER, BUT WILL NOT RUN ON GENERATOR SET	Voltage Waveform is Distorted	Analyze load. Excessive SCR (Thyristor) loading will cause distortion. Some equipment may be sensitive to distorted waveforms. Refer to Katolight.

GENERATOR TESTING

VISUAL INSPECTION

Whenever testing and troubleshooting a generator set, it is always a good practice to make a thorough visual inspection. Remove covers and look for any obvious problems. Burnt windings, broken connectors, leads, mounting brackets, etc., can usually be identified. Look for any loose or frayed insulation, loose or dirty connections, broken wires. Be sure all wiring is clear of rotating parts.

Verify that the generator is connected for the voltage required this is especially important on new installations.

Check for any foreign objects, loose nuts, bolts, and electrical connectors. Clear paper, leaves, building materials, etc., that could be sucked into the generator. (Generators are air-cooled. Air enters the lower portion of the conduit box.) Check the air gap for clearance or obstructions (main generator and exciter).

If possible, rotate the generator rotor by hand to be sure it turns freely.

If serious problems can be identified before attempting to operate the machine, additional damage can be avoided.

CONSTANT EXCITATION (12V BATTERY) TEST

THEORY: The generator output voltage is dependent on generator speed, generator design, load, and exciter input current. If the generator speed and exciter input are known, the output voltage at no load can be measured and compared to the design value. Problems can be isolated to either the generator or regulator system by using this test.

TEST PROCEDURE:

1. Shut the generator set down.

2. Connect a voltmeter to the generator output.

3. Disconnect the Fl and F2 leads at the regulator.

4. Connect a 12-volt battery capable of supplying 1 amp to the Fl and F2 leads. Fl is plus **(+),** F2 is minus (—).

CAUTION: Beware of arcing when connecting leads. Stay clear of battery vents. Escaping hydrogen gas can explode. If hazardous conditions exist - use a suitable switch to connect or disconnect the battery.

5. With no load on the generator, (main breakers open) run generator at rated speed.

6. Measure the generator output voltage.

7. Shut generator down.

8. Disconnect battery (see Caution - Step 3).

9. Compare voltage reading with value shown in section 12.

Conclusion: If voltage readings are normal, the main generator and exciter are operating properly. Troubleshooting should continue with the regulator. If readings are not normal the problem is in the generator. Continue testing diodes, surge suppressor, windings.

MEASURING VOLTAGES

When testing the generator and regulator, the most frequent (and usually easiest) measurement will be a voltage. The generator will need to be running at rated speed and may have some of the protective guards and covers removed. BE CAREFUL. Keep yourself and your test leads out of the way. It is best to shut the unit down when connecting meters. When using alligator clips or push on terminals, be sure the leads re supported so vibration does not shake them loose when running the generator set.

See figure 8-1 for measurement points and expected meter range settings.
When in doubt, start with a higher range and work down.
Consult meter instruction manual to verify its operation and limitations.

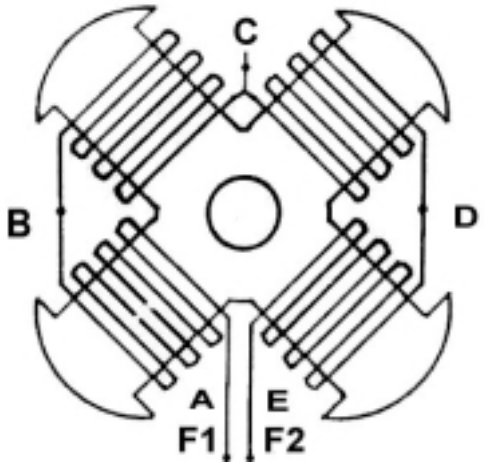

Figure 8-1

TYPICAL VOLTAGE MEASUREMENTS

Voltage Measurement	Test Point	Meter/Range Selection Requirement
Generator Output Voltage	Output "T" leads or bus bars, also main circuit breaker "line" side.	System voltage - volts AC See generator nameplate and connection diagram.
Regulator Output (Exciter Stator Input)	Fl and F2 terminals at the regulator.	200 volts D.C. range. Fl is plus (+), F2 if minus (—
Regulator Sensing	El, E2, E3 terminals at the Voltage the regulator.	Usually the same as the system voltage (generator output volts). However, in some cases, sensing taken from winding center taps or instrument potential transformers. Maximum 600 volts AC **Example:** Center tap of 480-volt system would give 240 volts El, E2, or E3. **Example:** A 4160-volt system must use a transformer to step voltage down below 600 volts. See the connection diagram supplied with generator set.
Regulator Input Volts (PMG Output Volts)	"PMG" leads at the regulator or capacitor.	200-240 VAC 300 Hz @ 1800 rpm 180-220 VAC 250 Hz @ 1500 rpm

CURRENT (AMP) MEASUREMENTS

Current measurement (AC) can be easily taken with a clamp on type meter.
NOTE: Most clamp type ammeters will not measure D.C.

When measuring generator output current, be sure the clamp is around all cables for each phase. If the physical size of the conductors or the capacity of the meters will not permit all cables to be measured at once, Each one can be measured individually. Add the individual readings together to get the total. Compare readings to the generator nameplate (nameplate ratings are always given per phase).

Amperage should never exceed the nameplate rating when running the intended load. (Amperage may go above nameplate momentarily when starting large motors.) When measuring exciter field amps (Fl and F2 leads) a D.C. meter is required. The maximum field current under full regulator forcing is 6.5 amps D.C.

MEASURING RESISTANCE

The generator windings can be measured and compared to the values shown in the service specifications.

Main Stator

The main stator winding resistance is very low. A meter capable of readings in the milliohm range would be required. However, a standard V.O.M. can be used to check for continuity, shorts, or grounds.

Example: With leads disconnected, a measurement from T1 to T4 should be very low (continuity most V.O.M's). Measured from T1 orT4 to any other lead should be infinite. Measure from the 'T' lead the generator frame to check for grounds (reading should be infinite).

Normal full load reading is approximately 3 amps.

The exciter stator resistance is measured by disconnecting the Fl and F2 leads at the regulator. Measure the resistance between the leads (this value is 22-24 ohms on standard generators). Measure from the leads to the frame to check for grounds.

Note markings and disconnect the main rotor leads (Fl leads and F2 leads) from the rectifier assembly. Measure the resistance of the main rotor winding. Compare reading to value shown in service specification section 12. Measure from the leads to the exciter-mounting bolt to check for grounds.

Exciter Rotor

Disconnect the exciter rotor leads at the diodes (leave leads disconnected if proceeding to check diodes). Measure resistance between phases. Compare value to service specification section 12. Measure from the leads to the exciter-mounting bolt to check for grounds.

TESTING DIODES (RECTIFIERS)

Diodes perform the function of an "electrical check valve". They conduct in one direction only and are used to "rectify" ac current into dc current. To test, measure the resistance first in one direction and then reverse the leads and test in the other direction. The reading should be high in the reverse direction and low in the forward direction. A shorted diode will read low in both directions. An open diode will read high in both directions.

NOTES:
1. Two different polarities of diodes are used. The only difference is in the way the device is mechanically placed in the case. When changing diode, be sure the correct polarity is used.
Refer to section 6 figure 6-34.

2. Some meters do not have enough voltage output from their internal batteries to turn the diode on (about 0.6 volts is required), and the voltage can change with different

range settings. Consult the instruction manual for your meter.
3. Polarities supplied by the meters internal battery may or may not correspond to the (+) (—) markings on the meter.

INSULATION RESISTANCE - *GENERAL*

Insulation resistance is a measurement of the integrity of the insulating materials that separate the electrical windings from the generators steel core. This resistance can degrade over time or due to contaminants (dust, dirt, oil, grease, and especially moisture). Most winding failures are due to a breakdown in the insulation system. In many cases, low insulation resistance is caused by moisture collected when the generator is shut down. The problem can be corrected simply by drying out the windings. Section 5.

Normally the resistance of the insulation system is on the order of millions of ohms. It is measured with a device called a “megger” which is a megohm meter (Meg is for million) and a power supply. The power supply voltage varies, but the most common is 500 volts. A megger voltage over 500 is not recommended except for measuring medium voltage (2400/4160) stators only.

CAUTION: First disconnect any electronic components, regulators, diodes, surge protectors, protective relays, etc., will be destroyed if subjected to the high megger voltages.

To measure insulation resistance, connect the red or positive megger lead to the leads for the winding to be tested, connect the back or negative megger lead to the generator frame. Be sure the leads of the part being tested are not touching any metal parts of the generator. (If the neutral is grounded, it must be disconnected.) Take megger reading (refer to the manual for the megger).

INSULATION RESISTANCE - MAIN STATOR

CAUTION: Be sure the regulator, and any other electronic components, metering, protective relays, etc., are disconnected before meggering. High megger voltages will destroy these parts. All stator leads must be isolated from ground and connected together (on most systems with grounded neutrals - the neutral can be isolated from ground and used as a test point). Connect the positive megger lead to the main stator leads. Connect the negative megger lead to the generator grounding stud. Take the megohm reading (refer to instructions for the megger).

GENERATOR TESTING

The minimum acceptable value can be calculated using the following formula.
Minimum Insulation Resistance = Gen. Voltage + 1 (Megohms) / 1000
Example:
For a 480 volt generator
480 + 1 = 1.48 Megohms
If the reading is below the recommended value, the winding must be dried out or repaired.

INSULATION RESISTANCE - MAIN ROTOR

Disconnect the main rotor leads from the diode bridge on the exciter rotor. Connect the leads together with the positive megger lead. Connect the negative megger lead to a good ground on the rotor assembly such as the exciter mounting bolt. Take the megohm

reading (refer to instructions for the megger).
The minimum acceptable value is 1.5 megohms.

If the reading is low, the winding must be dried out or repaired.

INSULATION RESISTANCE - EXCITER STATOR

Disconnect the exciter leads Fl and F2 from the regulator. Never subject the regulator to a megger. Connect Fl and F2 together with the positive megger lead. Connect the negative megger lead to the ground stud. Take the megohm reading (refer to instructions for the megger).

The minimum value is 1.5 megohms.

If the reading is low, the winding must be dried out or repaired.

INSULATION RESISTANCE - EXCITER ROTOR

Disconnect the exciter rotor windings (6 leads from the diodes). Connect all leads together with the positive megger lead. Connect he negative megger lead to a good ground on the rotor assembly such as the mounting bolt. Take the megohm reading (refer to the instructions for the megger).

The minimum acceptable value is 1.5 megohms.

If the reading is low, the winding must be dried out or repaired.

MAIN ROTOR FIELD AC IMPEDANCE TEST

THEORY: The main rotor resistance can be measured with a very accurate meter that is able to measure low (1 ohm) resistance but it is difficult to determine if there are turn to turn shorts in the field pole windings. One shorted turn would only change a resistance reading on the order of one half of one percent.

The ac impedance test measures the impedance (inductance and resistance) of the field pole coils. Shorted turns in the field pole windings change the coil inductance to a much greater degree than the resistance.

PROCEDURE:

Step 1: The rotor must be supported on a non-magnetic surface such as a wooden skid. Do not use a steel table that would create a magnetic “short circuit” between the poles.

Step 2: Apply 120 volts ac to disconnected main rotor leads Fl and F2.

Step 3: Measure and record voltages pole. Between points “A” and “C”, “C” and “D”, “D” and “E” across each “B”, “B” and (Figure 8-1).

Step 4: The voltage readings should balance within one volt.

RESULTS: If the ac voltages are not balanced (30v ± lv ac with 120v ac input) across each pole, the winding has shorted turns and should be rewound.

Refer to Katolight for further information.

MAGNAMAX EXPLODED VIEW

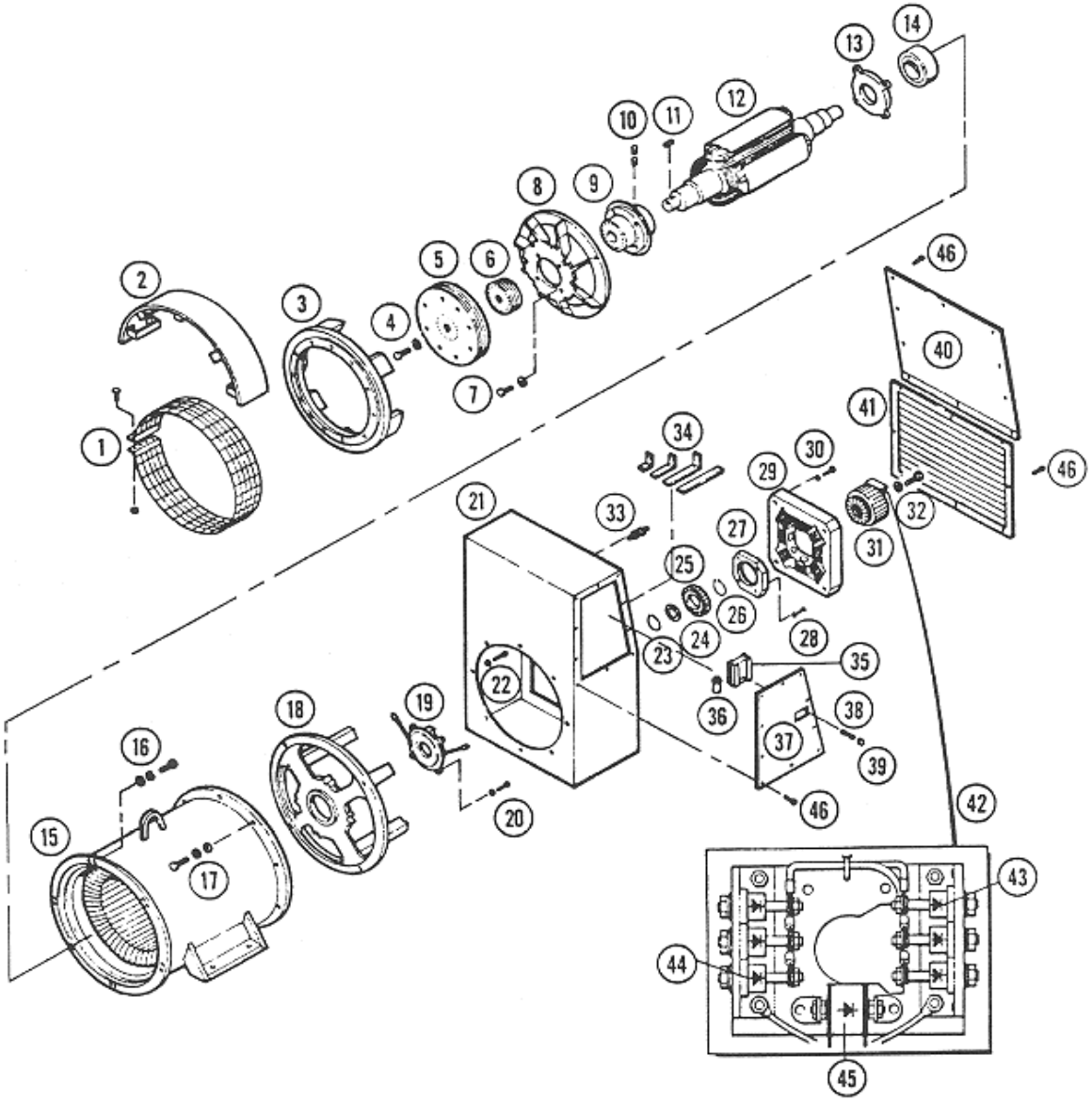

TABLE 9-1 PARTS LIST

NOTE: The parts in this list are subject to change, model number and serial number must accompany any parts order or inquiry.

Item	Part Description	430 Frame Series		570 Frame Series		740 Frame Series	
		Part Number	Qty.	Part Number	Qty.	Part Number	Qty.
1	Screen Assembly						
	Screen	B-525565-1	1	B-525565-2 A-	1	B-525565-3	1
	Screen Mounting Bolt Screen	A-9646-200	2	9646-200 A-	2	A-9646-200	2
	Mounting Nut	A-7551-18	2	7551-18	2	A-7551-18	2
2	Drip Cover assembly	B-525566-1	1	B-525566-2	2	B-525566-3	1
3	Adapter						
	#3Adapter	B-525512A	1				
	#2Adapter	B-525512B	1				
	#1 Adapter	B-525513A	1	B-525618A	1		
	#1/2 Adapter	B-525514B	1	B-525616A	1		
	#0Adapter	B-525514A	1	B-525603A	1	B-525720A	1
	#00 Adapter (#18 Disc)			B-525617A	1	B-525721A	1
	#00 Adapter (#21 Disc)			B-526228A	1	B-52572 1A	1
4	Disc Mounting Fasteners						
	Cap screw for #11-1/2	A-9674-200	6				
	Cap screw for #14	A-9674-150	6	A-9674-150	9		
	Cap screw for #18	A-9674-150	6	A-9674-150	9	A-9674-200	18
	Cap screw for #21					A-9674-150	18
	Cap screw for Delco	A-9674-150	6	A-9674-150	9	A-9674-200	18
	Hardened Washer	A-9667-1	6	A-9667-1	9	A-9667-1	18
5	Drive Discs						
	#11-1/2 Disc	A-525506	5	—	—	—	—
	#14 Disc	A-525508	5	A-525508	5	—	—
	#18 Disc	B-525975	4	A-525579	5	A-525579	10
	#21 Disc	—	—			A-525580	10
	Delco Disc (17.75” 0.0.)	A-525507	5	A-525507	5	A-525507	10
6	Spacers						
	For #11-1/2 Disc	A-525567	14	—	—	—	—
	For #14 Disc	A-525567	5	A-525503	6	—	—
	For#18 Disc	—	—	—	—	A-525503	10
	For #21 Disc	—	—	—	—	—	—
	For Delco Disc	—	—	A-525503	1	A-525503	12
7	Fan Mounting Fasteners						
	Cap screw	A-9626-150	4	A-9626-150	8	A-9626-1 50	8
	Cap screw (2 Brg. Only)	A-9626-150	4	A-9626-200	8	A-9626-200	8
	Belleville Washer	A-9682-1	4	A-9682-1	8	A-9682-1	8
8	Fan	B-525510A	1	B-525604A	1	B-525719A	1
9	Hub						
	Drive Hub [Sgl Brg. Only)	B-525509A	1	B-525606A	1	B-525726A	1
	Fan Hub (2 Brg. Only)	A-525568A	1	B-525694A	1	B-525750A	1
10	Drive Hub Set Screws		—	A-9675-50	2	A-9675-50	2

TABLE 9-1 PARTS LIST
NOTE: The parts in this list are subject to change, model number and serial number must accompany any parts order or inquiry.

Item	Part Description	430 Frame Series		570 Frame Series		740 Frame Series	
		Part Number	Qty.	Part Number	Qty.	Part Number	Qty.
11	Drive Hub Key	A-25658-30	1	A-25658-30	1	A-25658-46	1
12	Main Rotor Assembly with Windings	REFER TO FACTORY					
13	Front Bearing Cap	B-525519A	1	B-525613A	1	B-525743A	1
14	Front Ball Bearing	A-7812R-70	1	A-7812R-80	1	A-7812R-1 10	1
15	Main Body Assembly	REFER TO FACTORY					
16	Adapter Mounting Fasteners	-					
	Cap screw	A-9680-125	12	A-9680-125	16	A-9626-1 50	16
	Lock Washer	A-7653-3	12	A-7653-3	16	A-7653-4	16
	Flat Washer	A-7656-8	16	A-7656-8	16	A-9667-1	16
17	Bracket Mounting Fasteners	-		-	-	-	-
	Cap screw	A-9680-1 25	8	A-9680-1 25	8	A-9626-150	8
	Lock Washer	A-7653-3	8	A-7653-3	8	A-7653-4	8
	Flat Washer	A-7656-8	8	A-7656-8	8	A-9667-1	8
18	Front Bracket	B-525518A	1	B-525605A	1	B-525739A	1
19	PMG Bearing Cap	B-525520A	1	B-525612A	1	B-525742A	1
20	Bearing Cap Fasteners	-	-	-	-	-	-
	Cap screw	A-9680-350	4	A-9680-400	4	A-9680-450	4
	Lock Washer	A-7653-3	4	A-7653-3	4	A-7653-3	4
21	Conduit Box	D-525673	1	D-525680	1	D-525771	1
22	Conduit Box Mtg. Fasteners						
	Cap screw	A-9680-75	8	A-9680-75	8	A-9626-75	8
	Lock Washer	A-7675-2	8	A-7675-2	8	A-7675-4	8
23	Snap Ring - Inner	A-7610-275	1			—	—
24	Loading Spring	A-7661-45	1	A-7661-45	1	A-7661-45	1
25	PMG Rotor	A-525529	1	A-525529	1	A-525529	1
26	Snap Ring-Outer	A-7610-275	1	A-7610-275	1	A-7610-275	1
27	PMG Stator	A-525548-1	1	A-525548-1	1	A-525548-1	1
28	PMG Stator Mtg. Fasteners						
	Cap screw	A-9812-200	4	A-9812-200	4	A-9812-200	4
	Belleville Washer	A-9682-2	4	A-9682-2	4	A-9682-2	4
29	Exciter Stator	A-400N-200A	I	A-400N-300A	I	See Table 9-2	1
30	Exciter Stator Fasteners	-	-	-	-	-	-
	Cap Screw	A-9626-300	4	A-9626-400	4	See Table 9-2	4
	Belleville Washer	A-9682-1	4	A-9682-1	4	A-9682-1	4
31	Exciter Rotor Assy. (IncI. 42)	-	-	-	-	See Table 9-2	
	430 Frame - All	B-525524-2	I	—	—		
	570 Frame - Low Voltage	—	—	B-525524-3	1		
	570 Frame - Med. Voltage	—	—	B-525524-10	1		
32	Exciter Rotor Fastener	-	-	-	-	-	-
	Cap screw	A-9670A-200	1	A-9670A-200	1	A-9670A-200	1
	Belleville Washer	A-9682-1	1	A-9682-1	1	A-9682-1	1

TABLE 9-1 PARTS LIST
NOTE: The parts in this list are subject to change, model number and serial number must accompany any parts order or inquiry.

Item	Part Description	430 Frame Series		570 Frame Series		740 Frame Series	
		Part Number	Qty.	Part Number	Qty.	Part Number	Qty.
33	Grounding Stud Assembly	-	-	-	-	-	-
	Stud	A-26937-300	1	A-26937-300	1	A-525574-400	I
	Washer	A-9787-1	2	A-9787-1	2	A-9787-3	2
	Nut	A-9786-1	1	A-9786-1	2	A-9786-3	2
34	Bus Bar Assembly	REFER TO FACTORY					
35	Voltage Regulator						
	PM100A	C-512481	1	C-512481	1	C-512481	1
	PM200A(optional)	C-512482	1	C-512482	1	C-512482	1
36	Capacitor	A-525582-1	1	A-525582-1	1	A-525582-1	1
37	Side Panels Blank	B-525679A	1	B-525686A	1	B-525707A	1
	Machined for AVR	B-525679B	I	B-525686B	1	B-525707B	1
38	Fuse	A-525698-1	1	A-525698-1	1	A-525698-1	1
39	Fuse Holder Cap	A-525893	1	A-525893	1	A-525893	1
40	Solid Cover	B-525676	1	B-525687	1	B-525706	1
41	Louvered Cover	C-525562	1	C-525647	1	C-525670	1
42	Exciter Rectifier Assy. (Includes 43,44,45)	B-525528A	1	B-525528A	1	B-525528B	1
43	Diode Standard Polarity	B-525570-1	3	B-525570-1	3	B-525570-2	3
44	Diode Reverse Polarity	B-525571-1	3	B-525571-1	3	B525571-2	3
45	Surge Suppressor	B-526482-1	1	B-526482-1	1	B-526482-2	1
46	Cover Mtg. Screws	A-9646-75	33	A-9646-75	33	A-9646-75	33

TABLE 9-2 : EXCITER ASSEMBLIES

Frame	Type	Insulation	Exciter Stator	Exciter Stator Mtg. Cap screws	Exciter Rotor
572	RSL	Standard	A-400N-2504	A-9626-350	B-526483-24
573.574	RSL	Standard	A-400N-300A	A-9626-400	B-526483-3
572	RSL	VPI	A-400N-250AA	A-9626-350	B-526483-25
573.574	RSL	VPI	A-400N-300AA	A-9626-400	B-526483-9
573,574	FSM	VPI	A-400N-300AA	A-9626-400	B-526483-10
741, 742	RSL	Standard	A-400N-500A	A-9626-600	B-526483-5
741, 742, 743	RSL	VPI	A-400N-500A	A-9626-600	B-526483-11
741, 742	FSM	VPI	A-400N-500A	A-9626-600	B-526483-11
743	FSM	VPI	A-400N-600A	A-9626-700	B-526483-12
744	RSL	VPI	A-400N-600A	A-9626-700	B-526483-12
744	FSL	VPI	A-400N-650A	A-9626-750	B-526483-13

STANDARD TOOLS

The MagnaMAX generator is assembled with American standard SAE hardware.

All fasteners should be properly torqued. (See section 12). Torque wrenches ranging from 25 in-lb. through 200 ft-lb. should be available.

Electrical test equipment should include a voltmeter or multimeter (VOM), clamp on ammeter, accurate frequency meter or tachometer, and a megohmmeter. See section Generator Testing for more information.

SPECIAL TOOLS

In addition to the standard tools mentioned above, the following special tools would facilitate removal and installation of large and/or special parts. These tools can be obtained from the Katolight parts department.

Exciter stator lifting fixture (Figure 10-1).



Figure 10-1

In cases where the exciter stator is to be serviced without removing the generator conduit box this fixture can be used with overhead rigging to remove and reinstall the exciter stator.

Exciter rotor puller bolt (Figure 10-2). The exciter rotor has a built in pulling system. With the use of this bolt, the rotor can be easily removed from the shaft without damage to the winding.



Figure 10-2

The PMG rotor is installed to the generator shaft with a snap ring.

The nominal shaft diameter is 2-3/4 inches and the ring must be spread approximately 3/4 inches for removal. To install the snap ring, use a piece of pipe with a 2-3/4 inch I.D. (Figure 10-4). Push the PMG rotor and snap ring onto the shaft until the ring snaps into the groove.



Figure 10-4

Rotor lifting fixture (Figure 10-5). The main generator rotor is heavy (approximately 1/2 the weight of the generator) and difficult to handle. The proper fixture should be used whenever removing or installing the main

rotor into the main stator. Without proper care and equipment, the windings can be easily damaged.



Figure 10-5

MISCELLANEOUS

A selection of wiring devices such as electric connectors, tape, cable ties, crimping and stripping tools, etc., should also be a part of the generator service tool kit. The standard regulator uses flat 1/4 inch female insulated terminals for AWG #14 wire.

PREPARATION FOR SHIPMENT OR EXTENDED STORAGE

SHIPPING INSTRUCTIONS

Shipping and handling will be much easier if the generator is fastened to a suitable shipping skid that will allow handling by a forklift. The skid should extend beyond the generator in all directions. If the original skid is available it should be used. Katolight will supply shipping skid drawings upon request.
Overseas shipping may require special export crating. Check with your freight carrier.

When installed, single bearing generator rotors are supported on the drive end by the drive discs bolted to the engine flywheel. When the engine is removed, the rotor must be supported by an appropriate fixture to prevent main rotor, main stator or exciter damage (Figure 11-1). Before shipping any single bearing generator, the main rotor must be supported by the adapter using an appropriate fixture.

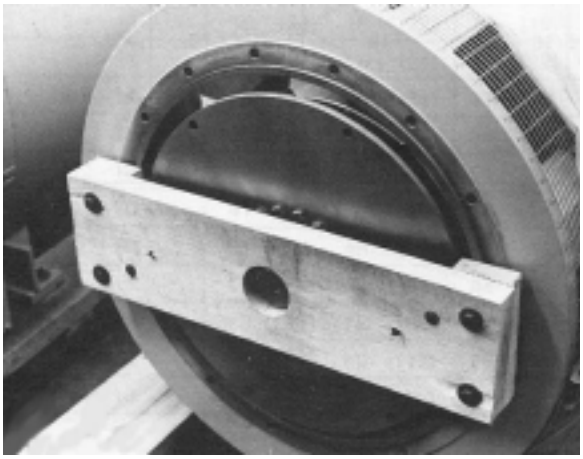

Figure 11-1

STORAGE INSTRUCTIONS

If the generator is placed in storage, the following precautions should be taken to protect it:

A. Equipment must be kept clean.

1. Store indoors.

2. Keep covered to eliminate airborne dust and dirt.

3. Cover openings for ventilation, conduit connections, etc. to prevent entry of rodents, snakes, birds, and insects, etc.

B. Equipment must be kept dry.

1. Store in a dry area indoor.

2. Temperature swings should be minimal to prevent condensation.

3. If stored in an unheated or damp building, space heaters will be required to prevent internal condensation.

4. Treat unpainted flanges, shafts, drive discs, and fittings with a rust inhibitor.

5. Check insulation resistance of all windings before starting the generator. If readings are low, the windings must be dried.

C. Keep bearings lubricated.

1. Every six months rotate shaft several turns to distribute grease in bearings.

2. If unit has been stored more than one year, add grease before start-up.

D. Review and follow instructions in Sections 3 and 4 before putting the gen-set into service.

CAUTION
DO NOT ATTEMPT TO TRANSPORT ANYGENERATOR WITHOUT PROPER ROTOR SUPPORT, EXTENSIVE EQUIPMENTDAMAGE CAN OCCUR.

TABLE 12-1: MAGNA MAX - FASTENER AND TORQUE SPECIFICATIONS

Part Description	Fastener Spec.	430-570 Frames		740 Frames	
		Size Dia.-Thread	Torque Ft-Lb.	Size Dia.-Thread	Torque Ft-Lb.
Front Bracket	Grade 5 cap screws with flat and lock washers	3/8 - 16	25	1/2 - 13	60
Bearing Caps	Grade 5 cap screws with lock washers	3/8 - 16	25	3/8 - 16	25
Drive Disc	Grade 8 cap screws with hardened washers	5/8 - 18	192	5/8 - 18	192
Adapter (or rear bracket)	Grade 5 cap screws with flat and lock washers	3/8 - 16	25	1/2-13	60
Conduit Box	Grade 5 cap screw with star type lock washer	3/8 - 16	25	1/2-13	60
PMG Stator	Grade 5 cap screws with Belleville washers	1/2-13	4	1/2-13	4
Exciter Stator	Grade 5 cap screws with Belleville washers	1/2-13	60	1/2-13	60
Exciter Armature (rotor)	Grade 8 cap screw with Belleville washer	1/2-13	84	1/2-13	84
Cooling Fan	Grade 5 cap screws with Belleville washers	1/2-13	60	1/2-13	60
Main Rotor Coil Supports	Grade 8 cap screws with Belleville washers	5/16-18	19	3/8 - 16	35
Rectifier Assembly Mounting	Grade 5 cap screws	1/4-20	4	1/4-20	4
Drive Hub Set Screw	Socket head set screw 1/4 in. hex key	1/2-13	50	1/2-13	50

NOTES: For table 12-1
All fasteners are SAE (American) standard.
All torque values are for plated hardware that is standard on the MagnaMAX.
If hardware is replaced with non-plated, refer to Table 12-2.
Always use quality hardware of the grade specified.
Main Rotor Coil Supports 570 and 740 frame only. Not used on 430 frames.

TABLE 12-2: CAPSCREW TORQUE VALUES

NOTES: Cap screws threaded into aluminum may require reductions in torque of 3O% or more.

	Cap screw Diameter and Ultimate Tensile Strength (PSI)								
	To 1/2 - 69,000 PSI To 3/4 - 64,000 PSI To 1 - 55,000 PSI			To 3/4 - 120,000 PSI To 1 - 115,000 PSI			150,000 PSI		
SAE Grade	1 OR 2			5			8		
Size (Inches) - (Thread)	Torque Ft-LB (N-M)			Torque Ft-Lb. (N-M)			Torque Ft-LB (N-M)		
	Dry	Oiled	Plated	Dry	Oiled	Plated	Dry	Oiled	Plated
1/4-20	5(7)	4.5 (6)	4(5)	8 (11)	7 (9)	6 (8)	12 (16)	11 (15)	10 (14)
1/4-28	6(8)	5.4 (7)	4.8 (6)	10 (14)	9 (12)	8 (11)	14 (19)	13 (18)	11 (15)
5/16-18	11 (15)	10 (14)	9 (12)	17 (23)	15 (20)	14 (19)	24 (33)	22 (30)	19 (26)
5/16-24	13 (18)	12 (16)	10 (14)	19 (26)	17 (23)	15 (20)	27 (37)	24 (33)	22 (30)
3/8-16	18 (24)	16 (22)	14 (19)	31 (42)	28 (38)	25 (34)	44 (60)	40 (54)	35 (47)
3/8- 24	20 (27)	18 (24)	16 (22)	35 (47)	32 (43)	28 (38)	49 (66)	44 (60)	39 (53)
7/16 - 14	28 (38)	25 (34)	22 (30)	49 (66)	44 (60)	39 (53)	70 (95)	63 (85)	56 (76)
7/16-20	30 (41)	27 (37)	24 (33)	55 (75)	50 (68)	44 (60)	78 (106)	70 (95)	62 (84)
1/2-13	39 (53)	35 (47)	31 (42)	75 (102)	68 (92)	60 (81)	105 (142)	95 (129)	84 (114)
1/2-20	41 (56)	37 (50)	33 (45)	85 (115)	77 (104)	68 (92)	120 (163)	108 (146)	96 (130)
9/16-12	51 (69)	46 (62)	41 (56)	110 (149)	99(134)	88(119)	155 (210)	140 (190)	124 (168)
9/16-18	55 (75)	50 (68)	44 (60)	120 (163)	108 (146)	96 (130)	170 (230)	153 (207)	136 (184)
5/8-11	83 (113)	75 (102)	66 (89)	150 (203)	135 (183)	120 (163)	210 (285)	189 (256)	168 (228)
5/8-18	95 (129)	86 (117)	76 (103)	170 (230)	153 (207)	136 (184)	240 (325)	216 (293)	192 (260)
3/4-10	105 (142)	95 (130)	84 (114)	270 (366)	243 (329)	216 (293)	375 (508)	338 (458)	300 (407)
3/4-16	115 (156)	104 (141)	92 (125)	295 (400)	266 (361)	236 (320)	420 (569)	378 (513)	336 (456)
7/8-9	160 (217)	144 (195)	128 (174)	395 (535)	356 (483)	316 (428)	605 (820)	545 (739)	484 (656)
1-14	175 (237)	158 (214)	140 (190)	435 (590)	392 (531)	348 (472)	675 (915)	608 (824)	540 (732)
1 -8	235 (319)	212 (287)	188 (255)	590 (800)	531 (720)	472 (640)	910 (1234)	819 (1110)	728 (987)
1- 14	250 (339)	225 (305)	200 (271)	660 (895)	594 (805)	528 (716)	990 (1342)	891 (1208)	792 (1074)

TABLE 12-3:EXCITATION DATA -60 HZ - 1800 RPM

Model Number Low Volts	Exciter Field Resistance-Ohms @25°C	Exciter Field Volts Fl and F2 at regulator No Load 240/480 Volts	No Load Output Voltage With Fixed Excitation High Wye Connection®	
			12V DC	24V DC
431RSL2004	22.5	10.4	500	595
431RSL2006	22.5	9.5	520	610
431RSL2008	22.5	10.4	500	595
432RSL2010	22.5	10.8	495	590
432RSL2012	22.5	13.5	460	550
432RSL2014	22.5	11.3	490	575
432RSL2016	22.5	15.3	440	530
432RSL2018	22.5	14.1	450	545
433RSL2023	22.5	16.9	425	520
433RSL2027	22.5	13.7	445	545
571RSL2020	23.0	8.1	540	640
571RSL2024	23.0	9.9	500	600
571RSL2028	23.0	10.6	500	590
572RSL2032	23.0	10.8	490	580
572RSL2037	23.0	12.0	480	560
572RSL2040	23.0	10.6	500	580
572RSL2045	23.0	12.7	470	560
573RSL2048	23.0	12.4	470	560
573RSL2052	23.0	13.3	465	550
573RSL2056	23.0	14.0	450	540
741RSL2060	22.5	10.8	500	600
741RSL2064	22.5	12.2	480	570
741RSL2068	22.5	12.8	465	575
741RSL2072	22.5	11.9	480	580
742RSL2076	22.7	13.0	460	570
744RSL2284	22.0	15.0	430	570
744RSL2288	22.0	16.0	410	540
Model Number Medium Volts	**Exciter Field Resistance-Ohms @25°C**	**Exciter Field Volts Fl and F2 at Regulator No Load 4160 Volts**	**No Load Output Voltage With Fixed Excitation Wye Connection**	
			12V DC	24V DC
573FSM2328	23.0	16.3	3600	4700
573FSM2336	23.0	17.2	3500	4600
574FSM2340	23.0	14.9	3700	4800
574FSM2348	23.0	18.7	3400	4500
574FSM2352	23.0	17.5	3500	4600
741FSM2360	22.7	12.9	4000	5100
741FSM2364	22.7	12.9	4000	5100
741FSM2368	22.7	13.2	3900	5100
742FSM2372	22.7	15.9	3600	4700
742FSM2376	22.7	16.6	3600	4700
742FSM2380	22.7	16.8	3500	4600
743FSM2384	22.0	17.6	3300	4600
743FSM2388	22.0	16.9	3500	4600

For rated load exciter field volts - see generator nameplate.
For low wye connection: divide value shown in table by 2.
For high delta connection: divide value shown in table by 1 .732.
For delta connection: divide value shown in table by 1 .732.

TABLE 12-3:EXCITATION DATA -50 HZ - 1500 RPM

Model Number Low Volts	Exciter Field Resistance-Ohms @25°C	Exciter Field Volts Fl and F2 at regulator No Load 240/480 Volts	No Load Output Voltage With Fixed Excitation High Wye Connection	
			12V DC	24V DC
431RSL2004	22.5	12.2	415	495
431RSL2006	22.5	10.4	430	510
431RSL2008	22.5	12.4	410	490
432RSL2010	22.5	12.6	410	490
432RSL2012	22.5	15.8	380	455
432RSL2014	22.5	13.1	400	480
432RSL2016	22.5	18.5	360	440
432RSL2018	22.5	16.9	370	450
433RSL2023	22.5	20.7	335	430
433RSL2027	22.5	16.7	360	445
571RSL2020	23.0	9.2	440	530
571RSL2024	23.0	11.5	420	500
571RSL2028	23.0	12.0	410	490
572RSL2032	23.0	12.4	400	480
572RSL2037	23.0	13.8	390	470
572RSL2040	23.0	12.7	400	480
572RSL2045	23.0	15.0	380	460
573RSL2048	23.0	14.3	390	470
573RSL2052	23.0	15.4	380	455
573RSL2056	23.0	17.0	370	450
741RSL2060	22.5	12.4	405	500
741RSL2064	22.5	13.7	390	480
741RSL2068	22.5	14.6	380	470
741RSL2072	22.5	14.0	390	480
742RSL2076	22.7	14.9	380	470
744RSL2284	22.0	17.2	350	470
744RSL2288	22.0	18.9	340	440
Model Number Medium Volts	**Exciter Field Resistance-Ohms @25°C**	**Exciter Field Volts Fl and F2 at Regulator No Load 3300 Volts**	**No Load Output Voltage With Fixed Excitation Wye Connection**	
			12V DC	24V DC
573FSM2328	23.0	15.0	3000	3900
573FSM2336	23.0	15.4	2900	3800
574FSM2340	23.0	12.8	3200	4000
574FSM2348	23.0	15.4	2900	3800
574FSM2352	23.0	16.1	2800	3800
741FSM2360	22.7	12.0	3300	4300
741FSM2364	22.7	11.8	3300	4300
741FSM2368	22.7	12.5	3300	4200
742FSM2372	22.7	15.2	2900	3800
742FSM2376	22.7	15.0	2900	3800
742FSM2380	22.7	16.1	2700	3800
743FSM2384	22.0	15.4	2900	3900
743FSM2388	22.0	15.4	2900	3800

For rated load exciter field volts - see generator nameplate.
For low wye connection: divide value shown in table by 2.
For high delta connection: divide value shown in table by 1 .732.
For delta connection: divide value shown in table by 1 .732.

TABLE 12-5: RESISTANCE VALUES - MAIN WINDINGS

NOMINAL COLD (25°C) RESISTANCE IN OHMS

Base Model Low Voltage	Winding H-SG-	Main Stator	Main Rotor
431RSL2004	430011	.1160	.139
431RSL2006	430012	.0898	.149
431RSL2008	430013	.0685	.160
432RSL2010	430014	.0534	.170
432RSL2012	430018	.0389	.186
432RSL2014	430015	.0353	.189
432RSL2016	430017	.0245	.225
432RSL2018	430016	.0228	.226
433RSL2023	430042	.0144	.286
433RSL2027	430039	.0137	.297
571RSL2020	570020	.0316	.306
571RSL2024	570021	.0253	.322
571RSL2028	570022	.0214	.328
572RSL2032	570023	.0159	.363
572RSL2037	570024	.0144	.374
572RSL2040	570025	.0109	.402
572RSL2045	270026	.0092	.419
573RSL2048	570027	.0082	.457
573RSL2052	570028	.0068	.490
573RSL2056	570029	.0054	.542
741RSL2060	740021	.0061	.609
741RSL2064	740022	.0046	.647
741RSL2068	740023	.0042	.679
741RSL2072	740024	.0037	.718
742RSL2076	740025	.0032	.750
744RSL2284	740026	.0026	.892
744RSL2288	740027	.0018	1.044
Base Model Medium Voltage	**Winding H-SG-**	**Main Stator**	**Main Rotor**
573FSM2328	570201	1.249	.383
573FSM2336	570202	.837	.424
574FSM2340	570203	.694	.458
574FSM2348	570204	.526	.498
574FSM2352	570205	.410	.553
741FSM2360	740201	.462	.609
741FSM2364	740202	.380	.662
741FSM2368	740203	.297	.694
742FSM2372	740204	.223	.768
742FSM2376	740205	.185	.825
742FSM2380	740206	.151	.888
743FSM2384	740207	.127	.954
743FSM2388	740208	.101	1.053

Main stator values shown are line to line on the high wye connection. For low wye connection divide value shown in table by 4.

TABLE 12-6: RESISTANCE VALUES - EXCITER WINDINGS

NOMINAL COLD (25°C) RESISTANCE IN OHMS

Low Voltage	Exciter Stator (Field)	Exciter Rotor (Armature)	PMG Stator
430 Frames	22.5	0.023	2.0
570 Frames	23.0	0.045	2.0
741 Frames	22.5	0.043	2.0
742 Frames	22.7	0.048	2.0
744 Frames	22.0	0.066	2.0
Medium Voltage	**Exciter Stator (Field)**	**Exciter Rotor (Armature)**	**PMG Stator**
570 Frames	23.0	0.070	2.0
741 Frames	22.7	0.048	2.0
742 Frames	22.7	0.048	2.0
743 Frames	22.0	0.065	2.0

KATOLIGHT CORPORATION

MAGNAMAXDVR® GENERATOR

INSTALLATION OPERATION, AND MAINTENANCE MANUAL

TABLE OF CONTENTS

TABLE OF CONTENTS *2*

SAFETY *6*

GENERAL INFORMATION *7*

MECHANICAL DESIGN **7**

General 7

Conduit Box 7

MagnaMAX^{DVR} Unirotor^{TM} Construction 7

Adapters and Drive Discs 7

ELECTRICAL DESIGN **8**

Temperature Rise 8

Standby Generator Ratings 8

Premium Insulation System 8

Power Factor 8

MagnaMAX^{DVR} Voltage Regulator 8

HOW TO READ A MODEL NUMBER **9**

INSTALLATION *10*

RECEIVING YOUR MAGNAMAX^{DVR} GENERATOR **10**

UNPACKING AND HANDLING **10**

STORAGE **10**

PREPARATION FOR USE **10**

GENERATOR MOUNTING - SINGLE BEARING **11**

GENERATOR MOUNTING-TWO BEARING **11**

BELT DRIVE **11**

ENVIRONMENTAL CONCERNS **11**

ELECTRICAL CONNECTIONS *12*

GENERATOR LEAD CONNECTIONS **12**

12 LEAD HIGH WYE CONNECTION **13**

12 LEAD LOW WYE CONNECTION **13**

12 LEAD HIGH DELTA CONNECTION **14**

12 LEAD LOW DELTA CONNECTION **14**

10 LEAD HIGH WYE CONNECTION **15**

10 LEAD LOW WYE CONNECTION **15**

6 LEAD WYE CONNECTION **16**

6 LEAD DELTA CONNECTION **16**

3 LEAD DELTA CONNECTION **17**

4 LEAD WYE CONNECTION **17**

DOUBLE DELTA -- SINGLE PHASE CONNECTION **18**
LOW ZIG ZAG -- SINGLE PHASE CONNECTION **18**
HIGH ZIG ZAG -- SINGLE PHASE CONNECTION **18**
PARALLELING OPERATIONS ***19***
PRIME MOVER **19**
VOLTAGE REGULATOR **19**
SWITCHGEAR **19**
PARALLELING BASICS **19**
REACTIVE LOAD CONTROL **20**
PARALLELING CIRCUITRY **20**
THYRISTOR OR SCR LOADING ***21***
OPERATION ***21***
PRE-START INSPECTION **21**
STARTING-UP THE GENERATOR **22**
FIELD FLASHING **22**
VOLTAGE ADJUSTMENTS **22**
OTHER ADJUSTMENTS **23**
MAINTENANCE ***23***
GENERAL INFORMATION **23**
AIR INTAKE AND EXHAUST **23**
ELECTRICAL CONNECTIONS, WINDINGS **24**
LUBRICATION **24**
DRYING ELECTRICAL INSULATION **26**
Space Heaters 26
Oven 26
Forced Air 26
"Short Circuit" Method 26
CLEANING METHODS **27**
Solvents 27
Cloth and Compressed Air 27
Brushing and Vacuum Cleaning 27
Shell Blasting 27
Steam Cleaning 27
DISASSEMBLY ***28***
REMOVAL FROM PRIME MOVER **28**
CONDUIT BOX REMOVAL **29**
EXCITER STATOR (FIELD) REMOVAL **30**
EXCITER ARMATURE (ROTOR) REMOVAL **30**

PMG STATOR REMOVAL **31**
MAIN ROTOR REMOVAL **33**
FRONT END BRACKET REMOVAL **35**
EXCITER INSPECTION ***35***
EXCITER STATOR **35**
EXCITER (ROTOR) ARMATURE **36**
PMG INSPECTION ***37***
PMG STATOR **37**
PMG ROTOR **37**
MAIN ROTOR INSPECTION ***37***
BEARING **37**
FAN **38**
MAIN ROTOR CORE AND WINDINGS **40**
DRIVE DISCS (SINGLE BEARING GENERATORS ONLY) **40**
FRONT (EXCITER) END BRACKET INSPECTION ***40***
DRIVE END BRACKET OR SAE ADAPTER INSPECTION ***41***
MAIN STATOR INSPECTION ***42***
FRONT END BRACKET INSTALLATION ***42***
MAIN ROTOR INSTALLATION ***42***
PMG INSTALLATION ***45***
EXCITER INSTALLATION ***46***
CONDUIT BOX INSTALLATION ***47***
ASSEMBLY TO PRIME MOVER ***48***
TROUBLESHOOTING ***50***
INTRODUCTION **50**
SYMPTOM: **51**
NO VOLTAGE OR RESIDUAL VOLTAGE 51
LOW VOLTAGE - 52
NO LOAD 52
LOW VOLTAGE WHEN LOAD IS APPLIED 53
HIGH VOLTAGE 53
VOLTAGE IS FLUCTUATING 54
OPERATES SATISFACTORILY WHEN COLD, BUT SHUTS DOWN WHEN WARM 54
BUILDS VOLTAGE FROM STARTUP,THEN GOES TO LOW (RESIDUAL) VOLTAGE 54
EQUIPMENT RUNS NORMALLY ON UTILITY POWER, BUT WILL NOT RUN ON GENERATOR SET 54
GENERATOR TESTING ***55***
VISUAL INSPECTION **55**

CONSTANT EXCITATION (12V BATTERY) TEST **55**
MEASURING VOLTAGES **56**
Generator Output Voltage 57
Regulator Output (Exciter Stator Input) 57
Regulator Sensing 57
Regulator Input Volts (PMG Output Volts) 57
CURRENT (AMP) MEASUREMENTS **57**
MEASURING RESISTANCE **58**
Main Stator 58
Exciter Rotor 58
TESTING DIODES (RECTIFIERS) **58**
INSULATION RESISTANCE - MAIN STATOR **59**
GENERATOR TESTING **59**
INSULATION RESISTANCE - MAIN ROTOR **59**
INSULATION RESISTANCE - EXCITER STATOR **60**
INSULATION RESISTANCE - EXCITER ROTOR **60**
MAIN ROTOR FIELD AC IMPEDANCE TEST **60**
MAGNAMAX EXPLODED VIEW **61**
STANDARD TOOLS ***65***
SPECIAL TOOLS **65**
MISCELLANEOUS **66**
PREPARATION FOR SHIPMENT OR EXTENDED STORAGE ***66***
SHIPPING INSTRUCTIONS **66**
STORAGE INSTRUCTIONS **66**
TABLE 12-1: MAGNA MAX - FASTENER AND TORQUE SPECIFICATIONS ***68***
TABLE 12-2: CAPSCREW TORQUE VALUES ***69***
TABLE 12-3:EXCITATION DATA -60 HZ - 1800 RPM ***70***
TABLE 12-4:EXCITATION DATA -50 HZ - 1500 RPM ***71***
TABLE 12-5: RESISTANCE VALUES - MAIN WINDINGS ***72***
TABLE 12-6: RESISTANCE VALUES - EXCITER WINDINGS ***73***

SAFETY

PLEASE REMEMBER SAFETY FIRST. If you are not sure of the instructions or procedures, seek qualified help before continuing.

This service manual emphasizes the safety precautions necessary during the installation, operation, and maintenance of your generator.

Each section has caution and warning messages. These messages are for your safety and the safety of the equipment involved. If any of the cautions or warnings is not readily understood, seek clarification from qualified personnel before proceeding.

Before any service work is done, disconnect all power sources and, where appropriate, lock out all controls, to prevent an unexpected start-up of the generator set. Proper grounding in compliance with local and national electrical codes must be provided. These safety precautions are necessary to prevent potential serious personal injury, or even death.

The hazards associated with lifting or moving the generator are pointed out in the installation and service sections; incorrect lifting or moving can result in personal injury or property damage.

Whenever the generator is running, always assume and proceed as if voltage is present. Residual voltage is present at the generator leads and at the regulator panel connections, even with the regulator fuse removed. Caution must be observed, or serious personal injury or death can result.

Whenever solvents, cleaners, or flammable liquids are present, adequate ventilation must be available to avoid fire, explosion, and health hazards. Always avoid breathing vapors and use suitable personal protective equipment to prevent personal injuries. (Such as eyes, face, and hand protection.)

This manual is not intended to be a substitute for properly trained personnel. Only qualified trained people should attempt repairs. The cautions and warnings point out known conditions that are potentially dangerous. Each installation will create its own set of circumstances. No manual can cover every possible situation.

When in doubt, ask. Don’t be embarrassed to ask, “dumb questions”. Remember that dumb questions are much easier to handle than dumb mistakes.

GENERAL INFORMATION

MECHANICAL DESIGN

General

All single and two bearing units are manufactured with cast iron end brackets and adapters, and fabricated steel frames. Flexible drive discs and SAE adapters are machined to SAE standards. Pre-lubricated, regreasable, shielded ball bearings are used on MagnaMAX^{DVR} generators. Standard units are fully guarded. Drip proof shields are available as an option.

Conduit Box

The large end mounted conduit box is constructed of formed sheet steel that will allow the addition of top mounted control packages. Refer to Katolight for top mounted controls of more than 240 lbs. There is ample room inside the conduit box for a circuit breaker (through 800A Frame) and other options. The conduit box cover properly directs outside ventilating air through the generator.

MagnaMAX^{DVR} Unirotor^{TM} Construction

An aluminum die cast rotor core affords high mechanical integrity and low vibration at operating speeds. Amortisseur winding and coil supports are die cast as an integral part of the rotor. Laminations are 4-pole, one piece laminations which are shrunk fit and keyed to the shaft. No dovetails, cross bolts or other pole to shaft connecting devices are used. The cast unidirectional aluminum alloy ventilation fan provides even air distribution to maximize cooling and generator efficiency.

Adapters and Drive Discs

All single bearing units are available with several adapters and drive disc arrangements. These can be shipped to order or can be changed in the field with standard shop tools. When changing flexible drive discs, spacers are used between the discs and the cast iron hub to maintain SAE standard dimensions.

ELECTRICAL DESIGN

All standard products have 2/3 pitch main windings to eliminate the third harmonic. This serves to lower operating temperatures, give lower harmonic content and better waveform, and extend the overall life of the generator.

Temperature Rise

All ratings and frame sizes are based on NEMA and CSA Class F and Class H temperature rises on both the rotor and stator windings. Ratings for British, German, French, IEC and all popular marine agencies are available.

Standby Generator Ratings

Synchronous generators used on emergency backup power can have temperature rises up to 25°C above those for continuous operation. (NEMA MG1 -22.40 and MG 1-22.84).

Premium Insulation System

All MagnaMAX^{DVR} generators are built with Class H or better insulation materials. All standard generators are suitable for continuous duty at Class F temperature rise and will give equivalent or better winding life expectancy to generators supplied with Class A or B insulation systems operated within their temperature limits. The varnishes and epoxies used are synthetic, non-hygroscopic. Multiple dip and bake cycles of the main winding, plus a final coat of epoxy, make the standard winding moisture and fungus resistant. The MagnaMAX^{DVR} rotor is wet wound with thermo-setting epoxy applied between each layer, plus a final coating of epoxy for moisture and abrasion resistance.

MagnaMAX^{DVR} generators can be ordered with an epoxy vacuum pressure impregnated insulation system as an option. (MagnaMAX^{DVR} generators with form wound coils include VPI as standard.)

Power Factor

All standard generators are designed for operation at rated kVA at 0.8 lagging power factor but can be operated at rated kVA over the 0.8 to 1 .0 power factor range.

MagnaMAX^{DVR} Voltage Regulator

The standard voltage regulator is a fully encapsulated, static types with a solid state build up circuit. Standard features include 3-phase RMS sensing, paralleling, adjustable under frequency protection, and over excitation protection. The regulator meets EMI suppression to Mil Std-461C, part 9. An optional feature is adjustable armature current limiting. See the regulator manual for more information.

HOW TO READ A MODEL NUMBER

It is extremely important to properly identify the machine when requesting parts or service. Always have the generator model number and serial number when requesting information from the factory. We cannot help you without this information.

An Example For MagnaMAX^{DVR} Generators ***431RSL 4009***

Character	Category	Description
1st three characters	Frame Number	
4th character	Winding type	R—Random Wound F—Form Wound
5th character	Bearing arrangement	S—1 Bearing D—2 Bearings
6th character	Voltage range	L—Up to 480 volts M—1000-6600 volts S—600 volts
7th Character	Product style	4-Magna
8th Character	Type	
9th & 10th Character	Wk2 Code	
11th Character	Modification	A-Z assigned sequentially
12th Character	Mounting Arrangement	A-Y see chart figurer 2-1
13th, 14th & 15th characters	Modification numbers	For internal use only

Arrangement	Adapter SAE Size	Drive Disc SAE Size
A	3	11-1/2
B	2	11-1/2
C	4	8
D	3	10
E	1	11-1/2
F	1	14
G	4	7-1/2
H	1	Delco
J	1/2	14
K	2	10
L	1/2	Delco
M	0	14
N	2	Small Delco
0	None	None
P	0	18
S	0	Delco
U	00	18
V	4	6-1/2
W	00	21
Y	4	10

Figure 2-1

INSTALLATION

RECEIVING YOUR MAGNAMAX^{DVR} GENERATOR

Upon receipt of the generator, it is recommended that it be carefully examined for possible damage incurred in shipment. The generator was given to the Freight Company in good condition, and they are responsible for the product from our dock to yours. Any damage should be noted on the freight bill before accepting the shipment. Claims for damages must be promptly filed with the Freight Company.

UNPACKING AND HANDLING

Read all instruction cards carefully. When lifting, attach an overhead crane to the lifting lugs on the generator frame. Apply lifting forces in a vertical direction.

WARNING
THE LIFTING LUGS ON THE GENERATOR ARE DESIGNED TO SUPPORT THE GENERATOR ONLY. DO NOT LIFT COMPLETE GENERATOR SET BY MEANS OF LIFTING DEVICES ON THE GENERATOR. PERSONAL INJURY OR QUIPMENT DAMAGE MAY OCCUR.

STORAGE

In the event that the generator is not to be installed on the prime mover immediately, it is recommended that it be stored in a clean, dry area that is not subject to rapid changes in temperature and humidity. See "STORAGE INSTRUCTIONS" for more information.

PREPARATION FOR USE

Although the generator is carefully inspected and tested in operation before it leaves the factory, it is recommended the unit be thoroughly inspected. The insulation on the wire should be inspected and all bolts should be checked for tightness.

Remove all shipping tapes, bags, blocks, and skids, which are used to prevent vibration and rotor movement during shipment. Dry, low-pressure compressed air of approximately 30 PSI (206 KPA) can be used to blow out the interior of the generator. In the case of two bearing machines, it is possible to turn the rotor by hand to make sure that it rotates smoothly without binding.

If the machine has been in storage for a year or longer it is recommended that it be lubricated according to the lubrication instructions and chart supplied in the maintenance section.
If the machine has been exposed to damp, humid conditions the insulation resistance should be checked. Refer to the instructions supplied in this manual.

GENERATOR MOUNTING - SINGLE BEARING

Single bearing generators are provided with an SAE flywheel adapter and flexible drive discs. Very close tolerances are maintained in the manufacture of the generator so that the alignment procedure is extremely simple. A coupling hub of nodular iron is shrunk on the shaft and special steel drive discs are bolted to the hub. Holes are provided in the periphery of the coupling disc, which correspond to tapped holes in the flywheel. The outside diameter of the discs fits in a rabbet in the flywheel so that concentricity is assured in all cases.

WARNING
DO NOT APPLY ANY FORCE TO THE GENERATOR FAN FOR LIFITNG OR FOR ROTATING THE GENERATOR ROTOR. DISREGARDING THESE INSTRUCTIONS MAY CAUSE PERSONAL INJURY OR EQUIPMENT DAMAGE

CAUTION: GRADE 8 CAPSCREWS OR GRADE 8 PLACE-BOLTS AND HARDENED WASHERS ARE REC-OMMENDED TO MOUNT THE DRIVE DISCS TO THE FLYWHEEL.DO NOT USE HELICAL OR OTHER LOCKING DEVICES UNLESS APPROVED.

The SAE adapter and the flywheel housing are designed to match each other with no further alignment necessary. Shims may be necessary under the feet of the generator to insure a solid mounting. See THE SERVICE SECTION for more information.

GENERATOR MOUNTING-TWO BEARING

Two bearing generators are provided with a shaft extension and key way. For direct-coupled sets the assembler furnishes a flexible coupling which is installed between the driver and the generator shaft.

IMPORTANT: Aligning the two machines as accurately as possible will reduce vibration, increase-bearing life, and insures minimum coupling wear. It may be necessary to shim the generator feet for proper support and alignment. Consult the coupling manufacturer's instructions for alignment specifications and procedures.

BELT DRIVE

Please refer to Katolight for applications involving belt driven installations.

ENVIRONMENTAL CONCERNS

Dirt, moisture, heat, and vibration are enemies of electrical equipment. The ambient temperature should not exceed the value shown on the generator nameplate. Generators for outdoor application should be protected from the elements by housings with proper openings for ventilation. This protection should be designed to prevent the direct contact of wind driven rain, snow, or dust with the generator. In moist or humid areas, such as the Tropics and marine serv-ice, additional protection is recommended. Although the standard windings are humidity and moisture resistant, special insulation and accessories such as space heaters can increase generator life. In extremely dirty and dusty environments a means of providing filtered cooling air to the generator is recommended. Please refer to Katolight for filter kits that are available.

ELECTRICAL CONNECTIONS

The generator conduit box construction allows conduit to enter the top, bottom, or either side of the box. A hole-saw or any suitable tool can be used to provide for the conduit entrance. Protect the interior of the generator from shavings when drilling or sawing. An approved connector must be used in conjunction with the conduit.

To minimize the transmission of vibration, it is essential that flexible conduit be used for all electrical cable entrance to the generator.

Refer to the connection diagram supplied with the generator and / or the proper diagrams shown in this section. Install all intercomponent and external wiring in accordance with the regulations of the national and local electrical codes. Clean all contact surfaces to assure good electrical bonding with the generator lugs or bus bars. Use heavy-duty terminal lugs or good quality clamps for making all connections. Insulate all connections in accordance with national and local regulations.

Be sure the generator frame is grounded to all the other components of the system with a ground wire in accordance with national and local regulations.

GENERATOR LEAD CONNECTIONS

The electrical connections in the conduit box should be made in accordance with the appropriate “connection diagram.” Use the diagram appropriate for the number of leads and voltage range required. Refer to the drawings supplied with the generator and to drawings in this section.

The final voltage setting is established within the selected range by an adjustment of the voltage regulator.

CAUTION: SOME GENERATORS HAVE MULTIPLE, IDENTICALLY MARKED, CABLES FOR EACH LEAD. CONNECT ALL IDENTICALLY MARKED CABLES TOGETHER WHEN MAKING CONNECTIONS.

12 LEAD HIGH WYE CONNECTION

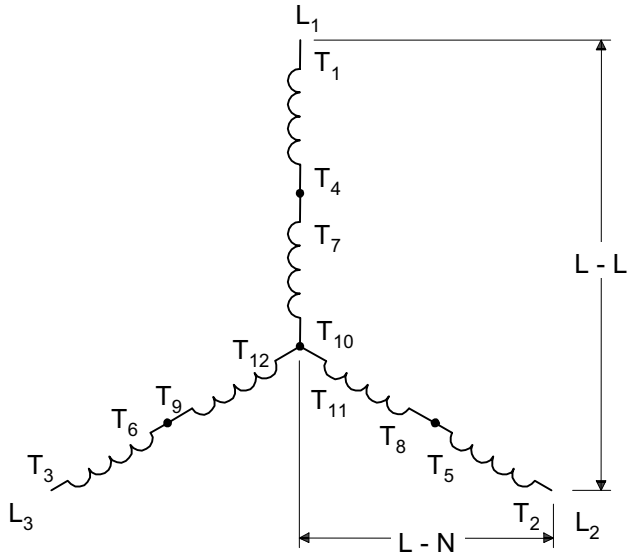

VOLTAGE		
	L-L	L-N
60 HZ	480 460 440 416 380	277 266 254 240 219
50 HZ	416 400 380	240 231 219

12 LEAD LOW WYE CONNECTION

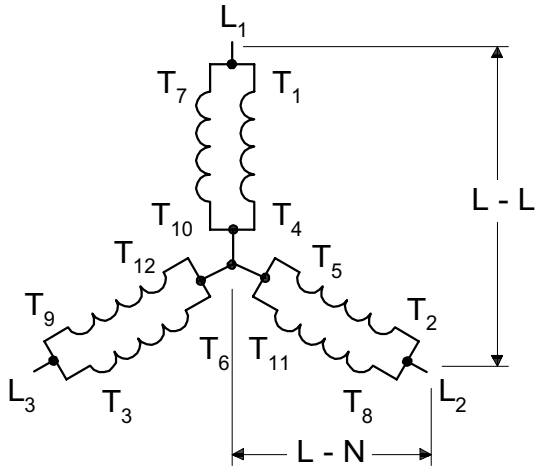

VOLTAGE		
	L-L	L-N
60 HZ	240 230 220 208 190	139 133 127 120 110
50 HZ	208 200 190	120 115 110

12 LEAD HIGH DELTA CONNECTION

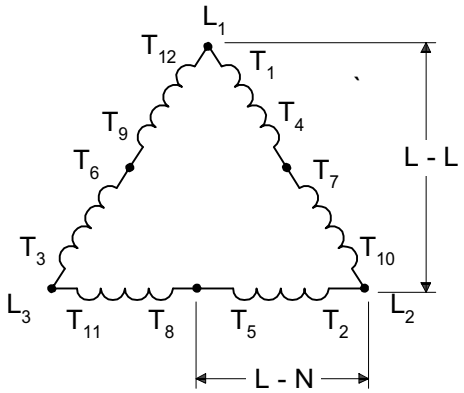

VOLTAGE		
	L-L	L-N
60 HZ	240 277	120 139
50 HZ	200 220 240	100 110 220

12 LEAD LOW DELTA CONNECTION

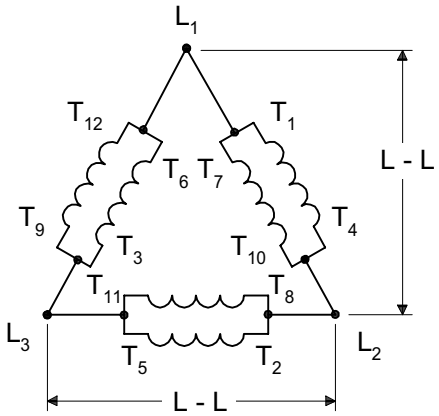

VOLTAGE		
	L-L	L-N
60 HZ	120 139	NA
50 HZ	100 120	NA

10 LEAD HIGH WYE CONNECTION

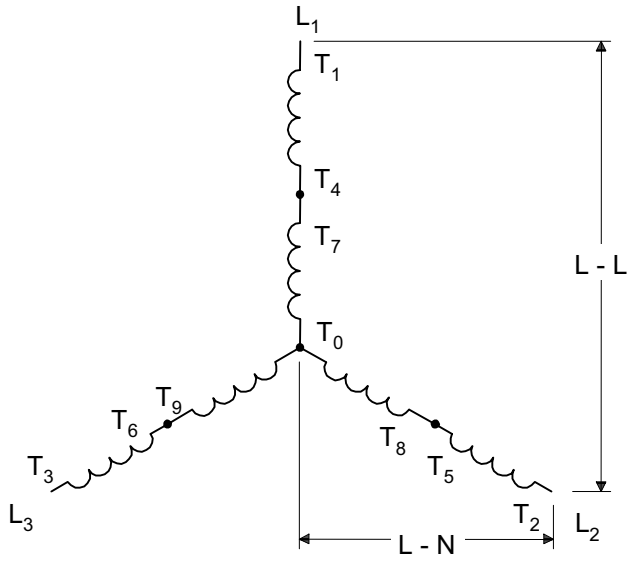

VOLTAGE		
	L-L	L-N
60 HZ	480 460 440 416 380	277 266 254 240 219
50 HZ	416 400 380	240 231 219

10 LEAD LOW WYE CONNECTION

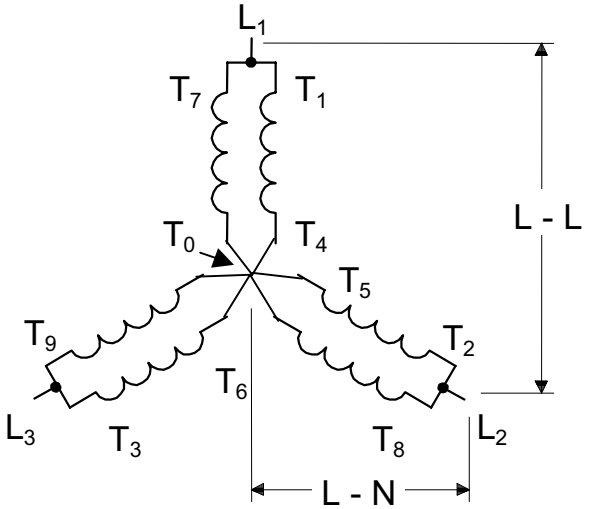

VOLTAGE		
	L-L	L-N
60 HZ	240 230 220 208 190	139 133 127 120 110
50 HZ	208 200 190	120 115 110

6 LEAD WYE CONNECTION

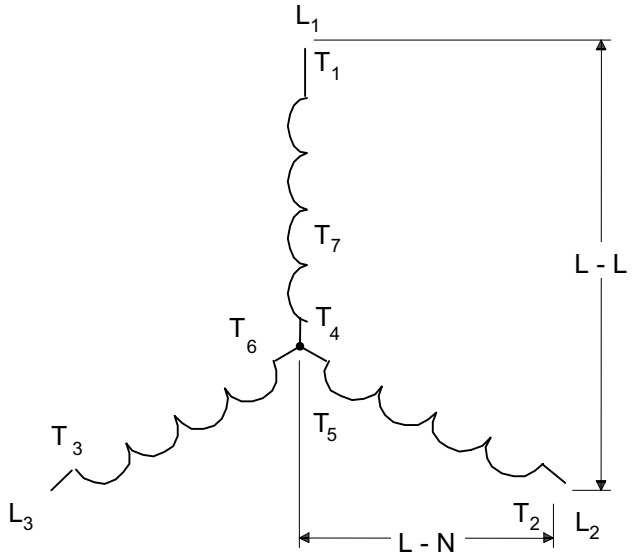

VOLTAGE		
	L-L	L-N
60 HZ	13800 6600 4160 3300 240 230 220 203 190	7967 3811 2400 1905 139 1363 127 120 110
50 HZ	11000 6600 3300 208 200 190	6351 3811 1905 120 115 110

6 LEAD DELTA CONNECTION

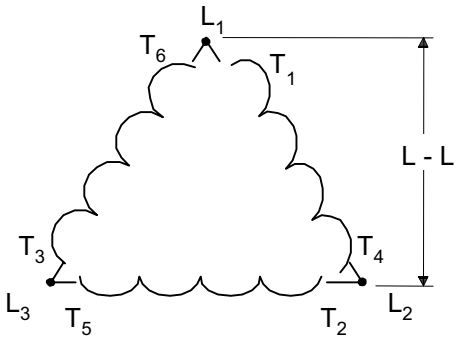

VOLTAGE		
	L-L	L-N
60 HZ	7967 2400	NA
50 HZ	6351 1905	NA

3 LEAD DELTA CONNECTION

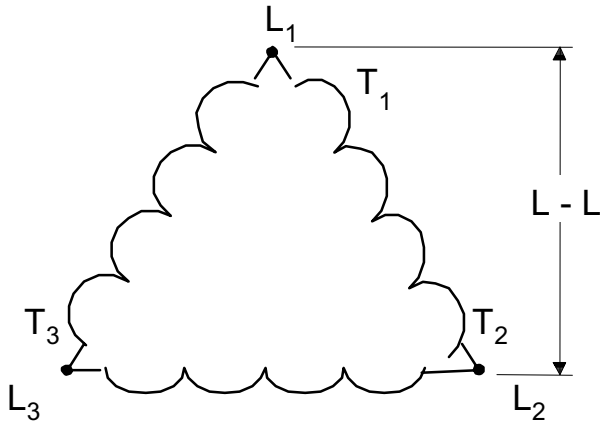

VOLTAGE		
	L-L	L-N
60 HZ	7967 2402	NA NA
50 HZ	6351 1905	NA NA

4 LEAD WYE CONNECTION

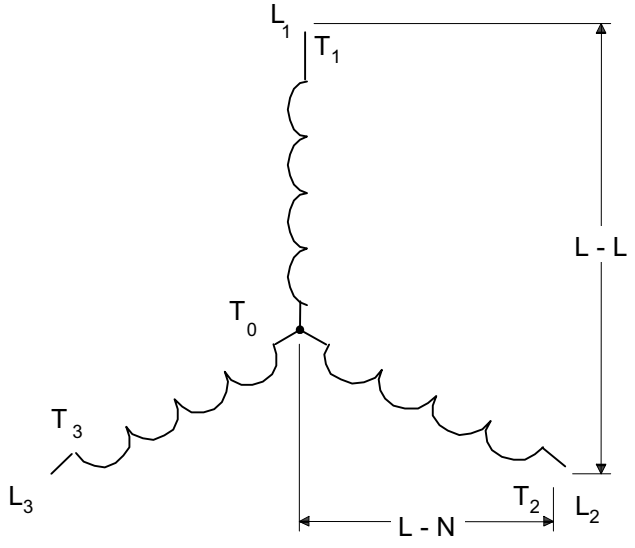

VOLTAGE		
	L-L	L-N
60 HZ	13800 6600 4160 3300 2400 600 480 380	7967 3811 2400 1905 1386 346 277 219
50 HZ	11000 6600 3300 416 400 380	6351 3811 1905 240 231 219

DOUBLE DELTA -- SINGLE PHASE CONNECTION

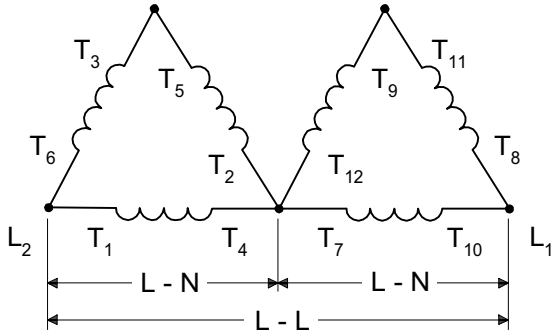

VOLTAGE		
	L - L	L - N
60 HZ	240 220 200	120 110 100
50 HZ	220 200	110 100

LOW ZIG ZAG -- SINGLE PHASE CONNECTION

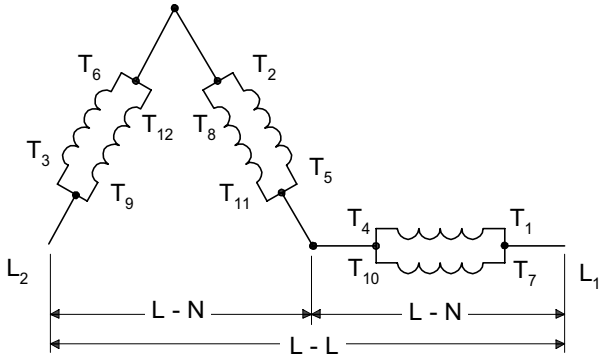

VOLTAGE		
	L - L	L - N
60 HZ	240 220 200	120 110 100
50 HZ	220 200	110 100

HIGH ZIG ZAG -- SINGLE PHASE CONNECTION

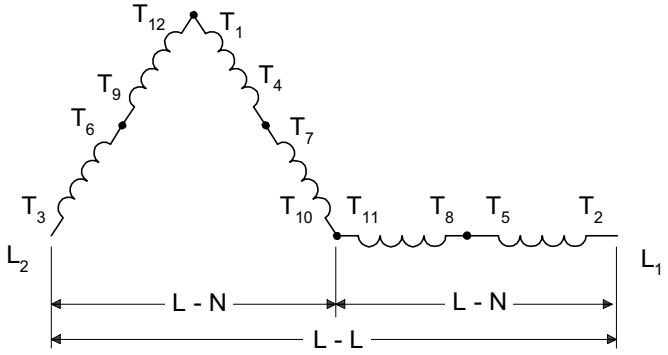

VOLTAGE		
HZ	L - L	L - N
60	480 440	240 220
50	440 400	220 200

PARALLELING OPERATIONS

MagnaMAX^{DVR} generators come standard with amortisseur windings die cast as an integral part of the rotor. This exclusive, Unirotor^{TM}, construction makes all MagnaMAX^{DVR} generators suitable for paralleling operations when the proper control equipment is added. Paralleling with other generator sets and / or with the utility power grid offers a number of advantages. Multiple unit installations increase power capacity; they can be added or removed from the line depending on the load requirements; they can be better maintained and repaired (since single source breakdown would mean total loss of power), and they often provide more reliable, efficient, and economical operation.

Successful parallel operation means that the generators deliver power to the external system without delivering power to each other, or accepting power from the load bus or power grid. Additional equipment is necessary to insure safe and successful operation.

PRIME MOVER

The prime mover provides the speed and torque which will be necessary to keep the machines in synchronized operation. A governor controls the prime mover's speed. The governor will directly control the watt or kW output and frequency of the unit. The governor must have special paralleling provisions to permit parallel operation with the other machines.

VOLTAGE REGULATOR

The voltage regulator controls the generator output voltage and the reactive power supplied by the generator. When two or more ac generators operate in parallel, the voltage regulator must have paralleling provisions (either internally or external to the regulator) to control the reactive or VAR load while it is in parallel operation. A separate paralleling current transformer is required to sense the reactive current and signal the voltage regulator. This additional paralleling circuitry is absolutely necessary to control the reactive current flowing between the generator sets.

SWITCHGEAR

There are additional relays and breaker controls that are necessary to insure safe, trouble free operation of paralleled units. Reverse power relays monitor the direction of power flow to insure that the generator is delivering power, not accepting it. These power relays control breakers, which are a means of connecting and disconnecting the generator from the load. The total system can include over-voltage, over-current protection, under frequency protection, power factor correction provision and a variety of associated control equipment from manual switchgear to microprocessors. The amount of control gear and level of sophistication will be determined by the needs and requirements of the particular application.

PARALLELING BASICS

The following points are basic criteria which must be met before two units can be paralleled. **THIS IS NOT MEANT TO BE SPECIFIC INSTRUCTIONS FOR PARALLELING OPERATION.**

1. Additional paralleling circuitry
   - A. Voltage regulator-paralleling provisions
   - B. Paralleling current transformer(s)
   - C. Paralleling provisions on governor controls
   - D. Switchgear

2. The voltage and frequency must be the same for all sets with voltages in phase.

3. The voltage regulation characteristics of the individual generators should be similar.

4. The generators must have the same phase rotation.

5.The driving engines should have the same speed regulation characteristics and the governors should be adjusted to give the same speed regulation.

Before operating generator sets in parallel, each set should be checked by starting, operating, and adjusting the sets as individual units before attempting paralleling.

REACTIVE LOAD CONTROL

When two identical generators are operating together in parallel and an unbalance occurs in field excitation, circulating currents begin to flow between the generators. This current will appear as a lagging power factor or inductive load to the highly excited generator, and as a leading power factor or capacitive load to the generator with the lower field current. This is known as the reactive circulating current and there are two methods of controlling it in parallel operation:

1. Reactive droop compensation. (Formerly known as parallel droop compensation.) The bus voltage droops, or decreases, as the reactive lagging power factor load is increased.

2. Reactive differential compensation. (Formerly known as cross current compensation.) The reactive differential compensation circuit allows parallel generators to share reactive loads with no decrease or droop in generator voltage.

The circuit must meet the following criteria:

A. All paralleling current transformers for all the generators being paralleled must be included in the secondary interconnection loop.

B. When different size generators are paralleled all paralleling current transformers must have the same proportional ratios that give approximately the same secondary current.

C. Voltage regulator paralleling circuitry must be the same.

D. Current transformer secondary and the generator lines must be isolated electrically.

E. It is also desirable to have an auxiliary contact on the main generator breaker to short the parallel CT secondary when that breaker is open (not connected to the load bus).

Because of the above criteria, reactive differential compensation cannot be used when paralleling with the utility power grid. There is no limit, however, in the number of generators that can be included in this type of circuit.

PARALLELING CIRCUITRY

Because of the number of variables involved in paralleling generator sets, every installation will have its own circuitry and methods or procedure of bringing paralleled units on line. There are numerous ways of connecting paralleled units and an almost unlimited variety of applications and associated equipment.

When parallel operation is desired, it is important that the control manufacturer, the generator manufacturer, and the systems engineer work together to insure the proper selection of all components. Please refer to Katolight for application assistance.

THYRISTOR OR SCR LOADING

Solid state electronic control devices which utilize thyristors or SCR firing circuits (such as variable frequency induction motor controls, precision motor speed controls, no-break powered battery chargers, etc.) can introduce high frequency harmonics which adversely affect or destroy the normal waveform of the generator. This creates additional heat in the generator stator and rotor, and can cause overheating. These devices can and do present problems to non-utility power generating equipment or any limited power bus system. The problems that can occur are not limited to the generator itself, but can effect the solid state control device, the equipment it controls, other associated loads, monitoring devices or a number of combinations over the entire system.

MagnaMAX^{DVR} generators can supply power to thyristor or SCR loads when properly applied. The standard voltage regulator is PMG powered and senses 3 phase RMS voltages for maximum stability against severely distorted waveforms. SCR type applications such as cranes, shovels, etc., require special consideration of the generator insulation system due to greater dielectric stress and severe environmental conditions. It is important that the control manufacturer, the generator manufacturer, and the systems engineer work together to insure the proper selection of all components. Please refer to Katolight for application assistance.

OPERATION

PRE-START INSPECTION

Before operating the generator for the first time, the following checks are recommended.

1. A visual inspection should be made to check for any loose parts, connections, or foreign materials

2. Check for clearance in the generator and exciter air gap. Be sure the generator set turns over freely. Bar the generator over by hand at least 2 revolutions to be sure there is no interference.

WARNING
DO NOT APPLY ANY FORCE TO THE GENERATOR FAN FOR LIFITNG OR FOR ROTATING THE GENERATOR ROTOR. DISREGARDING THESE INSTRUCTIONS MAY CAUSE PERSONAL INJURY OR EQUIPMENT DAMAGE

3. Check all wiring against the proper connection diagrams and make sure all connections are properly insulated. Support and tie leads to keep them from being damaged by rotating parts or by chafing on sharp corners.

4. Be sure the equipment is properly grounded.

5. Inspect for any remaining packing materials and remove any loose debris, building materials, rags, etc. that could be drawn into the generator.

6. Check fasteners for tightness.

7. Check to be sure no tools or other hardware have been left inside or near the machine.

8. Install and check to be sure all covers and guards are in place and secure.

WARNING
RESIDUAL VOLTAGE IS PRESENT AT THE GENERATOR LEADS AND AT THE REULATOR PANEL CONNECTIONS EVEN WITH THE REGULATOR FUSE REMOVED. CAUTION MUST BE OBSERVED OR SERIOUS PERSONAL INJURY OR DEATH CAN RESULT.

STARTING-UP THE GENERATOR

The following procedure should be followed for starting-up the generator for the first time:

1.The generator output must be disconnected from the load. Be certain that the main circuit breaker is open.

2.Disable the voltage regulator by removing the fuse.

WARNING
DO NOT OVERSPEED THE GENERATOR. EXCESSIVE CENTRIFUGAL FORCES COULD DAMAGE THE ROTATING FIELDS. BE PREPARED FOR AN EMERGENCY SHUTDOWN.

3.Follow the manufacturer's instructions and start the prime mover. Check the speed and adjust to the RPM shown on the generator nameplate.

4. Replace the regulator fuse and adjust the voltage to the required. Check all line to line and line to neutral voltages to be sure they are correct and balanced. If the voltages are not correct shut down immediately and recheck all connections.

5. Close the main circuit breaker and apply the load.

6. Monitor the generator output current to verify it is at or below nameplate amps.

7. Adjust engine speed at full load to 1800 rpm for 60 hertz, 1500 rpm for 50 hertz. (Refer to prime mover/governor instruction manuals.)

8. Before stopping the engine, remove the load by tripping the main circuit breaker.

FIELD FLASHING

The standard MagnaMAX^{DVR} generator is supplied with a PMG (permanent magnet generator). **It will never require field flashing.** In rare cases where a special generator may be furnished without a PMG, refer to the factory for more detailed information. Include the complete generator model and serial number.

VOLTAGE ADJUSTMENTS

The voltage regulator controls the generator output voltage. There is a cover to access the control panel on the side of the generator conduit box

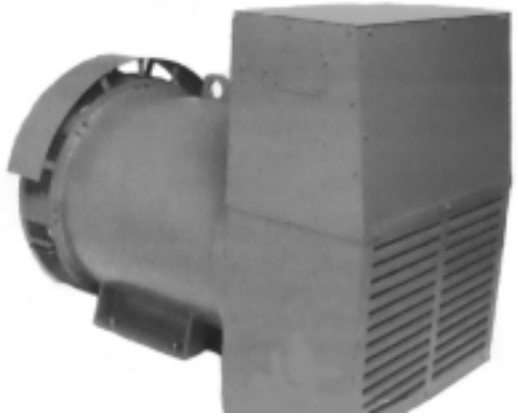

Figure 4-1



Figure 4-2 Regulator Access

Refer to the regulator manual for detailed information. In cases where special or remote mounted regulators are used, refer to instructions supplied by the generator set assembler and to the voltage regulator manual.

OTHER ADJUSTMENTS

Depending upon application, adjustments to other protective and control gear may be required. Refer to instructions provided by the by the supplier of the generator set.

The standard MagnaMAX^{DVR} voltage regulator also has many protective and control circuits.

It is imperative that the set up instructions for any regulator supplied be followed.

MAINTENANCE

GENERAL INFORMATION

Dirt, heat, moisture, and vibration are common enemies of a generator. Keeping the generator clean and dry, maintaining proper alignment of the generator and its prime mover, and preventing overloads will result in efficient operation and long life.

Generators that are outdoors should be protected from the elements by suitable houses or enclosures.

Dirt and dust will conduct electricity between points of different electrical potential. Moisture will aggravate the problem further. Insulation system failure can result if corrective action is not taken. Measuring insulation resistance can test the condition of the insulation system.
(See Generator Testing.).

Insulation resistance should be checked when putting the generator into service after it has been in storage and anytime contamination by moisture and dirt is suspected.

Normally, moisture buildup is not a problem while the generator is running, since heat produced internally will tend to keep it dry but can collect in the generator when it is shut down. The problem will be worse in humid environments or in areas where extreme temperature changes cause condensation (dew) to form inside the generator.

Space heaters, air filters, and premium insulation systems, such as our VPI process, should be considered in difficult environments.

Accumulations of dust and dirt not only contribute to insulation breakdown, but they can also increase temperature by restricting the dissipation of heat. Materials such as talc, lint, rock dust, or cement dust may obstruct the ventilation.

The most harmful types of foreign materials include carbon black, metallic dust and similar substances that not only impede ventilation, but also form a conductive film over the insulation, increasing the possibility of insulation failure.

Machines operating in dirty places should be disassembled and cleaned periodically.

AIR INTAKE AND EXHAUST

Check the area around the air intake and exhaust openings to be sure they are unobstructed.

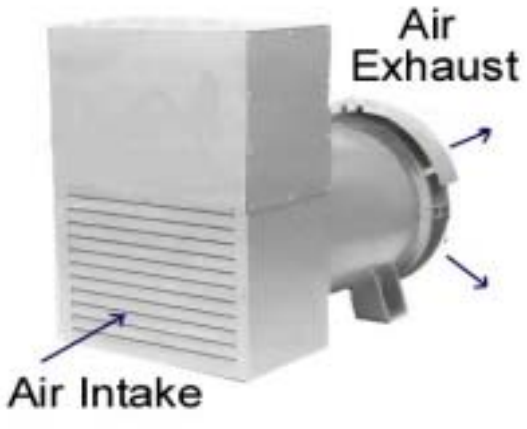

Figure 5-1

ELECTRICAL CONNECTIONS, WINDINGS

Inspect for loose or contaminated connections Check wires for cracked or frayed insulation. Tighten connections and replace defective or oil soaked insulation.

If inspection shows that varnish coatings on the windings have deteriorated, they should be coated with insulating varnish.

Please refer to Katolight for insulation system requirements.

LUBRICATION

All generators are lubricated before leaving the factory and are ready for operation. As a general rule, bearings should be re-lubricated annually or at the indicated intervals in table 5-3, whichever occur first.

Unusually severe operating conditions, such as high ambient or dusty environments, require more frequent lubrication (every six months or one half the table intervals, whichever occurs first).

Use Chevron SRI or equivalent anti-friction type high quality, grease with a lubrication temperature' range of -22° to +350° F (-30° to +175° C)

To add or renew grease, proceed as follows:

1. Stop unit.

2. Wipe the grease plugs and surrounding parts to insure they are clean.

3. Remove both the fill and drain plugs. See figure 5-2

4. Insert 1/8" N.P.T. grease fitting in fill pipe.

5. Free the drain holes of any hard grease, using a piece of wire it necessary.

6. Using a low-pressure grease gun, add grease according to the amounts in table 5-3.

7. Start unit with drain plug removed - fill pipe may be open or closed. Allow unit to run 15 minutes to allow excess grease to drain.

8. Stop unit, wipe off any drained grease, and replace filler and drain plugs.

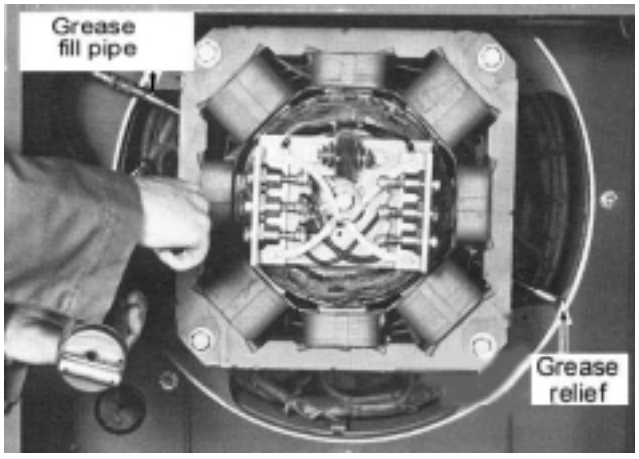

Figure 5-2

The amount of grease added is very important! Only enough grease should be added to replace the grease used by the bearing.

CAUTION: TOO MUCH GREASE CAN BE AS HARMFUL AS INSUFFICIENT GREASE. USE THE PROPER AMOUNT.

Type	Frame Size	Bearing Size	Amount of Grease			Intervals --- Max. hours or annually	
			Ounces	Cubic Inches	Teaspoons	60 Hz	50 Hz
Single Bearing Units	431,432, 433	314	1.2	2.1	7.0	6500	8400
	571,572, 573, 574	316	1.5	2.6	8.3	5600	7200
	741, 742, 743,744	322	2.4	4.2	14.0	3000	4500
Double Bearing Units	431,432	318	1.7	3.0	9.9	4600	6200
	571, 572, 573, 574	318	1.7	3.0	9.9	4600	6200
	741, 742, 743, 744	322	2.4	4.2	14.0	3000	4500

TABLE 5-3

During an overhaul, the grease reservoir should b thoroughly cleaned and new grease added. The reservoir should be 1/3 to 1/2 filled with new grease

DRYING ELECTRICAL INSULATION

Electrical components must be dried before placing in operation if tests indicate that the insulation resistance is below a safe value. (See Generator testing for test procedure.)

Machines that have been idle for sometime in unheated and damp locations, may have absorbed moisture. Sudden changes in temperature can cause condensation or the generator may have become wet by accident. Windings should be dried out thoroughly before being put into service. The following are recommended drying methods.

Space Heaters

Electric space heaters can be installed inside of the generator. When energized (from a power source other than the generator) they will heat and dry the inside of the generator. If an alternate source of electricity is not available, enclose the generator with a covering and insert heating units to raise the temperature 15-18 degrees F (8-10 degrees C) above the temperature outside of the enclosure. Leave a hole at the top of the enclosure to permit the escape of moisture.

Oven

Place the machine in an oven and bake it at a temperature not to exceed 194 F (90°C). The voltage regulator and any electronic component accessories must be removed from the generator when using this method.

Forced Air

A portable forced air heater can be used by directing heat into the air intake (conduit box) and running the generator with no load and without excitation (this can be accomplished by removing the regulator fuse). Heat at point of entry should not exceed 150° F (66° C).

"Short Circuit" Method

Using this method can dry out the generator quickly and thoroughly.

WARNING:
BE SURE THAT ALL OF THE FOLLOWING STEPS ARE PERFORMED AND ALL PRECAUTIONS TAKEN AS PERSONAL INJURY OR SERIOUS DAMAGE TO THE GENERATOR COULD RESULT.

1. Disconnect exciter leads Fl and F2 from the regulator.

2. Connect a battery or other dc power source approximately 20-35 volts to the exciter lead Fl and F2. An adjustable voltage source desirable, however, a rheostat (rated approximately 2 amps) in series with the dc power source will work.

3. Short circuit the generator output lead wires to each other (L1 to L2 to L3). If using jumpers, be sure they are large enough to carry full load amps.

4. Start the generator and measure the current through the output leads with a clip-on ammeter.

5. Adjust the voltage source to produce approximately 80% of the rated ac nameplate current but in no case exceed nameplate amps. If a adjustable source is not available and current is excessive, use a lower dc source voltage or larger resistor in series with the source.

Running time will be determined by the amount of moisture present in the machine. Insulation resistance checks should be taken every one to four hours until a fairly constant value obtained. (See section -

Generator testing for instructions on measuring insulation resistance.)

6. After the generator is dry and the insulation resistance is brought up to specification remove the short circuit from the line lead disconnect the dc source and reconnect the F and F2 leads at the regulator. Be sure all connections are tight and correct before attempting to run the generator.

CLEANING METHODS

When electrical components get dirty, the insulation must be cleaned. There are a number of acceptable methods for cleaning the generator, each of which will necessitate disassembly of the unit. The kind of dirt, and when the unit must be returned to service will determine the method of cleaning. Drying after cleaning is necessary.

Whenever the generator is disassembled, the windings should be given a thorough inspection and the insulation cleaned, if necessary. The inspection should include the connection of the windings, insulation, and varnish coverage. Check the winding ties and coil supports. Look for any signs of coil movement or looseness and repair as required.

An electric motor repair shop in your area can normally assist with the proper cleaning of the generator windings. They may also be experienced in special problems (such as seacoast, marine, oilrig, mining, etc.) that may be peculiar to a certain area.

Solvents

A solvent is usually required to remove accumulated soil containing oil or grease. Only petroleum distillates should be used for cleaning electrical components. Petroleum solvents of the safety type with a flash point greater than 100° F (38° C) are recommended. **CAUTION: A SOLVENT THAT DOES NOT ATTACK EPOXY OR POLYESTER BASED MATERIALS SHOULD BE USED.**

Apply the solvent with a soft brush or rag. Be careful not to damage the magnet wire or insulation on the windings.
Dry components thoroughly with moisture-free, low pressure compressed air.

Cloth and Compressed Air

Cleaning with a dry cloth may be satisfactory when components are small, the surfaces are accessible and only dry dirt is removed. Blowing dirt out with compressed air is usually effective particularly when the dirt has collected in places that cannot be reached with a cloth. Use clean dry air at 30 PSI (206 KPA).

Brushing and Vacuum Cleaning

Dry dust and dirt may be removed by brushing with bristle brushes followed by vacuum cleaning. Do not use wire brushes. Vacuum cleaning is an effective and desirable method of removing dry and loose dirt.

Shell Blasting

Air blasting with ground nut shells may be satisfactory for removal of hard dirt deposits from insulation. Use mild abrasives such as 12-20 mesh ground walnut shells.

Steam Cleaning

If the generator is completely disassembled, including bearings and electronic components, steam cleaning of the major parts and windings is very effective. However, the machine must be thoroughly dried in an oven to remove all moisture before the generator can be put back into service.

DISASSEMBLY

REMOVAL FROM PRIME MOVER

BE SURE ALL POWER IS OFF BEFORE SERVICING. FAILURE TO FOLLOW ALL SAFETY INSTRUCTIONS CAN RESULT IN SERIOUS INJURY OR DEATH.

NOTE: Before disconnecting any electrical wiring, be sure it is marked and can be identified for reinstallation. Re-label as required.

1. Remove conduit box covers (Figure 6-1 and 6-2)



Figure 6-1

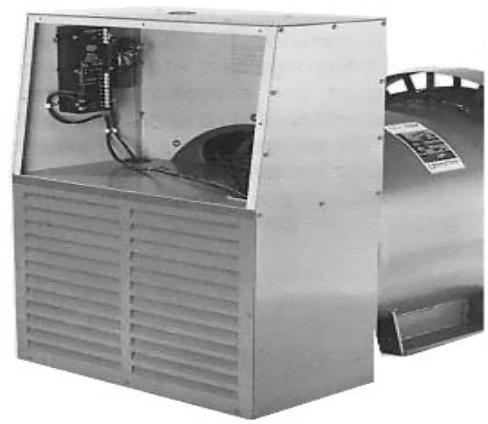

Figure 6-2

2. Disconnect all external wiring from the generator leads inside the conduit box.

3. Remove all conduits or ducting from the conduit box.

4. Attach a suitable hoist to the generator lifting

5. For single bearing generators, remove the bolts mounting the screen assembly to the SAE adapter and remove the screen. (Figure 6-3.)



Figure 6-3

(NOTE: Do not remove the drip cover from the screen assembly if so equipped)Remove the cap screws attaching the drive discs to the flywheel and remove the cap screws attaching the SAE adapter to the flywheel housing.

For two-bearing generators, disconnect the coupling or sheave and belts between the generator and prime mover. (Follow the coupling manufacturer's instructions for direct connection.)

WARNING
DO NOT APPLY ANY FORCE TO THE GENERATOR FAN FOR LIFTING OR ROTATING THE GENERATOR

CONDUIT BOX REMOVAL

1. Note the location and markings (re-mark as required) and remove connections from voltage regulator (Figure 6-4), capacitor (Figure 6-5), and any other conduit box mounted controls.

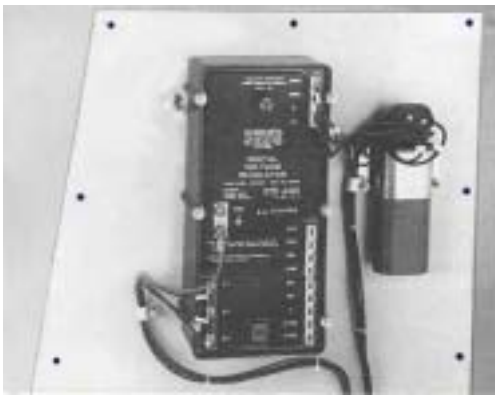

Figure 6-4

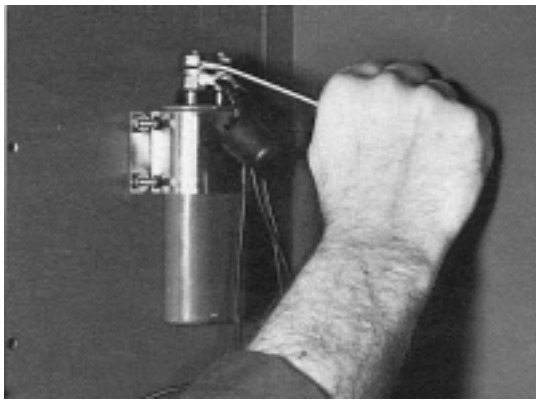

Figure 6-5

2. On generators equipped with bus bars, mark all connections and disassemble main stator (power) leads from the generator side of the bus bars.

3. Remove bolts holding conduit box in place. (Figure 6-6.)



Figure 6-6

4. Remove conduit box. (Figure 6-7).

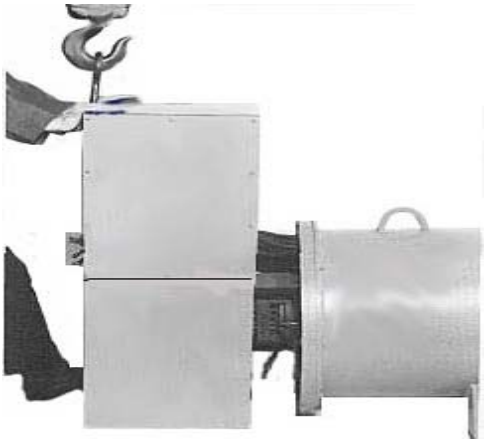

Figure 6-7

EXCITER STATOR (FIELD) REMOVAL

1. Disconnect Fl and F2 leads from the corresponding Fl and F2 terminals on the regulator.

2. Remove all cable ties so the Fl and F2 leads can be removed with the exciter stator. Remove the four cap screws and Belleville washers holding the exciter stator in place. (Figure 6-8.)



Figure 6-8

Remove the exciter stator. Using a lifting strap or fixture. (Figure 6-9.)

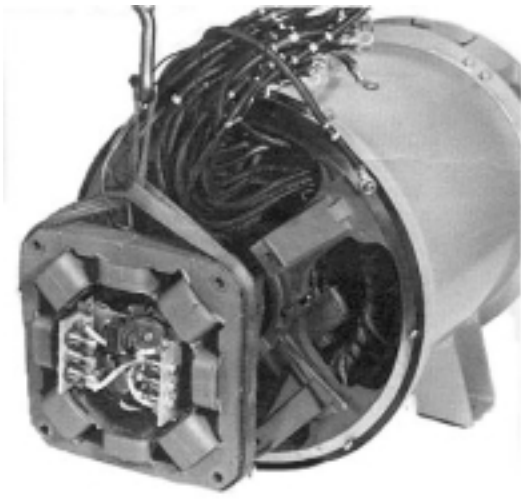

Figure 6-9

EXCITER ARMATURE (ROTOR) REMOVAL

1. Note markings and disconnect the main rotor leads coming out of the lead hole of the aluminum standoff plate from the rectifier aluminum angle. (Figure 6-10.)

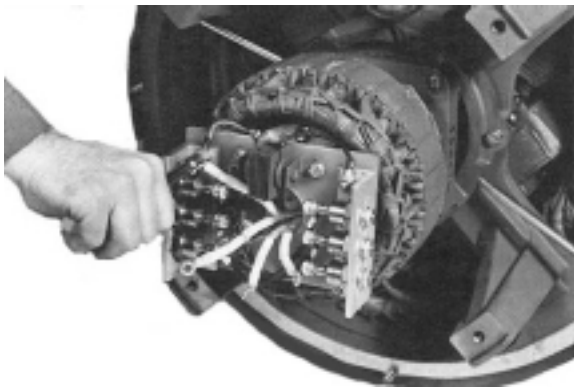

Figure 6-10

2. Remove the cap screw and Belleville washer that holds the exciter (rotor) armature to t generator shaft. (Figure 6-11.)

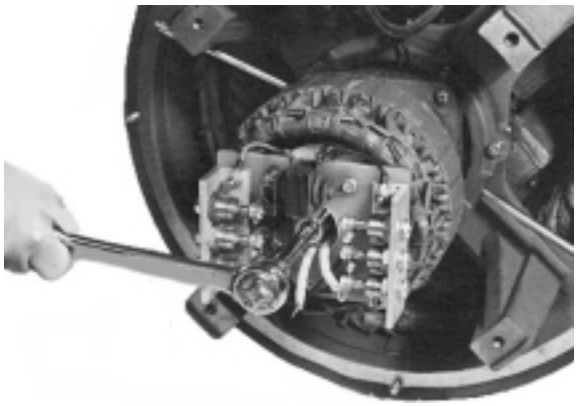

Figure 6-11

3.Use a six inch, 3/4-16NF, cap screw for a puller (See section 9.) The hole that the mounting bolt goes through is threaded. Screw the pull bolt into the hole and it will push against the end of the shaft. (Figure 6-12.)

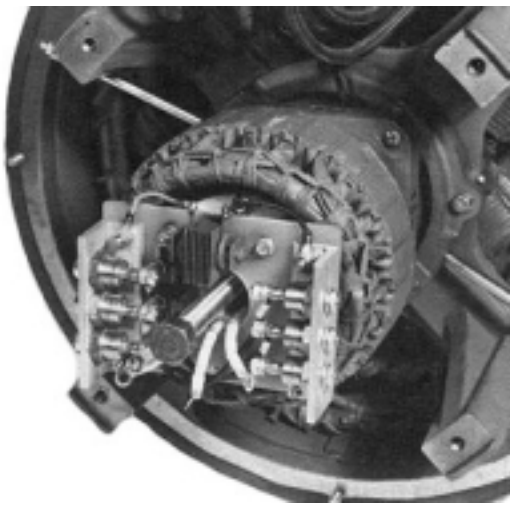

Figure 6-12

Carefully feed the main rotor leads through the hole as the exciter armature is removed. (Figure 6-13.)

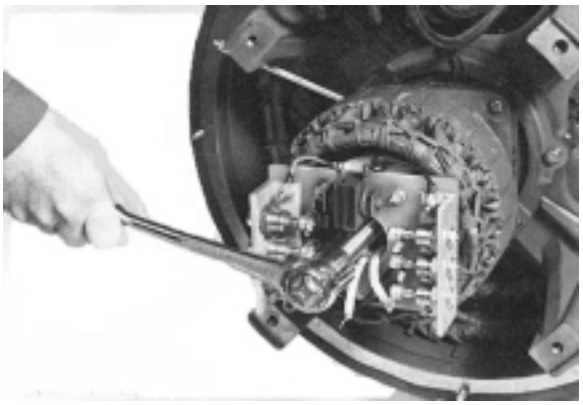

Figure 6-13

CAUTION:
DO NOT TIGHTEN THE PULLER BOLT BEYOND THE END OF THE THREADS. IF A BOLT WITH SUFFICIENT THREAD LENGTH CANNOT BE FOUND, USE A PIECE OF THREADED ROD WITH A NUT WELDED ON THE END.

PMG STATOR REMOVAL

1. Remove exciter armature. (Follow instructions found earlier in this section.)

2. Remove the PMG output leads from the capacitor (Figure 6-14) and loosen all cable ties so the leads can be removed with the PMG stator.

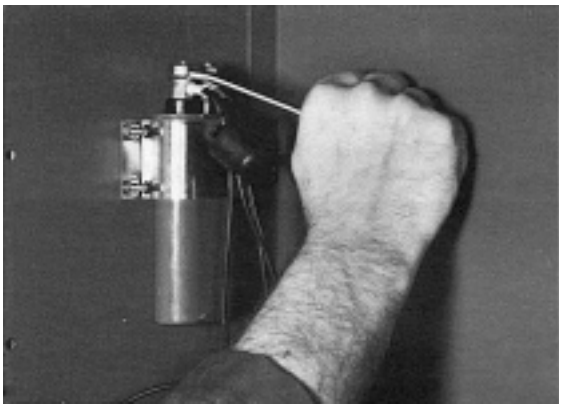

Figure 6-14

3. Note the position of the PMG stator leads that exit at the left inboard side or mark the stator so it can be reinstalled in the same position.

4. Remove the four mounting cap screws. (See Figure 6-15.)

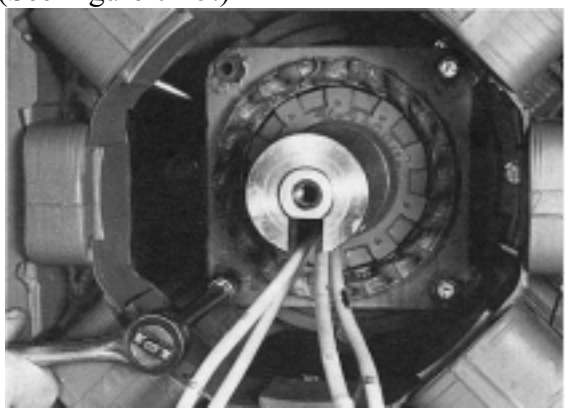

Figure 6-15

5. Carefully remove the PMG stator from its mounting pads and slide over the PMG rotor. The magnets used in the PMG are very strong and will resist removal of the PMG stator. (Figure 6-16.)

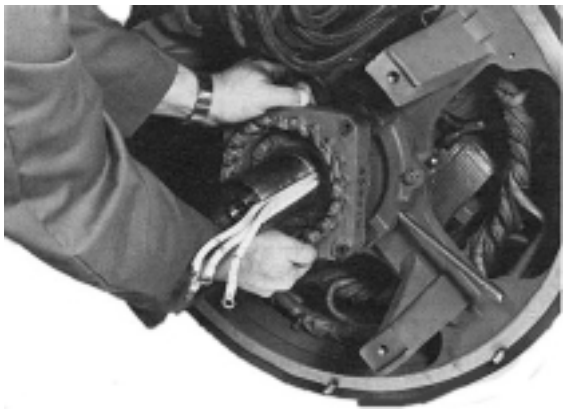

Figure 6-16

PMG ROTOR REMOVAL

1. Remove the exciter armature and PMG stator. (Follow instructions found earlier in this section.)

2. Remove the snap ring that holds the PMG rotor in place on the shaft. (Figure 6-17 and 6-18.)

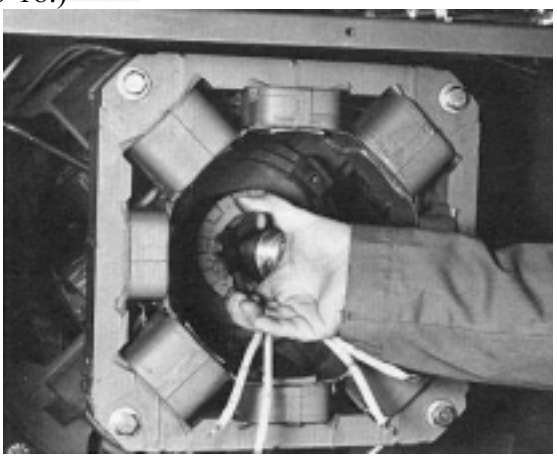

Figure 6-17

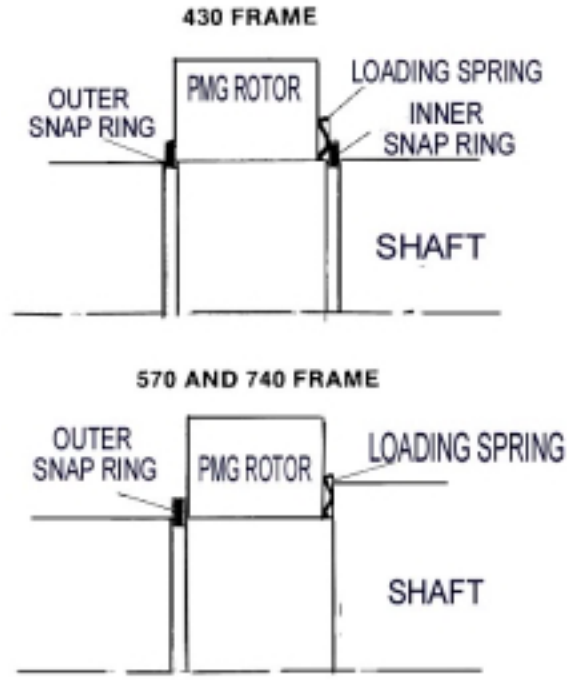

Figure 6-18

3. Slide the PMG rotor off of the shaft. (Figure 6-19.)

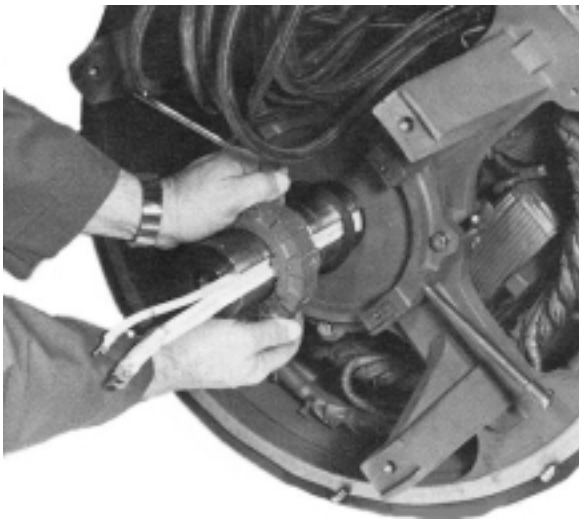

Figure 6-19

4. Remove the loading spring. (if the loading spring is not on the shaft, check to see if it is stuck on the back of the PMG rotor.).

5. On 430 frame generators a second snap ring is used inboard of the PMG rotor. (Larger generators have a step on the shaft.)

This snap ring must be removed before the generator main rotor can be removed. (Figure 6-20.)

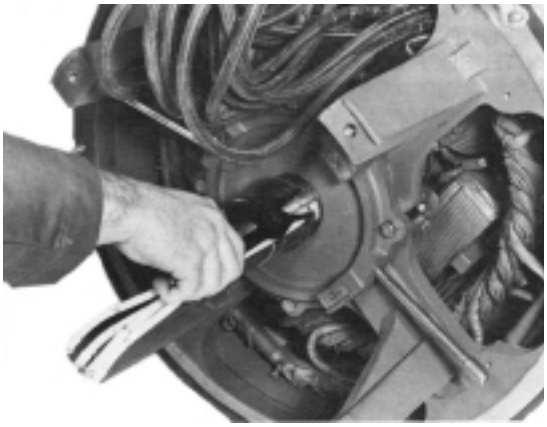

Figure 6-20

MAIN ROTOR REMOVAL

1. Remove the exciter armature and PMG.

2. For single bearing generators, remove the four cap screws holding the bearing caps to the front-end bracket. (Figure 6-21.) Remove the outer cap. (Figure 6-22.)

For two-bearing generators, remove the drive coupling or sheave and key from the shaft extension. Remove the four cap screws holding the bearing lock to the drive end bracket. (Figure 6-23.) Remove the four cap screws holding the bearing caps to the front-end bracket. (Figure 6-21.) Remove the outer cap. (Figure 6-22.)

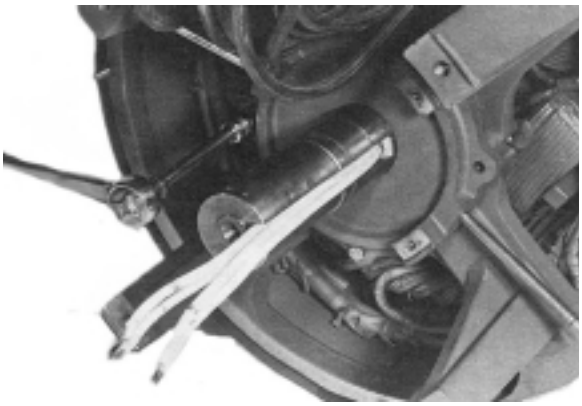

Figure 6-21

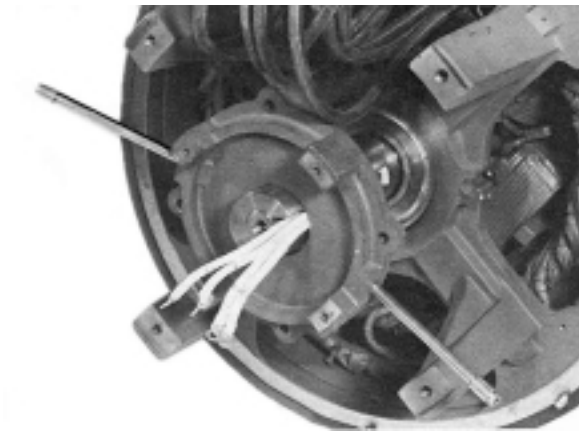

Figure 6-22



Figure 6-23

3. If the screen assembly is still mounted, remove bolts securing the screen assembly to the drive end bracket or the SAE adapter and remove the screen assembly. (Figure 6-24.) (NOTE: Do not remove the drip cover from the screen assembly if so equipped.)

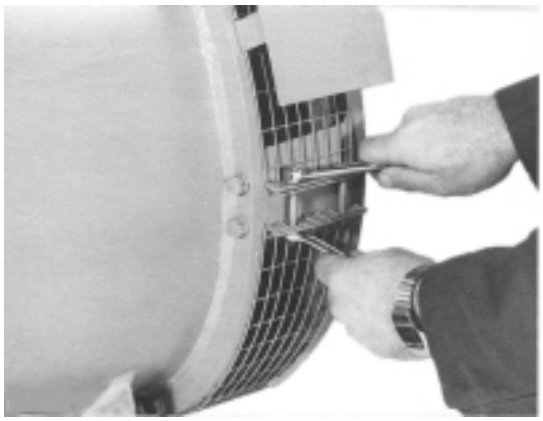

Figure 6-24

4. For single bearing generators, remove the cap screws and hardened washers holding the drive discs to the drive hub. (Figure 6-25.) Remove all drive discs (and spacers if any).

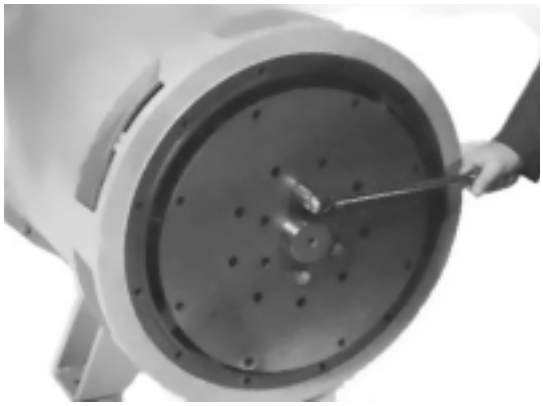

Figure 6-25

5. For single bearing generators, remove the cap screws holding the SAE adapter to the generator and remove the adapter. (Figure 6-26 and 6-27.)

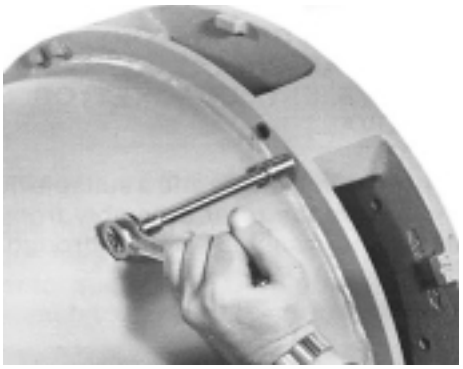

Figure 6-26



Figure 6-27

CAUTION: ON LARGE GENERATORS, A HOIST AND LIFTING STRAP SHOULD BE USED TO ASSIST IN DRIVE END BRACKET OR SAE ADAPTOR REMOVAL

For two bearing generators remove the cap screws holding the drive end bracket to the generator and remove the bracket (Figures 6-26 and figure 6-28)

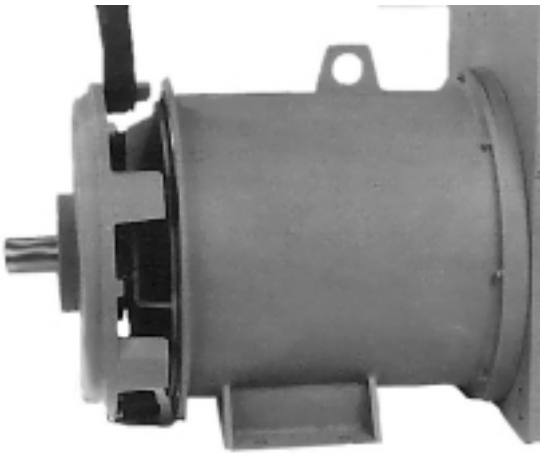

Figure 6-28

6. Using a rotor lifting fixture and a suitable hoist, carefully remove the rotor assembly from the main stator and frame assembly through the drive end. (Figure 6-29.)

CAUTION:
SPECIAL CARE SHOULD BE TAKEN WHEN REMOVING THE MAIN ROTOR, WINDING DAMAGE COULD RESULT IF THE ROTOR IS ALLOWED TO HIT THE MAIN STATOR.

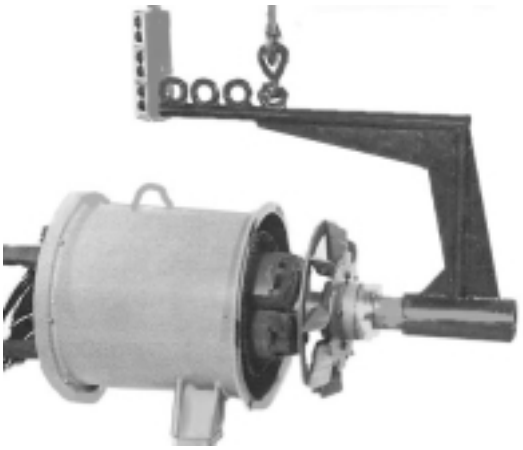

Figure 6-29

WARNING
DO NOT APPLY ANY FORCE TO THE GENERATOR FAN FOR LIFTING OR ROTATING THE GENERATOR ROTOR. DISREGARDING THESE INSTRUCTIONS MAY CAUSE PERSONAL INJURY OR EQUIPMENT DAMAGE.

FRONT END BRACKET REMOVAL

1. Remove front bracket mounting screws. (Figure 6-30.)

2. Remove the front-end bracket from the main stator assembly. (Figure 6-31.)

CAUTION: ON LARGE GENERATORS, A HOIST AND LIFTING STRAP SHOULD BE USED TO ASSIST IN THE FRONT END BRACKET REMOVAL

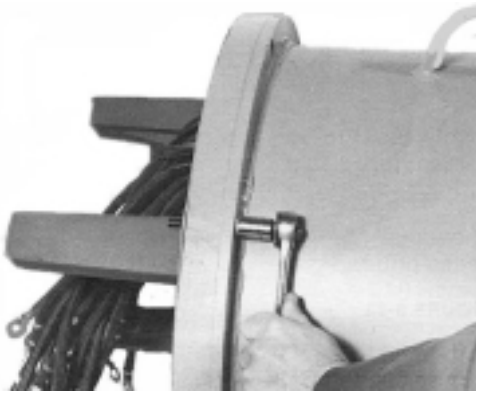

Figure 6-30

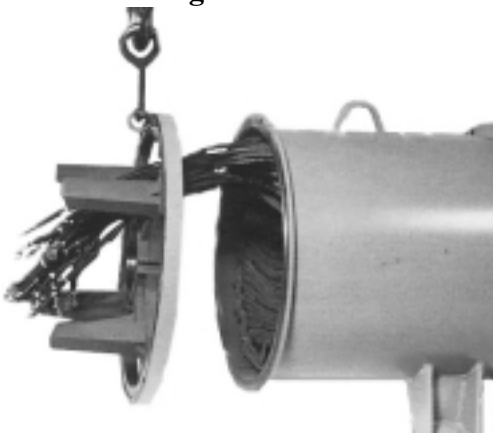

Figure 6-31

EXCITER INSPECTION

EXCITER STATOR

1. Clean dust and dirt from the exciter stator winding. (Figure 6-32.) (See section 5.)



Figure 6-32

2. Check the exciter stator for a loose, frayed, or burnt winding. Measure winding resistance and insulation resistance. (See section 8.)

Repair or replace as necessary. If field repair of the winding is necessary, contact Katolight for special winding procedures and materials.

3. Look for score marks in the bore of the exciter core caused by rubbing. (This could indicate bearing or assembly problems and should be investigated.)

EXCITER (ROTOR) ARMATURE

1. Clean dust and dirt from and rectifier assembly. (Figure 6-33) (See Section 5)

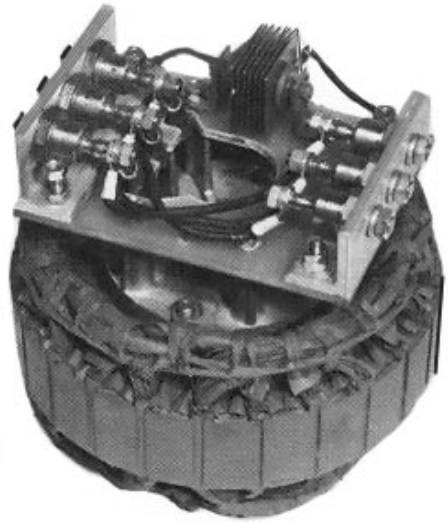

Figure 6-33

2. Check the exciter armature for burrs on the mating surfaces.

3. Check the rectifiers and surge protector for proper operation. Replace defective parts.

CAUTION: THREE FORWARD AND THREE REVERSE POLARITY DIODES ARE USED. BE SURE THE CORRECT PART IS INSTALLED IN THE CORRECT LOCATION. THE SURGE SUPRESSOR IS POLARIZED. OBSERVE POLARITY MARKINGS WHEN CHANGING THE SURGE SUPRESSOR

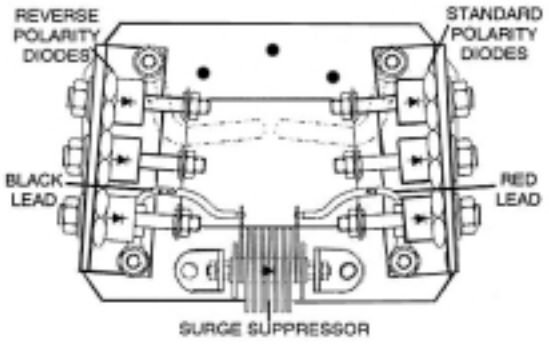

Figure 6-34

Torque mounting nuts to 80 in-lb. Torque lead terminal nuts to 25 in-lb. Never torque against the diode terminal - use a 7/16-in. wrench to support the terminal.

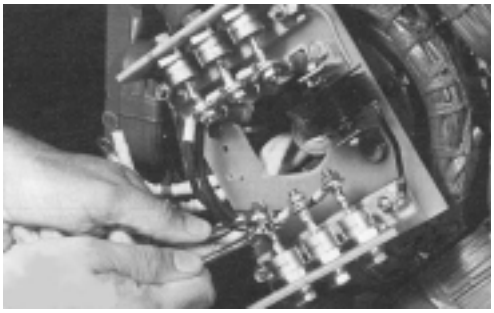

Figure 6-35

4. Check the exciter armature and rectifier assembly for loose, frayed, or burnt winding or loose connections. Measure winding resistance and insulation resistance. DO NOT megger diodes or surge suppressor. Repair or replace as necessary. If field repair of the winding is necessary, contact Katolight for special winding procedures and materials.

5. Look for score marks on the outside diameter of the armature core caused by rubbing. (This could indicate bearing or assembly problems and should be investigated.)

PMG INSPECTION

PMG STATOR

1. Clean dust and dirt from the PMG stator winding.

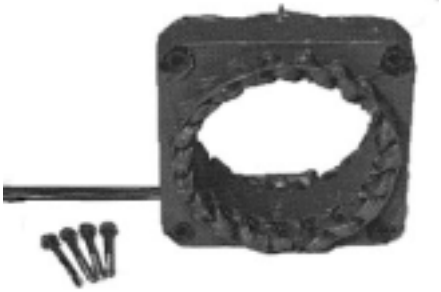

Figure 6-36

2. Check PMG stator for a loose, frayed, or burnt winding. Measure winding resistance and insulation resistance. (See section 8.) Repair or replace as necessary. Contact Katolight for special winding procedures and materials.

3. Look for score marks in the bore caused by rubbing.

PMG ROTOR

WARNING
THE PMG ROTOR USES VERY STRONG MAGNETS. KEEP AWAY FROM IRON AND STEEL PARTS THAT COULD BE DRAWN TO THE MAGNETS AS WELL AS OTHER COMPONENTS THAT CAN BE DAMAGED BY MAGNETIC FIELDS.



Figure 6-37

1. Clean dust and dirt from the PMG rotor.

2.Check to be sure all magnets are tightly bonded to the PMG rotor.

3.Check the bore and keyway of the PMG rotor for burrs or corrosion.

4.Look for score marks on the outside diameter caused by rubbing. (This could indicate bearing or assembly problems and should be investigated.)

5. Inspect snap rings and loading spring, replace as required.

MAIN ROTOR INSPECTION

BEARING

1. Check the bearing for damage or wear. Clean old grease from the bearing cap, and fill bearing cap grease cavity 1/3 to 1/2 full of r Chevron SRI (or equivalent).

CAUTION: If the bearing needs to be removed any reason, always install a new bearing.

2. If the bearing is to be replaced, remove with suitable puller. (Figure 6-38.)

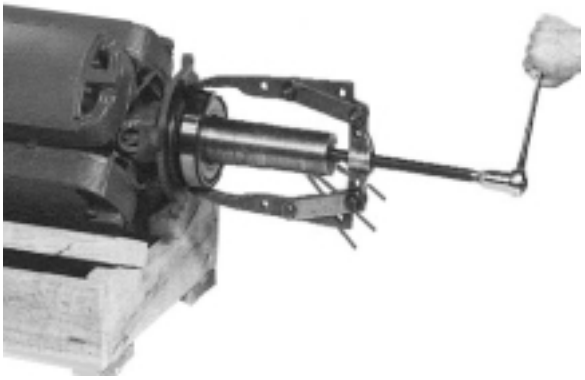

Figure 6-38

3.Be sure the inner bearing cap is on the shaft before installing the new bearing.

4. Heat the new bearing in an oven to a maximum temperature of 212°F (100°C). Apply a thin coat of clean lubricating oil to the press-fit area of rotor shaft. Install the bearing over the end of the shaft until it seats against the shaft shoulder as shown in Figure 6-39. The bearing should slide on the shaft and seated without excessive force. If the bearing binds on the shaft before being fully seated a piece of tubing, slightly larger than the press area, can be used to drive the bearing into place. Using light taps with a soft mallet, apply pressure to the inner race only.

CAUTION:
UNDER NO CIRCUMSTANCES SHOULD PRESSURE BE APPLI ED TO THE OUTER RACE OF THE BEARING, AS PERMANENT BEARING DAMAGE COULD RESULT.



Figure 6-39

Allow the bearing to cool for one hour before attempting to assemble the generator.

FAN

1. Check the fan for cracks or broken blades. Replace the fan if defective.

2. Mark the hub and fan for alignment, this is necessary to be sure the balance weights will be in the same position when the fan is reinstalled.

3. For single bearing generators. Remove the fan mounting cap screws (Figure 6-40) and slide the fan off the shaft. (Figure 6-41.) For two-bearing generators, remove the drive end bearing and bearing cap. (See bearing removal instructions.) Remove the fan mounting cap screws and slide fan off the shaft. (Figure 6-40 and 6-41.)

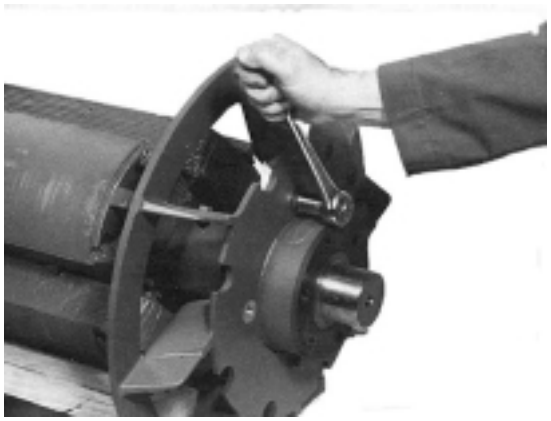

Figure 6-40

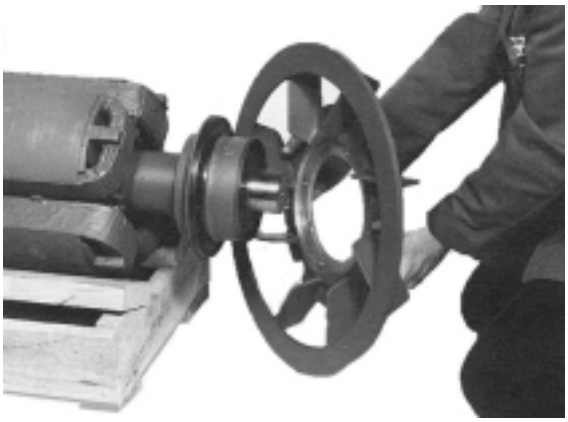

Figure 6-41

4. To reinstall, slide the fan on the shaft making sure the fan-mounting surface is toward the drive hub. Align reference marks (this is important for assembly balance) and mount the fan to the drive hub with the cap screws and Belleville washers. (Figure 6-42.) Torque the cap screws to 60 ft-lb. (81 N-m).

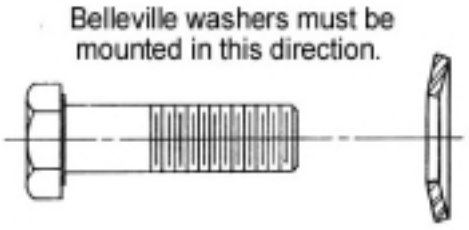

Figure 6-42

5. NOTE: Balance weights on the fan are for balance of the complete rotor assembly. The rotor assembly should be rebalance if a new fan has been installed.

6. On two-bearing generators, install bearing cap and new bearing according to the bearing assembly instructions. (Item A.)

Drive Hub (Single Bearing Generators)

1. Check the drive hub for cracks or stripped drive disc mounting holes. Replace the hub if defective.

2. If the hub is to be replaced, remove the fan (See Item B) and install a suitable puller to the hub. Remove the two set screws in the hub over the key. Using a torch, rapidly heat the hub at the outer diameter while tightening the puller. (This must be done rapidly before the heat can expand the shaft.) Remove the hub. (Figure 6-43)



Figure 6-43

3. To insure proper fan location, mark the new hub in the same place as the old hub relative to the keyway. Install key in shaft. Heat the new hub in an oven to 500°-600°F (260°-316°C). Use suitable heat resistant gloves, slide the hub over the key in the shaft until it seats against the shaft shoulder. (Figure 6-44.)

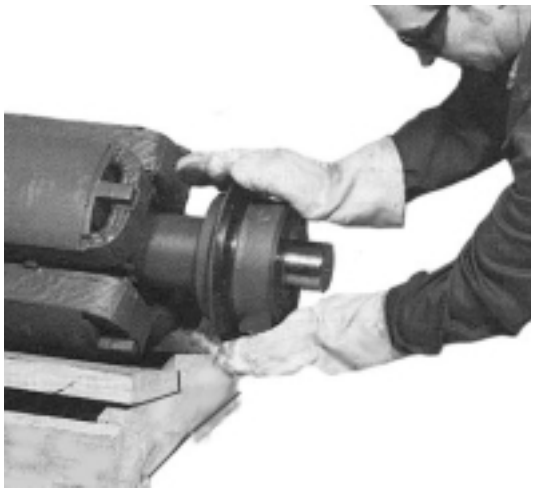

Figure 6-44

4. Allow the hub to cool for one hour. After the hub has cooled, tighten the set screws in the hub to 50 ft-lbs. (68 N.M.) torque. Match the alignment marks on the fan and hub and mount the fan. (See item B.)

5. Rebalancing the rotor assembly is not necessary if only the hub is replaced and the fan is mounted in the same location relative to the hub and shaft.

MAIN ROTOR CORE AND WINDINGS

1. Clean all parts. Remove dust and dirt from the rotor winding air passages with low-pressure, moisture-free air.

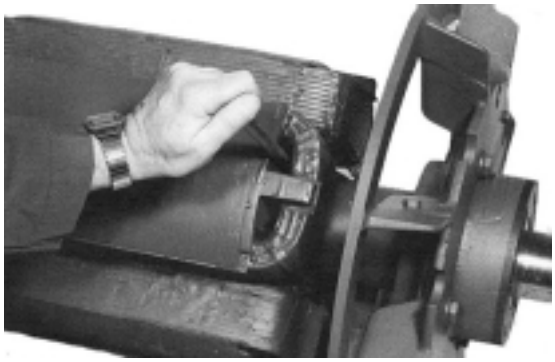

Figure 6-45

2. Check the rotor for loose, frayed, or burned windings. Measure winding resistance an insulation resistance. Test for shorted turns using an A-C impedance test A defective rotor winding must be rewound The rotor assembly must be rebalanced after any rework or repair has been completed.

DRIVE DISCS (SINGLE BEARING GENERATORS ONLY)

1. Inspect the drive discs for distorted or bent edges. (Figure 6-46) Inspect for worn mounting holes. Replace all defective discs as necessary.

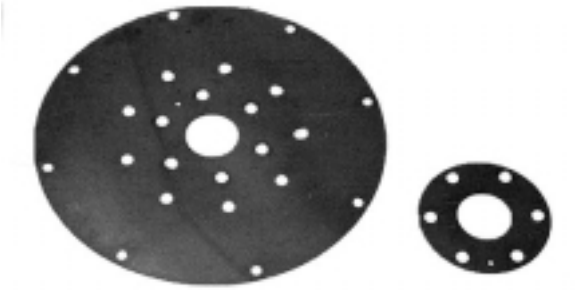

Figure 6-46

2. Inspect the drive disc mounting cap screws for damaged threads. Replace cap screws if damaged.

FRONT (EXCITER) END BRACKET INSPECTION

1. Remove the filler and drain grease pipes and the grease plugs from outer bearing cap. (Figure 6-47.)



Figure 6-47

2. Clean the end bracket, outer bearing cap, grease pipes, and cap screws to remove all dust, dirt, and grease.

3. Inspect the cap screws for stripped threads and replace if defective.

4. Inspect the end bracket for stripped threads, cracks, and burred or rough mating surfaces. Inspect the bearing bore for burrs or wear. If the bracket shows excessive bearing bore wear, it should be repaired or replaced. (Figure 6-48.)



Figure 6-48

5. Inspect the mounting pads for the PMG stator and exciter stator. Be sure they are smooth, clean, and free of any burrs or rust. That could interfere with proper alignment. (Figure 6-47 and 6-48.)

6. Re-assemble the grease pipes and fittings to the bearing cap.

DRIVE END BRACKET OR SAE ADAPTER INSPECTION

1. For two-bearing generators, remove the grease plugs from the bracket.

2. Clean the bracket or adapter, cap screws and screen assembly to remove all dust, dirt, and grease.

3. Inspect the cap screws for stripped threads and replace if defective.

4. Inspect the bracket or adapter for stripped threads, cracks, and burred or rough mating surfaces. (Figure 6-49 and 6-50.)



Figure 6-49



Figure 6-50

5. For two-bearing generators, inspect the bearing bore for burrs or wear. If the drive end bracket shows excessive bearing bore wear, it should be repaired or replaced.

MAIN STATOR INSPECTION

1. Clean dust and dirt from the stator frame and winding. (Figure 6-51.) (See section 5.)



Figure 6-51

2. Inspect the frame for stripped threads, cracks, burred mating surfaces, or other damage.

3. Inspect the stator for a loose, frayed, or burnt winding. Measure winding resistance and insulation resistance. (See section 8.) Repair or replace as necessary.

FRONT END BRACKET INSTALLATION

1.Install two guide pins (threaded rod can be used) into the generator side of the end bracket mounting holes. Align the guide pins with the holes in the generator frame and slide the bracket onto the frame. (Figure 6-52.) Install bracket mounting cap screws. (Figure 6-53.)

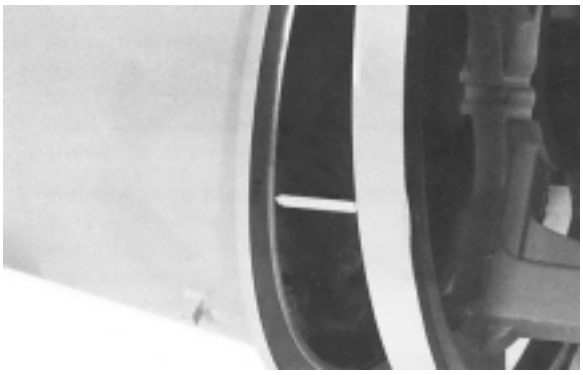

Figure 6-52

CAUTION: ON LARGE GENERATORS, A HOIST AND LIFTING STRAP SHOULD BE USED TO ASSIST IN THE FRONT END BRACKET INSTALLATION.

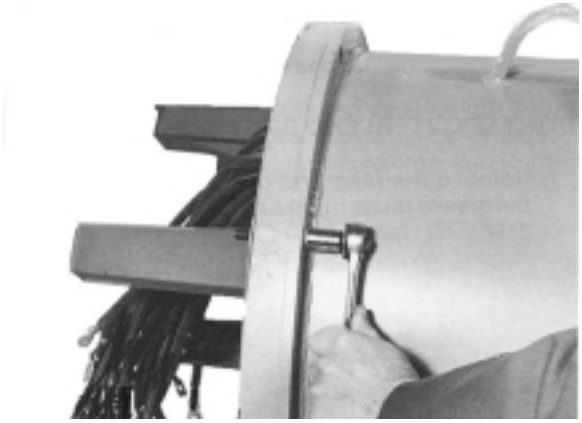

Figure 6-53

2. Remove the two guide pins and insert the remaining cap screws and torque to specifications given in section 12.

MAIN ROTOR INSTALLATION

1. Grease bearing cavity and bearing with Chevron SRI (or equivalent) grease.

2. Using a rotor lifting fixture and a suitable hoist, carefully install the rotor assembly into the main stator assembly through the drive end. (Figure 6-54.) Carefully feed the rotor leads through the front-end bracket shaft hole as the rotor is installed.

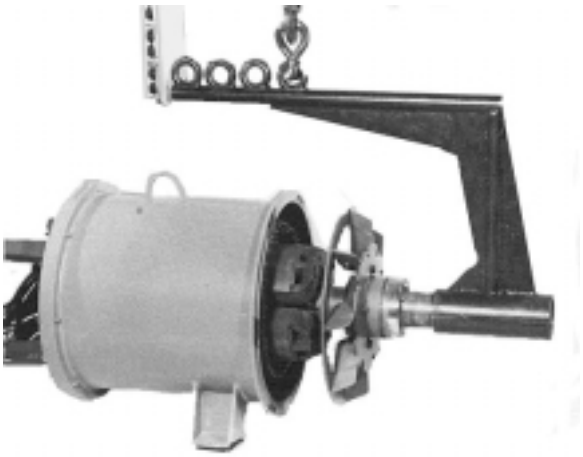

Figure 6-54

CAUTION:
SPECIAL CARE SHOULD BE TAKEN WHEN INSTALLINGTHE ROTOR ASSEMBLY. WINDING DAMAGE COULD RESULT IF THE ROTOR IS ALLOWED TO HIT THE MAIN STATOR.

WARNING
DO NOT APPLY ANY FORCE TO THE GENERATOR FAN FOR LIFTING OR ROTATING THE GENERATOR ROTOR. DISREGARDING THESE INSTRUCTIONS MAY CAUSE PERSONAL INJURY OR EQUIPMENT DAMAGE.

3. For single bearing generators, slide the SAE adapter over the fan and secure to the main stator and frame assembly with cap screws torqued per section 12. (Figure 6-55 and 6-56.) It may be necessary to raise the rotor assembly slightly to allow the mounting of the SAE adapter.

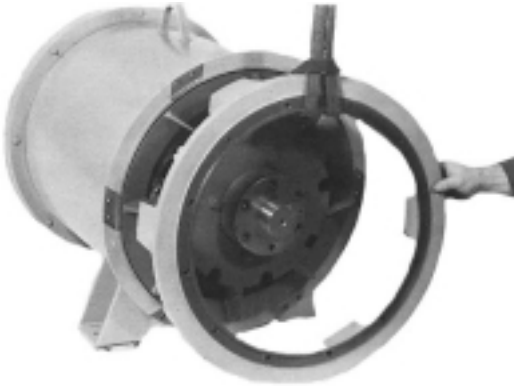

Figure 6-55



Figure 6-56

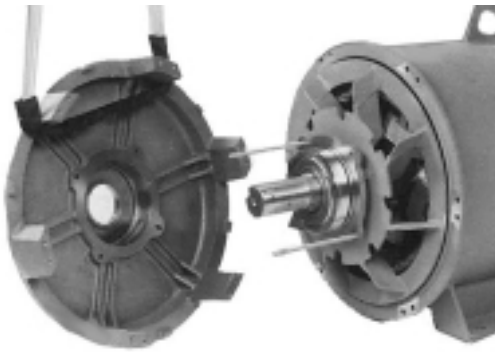

Figure 6-57

For two-bearing generators, insert two guide pins in the rear bearing lock holes. (Figure 6-57.) Fill the grease cavity of the drive end bracket 1/3 to 1/2 full of Chevron SRI (or equivalent) grease. Assemble all grease plugs in the bracket. Mount the bracket on the bearing and guide the bearing lock pins through the bracket holes. (Figure 6-58.)

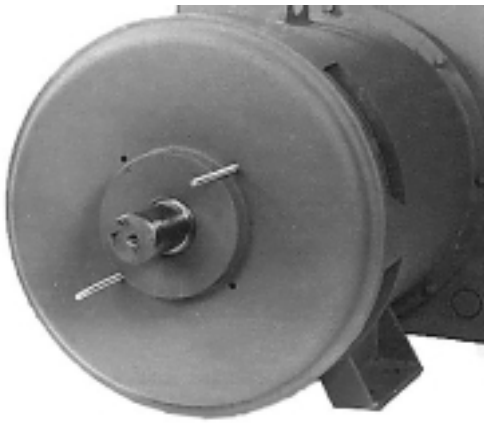

Figure 6-58

Align the drive end bracket and mount with the cap screws. (Figure 6-59.) Insert two cap screws with lock washers into the bearing lock and tighten. Remove the guide pins and replace with the remaining two cap screws with lock washers. Torque bearing cap screws to 25 lb.-ft (34 NM). Torque bracket mounting cap screws per specifications given in section 12.

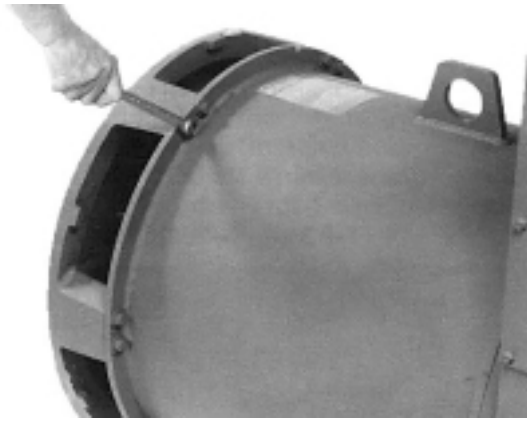

Figure 6-59

CAUTION:
ON LARGE GENERATORS, A HOIST AND LIFTING STRAP SHOULD BE USED TOASSIST IN THE DRIVE END BRACKET OR THE SAE ADAPTER ASSEMBLY.

4. For single bearing generators, insert a guide stud into the drive hub. Position all spacers (if any), then all drive discs, one at a time until all discs are installed. (Figure 6-61.)

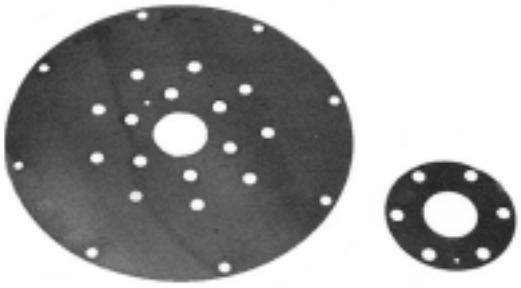

Figure 6-61

Make sure that all disc mounting holes at the inner and outer diameter are properly aligned. Secure the discs with the grade eight 5/8-18 cap screws and hardened washers. Torque to 192 ft-lb. (260 N-m). Torque the bolts in sequence according to Figure 6-62.

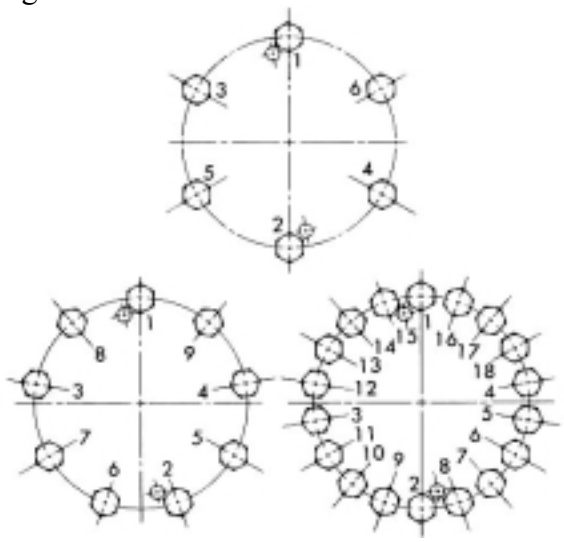

Figure 6-62

5. Install the outer bearing cap on the exciter end. (Figure 6-63.) Align holes in inner and outer bearing cap and install cap screws. Torque to 25 lb.-ft (34 N-M) (Figure 6-64.)

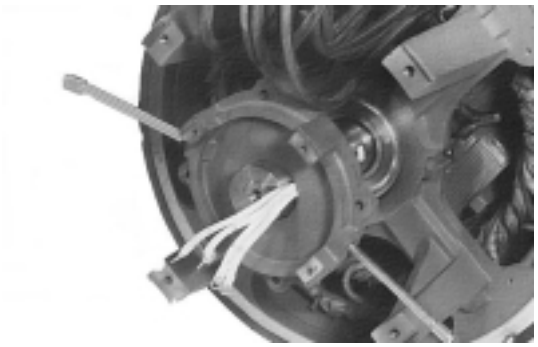

Figure 6-63

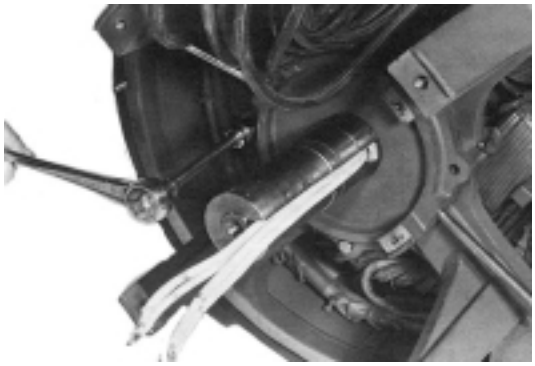

Figure 6-64

PMG INSTALLATION

1. Install inboard snap ring, where supplied, and loading spring on shaft. (Figure 6-65.)

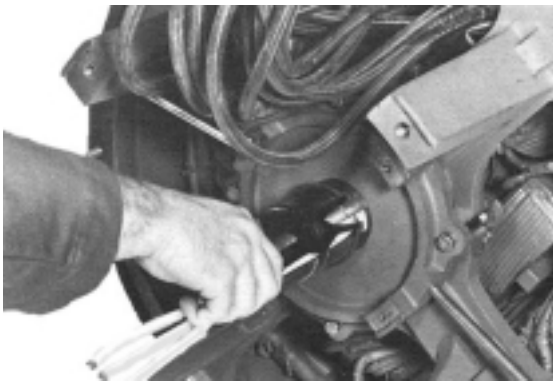

Figure 6-65

2. Slide PMG rotor onto shaft. (Figure 6-66.)

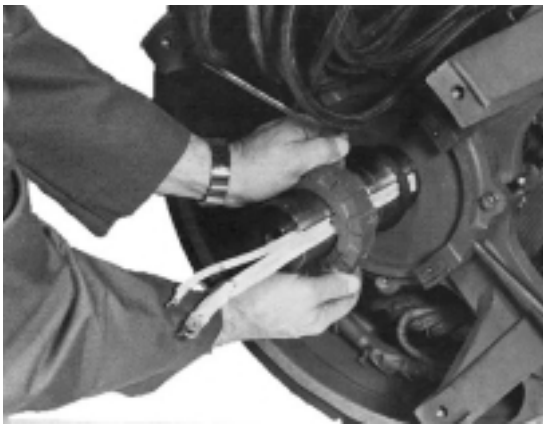

Figure 6-66

3. Install snap ring. (Figure 6-67.) Use a piece of pipe slightly larger than the shaft (2-3/4 inches) to push the rotor back against the loading spring until the snap ring seats in the slot. (Figure 6-68.)

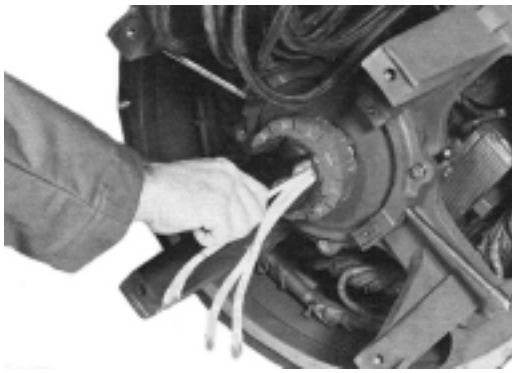

Figure 6-67

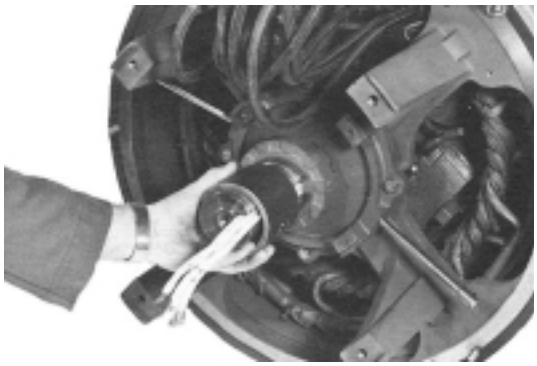

Figure 6-68

4. Install the PMG stator on its mounting pads, with the leads in the left (9:00 o'clock) inboard position, and secure with the four

mounting cap screws and Belleville washers. (Figure 6-69 and 6-72.)
Torque to 4 ft-lb. (5 N-M).



Figure 6-69

5. Route and secure PMG moving parts.

EXCITER INSTALLATION

1. Attach a wire to the main rotor leads and feed the wire through the armature bore and the lead hole in the aluminum standoff plate. On larger exciters, it will be helpful to install a guide pin in the end of the shaft to support the armature while fishing the rotor leads through. (Figure 6-70.)

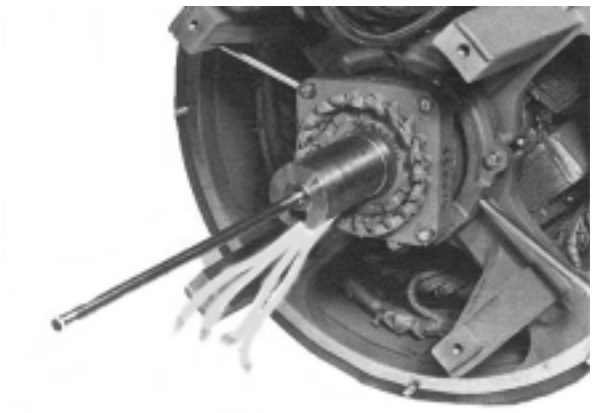

Figure 6-70

Align the key in the armature bore to the keyway in the shaft. Slide the armature on the shaft while feeding the main rotor leads through the lead hole in the aluminum standoff plate. (Figure 6-71.)

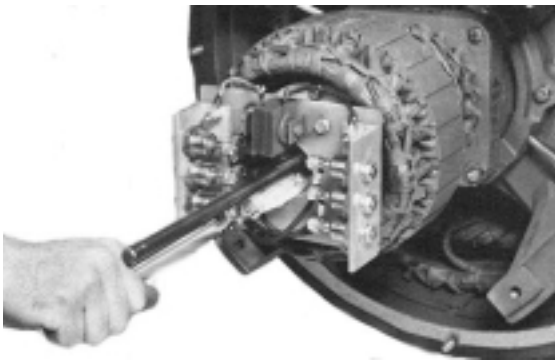

Figure 6-71

Insert the cap screw and Belleville washer (Figure 6-72.) through the mounting hole in the aluminum standoff plate and secure to the shaft (Figure 6-73). Tighten the cap screw until the armature seats on the shaft. Torque to 84 lb.-ft (114 N-M).



Figure 6-72

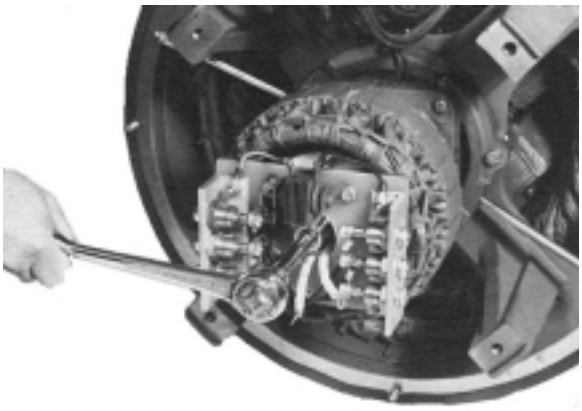

Figure 6-73

2. Observe the polarity markings and connect the main rotor leads to the rectifier

assembly. (Figure 6-74.) Torque the nuts to 4 ft-lb. (5.4 N-M).

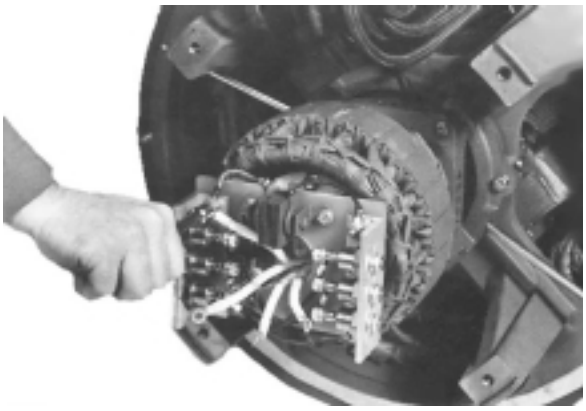

Figure 6-74

3. Position the exciter field leads at the left (9:o'clock) inboard position. Using a suitable lifting device, mount the exciter stator on the front e bracket mounting pads and align the mounting holes. (Figure 6-75.) Mount the cap screws with Belleville washers. (Figure 6-72.) Torque t cap screws to 60 ft-lb. (81 N-M). Route and secure the exciter stator leads away from any moving parts.

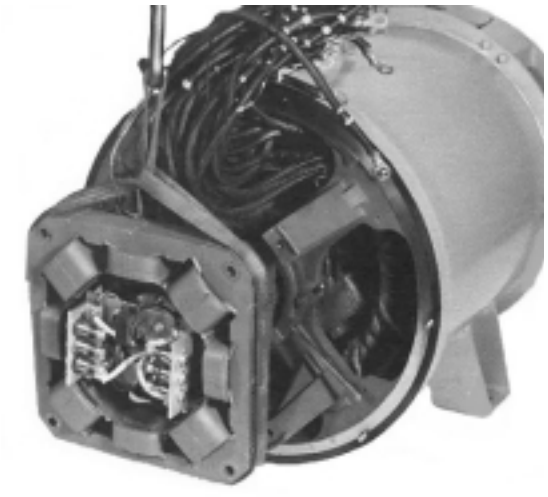

Figure 6-75

CONDUIT BOX INSTALLATION

1. Install the conduit box over the main stator leads (be sure the leads are in the upper compartment and secure with bolts and lock washers. (Fig 6-76 and 6-77.)

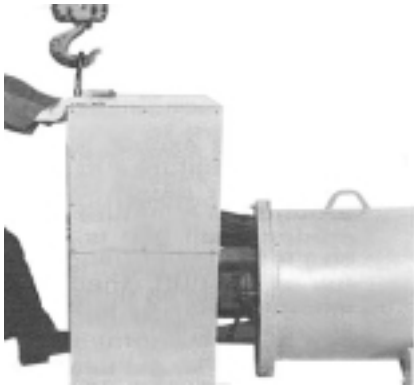

Figure 6-76



Figure 6-77

2. On generators with bus bar assemblies, reassemble main stator leads and insulating blocks to bus bars. (Figure 6-78.)

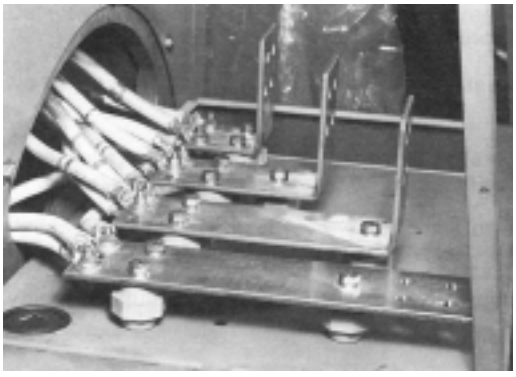

Figure 6-78

3. Reconnect exciter leads, PMG leads and other accessories according to the connection prints and markings installed before disassembly.

ASSEMBLY TO PRIME MOVER

1. Attach a suitable hoist to the generator lifting lugs, and move the generator until the generator foot mounting holes are aligned with the base and slightly above.

2. For single bearing generators, if the screen assembly is mounted on the adapter, remove the mounting bolts and remove the screen. (Figure 6-79.)

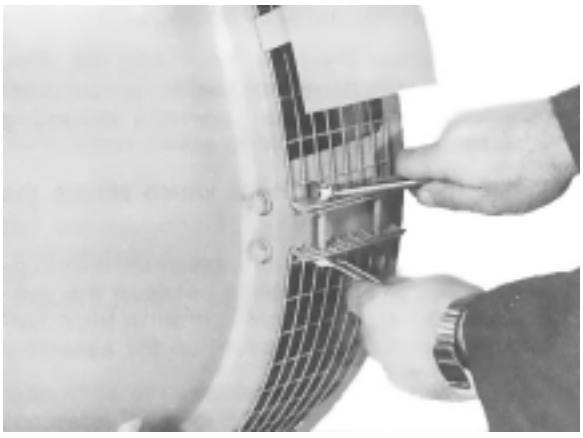

Figure 6-79

(NOTE: Do not remove the drip cover from the screen assembly if so equipped.) Insert two guide pins in the flywheel and two in the flywheel housing. Adjust the generator position until the drive discs are piloted in the flywheel. Remove the guide pins and secure the discs with Grade 8 place bolts and hardened washers or Grade 8 cap screws and heavy series lockwashers.

Torque per specifications given in section 12.

Position the generator so that the SAE adapter mates with the flywheel housing.

WARNING
DO NOT APPLY ANY FORCE TO THE GENERATOR FAN FOR LIFTING OR ROTATING THE GENERATOR ROTOR. DISREGARDING THESE INSTRUCTIONS MAY CAUSE PERSONAL INJUY OR EQUIPMENT DAMAGE.

CAUTION:
DO NOT FORCE THE ALIGNMENT OFTHE UNITS. SHIFT THE GENERATOR FROM SIDE TO SIDE OR RAISE OR LOWER WITH A LIFTING DEVICE AS NECESSARY.

It may be necessary to use shims under the mounting feet of either the generator or the prime mover to obtain proper alignment. Use the same shims as removed under disassembly or proceed as follows: Using the extreme bottom four cap screws, mount the SAE adapter to the flywheel housing.

With a .0015 to .002 inch feeler gauge at the extreme top of the adapter to flywheel housing fit, raise the generator or lower the prime mover until the gauge is snug. Relieve just enough to release the feeler gauge and torque the remaining SAE adapter cap screws to the flywheel housing.

Mount the screen assembly and tighten the mounting bolts.

For two-bearing generators, align the coupling halves or sheaves between the generator and the prime mover by adding shims under the feet.

3. Shim under the generator feet for proper support, ensuring that the generator mounting surfaces are level.

4. Install the mounting bolts that secure the generator to the base.

5. For two bearing generators, assemble the coupling halves or sheave belts between the generator and the prime mover. (Follow the coupling manufacturer's instructions for assembly and alignment.)

6. Connect all conduits and ducting to the conduit box.

7. Connect all external wiring to the generator inside the conduit box.

8. Check the exciter air gap (the gap between exciter armature and stator) by inserting a .010 inch feeler gauge in the gap and rotating around the armature diameter to ensure the minimum air gap is available. (See Figure 80.) If the feeler gauge cannot be rotated full revolution, then check for a "cocked" exciter stator or loose stator mounting screws.

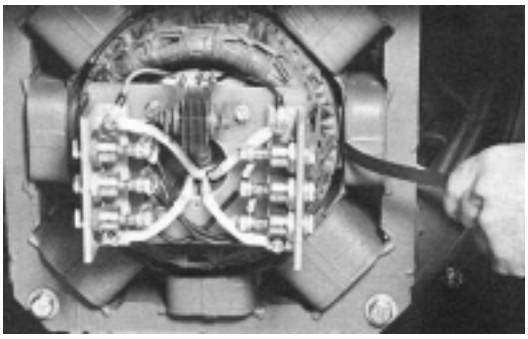

Figure 6-80

NOTE: On single bearing units, the exciter air gap cannot be checked properly until the generator is mounted to the prime mover.

9. Install the conduit box covers.

TROUBLESHOOTING

INTRODUCTION

This section is intended to suggest a systematic approach to locating and correcting generator or regulator malfunctions. The sections are arranged according to the symptoms of the problem. The steps in each section have been arranged in an attempt to do the easy checks first then to prevent further damage when troubleshooting a disabled machine.

The first and perhaps most important step of troubleshooting should be to gather as much information as possible from personnel who may have been present during the failure. Information on how long the generator had been running, what loads were on the line, weather conditions, what protective equipment operated, etc., can help isolate the problem.

Always make a thorough visual inspection to check for any obvious problems before attempting to run the generator.

WARNING
HIGH VOLTAGES CAN BE PRESENT AT THE GENERATOR AND REGULATOR TERMINALS. HIGH RESIDUAL VOLTAGES CAN BE PRESENT EVEN WITH THE REGULATORDISCONNECTED OR ITS FUSES REMOVED. SOME EQUIPMENT (SUCH AS SPACEHEATERS) MAY BE ENERGIZED WHEN THE GENERATOR IS OFF. TOOLS, EQUIPMENT, CLOTHING, AND YOUR BODY MUST BE KEPT CLEAR OF ROTATING PARTS AND ELECTRICAL CONNECTIONS.

SPECIAL CAUTION MUST BE TAKEN DURING TROUBLESHOOTING SINCE PROTECTIVE COVERS AND SAFETY DEVICES MAY BE DISABLED TO GAIN ACCESS AND MAKE TESTS.

BE CAREFUL. SERIOUS PERSONAL INJURY OR DEATH CAN RESULT FROM THESE HAZARDS. CONSULT QUALIFIED PERSONNEL WITH ANY QUESTIONS.

SYMPTOM:		
NO VOLTAGE OR RESIDUAL VOLTAGE	Regulator Fuse Blown Check fuse with ohmmeter.	Replace bad fuse.
	Voltmeter Off	Check to be sure meter phase selector switch is not in the off position.
	Defective Voltmeter	Verify proper operation of panel meter with another meter that is known to be accurate.
	Incorrect Connections	Verify generator connections.
	Defective Connections/Wiring	Inspect all wiring for grounds, open circuits & short circuits.
	No Regulator Input	Measure voltage at regulator input (PMG output)
	Defective Diodes, Surge Suppressor	Test generator with constant excitation (12 volt battery test) refer or Generator Windings
	Voltage Regulator Protective Shutdown Circuits are Operating	Correct problem and adjust regulator. Refer to regulator manual.
	Voltage Regulator Inoperative	Adjust or replace regulator. Refer to regulator manual.

LOW VOLTAGE - NO LOAD	Under speed Operation	Check speed using tachometers and/or frequency meters.
	Defective Voltmeter	Verify operation of panel meter with another meter that is known to be accurate.
	Residual Voltage	Disconnect Fl and F2 leads at the voltage regulator. If voltage goes down continue on to next step, if voltage does not change refer to troubleshooting for symptoms of "No Voltage - No Residual Voltage".
	Incorrect Generator Connections	Verify generator connections refer to drawings supplied V generator set and section 3.
	Defective Connections / Wiring	Inspect all wiring for grounds, open circuits, short circuits, and loose and dirty connections.
	Regulator Adjustments	Adjust regulator. Refer to regulator manual. Check exciter field volts.
	Defective Diodes, Surge Suppressor, Generator Windings	Test generator with constant excitation (12 volt battery test)
	Voltage Regulator not Operating	Adjust or replace regulator. Refer to regulator manual. Properly

LOW VOLTAGE WHEN LOAD IS APPLIED	Overload	Measure amps and verify that the load does not exceed nameplate rating of the generator
	Defective Ammeter	Verify operation of ammeter by using a separate meter known to be accurate
	Droop Circuit	If the generator set is equipped for paralleling, some voltage droop is normal as load increases. Refer to the regulator instruction manual
	Continue troubleshooting for symptoms “Generator Produces Low Voltage - No Load”.	Continue troubleshooting for symptoms “Generator Produces Low Voltage - No Load”.
HIGH VOLTAGE	Defective Voltmeter	Verify operation of panel meter with another meter that is known to be accurate
	Incorrect Operating Speed	Verify speed with tachometer or frequency meter.
	Incorrect Connections	Verify generator connections Refer to drawings supplied with generator set
	Defective Connections / Wiring	Inspect all wiring for grounds, open circuits, and short circuits.
	Regulator Adjustments	Adjust regulator. Refer to regulator manual
	Diode Polarity Incorrect	Check diodes, verify proper diodes are installed and polarity is correct.
	Voltage Regulator not Operating	Adjust or replace regulator. Refer to regulator instruction manual.

VOLTAGE IS FLUCTUATING	Incorrect Speed	Verify speed with tachometer or frequency meter.
	Unstable Speed	Verify governor stability.
	Voltage Regulator Stability	Adjust regulator stability. Refer to regulator manual.
	Defective / Loose Connections	Inspect all wiring for loose or dirty connections.
	Defective Diodes, Surge Suppressor or Generator Windings	Test generator with constant excitation (12-volt battery test).
	Remote Voltage Adjust	Check operation. Refer to regulator manual.
	Defective Regulator	Replace regulator. Refer to regulator manual.
OPERATES SATISFACTORILY WHEN COLD, BUT SHUTS DOWN WHEN WARM	Regulator Shutdown on Over Temperature	Correct cooling problems. Refer to regulator manual.
BUILDS VOLTAGE FROM STARTUP,THEN GOES TO LOW (RESIDUAL) VOLTAGE	Regulator Protective Circuit is Operating	Check indicators on regulator. Correct problems and adjust as required. Refer to regulator manual.
EQUIPMENT RUNS NORMALLY ON UTILITY POWER, BUT WILL NOT RUN ON GENERATOR SET	Voltage Waveform is Distorted	Analyze load. Excessive SCR (Thyristor) loading will cause distortion. Some equipment may be sensitive to distorted waveforms. Refer to Katolight.

GENERATOR TESTING

VISUAL INSPECTION

Whenever testing and troubleshooting a generator set, it is always a good practice to make a thorough visual inspection. Remove covers and look for any obvious problems. Burnt windings, broken connectors, leads, mounting brackets, etc., can usually be identified. Look for any loose or frayed insulation, loose or dirty connections, broken wires. Be sure all wiring is clear of rotating parts.

Verify that the generator is connected for the voltage required this is especially important on new installations.

Check for any foreign objects, loose nuts, bolts, and electrical connectors. Clear paper, leaves, building materials, etc., that could be sucked into the generator. (Generators are air-cooled. Air enters the lower portion of the conduit box.) Check the air gap for clearance or obstructions (main generator and exciter).

If possible, rotate the generator rotor by hand to be sure it turns freely.

If serious problems can be identified before attempting to operate the machine, additional damage can be avoided.

CONSTANT EXCITATION (12V BATTERY) TEST

THEORY: The generator output voltage is dependent on generator speed, generator design, load, and exciter input current. If the generator speed and exciter input are known, the output voltage at no load can be measured and compared to the design value. Problems can be isolated to either the generator or regulator system by using this test.

TEST PROCEDURE:

1. Shut the generator set down.

2. Connect a voltmeter to the generator output.

3. Disconnect the Fl and F2 leads at the regulator.

4. Connect a 12-volt battery capable of supplying 1 amp to the Fl and F2 leads. Fl is plus **(+),** F2 is minus (—).

CAUTION: Beware of arcing when connecting leads. Stay clear of battery vents. Escaping hydrogen gas can explode. If hazardous conditions exist - use a suitable switch to connect or disconnect the battery.

5. With no load on the generator, (main breakers open) run generator at rated speed.

6. Measure the generator output voltage.

7. Shut generator down.

8. Disconnect battery (see Caution - Step 3).

9. Compare voltage reading with value shown in section 12.

Conclusion: If voltage readings are normal, the main generator and exciter are operating properly. Troubleshooting should continue with the regulator. If readings are not normal the problem is in the generator. Continue testing diodes, surge suppressor, windings.

MEASURING VOLTAGES

When testing the generator and regulator, the most frequent (and usually easiest) measurement will be a voltage. The generator will need to be running at rated speed and may have some of the protective guards and covers removed. BE CAREFUL. Keep yourself and your test leads out of the way. It is best to shut the unit down when connecting meters. When using alligator clips or push on terminals, be sure the leads re supported so vibration does not shake them loose when running the generator set.

See figure 8-1 for measurement points and expected meter range settings.
When in doubt, start with a higher range and work down.
Consult meter instruction manual to verify its operation and limitations.

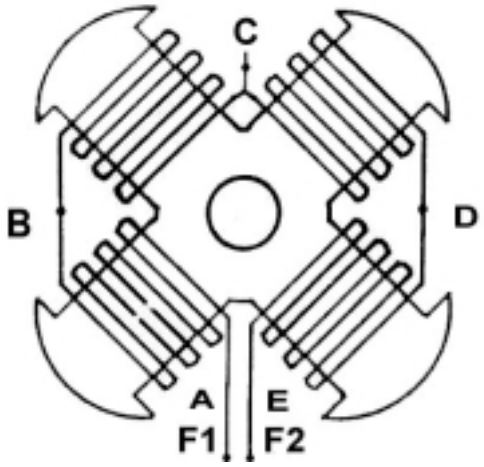

Figure 8-1

TYPICAL VOLTAGE MEASUREMENTS

Voltage Measurement	Test Point	Meter/Range Selection Requirement
Generator Output Voltage	Output "T" leads or bus bars, also main circuit breaker "line" side.	System voltage - volts AC See generator nameplate and connection diagram.
Regulator Output (Exciter Stator Input)	Fl and F2 terminals at the regulator.	200 volts D.C. range. Fl is plus (+), F2 if minus (—
Regulator Sensing	El, E2, E3 terminals at the Voltage the regulator.	Usually the same as the system voltage (generator output volts). However, in some cases, sensing taken from winding center taps or instrument potential transformers. Maximum 600 volts AC **Example:** Center tap of 480-volt system would give 240 volts El, E2, or E3. **Example:** A 4160-volt system must use a transformer to step voltage down below 600 volts. See the connection diagram supplied with generator set.
Regulator Input Volts (PMG Output Volts)	"PMG" leads at the regulator or capacitor.	200-240 VAC 300 Hz @ 1800 rpm 180-220 VAC 250 Hz @ 1500 rpm

CURRENT (AMP) MEASUREMENTS

Current measurement (AC) can be easily taken with a clamp on type meter.
NOTE: Most clamp type ammeters will not measure D.C.

When measuring generator output current, be sure the clamp is around all cables for each phase. If the physical size of the conductors or the capacity of the meters will not permit all cables to be measured at once, Each one can be measured individually. Add the individual readings together to get the total. Compare readings to the generator nameplate (nameplate ratings are always given per phase).

Amperage should never exceed the nameplate rating when running the intended load. (Amperage may go above nameplate momentarily when starting large motors.) When measuring exciter field amps (Fl and F2 leads) a D.C. meter is required. The maximum field current under full regulator forcing is 6.5 amps D.C.

MEASURING RESISTANCE

The generator windings can be measured and compared to the values shown in the service specifications.

Main Stator

The main stator winding resistance is very low. A meter capable of readings in the milliohm range would be required. However, a standard V.O.M. can be used to check for continuity, shorts, or grounds.

Example: With leads disconnected, a measurement from T1 to T4 should be very low (continuity most V.O.M's). Measured from T1 orT4 to any other lead should be infinite. Measure from the 'T' lead the generator frame to check for grounds (reading should be infinite).

Normal full load reading is approximately 3 amps.

The exciter stator resistance is measured by disconnecting the Fl and F2 leads at the regulator. Measure the resistance between the leads (this value is 22-24 ohms on standard generators). Measure from the leads to the frame to check for grounds.

Note markings and disconnect the main rotor leads (Fl leads and F2 leads) from the rectifier assembly. Measure the resistance of the main rotor winding. Compare reading to value shown in service specification section 12. Measure from the leads to the exciter-mounting bolt to check for grounds.

Exciter Rotor

Disconnect the exciter rotor leads at the diodes (leave leads disconnected if proceeding to check diodes). Measure resistance between phases. Compare value to service specification section 12. Measure from the leads to the exciter-mounting bolt to check for grounds.

TESTING DIODES (RECTIFIERS)

Diodes perform the function of an "electrical check valve". They conduct in one direction only and are used to "rectify" ac current into dc current. To test, measure the resistance first in one direction and then reverse the leads and test in the other direction. The reading should be high in the reverse direction and low in the forward direction. A shorted diode will read low in both directions. An open diode will read high in both directions.

NOTES:
1. Two different polarities of diodes are used. The only difference is in the way the device is mechanically placed in the case. When changing diode, be sure the correct polarity is used.
Refer to section 6 figure 6-34.

2. Some meters do not have enough voltage output from their internal batteries to turn the diode on (about 0.6 volts is required), and the voltage can change with different

range settings. Consult the instruction manual for your meter.
3. Polarities supplied by the meters internal battery may or may not correspond to the (+) (—) markings on the meter.

INSULATION RESISTANCE - *GENERAL*

Insulation resistance is a measurement of the integrity of the insulating materials that separate the electrical windings from the generators steel core. This resistance can degrade over time or due to contaminants (dust, dirt, oil, grease, and especially moisture). Most winding failures are due to a breakdown in the insulation system. In many cases, low insulation resistance is caused by moisture collected when the generator is shut down. The problem can be corrected simply by drying out the windings. Section 5.

Normally the resistance of the insulation system is on the order of millions of ohms. It is measured with a device called a “megger” which is a megohm meter (Meg is for million) and a power supply. The power supply voltage varies, but the most common is 500 volts. A megger voltage over 500 is not recommended except for measuring medium voltage (2400/4160) stators only.

CAUTION: First disconnect any electronic components, regulators, diodes, surge protectors, protective relays, etc., will be destroyed if subjected to the high megger voltages.

To measure insulation resistance, connect the red or positive megger lead to the leads for the winding to be tested, connect the back or negative megger lead to the generator frame. Be sure the leads of the part being tested are not touching any metal parts of the generator. (If the neutral is grounded, it must be disconnected.) Take megger reading (refer to the manual for the megger).

INSULATION RESISTANCE - MAIN STATOR

CAUTION: Be sure the regulator, and any other electronic components, metering, protective relays, etc., are disconnected before meggering. High megger voltages will destroy these parts. All stator leads must be isolated from ground and connected together (on most systems with grounded neutrals - the neutral can be isolated from ground and used as a test point). Connect the positive megger lead to the main stator leads. Connect the negative megger lead to the generator grounding stud. Take the megohm reading (refer to instructions for the megger).

GENERATOR TESTING

The minimum acceptable value can be calculated using the following formula.
Minimum Insulation Resistance = Gen. Voltage + 1 (Megohms) / 1000
Example:
For a 480 volt generator
480 + 1 = 1.48 Megohms
If the reading is below the recommended value, the winding must be dried out or repaired.

INSULATION RESISTANCE - MAIN ROTOR

Disconnect the main rotor leads from the diode bridge on the exciter rotor. Connect the leads together with the positive megger lead. Connect the negative megger lead to a good ground on the rotor assembly such as the exciter mounting bolt. Take the megohm

reading (refer to instructions for the megger).
The minimum acceptable value is 1.5 megohms.

If the reading is low, the winding must be dried out or repaired.

INSULATION RESISTANCE - EXCITER STATOR

Disconnect the exciter leads Fl and F2 from the regulator. Never subject the regulator to a megger. Connect Fl and F2 together with the positive megger lead. Connect the negative megger lead to the ground stud. Take the megohm reading (refer to instructions for the megger).

The minimum value is 1.5 megohms.

If the reading is low, the winding must be dried out or repaired.

INSULATION RESISTANCE - EXCITER ROTOR

Disconnect the exciter rotor windings (6 leads from the diodes). Connect all leads together with the positive megger lead. Connect he negative megger lead to a good ground on the rotor assembly such as the mounting bolt. Take the megohm reading (refer to the instructions for the megger).

The minimum acceptable value is 1.5 megohms.

If the reading is low, the winding must be dried out or repaired.

MAIN ROTOR FIELD AC IMPEDANCE TEST

THEORY: The main rotor resistance can be measured with a very accurate meter that is able to measure low (1 ohm) resistance but it is difficult to determine if there are turn to turn shorts in the field pole windings. One shorted turn would only change a resistance reading on the order of one half of one percent.

The ac impedance test measures the impedance (inductance and resistance) of the field pole coils. Shorted turns in the field pole windings change the coil inductance to a much greater degree than the resistance.

PROCEDURE:

Step 1: The rotor must be supported on a non-magnetic surface such as a wooden skid. Do not use a steel table that would create a magnetic “short circuit” between the poles.

Step 2: Apply 120 volts ac to disconnected main rotor leads Fl and F2.

Step 3: Measure and record voltages pole. Between points “A” and “C”, “C” and “D”, “D” and “E” across each “B”, “B” and (Figure 8-1).

Step 4: The voltage readings should balance within one volt.

RESULTS: If the ac voltages are not balanced (30v ± lv ac with 120v ac input) across each pole, the winding has shorted turns and should be rewound.

Refer to Katolight for further information.

MAGNAMAX EXPLODED VIEW

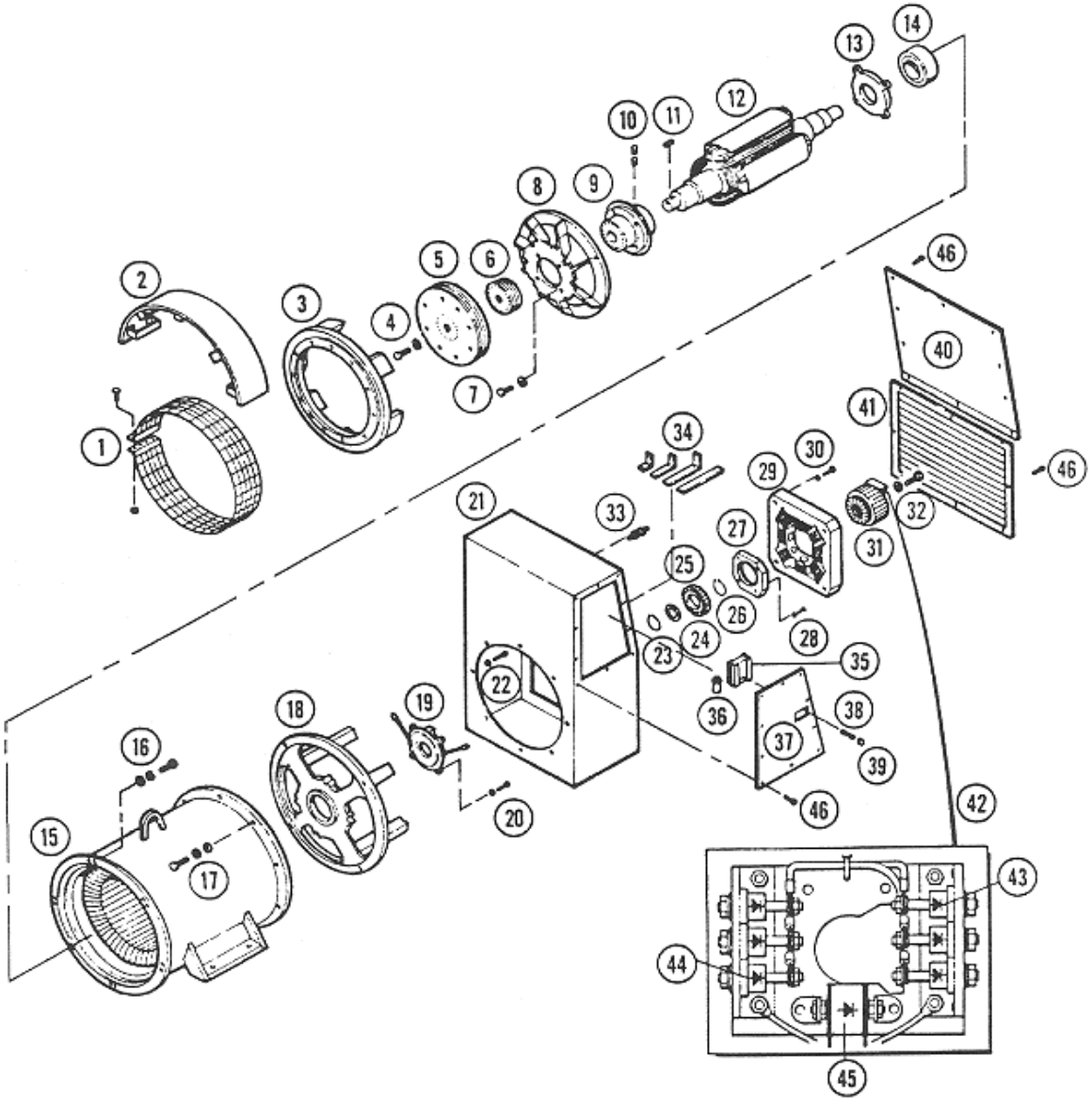

TABLE 9-1 *PARTS LIST*
NOTE: The parts in this list are subject to change, model number and serial number must accompany any parts order or inquiry.

TABLE 9-1 PARTS LIST NOTE: The parts in this list are subject to change, model number and serial number must accompany any parts order or inquiry.							
Item	**Part Description**	**430 Frame Series**		**570 Frame Series**		**740 Frame Series**	
		Part Number	**Qty.**	**Part Number**	**Qty.**	**Part Number**	**Qty.**
1	Screen Assembly						
	Screen	B-525565-1	1	B-525565-2	1	B-525565-3	1
	Screen Mounting Bolt Screen	A-9646-200	2	A-9646-200	2	A-9646-200	2
	Mounting Nut	A-7551-18	2	A-7551-18	2	A-7551-18	2
2	Drip Cover assembly	B-525566-1	1	B-525566-2	2	B-525566-3	1
3	Adapter						
	#3Adapter	B-525512A	1				
	#2Adapter	B-525512B	1				
	#1 Adapter	B-525513A	1	B-525618A	1		
	#1/2 Adapter	B-525514B	1	B-525616A	1		
	#0 Adapter	B-525514A	1	B-525603A	1	B-525720A	1
	#00 Adapter (#18 Disc)			B-525617A	1	B-525721A	1
	#00 Adapter (#21 Disc)			B-526228A	1	B-52572 1A	1
4	Disc Mounting Fasteners						
	Cap screw for #11-1/2	A-9674-200	6				
	Cap screw for #14	A-9674-150	6	A-9674-150	9		
	Cap screw for #18	A-9674-150	6	A-9674-150	9	A-9674-200	18
	Cap screw for #21					A-9674-150	18
	Cap screw for Delco	A-9674-150	6	A-9674-150	9	A-9674-200	18
	Hardened Washer	A-9667-1	6	A-9667-1	9	A-9667-1	18
5	Drive Discs						
	#11-1/2 Disc	A-525506	5	—	—	—	—
	#14 Disc	A-525508	5	A-525508	5	—	—
	#18 Disc	B-525975	4	A-525579	5	A-525579	10
	#21 Disc	—	—	A-525580	5	A-525580	10
	Delco Disc (17.75” 0.0.)	A-525507	5	A-525507	5	A-525507	10
6	Spacers						
	For #11-1/2 Disc	A-525567	14	—	—	—	—
	For #14 Disc	A-525567	5	A-525503	6	—	—
	For#18 Disc	—	—	—	—	A-525503	10
	For #21 Disc	—	—	—	—	—	—
	For Delco Disc	—	—	A-525503	1	A-525503	12
7	Fan Mounting Fasteners						
	Cap screw	A-9626-150	4	A-9626-150	8	A-9626-1 50	8
	Cap screw (2 Brg. Only)	A-9626-150	4	A-9626-200	8	A-9626-200	8
	Belleville Washer	A-9682-1	4	A-9682-1	8	A-9682-1	8
8	Fan	B-525510A	1	B-525604A	1	B-525719A	1

TABLE 9-1 PARTS LIST
NOTE: The parts in this list are subject to change, model number and serial number must accompany any parts order or inquiry.

Item	Part Description	430 Frame Series		570 Frame Series		740 Frame Series	
		Part Number	Qty.	Part Number	Qty.	Part Number	Qty.
9	Hub						
	Drive Hub [Sgl Brg. Only)	B-525509A	1	B-525606A	1	B-525726A	1
	Fan Hub (2 Brg. Only)	A-525568A	1	B-525694A	1	B-525750A	1
10	Drive Hub Set Screws		—	A-9675-50	2	A-9675-50	2
11	Drive Hub Key	A-25658-30	1	A-25658-30	1	A-25658-46	1
12	Main Rotor Assembly with Windings	REFER TO FACTORY					
13	Front Bearing Cap	B-525519A	1	B-525613A	1	B-525743A	1
14	Front Ball Bearing	A-7812R-70	1	A-7812R-80	1	A-7812R-110	1
15	Main Body Assembly	REFER TO FACTORY					
16	Adapter Mounting Fasteners	-					
	Cap screw	A-9680-125	12	A-9680-125	16	A-9626-150	16
	Lock Washer	A-7653-3	12	A-7653-3	16	A-7653-4	16
	Flat Washer	A-7656-8	16	A-7656-8	16	A-9667-1	16
17	Bracket Mounting Fasteners	-		-	-	-	-
	Cap screw	A-9680-1 25	8	A-9680-125	8	A-9626-150	8
	Lock Washer	A-7653-3	8	A-7653-3	8	A-7653-4	8
	Flat Washer	A-7656-8	8	A-7656-8	8	A-9667-1	8
18	Front Bracket	B-525518A	1	B-525605A	1	B-525739A	1
19	PMG Bearing Cap	B-525520A	1	B-525612A	1	B-525742A	1
20	Bearing Cap Fasteners	-	-	-	-	-	-
	Cap screw	A-9680-350	4	A-9680-400	4	A-9680-450	4
	Lock Washer	A-7653-3	4	A-7653-3	4	A-7653-3	4
21	Conduit Box	D-525673	1	D-525680	1	D-525771	1
22	Conduit Box Mtg. Fasteners						
	Cap screw	A-9680-75	8	A-9680-75	8	A-9626-75	8
	Lock Washer	A-7675-2	8	A-7675-2	8	A-7675-4	8
23	Snap Ring - Inner	A-7610-275	1			—	—
24	Loading Spring	A-7661-45	1	A-7661-45	1	A-7661-45	1
25	PMG Rotor	A-526816	1	A-526816	1	A-526816	1
26	Snap Ring-Outer	A-7610-275	1	A-7610-275	1	A-7610-275	1
27	PMG Stator	A-525548-1	1	A-525548-1	1	A-525548A-1	1
28	PMG Stator Mtg. Fasteners						
	Cap screw	A-9812-200	4	A-9812-200	4	A-9812-200	4
	Belleville Washer	A-9682-2	4	A-9682-2	4	A-9682-2	4
29	Exciter Stator	A-400N-200A	I	A-400N-300A	I	See Table 9-2	1
30	Exciter Stator Fasteners	-	-	-	-	-	-
	Cap Screw	A-9626-300	4	A-9626-400	4	See Table 9-2	4
	Belleville Washer	A-9682-1	4	A-9682-1	4	A-9682-1	4
31	Exciter Rotor Assy. (IncI. 42)	-	-	-	-	See Table 9-2	
	430 Frame - All	B-526483-2	I	—	—		
	570 Frame - Low Voltage	—	—	B-526483-3	1		
	570 Frame - Med. Voltage	—	—	B-526483-10	1		

TABLE 9-1 PARTS LIST
NOTE: The parts in this list are subject to change, model number and serial number must accompany any parts order or inquiry.

Item	Part Description	430 Frame Series		570 Frame Series		740 Frame Series	
		Part Number	Qty.	Part Number	Qty.	Part Number	Qty.
32	Exciter Rotor Fastener	-	-	-	-	-	-
	Cap screw	A-9670A-200	1	A-9670A-200	1	A-9670A-200	1
	Belleville Washer	A-9682-1	1	A-9682-1	1	A-9682-1	1
33	Grounding Stud Assembly	-	-	-	-	-	-
	Stud	A-26937-300	1	A-26937-300	1	A-525574-400	I
	Washer	A-9787-1	2	A-9787-1	2	A-9787-3	2
	Nut	A-9786-1	1	A-9786-1	2	A-9786-3	2
34	Bus Bar Assembly	REFER TO FACTORY					
35	DVR2000 AVR	D-526352	1	D-526352	1	D-526352	1
36	Capacitor (DVR2000)	A-66377-45	1	A-66377-45	1	A-66377-45	1
37	Side Panels Blank	B-525679A	1	B-525686A	1	B-525707A	1
	Machined for (DVR2000)	B-525679AE	I	B-525686AN	1	B-525707W	1
38	Fuse	A-525698-1	1	A-525698-1	1	A-525698-1	1
39	Fuse Holder Cap	A-525893	1	A-525893	1	A-525893	1
40	Solid Cover	B-525676	1	B-525687	1	B-525706	1
41	Louvered Cover	C-525562	1	C-525647	1	C-525670	1
42	Exciter Rectifier Assy. (Includes 43,44,45)	B-525528A	1	B-525528A	1	B-525528B	1
43	Diode Standard Polarity	B-525570-1	3	B-525570-1	3	B-525570-2	3
44	Diode Reverse Polarity	B-525571-1	3	B-525571-1	3	B525571-2	3
45	Surge Suppressor	B-526482-1	1	B-526482-1	1	B-526482-2	1
46	Cover Mtg. Screws	A-9646-75	33	A-9646-75	33	A-9646-75	33

TABLE 9-2 : EXCITER ASSEMBLIES

Frame	Type	Insulation	Exciter Stator	Exciter Stator Mtg. Cap screws	Exciter Rotor
572	RSL	Standard	A-400N-250A	A-9626-350	B-526483-24
573.574	RSL	Standard	A-400N-300A	A-9626-400	B-526483-3
572	RSL	VPI	A-400N-250AA	A-9626-350	B-526483-25
573.574	RSL	VPI	A-400N-300AA	A-9626-400	B-526483-9
573,574	FSM	VPI	A-400N-300AA	A-9626-400	B-526483-10
741, 742	RSL	Standard	A-400N-500A	A-9626-600	B-526483-5
741, 742, 743	RSL	VPI	A-400N-500A	A-9626-600	B-526483-11
741, 742	FSM	VPI	A-400N-500A	A-9626-600	B-526483-11
743	FSM	VPI	A-400N-600A	A-9626-700	B-526483-12
744	RSL	VPI	A-400N-600A	A-9626-700	B-526483-12
744	FSL	VPI	A-400N-650A	A-9626-750	B-526483-13

STANDARD TOOLS

The MagnaMAX generator is assembled with American standard SAE hardware. All fasteners should be properly torqued. (See section 12). Torque wrenches ranging from 25 in-lb. through 200 ft-lb. should be available.

Electrical test equipment should include a voltmeter or multimeter (VOM), clamp on ammeter, accurate frequency meter or tachometer, and a megohmmeter. See section Generator Testing for more information.

SPECIAL TOOLS

In addition to the standard tools mentioned above, the following special tools would facilitate removal and installation of large and/or special parts. These tools can be obtained from the Katolight parts department.

Exciter stator lifting fixture (Figure 10-1).



Figure 10-1

In cases where the exciter stator is to be serviced without removing the generator conduit box this fixture can be used with overhead rigging to remove and reinstall the exciter stator.

Exciter rotor puller bolt (Figure 10-2). The exciter rotor has a built in pulling system. With the use of this bolt, the rotor can be easily removed from the shaft without damage to the winding.



Figure 10-2

The PMG rotor is installed to the generator shaft with a snap ring.

The nominal shaft diameter is 2-3/4 inches and the ring must be spread approximately 3/4 inches for removal. To install the snap ring, use a piece of pipe with a 2-3/4 inch I.D. (Figure 10-4). Push the PMG rotor and snap ring onto the shaft until the ring snaps into the groove.



Figure 10-4

Rotor lifting fixture (Figure 10-5). The main generator rotor is heavy (approximately 1/2 the weight of the generator) and difficult to handle. The proper fixture should be used whenever removing or installing the main rotor into the main stator. Without proper care and equipment, the windings can be easily damaged.



Figure 10-5

MISCELLANEOUS

A selection of wiring devices such as electric connectors, tape, cable ties, crimping and stripping tools, etc., should also be a part of the generator service tool kit. The standard regulator uses flat 1/4 inch female insulated terminals for AWG #14 wire.

PREPARATION FOR SHIPMENT OR EXTENDED STORAGE

SHIPPING INSTRUCTIONS

Shipping and handling will be much easier if the generator is fastened to a suitable shipping skid that will allow handling by a forklift. The skid should extend beyond the generator in all directions. If the original skid is available it should be used. Katolight will supply shipping skid drawings upon request.

Overseas shipping may require special export crating. Check with your freight carrier.

When installed, single bearing generator rotors are supported on the drive end by the drive discs bolted to the engine flywheel. When the engine is removed, the rotor must be supported by an appropriate fixture to prevent main rotor, main stator or exciter damage (Figure 11-1). Before shipping any single bearing generator, the main rotor must be supported by the adapter using an appropriate fixture.

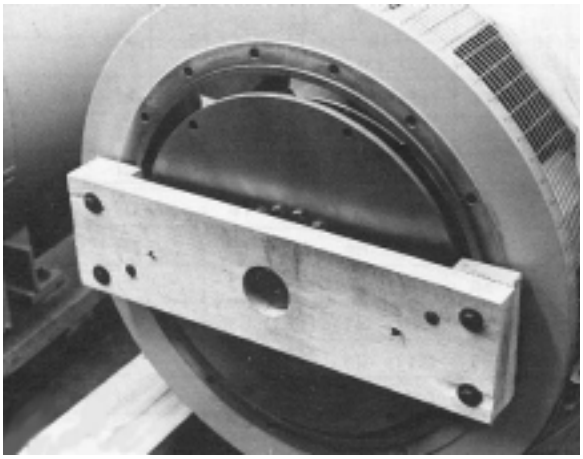

Figure 11-1

STORAGE INSTRUCTIONS

If the generator is placed in storage, the following precautions should be taken to protect it:

A. Equipment must be kept clean.

1. Store indoors.

2. Keep covered to eliminate airborne dust and dirt.

3. Cover openings for ventilation, conduit connections, etc. to prevent entry of rodents, snakes, birds, and insects, etc.

B. Equipment must be kept dry.

1. Store in a dry area indoor.

2. Temperature swings should be minimal to prevent condensation.

3. If stored in an unheated or damp building, space heaters will be required to prevent internal condensation.

4. Treat unpainted flanges, shafts, drive discs, and fittings with a rust inhibitor.

5. Check insulation resistance of all windings before starting the generator. If readings are low, the windings must be dried.

C. Keep bearings lubricated.

1. Every six months rotate shaft several turns to distribute grease in bearings.

2. If unit has been stored more than one year, add grease before start-up.

D. Review and follow instructions in Sections 3 and 4 before putting the gen-set into service.

CAUTION
DO NOT ATTEMPT TO TRANSPORT ANYGENERATOR WITHOUT PROPER ROTOR SUPPORT, EXTENSIVE EQUIPMENTDAMAGE CAN OCCUR.

TABLE 12-1: MAGNA MAX - FASTENER AND TORQUE SPECIFICATIONS

Part Description	Fastener Spec.®	430-570 Frames		740 Frames	
		Size Dia.-Thread	Torque Ft-Lb.	Size Dia.-Thread	Torque Ft-Lb.
Front Bracket	Grade 5 cap screws with flat and lock washers	3/8 - 16	25	1/2 - 13	60
Bearing Caps	Grade 5 cap screws with lock washers	3/8 - 16	25	3/8 - 16	25
Drive Disc	Grade 8 cap screws with hardened washers	5/8 - 18	192	5/8 - 18	192
Adapter (or rear bracket)	Grade 5 cap screws with flat and lock washers	3/8 - 16	25	1/2-13	60
Conduit Box	Grade 5 cap screw with star type lock washer	3/8 - 16	25	1/2-13	60
PMG Stator	Grade 5 cap screws with Belleville washers	1/2-13	4	1/2-13	4
Exciter Stator	Grade 5 cap screws with Belleville washers	1/2-13	60	1/2-13	60
Exciter Armature (rotor)	Grade 8 cap screw with Belleville washer	1/2-13	84	1/2-13	84
Cooling Fan	Grade 5 cap screws with Belleville washers	1/2-13	60	1/2-13	60
Main Rotor Coil Supports	Grade 8 cap screws with Belleville washers	5/16-18	19	3/8 - 16	35
Rectifier Assembly Mounting	Grade 5 cap screws	1/4-20	4	1/4-20	4
Drive Hub Set Screw	Socket head set screw 1/4 in. hex key	1/2-13	50	1/2-13	50

NOTES: For table 12-1
All fasteners are SAE (American) standard.
All torque values are for plated hardware that is standard on the MagnaMAX.
If hardware is replaced with non-plated, refer to Table 12-2.
Always use quality hardware of the grade specified.
Main Rotor Coil Supports 570 and 740 frame only. Not used on 430 frames.

TABLE 12-2: CAPSCREW TORQUE VALUES

NOTES: Cap screws threaded into aluminum may require reductions in torque of 3O% or more.

	Cap screw Diameter and Ultimate Tensile Strength (PSI)								
	To 1/2 - 69,000 PSI To 3/4 - 64,000 PSI To 1 - 55,000 PSI			To 3/4 - 120,000 PSI To 1 - 115,000 PSI			150,000 PSI		
SAE Grade	1 OR 2			5			8		
Size (Inches) - (Thread)	Torque Ft-LB (N-M)			Torque Ft-Lb. (N-M)			Torque Ft-LB (N-M)		
	Dry	Oiled	Plated	Dry	Oiled	Plated	Dry	Oiled	Plated
1/4-20	5(7)	4.5 (6)	4(5)	8 (11)	7 (9)	6 (8)	12 (16)	11 (15)	10 (14)
1/4-28	6(8)	5.4 (7)	4.8 (6)	10 (14)	9 (12)	8 (11)	14 (19)	13 (18)	11 (15)
5/16-18	11 (15)	10 (14)	9 (12)	17 (23)	15 (20)	14 (19)	24 (33)	22 (30)	19 (26)
5/16-24	13 (18)	12 (16)	10 (14)	19 (26)	17 (23)	15 (20)	27 (37)	24 (33)	22 (30)
3/8-16	18 (24)	16 (22)	14 (19)	31 (42)	28 (38)	25 (34)	44 (60)	40 (54)	35 (47)
3/8- 24	20 (27)	18 (24)	16 (22)	35 (47)	32 (43)	28 (38)	49 (66)	44 (60)	39 (53)
7/16 - 14	28 (38)	25 (34)	22 (30)	49 (66)	44 (60)	39 (53)	70 (95)	63 (85)	56 (76)
7/16-20	30 (41)	27 (37)	24 (33)	55 (75)	50 (68)	44 (60)	78 (106)	70 (95)	62 (84)
1/2-13	39 (53)	35 (47)	31 (42)	75 (102)	68 (92)	60 (81)	105 (142)	95 (129)	84 (114)
1/2-20	41 (56)	37 (50)	33 (45)	85 (115)	77 (104)	68 (92)	120 (163)	108 (146)	96 (130)
9/16-12	51 (69)	46 (62)	41 (56)	110 (149)	99(134)	88(119)	155 (210)	140 (190)	124 (168)
9/16-18	55 (75)	50 (68)	44 (60)	120 (163)	108 (146)	96 (130)	170 (230)	153 (207)	136 (184)
5/8-11	83 (113)	75 (102)	66 (89)	150 (203)	135 (183)	120 (163)	210 (285)	189 (256)	168 (228)
5/8-18	95 (129)	86 (117)	76 (103)	170 (230)	153 (207)	136 (184)	240 (325)	216 (293)	192 (260)
3/4-10	105 (142)	95 (130)	84 (114)	270 (366)	243 (329)	216 (293)	375 (508)	338 (458)	300 (407)
3/4-16	115 (156)	104 (141)	92 (125)	295 (400)	266 (361)	236 (320)	420 (569)	378 (513)	336 (456)
7/8-9	160 (217)	144 (195)	128 (174)	395 (535)	356 (483)	316 (428)	605 (820)	545 (739)	484 (656)
1-14	175 (237)	158 (214)	140 (190)	435 (590)	392 (531)	348 (472)	675 (915)	608 (824)	540 (732)
1 -8	235 (319)	212 (287)	188 (255)	590 (800)	531 (720)	472 (640)	910 (1234)	819 (1110)	728 (987)
1- 14	250 (339)	225 (305)	200 (271)	660 (895)	594 (805)	528 (716)	990 (1342)	891 (1208)	792 (1074)

TABLE 12-3:EXCITATION DATA -60 HZ - 1800 RPM

Model Number Low Volts	Exciter Field Resistance-Ohms @25°C	Exciter Field Volts Fl and F2 at regulator No Load 240/480 Volts	No Load Output Voltage With Fixed Excitation High Wye Connection®	
			12V DC	24V DC
431RSL4005	22.5	13.3	460	550
431RSL4007	22.5	14.2	450	545
432RSL4009	22.5	15.3	445	535
432RSL4011	22.5	13.5	460	550
432RSL4013	22.5	11.3	490	580
432RSL4015	22.5	13.1	440	530
432RSL4017	22.5	14.4	450	545
433RSL4019	22.5	16.9	430	525
433RSL4021	22.5	13.7	450	550
572RSL4024	23.0	16.1	440	520
572RSL4027	23.0	16.1	440	520
572RSL4028	23.0	17.5	425	510
572RSL4030	23.0	15.2	440	530
573RSL4032	23.0	15.0	445	530
573RSL4034	23.0	17.0	430	520
574RSL4036	23.0	18.2	420	510
574RSL4038	23.0	15.0	440	540
741RSL4042	22.0	14.8	445	540
741RSL4044	22.0	15.2	440	540
741RSL4046	22.0	15.6	430	540
742RSL4048	22.0	17.4	410	525
743RSL4050	22.0	13.7	460	565
743RSL4052	22.0	19.4	400	510
744RSL4054	22.1	18.6	400	510
744FSL4060	22.1	15.1	420	570
744FSL4062	22.1	16.6	410	535
Model Number Medium Volts	Exciter Field Resistance-Ohms @25°C	Exciter Field Volts Fl and F2 at Regulator No Load 4160 Volts	No Load Output Voltage With Fixed Excitation Wye Connection	
			12V DC	24V DC
573FSM4352	23.0	23.5	3100	4200
573FSM4354	23.0	20.3	3300	4400
574FSM4356	23.0	20.7	3200	4300
574FSM4358	23.0	17.3	3500	4600
741FSM4360	22.0	16.7	3600	4600
742FSM4364	22.0	15.4	3700	4700
742FSM4366	22.0	16.3	3600	4600
743FSM4368	22.1	17.7	3200	4600
743FSM4370	22.1	17.0	3500	4600

For rated load exciter field volts - see generator nameplate.
For low wye connection: divide value shown in table by 2.
For high delta connection: divide value shown in table by 1 .732.
For delta connection: divide value shown in table by 1 .732.

TABLE 12-4:EXCITATION DATA -50 HZ - 1500 RPM

Model Number Medium Volts	Exciter Field Resistance-Ohms @25°C	Exciter Field Volts Fl and F2 at Regulator No load @ 415 Volts	No Load Output Voltage With Fixed Excitation High Wye Connection	
			1 2V DC	24V DC
431RSL4005	22.5	15.6	380	460
431RSL4007	22.5	17.1	370	450
432RSL4009	22.5	18.0	360	445
432RSL4011	22.5	16.0	380	455
432RSL4013	22.5	13.1	400	480
432RSL4015	22.5	18.7	360	440
432RSL4017	22.5	17.4	370	450
433RSL4019	22.5	20.7	340	430
433RSL4021	22.5	16.7	360	450
572RSL4024	23.0	19.8	360	430
572RSL4027	23.0	20.0	355	430
572RSL4028	23.0	21.2	370	430
572RSL4030	23.0	18.4	360	440
573RSL4032	23.0	18.9	360	440
573RSL4034	23.0	20.7	350	430
574RSL4036	23.0	21.6	345	425
574RSL4038	23.0	17.7	365	450
741RSL4042	22.0	17.8	360	450
741RSL4044	22.0	18.1	360	450
741RSL4046	22.0	18.7	350	445
742RSL4048	22.0	20	340	440
743RSL4050	22.0	16.1	370	470
743RSL4052	22.0	22.9	330	420
744RSL4054	22.1	22.6	320	420
744FSL4060	22.1	17.0	350	470
744FSL4062	22.1	19.5	330	440
Model Number Medium Volts	Exciter Field Resistance-Ohms @25°C	Exciter Field Volts Fl and F2 at Regulator No load®3300 Volts	No Load Output Voltage With Fixed Excitation High Wye Connection	
			1 2V DC	24V DC
573FSM4352	23.0	21.2	2600	3400
573FSM4354	23.0	18.2	2700	3600
574FSM4356	23.0	18.4	2700	3600
574FSM4358	23.0	15.7	2800	3800
741FSM4360	22.0	15.4	3000	3800
742FSM4364	22.0	14.5	3000	3900
742FSM4366	22.0	15.6	2800	3800
743FSM4368	22.1	15.5	2800	3900
743FSM4370	22.1	15.5	2900	3800

For rated load exciter field volts - see generator nameplate.
For low wye connection: divide value shown in table by 2.
For high delta connection: divide value shown in table by 1 .732.For delta connection: divide value shown in table by 1 .732.

TABLE 12-5: RESISTANCE VALUES - MAIN WINDINGS

NOMINAL COLD (25°C) RESISTANCE IN OHMS

Base Model Low Voltage	Winding H-SG-	Main Stator	Main Rotor
431RSL4005	430049	.0855	.153
431RSL4007	430048	.0648	.173
432RSL4009	430046	.0418	.190
432RSL4011	430018	.0410	.186
432RSL4013	430015	.0370	.189
432RSL4015	430017	.0260	.225
432RSL4017	430016	.0240	.226
433RSL4019	430042	.0140	.286
433RSL4021	430039	.0137	.297
572RSL4024	570078	.0132	.376
572RSL4027	570072	.0126	.398
572RSL4028	570080	.0092	.423
572RSL4030	570074	.0089	.426
573RSL4032	570075	.0074	.472
573RSL4034	570076	.0059	.507
574RSL4036	570077	.0049	.584
574RSL4038	570069	.0048	.601
741 RSL4042	740040	.0045	.677
741 RSL4044	740041	.0039	.708
742RSL4046	740042	.0036	.748
742RSL4048	740043	.0030	.776
743RSL4050	740051	.0023	.889
743RSL4052	740045	.0018	.979
744RSL4054	740046	.0015	1.100
744FSL4060	740306	.0026	.892
744FSL4062	740307	.0018	1.044
Base Model Medium Voltage	Winding H-SG-	Main Stator®	Main Rotor
573FSM4352	570213	1.030	.383
573FSM4354	570214	.854	.411
574FSM4356	570215	.568	.508
741FSM4360	740230	.277	.667
742FSM4364	740204	.233	.768
742FSM4366	740206	.151	.888
743FSM4368	740207	.127	.954
743FSM4370	740208	.101	1.053

Main stator values shown are line to line on the high wye connection. For low wye connection divide value shown in table by 4.

TABLE 12-6: RESISTANCE VALUES - EXCITER WINDINGS

NOMINAL COLD (25°C) RESISTANCE IN OHMS

Low Voltage	Exciter Stator (Field)	Exciter Rotor (Armature)	PMG Stator
430 Frames	22.5	0.022	2.1
570 Frames	23.0	0.045	2.1
741 Frames	22.0	0.043	2.1
742 Frames	22.0	0.043	2.1
743 Frames	22.0	0.043	2.1
744 Frames	22.1	0.048	2.1
Medium Voltage	Exciter Stator (Field)	Exciter Rotor (Armature)	PMG Stator
570 Frames	23.0	0.070	2.1
741 Frames	22.0	0.043	2.1
742 Frames	22.0	0.043	2.1
743 Frames	22.1	0.048	2.1

Magna One® Generator Installation, Operation and Maintenance Manual

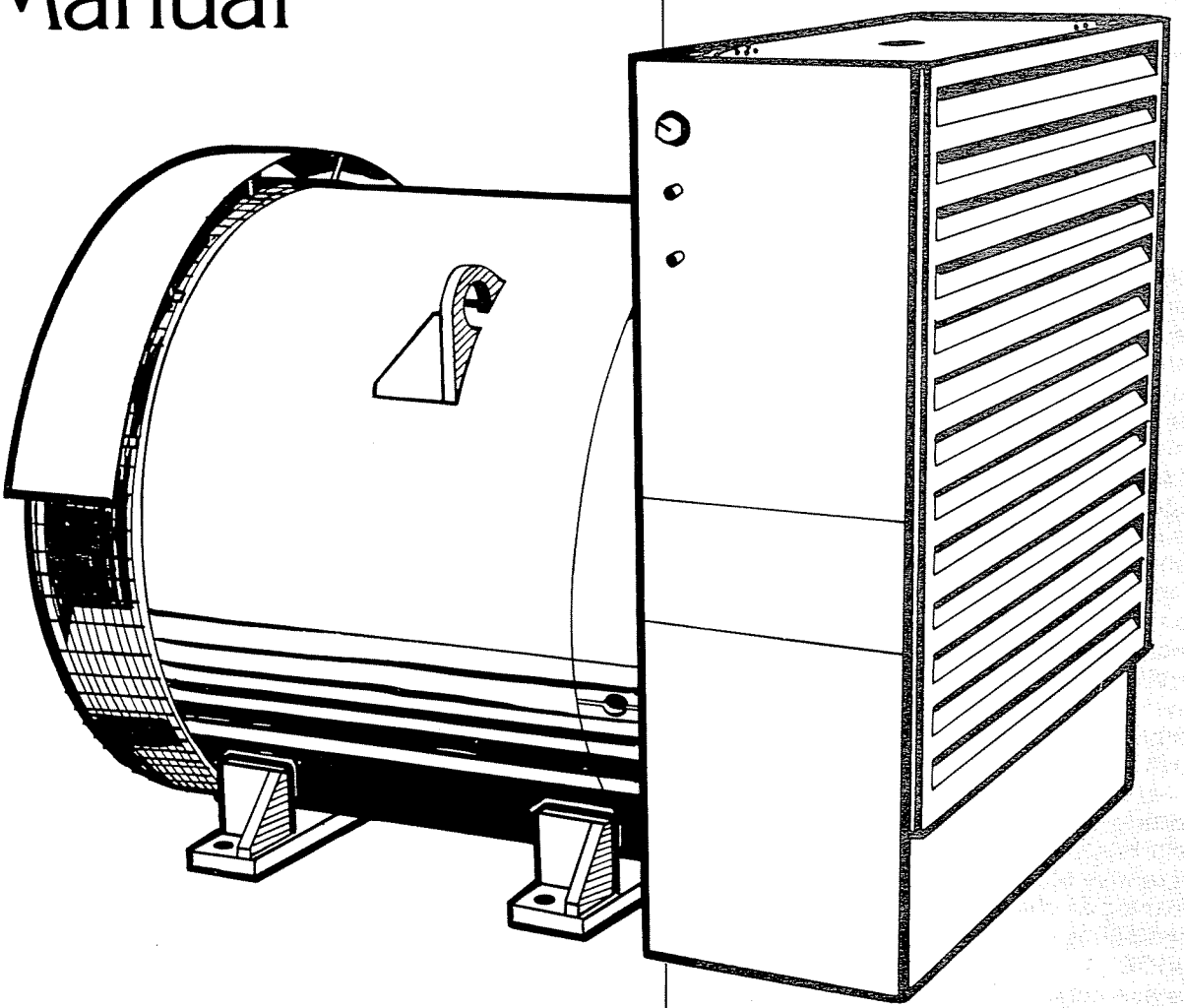

MARATHON® ELECTRIC
WAUSAU, WISCONSIN 54401

FOREWORD

This service manual applies to Magna One brushless ac generators manufactured by Marathon Electric Manufacturing Corporation. It contains instructions for installation, operation, and maintenance of these generators. Also included is a Parts List Section, a Trouble Shooting Section, Shipping Instructions and a Sales and Service Listing.

WARNING

These instructions must be followed to insure safe and proper installation, operation and maintenance of the generator. They should be brought to the attention of all persons who install, operate or maintain this equipment.

Disconnect all power before servicing. Failure to follow all safety information can result in serious personal injury or death. Install and ground per local and national codes. Consult qualified personnel with any questions.

TORSIONAL VIBRATION

The factors which are most critical to torsional vibration are contained in the design of the engine. The engine-generator set manufacturer, his representative or buyer shall be responsible for the torsional analysis and approval of the engine-generator combination. Marathon Electric will submit to the above for approval rotor weight and WK^2 information, along with such other data as is deemed necessary when requested to do so.

Marathon Electric will proceed with the manufacture of generators prior to the receipt of torsional approval unless specifically requested in writing to delay production for receipt of such approval from the buyer. The buyer will be responsible for manufacturing charges incurred as a result of manufacturing prior to torsional approval.

Marathon Electric will not be responsible for the torsional vibrational characteristics of an installation when the engine vibrates on its base or steel bed and such vibration is transmitted to the supporting structure, or when the construction of the base is such that the engine-generator-mount natural frequency approaches that of the floor or sub-base resulting in magnification of vibration, or where the engine-generator combination has been found torsionally compatible, yet develops vibration due to a base of insufficient strength or inadequate sway-bracing.

INDEX

GENERAL INFORMATION
- General 1
- Mechanical Construction 1
- Unirotor™ Construction 2
- Stator 2
- Ventilation System 2
- Electrical Connections 2

INSTALLATION
- Receiving your Magna One Generator 3
- Moisture Removal 4
- Generator Insulation Testing 5
- Preparation for Use 6
- Generator Mounting 6
- Electrical Connections 7-12
- Paralleling Operations 13, 14
- Thyristor or Silicon Controlled Rectifier Loading 14

OPERATION
- Pre-start Inspection 15
- Starting-up the Generator 15
- Field Flashing 15
- Preventive Maintenance 16, 17
- Cleaning Methods 16
- Lubrication 17, 18

SERVICE
- Disassembly 19-23
  - Removal from Prime Mover 19
  - Exciter Removal 19, 20
  - Main Rotor Removal 20, 21
  - Conduit Box and Front End Removal 22, 23

SERVICE (Continued)
- Inspection 24-28
  - Exciter Inspection 24
  - Main Rotor Inspection 24-27
  - Front End Bracket Inspection 27
  - Drive End Bracket or SAE Adaptor Inspection 27
  - Main Stator Inspection 28
  - Conduit Box and Voltage Regulator Inspection 28
- Assembly 29-35
  - Conduit Box and Front End Bracket Installation 29, 30
  - Main Rotor Installation 30-32
  - Exciter Installation 32, 33
  - Assembly to Prime Mover 33-35
  - Capscrew Torque Values 34

TROUBLE SHOOTING
- Generator Does Not Produce Voltage 36
- Generator Produces Low Voltage 37
- Generator Produces High Voltage 38
- Generator Voltage is Fluctuating 38

PARTS LIST
- Single Bearing Generator Parts List 39
- Exciter (rotor) Armature Stator and Rectifier Assembly 40
- Recommended Spare Parts 41

SHIPPING INSTRUCTIONS
- Shipping Instructions 42

SALES AND SERVICE ..... Back Cover

GENERAL INFORMATION

GENERAL

A generator is a device which transforms mechanical energy into electrical energy. Magna One Generators are brushless, 4-pole machines producing 60 Hz power at 1800 rpm, or 50 Hz power at 1500 rpm (Hz = Hertz = cycles per second). All standard units are rated at 0.8 power factor.

Single bearing generators are supplied with an SAE adaptor and flexible drive discs on the drive end as standard. Alignment of the generator and engine is assured by the concentricity of the flywheel housing and the generator adaptor. Flexible drive discs are piloted in a rabbet in the flywheel itself, again assuring alignment. It may be necessary to shim the generator feet on the base for solid support. Two bearing units come standard with two brackets and a shaft extension for a drive coupling.

Ac generators require direct current flowing through the rotor winding to set up the magnetic flux which allows the unit to generate. A small ac exciter, which actually is a miniature replica of the main generator, provides this direct current. The exciter is mounted on the same shaft as the generator rotor. While the main generator field rotates and the armature is stationary, the exciter field is stationary and the armature rotates. The output from this exciter is fed into the rectifying elements mounted on a heat sink. This rectifier assembly is located on the end of the main shaft, opposite the drive end (see figure below).

The ac exciter itself requires direct current for its excitation. This excitation is supplied by rectifying a portion of the output of the main generator by means of a static voltage regulator. The amount of current going into the field of the exciter will determine the output voltage of the exciter, and this in turn will control the output voltage of the main generator. Meters, controls, or other features needed to satisfy installation requirements are available as optional extras.

MECHANICAL CONSTRUCTION

Magna One brushless generators are designed and manufactured with the same engineering precision and craftsmanship that has, for years, gained Marathon Electric an outstanding reputation in this field. Precision machine parts, together with careful hand assembly, give the Magna One durability and reliability.

A solid, rolled steel frame, results in rigid support for the stator core and end brackets. The stator core is firmly anchored to the frame by the welding of bar steel core supports to the core and frame.

The end brackets and adaptors are made of cast iron for the ultimate rigidity required to support the heavy duty shielded bearings. A front bracket supports the stationary exciter field structure. For single bearing units, the frame is fitted with a rugged cast iron SAE adaptor, precision rabbeted to insure alignment with the prime mover. A nodular iron hub is keyed and heat shrunk to the shaft. This hub carries a number of flexible steel drive discs which have holes for fastening to the flywheel (for some adaptor-disc combinations a spacer is used between the hub and discs to maintain the proper distance between the discs and SAE adaptor face). This affords flexibility, in the axial direction, while in the radial direction it acts as a rigid coupling providing a uniform air gap.

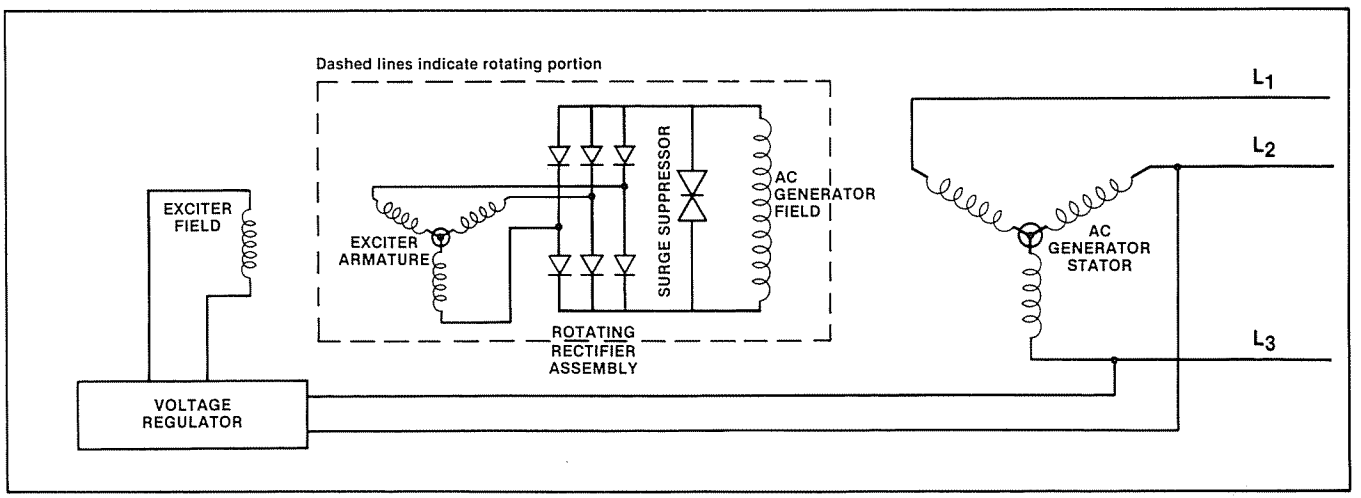

GENERAL INFORMATION

For two bearing generators, a second bracket and standard shaft extension is substituted for the adaptor and flexible drive discs. The 360 and 440 Frames are available with long shaft extensions for belt drive applications while all frame sizes are suitable for coupled drive. When selecting a belt driven generator, refer to the chart on Page 6 for the drive details under which these units will operate successfully.

UNIROTOR™ CONSTRUCTION

A unique feature of the Magna One generator is that the amortisseur winding and coil supports are die cast as an integral part of the rotor. The 4 poles which carry the field windings are one piece laminations die cast with aluminum providing high mechanical integrity, and low vibration at operating speeds. This method has been time proven to be far superior to separate pole pieces which must be dovetailed to a spider or fastened by screws to the shaft.

The rotor pole assembly is heat shrunk and keyed to the shaft, forming a very rigid rotating element.

A thermo-setting bonding epoxy is applied between layers of the field winding and is applied to the finished rotor. The completed rotor is baked under a controlled cycle to ensure a solid, mechanically stable rotor. All rotors are dynamically balanced and then tested at a speed of 125% of the operating speed.

The ac exciter armature and the heat sink which carries the diodes are mounted on an assembly which is placed on the generator shaft outboard of the front generator bearing.

STATOR

The stator laminations are composed of thin, low-loss steel, notched on precision presses. The cores are reinforced by rugged steel stack rings and supporting bars which are welded around the core. Up to 600 volts, random-wound coils are placed in slots insulated with Class F materials. Once the properly insulated coils have been inserted in the stator core, the entire core is then given multiple dips and bakes in a thermo-setting varnish by a special process which ensures complete coverage. This premium insulation system utilizes all synthetic and non-hygroscopic materials making the standard windings fungus resistant and suitable for operation in high humidity and abrasive environments. Subsequently, the wound core is placed into and welded to the frame.

VENTILATION SYSTEM

Magna One generators employ an advanced flow-through ventilation system. The cast aluminum alloy ventilating fan draws air through louvers in the conduit box, over the main stator and exciter windings and exhausts it through ventilation screens in the adaptor. This exclusive design provides efficient cooling as air is distributed evenly throughout the generator, effectively reducing the recirculation of hot air. Since there is only one air intake, mounting of air filtration systems is easily accomplished.

ELECTRICAL CONNECTIONS

The large front end mounted conduit box is constructed of formed sheet steel with ample room inside for the voltage regulator, most circuit breakers and other options. A hole-saw or any suitable tool can be used to provide a hole for the conduit entrance. An approved connector must be used in conjunction with the conduit. The regulator can be moved from the left to the right side with relative ease if the entrance of the conduit is needed in this location.

IMPORTANT: To minimize the transmission of vibration, it is essential that flexible conduit be used for all electrical connections to the generator. Refer to the connection diagrams supplied with the generator and install all intercomponent and external wiring in accordance with the regulations of the national and local regulatory bodies. Be sure the generator frame is grounded to all the other components of this system with the ground wire complying with national and local codes. Terminal lugs① are provided on all low voltage (below 600 volts) generators except 682 frames where buss bars are used. Above 600 volts, terminal lugs① are used exclusively. Clean all contact surfaces to assure good electrical bonding with the generator lugs or buss bars. Use heavy duty terminal lugs or good quality clamps for making all connections. Tape all connections in accordance with national and local regulations.

①CSA certified terminal lugs are used.

RECEIVING YOUR MAGNA ONE GENERATOR

Upon receipt of the generator, it is recommended that it be carefully examined to determine if any shipping damage has occurred before accepting the shipment from the transportation company.

UNPACKING AND HANDLING

Read all instruction cards carefully. When lifting, attach an overhead crane to the lifting lugs on the generator frame. Apply lifting forces in a vertical direction, if possible.

WARNING

DO NOT LIFT COMPLETE GENERATOR SET BY MEANS OF LIFTING LUGS ON GENERATOR. PERSONAL INJURY OR EQUIPMENT DAMAGE MAY RESULT.

WARNING

DO NOT APPLY ANY FORCE TO GENERATOR FAN FOR LIFTING OR ROTATING GENERATOR ROTOR. DISREGARDING THESE INSTRUCTIONS MAY CAUSE PERSONAL INJURY OR EQUIPMENT DAMAGE.

STORAGE

In the event that the generator is not to be installed on the prime mover immediately, it is recommended that it be stored in a clean, dry area which is not subject to rapid changes in temperature and humidity.

INSPECTION

It is recommended that the insulation resistance of the generator stator be checked with a megohmmeter prior to initial operation. In order to do this, all stator leads must be connected together and the insulation resistance measured from the lead terminals to the stator frame. Make certain the stator leads are not touching the frame. A megohm reading should be obtained that is equal to or greater than the following formula:

$$\text{Minimum Megohms} = \frac{\text{Rated Voltage}}{1000} + 1$$

An insulation resistance greater than the minimum indicates the insulation is in good condition. (NOTE: 1 megohm = 1,000,000 ohms.) A record should be kept of the resistance readings for comparison with future data. A drop in resistance values indicates wet, dirty or grounded insulation. In this case, clean and dry the winding using one of the listed methods on the following pages and check for grounds following the instructions in the "GENERATOR INSULATION TESTING" section.

CAUTION: READ THE "GENERATOR INSULATION TESTING" SECTION THOROUGHLY BEFORE USING A MEGGER ON THE ROTOR OR EXCITER FIELD. EXTENSIVE EQUIPMENT DAMAGE CAN RESULT FROM IMPROPER TESTING.

INSTALLATION

MOISTURE REMOVAL

Machines that have been idle for sometime in unheated and damp locations, may have "sweated" as a result of sudden changes in temperature or may have become wet by accident. These should be dried out thoroughly before being put into service. The following are recommended drying methods.

Oven

Place the machine in an oven and bake it at a temperature not to exceed 90 degrees C or 194 degrees F. The voltage regulator and any electronic component accessories must be removed from the generator when using this method.

Space Heaters

Enclose the generator with a covering and insert heating units (space heaters, lamps or coils of steam pipe) to raise the temperature. Leave a hole at the top of the enclosure to permit the escape of moisture.

Forced Air

A portable forced air heater can be used by directing heat to the end of the generator opposite the coupling and running the generator with no load and without excitation (this can be accomplished by removing the regulator fuses). Heat at point of entry should not exceed 66 degrees C (150 degrees F) at the bearing hub.

"Short Circuit" Method

The Generator can be dried out quickly and thoroughly by using this method. NOTE: Be sure that all of the following steps are performed and all precautions taken as personal injury or serious damage to the generator could result.

1. Disconnect exciter leads F1 and F2 from the terminal block.
2. Connect a dc battery or other dc power source of approximately 20-35 volts (depending on the kW of your unit) to the exciter leads F1 and F2. An adjustable voltage source is desirable, however a voltage adjust rheostat (rated approximately 2 amps) in series with the dc power source will accomplish the same result.
3. Short circuit the generator lead wires to each other (L1 to L2 to L3).
4. Start the generator and measure the current through the leads with a clip-on ammeter.
5. Adjust the voltage source to produce approximately 80% of the rated ac nameplate current, but in no case exceed nameplate amps. If an adjustable source is not available and current is excessive, use a small dc source or a large resistor in series with the source.

   Running time will be determined by the amount of moisture present in the machine. Insulation resistance checks should be taken every one to four hours until a fairly constant value is obtained, equal to or greater than the following formula:

$$\text{Megohms} = \frac{\text{Rated Voltage}}{1000} + 1$$

6. After machine has achieved a constant resistance value, disconnect the dc power source and reconnect F1 from the exciter to F(+) on the terminal block, and F2 to F(-). Make sure that all leads are reconnected properly.

If it is necessary to dry out the generator, it is recommended that the unit be thoroughly tested using the "Generator Insulation Testing" procedures found on the next page.

GENERATOR INSULATION TESTING

The following tests can be used to check minimum insulation resistance. Minimum insulation resistance can be tested using a megohmmeter.

CAUTION: MEGOHMMETER MUST NEVER BE APPLIED TO VOLTAGE REGULATOR OR DIODES - EQUIPMENT DAMAGE WILL RESULT.

$$\text{Minimum insulation resistance in megohms} = \frac{\text{Machine Voltage}}{1000} + 1$$

Example: 480 volt line to line generator:

$$\text{Minimum Insulation Resistance} = \frac{480}{1000} + 1 = 1.48 \text{ Megohms}$$

MAIN STATOR (ARMATURE)

1. All stator leads must be connected together. Connect one megohmmeter lead to stator leads and the other megohmmeter lead to the generator frame. Make sure the other stator leads are not touching the frame.

   a. A reading lower than the calculated minimum indicates an unacceptably low generator insulation resistance.

   Clean, dry and/or repair stator, replace if necessary.

MAIN ROTOR (MAIN FIELD)

1. Disconnect the two generator main field leads which come out through the end of the rotor shaft. These wires connect to each of the two diode heat sinks.

   NOTE: Make sure neither of the two leads touch any other part.

2. Apply one megohmmeter lead to one generator field lead and the other megohmmeter lead to the aluminum standoff casting (behind insulation plate on exciter rotor).

   a. A reading of less than the calculated minimum indicates an unacceptably low main field insulation resistance.

   Clean, dry and/or repair generator rotor, replace if necessary.

EXCITER STATOR (FIELD)

1. Disconnect exciter field leads from F+ and F- on terminal strip next to opening inside regulator box.

   NOTE: Location and markings on wires.

2. Connect one megohmmeter lead to exciter field lead and the other to the exciter frame.

   a. A reading lower than the calculated minimum indicates an unacceptably low exciter field insulation resistance.

   Clean, dry and/or repair the exciter stator, replace if necessary.

EXCITER ROTOR (ARMATURE)

1. Remove diode leads from studs, being certain to note the proper location for reconnection.

2. Apply one megohmmeter lead to one of the exciter rotor leads and the other lead to the aluminum standoff casting (behind insulation plate on exciter rotor).

   a. A reading of less than the calculated minimum indicates an unacceptably low exciter rotor insulation resistance.

   Clean, dry and/or repair the exciter rotor, replace if necessary.

INSTALLATION

PREPARATION FOR USE
GENERATOR MOUNTING

PREPARATION FOR USE

Although the generator is carefully inspected and tested in operation before it leaves the factory, it is recommended that the unit be thoroughly inspected. The insulation on the wire should be inspected and all bolts should be checked for tightness.

Remove all shipping tapes, bags, blocks and skids which are used to prevent vibration and rotor movement during shipment. Dry, low-pressure compressed air of approximately 30 PSI (206 KPA) can be used to blow out the interior of the generator. In the case of two bearing machines, it is possible to turn the rotor by hand to make sure that it rotates smoothly without binding.

If the machine has been in storage for a year or longer, it is recommended that it be lubricated according to the lubrication instructions and chart found in the "Lubrication" section of this manual.

GENERATOR MOUNTING

Single bearing generators are provided with an SAE flywheel adaptor and flexible drive discs. Very close tolerances are maintained in the manufacture of the generator so that the alignment procedure is extremely simple. A coupling hub of nodular iron is shrunk on the shaft and special steel drive discs are bolted to the hub. Holes are provided in the periphery of the coupling disc which correspond to tapped holes in the flywheel. The outside diameter of the discs fits in a rabbet in the flywheel so that concentricity is assured in all cases.

CAUTION: GRADE 8 CAPSCREWS AND HEAVY SERIES LOCKWASHERS OR GRADE 8 PLACE-BOLTS AND HARDENED WASHERS ARE RECOMMENDED TO MOUNT THE DRIVE DISCS TO THE FLYWHEEL.

The SAE adaptor and the flywheel housing are designed to match each other with no further alignment necessary. Shims may be necessary under the feet of the generator to insure a solid mounting.

TWO BEARING GENERATOR MOUNTING

Two bearing generators are provided with a shaft extension and keyway. For direct-coupled units, the assembler furnishes a flexible coupling which is installed between the driver and the generator shaft.

IMPORTANT: Aligning the two machines as accurately as possible will reduce vibration and insure minimum coupling wear. It may be necessary to shim the generator feet for proper support.

BELT DRIVE

360 and 440 frame, two bearing generators can be belt driven. Please refer to Marathon Electric for application assistance involving belt driven installations. Sheave diameters should be chosen according to the table below.

Magna One Sheave Application for Two Bearing Units①

Model	Min. Sheave Dia. in Inches @ 10,000 Hr. B-10 Life③		Min. Sheave Dia. in Inches @ 20,000 Hr. B-10 Life③		Max. Sheave Width Inches
	60 Hz	50 Hz	60 Hz	50 Hz	
360FDR8500	7.1	6.0	9.5	8.1	5.88
360FDR8504	7.9	6.7	10.4	8.7	5.88
362FDR8508	8.7	7.7	11.8	10.3	5.88
362FDR8512	12.2	10.0	16.8②	13.7	5.88
440FDR8016	10.2	8.5	13.7②	11.3	8.50
440FDR8020	12.7	11.2	17.2②	15.1	8.50
440FDR8024	14.4	12.4	19.6②	16.9②	8.50

①Assumptions:
A. Belting factor is 1.3.
B. The drive and the driven sheaves are the same diameter.
C. The sheave load is located at the center of the shaft extension.
D. Based upon continuous kW ratings.

② These sheave diameters exceed the maximum recommended belt speed of 6000 ft/min.
③ B-10 Life means 90% of the bearings will last this long or longer.

GENERATOR LEAD CONNECTIONS

The electrical connections in the conduit box should be made in accordance with the appropriate "connection diagram." Use the diagram appropriate for the number of leads and voltage range required.

The final voltage setting is established within the selected range by an adjustment of the voltage regulator.

The use of flexible conduit is required to minimize the effect of the engine vibrations.

CAUTION: SOME GENERATORS HAVE MULTIPLE, IDENTICALLY MARKED, CABLES FOR EACH LEAD. CONNECT ALL IDENTICALLY MARKED CABLES TOGETHER WHEN MAKING CONNECTION TO LOAD.

12 LEAD HI WYE

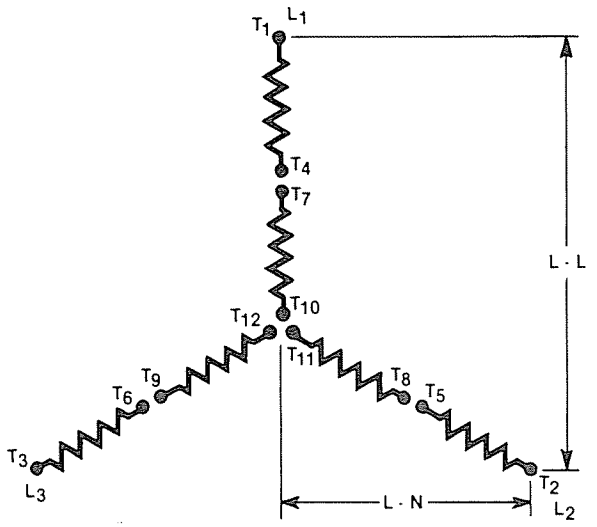

Twelve lead generators are dual voltage generators with six coils which don't have the connection of the three inner coils. There are 12 or 24 cables coming out of the generator.

VOLTAGE			CONNECT	L_1	L_2	L_3	NEUTRAL
	L-L	L-N					
60 HZ	380 416 440 460 480	219 240 254 266 277	T_{10} T_{11} T_{12}	T_1	T_2	T_3	T_{10} T_{11} T_{12}
			T_4 T_7				
			T_5 T_8				
50 HZ	380 400 416	219 231 240	T_6 T_9				

10 LEAD HI WYE

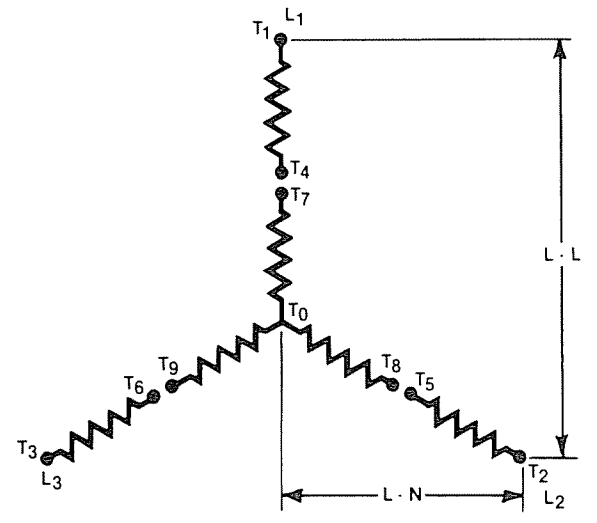

Ten lead generators are dual voltage generators with six coils. One end of the three inner coils is connected together. There are 10 or 20 cables coming out of the generator.

VOLTAGE			CONNECT	L_1	L_2	L_3	NEUTRAL
	L-L	L-N					
60 HZ	380 416 440 460 480	219 240 254 266 277	T_4 T_7	T_1	T_2	T_3	T_0
			T_5 T_8				
			T_6 T_9				
50 HZ	380 400 416	219 231 240					

INSTALLATION

ELECTRICAL CONNECTIONS

12 LEAD LOW WYE

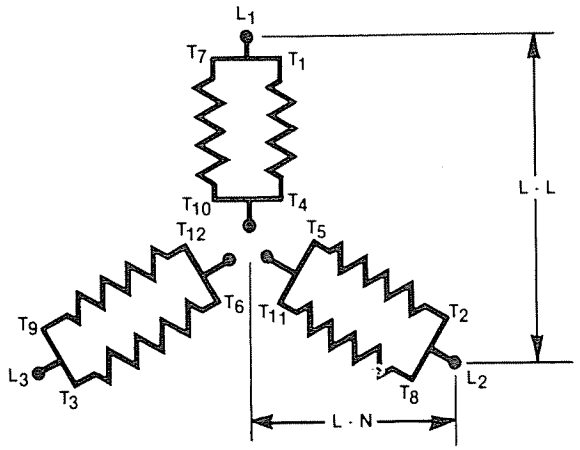

Twelve lead generators are dual voltage generators with six coils which don't have the connection of the three inner coils. There are 12 or 24 cables coming out of the generator.

VOLTAGE			CONNECT	L_1	L_2	L_3	NEUTRAL
	L-L	L-N					
60 HZ	190 208 220 230 240	110 120 127 133 139	T_{10} T_{11} T_{12} T_4 T_5 T_6	T_1	T_2	T_3	T_{10} T_{11} T_{12} T_4 T_5 T_6
			T_1 T_7				
			T_2 T_8				
50 HZ	190 200 208	110 115 120	T_3 T_9				

10 LEAD LOW WYE

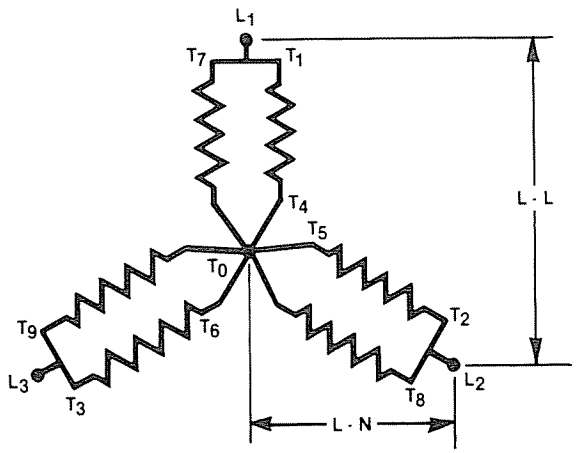

Ten lead generators are dual voltage generators with six coils. One end of the three inner coils is connected together. There are 10 or 20 cables coming out of the generator.

VOLTAGE			CONNECT	L_1	L_2	L_3	NEUTRAL
	L-L	L-N					
60 HZ	190 208 220 230 240	110 120 127 133 139	T_1 T_7	T_1	T_2	T_3	T_4 T_5 T_6 T_0
			T_2 T_8				
			T_3 T_9				
50 HZ	190 200 208	110 115 120	T_4 T_5 T_6 T_0				

12 LEAD HI DELTA

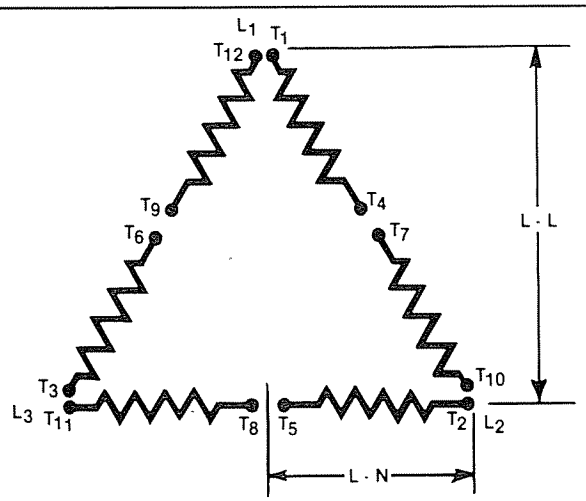

Delta connection with 12 lead generators only.

VOLTAGE			CONNECT	L_1	L_2	L_3
	L-L	L-N				
60 HZ	240 277	120 139	T_4 T_7	T_1	T_2	T_3
			T_5 T_8			
50 HZ	200 220 240	100 110 220	T_6 T_9			
			T_1 T_{12}			
			T_2 T_{10}			
			T_3 T_{11}			

12 LEAD LOW DELTA

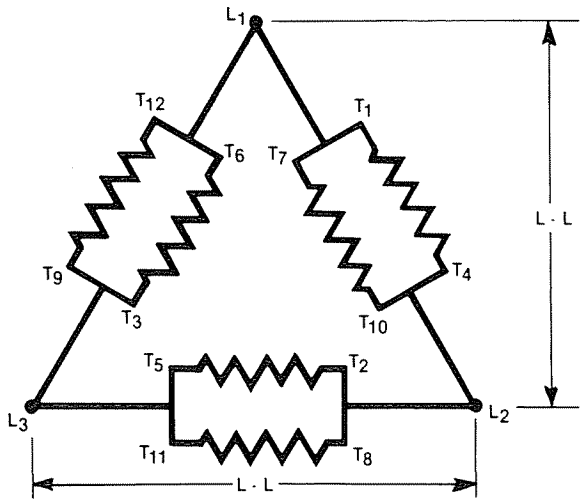

Delta connection with 12 lead generators only.

VOLTAGE		CONNECT	L1	L2	L3
	L-L				
60 HZ	120 139	T1 T7 T6 T12	T1	T2	T3
		T2 T8 T4 T10			
50 HZ	100 120	T3 T9 T5 T11			

6 LEAD WYE

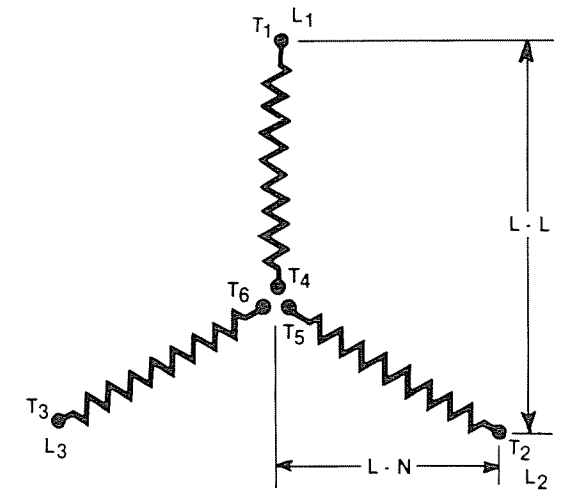

Six lead generators have 3 coil groups with 6 or 12 cables or bus bars coming out of the generator.

VOLTAGE			CONNECT	L1	L2	L3	NEUTRAL
	L-L	L-N					
60 HZ	190	110	T4 T5 T6	T1	T2	T3	T4 T5 T6
	203	120					
	220	127					
	230	133					
	240	139					
	3300	1905					
	4160	2400					
50 HZ	190	110					
	200	115					
	208	120					
	3300	1905					

6 LEAD DELTA

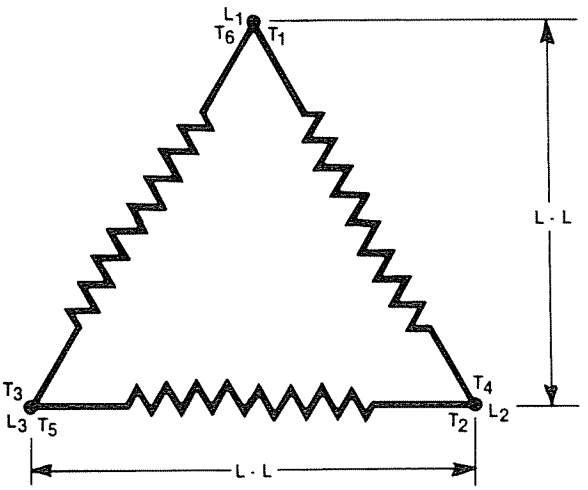

Six lead generators have 3 coil groups with 6 or 12 cables coming out of the generator.

VOLTAGE		CONNECT	L1	L2	L3
	L-L				
60 HZ	2400	T1 T6	T1	T2	T3
		T2 T4			
50 HZ	1905	T3 T5			

INSTALLATION

ELECTRICAL CONNECTIONS

4 LEAD WYE

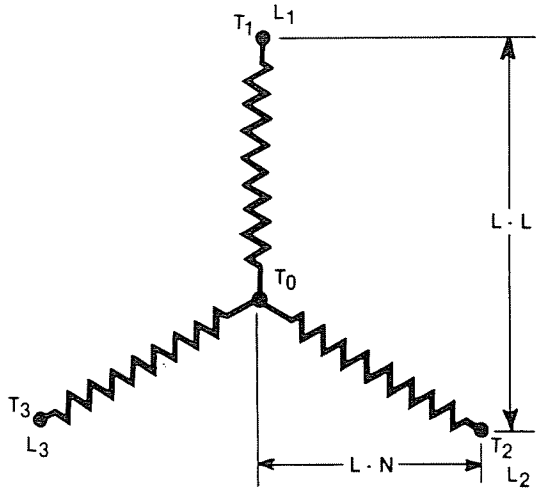

Four lead generators have 3 coil groups with one end of each group connected together. There are 4, 8 or 16 cables or 4 bus bars coming out of the generator.

VOLTAGE			L_1	L_2	L_3	NEUTRAL
	L-L	L-N				
60 HZ	380 416 440 460 480 600	219 240 254 266 277 346	T_1	T_2	T_3	T_0
50 HZ	380 400 416 480	219 231 240 277				

3 LEAD DELTA

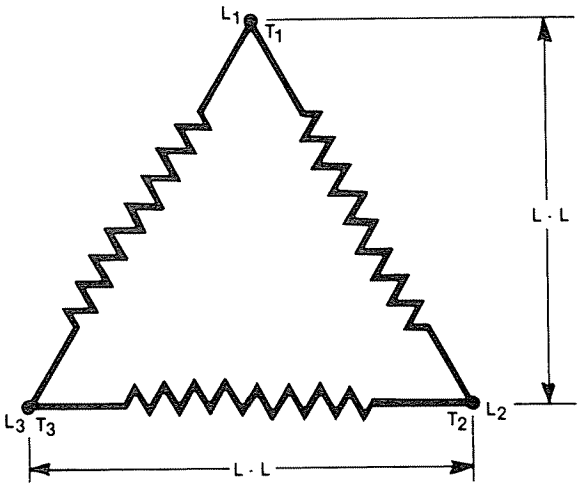

Three lead generators have 3 coil groups with one end of each group connected into a Delta internally. There are 3, 6, or 12 cables or 3 bus bars coming out of the generator.

VOLTAGE		L_1	L_2	L_3
	L-L			
60 HZ	480	T_1	T_2	T_3

12 LEAD ZIG-ZAG

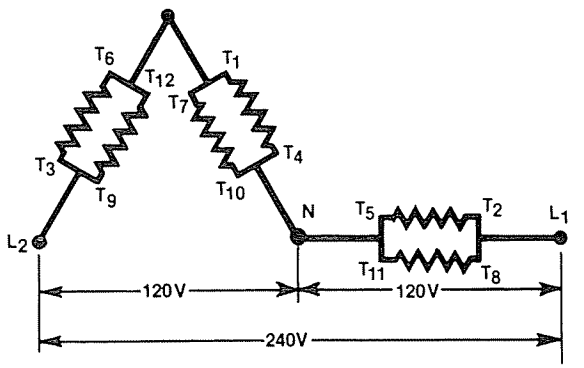

ZIG-ZAG connection with 12 lead machine only.

VOLTAGE		CONNECT	L_1	L_2	NEUTRAL
	L-L				
60 HZ	120/240	T_3 T_9	T_2	T_3	T_4
		T_2 T_8			
		T_1 T_6 T_7 T_{12}			
		T_4 T_{10} T_5 T_{11}			

VOLTAGE REGULATOR CONNECTION DIAGRAM - KR4 SERIES (208-240 VOLT TAP)

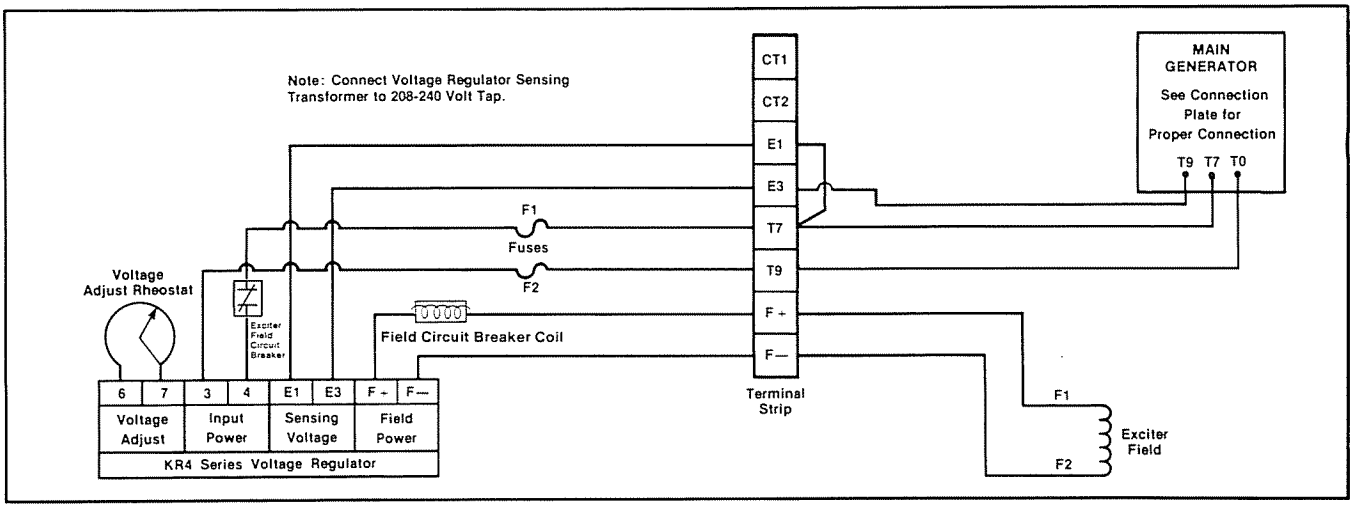

VOLTAGE REGULATOR CONNECTION DIAGRAM - KR7 SERIES (208-240 VOLT TAP)

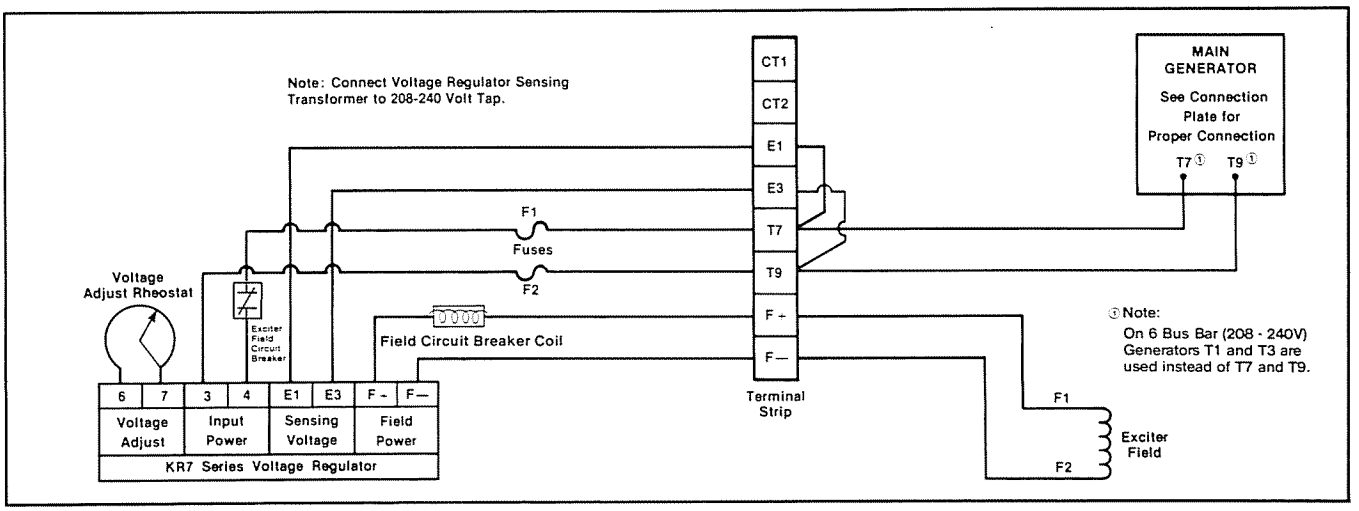

INSTALLATION

ELECTRICAL CONNECTIONS

VOLTAGE REGULATOR CONNECTION DIAGRAM - KR7 SERIES(416-480 VOLT TAP)

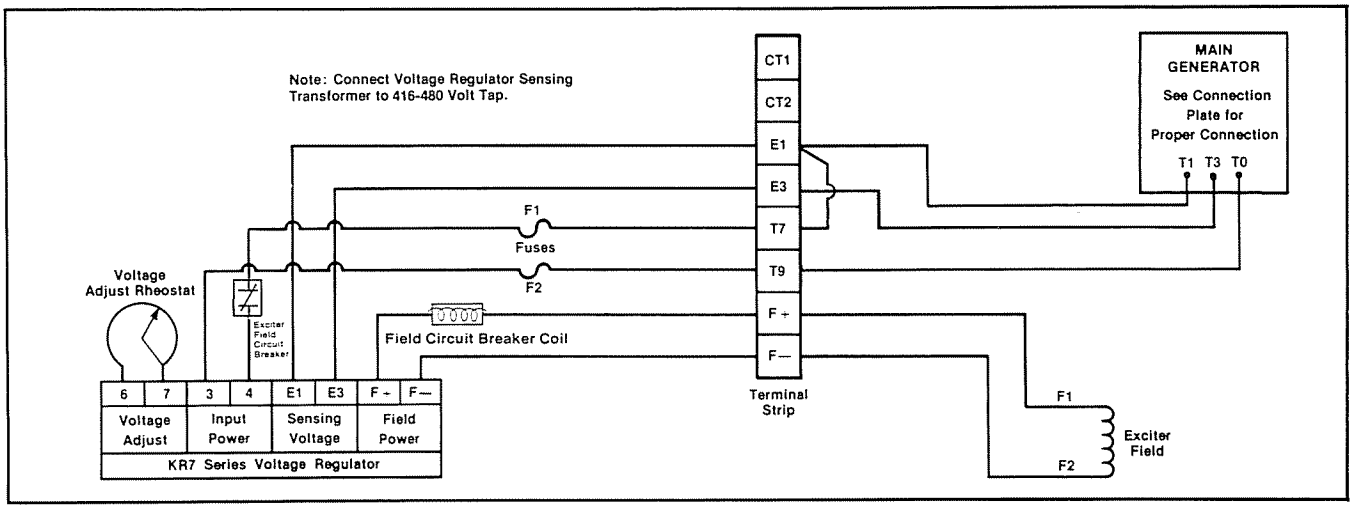

VOLTAGE REGULATOR CONNECTION DIAGRAM - KR7F SERIES (4160/2400 VOLT)

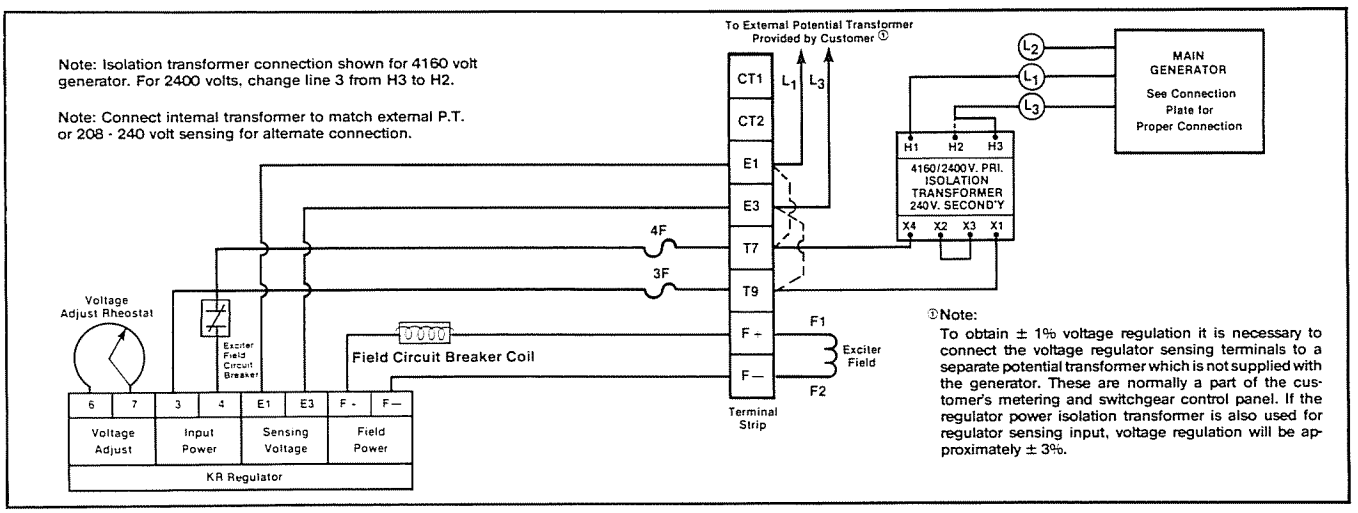

PARALLELING OPERATIONS

Magna One generators come standard with amortisseur windings die cast as an integral part of the rotor. This exclusive Unirotor construction makes all Magna One generators suitable for paralleling operations when the proper control equipment is added.Paralleling with other generator sets and/or with the utility power grid offers a number of advantages. Multiple unit installations increase power capacity; they can be added or removed from the load depending on the load required; they can be better maintained and repaired (since single source breakdown would mean total loss of power) and they often provide more reliable, efficient and economical operation.

Successful parallel operation means that the generators deliver power to the external system without delivering power to each other, or accepting power from the load buss or power grid. Additional equipment is necessary to insure safe and successful operation.

PRIME MOVER

The prime mover provides the speed and torque which will be necessary to keep the machines in synchronized operation. The speed will directly control the watt or kW load and frequency of the unit. The prime mover speed is controlled by a governor. The governor must have special paralleling and droop provisions to permit parallel operation with other machines.

VOLTAGE REGULATOR

The voltage regulator controls the generator output voltage and the reactive power supplied by the generator. When two or more ac generators operate in parallel, the voltage regulator must have paralleling provisions (either internally or external to the regulator) to permit it to control the reactive or VAR load while it is in parallel operation. A separate paralleling current transformer is required to sense the reactive current and signal the voltage regulator. This additional paralleling circuitry is absolutely necessary to control the reactive current flowing between the generator sets.

SWITCHGEAR

There are additional relays and breaker controls which are necessary to insure safe, trouble free operation of paralleled units. Reverse power relays monitor the direction of power flow to insure that the generator is delivering power, not accepting it. These power relays control breakers, which are a means of connecting and disconnecting the generator from the load. The total system can include over-voltage, over-current protection, under frequency protection, power factor correction provision and various associated control equipment from manual switchgear to micro-processors. The amount of control gear and level of sophistication will be determined by the needs and requirements of the particular application.

PARALLELING BASICS

The following points are basic criteria which must be met before two units can be paralleled. THIS IS NOT MEANT TO BE SPECIFIC INSTRUCTIONS FOR PARALLELING OPERATION.

1. Additional paralleling circuitry
   - A. Voltage regulator - paralleling provisions
   - B. Paralleling current transformers(s)
   - C. Paralleling provisions on governor controls
   - D. Switchgear
2. The voltage and frequency must be the same for all sets with voltages in phase.
3. The voltage regulation characteristics of the individual generators should be similar.
4. The generators must have the same phase rotation.
5. The driving engines should have the same speed regulation characteristics and the governors should be adjusted to give the same speed regulation.

Before operating generator sets in parallel, each set should be checked by starting, operating and adjusting the sets as individual units before attempting paralleling.

INSTALLATION

PARALLELING OPERATIONS
THYRISTOR OR SILICON CONTROLLED RECTIFIER LOADING

REACTIVE LOAD CONTROL

When two identical generators are operating together in parallel and an unbalance occurs in field excitation, circulating currents begin to flow between the generators. This current will appear as a lagging power factor or inductive load to the highly excited generator, and as a leading power factor or capacitive load to the generator with the lower field current. This is known as the reactive circulating current and there are two methods of controlling it in parallel operation:

1. Reactive droop compensation. (Formerly known as parallel droop compensation.)

   The bus voltage droops, or decreases, as the reactive lagging power factor load is increased.

2. Reactive differential compensation. (Formerly known as cross current compensation.)

   The reactive differential compensation circuit allows parallel generators to share reactive loads with no decrease or droop in generator voltage. The RDC circuit must meet the following criteria:

   A. All paralleling current transformers for all the generators being paralleled must be included in the secondary interconnection loop.

   B. When different size generators are paralleled, all paralleling current transformers must have the same or proportional ratios that give approximately the same secondary current.

   C. Voltage regulator paralleling circuitry must be the same.

   D. Current transformer secondaries and the generator lines must be isolated electrically.

      Because of the above criteria, reactive differential compensation cannot be used when paralleling with the utility power grid. There is no limit, however, in the number of generators that can be included in this type of circuit.

   E. It is also desirable to have an auxiliary contact on the main generator breaker to short the parallel CT secondary when that breaker is open (not connected to the load buss).

PARALLELING CIRCUITRY

Because of the number of variables involved in paralleling generator sets, every installation will have its own circuitry and methods or procedures of bringing paralleled units on line. There are numerous ways of connecting paralleled units and an almost unlimited variety of applications and associated equipment.

When parallel operation is desired, it is important that the control manufacturer, the generator manufacturer and the systems engineer work together to insure the proper selection of all components. Please refer to Marathon Electric for application assistance.

THYRISTOR OR SILICON CONTROLLED RECTIFIER LOADING

Solid state electronic control devices which utitize thyristors or SCR firing circuits (such as variable frequency induction motor controls, precision motor speed controls, no-break powered battery chargers, etc.) can introduce high frequency harmonics which adversely affect or distort the normal waveform of the generator. This creates additional heat in the generator stator and rotor, and can cause overheating. These devices can and do present problems to non-utility power generating equipment or any limited power buss system. The problems which can occur are not limited to the generator itself, but can effect the solid state control devices, the equipment it controls, other associated loads, monitoring devices or a number of combinations over the entire system.

Magna One generators can supply some thyristor and SCR loads when properly applied. For a single thyristor (SCR) load, the maximum KVA load on the generator should be limited to about 60% of the generator rating. Where thyristor (SCR) loading is less than 30% of the total loading, derating of the generator is not normally required. It is important that the control manufacturer, the generator manufacturer and the systems engineer work together to insure the proper selection of all components. Please refer to Marathon Electric for application assistance.

OPERATION

PRE-START INSPECTION

Before operating the generator for the first time, the following checks are recommended.

1. Check all wiring against the proper connection diagrams and make sure all connections are properly insulated.
2. Inspect for any remaining packing materials and remove loose clothes and all tools.
3. Check that all covers and guards are installed and tight.

IDLING

Permanent equipment damage can be caused by idling the engine between 650 and 1400 generator rpm. If engine adjustments require idling at these speeds, the REGULATOR FUSES MUST BE REMOVED before engine start-up and adjustment.

WARNING

RESIDUAL VOLTAGE IS PRESENT AT THE GENERATOR LEADS AND AT THE REGULATOR PANEL CONNECTIONS, EVEN WITH THE REGULATOR FUSES REMOVED. CAUTION MUST BE OBSERVED OR SERIOUS PERSONAL INJURY OR DEATH CAN RESULT. CONSULT QUALIFIED PERSONNEL WITH ANY QUESTIONS.

If generator is supplied with the optional regulator power "off-on" switch, simply turn the switch to the "off" position; or if supplied with the optional underfrequency module, the regulator is protected. WHEN IN DOUBT, REMOVE THE FUSES. After engine adjustment, the regulator fuses should be replaced. The engine should be brought through the 650-1400 rpm range in less than 45 seconds.

VOLTAGE ADJUSTMENTS

A means for adjusting the voltage is incorporated in the regulator. For details refer to the Voltage Regulator Manual applicable to this unit.

STARTING-UP THE GENERATOR

The following procedure should be followed for starting-up the generator set:

1. The generator output must be disconnected from the load. Be certain that the main circuit breaker is open.
2. Start the prime mover and adjust it for the proper speed. If unit is not frequency protected, remove the fuses.
3. If fuses have been removed, replace the fuses and adjust the voltage to the required value by means of the voltage adjust rheostat.
4. Close the main circuit breaker and apply the load.
5. Adjust engine speed at full load to 1800 rpm for 60 hertz, 1500 rpm for 50 hertz.
6. Before stopping the engine, remove the load by tripping the main circuit breaker.

FIELD FLASHING

The generator relies on residual voltage to start the generator action which in turn produces the rated voltage. If the generator fails to produce a voltage after it has come up to rated speed, it may be necessary to flash the field. This procedure must be done while the generator is at a standstill. See the Field Flashing Procedure for further information.

FIELD FLASHING PROCEDURE

With the generator set shut down, apply a 12 volt dc flashing source (battery) across terminals F+ and F- on the voltage regulator. The positive terminal of the battery must be connected to F+ and the negative terminal to F-. CAUTION: If these leads are reversed, the voltage regulator will be destroyed. A diode in the voltage regulator allows the flashing source to be removed from the field without the danger of inductive arcing. This action remagnetizes the exciter field and allows build-up when the system is restarted.

Katolight Service - Master Repair Manual - Page 897

OPERATION

PREVENTATIVE MAINTENANCE
CLEANING METHODS

PREVENTATIVE MAINTENANCE

Dirt and heat are common enemies of a generator. Keeping the generator clean, preventing overloads, and proper alignment of the generator and its prime mover will result in efficient operation.

Accumulations of dust and dirt not only contribute to insulation breakdown, but they can also increase temperature by restricting ventilation and by blocking the dissipation of heat from the winding and frame surfaces. Some machines are exposed to accumulations of materials such as talc, lint, or cement dust, which may obstruct the ventilation. The most harmful types of foreign materials include carbon black, metallic dust and chips, and similar substances which not only impede the ventilation, but also form a conductive film over the insulation, increasing the possibility of insulation failure. Machines operating in dirty places should be disassembled and cleaned periodically.

Dirt and dust will conduct electricity between points of different electrical potential. The regulator must be kept free of excessive amounts of dust and dirt. Low pressure, moisture-free compressed air may be used to blow out any dust and dirt.

CLEANING METHODS

When electrical components get dirty, the insulation must be cleaned. There are a number of acceptable methods for cleaning the generator, each of which will necessitate disassembly of the unit. The method of cleaning will be determined by the kind of dirt, and when the unit must be returned to service. Drying after cleaning is necessary.

Whenever the generator is disassembled, the windings should be given a thorough inspection and the insulation cleaned, if necessary. The inspection should cover the condition of the windings and insulation, and the effectiveness of the supporting ties as evidenced by the rigidity of the coil end turns.

SOLVENTS

It is recommended that only petroleum distillates be used for cleaning electrical components.

A solvent is usually required to remove accumulated soil containing oil or grease. A wet rag with solvent is suitable for wiping.

Dry components thoroughly with moisture-free, low pressure compressed air.

CAUTION: CARE MUST BE TAKEN NOT TO GET SOLVENT ON INSULATING VARNISHES OR DETERIORATION OF VARNISH WILL OCCUR.

Petroleum solvents of the safety type should be used. The flash point of these solvents should be greater than 100° F (38° C).

WARNING

ADEQUATE VENTILATION MUST BE AVAILABLE TO AVOID FIRE, EXPLOSION AND HEALTH HAZARDS WHERE SOLVENTS ARE USED. AVOID BREATHING SOLVENT VAPORS. RUBBER GLOVES OR OTHER SUITABLE PROTECTION FOR THE HANDS SHOULD BE USED.

CLOTH AND COMPRESSED AIR

Cleaning with a dry cloth may be satisfactory when components are small, the surfaces are accessible and only dry dirt is to be removed.

Blowing dirt out with compressed air is usually effective particularly when the dirt has collected in places which cannot be reached with a cloth. Use clean dry air at 30 PSI (206 KPA).

BRUSHING AND VACUUM CLEANING

Dry dust and dirt may be removed by brushing with bristle brushes followed by vacuum cleaning. Do not use wire brushes. Vacuum cleaning is an effective and desirable method of removing dry and loose dirt.

SHELL BLASTING

Air blasting with ground nut shells may be satisfactory for removal of hand dirt deposits from insulation. Use mild abrasives such as 12-20 mesh ground walnut shells.

DRYING ELECTRICAL INSULATION

Electrical components, after cleaning, storing or shipping must be dried before placing in operation if tests indicate that the insulation resistance is below a safe value. See approved drying procedures in the "Installation Section" of the manual.

DRYING ELECTRICAL INSULATION

Electrical components, after cleaning, storing or shipping must be dried before placing in operation if tests indicate that the insulation resistance is below a safe value. See approved drying procedures in the "Installation Section" of the manual.

AIR INTAKE AND EXHAUST

Check the area around the air intake and exhaust openings to be sure they are clean and unobstructed. Remove all foreign material and clean all screens.

ELECTRICAL CONNECTIONS AND WINDINGS

Inspect for loose or contaminated connections. Check wires for cracked or frayed insulation. Tighten connections and replace defective or oil soaked insulation.

If inspection shows that varnish coatings on the windings have deteriorated, they should be recoated with insulating varnish. Please refer to Marathon Electric for insulation system requirements.

LUBRICATION

All generators are lubricated before leaving the factory and are ready for operation. As a general rule, bearings should be relubricated annually or at the indicated intervals in table 1, whichever occurs first. Unusually severe operating conditions, such as high ambient or dusty environments, require more frequent lubrication (every six months or one half the table intervals, whichever occurs first). 360 Frame generators are premanently lubricated, and therefore regreasing is not necessary.

Use Cheveron SRI #2 or equivalent anti-friction type, high quality, grease with a lubrication temperature range of lowest ambient temperature expected to +260°F.

During an overhaul, the grease reservoir should be thoroughly cleaned and new grease added. The reservoir should be 1/3 to 1/2 filled with new grease.

To add or renew grease, proceed as follows:

1. Stop unit.
2. Wipe clean the grease plugs and surrounding parts.
3. Remove filler and drain plugs (see figure to right).
4. Insert 1/8" N.P.T. grease fitting or appropriate fitting in filler pipe.
5. Free drain hole of any hard grease, using a piece of wire if necessary.
6. Using a low pressure grease gun, add grease according to the amounts in table 1.
7. Start unit with drain plug removed - filler pipe may be open or closed. Allow unit to run 15 minutes to allow excess grease to drain.
8. Stop unit, wipe off any drained grease, and replace filler and drain plugs.

CAUTION: USE ONLY CLEAN GREASE FROM CLEAN, CLOSED CONTAINERS AND KEEP IT FROM BEING CONTAMINATED WHILE REGREASING.

The amount of grease added is very important! Only enough grease should be added to replace the grease used by the bearing.

CAUTION: TOO MUCH GREASE CAN BE AS HARMFUL AS INSUFFICIENT GREASE - USE THE PROPER AMOUNT.

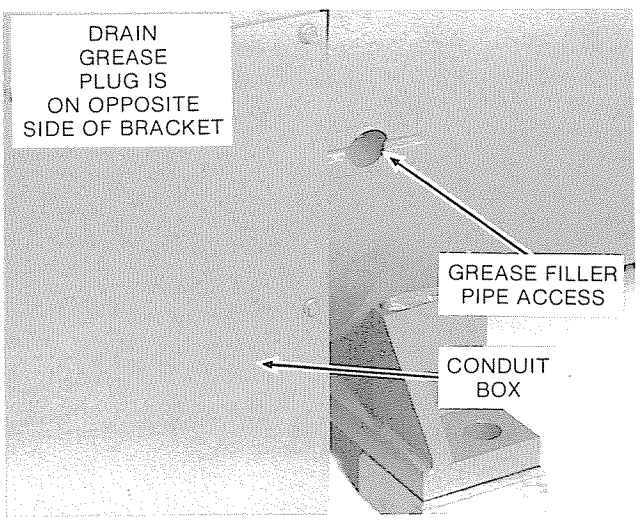

OPERATION

LUBRICATION

TABLE 1: RELUBRICATION AMOUNTS AND INTERVALS

	FRAME SIZE	BEARING SIZE	AMOUNT OF GREASE			INTERVALS①	
			OUNCES	CUBIC INCHES	TEASPOONS	60 HZ	50 HZ
SINGLE BEARING UNITS	440	312	1.0	1.8	5.8	7600	8800
	500, 502	314	1.2	2.1	7.0	6500	8400
	680, 682, 683	320	2.1	3.7	12.2	3800	5300
DOUBLE BEARING UNITS (SHAFT END BEARING ONLY)	440	318	1.7	3.0	9.9	4600	6200
	500, 502	318	1.7	3.0	9.9	4600	6200
	680, 682, 683	322	2.4	4.2	14.0	3000	4500

①HOURS OF RUNNING TIME

REMOVAL FROM PRIME MOVER

WARNING

DISCONNECT ALL POWER BEFORE SERVICING. FAILURE TO FOLLOW ALL SAFETY INSTRUCTIONS CAN RESULT IN SERIOUS PERSONAL INJURY OR DEATH.

1. Remove louvered conduit box cover. (See Figure 1).

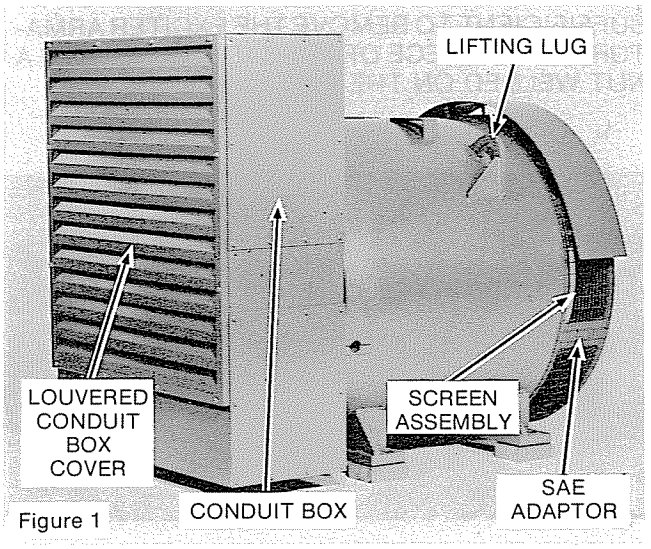

Figure 1

2. Disconnect all electrical load leads from the generator leads (or buss bars) inside the conduit box.
3. Remove all conduit or ducting from the conduit box.
4. Attach a suitable hoist to the generator lifting lugs.
5. a. For two-bearing generators, disconnect the coupling or sheave and belts between the generator and prime mover. (Follow the coupling manufacturer's instructions for disconnection.)

   b. For single bearing generators, remove the bolts mounting the screen assembly to the SAE adaptor and remove the screen. (See Figure 2.) (NOTE: Do not remove the dripcover from the screen assembly if so equipped.) Remove the capscrews attaching the drive discs to the flywheel and remove the capscrews attaching the SAE adaptor to the flywheel housing.

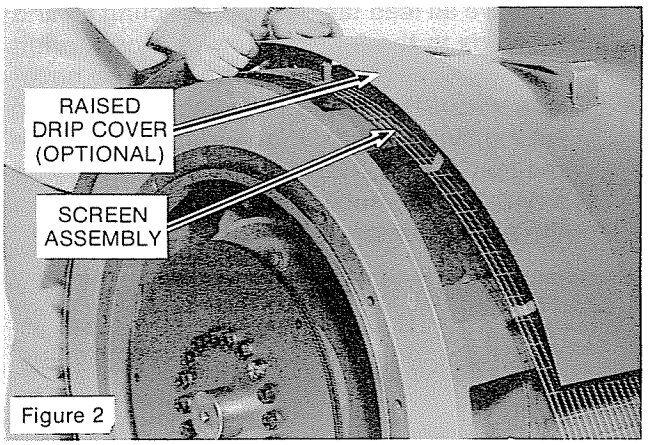

Figure 2

WARNING

DO NOT APPLY ANY FORCE TO THE GENERATOR FAN FOR LIFTING OR ROTATING THE GENERATOR ROTOR. DISREGARDING THESE INSTRUCTIONS MAY CAUSE PERSONAL INJURY OR EQUIPMENT DAMAGE.

6. Remove the mounting bolts which secure the generator to the base.
7. Raise the generator slightly and move the generator away from the prime mover.
8. On single bearing generators, if generator is to be shipped, see Shipping Instructions Section for proper rotor support.

EXCITER REMOVAL

1. Remove regulator enclosure and disconnect F1 and F2 leads from the corresponding F+ and F− terminals on the terminal block on the regulator panel. (See Figure 3).

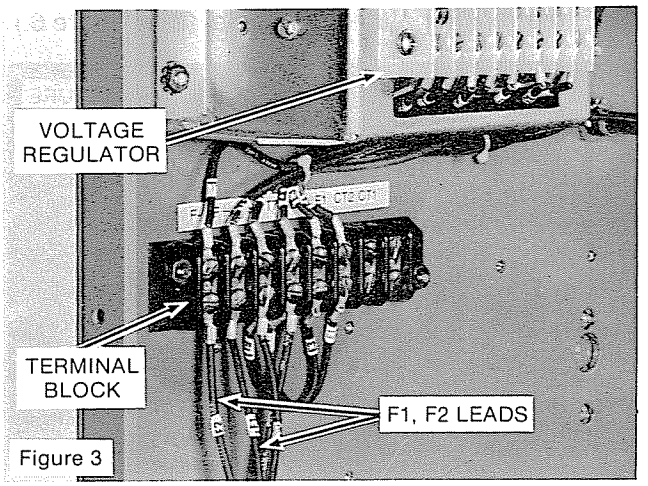

Figure 3

SERVICE

DISASSEMBLY

2. Remove all lead fasteners connecting F1 and F2 leads to the front end bracket or conduit box. Remove the four capscrews and belleville washers holding the exciter stator and lead shield in place. (See Figure 4.) Remove the lead shield. Mark the exciter stator "top front" for reference. (See Figure 5.) Remove the exciter stator.

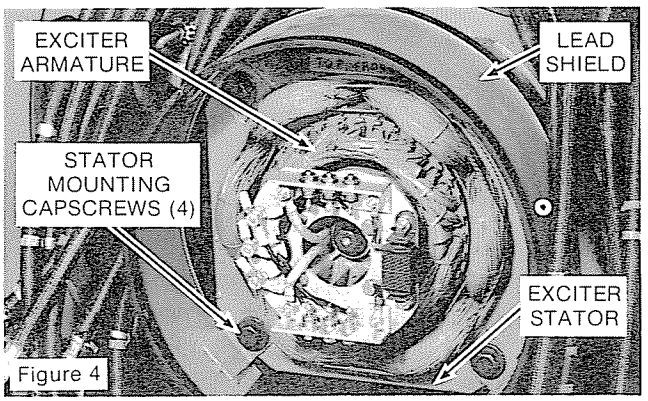

Figure 4

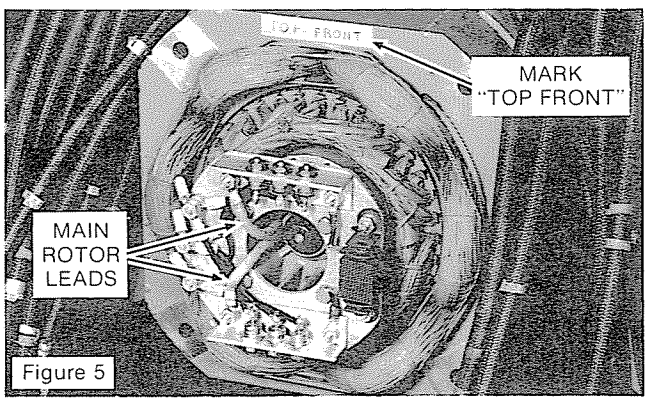

Figure 5

3. Disconnect both main rotor leads coming out of the aluminum standoff plate lead hole from the rectifier aluminum angle. (See Figure 6.)

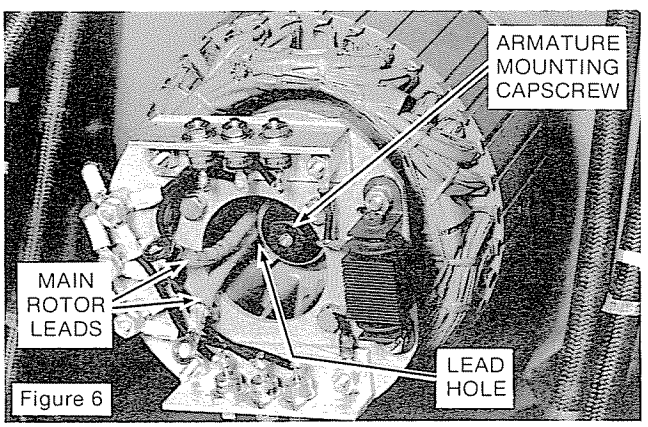

Figure 6

4. Remove the capscrew and belleville washer which holds the exciter (rotor) armature to the generator shaft. Use a six inch, 3/4 - 16NF capscrew threaded into the aluminum standoff plate to push against the end of the shaft. (See Figure 7.) Carefully feed the leads through the lead hole in the aluminum standoff plate as the armature is removed.

CAUTION: DO NOT TIGHTEN THE ARMATURE REMOVAL CAPSCREW BEYOND THE END OF THE THREADS. IF THE THREAD LENGTH IS NOT SUFFIFICIENT TO REMOVE THE EXCITER ARMATURE, USE A PIECE OF THREADED ROD WITH A NUT WELDED ON THE END.

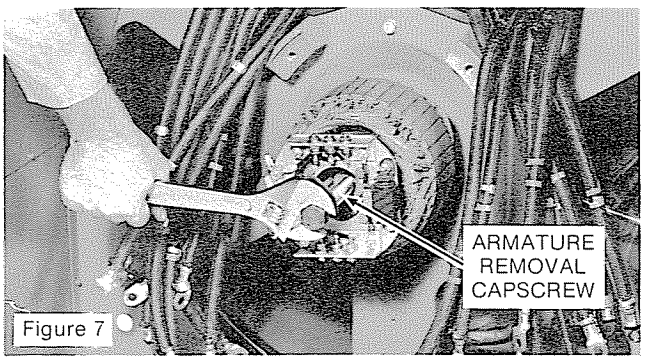

Figure 7

MAIN ROTOR REMOVAL

1. a. For two bearing generators, remove the two capscrews and lockwashers holding the bearing lock to the drive end bracket. On 680, 682 Frame generators, remove the two capscrews holding the bearing cap to the front end bracket. (See Figure 8.)

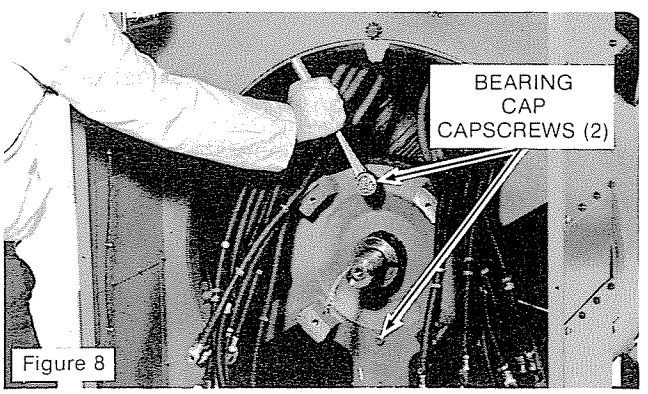

Figure 8

b. For single bearing 680, 682 Frame generators, remove the two capscrews holding the bearing cap to the front end bracket. (See Figure 8.)

2. If the screen assembly is still mounted, remove the bolts securing the screen assembly to the drive end bracket or the SAE adaptor and remove the screen assembly. (See Figure 9.) (NOTE: Do not remove the drip cover from the screen assembly if so equipped.)

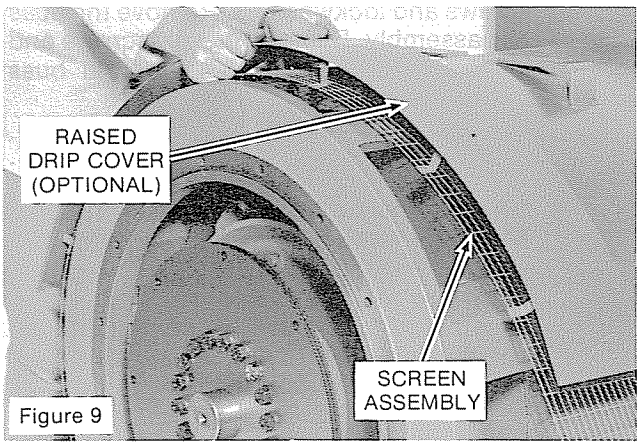

Figure 9

3. a. For two bearing generators, remove the drive coupling half or sheave from the shaft extension.

b. For single bearing generators, remove the capscrews and hardened washers holding the drive discs to the drive hub. (See Figure 10.) (NOTE: Capscrew removal can most easily be accomplished by starting at the bottom and removing the capscrews in a clockwise sequence.) Remove all drive discs (and spacers if any).

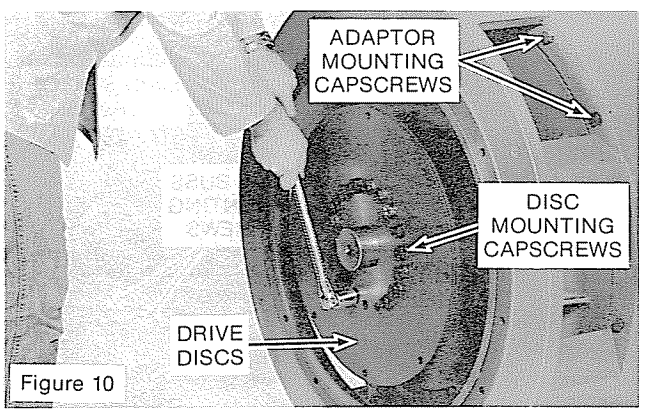

Figure 10

4. a. For two bearing generators, remove the capscrews holding the drive end bracket to the generator and remove the bracket.

b. For single bearing generators, remove the capscrews holding the SAE adaptor to the generator and remove the adaptor. (See Figure 11.)

CAUTION: ON LARGE GENERATORS, A HOIST AND LIFTING STRAP SHOULD BE USED TO ASSIST IN DRIVE END BRACKET OR SAE ADAPTOR REMOVAL.

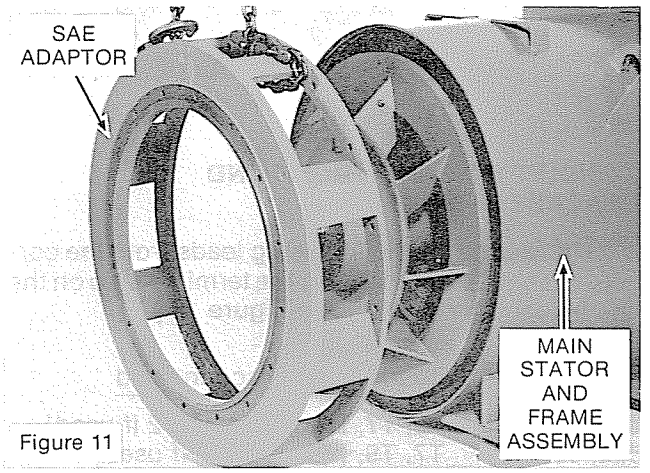

Figure 11

5. Using a rotor lifting fixture and a suitable hoist, carefully remove the rotor assembly from the main stator and frame assembly through the drive end. (See Figure 12.)

CAUTION: SPECIAL CARE SHOULD BE USED IN THE ROTOR ASSEMBLY REMOVAL, OR WINDING DAMAGE COULD RESULT.

WARNING

DO NOT APPLY ANY FORCE TO THE GENERATOR FAN FOR LIFTING OR ROTATING THE GENERATOR ROTOR. DISREGARDING THESE INSTRUCTIONS MAY CAUSE PERSONAL INJURY OR EQUIPMENT DAMAGE.

SERVICE

DISASSEMBLY

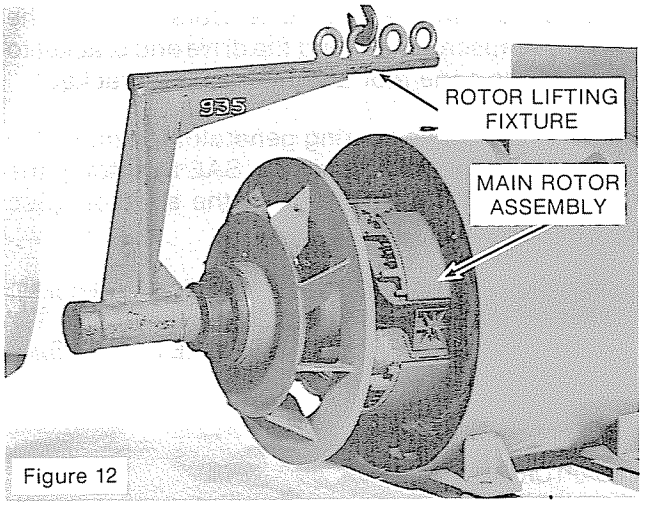

Figure 12

CONDUIT BOX AND FRONT END BRACKET REMOVAL

1. Disconnect the following leads from the corresponding points on the terminal strip on the regulator panel: (See Figure 13.)

Frame Size	Leads to be Disconnected
360, 440, 500	T0, T7, E3, [CT-1, CT-2 if used]
502, 680	T7, T9, [CT-1, CT-2 if used]
682	T0, T7 E1, E3, [CT-1, CT-2 if used]

NOTE: The above lead combinations are used on the standard generators; other leads may have to be removed depending on the particular application.

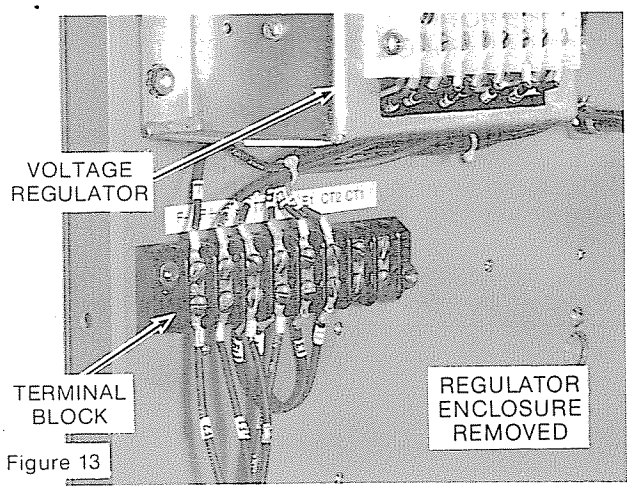

Figure 13

2. On generators with buss bars, disconnect all main stator leads bolted to the buss bar assembly, making sure all leads are marked for identification before removal. (See Figure 14.)

3. a. On generators with four buss bars (T1, T2, T3, T0), remove the capscrew, flat washer and lockwasher mounting the red insulating channel to the front end bracket. Remove the buss bar support mounting capscrews and lockwashers. Remove the buss bar assembly. Remove the capscrews and lockwashers mounting the neutral buss bar to the support.

   b. On generators with six buss bars (T1, T2, T3, T4, T5, T6), remove the capscrews and lockwashers mounting the buss bar support to the front end bracket. Remove the buss bar assembly (T1, T2 and T3). The neutral buss bar assembly (T4, T5 and T6) can remain in the bottom of the conduit box.

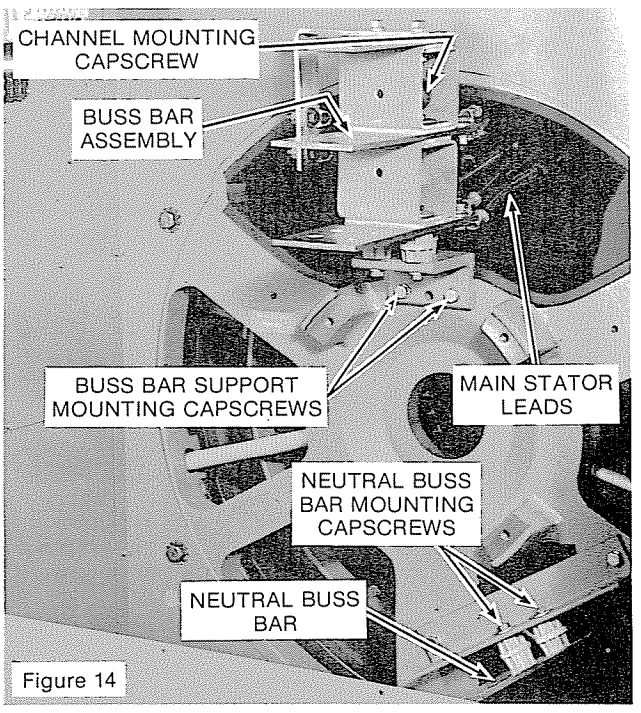

Figure 14

4. Remove the capscrews and starwashers holding the conduit box and front end bracket to the main stator assembly. (See Figure 15.) Lift off the conduit box.

5. On 680, 682 Frame generators, remove the one additional mounting capscrew at the bottom of the front end bracket. (See Figure 16.)

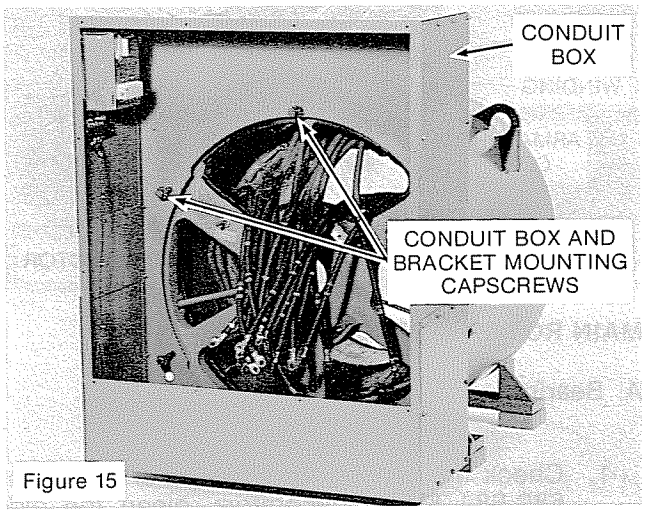

Figure 15

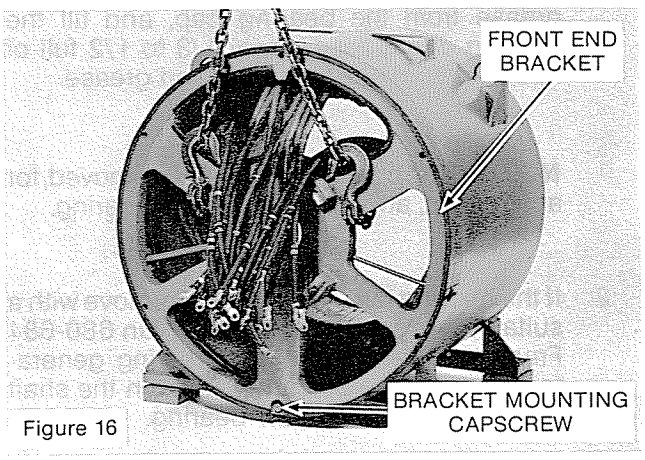

Figure 16

6. Remove the front end bracket from the main stator assembly. (See Figure 17.)

CAUTION: ON LARGE GENERATORS, A HOIST AND LIFTING STRAP SHOULD BE USED TO ASSIST IN THE FRONT END BRACKET REMOVAL.

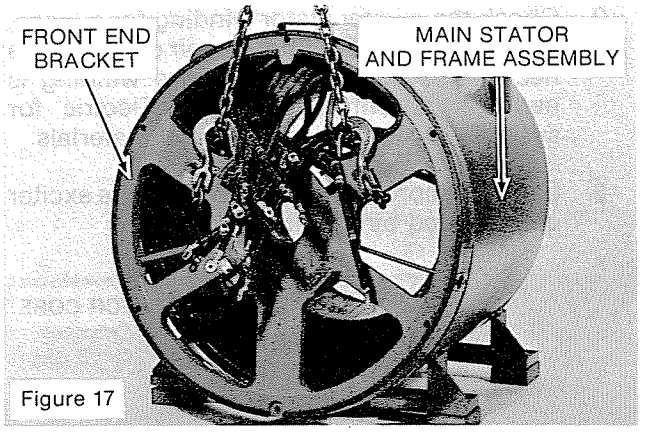

Figure 17

SERVICE

INSPECTION

EXCITER INSPECTION

A. Exciter Stator

1. Clean dust and dirt from the stator winding with a soft cloth or brush. (See Figure 18.) (See cleaning methods under Preventative Maintenance.)

2. Check the exciter stator winding for a loose, frayed, or burnt winding. Repair or replace as necessary. If field repair of the winding is necessary, contact Marathon Electric for special winding procedures and materials.

3. Look for score marks in the bore of the exciter core caused by rubbing.

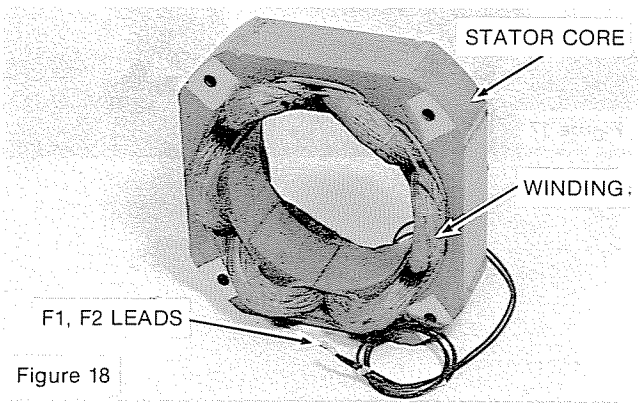

Figure 18

B. Exciter (Rotor) Armature

1. Clean all metal parts with an approved cleaning solvent.

2. Clean dust and dirt from the exciter armature and rectifier assembly with a soft cloth or brush. (See Figure 19.) (See cleaning methods.)

3. Check the exciter armature for burrs on the mating surfaces.

4. Check the rectifiers and surge protector for proper operation. (See Troubleshooting Section.) Replace defective parts.

5. Check the exciter armature and rectifier assembly for a loose, frayed, or burnt winding or loose connections. Repair or replace as necessary. If field repair of the winding is necessary, contact Marathon Electric for special winding procedures and materials.

6. Look for score marks on the outside diameter of the armature core caused by rubbing.

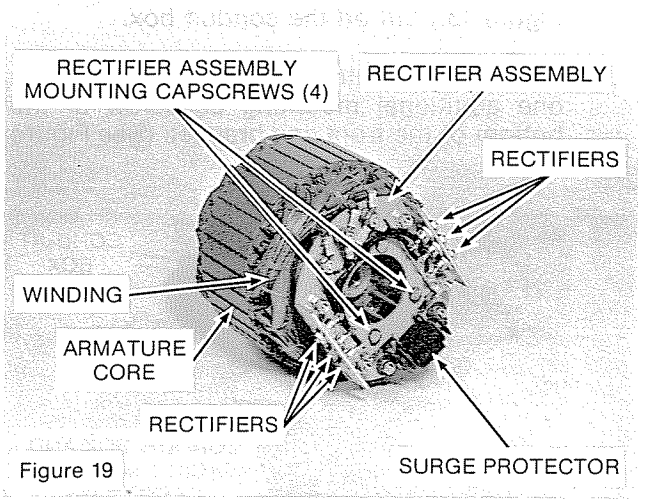

Figure 19

MAIN ROTOR INSPECTION

A. Bearing

1. Check the bearing for damage or wear. On 680-684 Frame generators, clean the old grease from the bearing cap, and fill the bearing cap grease cavity 1/3 to 1/2 full of new multipurpose lithium based grease.

NOTE: If the bearing needs to be removed, for any reason, always install a new bearing.

2. If the bearing is to be replaced, remove with a suitable puller. (See Figure 20.) On 680-684 Frame generators and two bearing generators, be sure the bearing cap is on the shaft before installing the new bearing.

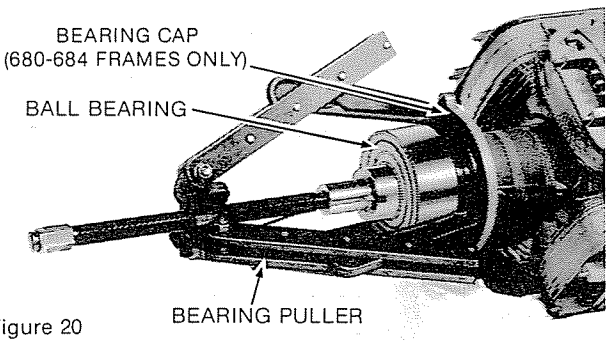

Figure 20

Heat the new bearing in an oven to a maximum temperature of 212° F (100° C). Apply a thin coat of clean lubricating oil to the press-fit area of the rotor shaft. Using asbestos gloves, install the bearing over the end of the shaft until it seats against the shaft shoulder. (See Figure 21.) The bearing should slide on the shaft and be seated without excessive force. If the bearing binds on the shaft before being fully seated, a piece of tubing, slightly larger than the press-fit area, can be used to drive the bearing into place. Using light taps with a soft mallet, apply pressure to the inner race only.

CAUTION: UNDER NO CIRCUMSTANCES SHOULD PRESSURE BE APPLIED TO THE OUTER RACE OF THE BEARING, AS PERMANENT BEARING DAMAGE COULD RESULT.

Allow the bearing to cool for one hour before attempting to assemble the generator.

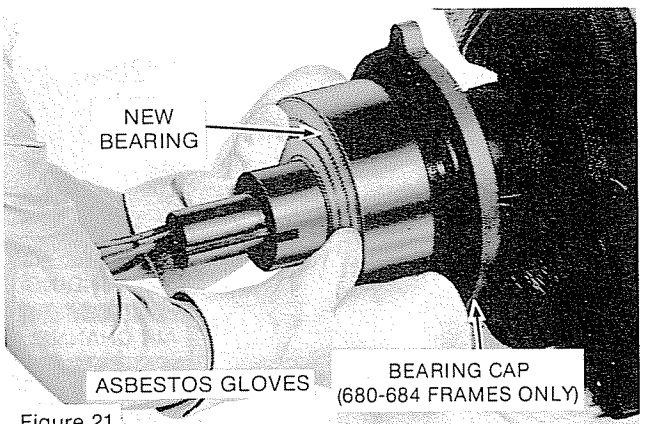

Figure 21

B. Drive Hub (Single Bearing Generators Only)

1. Check the drive hub for cracks or stripped drive disc mounting holes. Replace the hub if defective.

2. If the hub is to be replaced, mark the fan and hub for alignment to ensure proper balance after reassembly. Remove the fan mounting capscrews and belleville washers and move the fan back away from hub. (See Figure 22.) Install a suitable puller to the hub. Remove the setscrew in the hub over the key. Using a torch, rapidly heat the hub at the outer diameter while tightening the puller. (This must be done rapidly before the heat can expand the shaft.) Remove the hub. (Check the fan for defects according to Section C.)

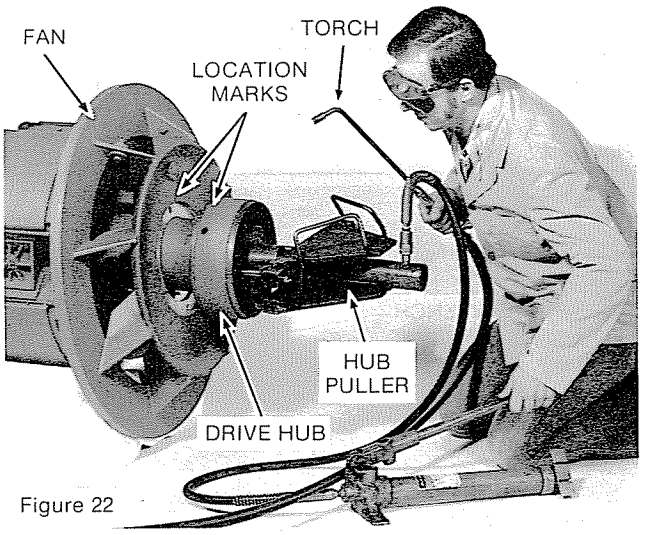

Figure 22

Mark the new hub in the same place as the old hub relative to the keyway. Heat the new hub in an oven to 500° -600° F (260° -316° C). Be sure that the fan is still on the shaft. Using asbestos gloves, slide the hub over the key in the shaft until it seats against the shaft shoulder. (See Figure 23.)

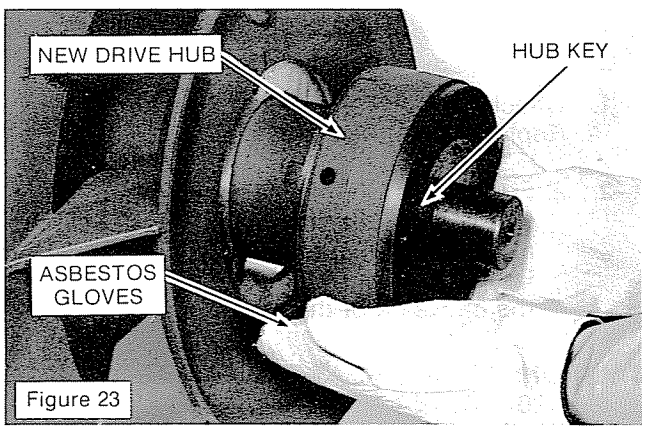

Figure 23

Allow the hub to cool for one hour. After the hub has cooled, tighten the setscrew in the hub to 50 ft-lbs (68 N.m) torque. Match the alignment marks on the fan and hub and mount the fan with the capscrews and belleville washers. (See Figure 24.) Torque the capscrews per Figure 49. (See Figure 25.)

SERVICE

INSPECTION

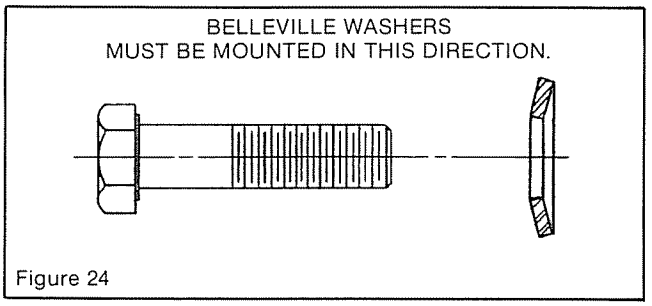

Figure 24

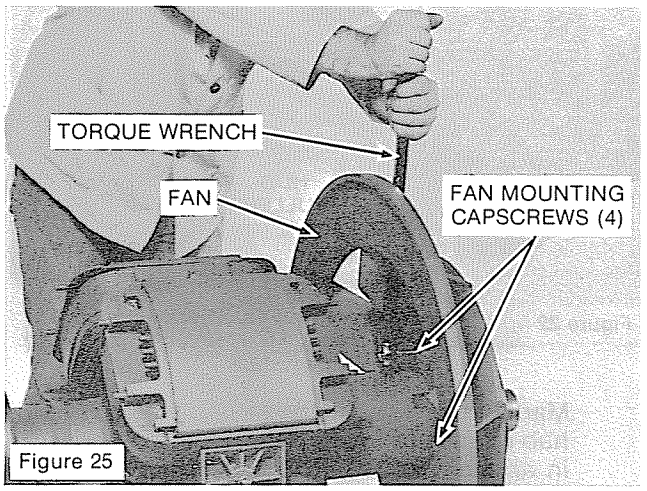

Figure 25

Rebalancing of the rotor assembly is not necessary if only the hub is replaced and the fan is mounted in the same location relative to the hub.

C. Fan

1. Check the fan for cracks or broken blades. Replace the fan if defective.

2. a. For two-bearing generators, remove the drive end bearing cap. (See bearing removal instructions above.) Remove the fan setscrews. Using a torch, rapidly heat the backside of the fan.

CAUTION: DO NOT HEAT THE FAN ABOVE 400-500° F (204-260° C) AS THIS WILL REMOVE THE TEMPER FROM THE FAN.

Using asbestos gloves, slide the fan off the shaft. Heat the new fan in an oven to 400° - 500° F (204° -260° C). Using asbestos gloves, slide the fan over the key in the shaft until it seats against the shaft shoulder. Allow the fan to cool for one-half hour. After the fan has cooled, tighten the setscrews in the fan to 17 ft-lbs (23 N.m) torque. Install the bearing cap and a new bearing according to the bearing assembly instructions above.

b. For single bearing generators, remove the hub according to the above drive hub removal instructions. Slide the fan off the shaft. Slide the new fan on the shaft making sure the fan mounting surface is toward the drive hub. Mount the hub according to the drive hub assembly instructions above. Mount the fan to the drive hub with the cap-screws and belleville washers (see Figure 24). Torque the capscrews per Figure 49. (See Figure 25.)

3. The rotor assembly must be rebalanced if a new fan has been installed.

D. Main Rotor Core and Windings

1. Clean all metal parts with an approved cleaning solvent. Remove dust and dirt from the rotor windings with a soft cloth or brush. (See Figure 26.) (See cleaning methods.)

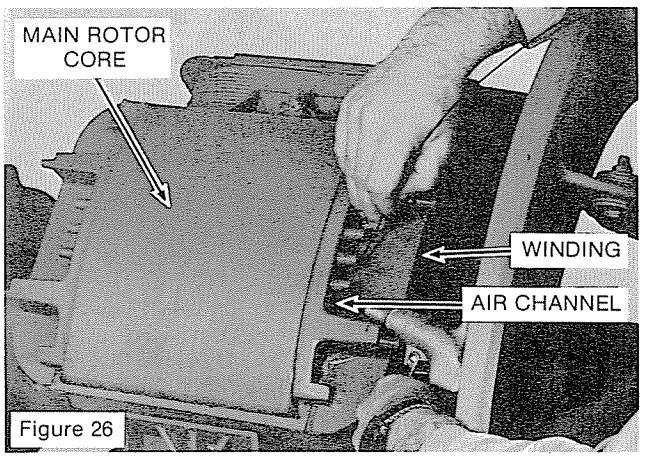

Figure 26

Remove any accumulated dust or dirt in the winding air channels with a piece of wire or with low-pressure, moisture-free air.

CAUTION: IF A PIECE OF WIRE IS USED FOR CLEANING THE AIR CHANNELS; CARE MUST BE TAKEN NOT TO SCRATCH THE WINDING AS THIS COULD CAUSE AN INSULATION FAILURE..

2. Check the rotor for loose, frayed, or burnt windings. A defective rotor winding must be rewound by Marathon Electric. The rotor assembly must be rebalanced after any rework or repair has been completed.

Katolight Service - Master Repair Manual - Page 908

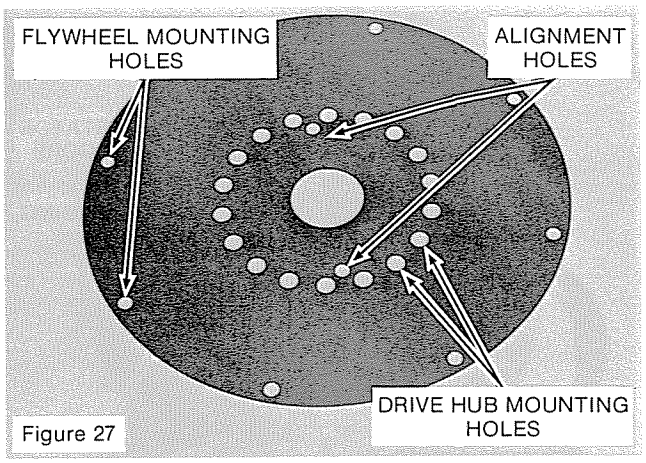

Figure 27

F. Drive Discs (Single Bearing Generators Only)

1. Inspect the drive discs for distorted or bent edges. (See Figure 27.) Inspect for worn mounting holes. Replace all defective discs as necessary.

2. Inspect the drive disc mounting capscrews for damaged threads. Replace capscrews if damaged.

FRONT END BRACKET INSPECTION

1. Remove the filler and drain grease pipes and the grease plugs from the bracket. (See Figure 28.)

2. Clean the end bracket, grease pipes, and capscrews in an approved solvent to remove all dust, dirt, and grease. Dry the parts thoroughly with compressed air.

3. Inspect the capscrews for stripped threads and replace if defective.

4. Inspect the end bracket for cracks and burred or rough mating surfaces. Inspect the bearing bore for burrs or wear. If the bracket shows excessive bearing bore wear, it should be replaced.

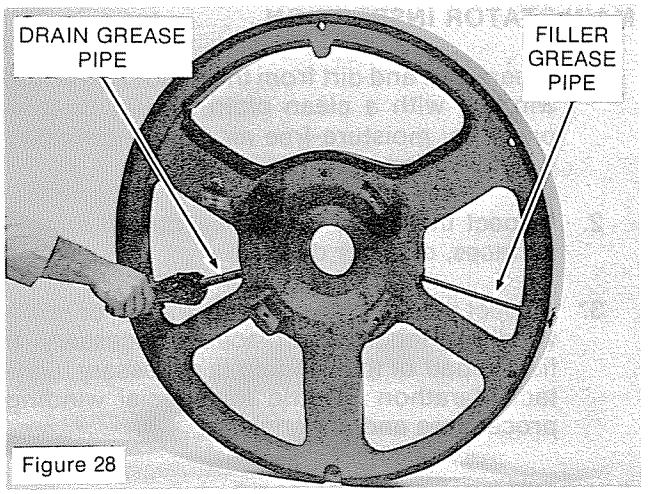

Figure 28

DRIVE END BRACKET OR SAE ADAPTOR INSPECTION

1. For two-bearing generators, remove the grease plugs from the bracket.

2. Clean the bracket or adaptor, capscrews and screen assembly in an approved solvent to remove all dust, dirt, and grease. (See Figure 29.) Dry the parts thoroughly with compressed air.

3. Inspect the capscrews for stripped threads and replace if defective.

4. Inspect the bracket or adaptor for cracks and burred or rough mating surfaces.

5. For two-bearing generators, inspect the bearing bore for burrs or wear. If the drive end bracket shows excessive bearing bore wear, it should be replaced.

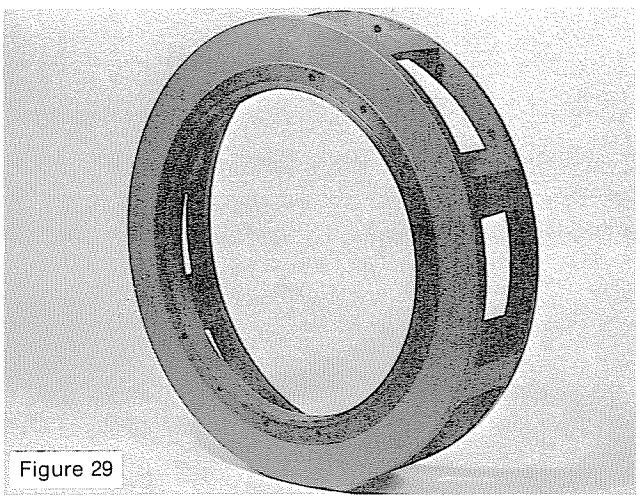
Figure 29

SERVICE

INSPECTION

MAIN STATOR INSPECTION

1. Clean dust and dirt from the stator frame and winding with a clean cloth, brush, or low-pressure, moisture-free air. (See Figure 30.) (See cleaning methods.)

2. Inspect the frame for cracks, burred mating surfaces, or other damage.

3. Inspect the stator for a loose, frayed, or burnt winding. Repair or replace as necessary. If field repair of the winding is necessary, contact Marathon Electric for special winding procedures and materials.

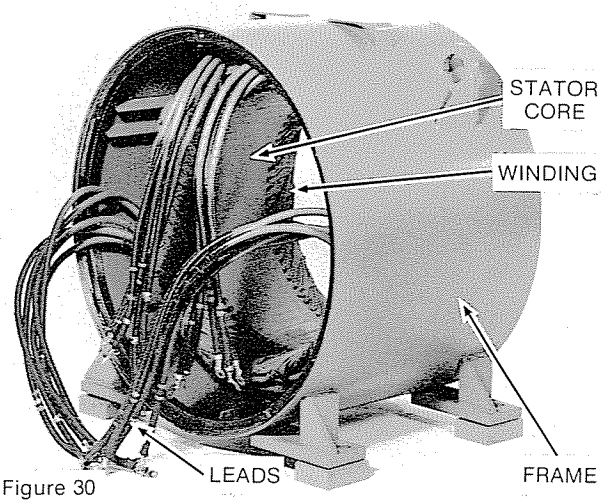

Figure 30

CONDUIT BOX AND VOLTAGE REGULATOR INSPECTION

1. Clean dust from the conduit box and the louvered cover with a clean cloth, brush, or low-pressure, moisture-free air. (See cleaning methods.)

2. Clean dust and dirt from the voltage regulator with a clean cloth, brush, or low-pressure, moisture-free air. (See cleaning methods.) Check all electrical connections for loose or broken wires.

CONDUIT BOX AND FRONT END BRACKET INSTALLATION

1. Fill the grease cavity of the front end bracket 1/3 to 1/2 full of new multipurpose lithium based grease. See "Lubrication Instructions" in this manual. Assemble all grease pipes and plugs in the bracket.
2. Install two guide pins in the main stator assembly frame. Align the bracket mounting holes to the guide pins and slide the bracket over the pins. (See Figure 31.) On 680, 682 Frame generators, install the bottom capscrew. (See Figure 32.)

CAUTION: ON LARGE GENERATORS, A HOIST AND LIFTING STRAP SHOULD BE USED TO ASSIST IN THE FRONT END BRACKET INSTALLATION.

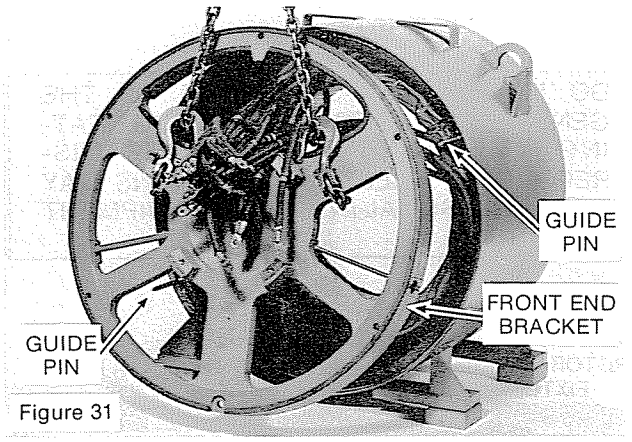

Figure 31

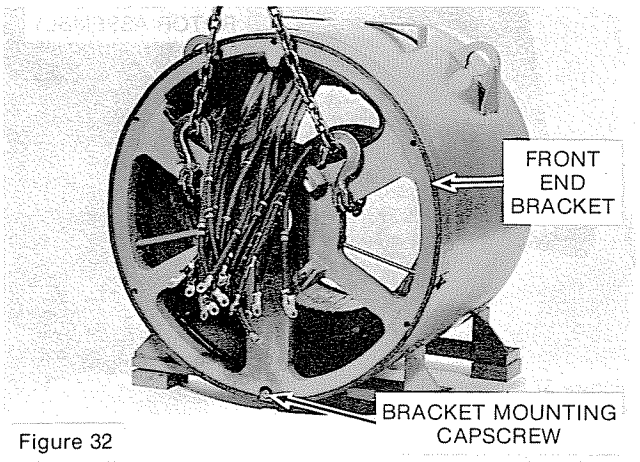

Figure 32

3. Insert two capscrews and starwashers through the conduit box and mount the conduit box to the bracket and main stator and frame assembly. (See Figure 33.) Remove the two guide pins and insert the remaining capscrews and starwashers.

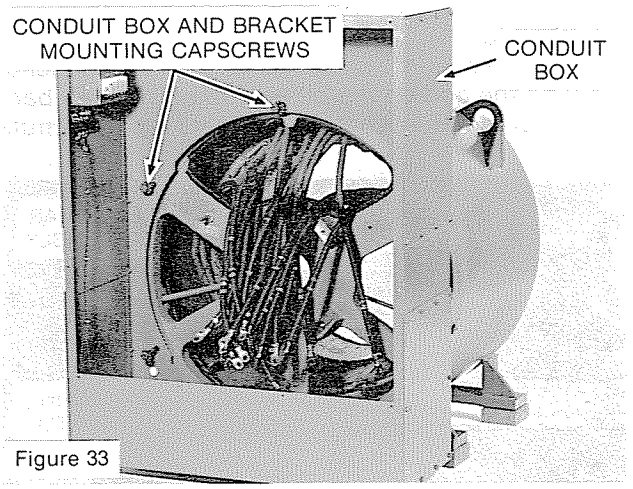

Figure 33

4. a. On generators with four buss bars (T1, T2, T3, T0), mount the neutral buss bar to the support with the capscrews and lockwashers. (See Figure 34.) Mount the buss bar assembly to the front end bracket with the capscrews and lockwashers. Assemble the capscrew, flat washer, and lockwasher through the red insulating channel into the front end bracket.

   b. On generators with six buss bars (T1, T2, T3, T4, T5, T6), mount the buss bar assembly support to the front end bracket with the capscrews and lockwashers.

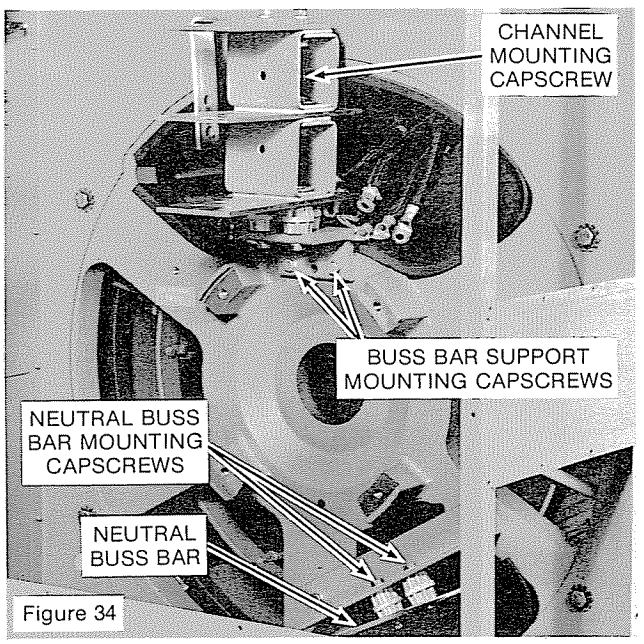

Figure 34

SERVICE

ASSEMBLY

5. On generators with buss bars, connect the main stator leads to the appropriate buss bar according to the lead markings. Insert a flat washer on the bolt, then assemble one terminal to the buss bar with the bolt and flat washer. (See Figure 35.) Insert a second lead on the bolt on the other side of the buss bar, then a flat washer, lockwasher, and locknut.

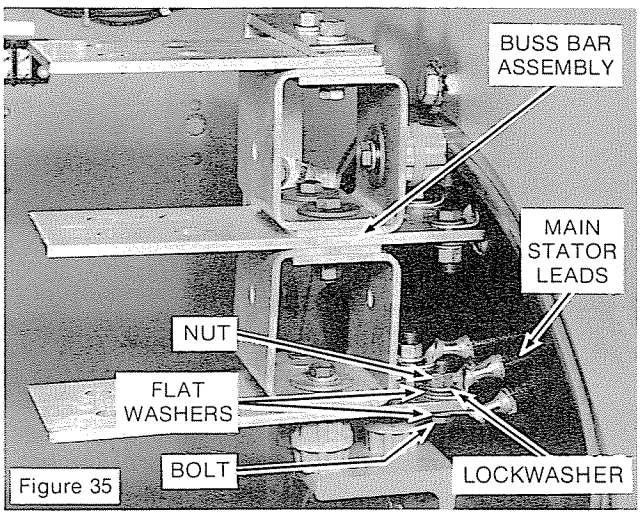

Figure 35

6. Connect the following leads to the corresponding points on the terminal strip on the regulator panel: (See Figure 36).

Frame Size	Leads to be Connected
360, 440, 500	T0, T7, E3, [CT-1, CT-2 if used]
502, 680	T7, T9, [CT-1, CT-2 if used]
682	T0, T7, E1, E3, [CT-1, CT-2 if used]

7. Install regulator enclosure.

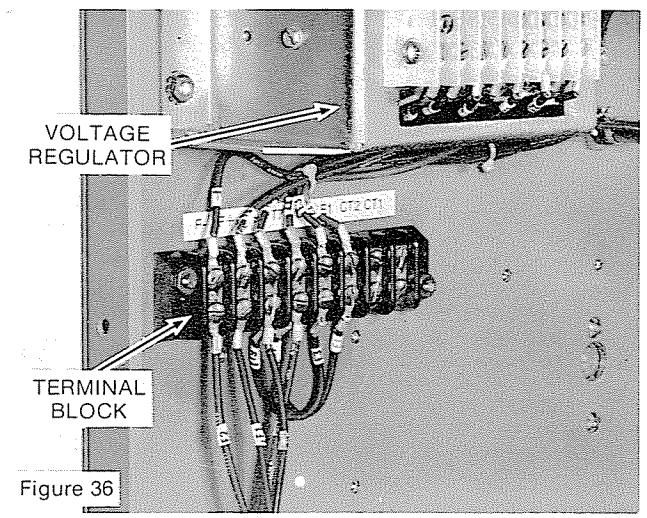

Figure 36

NOTE: These lead combinations are used on the standard generator; other leads may have to be reconnected depending on the particular application.

MAIN ROTOR INSTALLATION

1. Using a rotor lifting fixture and a suitable hoist, carefully install the rotor assembly into the main stator assembly through the drive end. (See Figure 37.) Carefully feed the rotor leads through the front end bracket shaft hole as the rotor is installed.

CAUTION: SPECIAL CARE SHOULD BE USED IN THE ROTOR ASSEMBLY INSTALLATION, OR WINDING DAMAGE COULD RESULT.

WARNING

DO NOT APPLY ANY FORCE TO THE GENERATOR FAN FOR LIFTING OR ROTATING THE GENERATOR ROTOR. DISREGARDING THESE INSTRUCTIONS MAY CAUSE PERSONAL INJURY OR EQUIPMENT DAMAGE.

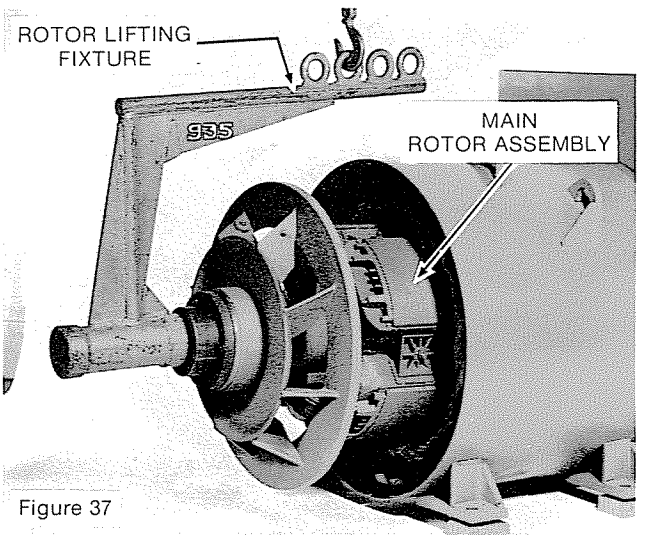

Figure 37

2. a. For two bearing generators, insert guide pins in the rear bearing lock holes. Fill the grease cavity of the drive end bracket 1/3 to 1/2 full of new miltipurpose lithium based grease. Assemble all grease plugs in the bracket. Mount the bracket on the bearing and guide the bearing lock pins through the bracket holes. Align the drive end bracket and mount with the capscrews. Remove one bearing lock guide pin and insert a capscrew and lockwasher into the bearing lock and tighten. Remove the remaining guide pin and replace with the remaining capscrew and lockwasher.

   b. For single bearing generators, pilot the SAE adaptor to the fan and secure to the main stator and frame assembly with capscrews torqued per Figure 49. (See Figure 38.) It may be necessary to raise the rotor assembly slightly to allow the mounting of the SAE adaptor.

CAUTION: ON LARGE GENERATORS, A HOIST AND LIFTING STRAP SHOULD BE USED TO ASSIST IN THE DRIVE END BRACKET OR THE SAE ADAPTOR ASSEMBLY.

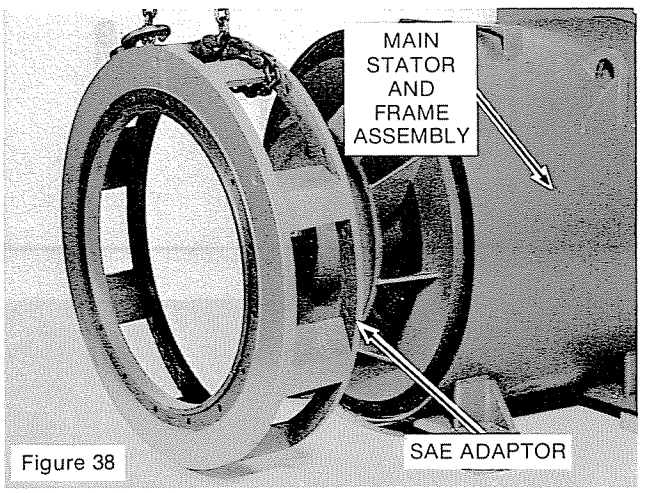

Figure 38

3. a. For two-bearing generators, install the drive coupling half or sheave on the shaft extension.

   b. For single bearing generators, insert a guide stud into the drive hub. Position all spacers (if any), then all drive discs, one at a time until all discs are installed. (See Figure 39.) Make sure that all disc mounting holes at the inner and outer diameter are properly aligned. Secure the discs with the capscrews and hardened washers torqued per Figure 49. (See Figure 40 for torquing sequence.)

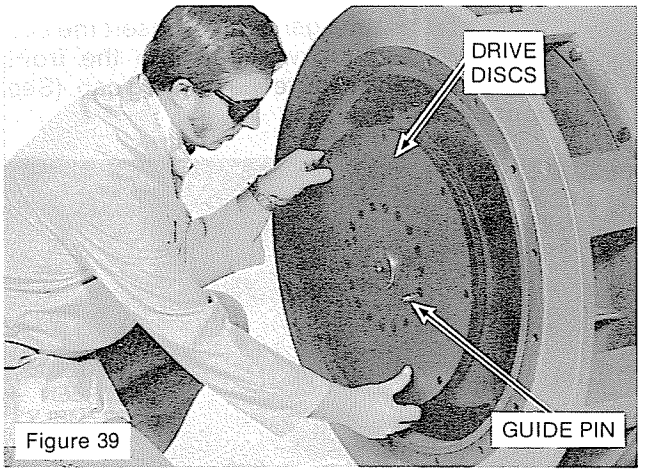

Figure 39

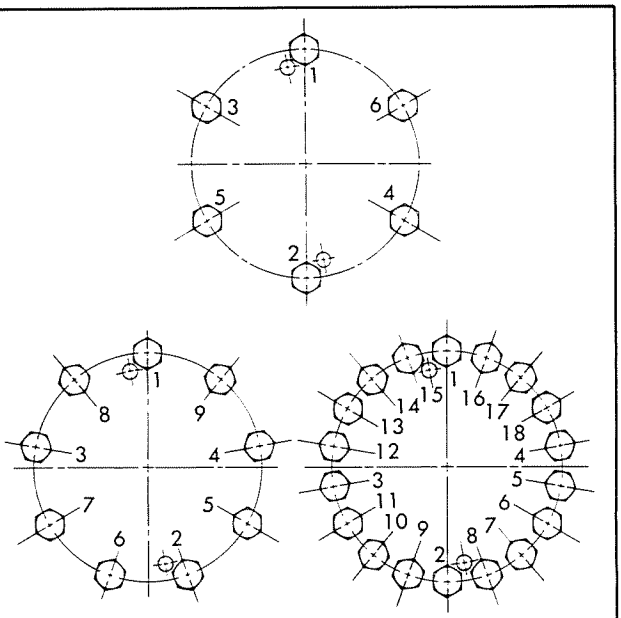

Torque the bolts in the above sequence according to the correct bolt pattern.

Then check the torque in each bolt in a clockwise direction around the bolt circle to insure that all the bolts are properly torqued.

Figure 40

SERVICE

ASSEMBLY

4. Mount the screen assembly on the drive end bracket or the SAE adaptor and tighten the bolts. (See Figure 41.)

5. On 680, 682 Frame generators, insert the two capscrews and lockwashers into the front end bracket and secure the bearing cap. (See Figure 42.)

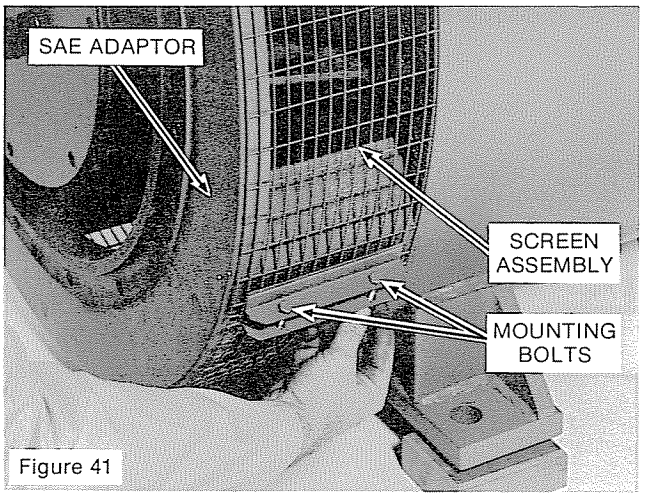

Figure 41

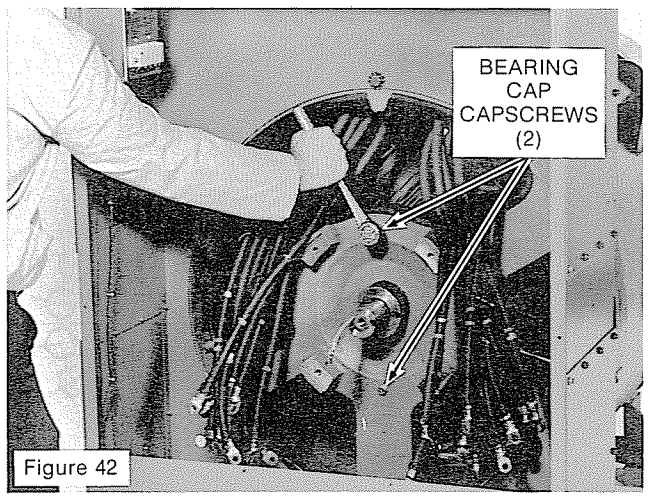

Figure 42

EXCITER INSTALLATION

1. Install the exciter key in the armature bore keyway. Attach a wire to the main rotor leads and feed the wire through the armature bore and out the lead hole in the aluminum standoff plate. Mount the armature on the end of the shaft and align the key in the armature bore to the keyway in the shaft. Slide the armature on the shaft while feeding the main rotor leads through the lead hole in the aluminum standoff plate. (See Figure 43.)

Insert the capscrew and belleville washer (see Figure 44) through the mounting hole in the aluminum standoff plate and secure to the shaft (see Figure 45). Tighten the capscrew until the armature seats on the shaft. Torque the capscrew per Figure 49.

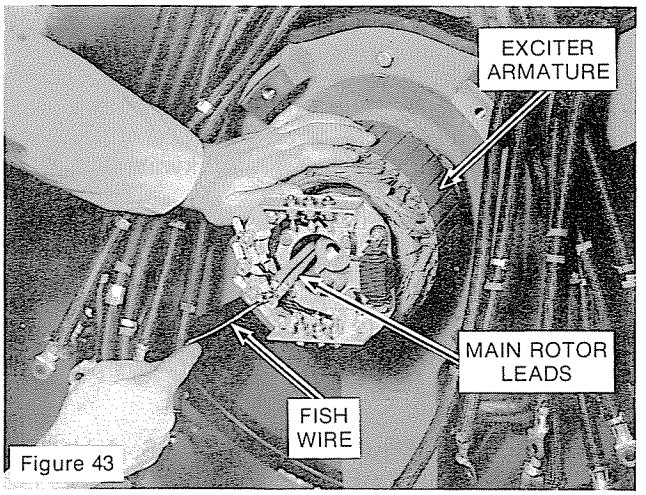

Figure 43

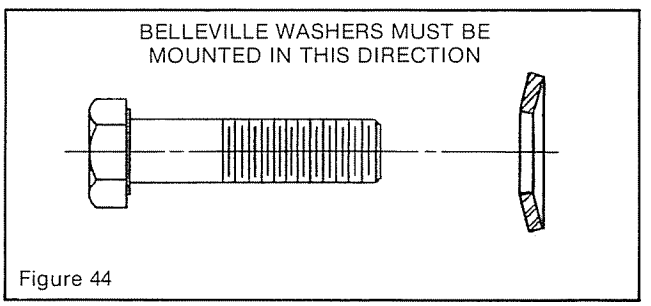

Figure 44

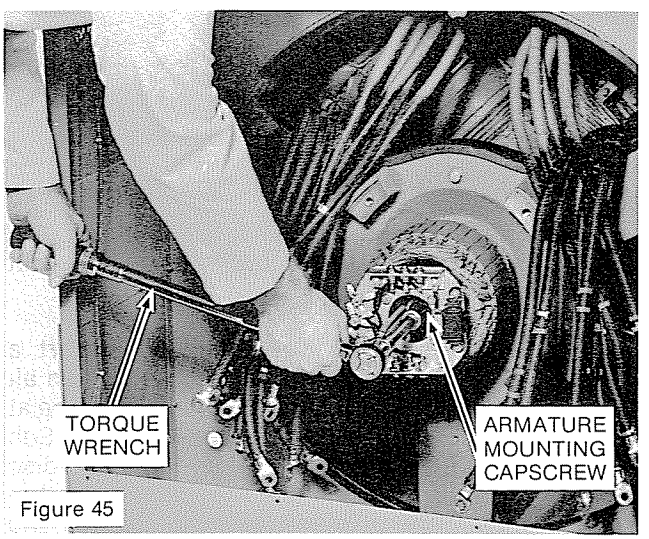

Figure 45

2. Connect both main rotor leads coming out of the aluminum standoff plate to the rectifier aluminum angle; one to each angle. (See Figure 46.)

3. Mount the exciter stator on the front end bracket mounting pads and align the mounting holes, noting the position of "top front" previously marked for reference (field leads at inside bottom). (See Figure 47.) Align the lead shield on the exciter stator and mount with the capscrews and belleville washers (see Figure 44). Torque the capscrews per Figure 49. Install new lead fasteners to secure F1 and F2 to the front end bracket and conduit box.

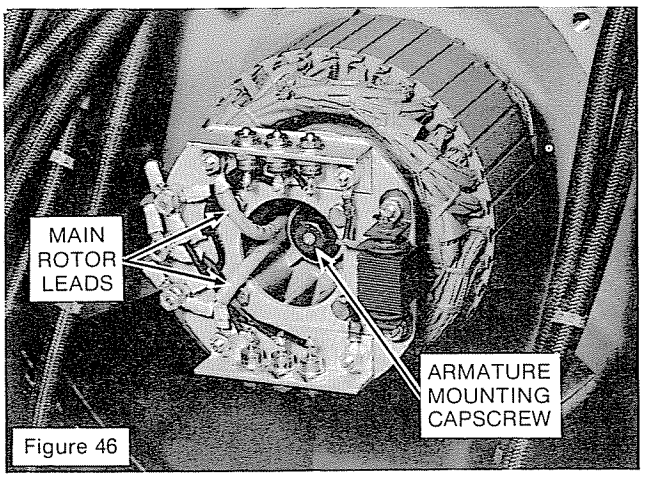

Figure 46

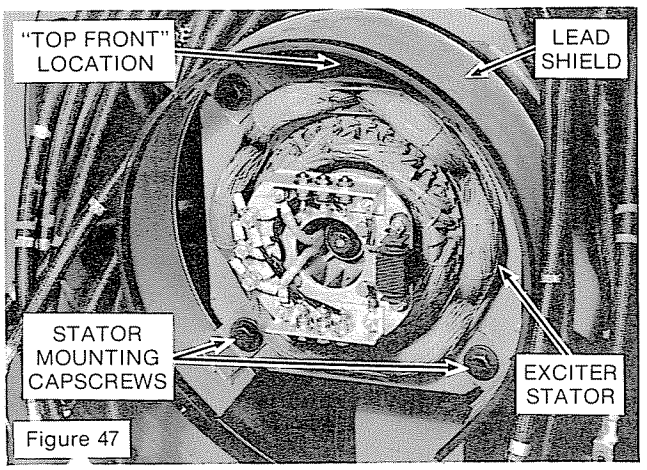

Figure 47

4. Connect the F1 and F2 leads to the corresponding F+ and F− terminals on the terminal block on the regulator panel and install the regulator enclosure. (See Figure 48).

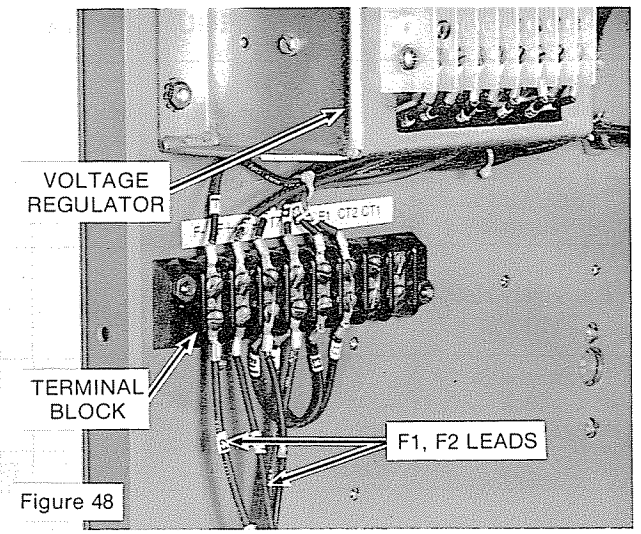

Figure 48

ASSEMBLY TO PRIME MOVER

1. Attach a suitable hoist to the generator lifting lugs, and move the generator until the generator foot mounting holes are aligned with the base and slightly above.

2. a. For two-bearing generators, align the coupling halves or sheaves between the generator and the prime mover by adding shims under the feet.

   b. For single bearing generators, if the screen assembly is mounted on the adaptor, remove the mounting bolts and remove the screen (see Figure 50). (NOTE: Do not remove the drip cover from the screen assembly if so equipped.) Insert two guide pins in the flywheel and two in the flywheel housing. Adjust the generator position until the drive discs are piloted in the flywheel. Remove the guide pins and secure the discs with Grade 8 place bolts and hardened washers or Grade 8 capscrews and heavy series lockwashers. (Torque per Figure 49.)

WARNING

DO NOT APPLY ANY FORCE TO THE GENERATOR FAN FOR LIFTING OR ROTATING THE GENERATOR ROTOR. DISREGARDING THESE INSTRUCTIONS MAY CAUSE PERSONAL INJURY OR EQUIPMENT DAMAGE.

SERVICE

ASSEMBLY

FIGURE 49: CAPSCREW TORQUE VALUES

Capscrew Diameter and Ultimate Tensile Strength (PSI) [4]	To 1/2 - 69,000 PSI To 3/4 - 64,000 PSI To 1 - 55,000 PSI			To 3/4 - 120,000 PSI To 1 - 115,000 PSI			150,000 PSI		
SAE Grade Number	1 or 2			5			8		
Capscrew Head Markings									
Capscrew Body Size (Inches) - (Thread)	Torque Ft-Lb (N-m)			Torque Ft-Lb (N-m)			Torque Ft-Lb (N-m)		
	Dry [1]	Oiled [2]	Plated [3]	Dry [1]	Oiled [2]	Plated [3]	Dry [1]	Oiled [2]	Plated [3]
1/4 - 20	5 (7)	4.5 (6)	4 (5)	8 (11)	7 (9)	6 (8)	12 (16)	11 (15)	10 (14)
- 28	6 (8)	5.4 (7)	4.8 (6)	10 (14)	9 (12)	8 (11)	14 (19)	13 (18)	11 (15)
5/16 - 18	11 (15)	10 (14)	9 (12)	17 (23)	15 (20)	14 (19)	24 (33)	22 (30)	19 (26)
- 24	13 (18)	12 (16)	10 (14)	19 (26)	17 (23)	15 (20)	27 (37)	24 (33)	22 (30)
3/8 - 16	18 (24)	16 (22)	14 (19)	31 (42)	28 (38)	25 (34)	44 (60)	40 (54)	35 (47)
- 24	20 (27)	18 (24)	16 (22)	35 (47)	32 (43)	28 (38)	49 (66)	44 (60)	39 (53)
7/16 - 14	28 (38)	25 (34)	22 (30)	49 (66)	44 (60)	39 (53)	70 (95)	63 (85)	56 (76)
- 20	30 (41)	27 (37)	24 (33)	55 (75)	50 (68)	44 (60)	78 (106)	70 (95)	62 (84)
1/2 - 13	39 (53)	35 (47)	31 (42)	75 (102)	68 (92)	60 (81)	105 (142)	95 (129)	84 (114)
- 20	41 (56)	37 (50)	33 (45)	85 (115)	77 (104)	68 (92)	120 (163)	108 (146)	96 (130)
9/16 - 12	51 (69)	46 (62)	41 (56)	110 (149)	99 (134)	88 (119)	155 (210)	140 (190)	124 (168)
- 18	55 (75)	50 (68)	44 (60)	120 (163)	108 (146)	96 (130)	170 (230)	153 (207)	136 (184)
5/8 - 11	83 (113)	75 (102)	66 (89)	150 (203)	135 (183)	120 (163)	210 (285)	189 (256)	168 (228)
- 18	95 (129)	86 (117)	76 (103)	170 (230)	153 (207)	136 (184)	240 (325)	216 (293)	192 (260)
3/4 - 10	105 (142)	95 (130)	84 (114)	270 (366)	243 (329)	216 (293)	375 (508)	338 (458)	300 (407)
- 16	115 (156)	104 (141)	92 (125)	295 (400)	266 (361)	236 (320)	420 (569)	378 (513)	336 (456)
7/8 - 9	160 (217)	144 (195)	128 (174)	395 (535)	356 (483)	316 (428)	605 (820)	545 (739)	484 (656)
- 14	175 (237)	158 (214)	140 (190)	435 (590)	392 (531)	348 (472)	675 (915)	608 (824)	540 (732)
1 - 8	235 (319)	212 (287)	188 (255)	590 (800)	531 (720)	472 (640)	910 (1234)	819 (1110)	728 (987)
- 14	250 (339)	225 (305)	200 (271)	660 (895)	594 (805)	528 (716)	990 (1342)	891 (1208)	792 (1074)

NOTES:
1. Based on use of clean, dry threads.
2. Torque reduced by 10% when engine oil is used as a lubricant.
3. Torque reduced by 20% if new plated capscrews are used.
4. Capscrews threaded into aluminum may require reductions in torque of 30% or more.

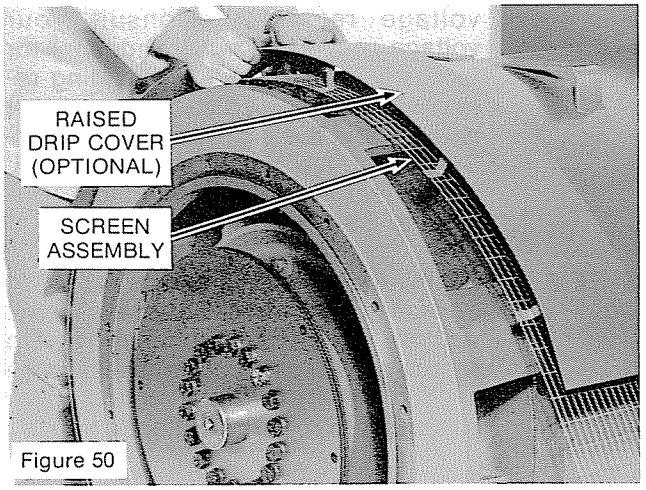

Figure 50

Position the generator so that the SAE adaptor mates with the flywheel housing.

CAUTION: DO NOT FORCE THE ALIGNMENT OF THE UNITS. SHIFT THE GENERATOR FROM SIDE TO SIDE OR RAISE OR LOWER WITH A LIFTING DEVICE AS NECESSARY.

It may be necessary to use shims under the mounting feet of either the generator or the prime mover to obtain proper alignment; use the same shims as removed under disassembly or proceed as follows: Using the extreme bottom four capscrews, mount the SAE adaptor to the flywheel housing. With a .0015 to .002 inch feeler gauge at the extreme top adaptor to flywheel housing to fit, raise the generator or lower the prime mover until the gauge is snug. Relieve just enough to release the feeler gauge and torque the remaining SAE adaptor capscrews to the flywheel housing.

Mount the screen assembly and tighten the mounting bolts.

3. Shim under the generator feet for proper support, ensuring that the generator mounting surfaces are level.

4. Install the mounting bolts which secure the generator to the mounting base.

5. For two bearing generators, assemble the coupling halves or sheave belts between the generator and the prime mover. (Follow the coupling manufacturer's instructions for assembly.)

6. Connect all existing conduit or ducting to the conduit box.

7. Connect all electrical load leads to the generator leads (or buss bars) inside the conduit box.

8. Check the exciter air gap (gap between the exciter armature and stator) by inserting a .010 inch feeler gauge in the gap and rotating it around the armature diameter to ensure that a minimum air gap is available. (See Figure 51.) If the feeler gauge cannot be rotated one full revolution, then check for a "cocked" exciter stator or loose stator mounting capscrews.

   NOTE: On single bearing units, the exciter air gap cannot be checked properly until the generator is mounted to the prime mover.

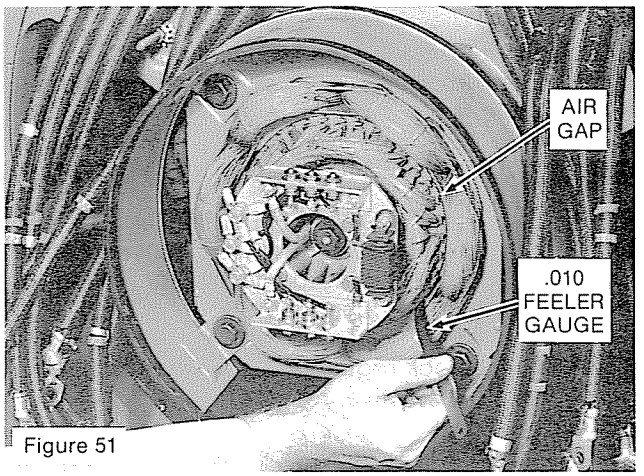

Figure 51

9. Mount the louvered conduit box cover.

10. Relubricate the bearing according to the lubrication instructions. (See Figure 52.)

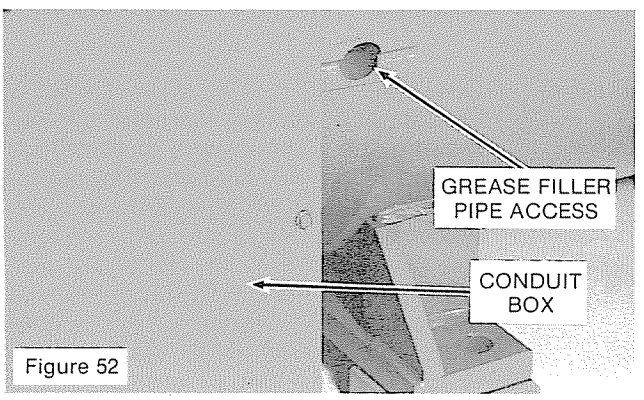

Figure 52

TROUBLE SHOOTING

GENERATOR PRODUCES NO VOLTAGE

THIS SECTION IS DIVIDED BY SYMPTOMS:

GENERATOR PRODUCES NO VOLTAGE

GENERATOR PRODUCES LOW VOLTAGE

GENERATOR PRODUCES HIGH VOLTAGE

GENERATOR VOLTAGE IS FLUCTUATING

WARNING

RESIDUAL VOLTAGE IS PRESENT AT THE GENERATOR LEADS AND AT THE REGULATOR PANEL CONNECTIONS, EVEN WITH THE REGULATOR FUSES REMOVED. CAUTION MUST BE OBSERVED OR SERIOUS PERSONAL INJURY OR DEATH CAN RESULT. CONSULT QUALIFIED PERSONNEL WITH ANY QUESTIONS.

NOTE: Always include the Model Number and Serial Number of your generator when corresponding with Marathon Electric

GENERATOR DOES NOT PRODUCE VOLTAGE

STEP 1 SHUT DOWN THE GENERATOR SET and remove conduit box cover. Check main generator leads for loose or broken connections.

STEP 2 Check regulator fuses with ohmmeter. If defective, replace.

STEP 3 Start up generator. Measure voltage at voltage regulator terminals 3 and 4. The voltmeter reading should exceed 5V ac. If it does, proceed to Step 4. If it does not, check continuity of wiring from connections 3 and 4 to the voltage source. If wiring is okay, — flashing is required. See the section on Field Flashing, page 15.

STEP 4 SHUT DOWN THE GENERATOR SET. Disconnect voltage regulator by removing the connections to terminals F+ and F- on the regulator. Connect a common 12 volt storage battery to the disconnected wires keeping polarity the same. Start up the generator set. With the generator at rated speed, read the voltage output of the unit on a voltmeter. Following these steps, if the reading is one-half or greater of the rated output when there is no load on the generator, the problem is in the voltage regulator. Consult your voltage regulator owner's manual for further information. If the reading remains near zero, the voltage regulator is okay, and the problem is further on. SHUT DOWN THE GENERATOR. Reconnect the voltage regulator. Proceed to Step 5.

STEP 5 Examine the rotating exciter for loose or broken lead wires. Be sure to check that all six rectifier connections are secure as well as all other wires on the exciter. Repair, replace or tighten as necessary. Proceed to Step 6.

STEP 6 Test each rectifier with an ohmmeter. Remove the bolted leadwire from one rectifier at the terminal stud. Test the resistance between the disconnected leadwire and the rectifier base. Make sure you have a good connection. Note the reading and reverse the ohmmeter probes. One reading should be high and the other low if the rectifier is good. If this is the case, reconnect that rectifier and proceed to the next, repeating the procedure until all six rectifiers have been checked. If the high and low readings are not achieved, the rectifier is defective and must be replaced. Torque the new rectifier to 20-30 in-lbs. Please note that two different types of rectifiers (with different polarities) are used on your unit. If all rectifiers are good, proceed to Step 7.

STEP 7 Locate the surge protector and disconnect one of the two bolted surge protector leads. With an ohmmeter, measure the resistance between the disconnected lead and the other surge protector terminal. Reverse the ohmmeter probes and repeat the test. If a high resistance is measured in both directions, proceed to Step 8. If resistance is low in one or both directions, replace the surge protector.

STEP 8 Check windings for continuity. If opens or shorts are found in the exciter armature or stator, replace the necessary component. If the condition is found in the main generator stator or rotor, major repair or generator replacement is probably required.

TROUBLE SHOOTING

NOTE: Always include the Model Number and Serial Number of your generator when corresponding with Marathon Electric

GENERATOR PRODUCES LOW VOLTAGE

STEP 1 Low voltage condition should be verified at the generator load leads with an auxiliary voltmeter.

STEP 2 SHUT DOWN THE GENERATOR SET and remove conduit box cover. Check main generator leads for correct connection.

STEP 3 Start up the generator set. Verify correct speed (1800 rpm at 60 Hertz and 1500 rpm at 50 Hertz) with a tachometer.

STEP 4 Make sure generator load does not exceed nameplate capacity. Verify this with a "clamp-on" ammeter on the main load leads. Current in any line must not exceed nameplate amps.

STEP 5 Adjust the range pot on the voltage regulator in the extreme clockwise direction to increase generator voltage as necessary.

STEP 6 Be sure the voltage adjust rheostat is adjusted, as necessary, to increase generator voltage.

STEP 7 SHUT DOWN THE GENERATOR SET. Check the sensing tap on the voltage regulator to be sure it is correct. On some applications, full line voltage is not used for regulatory sensing. Refer to the generator connection diagram.

STEP 8 Disconnect the voltage regulator by removing the connections to terminals F+ and F- on the regulator. Connect a common 12 volt storage battery to the disconnected wires keeping the polarity the same. Start up the generator set. With the generator at rated speed, read the voltage output of the unit on a voltmeter. Following these steps, if the reading is one-half or greater of the rated output when there is no load on the generator, the problem is in the voltage regulator. Consult your voltage regulator owners' manual for further information. If the reading remains near zero, the voltage regulator is okay and the problem is further on. SHUT DOWN THE GENERATOR SET. Reconnect the voltage regulator.

STEP 9 Test each rectifier with an ohmmeter. Remove the bolted leadwire from one rectifier at the terminal stud. Test the resistance between the disconnected leadwire and the rectifier base. Make sure you have a good connection. Note the reading and reverse the ohmmeter probes. One reading should be high and the other low if the rectifier is good. If this is the case, reconnect that rectifier and proceed to the next, repeating the procedure until all six rectifiers have been checked. If the high and low reading is not achieved, the rectifier is defective and must be replaced. Torque the new rectifier to 20-30 in-lbs. Please note that two different types of rectifiers (with different polarities) are used on your unit. If the rectifiers are good, proceed to Step 10.

STEP 10 Locate the surge protector and disconnect one of the two bolted surge protector leads. With an ohmmeter, measure the resistance between the disconnected lead and the other surge protector terminal. Reverse the ohmmeter probes and repeat the test. If a high resistance is measured in both directions proceed to Step 11. If resistance is low in one or both directions, replace the surge protector.

STEP 11 Check the windings for continuity. If opens or shorts are found in the exciter armature or stator, replace the necessary component. If the condition is found in the main generator stator or rotor, major repair or generator replacement is probably required.

Katolight Service - Master Repair Manual - Page 919

TROUBLE SHOOTING

GENERATOR PRODUCES HIGH VOLTAGE
GENERATOR VOLTAGE IS FLUCTUATING

NOTE: Always include the Model Number and Serial Number of your generator when corresponding with Marathon Electric

GENERATOR PRODUCES HIGH VOLTAGE

STEP 1 High voltage condition should be verified at the generator load leads with an auxiliary voltmeter.

STEP 2 SHUT DOWN THE GENERATOR SET and remove conduit box cover. Check main generator leads for correct connection.

STEP 3 Start up the generator set. Verify correct speed (1800 rpm at 60 Hertz and 1500 rpm at 50 Hertz) with a tachometer.

STEP 4 Adjust the range pot on the voltage regulator in the counterclockwise direction to decrease generator voltage as necessary.

STEP 5 Be sure the voltage adjust rheostat is adjusted as necessary, to reduce generator voltage.

STEP 6 SHUT DOWN THE GENERATOR SET. Check the sensing tap on the voltage regulator to be sure it is correct. On some applications, full line voltage is not used for regulator sensing. Refer to the generator connection diagram.

STEP 7 Check the polarity of the rectifiers on the rotating rectifier. All three rectifiers on each aluminum standoff should have the identical part number. Note, however, that two different types of rectifiers (with different polarities and different part numbers) are used on each aluminum angle.

STEP 8 Disconnect the voltage regulator by removing the connections to terminals F+ and F- on the regulator. Connect a common 12 volt storage battery to the disconnected wires keeping the polarity the same. Start up the generator set. With the generator at rated speed, read the voltage output of the unit on a voltmeter. If the reading is one-half or greater of the rated output when there is no load on the generator, the problem is in the voltage regulator. Consult the voltage regulator owners' manual for further information. Shut down the generator. Reconnect the voltage regulator.

GENERATOR VOLTAGE IS FLUCTUATING

STEP 1 Adjust voltage regulator stability clockwise for increased stability.

STEP 2 Verify engine governor performance with a tachometer to insure stable engine speed.

STEP 3 SHUT DOWN THE GENERATOR SET and remove conduit box cover. Check all wiring for loose connections. Be sure that voltage adjust rheostat is properly connected and working.

STEP 4 Disconnect voltage regulator by removing the connections to terminals F+ and F- on the regulator. Connect a common 12 volt storage battery to the disconnected wires keeping polarity the same. Start up the generator set. With the generator at rated speed, read the voltage output of the unit on a voltmeter. Following these steps, if the reading is one-half or greater of the rated output and does not fluctuate when there is no load on the generator, the problem is in the voltage regulator. Consult your regulator owners' manual for further information. If the reading continues to fluctuate, the problem is further on. Shut down the generator. Reconnect the voltage regulator. Proceed to Step 5.

STEP 5 Check windings for continuity. If opens or shorts are found in the exciter armature or stator, replace the necessary component. If the condition is found in the main generator stator or rotor, major repair or generator replacement is probably required.

Katolight Service - Master Repair Manual - Page 920

PARTS LIST

SINGLE BEARING GENERATOR PARTS LIST

NOTE: Always include the Model Number and Serial Number of your generator when corresponding with Marathon Electric

NOTE: Complete Main Rotor Assembly consists of items 7, 8, 9, 10 and 11.

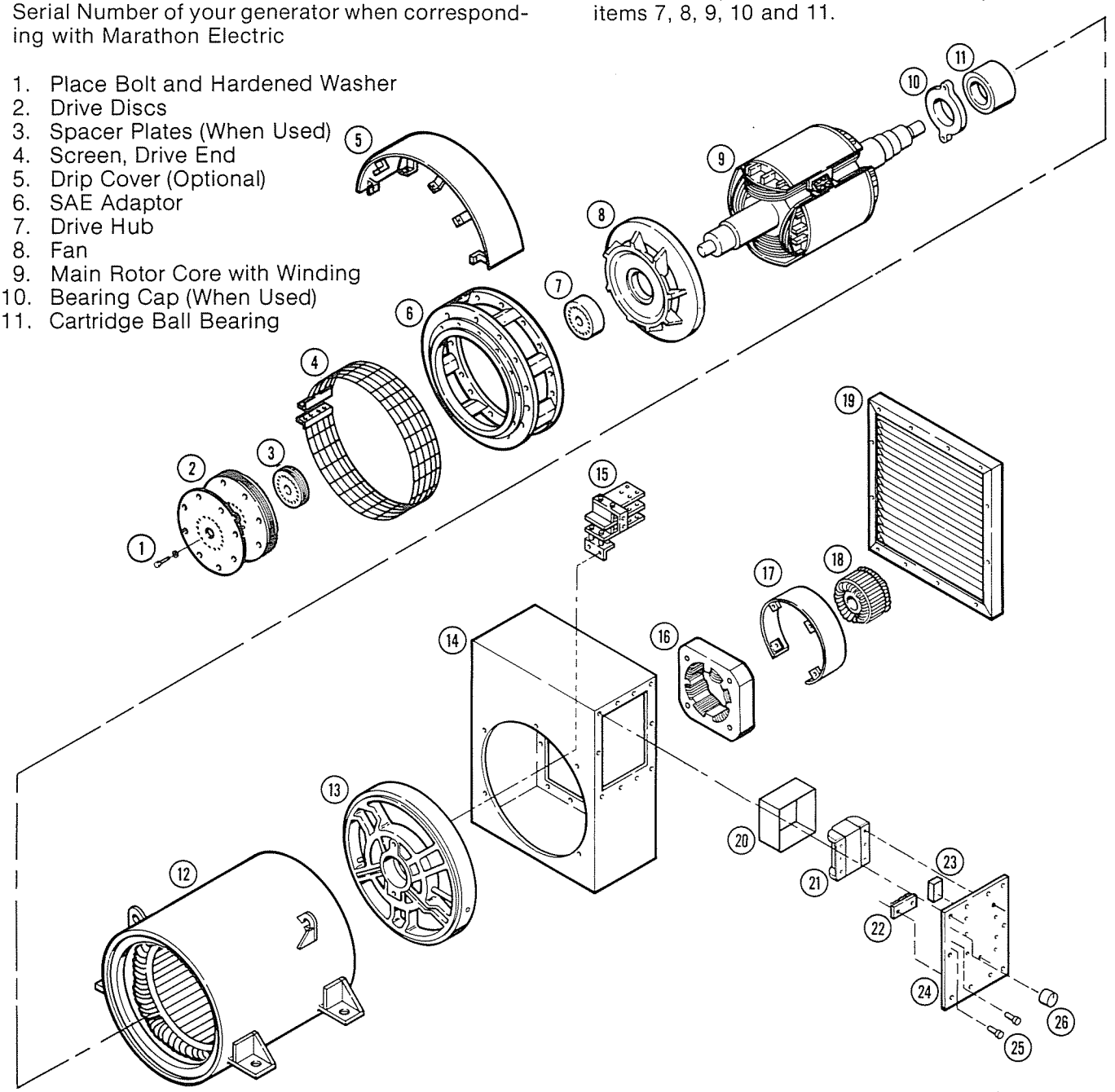

1. Place Bolt and Hardened Washer
2. Drive Discs
3. Spacer Plates (When Used)
4. Screen, Drive End
5. Drip Cover (Optional)
6. SAE Adaptor
7. Drive Hub
8. Fan
9. Main Rotor Core with Winding
10. Bearing Cap (When Used)
11. Cartridge Ball Bearing
12. Main Stator and Frame Assembly with Winding
13. Front End Bracket
14. Conduit Box
15. Buss Bar Assembly (When Used)
16. Exciter Stator Assembly with Winding
17. Lead Shield
18. Exciter (Rotor) Armature and Rectifier Assembly with Winding
19. Louvered Conduit Box Cover
20. Regulator Enclosure
21. Voltage Regulator
22. Terminal Block
23. Exciter Field Circuit Breaker
24. Regulator Panel
25. Fuses and Fuse Holders
26. Voltage Adjust Rheostat

PARTS LIST

EXCITER (ROTOR) ARMATURE, STATOR AND RECTIFIER ASSEMBLY

Rectifier Mounting Torque 20-30 inch-pounds.

NOTE: Always include the Model Number and Serial Number of your generator when corresponding with Marathon Electric

NOTE: Diodes have distinct polarity and can not be interchanged.

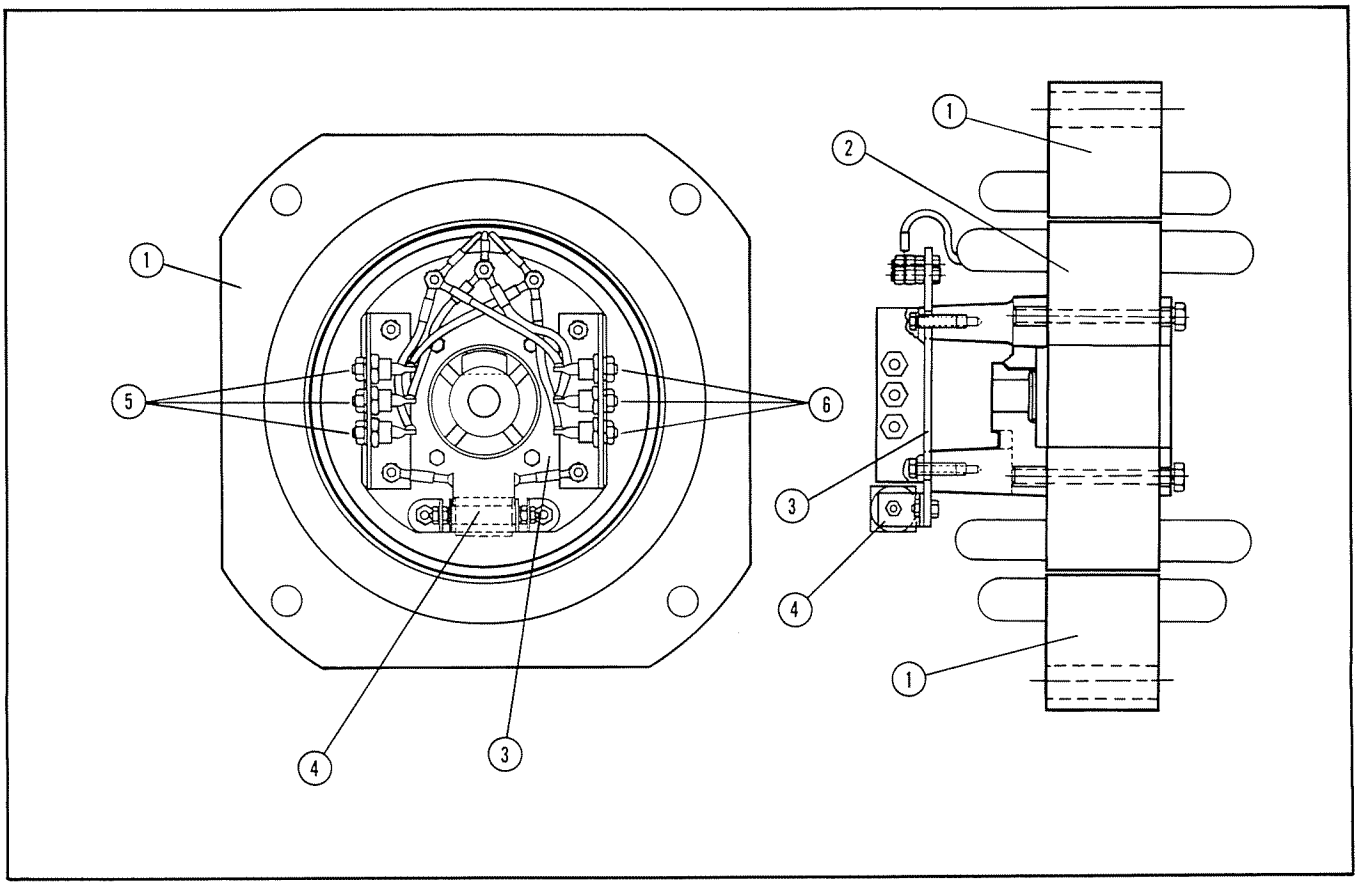

1. Exciter Stator Assembly with Winding
2. Exciter (Rotor) Armature & Rectifier Assembly with Winding
3. Rectifier Assembly
4. Surge Protector
5. Rectifiers (Standard Polarity)
6. Rectifiers (Reverse Polarity)

PARTS LIST

RECOMMENDED SPARE PARTS

Marathon Electric recommends the following spare parts to minimize inconvenience. Always include the Model Number and Serial Number of your generator when corresponding with Marathon Electric.

ITEM	QTY.	PART NUMBER
Voltage Regulator	1	
KR-4F		A-505156
KR-4FM		A-510632
KR-4FFX		A-511682
KR-4FFMX		A-511683
KR-7F		A-505308
KR-7FM		A-510633
KR-7FFX		A-511684
KR-7FFMX		A-511685
Bearing	1	Refer to factory
Surge Protector	1	A-A509431-1
Rectifier (Standard Polarity)	3	A-A9589-6
Rectifier (Reverse Polarity)	3	A-A9681-2
Fuse	6	A-505369
Fuse Holder	2	A-505310
Voltage Adjust Rheostat	1	A-508445
Exciter Field Circuit Breaker		
For KR-4 Regulators	1	A-511162-1
For KR-7 Regulators	1	A-511162-3
Exciter Assembly (In remote areas)	1	Refer to factory

Refer to factory for other voltage regulators.

Parts may be ordered direct from:

Marathon Electric Mfg. Corp.
P.O. Box 1407
Wausau, Wis. 54401

Phone (715) 675-3311

SHIPPING INSTRUCTIONS

SHIPPING INSTRUCTIONS

When installed, single bearing generator rotors are supported on the drive end by the drive discs bolted to the engine flywheel. When the engine is removed, the rotor must be supported by an appropriate fixture to prevent main rotor, main stator or exciter damage (see photo). Before shipping any generator, the main rotor must be supported by the adaptor using an appropriate fixture.

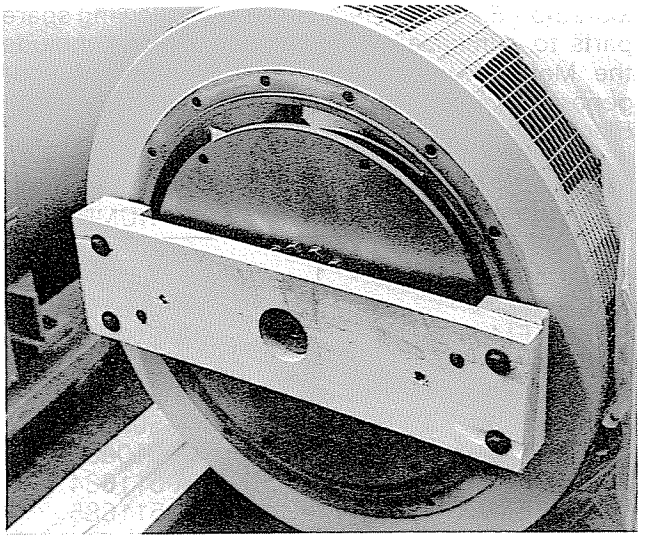

WARNING

DO NOT ATTEMPT TO TRANSPORT ANY GENERATOR WITHOUT PROPER ROTOR SUPPORT, OR EXTENSIVE EQUIPMENT DAMAGE CAN OCCUR.

NOTES

NOTES

Sales and Service Assistance

California

ANAHEIM
625 South Euclid Suite 15
Anaheim, CA 92802
Phone: (714) 956-7111

CASTRO VALLEY
20835 Chester Street, Suite B
Castro Valley, CA 94546
Phone: (415) 889-1393

Florida

MIAMI
Alvan C. Chaney & Assoc.
117 N.E. 54th St.
Miami, FL 33137
Phone: (305) 754-8857

Illinois

CHICAGO
655 Central Ave., Unit E
Wood Dale, IL 60191
Phone: (312) 350-1800

Indiana

INDIANAPOLIS
6520 E. 82nd Street
Indianapolis, IN 46250
Phone: (317) 842-4652

Louisiana

NEW ORLEANS
5622 Perrier Street
New Orleans, LA 70115
Phone: (504) 889-5426

Minnesota

MINNEAPOLIS
8700 West 36th Street
Minneapolis, MN 55426
Phone: (612) 935-8424

New York

SYRACUSE
Room 173 Pickard Building
5858 East Molloy Road
Syracuse, NY 13211
Phone: (315) 454-0994
454-3130

Ohio

CINCINNATI
1313 E. Kemper Rd., Suite 104
Cincinnati, OH 45246
Phone (513) 671-1677

CLEVELAND
20800 Center Ridge Rd-Suite 400
Cleveland, OH 44116
Phone: (216) 331-2910

Oklahoma

TULSA
2227 S. Garnett Road, Suite 106
P.O. Box 690115
Tulsa, OK 74169
Phone: (918) 438-3391

Pennsylvania

BRIDGEVILLE
Foster-McClinton, Inc.
2867 Washington Road
Bridgeville, PA 15017
Phone: (412) 941-4800

FOGELSVILLE
55 Snowdrift Road
Fogelsville, PA 18051
Phone: (215) 395-6880

South Carolina

GREENVILLE
100 Executive Center Drive
Greenville, SC 29615
Phone: (803) 288-8990

Tennessee

NASHVILLE
1040 Murfreesboro Road
Suite 207
Nashville, TN 37217
Phone: (615) 366-4262

Texas

DALLAS
1366 Exchange Drive
Richardson, TX 75081
Phone: (214) 699-0251

HOUSTON
13201 Northwest Freeway
Suite 202, #1
Houston, TX 77040
Phone: (713) 462-4445

Utah

SANDY
E.L. Pack & Associates
1830 East 9800 South
Sandy, UT 84092
Phone: (801) 571-4484

Washington

SPOKANE
Electro-Power Corp.
N. 104 Madelia
P.O. Box 2983
Spokane, WA 99202
Phone: (509) 535-2931

Australia

E.A. Marr & Sons
32 Regent Crescent
Moorebank, NSW 2170
Australia

England

Cranfold Electrical Drives
28 Nightingales
Cranleigh, Surrey GU6 8DE
England

MARATHON® ELECTRIC

100 E. Randolph Street
Wausau, WI 54401
Phone: (715) 675-3311
TWX: (910) 281-1521
TLX: 26-0175 ME WAS

MAGNAPLUS GENERATOR

280 -- 430 Frame
Installation, Operation and Maintenance Manual

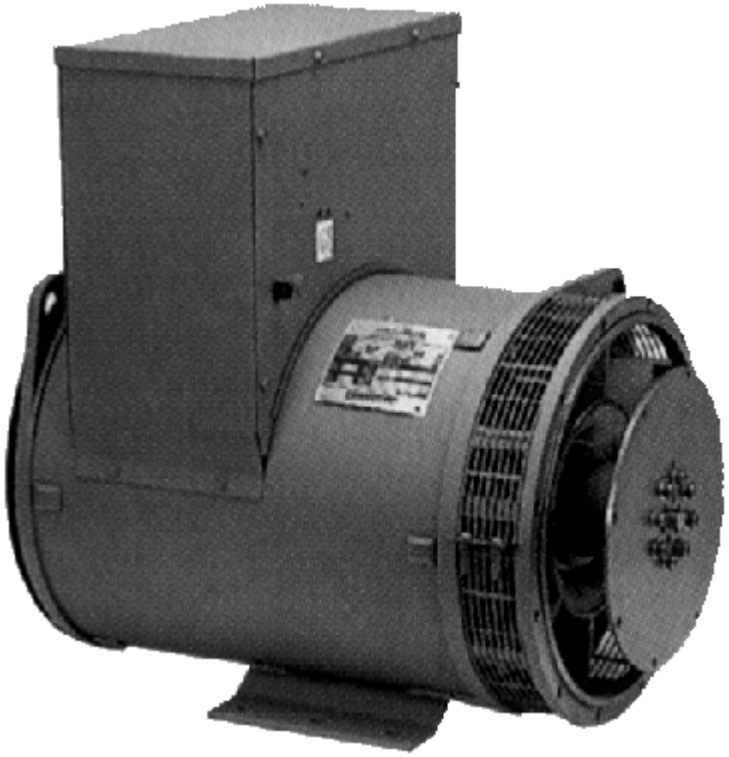

TABLE OF CONTENTS

SAFETY **4**

RECEIVING AND STORAGE **4**

UNPACKING AND HANDLING 4
STORAGE 4

PRINCIPLES OF OPERATION **5**

FIGURE 1 -- MAGNAPLUS CIRCUIT DIAGRAM 5
FIGURE 2 -- TYPICAL MAGNAPLUS LAYOUT DIAGRAM 5
VOLTAGE REGULATION 6
MOTOR STARTING 6
PARALLEL OPERATION 6
NONLINEAR LOADING 6

INSTALLATION **6**

PREPARATION FOR USE 6
GENERATOR MOUNTING 7
Single Bearing Units. *7*
Two Bearing Generators -- Direct Drive *7*
Two Bearing Units -- Belt Driven *7*
END PLAY TESTING 7
TORSIONAL VIBRATION 7

ENVIRONMENTAL CONSIDERATIONS **8**

WIRING CONNECTIONS **8**

OPERATION **11**

PRE-START INSPECTION 11
START-UP 11
SHUTDOWN PROCEDURE 12

MAINTENANCE **12**

DRYING WINDINGS 13
Space Heaters *13*
Forced Air *13*

TESTING **13**

VISUAL INSPECTION 13
CONSTANT EXCITATION TEST 13
CONTINUITY / RESISTANCE TEST 13
INSULATION TEST 14
DIODE TESTING 14

SERVICE **14**

GENERAL 14
FIELD FLASHING 14
BEARING REMOVAL 15
Opposite Drive End Bearing Bracket Removal. *15*
Drive End Bearing Bracket Removal, ... *15*
Two Bearing Units. *15*
BEARING REPLACEMENT 15
RECTIFIER ASSEMBLY REMOVAL 15
DIODE REPLACEMENT 15

RETURNED GOODS **16**

TROUBLESHOOTING **16**

GENERATOR PRODUCES NO VOLTAGE 17
GENERATOR PRODUCES LOW VOLTAGE, NO LOAD 17
GENERATOR PRODUCES LOW VOLTAGE WHEN LOAD APPLIED 18
GENERATOR PRODUCES FLUCTUATING VOLTAGE 18
GENERATOR PRODUCES HIGH VOLTAGE 18
GENERATOR BUILDS VOLTAGE FROM STARTUP, THEN GOES TO LOW (RESIDUAL) VOLTAGE 19
GENERATOR IS OVERHEATING 19
GENERATOR PRODUCES MECHANICAL NOISE 19
EQUIPMENT RUNS NORMALLY ON UTILITY POWER, BUT WILL NOT RUN ON GENERATOR 19

SPECIFICATIONS **20**

PARTS LIST – SINGLE BEARING **21**

Typical Generator Cross Section *21*

PARTS LIST – DUAL BEARING **22**

Typical Generator Cross Section *22*

SAFETY

PLEASE REMEMBER SAFETY FIRST. If you are not sure of the instructions or procedures contained herein, seek qualified help before continuing.

This service manual emphasizes the safety precautions necessary during the installation, operation, and maintenance of your MagnaPLUS generator. Each section of this manual has caution and warning messages. These messages are for your safety, and the safety of the equipment involved. If any of these cautions or warnings is not readily understood, seek clarification from qualified personnel before proceeding.

Before any service work is done, disconnect all power sources and lock out all controls to prevent an unexpected start-up of the generator set driver. Proper grounding (earthing) of the generator frame and distribution system in compliance with local and national electrical codes and specific site requirements must be provided. These safety precautions are necessary to prevent potential serious personal injury, or even death.

The hazards associated with lifting or moving your MagnaPLUS generator are pointed out in the installation and maintenance sections. Incorrect lifting or moving can result in personal injury or damage to the unit.

Prior to start-up of the unit ensure that all generator leads are properly connected to the generator link board located inside the connection box. Always assume that there will be voltage present at the generator terminals whenever the generator's shaft is rotating**,** and proceed accordingly. Residual voltage is present at the generator terminals and at the automatic voltage regulator panel connections even with the regulator fuse removed. Caution must be exercised, or serious injury or death can result.

This manual is not intended to be a substitute for properly trained personnel. Installation and repairs should only be attempted by qualified, trained people. The cautions and warnings point out known conditions and situations that are potentially hazardous. Each installation may well create its own set of hazards

When in doubt, ask. Questions are much easier to handle than mistakes caused by a misunderstanding of the information presented in this manual.

RECEIVING AND STORAGE

RECEIVING AND STORAGE

Upon receipt of the generator, it is recommended that it be carefully examined for possible shipping damage. The generator was given to the freight carrier in good condition; thus, the carrier is responsible for the product from the factory dock to the destination. Any damage should be noted on the freight bill before accepting the shipment. Any claims for damage must be promptly filed with the delivering carrier.

UNPACKING AND HANDLING

Carefully read all instruction tags shipped with the unit. When lifting, attach an overhead crane to the lifting lug(s) on the generator frame. Apply lifting forces in a vertical direction. When transporting single bearing generators, the generator's rotor must be adequately supported to prevent damage.

WARNING

THE LIFTING LUG (S) ON THE GENERATOR ARE DESIGNED TO SUPPORT THE GENERATOR ONLY. DO NOT LIFT A COMPLETE GENERATOR AND DRIVER ASSEMBLY BY MEANS OF LIFTING LUG (S) ON THE GENERATOR. PERSONAL INJURY OR EQUIPMENT DAMAGE MAY RESULT.

STORAGE

In the event that the generator is not immediately installed on its prime mover, it is recommended that the unit be stored indoors in a clean, dry area, which is not subject to rapid changes in temperature and humidity. If the generator is stored for a long period of time, the generator should be tested, cleaned and dried as required before being put into service. See the maintenance section of this manual for further information. If the unit has been stored in an area where it has been subject to vibration, it is recommended that the bearing(s) be inspected and replaced as necessary.

PRINCIPLES OF OPERATION

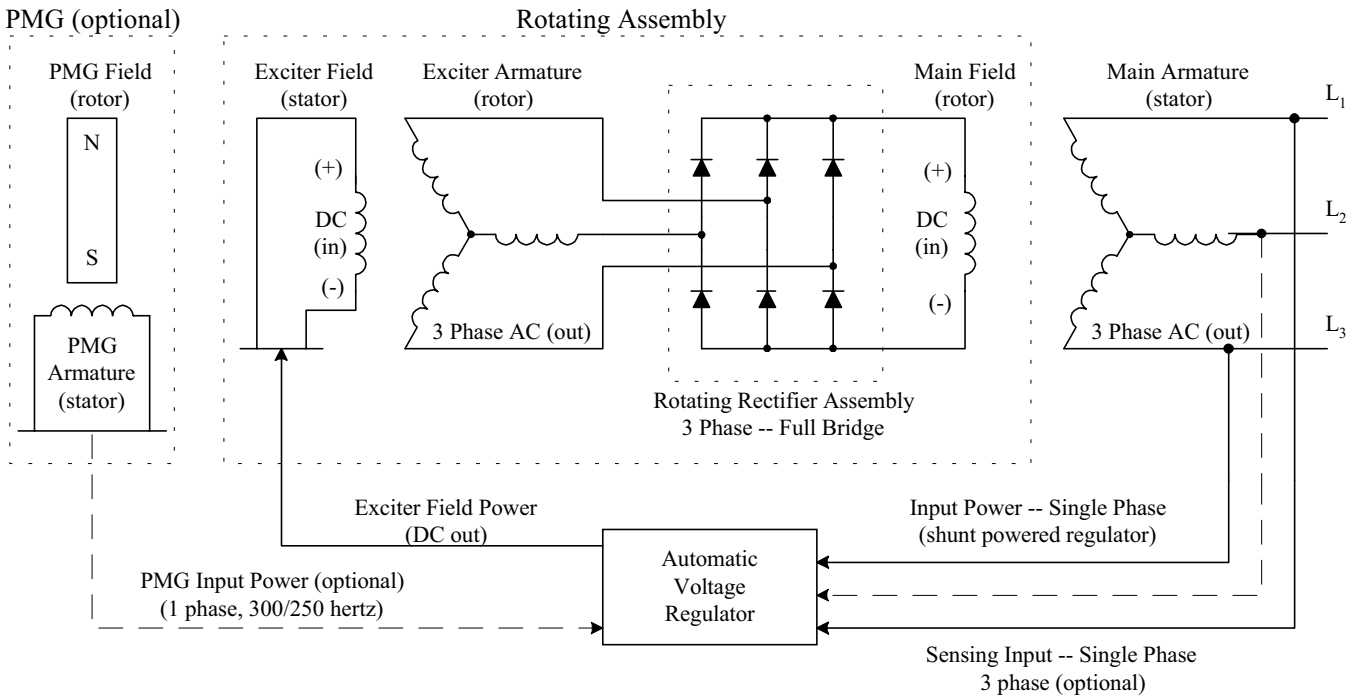

FIGURE 1 -- MagnaPLUS Circuit Diagram

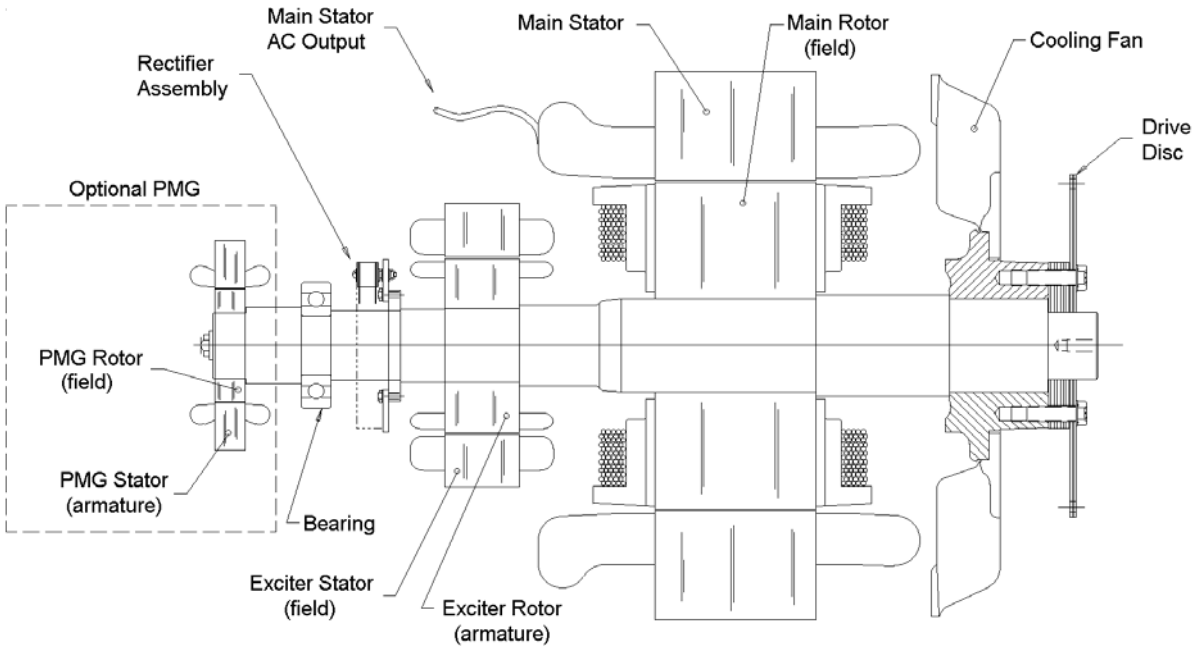

FIGURE 2 -- Typical MagnaPLUS Layout Diagram

PRINCIPLE OF OPERATION

MagnaPLUS generators are a brushless, self excited, and externally voltage regulated, synchronous AC generator. The generator is made up of six major components: main stator (armature), main rotor (field), exciter stator (field), exciter rotor (armature), rectifier assembly, and voltage regulator. In understanding the above terminology, note the following: stators are stationary, rotors rotate, a field is an electrical input, and an armature is an electrical output. These system components are electrically interconnected as shown in figure 1 and physically located as shown in figure 2.

The generator's exciter consists of a stationary field and a rotating armature. The stationary field (exciter stator) is designed to be the primary source of the generator's residual magnetism. This residual magnetism allows the exciter rotor (armature) to produce AC voltage even when the exciter stator (field) is not powered. This AC voltage is rectified to DC by the rotating rectifier assembly and fed directly to the main rotor (field). As the generator shaft continues to rotate, the main rotor (field) induces a voltage into the generator's main stator (armature). At rated speed, the main stator's voltage produced by the residual magnetism of the exciter allows the automatic voltage regulator to function. The regulator provides voltage to the exciter resulting in a build-up of generator terminal voltage. This system of using residual magnetism eliminates the need for a special field flashing circuit in the regulator. After the generator has established the initial residual voltage, the regulator provides a controlled DC field voltage to the exciter stator resulting in a controlled generator terminal voltage.

Voltage Regulation

In the standard configuration (shunt excited), the automatic voltage regulator receives both its input power and voltage sensing from the generator's output terminals (See Figure 1). With the optional PMG configuration, the regulator receives input power from the PMG. The regulator automatically monitors the generator's output voltage against an internal reference set point and provides the necessary DC output voltage to the exciter field required to maintain constant generator terminal voltage. Adjusting the regulator's reference set point changes the generator's terminal voltage. Consult the regulator manual for specific adjustment and operating instructions.

MOTOR STARTING

When a motor is started, the motor draws a large surge of current. This starting current is equivalent to the motors locked rotor or stall current and is 5 to 10 times' normal full load current. When the generator supplies this in-rush of starting current, the generator voltage dips temporarily. If the motor is too large for the generator, the generator's voltage dips greater than 30 percent. This may result in the motor starter de-energizing or the motor stalling. MagnaPlus generators generally supply .3 to .4 horsepower per generator kW in motor starting capability. For specific data contact Katolight.

PARALLEL OPERATION

All MagnaPlus generators are built with 2/3 pitch main stator windings and full amortisseur (damper) windings. These features make the MagnaPlus generators suitable for parallel operation when equipped with the proper voltage regulators and voltage regulator accessories. Consult with the factory for further information relative to parallel operations.

NONLINEAR LOADING

Solid state electronic control devices (variable frequency drives, precision motor controls, battery chargers, etc.) utilize electronic switching circuits (thyristors, SCRs, Diodes, etc.). These switching circuits introduce high frequency harmonics, which distort the normal waveform of the generator. This creates additional heat in the generator windings and may cause the generator to over-heat. Problems that can occur are not limited to the generator. Poor wave shape may adversely effect various loads connected to the generator. Consult Katolight for further information relative to nonlinear loads.

INSTALLATION

PREPARATION FOR USE

Although the generator has been carefully inspected and tested in operation prior to shipment from the factory, it is recommended that the generator be thoroughly inspected. Check all bolts for tightness and examine the insulation on lead wires for chafing prior to proceeding with installation. Remove all shipping tapes, bags, skids and rotor support blocking. For two bearing units, rotate the shaft by hand to ensure that it rotates smoothly without binding.

WARNING

DISABLE AND LOCKOUT ANY ENGINE CRANKING DEVICES BEFORE ATTEMPTING TO INSTALL OR SERVICE THE GENERATOR. FOR ELECTRIC START SETS, DISCONNECT THE CRANKING BATTERY. FOR AIR START, DISCONNECT THE AIR SUPPLY. FOR MOTOR GENERATOR SETS, OPEN THE POWER SUPPLY TO THE DRIVE MOTOR. FAILURE TO COMPLY WITH THESE SAFETY PROCEDURES COULD RESULT IN SEVERE PERSONAL INJURY OR EQUIPMENT DAMAGE.

NEVER "BAR OVER" THE ENGINE GENERATOR SET USING THE GENERATOR'S FAN. THE FAN IS NOT DESIGNED FOR THIS PURPOSE. BARRING OVER THE SET WITH THE FAN COULD DAMAGE THE FAN AND RESULT IN PERSONAL INJURY OR EQUIPMENT DAMAGE.

GENERATOR MOUNTING

Single Bearing Units.

Single bearing units are provided with an SAE flywheel housing adapter flange and flexible drive discs. Coupling the generator's shaft to the engine flywheel is accomplished with special steel drive discs bolted to the shaft. In addition to the drive discs, there may be a hub spacer, spacer discs, or a combination of hub spacer and spacer discs inserted between the drive discs and the shaft to achieve the proper shaft extension ("G" dimension per SAE J620c). Holes are provided in the periphery of the coupling discs, which correspond to tapped holes in the prime mover's flywheel. The outside diameter of the drive discs fit in a rabbet in the flywheel so that concentricity is assured.

Grade 8 place bolts and hardened washers are recommended to mount the drive discs to the flywheel. DO NOT USE SPLIT TYPE LOCK WASHERS**.** Split lock washers when biting into the drive disc cause stress risers, which may result in the disc fracturing.

The SAE flywheel housing adapter ring and the engine flywheel housing are designed to match each other with no further alignment necessary. Use grade 5 or greater mounting bolts. MagnaPLUS generator frames are constructed with two or three boltholes per foot. The feet should be shimmed where necessary to obtain solid contact with the sub-base. With the frame securely bolted to the engine flywheel housing, there is no side thrust or pull on the generator frame, thus no real need to secure the feet with more than one bolt per foot.

GENERATOR MOUNTING

Two Bearing Generators -- Direct Drive

Two bearing generators are provided with a keyed shaft extension. For direct drive generators, the assembler furnishes a flexible coupling, which is installed between the driver and the generator's shaft. Aligning the generator and its driver as accurately as possible will reduce vibration, increases bearing life, and ensure minimum coupling wear. It may be necessary to shim the generator feet for proper support and alignment. Secure the feet of the generator with grade 5 or greater bolts through the holes provided in the mounting feet. Consult the coupling manufacturer's instructions for alignment specifications and procedures.

GENERATOR MOUNTING

Two Bearing Units -- Belt Driven

Two bearing MagnaPLUS generators can be belt driven provided belts are sized and applied correctly. Please refer to your supplier of belts and sheaves for correct sizing and tensioning specifications. A bearing life calculation should be performed. Katolight recommends a minimum B-10 life of 40,000 hours. If cog type belts are used, a vibration may be introduced which could lead to premature failure of the bearings.

END PLAY TESTING

Refer to the engine manual for recommended endplay specifications and measurement procedures. If endplay is not to specification, it is an indication that the generator shaft is not moving freely in the assembly, and normal life of the thrust bearing could be impaired. Probable causes of this problem are:

1. Improper seating of drive discs in the flywheel resulting in misalignment.

2. Improper mating of generator frame to engine flywheel housing resulting in misalignment.

3. Improper "G" dimension per SAE J620c on either the engine or generator.

TORSIONAL VIBRATION

Torsional vibrations are generated in all rotating shaft systems. In some cases, the amplitude of these vibrations at critical speeds may cause damage to the generator, its driver, or both. It is therefore necessary to examine the torsional vibration effect on the entire rotating system. IT IS THE RESPONSIBILITY OF THE GENERATOR SET ASSEMBLER TO ASSURE THE TORSIONAL COMPATIBILITY OF THE GENERATOR AND ITS DRIVER. Drawings showing pertinent dimensions and weights of the rotating assembly will be supplied by Katolight upon request.

ENVIRONMENTAL CONSIDERATIONS

The MagnaPLUS generator is designed for heavy-duty industrial applications; however, dirt, moisture, heat and vibrations are enemies of rotating electrical machinery. Excessive exposure to the elements may shorten generator life. The temperature of the cooling air entering the intake openings of the generator should not exceed the ambient temperature shown on the generator's nameplate. Generators intended for outdoor application should be protected with housings having adequate ventilation. Although the standard insulation systems are moisture and humidity resistant, space heaters are recommended for extreme conditions. If the generator is to be installed in an area where blowing sand and dust are present, the enclosure should be fitted with filters. Filters reduce erosion on the generator's insulation by blocking high velocity abrasive particles generated by the flow of cooling air through the generator. Consult the factory for appropriate filters and generator deratings required.

WIRING CONNECTIONS

Wiring of the generator and accessories should be done in accordance with good electrical practices. Follow government, industry and association standards.

The generator conduit box construction allows cable entry from multiple sides. A hole saw or other appropriate tool may be used to provide for conduit entrance. Protect the interior of the generator from shavings when drilling or sawing. An approved connector must be used in conjunction with the conduit. To minimize the transmission of vibration, it is essential that flexible conduit be used for all electrical entrance to the generator conduit box.

All MagnaPLUS generators are equipped with link boards (terminal strips) for both internal and external connections. All connections made to the studs of the link board should be made with high quality ring terminals. Ring terminal sizes are 6 mm (280 Series Frames) and 10 mm (360 and 430 Series Frames). Torque link board connections to the following specifications: 280 frame -- 5.4 NM (4 Ft LB); 360 & 430 frame -- 27 NM (20 Ft LB).

Refer to the connection diagram supplied with the generator and / or the proper diagrams shown in this manual. Install all inter-component and external wiring in accordance with national and local electrical codes. The neutral in the following connection diagrams shown below may be either grounded (earthed) or left above ground potential (floating). See national and local codes and / or the system distribution wiring schematic diagram for the proper connection of the neutral.

The following connection diagrams are shown for twelve lead generators. Ten lead generators have the same terminal designations except for leads T10, T11, and T12. These three leads are internally connected inside the generator and brought out as a single lead (T0). Ten lead generators can only be connected in a wye configuration

HIGH WYE CONNECTION

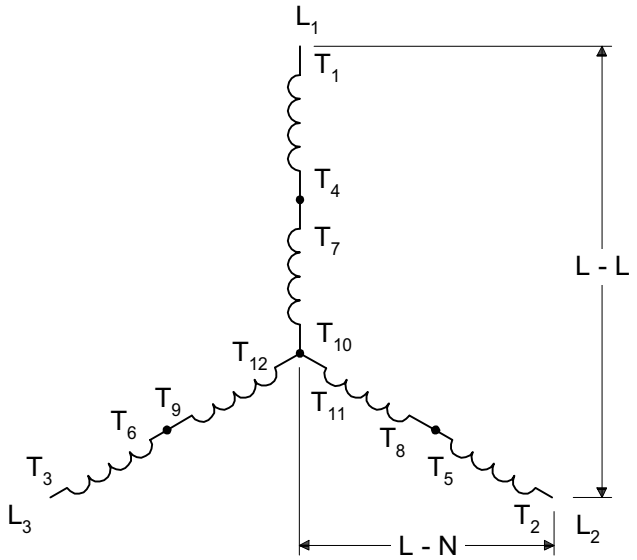

VOLTAGE (HIGH WYE)		
Hz	L-L	L-N
60	480	277
	460	266
	440	254
	416	240
	380	219
50	416	240
	400	231
	380	219

LOW WYE CONNECTION

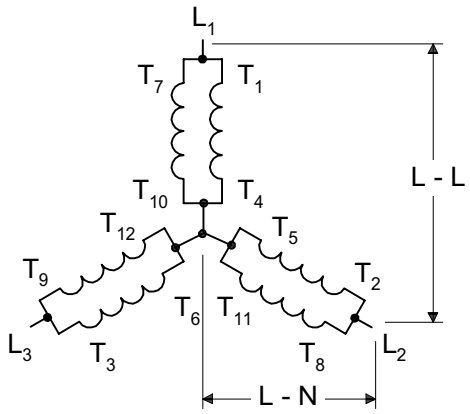

VOLTAGE (LOW WYE)		
Hz	**L-L**	**L-N**
60	240	139
	230	133
	220	127
	208	120
	190	110
50	208	120
	200	115
	190	110

HIGH DELTA CONNECTION

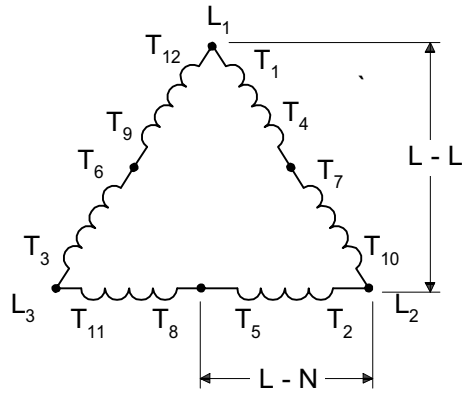

VOLTAGE (HIGH DELTA)		
Hz	**L-L**	**L-N**
60	277	139
	240	120
50	240	120
	220	110
	200	100

LOW DELTA CONNECTION

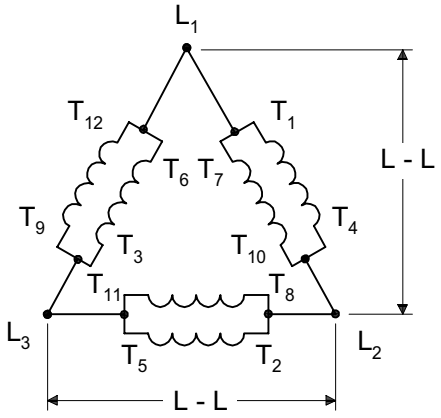

VOLTAGE (LOW DELTA)		
Hz	**L-L**	**L-N**
60	120	NA
	110	NA
50	110	NA
	100	NA

DOUBLE DELTA -- SINGLE PHASE CONNECTION

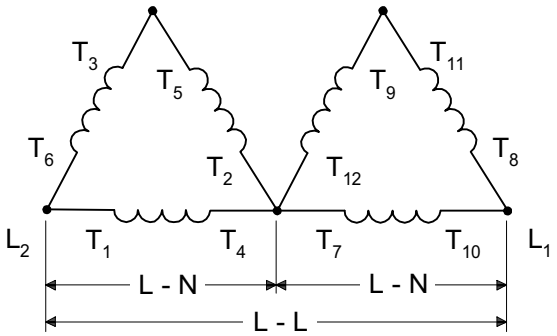

VOLTAGE (DOUBLE DELTA)		
Hz	**L-L**	**L-N**
60	240	120
	220	110
50	220	110

Note: Single-phase KW/KVA ratings are approximately equal to 50% of the generator's three phase ratings.

LOW ZIG ZAG -- SINGLE PHASE CONNECTION

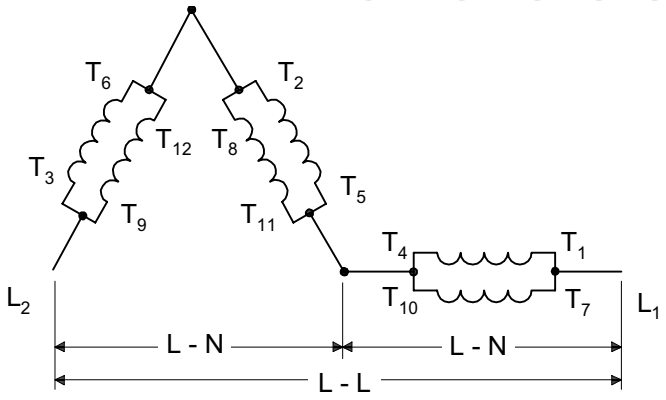

VOLTAGE (LOW ZIGZAG)		
Hz	**L-L**	**L-N**
60	240	120
	220	110
50	220	110
	200	100

Note: Single-phase KW/KVA ratings are approximately equal to 50% of the generator's three phase ratings.

HIGH ZIG ZAG -- SINGLE PHASE CONNECTION

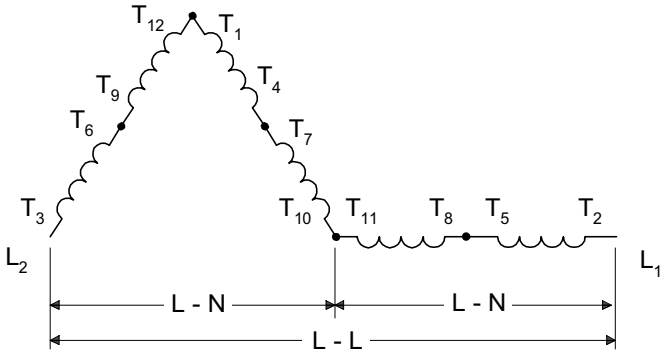

VOLTAGE (HIGH ZIGZAG)		
Hz	**L-L**	**L-N**
60	480	240
	460	220
50	415	208
	380	190

Note: Single-phase KW/KVA ratings are approximately equal to 50% of the generator's three phase ratings.

DEDICATED SINGLE PHASE CONNECTION

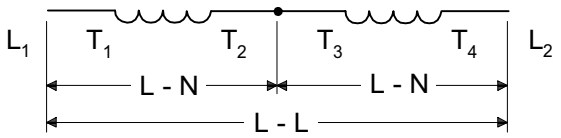

VOLTAGE (DEDICATED)		
Hz	L-L	L-N
60	240	120
	220	110
50	220	110
	200	100

OPERATION

PRE-START INSPECTION

Before starting the generator for the first time, the following inspection checks are recommended:

1. A visual inspection should be made for any loose parts, bad connections, or foreign materials.

2. Bar the set over by hand for at least 2 revolutions to be sure that there is no interference and that the set turns freely. If the set does not turn freely, check for clearance in the generator and exciter air gap.

3. Check all wiring against the proper connection diagrams, and ensure that all connections and terminations are tight and properly insulated.

WARNING

MAGNAPLUS GENERATORS MAY HAVE VOLTAGE PRESENT AT THE LEAD TERMINALS WHEN THE SHAFT IS ROTATING. DO NOT PERMIT OPERATION OF THE GENERATOR UNTIL ALL LEADS HAVE BEEN CONNECTED AND INSULATED. FAILURE TO DO THIS MAY RESULT IN PERSONAL INJURY OR EQUIPMENT DAMAGE

4. Verify that all equipment is properly grounded (earthed).

5. Clear the surrounding area of any materials that could be drawn into the generator.

6. Check all fasteners for tightness.

7. Check all access plates, covers, screens and guards. If they have been removed for assembly or inspection, reinstall and check for security.

8. Review all prime mover prestart-up instructions, and ensure that all recommended steps and procedures have been followed.

9. Remove any masking materials affixed during painting. Inspect the generator, prime mover, and any accessory equipment to ensure that nameplates, and all safety warning / caution signs and decals provided with the equipment are in place and clearly visible.

Note: It is strongly recommended that the authority having jurisdiction over the installation site be consulted to determine if any additional warning or caution notices, or additional safety devices are required by local codes / standards. Any such required notices or devices should be installed prior to initial startup.

START-UP

The following procedure should be followed when starting the generator set for the first time.

1. The generator output must be disconnected from the load. Be sure that the main circuit breaker or fused disconnect is in the open position.

2. Open the input power to the automatic voltage regulator. Remove the fuse or disconnect and insulate one of the regulator input power leads. (See separate regulator manual)

3. Verify that all prime mover start-up procedures have been followed.

4. If the unit is provided with space heaters, ensure that they are de-energized. In some installations, a set of auxiliary contacts on the main circuit breaker or transfer switch will automatically open the space heater circuit when the generator is connected to the load.

5. Start the prime mover, and adjust it for proper speed. See generator nameplate.

6. The purpose of this initial test with the regulator out of the circuit is to detect any wiring mistakes without exposing the unit to undue risk. Check all line to line and line to neutral voltages for balanced voltage. If voltages are balanced shut down the set and reconnect the regulator. If voltages are unbalanced, shut down the equipment and check for improper wiring. If the problem persists, consult the factory.

   With the regulator de-energized, the residual voltage should be 10 - 25% of rated value. It is recommended that this residual voltage and driver RPM be recorded for use as a future troubleshooting benchmark.

WARNING

QUALIFIED ELECTRICAL PERSONNEL MUST CONDUCT THE FOLLOWING TEST. LETHAL VOLTAGE MAY BE PRESENT AT BOTH THE GENERATOR AND VOLTAGE REGULATOR TERMINALS DURING THIS PROCEDURE. CAUTION MUST BE EXERCISED NOT TO COME INTO PERSONAL CONTACT WITH LIVE TERMINALS, LINKS, OR STUDS. SERIOUS INJURY OR DEATH COULD RESULT.

7. Start the set and adjust the terminal voltage to the desired value by means of the regulator voltage adjustment. If the regulator is equipped with a stability adjustment, follow the instructions in the regulator manual to adjust the stability. Again, check all line to line and line to neutral voltages for balance. It is recommended practice to record the no load excitation (DC voltage to the exciter stator), generator terminal voltage, and driver speed as a benchmark for future troubleshooting.

8. Close the main circuit breaker to the load.

9. Monitor the generator output current to verify that it is at or below nameplate value.

10. Check generator speed (frequency) under load. Adjust as necessary. (Refer to prime mover or governor manuals)

SHUTDOWN PROCEDURE

There are no specific instructions for shutting down the generator; however, several good practices should be observed to prolong equipment life.

1. It is advisable to disconnect all loads (open main circuit breaker or disconnect) prior to shutdown. This is especially important if loads can be damaged by low voltage or low frequency conditions during generator "coast down".

2. Isolate all conditions that could apply voltage to the generator terminals while the generator is at rest. Failure to comply could result in personnel injury or equipment damage.

3. If the unit is equipped with space heaters, verify that the heater circuit is energized.

MAINTENANCE

The following maintenance procedures should be followed to ensure long equipment life and satisfactory performance. Maintenance intervals will depend upon operating conditions.

1. Routinely check intake and exhaust air screens to ensure that they are clean and free of debris. Clogged intake air screens will reduce cooling airflow and result in higher operating temperatures. This will reduce generator life and may result in generator damage.

2. All MagnaPLUS generators are equipped with double shielded ball bearings lubricated for the life of the bearing. Every 1,000 hours check the bearing(s) for smooth, quiet operation. For continuous duty generators, recommended practice is to replace the bearing during major overhauls of the engine.

3. Periodically inspect the unit for any buildup of contamination (dirt, oil, etc.) on the windings. If the wound components have become coated with heavy concentrations of oil and grime, the unit should be disassembled and thoroughly cleaned. This operation is not one that can be accomplished effectively on site, but rather one that should be conducted by an authorized service center equipped with the appropriate apparatus and solvents necessary to properly clean and dry the generator.

WARNING

QUALIFIED ELECTRICAL PERSONNEL MUST CONDUCT THE FOLLOWING TEST. LETHAL VOLTAGE MAY BE PRESENT AT BOTH THE GENERATOR AND VOLTAGE REGULATOR TERMINALS DURING THIS PROCEDURE. CAUTION MUST BE EXERCISED NOT TO COME INTO PERSONAL CONTACT WITH LIVE TERMINALS, LINKS, OR STUDS. SERIOUS INJURY OR DEATH COULD RESULT.

4. Every 2,000 operating hours or in conjunction with scheduled engine maintenance check the DC no load excitation voltage per item #7 in the startup procedure. Compare this voltage with the value recorded during initial startup. If this value of no load excitation voltage is markedly higher than the benchmark reading, it is an indication of problems in the exciter, main field, or the rotating rectifier assembly. Ensure that RPM is the same as initial test.

5. Monitor and record insulation resistance with a 500 volt mega-ohm meter. The minimum acceptable reading is 2 mega-ohms. If the reading drops below the minimum, the generator should be cleaned and dried at an authorized service shop. Consult Katolight for more information.

DRYING WINDINGS

Generators in service may inadvertently have their windings exposed to splashing or sprayed water. Units that have been in transit or storage for long periods of time may be subjected to extreme temperature and moisture changes causing excessive condensation. Regardless of the source of moisture, wet windings should be thoroughly dried out before operating the unit. If this precaution is not taken, serious damage to the generator can result. The following procedures may be utilized in drying the generator's windings. Winding wetness and situation limitations will influence the method selected.

Space Heaters

An electric heater may have been supplied with the generator. When energized from a power source other than the generator, the heater will gradually dry the generator. Enclosing the unit with covering and inserting additional heating units can accelerate this process. A hole should be left at the top of the covering to permit the escape of moisture. Care should be taken not to overheat various accessory equipment mounted with the generator.

Forced Air

Another method to dry the generator is to run the set with no excitation (see startup procedure item #2). The natural flow of ambient air through the generator will tend to dry the windings. This method can be accelerated by adding a source of heat at the air intake to the generator. Heat at point of entry should not exceed 80 C (180 F).

TESTING

Visual Inspection

Remove covers and look for any obvious problems: burnt windings, loose connections, broken wires, frayed insulation, cracked brackets, missing hardware, etc. Check for foreign objects that may have been drawn into the generator. Verify that the generator's air gaps (main rotor and exciter) are free from obstructions. If possible, rotate the generator manually to ensure free rotation. Never "bar over" the engine generator set using the generator fan.

WARNING

QUALIFIED ELECTRICAL PERSONNEL MUST CONDUCT THE FOLLOWING TEST. LETHAL VOLTAGE MAY BE PRESENT AT BOTH THE GENERATOR AND VOLTAGE REGULATOR TERMINALS DURING THIS PROCEDURE. CAUTION MUST BE EXERCISED NOT TO COME INTO PERSONAL CONTACT WITH LIVE TERMINALS, LINKS, OR STUDS. SERIOUS INJURY OR DEATH COULD RESULT.

Constant Excitation Test
(12V BATTERY TEST)

The generator "no load" voltage is dependent on exciter input voltage and generator speed. With the generator operating at rated speed and 12 volts dc applied to the exciter field, the generators terminal voltage will be near rated value.

1. Shutdown the generator set and connect a voltmeter on the generator terminals.

2. Disconnect the regulator's F+ (F1) and F- (F2) leads and connect them to a 12V battery. Caution should be taken to ensure that the battery is not exposed to any potential arcing.

3. With no load on the generator (main breaker open) run the generator at rated speed. Measure the generator's terminal voltage and compare this value with values recorded during installation.

If voltage readings are normal, the main generator and excitation are operating properly. Troubleshooting should continue with the regulator. If readings are not normal the problem is in the generator. Continue testing diodes, surge suppressor, and windings.

Continuity / Resistance Test

The generator has four components that can be checked using an ohmmeter: exciter stator, exciter rotor, main stator and main rotor. Each of these components is comprised of various windings that form a complete electrical path of relatively low resistance. Using an ohm meter measure the loop resistance of each component. Compare these measured values with the values listed in the specification section of this manual. Note that very small resistance values require precision equipment to make accurate measurements; however, a standard ohmmeter will provide a good indication of winding continuity.

Insulation Test

Insulation resistance is a measure of the integrity of the insulating materials that separate the electrical windings from the generator's steel core. This resistance can degrade over time or be degraded by contaminants: dust, dirt, oil, grease, and especially moisture. Most winding failures are due to a breakdown in the insulation system. In many cases, low insulation resistance is caused by moisture collected when the generator is shutdown

Insulation resistance is measured with a megger (mega-ohm meter). A megger measures insulation resistance by placing 500 volts between the winding and the frame of the generator. Caution must be taken to remove all electronic devices (regulators, diodes, surge protectors, capacitors, protective relays, etc.) from the winding circuit before checking the insulation. Winding insulation can be checked on the main stator, main rotor, exciter stator, and exciter rotor. Minimum resistance is 2 mega-ohms. If the winding resistance is low it must be dried (see maintenance section) or repaired.

DIODE TESTING

If the generator is close coupled to an engine, it may be necessary to "bar over" the engine in order to gain access to a given area of the rectifier assembly. **NEVER** use the generator's fan as a fulcrum to accomplish this. Use the engine manufacturer's recommended practice to manually turn over the engine. To prevent possible injury to personnel, and damage to the equipment, ensure that the engine cannot start during this procedure.

Remove the two main rotor leads and the three exciter rotor leads from the rectifier assembly (figure 4). The rectifier assembly is now electrically isolated from the generator. The diodes remain mounted and the diode leads remain connected to the terminal posts. Using an ohmmeter or a battery light continuity tester, place one test probe on the diode lead terminal post. In succession, touch the other test probe to the lead screw hole in each heat sink. Reverse the probes and repeat the procedure. You have now tested the three diodes connected to this terminal post in both the forward and reverse direction. Repeat the procedure using the other diode terminal post.

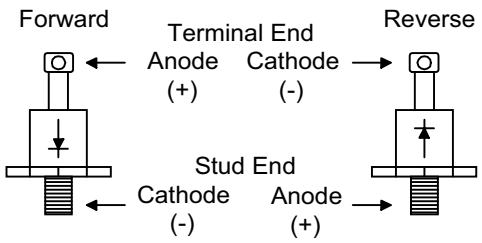

FIGURE 3: DIODE POLARITY

When the positive test probe is connected to the diode's anode and the negative test probe is connected to the diode's cathode (forward biased), the diode will switch on and conduct electricity (figure 3). This is observed by a low resistance reading when using an ohm meter or the lighting of the bulb when using a battery light continuity tester. Reversing the test leads (reverse biased) will result in the diode switching off and no electricity will be conducted. The results of these tests should indicate one of three conditions:

1. **Good diode:** Will have a much greater resistance in one direction than the other. Typical reverse biased resistance will be 30,000 ohms or greater, while forward biased resistance will be less than 10 ohms. The battery-light tester will have the light "on" in one direction and "off" in the other.

2. **Shorted condition:** Ohmmeter reading will be zero, or very low in both directions. The continuity tester will have the light "on" in both directions.

3. **Open condition:** Ohmmeter will have a maximum (infinity) reading in both directions. Continuity tester light will be off in both directions.

Diode failure after a 25 hour "run-in" period is generally traceable to external causes such as a lightning strike, reverse current, line voltage spikes, etc. All 6 diodes are essentially in the same circuit. When a diode is stressed to failure, there is no easy method to determine remaining life in the other diodes. To avoid possible continued failures, it is recommended that the entire rectifier assembly be replaced rather than replacing individual diodes.

SERVICE

GENERAL

The service procedures given in this section are those which can reasonably be conducted on-site with a minimum number of special tools and equipment. Qualified maintenance personnel should conduct all service procedures. Replacement parts may be ordered through an authorized service center or directly from the factory**.**

FIELD FLASHING

Restoring Residual Magnetism
(not applicable on PMG equipped generators)

To restore residual magnetism to the generator, connect a 12 volt battery to the exciter field while the generator using the following procedure:

1. Shutdown the generator set. Remove the exciter field leads F+ and F- from the regulator.

CAUTION:
Failure to remove the exciter field leads from the automatic voltage regulator during flashing procedures may destroy the regulator.

2. Connect the F+ and F- leads to the battery's corresponding positive and negative terminals. This should be done using an appropriate length of lead wire to separate the battery from the point of connection (batteries may explode when exposed to an electric arc). After 3 to 5 seconds, remove the F- lead. An inductive arc should result. If no arc is drawn, repeat the procedure.

3. Reconnect the F+ and F- leads to the regulator. Restart the generator and verify that terminal voltage is developed. If terminal voltage does not develop, repeat the field flashing procedure and / or consult the trouble shooting section.

Bearing Removal

Prior to performing this operation, it is suggested that the alternator's shaft be rotated until two of the main rotor poles are in a vertical position. Once the bearing bracket is backed out, the rotor will drop on the main stator core. Having the rotor in this position will limit the amount of rotor drop to that of the air gap. Visually inspect the bearing bore for damage or wear. If worn or damaged, replace prior to reassemble.

Opposite Drive End Bearing Bracket Removal.
Prior to proceeding with bracket removal, disconnect exciter field leads F+ and F- from the automatic voltage regulator and ensure that they are free to move when the bearing bracket is removed. Remove the bearing bracket retaining bolts. Using a pair of screw drivers, wedge the bracket off the frame. After approximately 1/8 inch, the bracket will clear the locating register on the frame and will drop until the rotor is resting on the main stator core. Continue to pull the bracket free from the bearing. Visually inspect the bearing bore and o-ring (if equipped) for damage or wear. If worn or damaged, repair or replace prior to reassembly.

Drive End Bearing Bracket Removal,
Two Bearing Units.
Remove any drive arrangement from the generator shaft extension. Remove the bearing lock ring retaining screws. There is no o-ring in the drive end bearing bracket. The shaft extension must be supported before proceeding further. A hoist and sling, jack, or some other means of support with a capacity of 2 tons should be used.

Remove the bearing bracket retaining cap screws. Using a flat bladed screw driver or chisel, pry the bracket back from the frame. After approximately 1/8 inch, the bracket will clear the locating register on the frame. Lower the shaft extension until the rotor is resting on the main stator core. Continue to pull the bracket free from the bearing. Visually inspect the bearing bore for damage or wear. If worn or damaged, sleeve or replace prior to reassembly.

Reassembly note: Before the bearing bracket is seated against the frame, a threaded rod may be used to help align the inner bearing cap with the bearing bracket.

BEARING REPLACEMENT

Using a bearing puller, remove the existing bearing. It is strongly recommended that the bearing be replaced any time it is removed from the shaft. **ALWAYS** install the same type and size bearing that was supplied as original equipment. Order by part number from the parts list, and include the unit serial number and part number when ordering. Heat the bearing to a maximum of 100°C (212°F) in an oven. Apply a thin coat of clean lubricating oil to the press-fit area of the rotor shaft. Using suitable heat resistant gloves, install the bearing over the end of the shaft until it seats against the shaft shoulder. The bearing should slide on the shaft and be seated without excessive force. Should the bearing bind on the shaft prior to being seated against the shoulder, a piece of tubing slightly larger than the press fit area can be used to drive the bearing to its final position. Using light taps with a soft mallet, apply pressure to the inner race only.

Rectifier Assembly Removal

The rectifier assembly cannot be removed until the opposite drive end bearing bracket and bearing have been removed (see bearing removal procedure). Remove the three exciter rotor leads from the heat sinks and the two main rotor leads from the main rotor posts (see Figures 4). Remove the screws securing the rectifier assembly and pull the assembly free from the shaft.

Diode Replacement

Prior to installing a replacement diode on the heat sink, apply a thin film of conductive heat sink compound around the base of the diode (do not coat the threads). When installing a diode on the heat sink, care should be taken not to over torque the retaining nut, which could cause damage to the device. Torque to 28 pound-inches. If not damaged, the existing diode lead wire may be unsoldered from the failed diode, and resoldered on the replacement.

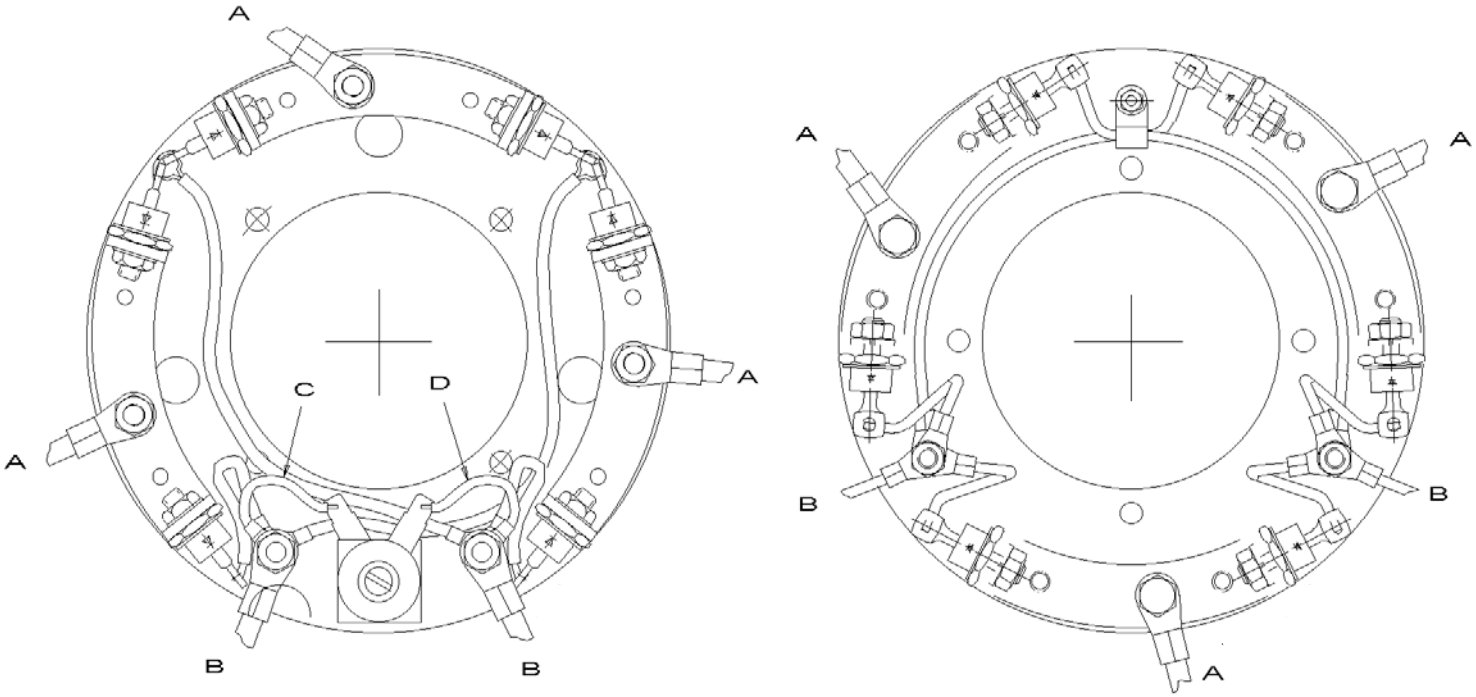

430 FRAME **280 / 360 FRAME**

A - Exciter Rotor Lead, B - Main Rotor Lead, C - Red (+) Suppressor Lead, D - Black (-) Suppressor Lead

FIGURE 4: ROTATING RECTIFIER ASSEMBLY

RETURNED GOODS

Contact Katolight Corporation for authorization before returning any product. We can not be responsible for any items returned without authorization.

CAUTION

Single bearing generators must have their rotor assembly properly secured to prevent damage during transit to the factory, or to an authorized service center.

TROUBLESHOOTING

This section is intended to suggest a systematic approach to locating and correcting generator malfunctions. The section is arranged according to the symptoms of the problem. The steps have been arranged in an attempt to do the easy checks first and prevent further damage when troubleshooting a disabled machine.

The first step of troubleshooting is to gather as much information as is possible from operating personnel and individuals present during the failure. Typical information includes: how long the unit had been operating; what loads were on line; weather conditions; protective equipment that did or did not function. In addition, information as to the operating condition of the generator's prime mover is vital. Has the prime mover been maintaining constant speed? If not, have there been extended periods of under speed operation? Has the prime mover experienced an over-speed condition? If yes, what was the maximum speed, and how long did the unit operate at that elevated speed?

The generator speed should be maintained at rated nameplate value during all operating tests. The frequency of the generator depends upon rotational speed. Most regulators used with MagnaPLUS generators have built in under frequency protection such that if the speed is reduced more than 5%, the voltage will drop off rather rapidly with further reductions in speed.

WARNING

HIGH VOLTAGES MAY BE PRESENT AT THE GENERATOR'S TERMINALS WHEN THE UNIT IS RUNNING. SOME ACCESSORY EQUIPMENT SUCH AS SPACE HEATERS MAY BE ENERGIZED FROM AN OUTSIDE POWER SOURCE WHEN THE UNIT IS AT REST. TOOLS, EQUIPMENT, CLOTHING AND YOUR BODY MUST BE KEPT CLEAR OF ROTATING PARTS AND ELECTRICAL CONNECTIONS. SPECIAL PRECAUTIONS MUST BE TAKEN DURING TROUBLESHOOTING SINCE PROTECTIVE COVERS AND SAFETY DEVICES MAY BE REMOVED OR DISABLED TO GAIN ACCESS AND PERFORM TESTS. BE CAREFUL. SERIOUS PERSONAL INJURY OR DEATH CAN RESULT FROM THESE HAZARDS. CONSULT QUALIFIED PERSONNEL WITH ANY QUESTIONS.

GENERATOR PRODUCES NO VOLTAGE

CAUSE	CHECK AND REMEDY
Voltmeter off or defective	Check voltage with a separate meter at the generator terminals.
Incorrect or defective connections	Verify generator connections. See drawings supplied with the generator or lead connection diagrams in this manual. Inspect all wiring for loose connections, open circuits, grounds, and short circuits.
Loss of residual	Flash the field. Refer to field flashing in the service section. If the generator is equipped with a PMG, field flashing is not necessary -- check regulator fuse and input power from the PMG.
Defective diodes, suppressor, or windings	Test the generator using the 12 volt battery test as specified in the testing section. If the results indicate generator problems, perform insulation, continuity, and diode tests as specified in the testing section.
Regulator protection operating	Adjust regulator. Consult regulator manual.
Regulator inoperative	Adjust or replace regulator. Consult regulator manual.

GENERATOR PRODUCES LOW VOLTAGE, NO LOAD

CAUSE	CHECK AND REMEDY
Underspeed operation	Check speed using a tachometer or frequency meter.
Voltmeter off or defective	Check voltage with a separate meter at the generator terminals.
Incorrect or defective connections	Verify generator connections. See drawings supplied with the generator or lead connection diagrams in this manual. Inspect all wiring for grounds, open circuits and short circuits.
Loss of regulator power	Check regulator fuse and input power. Input power is produced by the generator's residual voltage or from an optional PMG.
Regulator adjustment	Adjust regulator settings. Consult regulator manual.
Regulator incorrectly connected	Review the generator connection diagram or reference the regulator manual.
Defective diodes, suppressor, or windings	Test the generator using the 12 volt battery test as specified in the testing section. If the results indicate generator problems, perform insulation, continuity, and diode tests as specified in the testing section.
Regulator inoperative	Adjust or replace regulator. Consult regulator manual.

GENERATOR PRODUCES LOW VOLTAGE WHEN LOAD APPLIED

CAUSE	CHECK AND REMEDY
Excessive load	Reduce load. The load on each leg should be evenly balanced, and rated current should not be exceeded on any leg.
Large motor starting or low load power factor	Motor starting currents are too large for the generator. When starting multiple motors, sequence the motors and start the largest motors first. Reduce lagging power factor load.
Driver speed droop or belt slip	Check driver. If belt driven, check belt tension. Check under frequency setting on regulator. Under frequency voltage roll-off may be activated.
Reactive droop	If the generator is equipped for parallel operation, some droop is normal as reactive load increases. When operating as a single unit, the parallel CT can be shorted to eliminate this effect. Refer to Regulator manual.
Line drop	If voltage is proper at generator terminals but low at load terminals, increase external wire size.
Defective diodes, suppressor, or windings	Test the generator using the 12 volt battery test as specified in the testing section. If the results indicate generator problems, perform insulation, continuity, and diode tests as specified in the testing section.

GENERATOR PRODUCES FLUCTUATING VOLTAGE

CAUSE	CHECK AND REMEDY
Fluctuating engine speed	Check engine and governor systems for malfunctions. Check load for fluctuation.
Regulator stability	Adjust Regulator stability. Refer to Regulator manual.
Regulator external rheostat	Replace defective or worn rheostat. Use shielded cable to minimize electrical noise.
Defective rectifier assembly	Check assembly for loose connections. Test the diodes as specified in the test section.
Loose terminal or load connections	Improve connections both mechanically and electrically.
Defective regulator	Replace regulator.

GENERATOR PRODUCES HIGH VOLTAGE

CAUSE	CHECK AND REMEDY
Faulty metering	Check voltage with separate meter at generator terminals.
Incorrect connections	Verify generator connections. Refer to drawings supplied with the generator or connection diagrams in this manual.
Regulator adjustments	Adjust regulator. Consult regulator manual.
Leading power factor	Check the power factor of the load. If power factor is leading, change load configuration. Excessive leading power factor (capacitors) can cause voltage to climb out of control.
Incorrect regulator connection	Verify regulator voltage sensing is connected correctly. Consult regulator manual.
Defective regulator	Replace regulator.

GENERATOR BUILDS VOLTAGE FROM STARTUP, THEN GOES TO LOW (RESIDUAL) VOLTAGE

CAUSE	CHECK AND REMEDY
Regulator protective circuit operating	Check indicators on regulator. Correct problems and adjust regulator as is required. Refer to regulator manual.

GENERATOR IS OVERHEATING

CAUSE	CHECK AND REMEDY
Generator is overloaded	Reduce load. Check with ammeter and compare with nameplate rating.
Clogged ventilating screens	Clean air passages.
High room temperature or altitude	Improve ventilation or reduce load.
Insufficient circulation of cooling air	Generator location and enclosure design must provide adequate airflow and minimize recirculation of hot air.
Unbalanced load	The load on each leg should be as evenly balanced as possible and should not exceed rated current on any one leg.

GENERATOR PRODUCES MECHANICAL NOISE

CAUSE	CHECK AND REMEDY
Defective bearing	Replace bearing.
Loose or misaligned coupling	Tighten, realign, or replace coupling.
Belt slap or loose guards	Check belt tensioning. Check belt guard fasteners.

EQUIPMENT RUNS NORMALLY ON UTILITY POWER, BUT WILL NOT RUN ON GENERATOR

CAUSE	CHECK AND REMEDY
Distorted voltage waveform	Analyze load. Excessive SCR (thyristor) loading will cause distortion. Some equipment may be sensitive to distorted waveforms. Refer to Katolight.
Improper generator voltage or frequency	Check nameplates of devices comprising the load. Compare required voltage and frequency with that of the generator. Adjust driver speed and/or generator voltage as necessary to match generator output to load requirements.

CAUTION: Compare required voltage, frequency, and kVA with generator nameplate to ensure adequate generator capacity. If in doubt, consult Katolight for information regarding generator capacity.

SPECIFICATIONS

MODEL / FRAME SIZE	EXCITER RESISTANCE STATOR	ROTOR
281, 282, 283, 284	23.0	.120
361, 362, 363 -- three phase	23.5	.120
361, 362, 363 -- dedicated single phase	23.0	.135
431, 432, 433 -- three phase	20.33	.076
431, 432 -- dedicated single phase	18.0	.105

MODEL	GENERATOR RESISTANCE STATOR*	ROTOR	EXCITER FIELD NO LOAD VOLTS 480 V / 60 HZ	NO LOAD TERMINAL VOLTAGE WITH 12 VDC FIXED EXCITATION HIGH WYE / 60 HZ	HIGH WYE / 50 HZ
281PSL1500	4.20	.400	11.0	485	400
281PSL1501	4.15	.400	11.0	490	404
281PSL1502	3.20	.439	9.0	528	435
282PSL1503	2.00	.470	10.4	500	415
282PSL1504	1.51	.512	11.3	490	400
282PSL1505	1.00	.575	10.1	515	415
283PSL1506	.681	.654	11.0	495	400
283PSL1507	.480	.758	12.0	480	390
284PSL1508	.346	.875	12.0	480	375
361PSL1600	.381	.750	11.8	485	400
361PSL1601	.264	.810	12.5	475	385
361PSL1602	.181	.990	14.1	460	370
362PSL1604	.138	1.05	12.2	480	380
362PSL1606	.0980	1.20	10.8	500	405
363PSL1607	.0692	1.37	12.2	475	380
431PSL6202	.0214	.8114	15.1	440	360
431PSL6204	.0477	.6373	13.6	455	385
431PSL6206	.0371	.6793	13.82	455	370
431PSL6208	.0133	.715	12.20	475	390
432PSL6210	.0214	.8114	15.1	440	360
432PSL6212	.0226	.8656	14.1	445	385
433PSL6216	.01215	1.0672	16.2	425	345
433PSL6220	.01214	.9743	15.6	430	350

* Stator resistance measured line to line in a high wye connection.

DEDICATED SINGLE PHASE	GENERATOR RESISTANCE STATOR	ROTOR	EXCITER FIELD NO LOAD VOLTS / 60 HZ
281PSL1511	1.420	.381	8.3
281PSL1512	1.106	.395	8.1
281PSL1513	.632	.430	8.7
282PSL1514	.436	.450	9.2
282PSL1515	.240	.520	9.7
283PSL1516	.160	.620	13.3
284PSL1517	.0918	.760	12.2
284PSL1518	.0610	.857	16.6
361PSL1611	.0695	.750	17.5
361PSL1612	.0434	.857	16.1
361PSL1613	.0369	.926	13.6
362PSL1615	.0191	1.20	17.0
363PSL1617	.0119	1.35	23.0
431PSL1811	.0248	.516	9.9
431PSL1813	.0129	.615	13.8
432PSL1814	.00931	.643	15.1
432PSL1815	.00723	.852	11.2

PARTS LIST – SINGLE BEARING

Typical Generator Cross Section

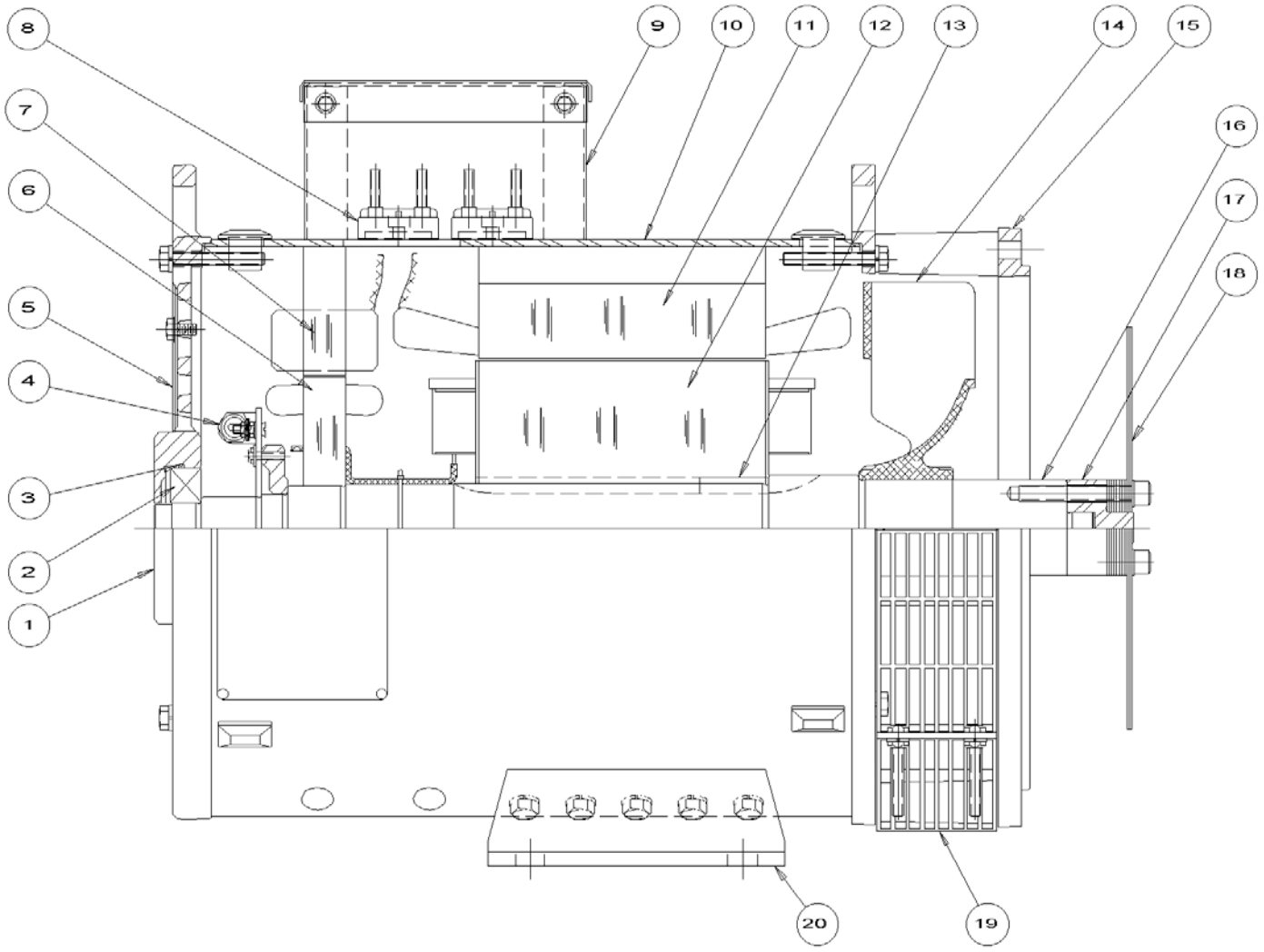

Reference Number	Part Name	Reference Number	Part Name
1	End Bracket (under end cover 360 & 430 frames)	11	Main Stator
2	Bearing	12	Main Rotor
3	O-ring (280 frame only)	13	Rotor Integral Keyway
4	Rectifier Assembly	14	Fan
5	Air Intake Screen (280 frame only)	15	Mounting Adapter (SAE)
6	Exciter Rotor	16	Shaft
7	Exciter Stator	17	Drive Hub
8	Link Board (terminal block)	18	Drive Disk (SAE)
9	Conduit Box	19	Exhaust Screen (drip cover not shown)
10	Generator Frame	20	Mounting Base

Note: Illustration above is a 280 frame MagnaPlus. Other Frame sizes are typical. Optional PMG not shown.
The generator model and serial numbers are required when ordering parts.

PARTS LIST – DUAL BEARING

Typical Generator Cross Section

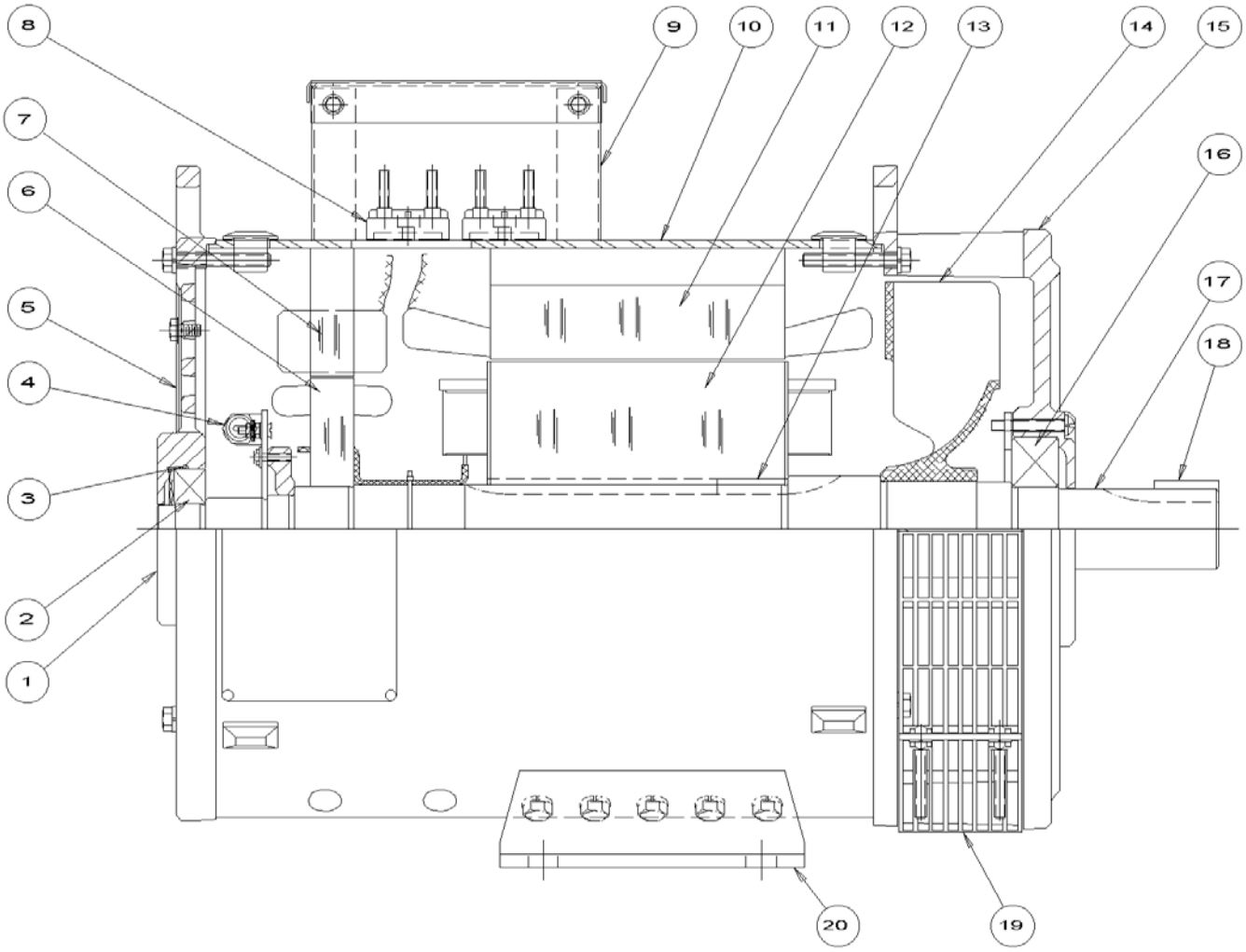

Reference Number	Part Name	Reference Number	Part Name
1	End Bracket (under end cover 360 & 430 frames)	11	Main Stator
2	Bearing (nondrive end)	12	Main Rotor
3	O-ring (280 frame only)	13	Rotor Integral Keyway
4	Rectifier Assembly	14	Fan
5	Air Intake Screen (280 frame only)	15	End Bracket (drive end)
6	Exciter Rotor	16	Bearing (drive end)
7	Exciter Stator	17	Shaft
8	Link Board (terminal block)	18	Key
9	Conduit Box	19	Exhaust Screen (drip cover not shown)
10	Generator Frame	20	Mounting Base

Note: Illustration above is a 280 frame MagnaPlus. Other Frame sizes are typical. Optional PMG not shown.
The generator model and serial numbers are required when ordering parts.

STAMFORD
power generation

FAULT FINDING MANUAL

For Self Excited and Separately Excited Generators

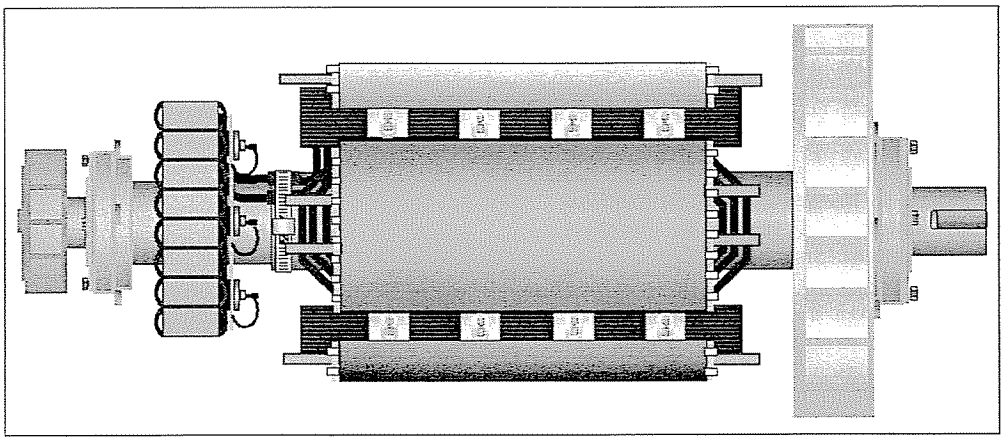

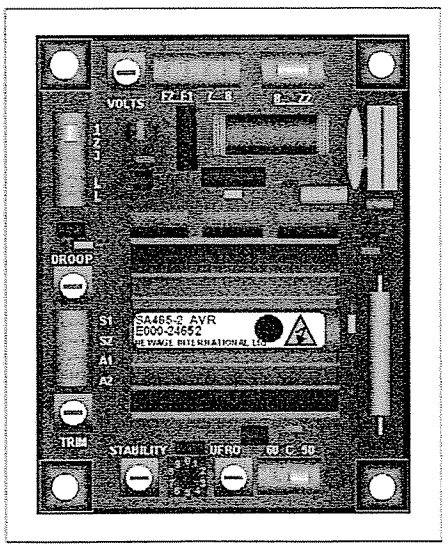

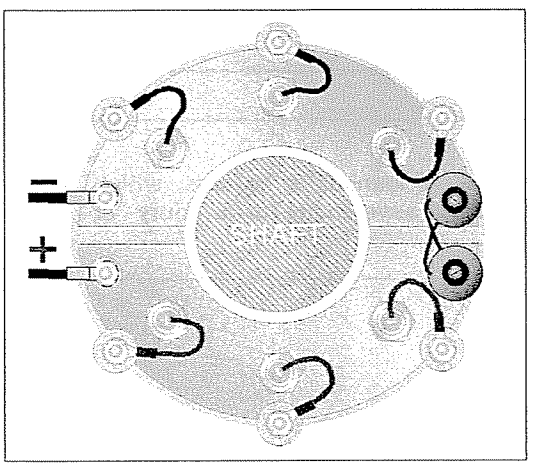

SAFETY PRECAUTIONS

Before testing the generating set, read the generating set Installation Manual, and this Fault Finding Manual, and become familiar with it and the equipment.

SAFE AND EFFICIENT OPERATION CAN ONLY BE ACHIEVED IF THE EQUIPMENT IS CORRECTLY INSTALLED, OPERATED AND MAINTAINED.

Many accidents occur because of a failure to follow fundamental rules and precautions.

ELECTRICAL SHOCK CAN CAUSE SEVERE PERSONAL INJURY OR DEATH.

- Ensure installation meets all applicable safety and local electrical codes. Have all installations performed by qualified Installation technicians.
- Do not operate the generator with protective covers, access covers or terminal box covers removed.
- Disable engine starting circuits before carrying out maintenance.
- Disable closing circuits and/or place warning notices on any circuit breakers normally used for connection to the mains or other generators, to avoid accidental closure.

Observe all IMPORTANT, CAUTION, WARNING, and DANGER notices, defined as:

Important ! Important refers to hazard or unsafe method or practice, which can result in product damage or related equipment damage.

Caution ! Caution refers to hazard or unsafe method or practice, which can result in product damage or personal injury.



Warning !

Warning refers to a hazard or unsafe method or practice, which CAN result in severe personal injury or possible death.



Danger !

Danger refers to immediate hazards, which WILL result in severe personal injury or death.

TESTING "LIVE" EQUIPMENT

It is essential that all test instruments are regularly checked for safety, and any connection leads, probes, or clips, are checked to ensure that they are suitable for the voltage levels being tested.



Danger !

Never attempt to test a "LIVE" generator unless there is another competent person present who can switch off the power supply or shut down the engine in an emergency.

Never expose "LIVE" connections unless you have created a safe working area around you. Make sure you have made all other persons in the immediate area fully aware of what you are doing.

Due to our policy of continuous improvement, details in this manual which were correct at time of printing, may now be due for amendment. Information included must therefore not be regarded as binding.

FAULT FINDING MANUAL

SECTION 1
Recommended Metering and Test Instruments

SECTION 2
Electrical Terminology

SECTION 3
Fault Finding method 'A', for All Generators

SECTION 4
Fault Finding method 'B', for Self-Excited Generators.
Automatic Voltage Regulator is powered from the Generator Output.

SECTION 5
Fault Finding method 'B', for Separately Excited Generators
Automatic Voltage Regulator is powered from the Permanent Magnet Generator.

SECTION 6
Parallel Operation and Fault Finding for All Generators

SECTION 1

RECOMMENDED METERING AND TEST INSTRUMENTS

To successfully carry out the various test procedures suggested in this manual, certain test instruments are essential. The following lists detail the basic requirements in this respect.

It should be noted that in addition to these instruments a comprehensive kit of tools is also essential. For fault finding purposes this need not include any specialised tools.

Item 1 - Multimeter

The Multimeter is a comprehensive test instrument for measuring voltage, current and resistance. It should be capable of measuring the following ranges:-

Voltage A C	0-250-500-1000 Volts
Voltage D C	0-25-100-250 Volts
Amperes D C	0-10 Amps
D C Resistance	0-10k (ohms) or 0-2k (ohms)
	0-100k (ohms) or 0-20k (ohms)
	0-1M (ohms) or 0-200k (ohms)

Item 2 – Tachometer or Frequency meter

This instrument is for measuring the shaft speed of the alternator and should be capable of measuring speeds between 0 and 5000 revolutions per minute, (RPM).

An alternative to the tachometer is the frequency meter (see Section 2 on Frequency and Speed, for details). However the alternator must be generating its normal output voltage for this instrument to be accurate.

Item 3 – Megger (Insulation test meter)

This instrument generates a voltage of 500V or 1000V, and is used to measure the resistance value of the insulation to earth (ground). It may be an electronic push button type, or a hand cranked generator type.

Item 4 - Clip-On Ammeter (Clampmeter)

Used to measure A C current, it consists of a pair of callipers, which are clamped around the conductor, and by means of a transformer action, gives an indication of the amperes flowing in the conductor. Useful ranges to have on this meter are:-

A C Amps 0-10-50-100-250-500-1000

Item 5 – Kelvin Bridge – low resistance meter

This instrument is used to measure resistance values below 1.0 ohm. They are bulky, and expensive, but are the only means of accurately measuring very low resistances, such as main stator and exciter rotor windings.
However, there are other methods of testing low resistance windings, and these are included in the various test procedures, i.e. Test Method A (Section 3). This section will enable the main generator windings to be tested while running the generator at normal speed without load.



It is essential that all test instruments be regularly checked for safety, and any connection leads, probes or clips checked to ensure that they are suitable for the voltage levels being tested.

Never attempt to test a "LIVE" generator unless there is another competent person present who can switch off the power supply or shut down the engine in an emergency.

Never expose "LIVE" connections unless you have created a safe working area around you. Make sure you have made all other persons in the immediate area fully aware of what you are doing.



MEDIUM/HIGH VOLTAGE
3.3 kVA to 11.0 kVA

Do not attempt to carry out tests on medium or high voltage generators without using specialised instruments and probes, with suitable protection equipment and procedures for grounding (earthing) the output terminals.

SECTION 2

ELECTRICAL TERMINOLOGY AND RESISTANCES
VOLTAGE AND CURRENT (AMPERES)

An AC Generator is designed to produce a voltage level suitable for the load to which it is connected. The control circuits are designed to automatically maintain this voltage level as the load is increased or decreased.

Sudden large changes in loading will produce temporary changes in the voltage. The control circuit is designed to recover to a stable condition as quickly as possible.
The current drawn from the AC Generator is determined by the amount of load connected to it. Current creates a temperature rise in the windings, hence the requirement for drawing air through the AC Generator by means of the fan. If the full load rated current is exceeded on any phase of the main stator windings, it will result in overheating in this winding. Similarly, any restriction in the flow of air through the machine will result in a rapid increase in the temperature of the windings.

Frequency (Hz) and Speed (RPM)

An AC Generator is a constant speed device, and should not be operated at speeds above 4% of the rated speed, or more than 1% below the rated speed.

Load changes will create temporary changes in the speed, but the engine must be capable of returning to the steady state condition within a few seconds.

The speed requirements for the AC Generator are determined by:-

(a) The frequency (Hz) requirement of the load
(b) The number of poles,(main rotor coils), in the generator

$$\text{Frequency (HZ)} = \frac{\text{N (speed) X P (pairs of poles)}}{\text{60 (sec's)}}$$

This can be shown more clearly in a chart: -

Frequency (Hz)	Speed (R.P.M.)	No. of Poles (rotor coils)
50	1500	4
60	1800	4
50	1000	6
60	1200	6
50	3000	2
60	3600	2

From this chart, a simple formula is produced to calculate the speed from the frequency, or vice versa.

4 pole machine 1 cycle (Hz) = 30 R.P.M.
6 pole machine 1 cycle (Hz) = 20 R.P.M.
2 pole machine 1 cycle (Hz) = 60 R.P.M.

Kilowatts (kW) kilo Volt Amperes (kVA) and Power Factors (pf.)

For an AC Generator to supply power for a load of 1kW, the prime mover (engine) driving the alternator must produce approximately 1.5 horsepower.

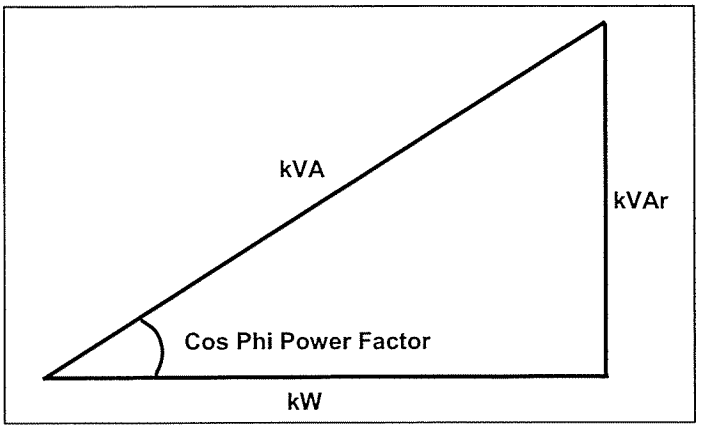

Kilowatts are calculated by the formula: -

$$kW = \frac{\text{Volts x Amperes x Power Factor}}{1000}$$

kVA (kilo Volt Amperes), are calculated by the formula:-

$$kVA = \frac{\text{Volts x Amperes}}{1000}$$

Both equations are multiplied by $\sqrt{3}$ (1.732) for a 3 phase machine.

Power Factor

The Power Factor (pf), is a measure of wasted current, which is a product of inductive loads such as motors, transformers, (magnetic circuits), and some forms of lighting.

The formula for calculating the Power Factor is:-

$$pf = \frac{\text{kilowatts}}{\text{kVA}}$$

Unity Power Factor (pf 1)

Purely resistive load, i.e. heating, tungsten filament lighting, has a power factor of one, (pf 1), and contains very little Wattless (inductive) load, which is power factor zero, (pf 0).
An AC Generator will deliver continuously the rated full load current at any power factor between pf 1 (unity) and 0.8. However, the prime mover, (engine), is greatly affected by the power factor. At pf 1, the kVA and kW are equal; therefore the engine is supplying 20% more kW load at pf 1, than it is at pf 0.8. It is important, therefore, that this is taken into consideration, when approaching 75% to 100% load current of the Generator, with a power factor higher than 0.8.

Lagging Power Factors

A Generator is designed to deliver the full load current at any power factor between unity and 0.8 lagging. Certain loads have a power factor lower than 0,8 lag, e.g. welding transformers; autotransformer, start motors, gas discharge lighting. A reduction in the full load (kVA), rating is required for a lagging pf lower than 0.8.

Leading Power Factors

Capacitive load e.g. some fluorescent lighting, power factor correction capacitor banks, produce leading power factor current. The latter is required by the Electricity authorities to improve the customers lagging power factor. The capacitor bank size is measured in kVAr (reactive).

A purely Capacitive load can cause the Generator control system, (AVR), to loose control, creating voltage instability, and possible high voltage from the Generator.
This is due to the fact that, unlike most loads, which are pf 1, (unity) or lagging pf, a leading pf load current will cause the Generator excitation voltage to decrease, as the load current increases.
Eventually the control system will be unable to control the Generator excitation level, and voltage instability will occur.
The degree of instability is determined by the kVAr size of the capacitors, relative to the kVA size of the alternator.

Capacitive load can present a problem for mains failure (standby) Generators. When the mains electricity supply fails, all motor, (inductive), load is disconnected by the individual contactors. Subsequently, when the Generator is connected to the system, the load will mainly consist of lighting, and possibly the power factor correction capacitors. In this situation the AC Generator will see a very low, (leading), power factor, and may become unstable, and/or generate high voltage.

In order to prevent this situation, it is advisable to ensure that the power factor correction capacitors are switched OFF when the generator takes the initial load.

Further advice in this respect may be obtained from Newage–AVK SEG if required.

Resistances - measuring component values

When fault finding it is necessary to measure the resistance values of components and windings, and compare them with known normal values, in order to identify a faulty winding. The normal resistances of the windings are given in the winding resistance charts, in the generator installation and maintenance handbooks, service and maintenance section.

Resistance values above 10 ohms can be measured accurately with a multimeter. Between 0.5 and 5 ohms a multimeter has a limited accuracy, and other test methods may be adopted.

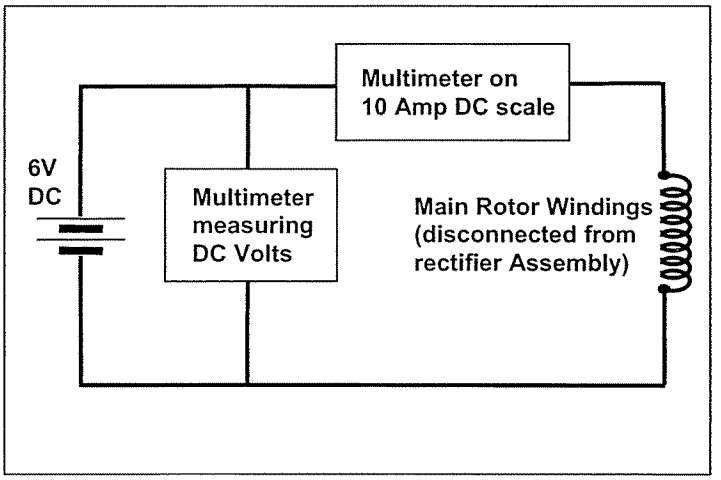

Resistances between 0.5 And 5 Ohms

The resistance value of a winding such as a brushless main rotor will be between 0.5 and 3 ohms. A multimeter may not give an accurate enough reading at these levels. If a Wheatstone Bridge Resistance Meter is not available, an accurate measurement can be obtained by means of a battery supply, using a Multimeter in series on the 10 Amps D.C. range. Most Multimeters have this current range, or alternatively, a battery charging Ammeter could be used instead).

Using 6 volt battery cells the resistance of the winding can be calculated i.e.

$$\frac{\text{V (volts)}}{\text{I (amps)}} = \text{ohms (resistance)}$$

The resultant can be compared with the correct value given in the resistance charts, and this method can be used for any resistance greater than 0.5 ohm.

Below this value the current in the circuit would drain the battery, and it is therefore impractical to use this method.

Very low resistance values (below 0.5 ohm)

Main stators and exciter rotors are included in this category.

These values can only be measured accurately with a special instrument, such as a Kelvin bridge test meter.
The test leads are equipped with special spiked probes, which penetrate the surface of the contact, ensuring accurate reading.

The generators main stator windings can also be tested by means of separately exciting the machine (see, Section 3, Test Method A), thus partly eliminating the need to have this specialised type of instrument when fault finding in the field.

Diode Testing

A Diode has two resistance values, forward and reverse,
These can be measured with a multimeter as shown in the diagram below.
An arrow printed on the diode body identifies the positive side of a diode.

The forward resistance is being measured in Fig. A with the positive meter lead connected to the forward side of the diode.
In Figure 'B' the meter leads have been reversed, and the reverse resistance is being measured.

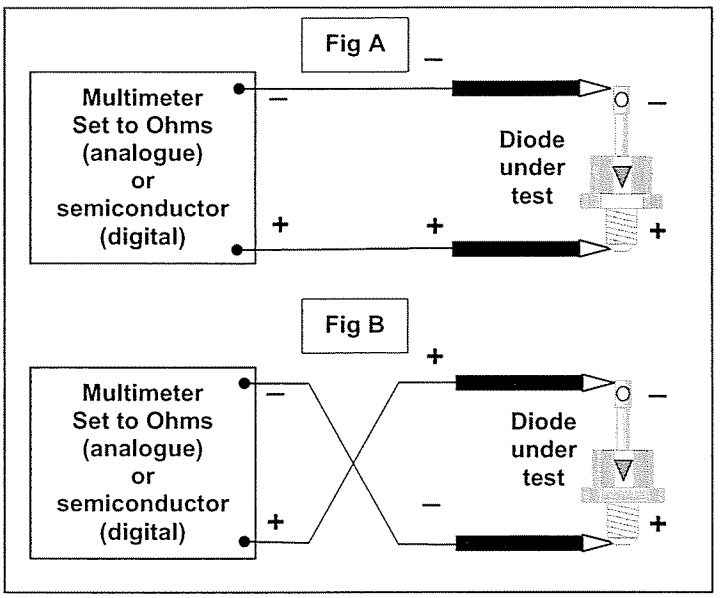

An electronic digital instrument will read true electron flow, hence the resistance polarity readings will be reverse to conventional current flow, i.e. forward and reverse readings will be reversed.
A Digital Multimeter usually has a semiconductor test scale on the selector switch, marked as shown :-



This measures true electron flow, and will give a forward, (indication reading only), or reverse (no reading) indication.

Using an analogue meter on resistance scale, the forward resistance varies considerably, depending on the internal impedance of the Multimeter, and the diode type.
A typical reading would be between 20 and 100 ohms.

The reverse resistance must be very much higher, usually in excess of 100k ohms, (100,000 ohms).

A faulty diode will give a reading in both forward and reverse directions (short circuit), or no reading in either direction, (open circuit).

Simple Alternative Diode Test Circuit

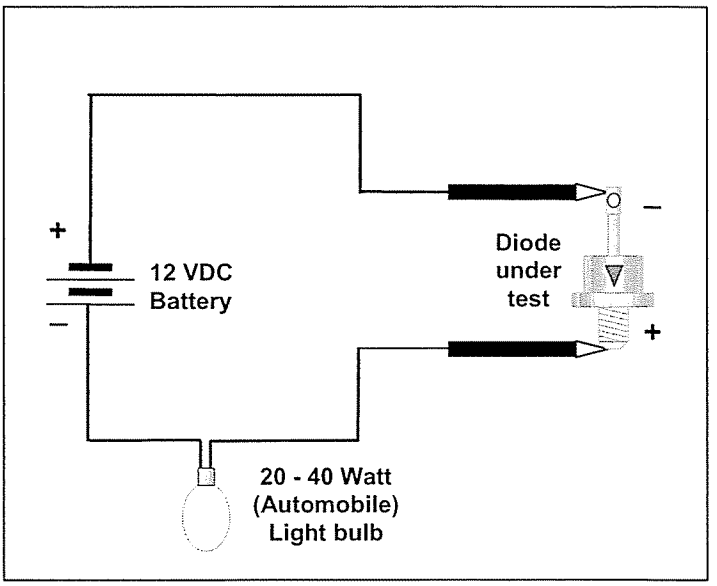

A good diode will light the bulb in only one direction. It should not light when test leads are reversed on the diode pin and base.

A faulty diode will light the bulb in both forward and reverse directions (short circuit diode), or no light in either direction, (open circuit diode).

If one or more diodes are found to be faulty, always change the complete set of diodes.

Insulation Resistance to Earth

Low Voltage Generators 100 – 690VAC.

Note
When conducting high voltage test to earth, it is advisable to either disconnect or short out any electronic devices, such as the Automatic Voltage Regulator, (AVR), and Main rotor diodes.
Short circuiting the terminals can be achieved with a piece of fuse wire, which must be removed immediately after the tests are completed.

Caution: Running the Generator before removing the short circuit connection could seriously damage the Generator.
When Megger testing a machine, failure to protect the voltage control unit and diodes could result in permanent damage to one or more of the electronic components.

The resistance of the insulation between the copper conductors and the frame of the machine, (earth or ground), is measured by means of a high voltage tester, or "Megger", which applies a D.C. potential of 500 or 1000 volts across the winding insulation.

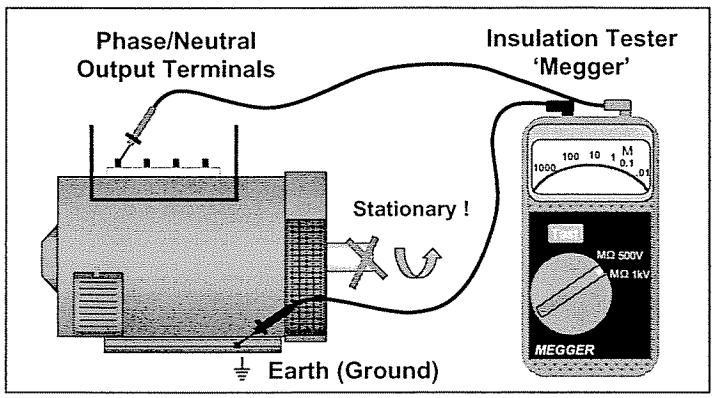

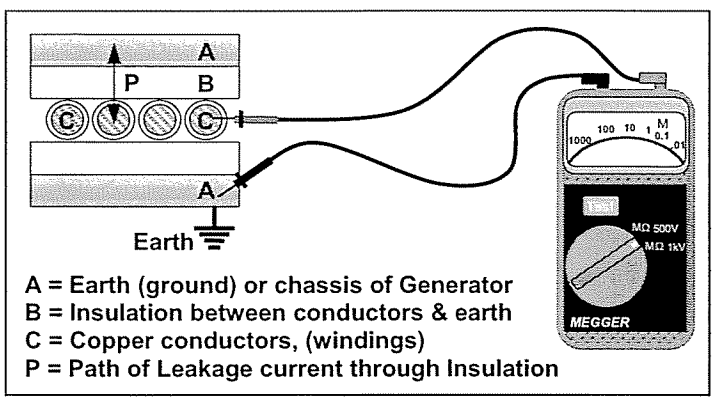

The high voltage causes a current to 'leak' through the insulation system. This current produces an output reading on the Insulation tester ('Megger'), which is measured in Megohms (resistance to earth or ground). A normal value for a low voltage Generator winding should be higher than 1 Megohm to earth.

Generators with an output voltage of between 100V to 600V should be tested as above. If the output winding (stator) is lower than 1 Megohm to earth, the windings should be cleaned, dried, or removed to a workshop for complete refurbish.

Insulation Resistance to Earth

Medium to High voltage Generators, 1k Volt or higher

High voltage generators are capable of storing a dielectric (capacitive) charge in the main stator windings, following a high voltage insulation test.

Danger !

Any testing of the main stator must be followed by a discharge to earth or ground for at least 1 minute. Do not attempt to touch the main output terminals until all residual charge has been discharged.

Insulation testing of Medium and High voltage generators .

The effectiveness of a particular on-site test will depend to a large extent on the machine application. In many situations, measurements of insulation resistance and polarisation index only will be appropriate. More detailed testing involving loss tangent, dielectric loss analysis, partial discharge measurement, is undertaken at intervals in order to establish the extent of deterioration of insulation condition. Other tests such as high voltage withstand tests are particularly effective for investigative work in order to identify the onset of fault conditions.

Polarisation Index Test (P.I.)

The P.I. test is used as a guide to the dryness, cleanliness and safety of the winding insulation system.

A special motorised insulation tester is required, which can maintain a test voltage of 1 - 2.5kV, (medium voltages), or 5kV, (high voltage), for a period of 10 minutes.

Readings are taken (in Megohms) following a 1 minute and 10 minute time interval: -

The P.I. index is obtained by the formulae:-

$$\text{P.I.} = \frac{\text{1 Minute reading}}{\text{10 Minute reading}}$$

The resultant ratio is called the P.I. index, and should be a minimum of 2 at 20°C.
A P.I. index below 1.5 suggests the windings are wet, dirty or faulty, and should be cleaned, dried, and refurbished as necessary.

Caution! **Do not test any winding other than the main stator with this method.**

SECTION 3

FAULT FINDING 'METHOD A' FOR ALL GENERATORS SEPARATELY EXCITING WITH A BATTERY



Danger !

It is essential that all instruments be regularly checked for safety, and any connection leads, probes or clips checked to ensure that they are suitable for the voltage levels being tested.

Never attempt to test a "LIVE" generator unless there is another competent person present who can switch off the power supply or shut down the engine in an emergency.

Never expose "LIVE" connections unless you have created a safe working area around you. Make sure you have made all other persons in the immediate area fully aware of what you are doing.

Caution ! Insulation Resistance to Earth

Before conducting the following tests, the Insulation of the main stator windings should be checked, in the methods described in Section 2 , 'Insulation Resistance to Earth'.
Minimum Insulation to Earth for the Main Stator is 1.0 Megohm.

Fault Finding Method 'A'

Success with this method depends upon each test being completed before proceeding to the next, unless otherwise stated.
Every component in the alternator is checked regardless of the symptoms of the fault, with the exception of the voltage control system, which is covered in test Method B, Sections 4 & 5.

1. Set up for test

Disconnect the Exciter Stator leads positive and negative, from the Automatic Voltage Regulator (AVR).
These terminals are marked X+ (F1), and XX- (F2), respectively.

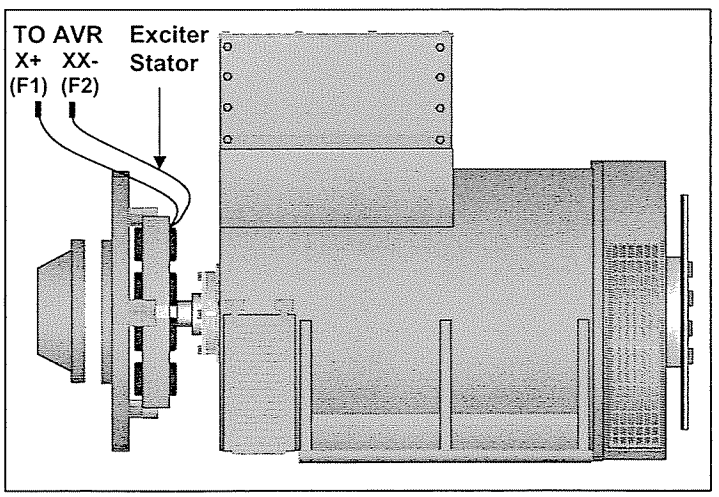

Note
Ensure that the correct two exciter leads are identified, by physically tracing them back to the exciter stator windings, fitted inside the non-drive end bracket of the Generator.

2. Check the Exciter Stator Resistance

Check the resistance value of the exciter stator across these two leads (approximately 18-30 ohms) with a Multimeter. Refer to Operation and Maintenance manual for correct values.

3. Battery Test

Connect the D.C. battery supply to the exciter stator leads, positive to X+ or orange (F1), negative to XX- or black (F2).

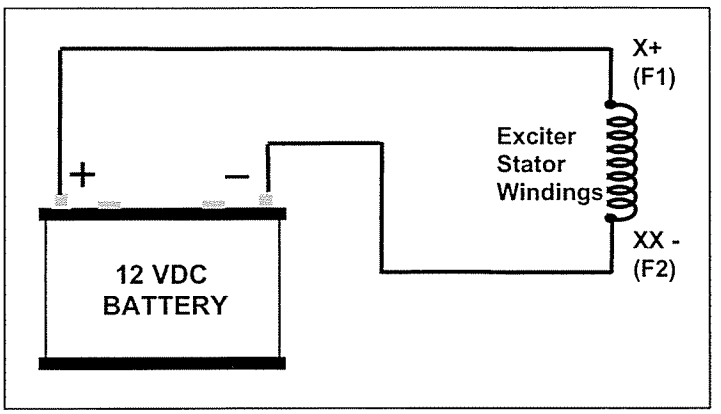

A variable source can be applied to the circuit, as shown: -

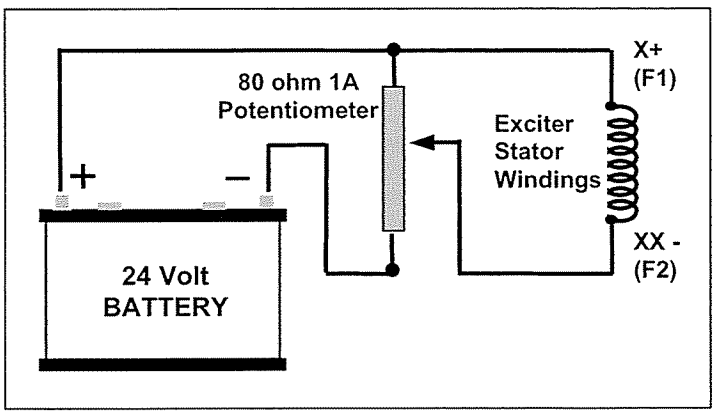

4. Run the Generator at Nominal (normal) Speed.

Ensure that the speed is within 4% of the nominal. The engine speed must be correct, to avoid misleading test results.

5. Excitation Voltage at No Load

It is essential that ALL LOAD is disconnected from the machine, and that the speed is correct.

Check the Battery Voltage after connecting to the Exciter Stator, a minimum of 12 VDC is required.

When testing with a fixed battery supply, any difference between the figures below, and the actual battery voltage, will effect the test results, and should be taken into account. For example, if your battery voltage is 10% higher or lower than the figures shown, you can expect the Generator voltage to be equally 10% higher or lower than expected.

The following chart gives the approximate D.C. battery voltages required to produce nominal output voltage ± 10% from the Generator at no load.

FRAME SIZE	EXCITATION AT NO-LOAD
BC16 & 18	10 -12 VOLTS D.C.
UC22 & 27	10 -12 VOLTS D.C.
HC / SC 1	10 -12 VOLTS D.C.
HC / SC 2	10 -12 VOLTS D.C.
HC / SC 3	9 - 11 VOLTS D.C
C20, C30, C40	9 -11 VOLTS D.C.
HC / SC 4 , 5	10 -12 VOLTS D.C.
C45 ,C50, C60, C604	11 -12 VOLTS D.C.
HC / SC/ AC 6	12 -13 VOLTS D.C.
HC / SC / AC 7 & F8	12 -14 VOLTS D.C

6. Checking the Generator Output Voltage

Using a Multimeter, test the output voltage across the main terminals, Phase to Phase, and Phase to Neutral.
If the output voltage from the main stator is within 10% of the nominal, or higher than the nominal, and balanced across phases, this indicates that the main stator, the, main rotor, exciter stator, exciter rotor, and main rectifier diodes, are all functioning correctly.
Proceed directly to Test Number 13.

If the output is unbalanced phase to phase, or more than 10% below the nominal, this indicates that a fault exists in one of the above components, and the following tests must be conducted

7. Checking the Main Stator Winding

The voltages between phases, and each phase to neutral, should be balanced, to within 1% of the nominal voltage.
On a single-phase machine the voltage between L1-L4, and L2-L4 or U-N and W-N, must be balanced.
If the voltage is 10% or more below the nominal voltage, but is balanced within 1% phase to phase, proceed to test number 9.

If the voltage is unbalanced by more than 1%, this indicates that a fault exists with the main stator windings.
This test should be repeated with all external connections removed from the Generator terminals, to eliminate the possibility of external shorts in the output cables, or the circuit breaker.
Further tests may be made on the resistance values of the main stator windings with a Kelvin Bridge resistance test meter.
(refer to the Operation and Maintenance manual for main stator winding resistance values).

8. Symptoms of a Main Stator Fault

A fault in the main stator windings will produce short circuit currents between the coil turns in the windings.
When separately exciting with a battery, the current will also create heat in the damaged winding, which can also be heard as a slight loading of the engine.
The three fault symptoms: 1.Unbalanced Voltages. 2. Heat and/or a burning smell from the windings. 3. Engine sounds loaded, are all indications of a faulty main stator winding.
A faulty winding must be repaired or replaced.

9. Voltage is Balanced but reading Low

If the output voltage is more than 10% below the nominal voltage, but is balanced within 1% Phase to Phase, (or Phase to Neutral), the main stator is OK, but there is a fault elsewhere.
This indicates that a fault exists in either the main rotating rectifier assembly, (diodes and Varistor), or one of the excitation windings, (the main rotor, or exciter stator, or exciter rotor).
First check that the D.C. battery supply is not lower than the figure given in Paragraph 5, and that the engine speed is correct. This could give misleading results if incorrect.

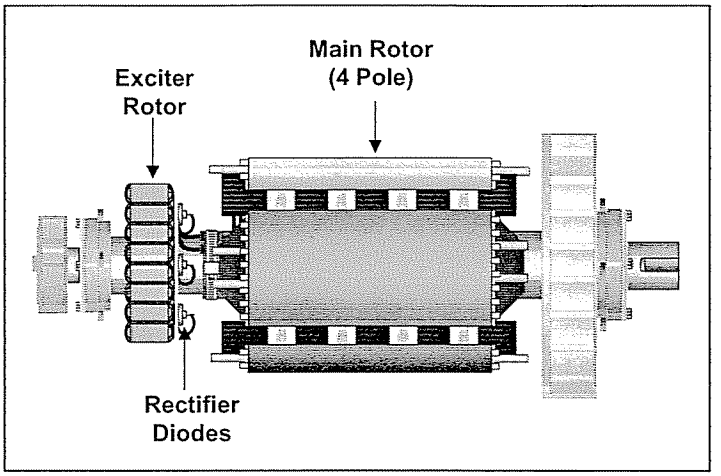

10. Testing the Rotating Rectifier Assembly

The diodes on the main rectifier assembly can be checked with a multimeter. The flexible leads connected to each diode should be disconnected at the terminal end, and the forward and reverse resistance checked. (See section 2, diode testing).
The rectifier assembly is split into two plates, positive and negative, and the main rotor is connected across these plates. Each plate carries 3 diodes, the negative plate carries the negative based diodes, and the positive plate carries the positive based diodes. Care must be taken to ensure that three identical polarity diodes are fitted to each plate. When fitting the diodes to the plates they must be tight enough to ensure a good mechanical and electrical contact, but should not be over tightened. The recommended torque tightening is 4.06 to 4.74 Nm, (14 to 17 kg/cm).

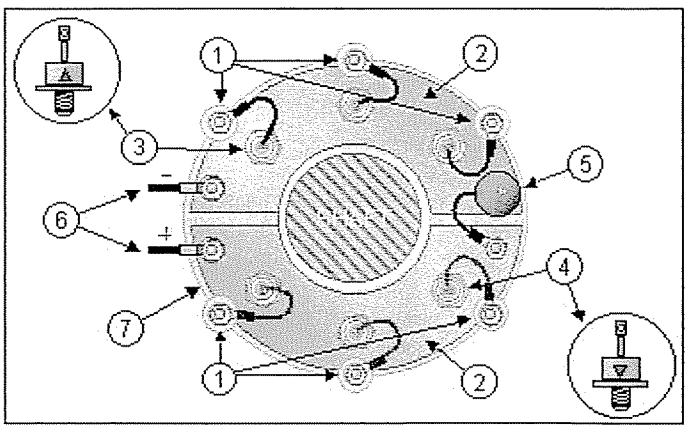

Rectifier Components

1. A.C Connection Stud
2. Rectifier Plates
3. Diodes - 3 X Negative
4. Diodes - 3 X Positive
5. Surge Suppressor (Varistor)
6. Main Rotor Leads
7. Rectifier Hub

11. Testing the Surge Suppressor (Varistor)

The Surge Suppressor (Varistor), is a protection device, which prevents high voltage transients from damaging the main rectifier diodes.
High Voltage transients are created by fault conditions in the distribution system. The Voltage transient returns back to the Generator output terminals, enters the main stator windings, and by mutual inductance, is transferred to the main rotor windings, and the main rectifier assembly.
The Surge Suppressor can be tested with a Multimeter on Megohms range.
A good Surge Suppressor should have a very high resistance, (more than 100 Megohms in either direction).
A faulty Surge Suppressor will be either open circuit (usually showing signs of burning) or short circuit in both directions.
The Main Rectifier will work normally with this device removed. However, it should be replaced as soon as possible, to avoid diode failure in the event of further transient fault conditions.

Occasionally, a very high transient may totally destroy the Surge Suppressor. This would result from extreme fault conditions, such as lightening, (electric storms), close to overhead distribution lines, or out of phase synchronisation of the Generator, when paralleled to multiple Generator systems, (or the Mains, Utility, supply).

In the event of a Surge Suppressor failure, all rectifier diodes should be replaced, including any which appear to test OK.

12. Testing the Main Excitation Windings

After establishing and correcting any fault on the rectifier assembly, the battery test should be repeated, from paragraph 6, and the output voltage checked.
If the output voltage is still more than 10% below the nominal voltage when separately excited, this indicates that the fault must be in one of the excitation windings.
To test the main rotor, exciter stator and exciter rotor winding, the resistance values must be checked against correct values, which are given in the Operation and Maintenance handbook, supplied with the generator.
Refer to the Service and Maintenance section, for the winding resistance charts, specific to each Generator type and size.
Note. The charts require identification of the frame size, number of rotor poles, followed by the main stator and rotor core length (A, B, C–G, H, J etc). The Main Stator core length and winding number are shown on the Generator nameplate.
If in doubt, refer to the factory, with the Generator serial number or machine I.D number, for identification.

Exciter Stator

The exciter stator resistance is measured across leads X+ and XX- (F1 and F2), which should be disconnected from the Automatic Voltage Regulator (AVR), terminals.
A standard Multimeter, set on the lowest resistance range, will be suitable for this test.
The exciter Stator winding Insulation to earth should also be tested with a 'Megger'. As a low insulation can effect the AVR performance. Minimum value 1 Megohm. (See section 2 for details).

Exciter Rotor
The exciter rotor is connected to the 6 X AC connection studs on the Main Rectifier assembly.
Disconnect the 6 leads from the AC connection studs, and check the resistance value across three of the leads, which are connected to the same polarity diodes, (bolted to the same rectifier plate). The resistance value is very low, and requires a Kelvin Bridge test meter for accurate results. A visual inspection will usually identify any burnt or damaged windings.

Main Rotor
The main Rotor leads are connected to the main rectifier plates. Disconnect one of the leads to check the resistance value.
A good quality Multimeter will measure resistances of 0.5 to 2 ohms with reasonable accuracy, however if the resistance is found to be lower than the quoted figure, it should be verified with a more accurate measurement.

13. Testing the AVR Sensing Supply (feedback).

Checking the sensing supply from the main stator is the final test, which can be carried out while separately exciting the Generator with a battery supply. Make sure the output voltage is approximately correct, I.e. within 10% of the nominal voltage).

The previous tests should have cleared any fault in the windings or rectifier assembly and the correct output obtained from the main stator with the battery.

With the Generator running at nominal voltage, the sensing supply should be between 190 and 240 volts. If the supply is incorrect, or unbalanced, the fault should be traced back via the wiring circuit to the Main Stator connections

Two phase sensed AVR's, MK11A, SX440, MX341, SX460, SA465
The sensing supply is across AVR terminals 2 and 3, (AVR types MX341 and SX440), or 7 and 8 (AVR types SX460 and SA465).

Note. Generators supplied before 1989. The parallel droop CT, and close regulation CT, (when fitted), is connected into the sensing supply via a burden resistor, fitted in the terminal box.
Refer to the Operation and Maintenance manual supplied with the Generator for details.

Three phase sensed AVR's, MX321, MA325, MA327
The sensing supply is connected to the AVR terminals marked 6, 7, and 8.

Note 1. The Sensing Supply is connected via an isolation transformer, or an isolation module, (PCB), fitted in the Generator terminal box. Check primary and secondary of transformer, or input and output of PCB.

Note 2. Generators supplied before 1989. The parallel droop CT, and close regulation CT, (when fitted), is connected into the sensing supply via a burden resistor, fitted in the terminal box.
The sensing supply is connected via a separate 3 Phase Sensing unit, the sensing supply leads 6,7, & 8 are connected to the 3 phase sensing unit, which has a DC output to the AVR.

Refer to the Operation and Maintenance manual supplied with the Generator for details.

SECTION 4
SELF EXCITED CONTROL SYSTEM
TEST METHOD B
FAULT SYMPTOMS AND REMEDIES AT NO LOAD

SYMPTOM	POSSIBLE CAUSE	TEST AND REMEDIES
NO VOLTAGE (NO LOAD)	1) Voltmeter connected incorrectly, or faulty.	Check and verify voltage at Generator terminals with a multimeter.
	2) Loose broken or corroded connections.	Check all auxiliary terminals. Check the AVR push on terminals for tightness. Repair or renew where necessary.
Loss of Residual Voltage 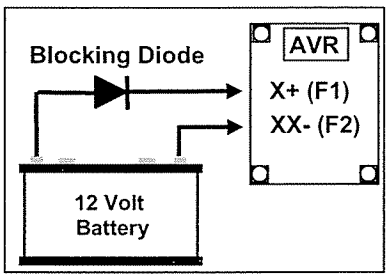 	3) Loss of residual can occur after :- (i) Many years storage prior to use. (ii) Reversal of the Exciter Stator magnetic field while 'flashing' with a battery. (iii) Rewind of the Exciter Stator. (iv) Mechanical 'shock' to the Exciter Stator laminated core, (where residual magnetism is stored). **Note.** Series 3 AVR systems with Permanent Magnet Generator do not rely upon residual voltage for voltage build up.	With Generator running at rated speed, without load, briefly connect a 12 volt D.C. battery supply, with a blocking diode in one lead, to AVR terminals X+ (F1) and XX- (F2).(see figure left). Maximum connection time 1 second. **CAUTION!** **Never connect a battery to the AVR terminals, without a blocking diode. In most cases this will destroy the AVR power devices.** **Battery polarity MUST be correct!**
NO VOLTAGE (NO LOAD)	4) Very low insulation resistance to earth (ground),on exciter stator or main stator.	Check the insulation resistance value with a Megger (see section 2). (Disconnect AVR during this test, and remove any Neutral earth connection).
	5) Surge suppressor on main rotating rectifier short circuit.	Check surge suppressor resistance (see Section 3 Test Method A).
	6) Main rectifier diode(s) short circuit.	Carry out Test Method A, Section 3. Replace where necessary. Check diodes (See Section 2)
	7) Winding fault. Open circuit or short circuit on any winding in the machine.	Carry out all tests as listed in Test Method A. Check winding resistance values.
	8) Exciter stator polarity reversed by battery tests. Also see "Loss of Residual Voltage" which may be caused by polarity reversal.	Re-connect battery to exciter stator ensuring that polarity is correct, and re-test. Restore residual magnetism as Item 3 above.
	9) Fault in AVR.	Replace the AVR and re-test machine.
	10) Load applied to machine during run up of engine.	The voltage may not build up until the load is disconnected from the machine. Open circuit breaker and re-test.
	11) Open circuit power supply from main stator to AVR terminals P2, P3, P4. (SX440), or 7 and 8 (SX460 and SA465).	Separately excite machine as per test method A, Section 3. Check voltage across AVR terminals P2, P3, P4, or 7 & 8. AVR power supply should be between 190 to 240VAC.

SYMPTOM	POSSIBLE CAUSE	TEST AND REMEDIES
LOW VOLTAGE (NO LOAD)	1) Engine speed low. Under frequency protection (UFRO) circuit activated.	Check AVR LED. If lit, UFRO is activated, indicating low speed. Check speed with tachometer. Adjust governor control to nominal speed, or up to maximum (+4%) of nominal speed.
	2) AVR 'VOLTS' adjust, or external hand trimmer control incorrectly set.	Adjust voltage on AVR 'volts' trim, or remote trimmer. Ensure that speed is correct, and UFRO is OFF. (See above).
	3) Voltmeter faulty or sticking.	Check and verify voltage across machine output terminals, with a Multimeter.
	4) Fault in AVR.	Replace AVR and re- test.
	5) Loose broken or corroded connections.	Check the wiring for poor connections. Repair or replace where necessary.
	6) Fault on power supply from main stator.	See item 11, previous test under "No voltage, at no load".
HIGH VOLTAGE (NO LOAD)	1) Sensing supply from Main Stator to AVR open circuit or too low.	Check sensing supply voltage, as per Test Method A, Section 3, (item 13).
	2) AVR 'VOLTS' control or hand trimmer incorrectly set.	Adjust as necessary. Ensure that the engine speed is correct first.
	3) Sensing supply transformer faulty.	AVR sensing supply circuit via dropper transformer, (4 or 6 wire Generators), or sensing PCB. Check sensing supply as per Test Method A, Section 3, (item 13).
	4) Burden resistor, fitted in AVR sensing supply, corroded or open circuit. (Pre 1987 Generators only.)	A fault on the burden resistor can create a high voltage condition. Check tapping bands. Normal resistance value 215 ohms.
	5) AVR faulty.	Replace AVR and re-test.
	6) Loose, broken or corroded connections.	Check connections on auxiliary terminal board and AVR terminals. Repair or replace if necessary.
UNSTABLE VOLTAGE (NO LOAD)	1) Engine governor unstable (hunting).	Check for speed instability with a frequency meter, or tachometer. Sometimes this problem will clear when a load is applied to the engine.
	2) AVR Stability settings.	Check AVR stability links, adjust stability potentiometer.
	3) Loose or corroded connections.	Intermittent voltage fluctuations can be created by poor connections. Check auxiliary and AVR terminals.
	4) Intermittent earth (low insulation resistance).	Megger all windings, (see section 2), including Exciter Stator, low insulation resistance can effect the AVR.
	5) Faulty AVR.	Check AVR for corrosion or broken components. Replace AVR and re-test
	6) Voltmeter faulty/unstable.	Panel mounted voltmeters are sensitive to vibration. Check and verify readings.
UNBALANCED VOLTAGE (NO LOAD).	1) Fault on main stator windings.	Disconnect all external leads to Generator and re-test. Separately excite, (Test Method A Section 3). A winding short will get hot, and engine will sound slightly loaded. Shut down set and check by hand for hot spots.

FAULT SYMPTOMS AND REMEDIES WHEN ON LOAD

SYMPTOM	POSSIBLE CAUSE	TEST AND REMEDIES
UNBALANCED VOLTAGE (ON LOAD).	1) Single-phase loads (phase - neutral) unevenly distributed over the three phases.	Check current in each phase with clip-on ammeter. The full load rated current must NOT be exceeded on any individual phase. Re-distribute load if necessary.
UNSTABLE VOLTAGE (ON LOAD).	1) Engine governor unstable (hunting)	Check with a frequency meter or tachometer for speed variations due to governor 'hunting', or cyclic irregularities in the engine.
	2) Leading Power Factor load created by power factor correction capacitors.	Isolate the power factor correction capacitors until sufficient inductive load has been applied. (See Power Factors, Section 2).
	3) Fluctuations in load current, (motor starting, or reciprocating loads).	Check the load current on a stable supply, i.e. mains, or separately excite the machine. A variable D.C. supply is required for on load separate excitation tests. (see test method A, section 3).
	4) Non linear load creating waveform distortion. (Contact factory for further information on non-linear loads).	Use Permanent Magnet Generator (PMG), powered control system (AVR).
	5) AVR stability incorrectly adjusted.	Adjust AVR, until voltage stabilises.
HIGH VOLTAGE (ON LOAD)	1) Unbalanced load.	Check voltages on all phases. If unbalanced, re-distribute loading over three phases.
	2) Leading Power Factor load (capacitor banks).	Check excitation volts across X+, (F1) and XX- (F2). A leading power factor will give an abnormally LOW DC excitation. Remove power factor correction equipment at low loads (see Power Factors Section 2).
	3) Parallel droop current transformers reversed.	Check for droop reversal. (See section 6, parallel operation).
	4) Burden resistor incorrectly set across improved regulation transformer. (Pre 1989 machines only).	Reduce the amount of resistance across the improved regulation transformer until on-load voltage is correct.
POOR VOLTAGE REGULATION (ON LOAD)	1) Large speed droop on engine. AVR UFRO protection activated.	Check that the speed droop from no load to full load is no greater than 4%. Check AVR LED, if LIT, increase engine speed.
	2) Unbalanced load.	Check voltage and load current on all phases. If unbalanced, redistribute the load more evenly across the phases.
	3) Parallel droop circuit incorrectly adjusted, or requires shorting switch for single running.	The droop circuit will give additional voltage droop of -2½ % at full load 0.8 pf. For single running machines this can be improved by fitting a shorting switch across the droop CT input, (S1 – S2), on the AVR. (Pre 1989 machines, short across the burden resistor in the terminal box).
	4) Voltage drop between machine and load, due to I^2R losses in supply cable. (This will be made worse by motor starting current surges, etc).	Check the voltage at both ends of the cable run at full load. Differences in voltage indicates a volts drop along the cable. In severe cases, a larger diameter cable is required.
	5) Improved regulation equipment reversed. (Pre 1989 machines only).	Reverse the secondary leads on the transformer, and re-test on load.

SYMPTOM	POSSIBLE CAUSE	TEST AND REMEDIES
POOR VOLTAGE REGULATION cont.. (ON LOAD)	6) Fault on main rectifier or excitation windings.	Check the no-load excitation volts across AVR X+ (F1) and XX- (F2). Compare with the D.C. voltages as listed in Test Method A Section 3. If much higher than listed, carry out Test Method A.
	7) AVR Under frequency protection circuit, (UFRO), activated.	Check AVR LED, If lit, UFRO is activated, (engine speed is low). Check engine speed and adjust to correct nominal speed, (or frequency).
POOR VOLTAGE RESPONSE TO LOAD SURGES OR MOTOR STARTING	1) Engine fault or engine governor unable to respond, (speed drop too low).	Check performance of engine during application of load. Check if AVR LED is lit during motor starting. Check if AVR 'DIP' or 'DWELL' engine relief circuits are activated. Adjust as necessary. (See AVR instruction sheet for details).
	2) Parallel droop circuit incorrectly set.	Too much droop will increase voltage dips when motor starting. Fit shorting switch for single running Generators. (See parallel section 6).
	3) Load surges exceed 2.5 times the full load current.	Check load surges with a clip-on ammeter. Voltage dip may be excessive if the current exceeds 2.5 times full load. Refer to factory for motor starting calculations.
	4) Voltage drop between Generator and load, due to I^2R losses in the cable. This will be worse during current surges (motor starting etc).	Check the voltage at both ends of the cable run at full load. Differences in voltage indicates a volts drop along the cable. In severe cases, a larger diameter cable is required.
	5) Motor contactors dropping out during starting, (large current surges, Voltage dips greater than 30%).	All symptoms and remedies in this section may apply to this problem. Refer to factory for typical voltage dips.
	6) AVR "Stability" control incorrectly adjusted.	Adjust AVR 'Stability' control anticlockwise until voltage is unstable, then slightly clockwise until stable.
	7) Fault on windings or rotating rectifier.	Any fault in this area will appear as high excitation voltage across X+ (F1) and XX- (F2), higher than figures listed in Section 3. Complete Test Method A Section 3
	8) AVR UFRO and/or engine relief circuit activated during motor starting.	Check performance of engine during application of load. Check if AVR LED is lit during motor starting. Check if AVR 'DIP' or 'DWELL' engine relief circuits are activated. Adjust as necessary. See AVR instructions for details.
	9) Faulty AVR.	Replace and re-test on load.

SYMPTOM	POSSIBLE CAUSE	TEST AND REMEDIES
LOW VOLTAGE (ON LOAD)	1) Engine speed droop greater than 4%.	Check if AVR LED is lit, UFRO is activated, (low speed indication).Check engine speed no load and full load. Engine governing should be within + 4% and –1% of nominal speed. Reset as necessary.
	2) Under frequency protection circuit operational (UFRO).	Check AVR LED. If lit, UFRO is activated, increase engine speed to correct levels.
	3) Fault in AVR power supply from main stator.	Separately excite machine as per test method A, Section 3. Check voltage across AVR terminals P2, P3, P4, or 7 & 8. Normal AVR power supply should be between 190 to 240VAC.
	4) AVR faulty.	Replace AVR and re-test.
	5) Fault on winding or rotating diodes.	Any fault in this area will appear as high excitation voltage across X+ (F1) and XX- (F2), higher than figures listed in Section 3. Complete Test Method A Section 3
	6) Voltage drop between Generator and load, due to I^2R losses in the cable. This will be worse during current surges (motor starting etc).	Check the voltage at both ends of the cable run at full load. Differences in voltage indicates a volts drop along the cable. In severe cases, a larger diameter cable is required.

SECTION 5
SEPARATELY EXCITED CONTROL SYSTEM WITH PERMANENT MAGNET GENERATOR (PMG)

The Permanent Magnet Generator (PMG)

The PMG rotor shaft is located onto the non-drive end of the Generator shaft. A spigot fits over the shaft end, and the whole assembly is secured by a single bolt through the PMG rotor, into a threaded hole in the shaft .
The PMG stator is fitted to the non-drive end bracket of the Generator, either directly into a spigot on the non-drive end bracket, or bearing cap, or into a housing as shown below.

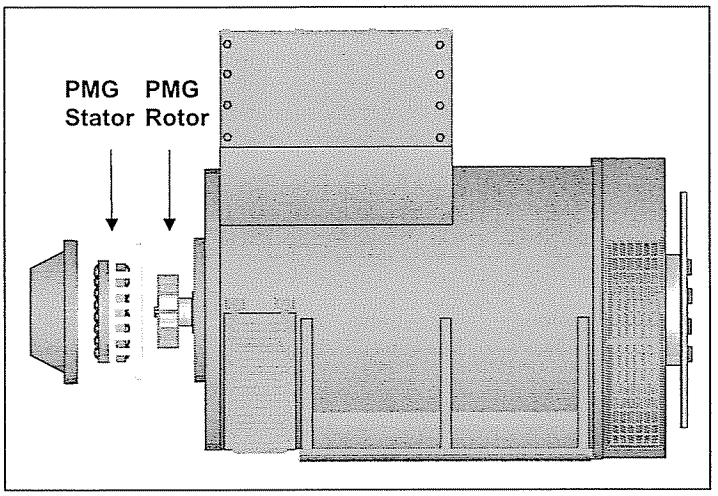

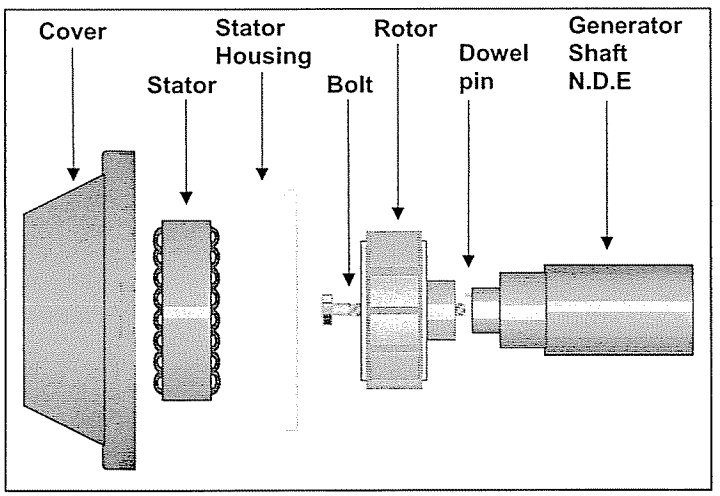

PMG powered AVR's (Series 3)
The PMG provides an independent power supply for the Automatic Voltage Regulator (AVR).
Series 3 (PMG Excited), AVR types are designated 'MX' or 'MA', to identify them as PMG powered AVR's.
Series 4 (Self-Excited), AVR types are designated 'SX' or 'SA', and are unsuitable for use with a PMG power supply.

Testing the Permanent Magnet Generator

The PMG can be tested as an independent Generator.
Disconnect the AVR power supply leads marked P2, P3, P4, from the AVR terminals.
Run the Generator at nominal speed (the speed must be correct for accuracy of results).
Check the PMG output Voltage across leads P2, P3, and P4 with a multimeter, set to AC volts.
For 50 Hz Generators, Voltage across P2, P3 and P4 should be approximately 170VAC.
For 60Hz Generators, Voltage should be approximately 200VAC.

PMG's manufactured before 1983.

The PMG stator has a lead marked P1, which is the Neutral connection. The Voltage from P1, (Neutral), to P2, P3, and P4 should be /1.732 of the phase to phase voltage.
Note: This lead is not required for later AVR types, and can be removed if the original AVR is replaced.

Series 3 AVR's manufactured before 1989

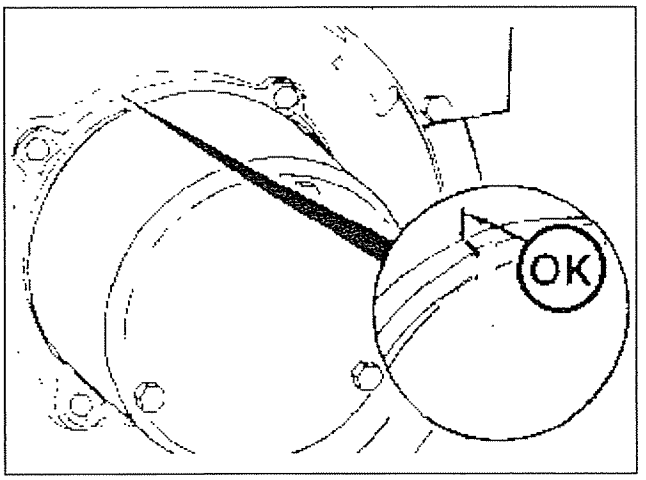

The radial position of the PMG Stator was important for adjustment of the AVR response and regulation.
For Pre-1989 Generators, the PMG stator is fitted into a housing, which is clamped to the Generator non-drive end bracket.
Release of the clamps allows the PMG stator housing to be rotated in its spigot.
The correct radial position of this housing is marked at the top, (12 O'clock position), on the housing and end bracket.
When work is carried out which requires the dismantling of the PMG, care should be taken during re-assembly, to ensure that the PMG stator is returned to its original radial position.
NOTE: Series 3 AVR's manufactured after 1989
If the original pre-1989 AVR is changed for a later model, the radial position of the PMG Stator is not important.

SECTION 5

SEPARATELY EXCITED CONTROL SYSTEM
WITH PERMANENT MAGNET GENERATOR (PMG)
TEST METHOD B
FAULT SYMPTOMS AND REMEDIES AT NO LOAD

SYMPTOM	POSSIBLE CAUSE	TEST AND REMEDIES
NO VOLTAGE (NO LOAD)	1) Faulty permanent magnet generator (PMG), stator or rotor.	Disconnect the PMG leads from AVR terminals P2, P3, P4. Check voltage across leads with a Multimeter, with the set running at correct speed. For 50Hz, Voltage across P2, P3 and P4 should be approx. 170VAC. For 60Hz, Voltage is approx. 200VAC. Pre 1983 machines. Lead P1 from the PMG is the Neutral. Voltage P1 to P2, P3, & P4 should be /1.732 of phase to phase voltage.
	2) Insulation failure to earth, (ground), on permanent magnet stator.	Disconnect leads P2, P3, P4 and, 'Megger' test to earth, (see Section 2).
	3) Voltmeter faulty.	Check and verify voltage at Generator output terminals with a Multimeter.
	4) Loose, broken or corroded connections.	Check connections, repair and replace where necessary.
	5) AVR High excitation protection circuit activated, collapsing output voltage. (AVR protection circuit is factory set to trip at 70VDC across AVR output).	Check if AVR LED is LIT, indicating protection circuit activated. Shut down the engine, and run up again. If the voltage builds up normally but collapses again, the protection circuit has operated, & AVR LED will be lit. Run again & check the excitation voltage across A.V.R X+ (F1) and XX- (F2). If greater than 70 VDC, the protection circuit is operating correctly. Carry out Test Method A, Section 3, to establish cause of high excitation volts.
	6) Main Rectifier diodes short circuit.	Check diodes (see Section 2). Carry out Test Method A Section 3.
	7) Open circuit in exciter stator windings.	Remove external leads from Generator, and carry out all tests as per Test Method A, Section 3.
	8) Faulty AVR .	Replace AVR and re-test..
	9) Winding fault, open circuit or short circuit.	Remove external leads from Generator, and carry out all tests as per Test Method A, Section 3.

SYMPTOM	POSSIBLE CAUSE	TEST AND REMEDIES
LOW VOLTAGE (NO LOAD)	1) Engine speed low	Check LED on AVR. If lit, UFRO protection is activated, indicating low engine speed. Adjust engine speed to correct nominal.
	2) Under frequency protection (UFRO) circuit operational.	Check if LED on AVR is lit, indicating low engine speed. Adjust engine speed to within –1% to +4% of nominal.
	3) Voltmeter faulty or 'sticking'.	Verify voltage across Generator output terminals with a Multimeter
	4) AVR 'VOLTS' adjust incorrectly set	Adjust control CLOCKWISE to increase voltage. If remote hand trimmer fitted, adjust in conjunction with trimmer.
	5) Faulty AVR	Replace AVR and re-test.
HIGH VOLTAGE (NO LOAD)	1) AVR 'VOLTS' adjust or remote trimmer incorrectly set.	Check and adjust as necessary.
	2) Low sensing supply from main stator.	Check sensing supply as per Test method A Section 3, paragraph 13.
	3) Sensing supply open circuit to AVR terminals 2 and 3, (AVR MX341), or 6, 7 & 8, (MX321, and all MA type).	Open circuit or low sensing signal will cause the AVR to produce high excitation, which will produce a high output Voltage. Check sensing supply as per Test method A, Section 3, paragraph 13.
	4) Burden resistor open circuit. (Pre 1989 machines only).	Disconnect burden resistor, (fitted in terminal box), and check resistance (215 ohms). Also check tapping bands and connections for corrosion and tightness.
	5) Faulty AVR.	Replace AVR and retest machine
UNSTABLE VOLTAGE (NO LOAD)	1) Engine speed 'hunting' (unstable).	Check with a frequency meter or tachometer for speed variations due to governor 'hunting', or cyclic irregularities in the engine. This may improve as load is applied.
	2) Permanent magnet stator incorrectly positioned. (Pre 1989 AVR only).	The radial position of the stator housing is important for the stability and response of the AVR. (See start of Section 5 for details). Later AVR models do not require this adjustment.
	3) AVR stability control incorrectly adjusted.	Adjust stability clockwise until voltage stabilises. Check again on load.
	4) Loose or corroded connections.	Check push on terminals on AVR Check auxiliary terminals for loose connections. Repair or replace as necessary.
	5) Intermittent earth on machine.	Megger all windings, (see section 2), including Exciter Stator, low insulation resistance can effect the AVR.
UNBALANCED VOLTAGE (NO LOAD)	1) Fault in main stator winding.	Disconnect all external leads to Generator and re-test. Separately excite Generator, (Test Method A Section 3). A winding short will get hot, and engine will sound slightly loaded. Shut down set and check by hand for hot spots.

FAULT SYMPTOMS AND REMEDIES WHEN ON LOAD

SYMPTOM	POSSIBLE CAUSE	TEST AND REMEDIES
UNBALANCED VOLTAGE (ON LOAD)	1) Single-phase load current unevenly distributed over the three phases.	Check the current in each phase with clip-on ammeter. The full load rated current must not be exceeded on any one (single) phase. Re-distribute load if necessary.
UNSTABLE VOLTAGE (ON LOAD)	1) Engine governing unstable (hunting)	Check with frequency meter or tachometer for engine governor 'hunting', or cyclic irregularities in the engine.
	2) Leading power factor load created by power factor correction capacitors.	Isolate the power factor correction capacitors until sufficient motor load has been applied to counteract the leading power factor. (See Power Factors Section 2.)
	3) Permanent magnet stator positioned incorrectly (Pre 1989 AVR's only).	The radial position of the stator housing is important for the stability and response of the AVR. Later AVR models do not require this adjustment. (see start of this section for details.
	4) Non linear loads, causing interaction between dynamic closed loop control systems.	Interaction of closed loop systems controlling the load, the generator, and the engine. Instability caused by oversensitive control settings. Adjust AVR to high gain, (stability), and load drives to low gain. Increase engine speed 'droop' to reduce sensitivity. Contact factory for further advice regarding non-linear loads.
	5) Fluctuations in load current, (motor starting, or reciprocating loads).	Check the load current on a stable supply, i.e. mains, or separately excite the machine. A variable D.C. supply is required for on load separate excitation tests. (see test method A, section 2).
	6) AVR stability control incorrectly adjusted.	Adjust AVR control, until voltage is stable
POOR VOLTAGE REGULATION (ON LOAD)	1) Large speed droop on engine. AVR UFRO protection activated.	Check that the speed droop from no load to full load is no greater than 4%. Check AVR LED. If LIT, increase engine speed.
	2) Parallel droop circuit incorrectly adjusted, or requires shorting switch for single running.	The droop circuit will give additional voltage droop of -2½ % at full load 0.8 pf. For single running machines this can be improved by fitting a shorting switch across the droop CT input, (S1 – S2), on the AVR. Pre 1989 machines. Short across the burden resistor in the terminal box. (See section 6 parallel operation).
	3) Unbalance load.	Check voltage and load current on all phases. If unbalanced, redistribute the load more evenly across the phases.
	4) AVR stability adjustment incorrectly set.	Adjust 'stability' anticlockwise until voltage becomes unstable. Adjust slightly clockwise until voltage stabilises.

SYMPTOM	POSSIBLE CAUSE	TEST AND REMEDIES
POOR VOLTAGE REGULATION cont. (ON LOAD)	5) Voltage drop between Generator and load, caused by losses in supply cable, (I^2R losses).	Check the voltage at both ends of the cable run at full load. Large differences in voltages indicate a large volts drop along the cable. A larger diameter cable is required in severe cases.
	6) Fault on main rectifier or excitation winding.	Check the no load excitation voltage across AVR X+ (F1) and XX- (F2). If higher than 12 volts D.C. the machine must be tested as per Section 3 Test Method A.
	7) Under frequency protection (UFRO) activated.	Check LED on AVR. If lit, UFRO is activated. (engine speed is too low). Check speed and adjust to nominal.
	8) Permanent Magnet stator position incorrect. (Pre 1989 AVR' s only).	The radial position of the stator housing is important for the regulation, and response of the AVR. (see start of section 5 for details).
POOR RESPONSE TO LOAD SURGES OR MOTOR STARTING	1) Engine governor sticking or slow to respond. AVR 'UFRO' protection circuits activated.	Check performance of engine during application of load. Check if AVR LED is lit during motor starting. Check if AVR 'DIP' or 'DWELL' circuits are activated. Adjust or de-activate, (See AVR instruction sheets).
	2) Parallel droop circuit incorrectly set.	Too much droop will increase voltage dips when motor starting. Fit shorting switch for single running Generators. Adjust droop, (See Parallel section 6) if necessary.
	3) Load current surges exceed 2.5 times full load of the machine.	Check surges with clip-on ammeter. Check with Newage for advice on voltage dips for motor starting.
	4) UFRO protection on AVR operational.	Check engine speed DIP on load application. Check LED on AVR. Low engine speed will activate UFRO protection circuit. (LED ON).
	5) Voltage drop between Generator and load, caused by I^2R losses in supply cable. This will be worse during current surges, (motor starting etc).	Check the voltage at both ends of the cable run at full load. Differences in voltages indicate a Volts drop along the cable. A larger diameter cable may be required in severe cases.
	6) Incorrect position of permanent magnet stator (Pre 1989 type A.V.R.'s only).	The position of the PM Stator affects the response performance of the AVR See following text for details.
	7) Motor contactors dropping out due to voltage dip on starting.	All symptoms and Remedies in this section may apply to this problem. Refer to factory for voltage dip calculations.
	8) AVR 'Stability' controls incorrectly set.	For best performance, adjust 'Stability' control anticlockwise until voltage is unstable, then slightly clockwise, until stable.
	9) Fault on windings or rotating rectifier.	Check the no load excitation voltage across AVR X+ (F1) and XX- (F2). If much higher than 12 volts D.C. the machine must be tested as per Section 3 Test Method A.
	10) Engine relief circuits in AVR activated.	Check if AVR has "DIP" or "DWELL" circuits. Adjust or turn out control if affecting load response.
	11) Fault in AVR.	Replace and test on load.

SYMPTOM	POSSIBLE CAUSE	TEST AND REMEDIES
VOLTAGE COLLAPSES (ON LOAD)	1) Protection circuit in AVR activated, due to high excitation condition across AVR output, (X+ (F1) and XX- (F2).	Excitation volts higher than 70V D.C. Check across X+ (F1) and XX- (F2) on load. Ensure engine speed is correct at full load. Check output voltage, ensure it does not exceed the rated voltage. Check load current for overload.
	2) Protection circuit in AVR operated, due to fault in Generator windings or diodes.	Check AVR LED, if lit, protection circuit is activated. Shut down engine, and re-start. If voltage returns as normal, but collapses again on load, protection circuit is activated, due to high excitation. Carry out tests as per Test Method A Section 3, to identify cause of high excitation volts.
	3) Malfunction of protection circuit in AVR.	Replace AVR and test on load.
	4) Severe overload or short circuit on across phases.	Check load current with clip-on ammeter.
HIGH VOLTAGE (ON LOAD)	1) Unbalanced load.	Check voltage on all three phases. If unbalanced, re-distribute loading over the three phases.
	2) Leading Power Factor Load.	Check for capacitive (leading) PF load, i.e. kVAr correction, fluorescent lights. Apply motor (lagging) PF load, or switch off capacitors. A leading power factor load will give abnormally low D.C. excitation volts across X+ (F1) and XX- (F2).
	3) Parallel droop transformer reversed, (when fitted).	Check for reversal of droop CT, P1 - P2 or S1 - S2, reverse either to correct. See section 6 for more details.
LOW VOLTAGE (ON LOAD)	7) Engine speed droop greater than 4%.	Check if AVR LED is lit, UFRO is activated, (low speed indication).Check engine speed no load and full load. Engine governing should be within + 4% and –1% of nominal speed. Reset as necessary.
	8) Under frequency protection circuit operational (UFRO).	Check AVR LED. If lit, UFRO is activated, increase engine speed to correct levels.
	9) Faulty permanent magnet generator (PMG) stator or rotor.	Disconnect the PMG leads from AVR terminals P2, P3, P4. Check voltage across leads with a Multimeter, with the set running at correct speed. For 50Hz, Voltage across P2, P3 and P4 should be approx. 170VAC. For 60Hz, Voltage is approx. 200VAC.
	10) AVR faulty.	Replace AVR and re-test.
	11) Fault on winding or rotating diodes.	Any fault in this area will appear as high excitation voltage across X+ (F1) and XX- (F2). If higher than figures listed in Section 3. Carry out Test Method A Section 3.
	12) Voltage drop between Generator and load, due to I^2R losses in the cable. This will be worse during current surges (motor starting etc).	Check the voltage at both ends of the cable run at full load. Differences in voltage indicates a volts drop along the cable. In severe cases, a larger diameter cable is required.

SECTION 6
PARALLEL OPERATION OF A C GENERATORS

It is essential that all instruments be regularly checked for safety, and any connection leads, probes or clips checked to ensure that they are suitable for the voltage levels being tested.

Danger !

Never attempt to test a "LIVE" generator unless there is another competent person present who can switch off the power supply or shut down the engine in an emergency.

Never expose "LIVE" connections unless you have created a safe working area around you. Make sure you have made all other persons in the immediate area fully aware of what you are doing.

1. Introduction and theory

This section will explain the reasons for paralleling, the method by which it is carried out, the setting up procedures and possible problems that may arise.

Parallel Operation may be necessary for the following reasons:-

(1) To increase the capacity of an existing system.
(2) Size and weight may preclude the use of one large unit.
(3) Allows non-interruption of the supply when servicing is required.

In order to parallel AC Generators satisfactorily, certain basic conditions have to be met. These are as follows:-

(1) All systems must have the same voltage.
(2) All systems must have the same phase rotation.
(3) All systems must have the same frequency.
(4) All systems must have the same angular phase relationship.
(5) Systems must share the load with respect to their ratings.

Metering and Protection
A minimum amount of instrumentation is required to ensure the above information is satisfactorily monitored, comprising an ammeter, a wattmeter and a reverse power relay. No voltmeter is specified for each system because it is preferred to use one voltmeter on the distribution or synchronising panel with a selector switch for each system. This eliminates any possible meter inaccuracies.

A reverse power relay is essential as any engine shut down, from low oil pressure or temperature etc. will result in other systems motoring the failed set, with consequent overload to the remaining systems, and/or damage to the motored engine.

Only one frequency meter is required with the facility of being switched to the busbar, or the incoming system.

Synchronising
A synchroscope and/or lights, is required to detect the angular phase displacement. If lights are used three different connections are possible. For paralleling with the lights dim, they must be connected across like phases or like lines (single phase), i.e. UU, V-V or L1-L1. For paralleling with lights bright they should be connected across unlike phases, i.e. U-V etc.

If a three-lamp system is used with the lamps connected across U-W, V-V and W-U the lamps will 'rotate' and give an indication which machine is running fast. Synchronism is reached with two lamps bright and one dark and in some respects this connection gives a closer visual indication of the point of synchronism. Note the lamps should be rated for at least twice the machine voltage or it will be necessary to connect two or three in series. A more preferred method is a resistor, in series with each lamp.
The following diagrams illustrate the connections:

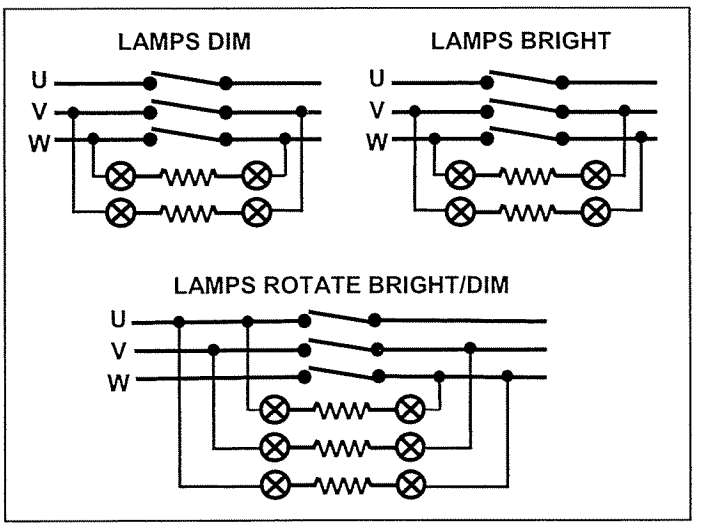

NOTE: If the neutral is solidly linked, then only one set of lamp/resistors is required, because the return path is through the neutral link. This, of course, only applies to the lamps dim or lamps bright connection, and not on the three lamp connection.
Modern installations prefer to use semi or fully automatic synchronising equipment, which allows breaker closure only when conditions are correct.

Load sharing

An important aspect of parallel operation is load sharing. The total load, comprising a kW or active component and a kVAR or reactive component, must be shared by the systems with respect to their normal ratings.

The kW component is adjusted by purely mechanical means and requires relatively fine speed control of the prime mover (engine). It is advisable to fit a limited range governor to avoid large adjustments of speed when in parallel.

The kVAr component is a function of the AC generator excitation. When machines are in parallel, the magnitude of the field excitation will not directly influence the output voltage, (depending upon the relative size of the Generator to the bus-bar system) it does however, adjust the internal power factor at which a particular machine operates. For instance, an over-excited AC generator will produce a lagging pf current from that Generator. If a difference in excitation exists, then circulating currents will flow, limited only by the internal machine reactance. This current will appear as a zero p.f. leading or lagging current, depending on the machine excitation, and will either subtract or add to the total current that each machine supplies. Reactive current, either leading or lagging, is by virtue of the 90-degree phase displacement, quite commonly described as being quadrature.

The Generators must therefore be provided with equipment to sense this reactive current, and limit it to an acceptable level. Hence the quadrature droop Current Transformer, which is connected to the AVR sensing terminals S1-S2.
Note: For correct operation, it is essential that the droop CT primary conductor is Fitted into the correct phase, (usually 'W' for 3 phase Generators), and in the correct polarity.
The secondary output leads S1 –S2, must also be connected in the correct polarity.
(Pre 1989 machines). The droop CT is connected in parallel with a burden resistor or choke, external to the AVR, and in series with the AVR sensing supply.

2. General notes on setting up procedure

Stable parallel operation and accurate load sharing between no load and full load can only be obtained when the initial voltage settings and droop kits are correctly set up. It is also most important the engine governor characteristics are similar otherwise incorrect kW load sharing can result when either increasing or reducing load.

To check the no load voltage settings, run each machine singly at the normal no load frequency, i.e. 52Hz for 50Hz operation or 62Hz for 60Hz operation. The rated voltages should now be set to within ½% of each other. Remote hand trimmers can be fitted to the control panel for this purpose.

Quadrature droop equipment

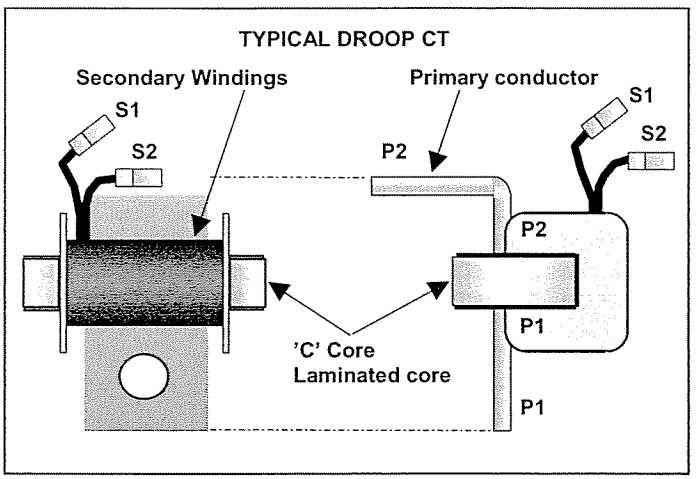

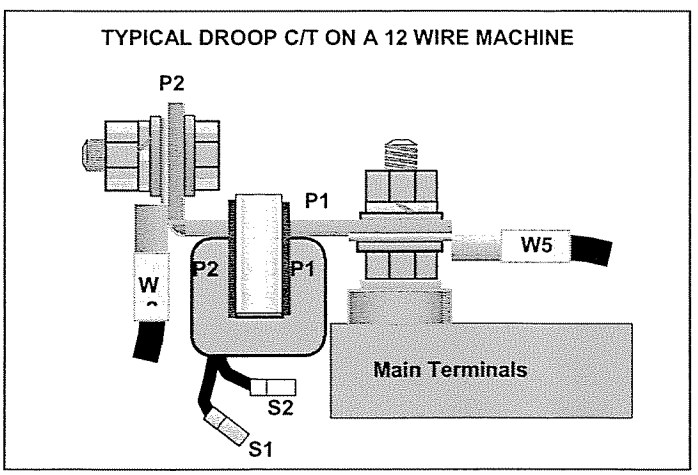

The most important aspect of initial setting up procedure concerns the droop circuit. Most of the troubles allied to poor parallel operation originate from the droop circuit. They are either incorrectly adjusted for the level of voltage droop, or are incorrectly connected, such that a rising voltage characteristic is obtained.
If a machine is specified for parallel operation at the time of ordering, then the droop kit supplied will have been set up on test. Provided that the terminal markings and connections are followed, no problem should result.
Caution! Reversal of the transformer or reversal of the secondary connections to the transformer will result in a rising voltage characteristic, which is completely unstable during parallel operation. In this condition very high circulating current will be produced by the generators.

Where machines have to be modified to incorporate a droop CT at a later date, ensuring a drooping voltage characteristic appears to be of the greatest difficulty. As previously stated, the droop is correctly adjusted when the terminal voltage droops 5% with zero pf, or 3% when the generator is at full load 0.8 PF.

Testing the parallel droop circuit for reversal

1. Adjust the AVR droop control to put the maximum amount of droop in circuit. (Pre 1989 machines), Move the tapping band on the burden resistor to its maximum position across the droop CT.
2. Run the machine singly at full rated speed, and apply as much inductive load (i.e. motors transformers etc.) as can be obtained.
3. Make a note of the output voltage from the machine terminals.
4. With a switch, short circuit parallel droop transformer, terminals (S1-S2), (or turn the "DROOP" adjustment on the AVR to minimum), and observe the output voltage from the machine.
5. If the voltage RISES slightly, this indicates that the droop circuit is functioning correctly, and polarity is correct.
6. If the voltage has dropped slightly, the droop transformer is reversed, and the connections of its two output leads S1 - S2 should be changed over.
7. After completion of this test, adjust the droop setting to required level.

Setting the droop circuit

The parallel droop CT is connected directly across the AVR terminals S1-S2. Droop adjustment is achieved on the AVR "DROOP" trimmer. Normal setting will be between 25% clockwise, to fully clockwise, depending upon the AVR type, and the level of droop required.
Correct droop adjustment will produce a 3% voltage drop at full load, 0.8 power factor, (as a single running Generator).
Note1: Droop is non-effective at power factor 1, (unity), therefore a power factor of 0.8 is important for correct adjustment.
Note 2: The test load can be reduced pro rata, i.e., at 50% full load 0.8 pf, Voltage droop setting would be 1.5%.
Note 3: Excessive Droop will produce poor voltage regulation from no load to full load at 0.8 pf, and will also produce larger voltage dips during motor starting. The droop should be adjusted to give satisfactory load sharing performance in parallel, without compromising voltage regulation and motor starting performance.

Checking the Droop Current Transformer output

Should problems occur with a), insufficient droop, or b), too much droop, the droop CT output should be checked.
With the droop CT connected to the AVR terminals S1-S2, apply 50% load, (any power factor), to the Generator, and check the output voltage across terminals S1–S2.
At 50% load, the output should be between 0.5 and 2.5 VAC. Voltage reading higher or lower than this indicate

that the CT current rating is incorrect for the Generator current rating.
Note: The droop trimmer setting will not affect this test.

Generators manufactured before 1989

Droop is adjusted on a burden resistor, mounted in the Generator terminal box, and can be checked across the resistor terminals.
If the voltage droop is too great on load, less resistance is required across the droop CT, on the burden resistor. Conversely, a larger droop requires more resistance. A value of between 30 and 50 ohms will give satisfactory performance.

Step by step setting up procedure for parallel operation

The following is intended as a general guide only. If any doubt exists as to the reason for various tests, further reference should be made to the preceding notes. All machines must obviously be correctly wired in accordance with the appropriate connection and wiring diagrams.

(a) Run No.1 generator on no load at rated speed. Check AC voltage and adjust where necessary.

(b) Check phase rotation of No. 1 generator.

(c) Run No. 2 generator and proceed as items a and b, voltages must be within 0.5% of No.1 generator.

(d) With Nos. 1 and 2 generators running on no load, switch in synchroscope or lights.

(e) Adjust speed until synchroscope rotates very slowly or lights slowly brighten and dim.

(f) Check finally that voltages are equal or within 0.5% of each other. Adjust as required.

(g) Close breaker at synchronism; observe ammeters for circulating current, if in excess of 5%, recheck no load voltage settings and droop circuits for polarity, (reversal of CT terminals S1-S2).

(h) Increase load until full load appears on each generator when in parallel. Some adjustment to one engine governor may be required to ensure balanced kW meter readings.

(i) Check the ammeter readings with the kW meters equal. They should be within 5% of each other.

(j) If the ammeter readings are outside 5%, first check that the meters are all accurate. The machine with the highest current is over-excited, and therefore requires more droop to compensate. Increase the droop setting.

(k) With full load on each generator reduce the load in 20% increments. At each loading, observe kW meter and ammeter readings down to 20% full load. Any variation of either instrument beyond 5% of each other requires correction.

(l) Unequal kW sharing implies a faulty prime mover, most likely the governor. Adjust kW sharing on the engine governors, and when equal, check the ammeter readings.

(m) Unequal ammeter readings at the full load end of the range imply incorrect levels of droop.

(n) Unequal ammeter readings approaching the no load condition imply incorrect voltage settings.

The most likely procedure that occurs in practice concerns the paralleling of additional machines to already loaded sets. For instance, if a set is supplying a load equal to 75% of its output and further load is anticipated, the engineer may decide to spread this load over two sets. A procedure somewhat on the lines of the following is required: -
The incoming set is started and run at no load frequency. The synchroscope / lights switch is closed, connecting the incoming machine and the busbar via the synchroscope or lights. As the incoming machine is fast, the synchroscope will rotate in the fast direction, or the lights will brighten and dim at the rate dependent of the frequency difference.

The speed of the incoming machine should be reduced by actuating the motorised governor in the slow direction.

When the frequencies are nearly equal, the speed of rotation of the synchroscope or the changes in brilliance of the lights will be slow enough to enable the set contactor to be closed when the voltages are in synchronism. This will be at twelve o'clock position on the synchroscope, or with lights bright or dim dependent on which connection is used.

Note: When synchronising the incoming generator with loaded generators, the loaded generator(s), can have a voltage level up to 4% lower than the in-coming generator. This is normal, and is due to the effect of droop, and AVR regulation. Do not adjust the voltage after the initial no-load setting. This Voltage difference is essential, in order that the incoming Generator starts to take a proportion of the reactive (kVAr), load current on breaker closure.

Load Sharing

In order that the incoming machine may now take its share of the load, the governor control should be held in the speed raise position, until the desired load is indicated by the kW meter and ammeter. Conversely, if too much load is applied holding the governor control in the speed lower position can reduce it. It is most important that the total load be shared in respect of their normal ratings and the meter readings should be compared with the name plate data. In any event, unequal load sharing requires correction to avoid mechanical problems which occur when diesel engines are run light for any considerable time.

It is important to differentiate between unbalanced loading caused simply by the operator failing to spread the load equally over the two sets, and by circulating currents unbalancing the ammeter readings.
For example: consider 2 X 100kVA generators in parallel, with no circulating currents, supplying a load of 150 kVA, at 0.8 p.f.

With the load distributed equally, meter readings would appear as follows:

Machine	VOLTS	AMP	kW	kVA	p.f.
No. 1	415	104	60	75	0.8 lag
No. 2	415	104	60	75	0.8 lag

If the load were distributed unequally, again no circulating currents, the following figures could appear:

Machine	VOLTS	AMP	kW	kVA	p.f.
No. 1	415	139	80	100	0.8 lag
No. 2	415	69	40	50	0.8 lag

If now the same unequally distributed load is being supplied, but circulating currents are present, meter readings something on the lines of the following would be observed.

Machine	VOLTS	AMP	kW	kVA	p.f.
No. 1	415	185	80	133	0.6 lag
No. 2	415	60	40	43	0.93 lead

Machine No. 1 is now supplying 133 kVA at 0.6 pf, considerably in excess of its normal rating. Continued operation under this loading would cause the AVR overload protection circuit to trip, or the main stator and the rotor to fail. Machine No. 2 is operating under-excited, that is, operating with a leading power factor, and at much reduced kVA.

This will not damage No. 2 generator, but it is evident that No. 1 generator is very heavily over-loaded. A leading power factor condition is particularly difficult to detect unless individual power factor meters are fitted. The normal instrumentation of ammeter, voltmeter and kW meter cannot indicate this load condition.

Excitation levels

As a guide to load sharing for similar generators, the D.C. excitation volts should be approximately equal when the generators are correctly sharing reactive and active current. This can be checked across the AVR terminal X+ (F1) and XX- (F2). The Generator with the highest excitation is more lagging, the lowest excitation Generator will more leading power factor.

3. Difficulties

Some paralleling problems, which can occur, are detailed below. Probable causes are also shown.

(a) Oscillating kW meter, ammeter and voltmeter.

Cause: Engine governing. Replace by known serviceable unit. This may also be caused by electronic governors with insufficient speed droop (less than 2%).

(b) Unbalanced ammeter readings. kW meters balanced and stable.

Cause: Circulating current through incorrect voltage settings, droop CT connections reversed or insufficient droop.

(c) Unbalanced ammeter readings on no load or rapidly rising currents as soon as contactor is closed.

Cause: Incorrect voltage settings or droop CT connections reversed.

(d) Unbalanced kW and ammeter readings as load increased or decreased.

Cause: Dissimilar governor speed regulation, or very tight governor control (electronic). If governor is set at less than 2% speed regulation, kW load sharing will be poor.

(e) Unbalanced ammeter readings as load increased. KW meters balanced.

Cause: Droop circuit setting not identical, or one droop kit reversed, or droop CT not in circuit.

Apart from the above problems, certain peculiarities may exist which are in no way detrimental to the operation of the sets. They may, however, confuse the operator into thinking a fault exists.

The most common query results from voltage oscillation during the initial paralleling procedure.

When an additional set is being connected to the busbars with the synchroscope / lights switch in the on position, a point may be reached where the incoming machine voltage starts to fluctuate. This only occurs when the frequency difference is at its greatest. As the frequencies approach each other, no further instability is noticed. This is not, however, a function of the stability circuit within the AVR, but relates to 'pickup' problems associated with the switchboard wiring.

4. Neutral interconnection

It should be noted that paralleling of all system neutrals can under certain circumstances lead to over heating or possible stator burnout's.
This is particularly evident when machines of dissimilar manufacture are paralleled. Differences in generated waveshape may cause large harmonic circulating currents through the neutrals.

The neutrals of dissimilar machines must, therefore, never be connected. On the other hand, neutrals of like machines may be connected.

5. Paralleling with the public supply

The Mains (Utility), Voltage can vary by as much as ± 10%, (or more in some regions). The droop equipment alone would be unable to maintain control of the resultant reactive currents.
It is therefore recommended that a Power Factor Controller (PFC3) be used, when paralleling with the Mains (Utility).
This enables the Generator to maintain a constant power factor, when the Mains (Utility), Voltage is stepped up or down by the authorities.
The Power Factor Controller (PFC3), can also be supplied with voltage matching facility, which allows the generator voltage to be adjusted automatically to match the public supply, thus reducing any switching transients on closure of the circuit breaker.
Parallel Droop is still required, working in conjunction with the PFC3, to control rapid current surges, and 'soften' the effects of sudden mains voltage stepping.
Droop is also required to control circulating currents when the Generators are required ton run in 'Island mode', (as mains failure or emergency supply), during which time the PFC3 must be switched off.

PARALLEL OPERATION FAULT FINDING CHART

SYMPTOM	POSSIBLE CAUSE	TEST AND REMEDIES
CIRCUIT BREAKER WILL NOT CLOSE WHEN ATTEMPTING TO PARALLEL MACHINES.	a) Circuit breaker fitted with 'Check Synchronising' protection, which prevents out of phase paralleling).	a) Ensure that the synchroscope is indicating that machines are IN PHASE, or close to the eleven o'clock position, (when rotating in a clockwise direction). Ensure that the speed difference between the incoming set and the bus bar is small enough to prevent rapid rotation of the synchroscope, (or rapid fluctuations of the lights), before closing circuit breaker.
	b) Phase rotation of one machine is different to the other.	b) Check the phase rotation of each individual Generator. NO ATTEMPT TO PARALLEL must be made until the phase rotations are all identical. Reverse two phases on the Generator, which has a different rotation.
	c) Voltage difference too high between the incoming Generator and the Bus bar.	c) The voltage on the incoming set can be up to 4% higher than the bus bar Voltage. THIS IS NORMAL. Do not adjust original no-load Voltage settings. If difference is greater than 4%, check for excessive droop on the loaded Generator(s).
DIFFICULTY IN MAINTAINING A STABLE IN-PHASE CONDITION, PRIOR TO SYNCHRONISING.	a) Governor drift on one or more of the engines.	a) Let engines stabilise (warm up) before paralleling. If speed is still drifting check governors and engine condition.
	b) Load variation on the bus-bar causing speed/ frequency changes at the time of synchronising.	b) Disconnect any rapidly varying load. Check that there is no likelihood of a motor or automatic load starting when synchronisation is attempted. DO NOT attempt to parallel if the load current is highly unstable.
FREQUENCY (Hz), UNSTABLE WHEN ON LOAD IN PARALLEL.	Engine speed droop too 'tight' or cyclic irregularities (instability), between the engines. (Check kW meters for rapid shifting of kW power between sets).	Increase the engine governor speed droop, to 4% droop, (no load to full load). Check for "sticky" governors on a new engine. Check engines for cyclic problems, (firing, out of balance, etc),
VOLTAGE FLUCTUATES DURING SYNCRONISATION, (STABLE BEFORE AND AFTER)..	This symptom usually results from line pick-up between the Generators, through the synchronising panel and/or protection circuits, (earth leakage etc), that can form a temporary 'closed loop' link between the Generators during synchronisation.	The fluctuation will decay when the Generators approach synchronism, (almost identical speeds), and will disappear completely when the circuit breaker is closed. The synchronising equipment, earth leakage protection, and/or wiring circuits, in the switchboard can produce pickup problems.
CURRENT RISES RAPIDLY WITHOUT CONTROL AS INCOMING CIRCUIT BREAKER IS CLOSED.	Parallel droop equipment reversed on one of the Generators.	Check the droop CT's for reversal. (See previous text in this section). Reverse lead S1-S2 on the droop CT. Check excitation volts, the Generator with reversal will have highest excitation volts.

SYMPTOM	POSSIBLE CAUSE	TEST AND REMEDIES
CIRCULATING CURRENT ON BOTH GENERATORS AT NO LOAD, (CURRENT IS STABLE).	a) Voltage difference (excitation level) between the Generators.	a) Check Voltages at NO LOAD, (identical frequencies), and ensure all Generators have identical voltages at no load. Do not adjust when load sharing.
	b) Parallel droop equipment reversed on BOTH Generators. (Unlike ONE droop reversal, which is a highly UNSTABLE condition).	b) Check ALL droop CT's for reversal, as suggested in previous test.
	c) Incorrect setting of parallel droop equipment.	c) Check settings of droop trimmers. Check droop CT's are in correct phase. Check CT output to AVR S1-S2 is correct. (See previous text).
KILOWATT METERS SHOWING UNBALANCED READINGS.	Engines not sharing the power (kW) equally.	Adjust the Governors of one engines to equalise the kilowatt sharing.
AMMETERS SHOWING UNBALANCED READINGS AFTER ADJUSTMENT OF THE KILOWATT METERS.	a) Voltage difference (excitation levels) between the machines.	a) Test the machines individually for exact voltage at NO-LOAD.
	b) Parallel droop equipment incorrectly adjusted.	b) Adjust as stated in previous text.
	c) Improved regulation equipment affecting the load sharing. (Pre 1989 machines only.)	c) Short out the improved regulation equipment and test again. Re-adjust if this is causing the problem. Remove improved reg. equipment if AVR's are changed to a later model.
KILOWATT READINGS BECOMING UNBALANCED AS LOAD IS INCREASED OR DECREASED.	Engine governors are incompatible, or new governors 'sticking, giving unequal kW sharing over load variations.	The engine governors must be adjusted to give similar NO-LOAD/FULL LOAD characteristics. Check for 'sticky' governors on new or repainted engines. Electronic governors should be set with a minimum 2% speed droop to ensure satisfactory kilowatt load sharing. If tighter speed regulation is required, an isocronous kW load sharing system should be installed.
AMMETER READINGS BECOME MORE UNBALANCED AS LOAD IS INCREASED.	a) Difference in Parallel droop level settings.	Run Generators SINGLY, and apply load at approximately 25%, 50% & 100%. Take Voltage readings at each level and compare them with the other Generators. Adjust control systems to remove regulation differences. Repeat the above with as much inductive load as possible i.e. motors, transformers etc. Adjust the parallel droop trimmers, to achieve equal inductive load sharing.
	b) Difference in no load to full load voltage regulation of AVR's.	
	These settings are the major contributing factors to the load/voltage characteristics of the machine, and therefore must be set to give equal characteristics to the machines with which it is paralleled.	
VOLTAGE REGULATION POOR AS A SINGLE RUNNING MACHINE.	Excess amount of parallel droop in circuit.	For normal voltage regulation as a single running machine, a shorting switch should be fitted across the parallel droop transformer. (S!-S2). This should be clearly marked 'Single' 'Parallel' operation. (See previous text).
kW METERS UNSTABLE, ENGINES 'ROCKING' ON THEIR MOUNTS.	Electronic engine governor speed 'droop' characteristics set too tight.	At least 2% engine droop is essential for kW (Active current) sharing. If 1% or less speed regulation is required, isocronous governing and kW load sharing system.

STAMFORD
power generation

STAMFORD POWER GENERATION WORLDWIDE

1	**AUSTRALIA**	NEWAGE ENGINEERS PTY. LIMITED PO Box 6027, Baulkham Hills Business Centre, Baulkham Hills NSW 2153 Tel: (61) 2 9680 2299 Fax: (61) 2 9680 1545
2	**CHINA**	WUXI NEWAGE ALTERNATORS LIMITED Plot 49-A, Xiang Jiang Road Wuxi High – Technical Industrial Dev.Zone Wuxi, Jiangsu 214028 PR of China Tel.: (86) 510 521 6212 Fax: (86) 510 521 7673
3	**GERMANY**	AvK DEUTSCHLAND GmbH & Co. KG Niederlassung Dreieich Benzstrasse 47-49 D-63303 Dreieich Tel: (49) 61 03 50 39 0 Fax: (49) 61 03 50 39 40
4	**INDIA**	C.G. NEWAGE ELECTRICAL LIMITED C33 Midc, Ahmednagar 414111, Maharashtra Tel: (91) 241 778 224 Fax: (91) 241 777 494
5	**ITALY**	NEWAGE ITALIA Srl Via Triboniano, 20156 Milan Tel: (39) 02 380 00714 Fax: (39) 02 380 03664
6	**USA**	NEWAGE LTD PO Box 1216 Suit 202 1 Bacton Hill North Frazer PA 19355 USA Tel: (1) 610 578 9233 Fax: (1) 610 578 9244
		'STAMFORD' is a registered trademark of Newage International Ltd.
7	**JAPAN**	NEWAGE INTERNATIONAL JAPAN 8-5- 302 Kashima Hachioji-shi Tokyo, 192-03 Telefone: (81) 426 77 2881 Fax (81) 426 77 2884
8	**MEXICO**	STAMFORD MEXICO S DE RL DE CV Av. Circuito Mexico No. 185 Parque Industrial 3 Naciones San Luis Potosi, SLP C.P. 78395 Tel: (00) 48 26 84 00 Fax: (00) 48 26 84 05
9	**NORWAY**	NEWAGE NORGE A/S Økern Naeringspark, Kabeigt 5 Postboks 28, Økern, 0508 Oslo Tel: Oslo (47) 22 97 44 44 Fax: (47) 22 97 44 45
10	**SINGAPORE**	NEWAGE ASIA PACIFIC PTE LIMITED 10 Toh Guan Road #05-03 TT International Tradepark Singapore 608838 Tel: (65) 794 3730 Fax: (65) 898 9065
11	**SPAIN**	STAMFORD IBERICA SA Poligono Industrial "Los Linares" Avda.de Fuenlabrada, 38 E-28970 HUMANES DE MADRID Tel: (34) 91 498 2000 Fax : (34) 91 498 2124
12	**FRANCE**	NEWAGE INTERNATIONAL 5 Rue Charles de Gaulle 77760 Bouissy Aux Cailles France Tel: (33) 1 6074 9843 Fax: (33) 1 6074 9844
		© 2002 Newage International Ltd Printed in England

NEWAGE AVK SEG

REGISTERED OFFICE AND ADDRESS
NEWAGE LIMITED, PO BOX 17, BARNACK ROAD, STAMFORD
LINCOLNSHIRE, PE9 2NB ENGLAND
Tel: +44 (0) 1780 484 000
Fax:+44 (0) 1780 484 100
Website: www.newage-avkseg.com

Publication No: 2H-056
22nd Edition
02/01

STAMFORD

AC GENERATORS FROM
NEWAGE INTERNATIONAL

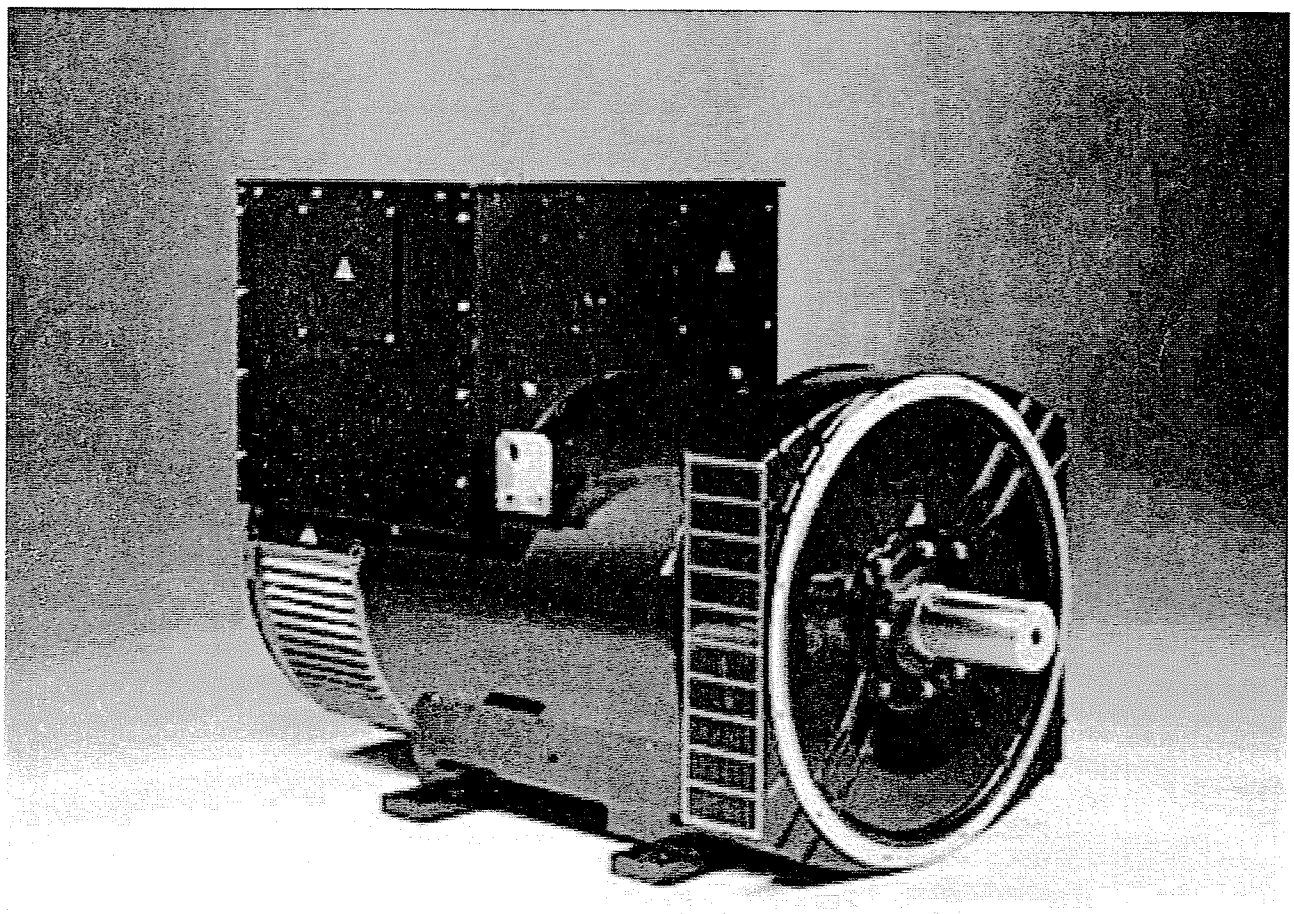

Installation, Service & Maintenance Manual

for AC generators with the following prefixes:

HCI; HCM; HCK 4,5,6,7.

SAFETY PRECAUTIONS

Before operating the generating set, read the generating set operation manual and this generator manual and become familiar with it and the equipment.

SAFE AND EFFICIENT OPERATION CAN ONLY BE ACHIEVED IF THE EQUIPMENT IS CORRECTLY OPERATED AND MAINTAINED.

Many accidents occur because of failure to follow fundamental rules and precautions.

ELECTRICAL SHOCK CAN CAUSE SEVERE PERSONAL INJURY OR DEATH.

Observe all **WARNING/CAUTION** notices.

- Ensure installation meets all applicable safety and local electrical codes. Have all installations performed by a qualified electrician.
- Do not operate the generator with protective covers, access covers or terminal box covers removed.
- Disable engine starting circuits before carrying out maintenance.
- Disable closing circuits and/or place warning notices on any circuit breakers normally used for connection to the mains or other generators, to avoid accidental closure.

Observe all **IMPORTANT, CAUTION, WARNING, and DANGER** notices, defined as:

Important ! **Important refers to hazard or unsafe method or practice which can result in product damage or related equipment damage.**

Caution ! **Caution refers to hazard or unsafe method or practice which can result in product damage or personal injury.**



Warning !

Warning refers to a hazard or unsafe method or practice which CAN result in severe personal injury or possible death.



Danger !

Danger refers to immediate hazards which WILL result in severe personal injury or death.

Due to our policy of continuous improvement, details in this manual which were correct at time of printing, may now be due for amendment. Information included must therefore not be regarded as binding.

Front Cover Photograph
This photograph is representative only. Several variations are available within the range of generators covered by this manual.

FOREWORD

The function of this book is to provide the user of the Stamford generator with an understanding of the principles of operation, the criteria for which the generator has been designed, and the installation and maintenance procedures. Specific areas where the lack of care or use of incorrect procedures could lead to equipment damage and/or personal injury are highlighted, with **WARNING** and/or **CAUTION** notes, and it is important that the contents of this book are read and understood before proceeding to fit or use the generator.

The Service, Sales and technical staff of Newage International are always ready to assist and reference to the company for advice is welcomed.

Warning !

Incorrect installation, operation, servicing or replacement of parts can result in severe personal injury or death, and/or equipment damage.
Service personnel must be qualified to perform electrical and mechanical service.

EC DECLARATION OF INCORPORATION

All Stamford generators are supplied with a declaration of incorporation for the relevant EC legislation, typically in the form of a label as below.

EC DECLARATION OF INCORPORATION

IN ACCORDANCE WITH THE SUPPLY OF MACHINERY (SAFETY) REGULATIONS 1992 AND THE SUPPLY OF MACHINERY (SAFETY) (AMENDMENT) REGULATIONS 1994 IMPLEMENTING THE EC MACHINERY DIRECTIVE 89/392/EEC AS AMENDED BY 91/368/EEC.

THIS **STAMFORD A.C. GENERATOR** WAS MANUFACTURED BY OR ON BEHALF OF
NEWAGE INTERNATIONAL LTD
BARNACK ROAD STAMFORD LINCOLNSHIRE ENGLAND.

THIS COMPONENT MACHINERY MUST NOT BE PUT INTO SERVICE UNTIL THE MACHINERY INTO WHICH IT IS TO BE INCORPORATED HAS BEEN DECLARED IN CONFORMITY WITH THE PROVISIONS OF THE SUPPLY OF MACHINERY (SAFETY) REGULATIONS 1995/MACHINERY DIRECTIVE.

FOR AND ON BEHALF OF NEWAGE INTERNATIONAL LIMITED

NAME: **LAWRENCE HAYDOCK**
POSITION: **TECHNICAL DIRECTOR**
SIGNATURE:

THIS COMPONENT MACHINERY CARRIES THE CE MARK FOR COMPLIANCE WITH THE STATUTORY REQUIREMENTS FOR THE IMPLEMENTATION OF THE FOLLOWING DIRECTIVES

The EMC Directive 89/336/EEC
WARNING! This Component Machinery shall not be used in the Residential, Commercial and Light Industrial environment unless it also conforms to the relevant standard (EN 50081 - 1) REFER TO FACTORY FOR DETAILS

ii) The Low Voltage Directive 73/23/EEC as amended by 93/68/EEC

CE

ELECTROMAGNETIC COMPATIBILITY

Additional Information

European Union
Council Directive 89/336/EEC

For installations within the European Union, electrical products must meet the requirements of the above directive, and Newage ac generators are supplied on the basis that:

- They are to be used for power-generation or related function.
- They are to be applied in one of the following environments:

  Portable (open construction - temporary site supply)
  Portable (enclosed - temporary site supply)
  Containerised (temporary or permanent site supply)
  Ship-borne below decks (marine auxiliary power)
  Commercial vehicle (road transport / refrigeration etc)
  Rail transport (auxiliary power)
  Industrial vehicle (earthmoving, cranes etc)
  Fixed installation (industrial - factory / process plant)
  Fixed installation (residential, commercial and light industrial - home / office / health)
  Energy management (Combined heat and power and/or peak lopping)
  Alternative energy schemes

- The standard generators are designed to meet the 'industrial' emissions and immunity standards. Where the generator is required to meet the residential, commercial and light industrial emissions and immunity standards reference should be made to Newage document reference N4/X/011, as additional equipment may be required.
- The installation earthing scheme involves connection of the generator frame to the site protective earth conductor using a minimum practical lead length.
- Maintenance and servicing with anything other than factory supplied or authorised parts will invalidate any Newage liability for EMC compliance.
- Installation, maintenance and servicing is carried out by adequately trained personnel fully aware of the requirements of the relevant EC directives

Katolight Service - Master Repair Manual - Page 983

CONTENTS

SAFETY PRECAUTIONS			**IFC**
FOREWORD			**1**
CONTENTS			**2&3**
SECTION 1		**INTRODUCTION**	**4**
	1.1	INTRODUCTION	4
	1.2	DESIGNATION	4
	1.3	SERIAL NUMBER LOCATION	4
	1.4	RATING PLATE AND CE MARK	4
SECTION 2		**PRINCIPLE OF OPERATION**	**5**
	2.1	SELF-EXCITED AVR CONTROLLED GENERATORS	5
	2.2	PERMANENT MAGNET GENERATOR (PMG) EXCITED - AVR CONTROLLED GENERATORS	5
	2.3	AVR ACCESSORIES	5
SECTION 3		**APPLICATION OF THE GENERATOR**	**6**
	3.1	VIBRATION	7
SECTION 4		**INSTALLATION - PART 1**	**8**
	4.1	LIFTING	8
	4.2	ENGINE TO GENERATOR COUPLING ASSEMBLY	8
	4.2.1	TWO BEARING GENERATORS	8
	4.2.2	SINGLE BEARING GENERATORS TYPES HC & HCK	8
	4.3	EARTHING	9
	4.4	PRE-RUNNING CHECKS	9
	4.4.1	INSULATION CHECK	9
	4.4.2	DIRECTION OF ROTATION	9
	4.4.2.1	FAN TYPES	9
	4.4.2.2.	DIRECTION OF ROTATION	9
	4.4.3	VOLTAGE AND FREQUENCY	9
	4.4.4	AVR SETTINGS	9
	4.4.4.1	TYPE SX440 AVR	10
	4.4.4.2	TYPE SX421 AVR	10
	4.4.4.3	TYPE MX341 AVR	10
	4.4.4.4	TYPE MX321 AVR	11
	4.5	GENERATOR SET TESTING	11
	4.5.1	TEST METERING/CABLING	11
	4.6	INITIAL START-UP	11
	4.7	LOAD TESTING	12
	4.7.1	AVR ADJUSTMENTS	12
	4.7.1.1	UFRO (Under Frequency Roll Off) (AVR Types SX440, SX421, MX341 and MX321)	13
	4.7.1.2	EXC TRIP (Excitation Trip)	13
	4.7.1.3	OVER/V (Over Voltage)	13
	4.7.1.4	TRANSIENT LOAD SWITCHING ADJUSTMENTS	13
	4.7.1.5	RAMP	14
	4.8	ACCESSORIES	14
SECTION 5		**INSTALLATION - PART 2**	**14**
	5.1	GENERAL	14
	5.2	GLANDING	14
	5.3	MAXIMUM TORQUE SETTINGS FOR CUSTOMER TERMINAL CONNECTIONS	14
	5.4	EARTHING	14
	5.5	PROTECTION	14
	5.6	COMMISSIONING	14

CONTENTS

SECTION 6		**ACCESSORIES**	**15**
	6.1	REMOTE VOLTAGE ADJUST (ALL AVR TYPES)	15
	6.2	PARALLEL OPERATION	15
	6.2.1	DROOP	15
	6.2.1.1	SETTING PROCEDURE	16
	6.2.2	ASTATIC CONTROL	16
	6.3	MANUAL VOLTAGE REGULATOR (MVR) - MX341 and MX321`AVR	16
	6.4.	OVERVOLTAGE DE-EXCITATION BREAKER SX421 and MX321 AVR	16
	6.4.1	RESETTING THE EXCITATION BREAKER	17
	6.5	CURRENT LIMIT - MX321 AVR	17
	6.5.1	SETTING PROCEDURE	17
	6.6	POWER FACTOR CONTROLLER (PFC3)	17
SECTION 7		**SERVICE AND MAINTENANCE**	**18**
	7.1	WINDING CONDITION	18
	7.1.1	WINDING CONDITION ASSESSMENT	18
	7.1.2	METHODS OF DRYING OUT GENERATORS	18
	7.2	BEARINGS	19
	7.3	AIR FILTERS	21
	7.3.1	CLEANING PROCEDURE	21
	7.3.2	RECHARGING (CHARGING)	21
	7.4	FAULT FINDING	21
	7.4.1	SX440 AVR - FAULT FINDING	21
	7.4.2	SX421 AVR - FAULT FINDING	21
	7.4.3	MX341 AVR - FAULT FINDING	22
	7.4.4	MX321 AVR - FAULT FINDING	22
	7.4.5	RESIDUAL VOLTAGE CHECK	22
	7.4.6	'REFLASHING' TO RESTORE RESIDUAL	22
	7.5	SEPARATE EXCITATION TEST PROCEDURE	23
	7.5.1	GENERATOR WINDINGS, ROTATING DIODES and PERMANENT MAGNET GENERATOR (PMG)	23
	7.5.1.1	BALANCED MAIN TERMINAL VOLTAGES	23
	7.5.1.2	UNBALANCED MAIN TERMINAL VOLTAGES	24
	7.5.2	EXCITATION CONTROL TEST	25
	7.5.2.1	AVR FUNCTION TEST	25
	7.5.3	REMOVAL AND REPLACEMENT OF COMPONENT ASSEMBLIES	25
	7.5.3.1	ANTI-CONDENSATION HEATERS	25
	7.3.3.2	REMOVAL OF PERMANENT MAGNET GENERATOR (PMG)	25
	7.5.3.3	REMOVAL OF BEARINGS	25
	7.5.3.4	MAIN ROTOR ASSEMBLY	29
	7.6	RETURNING TO SERVICE	30
	7.7	MAINTENANCE OF REGREASABLE BEARINGS	30
SECTION 8		**SPARES AND AFTER SALES SERVICE**	**31**
	8.1	RECOMMENDED SPARES	31
	8.2	AFTER SALES SERVICE	31

Katolight Service - Master Repair Manual - Page 985

SECTION 1

INTRODUCTION

1.1 INTRODUCTION

The HC range of generators is of brushless rotating field design, available up to 660V at 50 Hz or 60 Hz and built to meet BS5000 Part 3 and international standards.

1500 rpm (50Hz) or 1800 rpm (60Hz) 4 pole generators are available from 200kW to 2000kW in four frame sizes - HC4, HC5, HC6 and HC7.

1000 rpm (50Hz) or 1200 rpm (60Hz) 6 pole generators are available from 224kW to 1300kW in two frame sizes - HC6 and HC7.

Frame sizes HC4 and HC5 may be provided with a stator fed excitation system using SX440 or SX421 AVR, or with the permanent magnet generator (PMG) powered excitation system, using the MX341 or MX321 AVR.

Frames HC6 and HC7 are fitted with the PMG system using the MX321 AVR.

1.2 DESIGNATION

H	C	·	I	4	4	4	C	1
H	C	·	M	5	3	4	C	2
H	C	·	I	6	3	4	G	1
H	C	·	I	6	3	6	G	2
H	C	·	M	7	3	4	G	2

GENERATOR TYPE HC

SPECIFIC TYPE K = VOLUTED ADAPTOR AND UNI-DIRECTIONAL FAN

INDUSTRIAL = (I) OR MARINE = (M)

FRAME SIZE AND CONTROL TYPE ON HC/MV

NUMBER OF POLES 4, OR 6

CORE LENGTH

NUMBER OF BEARINGS 1 OR 2

1.3 SERIAL NUMBER LOCATION

Each generator has its unique serial number stamped in to the upper section of the drive end frame end-ring.

Inside the terminal box two adhesive rectangular labels have been fixed, each carrying the generators unique identity number. One label has been fixed to the inside of the terminal box sheet metal work, and the second label fixed to the main frame of the generator.

1.4 RATING PLATE AND CE MARK

The generator has been supplied with a self adhesive rating plate label to enable fitting after final assembly and painting. It is intended that this label will be stuck to the outside of the non drive end of the terminal box.

A CE Mark label is also supplied loose for fitment after final assembly and painting. This should be attached to an external surface of the Generator at a suitable location where it will not be obscured by the customer's wiring or other fittings. Before fitting the CE Mark label the genset builder must address the requirements of the relevant EC legislation to ensure the compliance of the genset as a whole. CE compliance will also need to be addressed when installed on site.

The surface in the area where a label is to be stuck must be flat, clean, and any paint finish be fully dry before attempting to attach label. Recommended method for attaching label is peel and fold back sufficient of the backing paper to expose some 20 mm of label adhesive along the edge which is to be located against the sheet metal protrusions. Once this first section of label has been carefully located and stuck into position the backing paper can be progressively removed, as the label is pressed down into position. The adhesive will achieve a permanent bond in 24 hours.

SECTION 2

PRINCIPLE OF OPERATION

2.1 SELF-EXCITED AVR CONTROLLED GENERATORS

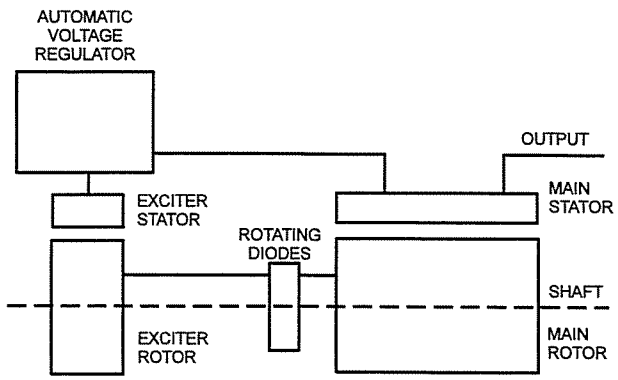

Fig. 1

The main stator provides power for excitation of the exciter field via the SX440 (or SX421) AVR which is the controlling device governing the level of excitation provided to the exciter field. The AVR responds to a voltage sensing signal derived from the main stator winding. By controlling the low power of the exciter field, control of the high power requirement of the main field is achieved through the rectified output of the exciter armature.

The SX440 AVR senses average voltage on two phases ensuring close regulation. In addition it detects engine speed and provides voltage fall off with speed, below a pre-selected speed (Hz) setting, preventing over-excitation at low engine speeds and softening the effect of load switching to relieve the burden on the engine.

The SX421 AVR in addition to the SX440 features has three phase rms sensing and also provides for over voltage protection when used in conjunction with an external circuit breaker (switchboard mounted).

2.2 PERMANENT MAGNET GENERATOR (PMG) EXCITED - AVR CONTROLLED GENERATORS

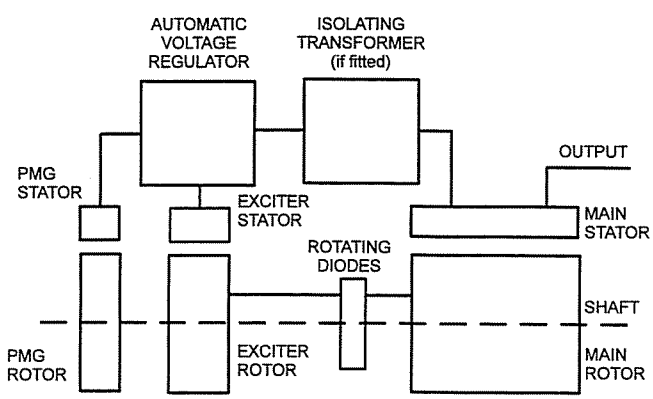

Fig. 2

The permanent magnet generator (PMG) provides power for excitation of the exciter field via the AVR MX341 (or MX321) which is the controlling device governing the level of excitation provided to the exciter field. The AVR responds to a voltage sensing signal derived, via an isolating transformer in the case of MX321 AVR, from the main stator winding. By controlling the low power of the exciter field, control of the high power requirement of the main field is achieved through the rectified output of the exciter armature.

The PMG system provides a constant source of excitation power irrespective of main stator loading and provides high motor starting capability as well as immunity to waveform distortion on the main stator output created by non linear loads, e.g. thyristor controlled dc motor.

The MX341 AVR senses average voltage on two phases ensuring close regulation. In addition it detects engine speed and provides an adjustable voltage fall off with speed, below a pre-selected speed (Hz) setting, preventing over-excitation at low engine speeds and softening the effect of load switching to relieve the burden on the engine. It also provides over-excitation protection which acts following a time delay, to de-excite the generator in the event of excessive exciter field voltage.

The MX321 provides the protection and engine relief features of the MX341 and additionally incorporates 3 phase rms sensing and over-voltage protection.

The detailed function of all the AVR circuits is covered in the load testing section (subsection 4.7).

2.3 AVR ACCESSORIES

The SX440, SX421, MX341 and MX321 AVRs incorporate circuits which, when used in conjunction with accessories, can provide for parallel operation either with 'droop' or 'astatic' control, VAR/PF control and in the case of the MX321 AVR, short circuit current limiting.

Function and adjustment of the accessories which can be fitted inside the generator terminal box are covered in the accessories section of this book.

Separate instructions are provided with other accessories available for control panel mounting.

Katolight Service - Master Repair Manual - Page 987

SECTION 3

APPLICATION OF THE GENERATOR

The generator is supplied as a component part for installation in a generating set. It is not, therefore, practicable to fit all the necessary warning/hazard labels during generator manufacture. The additional labels required are packaged with this Manual, together with a drawing identifying their locations. (see below).

It is the responsibility of the generating set manufacturer to ensure that the correct labels are fitted, and are clearly visible.

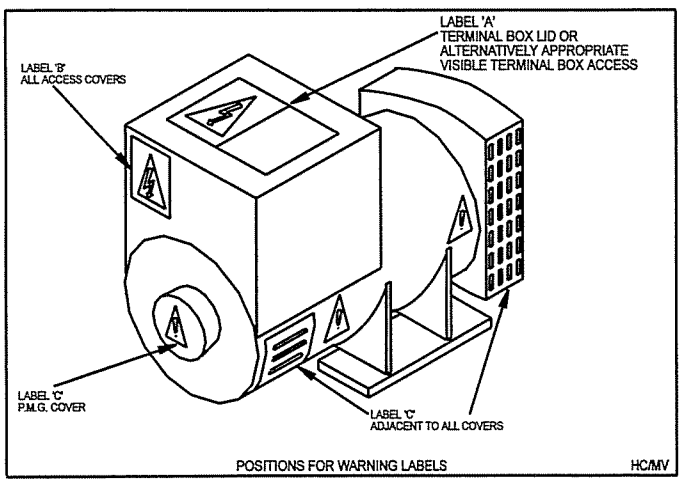

POSITIONS FOR WARNING LABELS HC/MV

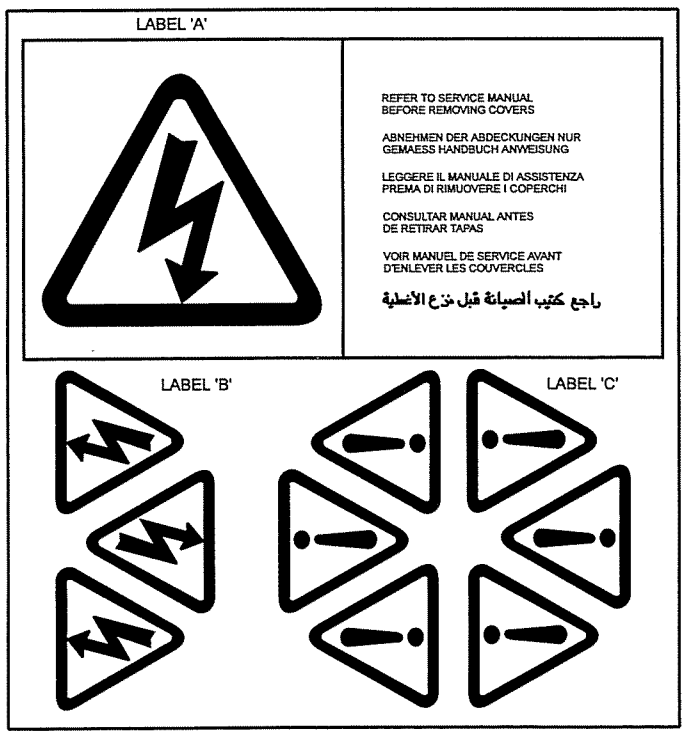

The generators have been designed for use in a maximum ambient temperature of 40°C, and altitude less than 1000 metres above sea level in accordance with BS5000.

Ambients in excess of 40°C, and altitudes above 1000 metres can be tolerated with reduced ratings - refer to the generator nameplate for rating and ambient.

In the event that the generator is required to operate in an ambient in excess of the nameplate value or at altitudes in excess of 1000 metres above sea level, refer to the factory.

The generators are of air-ventilated screen protected drip-proof design and are not suitable for mounting outdoors unless adequately protected by the use of canopies. Anti-condensation heaters are recommended during storage and for standby duty to ensure winding insulation is maintained in good condition.

When installed in a closed canopy it must be ensured that the ambient temperature of the cooling air to the generator does not exceed that for which the generator has been rated.

The canopy should be designed such that the engine air intake to the canopy is separated from the generator intake, particularly where the radiator cooling fan is required to draw air into the canopy. In addition the generator air intake to the canopy should be designed such that the ingress of moisture is prohibited, preferably by use of a two stage filter.

The air intake/outlet must be suitable for the air flow given in the following table with additional pressure drops less than or equal to those given below:

Frame	Air Flow		Additional (intake/outlet) Pressure Drop
	50Hz 1500 Rev/Min	60Hz 1800 Rev/Min	
HC4	0.48m³/sec	0.58m³/sec	6mm water gauge
	1030cfm	1240cfm	(0.25")
HCK4	0.68m³/sec	0.83m³/sec	6mm water gauge
	1450cfm	1760cfm	(0.25")
HC5	1.04m³/sec	1.31m³/sec	6mm water gauge
	2202cfm	2708cfm	(0.25")
HCK5	1.23m³/sec	1.59m³/sec	6mm water gauge
	2615cfm	3366cfm	(0.25")
HC6	1.62m³/sec	1.96m/sec	6mm water gauge
	3420cfm	4156cfm	(0.25")
HC7	2.64m³/sec	3.17m³/sec	6mm water gauge
	5600cfm	6720cfm	(0.25")
HCK7	3.0m³/sec	3.70m³/sec	6mm water gauge
	6550cfm	7860cfm	(0.25")

Table 1

If specified at the time of ordering, HC6 and HC7 generators may be fitted with air filters. Air filters can be supplied factory fitted or as parts for up-fit for the HC4 and HC5 generators. These are oil charged gauze filters and require charging during installation.

Important ! Reduction in cooling air flow or inadequate protection to the generator can result in damage and/or failure of windings.

Dynamic balancing of the generator rotor assembly has been carried out during manufacture in accordance with BS 6861 Part 1 Grade 2.5 to ensure vibration limits of the generator are in accordance with BS 4999 Part 142.

The main vibration frequencies produced by the component generator are as follows:-:

4 pole	1500 rpm	25 Hz
	1800 rpm	30 Hz
6 pole	1000 rpm	16.7 Hz
	1200 rpm	20 Hz

3.1 VIBRATION

Vibrations generated by the engine are complex and contain harmonics of 1.5, 3, 5 or more times the fundamental frequency of vibration. The generator will be subjected to this vibration, which will result in the generator being subjected to vibration levels higher than those derived from the generator itself.
Newage generators are designed to withstand the vibration levels encountered on generating sets built to meet the requirements of ISO 8528-9 and BS5000-3. (Where ISO 8528 is taken to be broad band measurements and BS5000 refers to the predominant frequency of any vibrations on the generating set.)

DEFINITION OF BS5000 - 3

Generators shall be capable of continuously withstanding linear vibration levels with amplitudes of 0.25mm between 5Hz and 8Hz and velocities of 9.0mm/s rms between 8 Hz and 200 Hz when measured at any point directly on the carcass or main frame of the machine. These limits refer only to the predominant frequency of vibration of any complex waveform.

DEFINITION OF ISO 8528 - 9

ISO 8528-9 refers to a broad band of frequencies, the broad band is taken to be between 2 Hertz and 300 Hertz. The table below is an example from ISO 8528 - 9 (value 1). This simplified table lists the vibration limits by kVA range and speed for acceptable genset operation.

VIBRATION LEVELS AS MEASURED ON THE GENERATOR				
Engine Speed Min $^{-1}$	SET OUTPUT kVA	VIBRATION DISPLACEMENT mm (rms)	VIBRATION VELOCITY mm/s (rms)	VIBRATION ACCELERATION m/s^2 (rms)
4 POLE 1500 rpm 50 Hz 1800 rpm 60 HZ	≤ 10 kVA	-	-	-
	> 10 but ≤ 50 Kva	0.64	40	25
	> 50 but ≤ 125 kVA	0.4	25	16
	> 125 but ≤ 250 kVA	0.4	25	16
	> 250 kVA	0.32	20	13
6 POLE 1000 rpm 50 Hz 1200 rpm 60 Hz	≥ 250 but ≤ 1250	0.32	20	13
	> 1250	0.29	18	11
The 'Broad band' is taken as 2 Hz - 300 Hz.				

Table 2

It is the responsibility of the generating set designer to ensure the alignment of the genset, stiffness of the bedframe and mountings are such that the vibration limits as defined above are met.

If the vibration levels of the generating set are not within the parameters quoted above :-

1. Consult the genset builder. The genset builder should address the genset design to reduce the vibration levels as much as possible.

2. Discuss, with Newage, the impact of not meeting the above levels on both bearing and generator life expectancy.

Important ! **Exceeding either of the above specifications will have a detrimental effect on the generating set and in particular on the life of the bearings. (See section on bearings). This will invalidate the generator warranty. If you are in any doubt, contact Newage International Limited.**

In standby applications where the running time is limited and reduced life expectancy is accepted, higher levels than specified in BS5000 can be tolerated, up to a maximum of 18mm/sec.

Two bearing generators require a substantial bedplate with engine/generator mounting pads to ensure a good base for accurate alignment. Close coupling of engine to generator can increase the overall rigidity of the set. A flexible coupling, designed to suit the specific engine/generator combination, is recommended to minimise torsional effects.

Alignment of single bearing generators is critical and vibration can occur due to the flexing of the flanges between the engine and generator. A substantial bedplate with engine/generator mounting pads is required.

For the purposes of establishing set design the bending moment at the engine flywheel housing to generator adaptor interface should not exceed that given in the table below:-

FRAME	BENDING MOMENT
4/5	140 kgm. (1000ft.lbs.)
6/7	275 kgm. (2000ft.lbs.)

The maximum bending moment of the engine flange must be checked with the engine manufacturer.

Torsional vibrations occur in all engine-driven shaft systems and may be of a magnitude to cause damage at certain critical speeds. It is therefore necessary to consider the torsional vibration effect on the generator shaft and couplings.

It is the responsibility of the generator set manufacturer to ensure compatibility, and for this purpose drawings showing the shaft dimensions and rotor inertias are available for customers to forward to the engine supplier. In the case of single bearing generators coupling details are included.

Important ! **Torsional incompatibility and/or excessive vibration levels can cause damage or failure of generator and/or engine components.**

The standard terminal box is arranged for cable entry on the right hand side looking from the non drive end of the generator. If specified at the time of order cable entry may be arranged on the opposite side.

The terminal box is constructed with removable panels for easy adaptation to suit specific glanding requirements. Within the terminal box there are insulated terminals for line and neutral connections and provision for earthing. Additional earthing points are provided on the generator feet.



Warning ! **No earth connections are made on the generator and reference to site regulations for earthing must be made. Incorrect earthing or protection arrangements can result in personal injury or death.**

The neutral is NOT connected to the frame.

Fault current curves (decrement curves), together with generator reactance data, are available on request to assist the system designer to select circuit breakers, calculate fault currents and ensure discrimination within the load network.



Warning ! **Incorrect installation, service or replacement of parts can result in severe personal injury or death, and/or equipment damage. Service personnel must be qualified to perform electrical and mechanical service.**

Katolight Service - Master Repair Manual - Page 989

SECTION 4

INSTALLATION - PART 1

4.1 LIFTING

Warning ! **Incorrect lifting or inadequate lifting capacity can result in severe personal injury or equipment damage. MINIMUM LIFTING CAPACITY REQUIRED IS AS INDICATED ON THE LIFTING LABEL. Generator lifting lugs should not be used for lifting the complete generating set.**

Two lifting lugs are provided for use with a shackle and pin type lifting aid. A spreader with chains to ensure that the lift is vertical of suitable length and lifting capacity must be used. Lifting points are designed to position the craneage point as close to the centre of gravity of the generator as possible, but due to design restrictions it is not possible to guarantee that the generator frame will remain horizontal while lifting. Care is therefore needed to avoid personal injury or equipment damage. The correct lifting arrangement is shown on the label attached to the lifting lug. (See sample below).

IMPORTANT

REFER TO SERVICE MANUAL BEFORE REMOVING COVERS. IT IS THE GENERATOR SET MANUFACTURER'S RESPONSIBILITY TO FIT THE SELF ADHESIVE WARNING LABELS SUPPLIED WITH THE GENERATOR. THE LABEL SHEET CAN BE FOUND WITH THE INSTRUCTION BOOK.

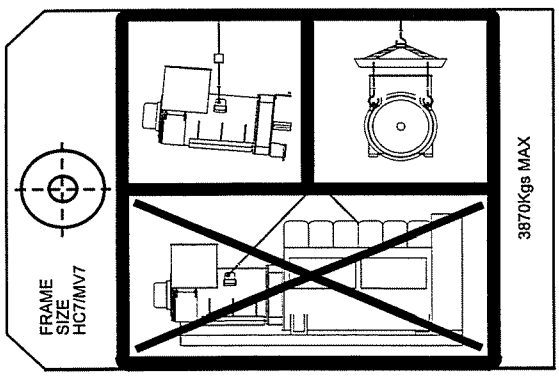

Fig. 3

Single bearing generators are supplied fitted with a rotor retaining bar at the drive end of the shaft. Single bearing generators are also fitted with wooden wedges supporting the fan for transit purposes.

Once the bar is removed to couple the rotor to engine, the rotor is free to move in the frame, and care is needed during coupling and alignment to ensure the frame is kept in the horizontal plane.

4.2 ENGINE TO GENERATOR COUPLING ASSEMBLY

During the assembly of the Generator to the Engine it will be necessary to firstly carefully align, then rotate, the combined Generator rotor - Engine crankshaft assembly, as part of the construction process, to allow location, insertion and tightening of the coupling bolts. This requirement to rotate the combined assemblies exists for both single and two bearing units.

During the construction of single bearing units it is necessary to align the generator's coupling holes with the engine flywheel holes: it is suggested that two diametrically opposite location dowel pins are fitted to the engine flywheel, over which the generator coupling can slide into final location into the engine flywheel spigot recess. The dowels must be removed and replaced by coupling bolts before the final bolt tightening sequence.

While fitting and tightening the coupling bolts it will be necessary to rotate the Engine crankshaft - Generator rotor assembly. Care should be taken to ensure that rotation is carried out in an approved manner that ensures safe working practice when reaching inside the machine to insert or tighten coupling bolts, and that no component of the assembly is damaged by non-approved methods of assembly rotation.

Engine Manufacturers have available a proprietary tool designed to enable manual rotation of the crankshaft assembly. This tool must always be used, having been engineered as an approved method of assembly rotation, by engaging the manually driven pinion with the engine flywheel starter ring-gear.

Danger ! **Before working inside the generator, during the aligning and fitting of coupling bolts, care should be taken to lock the assembly to ensure there is no possibility of assembly rotational movement.**

4.2.1 TWO BEARING GENERATORS

A flexible coupling should be fitted and aligned in accordance with the coupling manufacturer's instruction.

If a close coupling adaptor is used the alignment of machined faces must be checked by offering the generator up to the engine. Shim the generator feet if necessary. Ensure adaptor guards are fitted after generator/engine assembly is complete. Open coupled sets require a suitable guard, to be provided by the set builder.

Axial loading of the generator bearings should be avoided. Should it be unavoidable contact the factory for advice.

Caution ! **Incorrect guarding and/or generator alignment can result in personal injury and/or equipment damage.**

4.2.2 SINGLE BEARING GENERATORS TYPES HC & HCK

For transit and storage purposes the generator frame spigot and rotor coupling plates have been coated with a rust preventative. This MUST BE removed before assembly to engine.

A practical method for removal of this coating is to clean the mating surface areas with a de-greasing agent based on a petroleum solvent.

Caution ! **Care should be taken not to allow any cleaning agent to come into prolonged contact with skin.**

Alignment of single bearing generators is critical. If necessary shim the generator feet to ensure alignment of the machined surfaces.

The sequence of assembly to the engine should generally be as follows:

1. On the engine check the distance from the coupling mating face on the flywheel to the flywheel housing mating face. This should be within 0.5mm of nominal dimension. This is necessary to ensure that a thrust is not applied to the ac generator bearing or engine bearing.

2. Check that the bolts securing the flexible plates to the coupling hub are tight and locked into position. Refer to Section 7, subsection 7.5.3.4 for tightening torques.

3. Remove covers from the drive end of the generator to gain access to coupling and adaptor bolts. Check coupling joint interfaces are clean and lubricant free.

4. **TYPE HC GENERATORS**

   Check that coupling discs are concentric with adaptor spigot. This can be adjusted by the use of tapered wooden wedges between the fan and adaptor. Alternatively the rotor can be suspended by means of a rope sling through the adaptor opening.

   Offer the generator to engine and engage both coupling discs and housing spigots at same time, pushing generator towards engine until coupling discs are against flywheel face, and housing spigots located.

   TYPE HCK GENERATORS

   Screw the two supplied location studs into diametrically opposite engine flywheel tapped holes, about the horizontal centre line. Offer the generator to engine, locating rotor coupling discs over the location studs, pushing generator towards engine until housing spigots locate and coupling discs are against flywheel face.

5. Fit housing and coupling bolts taking care to use heavy gauge washers between coupling bolt head and coupling disc. Tighten bolts evenly around assembly sufficiently to ensure correct alignment.

   TYPE HCK GENERATORS

   Remove location studs and replace with coupling-flywheel bolts.

6. Tighten housing bolts.

7. Tighten coupling disc to flywheel bolts. Refer to engine manufacturers manual for correct tightening torque.

8. **TYPE HC GENERATORS**

   Remove rotor aligning aids, either wooden wedges, or the two M10 set screws and sheet metal wear plates.

Caution ! **Incorrect guarding and/or generator alignment can result in personal injury and/or equipment damage.**

4.3 EARTHING

The generator frame should be solidly bonded to the generating set bedplate. If antivibration mounts are fitted between the generator frame and its bedplate a suitably rated earth conductor (normally one half of the cross sectional area of the main line cables) should bridge across the antivibration mount.



Warning ! **Refer to local regulations to ensure that the correct earthing procedure has been followed.**

4.4 PRE-RUNNING CHECKS

4.4.1 INSULATION CHECK

Insulation tests should be carried out before running the generating set, both after assembly and after installation on site. (see Section 7.1).

Important ! **The windings have been H.V. tested during manufacture and further H.V. testing may degrade the insulation with consequent reduction in operating life. Should it be necessary to demonstrate H.V. testing, for customer acceptance, the tests must be carried out at reduced voltage levels i.e. Test Voltage= 0.8 (2 X Rated Voltage + 1000)**

4.4.2 DIRECTION OF ROTATION

4.4.2.1 FAN TYPES.

TYPE HC 4 & 5 GENERATORS.

These machines are fitted with a radial bladed bi-directional fan, operating within a conventional full height air outlet grills.

TYPE HC 6 & 7 GENERATORS.

These machines are fitted with an inclined bladed fan , operating within a conventional full height air outlet grills.

TYPE HCK 4, 5, & 7 GENERATORS.

These machines are fitted with a inclined bladed fan, operating within a voluted drive end adaptor with outlet grills half thee machine height . Designed to optimise the fans performance.

4.4.2.2 DIRECTION OF ROTATION

TYPE HCK GENERATORS.

These machines have been designed with an improved cooling fan system, incorporating the voluted fan housing. Therefore these machines are suitable only for clockwise rotation, as viewed from the drive end.

TYPE HC GENERATORS.

These machines can be operated in either direction of rotation.

Phase Rotation

HC generators can rotate efficiently in either direction. However phase rotation is fixed for clockwise rotation as viewed from the drive end. If the generator is to be rotated in a counter-clockwise direction it will be necessary for the customers to adjust their cabling to the output terminals accordingly. Refer to the factory for a reverse wiring diagram.

4.4.3 VOLTAGE AND FREQUENCY

Check that the voltage and frequency levels required for the generating set application are as indicated on the generator nameplate.

HC4/5 generators normally have a 12 ends out reconnectable winding. If it is necessary to reconnect the stator for the voltage required, refer to diagrams in the back of this manual.

4.4.4 AVR SETTINGS

To make AVR selections and adjustments remove the AVR cover and refer to 4.4.4.1, 4.4.4.2, 4.4.4.3 or 4.4.4.4 depending upon type of AVR fitted. Reference to the generator nameplate will indicate AVR type (SX440, SX421, MX341 or MX321).

Most of the AVR adjustments are factory set in positions which will give satisfactory performance during initial running tests. Subsequent adjustment may be required to achieve optimum performance of the set under operating conditions. Refer to 'Load Testing' section for details.

4.4.4.1 TYPE SX440 AVR

The following 'jumper' connections on the AVR should be checked to ensure they are correctly set for the generating set application.

Refer to Fig. 4a for location of selection links.

1. Frequency selection terminals

50Hz operation	LINK C-50
60Hz operation	LINK C-60

2. Stability selection terminals

Frame HC4/5	LINK B-C
Frame HC6/7	LINK A-B

3. Sensing selection terminals

	LINK 2-3
	LINK 4-5
	LINK 6-7

4. Excitation Interruption Link

LINK K1-K2

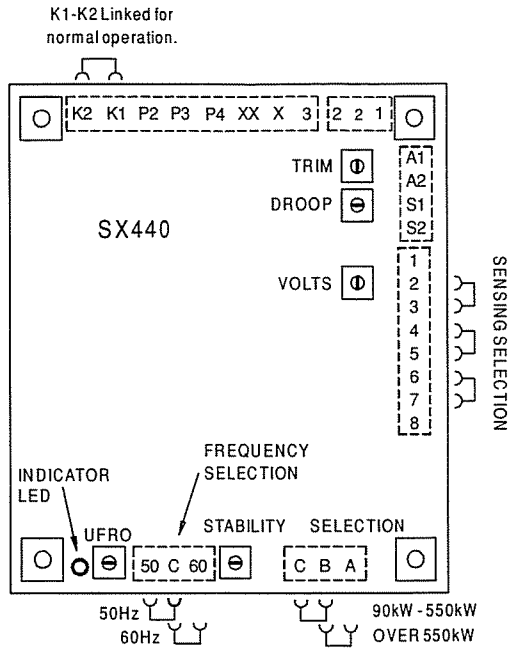

Fig. 4a

4.4.4.2 TYPE SX421 AVR

The following 'jumper' connections on the AVR should be checked to ensure they are correctly set for the generating set application.

Refer to Fig. 4b for location of selection links.

1.Frequency selection terminals

50Hz operation	LINK C-50
60Hz operation	LINK C-60

2.Stability selection terminals

Frame HC4/5	LINK B-C
Frame HC6/7	LINK A-B

3. Excitation Interruption Link

Linked at auxiliary terminal block. K1-K2

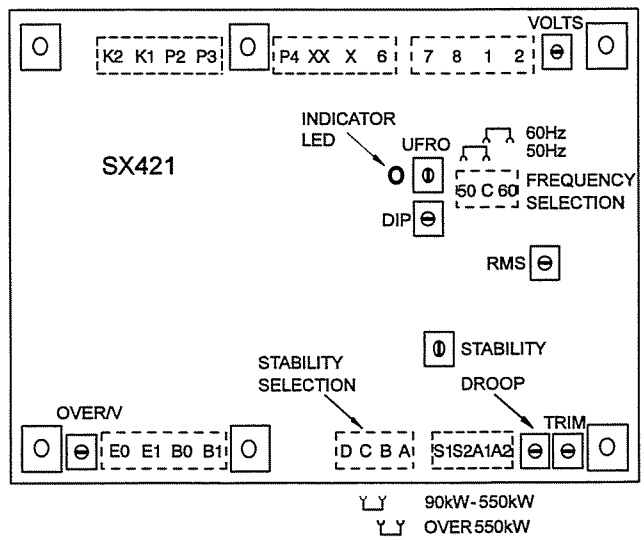

Fig. 4b

4.4.4.3 TYPE MX341 AVR

The following 'jumper' connections on the AVR should be checked to ensure they are correctly set for the generating set application.

Refer to Fig. 4c for location of selection links.

4 pole	50Hz operation	LINK 2-3
4 pole	60Hz operation	LINK 1-3
6 pole	50Hz operation	NO LINK
6 pole	60Hz operation	LINK 1-2

2. Stability selection terminals

Frame HC4/5	LINK B-C
Frame HC6/7	LINK A-B

3. Sensing selection terminals

	LINK 2-3
	LINK 4-5
	LINK 6-7

4. Excitation Interruption Link

LINK K1-K2

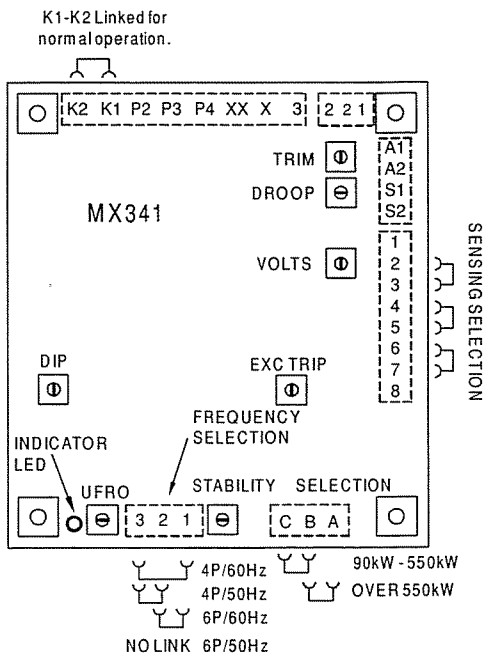

Fig. 4c

4.4.4.4 TYPE MX321 AVR

The following 'jumper' connections on the AVR should be checked to ensure they are correctly set for the generating set application.

Refer to Fig. 4d for location of selection links.

1. Frequency selection terminals

4 pole	50Hz operation	LINK 2-3
4 pole	60Hz operation	LINK 1-3
6 pole	50Hz operation	NO LINK
6 pole	60Hz operation	LINK 1-2

2. Stability selection terminals

Frame HC4/5	LINK B-C
Frame HC6/7	LINK A-B

3. Excitation Interruption Link

Linked at auxiliary terminal block. K1-K2

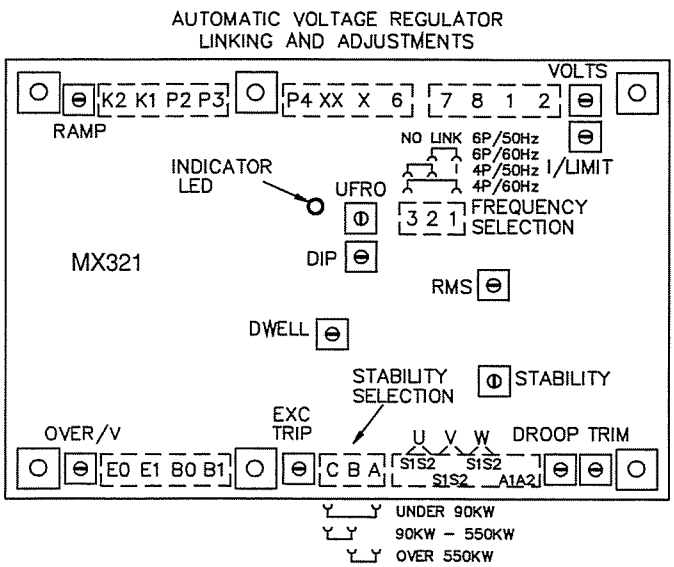

Fig. 4d

4.5 GENERATOR SET TESTING

Warning ! **During testing it may be necessary to remove covers to adjust controls exposing 'live' terminals or components. Only personnel qualified to perform electrical service should carry out testing and/or adjustments.**

4.5.1 TEST METERING/CABLING

Connect any instrument wiring and cabling required for initial test purposes with permanent or spring-clip type connectors.

Minimum instrumentation for testing should be line - line or line to neutral voltmeter, Hz meter, load current metering and kW meter. If reactive load is used a power factor meter is desirable.

Important ! **When fitting power cables for load testing purposes, ensure cable voltage rating is at least equal to the generator rated voltage. The load cable termination should be placed on top of the winding lead termination and clamped between the two nuts provided, on HC4/5 generators.**

Caution ! **Check that all wiring terminations for internal or external wiring are secure, and fit all terminal box covers and guards. Failure to secure wiring and/or covers may result in personal injury and/or equipment failure.**

4.6 INITIAL START-UP

Warning ! **During testing it may be necessary to remove covers to adjust controls exposing 'live' terminals or components. Only personnel qualified to perform electrical service should carry out testing and/or adjustments. Refit all access covers after adjustments are completed.**

On completion of generating set assembly and before starting the generating set ensure that all engine manufacturer's pre-running procedures have been completed, and that adjustment of the engine governor is such that the generator will not be subjected to speeds in excess of 125% of the rated speed.

Important ! **Overspeeding of the generator during initial setting of the speed governor can result in damage to the generator rotating components.**

In addition remove the AVR access cover and turn VOLTS control fully anti-clockwise. Start the generating set and run on no-load at nominal frequency. Slowly turn VOLTS control potentiometer clockwise until rated voltage is reached. Refer to Fig. 4a - 4d for control potentiometer location.

Important ! **Do not increase the voltage above the rated generator voltage shown on the generator nameplate.**

The STABILITY control potentiometer will have been pre-set and should normally not require adjustment, but should this be required, usually identified by oscillation of the voltmeter, refer to Fig. 4a - 4d for control potentiometer location and proceed as follows:-

1. Run the generating set on no-load and check that speed is correct and stable.

2. Turn the STABILITY control potentiometer clockwise, then turn slowly anti-clockwise until the generator voltage starts to become unstable.

The correct setting is slightly clockwise from this position (i.e. where the machine volts are stable but close to the unstable region).

Katolight Service - Master Repair Manual - Page 993

4.7 LOAD TESTING

Warning ! **During testing it may be necessary to remove covers to adjust controls exposing 'live' terminals or components. Only personnel qualified to perform electrical service should carry out testing and/or adjustments. Refit all access covers after adjustments are completed.**

4.7.1 AVR ADJUSTMENTS

Refer to Fig. 4a - 4d for control potentiometer locations.

Having adjusted VOLTS and STABILITY during the initial start-up procedure, other AVR control functions should not normally need adjustment. If instability on load is experienced recheck stability setting. Refer to subsection 4.6.

If however, poor voltage regulation on-load or voltage collapse is experienced, refer to the following paragraphs on each function to a) check that the symptoms observed do indicate adjustment is necessary, and b) to make the adjustment correctly.

4.7.1.1 UFRO (Under Frequency Roll Off) (AVR Types SX440, SX421, MX341 and MX321)

The AVR incorporates an underspeed protection circuit which gives a voltage/speed (Hz) characteristic as shown:

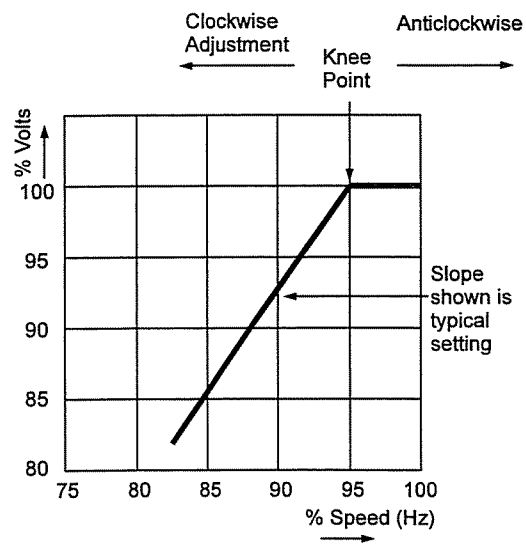

Fig. 5

The UFRO control potentiometer sets the "knee point".

Symptoms of incorrect setting are a) the light emitting diode (LED) indicator, just above the UFRO Control potentiometer, being permanently lit when the generator is on load, and b) poor voltage regulation on load, i.e. operation on the sloping part of the characteristic.

Clockwise adjustment lowers the frequency (speed) setting of the "knee point" and extinguishes the LED. For Optimum setting the LED should illuminate as the frequency falls just below nominal frequency, i.e. 47Hz on a 50Hz generator or 57Hz on a 60Hz generator.

Important ! **With AVR Types MX341 and MX321. If the LED is illuminated and no output voltage is present, refer to EXC TRIP and/or OVER/V sections below.**

4.7.1.2 EXC TRIP (Excitation Trip) AVR Types MX341 and MX321

An AVR supplied from a permanent magnet generator inherently delivers maximum excitation power on a line to line or line to neutral short circuit. In order to protect the generator windings the AVR incorporates an over excitation circuit which detects high excitation and removes it after a pre-determined time, i.e. 8-10 seconds.

Symptoms of incorrect setting are the generator output collapses on load or small overload, and the LED is permanently illuminated.

The correct setting is 70 volts +/- 5% between terminals X and XX.

4.7.1.3 OVER/V (Over Voltage) AVR Types SX421 and MX321

Over voltage protection circuitry is included in the AVR to remove generator excitation in the event of loss of AVR sensing input.

The MX321 has both internal electronic de-excitation and provision of a signal to operate an external circuit breaker.
The SX421 only provides a signal to operate an external breaker, which MUST be fitted if over voltage protection is required.
Incorrect setting would cause the generator output voltage to collapse at no-load or on removal of load, and the LED to be illuminated.

The correct setting is 300 volts +/-5% across terminals E1, E0.

Clockwise adjustment of the OVER/V control potentiometer will increase the voltage at which the circuit operates.

4.7.1.4 TRANSIENT LOAD SWITCHING ADJUSTMENTS AVR Types SX421, MX341 and MX321

The additional function controls of DIP and DWELL are provided to enable the load acceptance capability of the generating set to be optimised. The overall generating set performance depends upon the engine capability and governor response, in conjunction with the generator characteristics.

It is not possible to adjust the level of voltage dip or recovery independently from the engine performance, and there will always be a 'trade off' between frequency dip and voltage dip.

DIP-AVR Types SX421, MX341 and MX321

The dip function control potentiometer adjusts the slope of the voltage/speed (Hz) characteristic below the knee point as shown below:

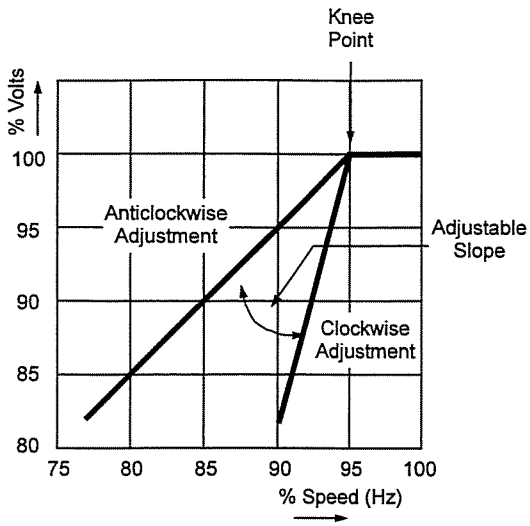

Fig. 6

DWELL-AVR Type MX321

The dwell function introduces a time delay between the recovery of voltage and recovery of speed.

The purpose of the time delay is to reduce the generator kW below the available engine kW during the recovery period, thus allowing an improved speed recovery.

Again this control is only functional below the "knee point", i.e. if the speed stays above the knee point during load switching there is no effect from the DWELL function setting.

Clockwise adjustment gives increased recovery time.

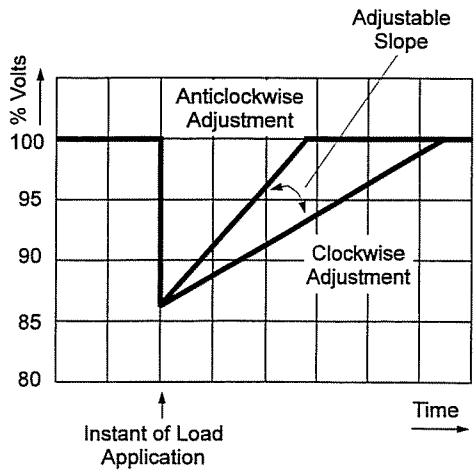

Fig. 7

The graphs shown above are representations only, since it is impossible to show the combined effects of voltage regulator and engine governor performance.

Warning !

Failure to refit covers can result in operator personal injury or death.

4.7.1.5 RAMP
AVR Type MX321

The RAMP potentiometer enables adjustment of the time taken for the generator's initial build up to normal rated voltage during each start and run up to speed. The potentiometer is factory set to give a ramp time of three seconds, which is considered to be suitable for most applications. This time can be reduced to one second by turning the pot. fully counter clockwise, and increased to eight seconds by turning the pot. fully clockwise.

4.8 ACCESSORIES

Refer to the "ACCESSORIES" Section of this Manual for setting up procedures related to generator mounted accessories.

If there are accessories for control panel mounting supplied with the generator refer to the specific accessory fitting procedures inserted inside the back cover of this book.

Replace AVR access cover after all adjustments are completed.

SECTION 5

INSTALLATION - PART 2

5.1 GENERAL

The extent of site installation will depend upon the generating set build, e.g. if the generator is installed in a canopied set with integral switchboards and circuit breaker, on site installation will be limited to connecting up the site load to the generating set output terminals. In this case reference should be made to the generating set manufacturer's instruction book and any pertinent local regulations.

If the generator has been installed on a set without switchboard or circuit breaker the following points relating to connecting up the generator should be noted.

5.2 GLANDING

The terminal box is arranged for glanding on the right hand side (or if specifically ordered on the left hand side) viewed from the non drive end. Both panels are removable for drilling/ punching to suit glands/or glanding boxes. If single core cables are taken through the terminal box side panel an insulated or non-magnetic gland plate should be fitted.

At entry to the terminal box incoming cables should be supported by a recognised glanding method such that minimum unsupported weight, and no axial force is transferred to the terminal assembly.

Incoming cables external to the terminal box should be supported at a sufficient distance from the centre line of the generating set so as to avoid a tight radius at the point of entry into the terminal box panel, and allow movement of the generator set on its anti-vibration mountings without excessive stress on the cable.

Before making final connections, test the insulation resistance of the windings. The AVR should be disconnected during this test and RTD leads grounded.

A 500V Megger or similar instrument should be used. Should the insulation resistance be less than 5MΩ the windings must be dried out as detailed in the Service and Maintenance section of this manual.

When making connections to the terminals of Frame 4 generators, the incoming cable termination lug should be placed on top of the winding lead termination lug(s) and then clamped with the nut provided.

Important ! **To avoid the possibility of swarf entering any electrical components in the terminal box, panels must be removed for drilling.**

5.3 TORQUE SETTINGS FOR TERMINAL CONNECTIONS

Pre treatment: Clean plated surfaces with a degreasing agent, then lightly abrade them to remove any tarnish. Don't score the surface.

The **generator torque settings** for all connections, links, CT's, accessories, cables, etc. is 45 Nm.

The **customer output cables** should be connected to the terminals using 8.8 grade steel bolts and associated anti-vibration hardware.

The following table is for your guidance.

FRAME	HOLE SIZE	BOLT SIZE	TORQUE Nm
4	-	12	45
5	13	12	50
6	17	14	70
7	17	16	90

Table 3

Carry out **periodic checks** to ensure the correct torque settings.

5.4 EARTHING

The neutral of the generator is not bonded to the generator frame as supplied from the factory. An earth terminal is provided inside the terminal box adjacent to the main terminals. Should it be required to operate with the neutral earthed a substantial earth conductor (normally equivalent to one half of the section of the line conductors) must be connected between the neutral and the earth terminal inside the terminal box. It is the responsibility of the generating set builder to ensure the generating set bedplate and generator frame are all bonded to the main earth terminal in the terminal box.

Caution ! **Reference to local electricity regulations or safety rules should be made to ensure correct earthing procedures have been followed.**

5.5 PROTECTION

It is the responsibility of the end user and his contractors/sub-contractors to ensure that the overall system protection meets the needs of any inspectorate, local electricity authority or safety rules, pertaining to the site location.

To enable the system designer to achieve the necessary protection and/or discrimination, fault current curves are available on request from the factory, together with generator reactance values to enable fault current calculations to be made.



Warning ! **Incorrect installation and/or protective systems can result in personal injury and/or equipment damage. Installers must be qualified to perform electrical installation work.**

5.6 COMMISSIONING

Ensure that all external cabling is correct and that all the generating set manufacturer's pre-running checks have been carried out before starting the set.

Generators fitted with air filters should have the filters charged with oil prior to commissioning. Refer to Service Section for charging procedure (subsection 7.3.2).

The generator AVR controls will have been adjusted during the generating set manufacturer's tests and should normally not require further adjustment.

Should malfunction occur during commissioning refer to Service and Maintenance section 'Fault Finding' procedure (subsection 7.4).

SECTION 6

ACCESSORIES

Generator control accessories may be fitted, as an option, in the generator terminal box. If fitted at the time of supply, the wiring diagram(s) in the back of this book shows the connections. When the options are supplied separately, fitting instructions are provided with the accessory.

The following table indicates availability of accessories with the differing AVRs.

AVR Model	Paralleling Droop or Astatic	Manual Voltage Regulator	VAr/PF Control	Current Limit
SX440	✔	×	✔	×
SX421	✔	×	✔	×
MX341	✔	✔	✔	×
MX321	✔	✔	✔	✔

Table 4

6.1 REMOTE VOLTAGE ADJUST (ALL AVR TYPES)

A remote voltage adjust (hand trimmer) can be fitted.

The remote voltage adjustment potentiometer is connected across AVR terminals 1-2.

These terminals are normally linked.

When the remote voltage adjust potentiometer is used the link across terminals 1-2 must be removed.

On AVR types SX440 and MX341 the link 1-2 is on an adjacent terminal block.

On AVR types SX421 and MX321 the link 1-2 is on the AVR terminals.

6.2 PARALLEL OPERATION

Understanding of the following notes on parallel operation is useful before attempting the fitting or setting of the droop kit accessory. When operating in parallel with other generators or the mains, it is essential that the phase sequence of the incoming generator matches that of the busbar and also that all of the following conditions are met before the circuit breaker of the incoming generator is closed on to the busbar (or operational generator).

1. Frequency must match within close limits.
2. Voltages must match within close limits.
3. Phase angle of voltages must match within close limits.

A variety of techniques, varying from simple synchronising lamps to fully automatic synchronisers, can be used to ensure these conditions are met.

Once connected in parallel a minimum instrumentation level per generator of voltmeter, ammeter, wattmeter (measuring total power per generator), and frequency meter is required in order to adjust the engine and generator controls to share kW in relation to engine ratings and kVAr in relation to generator ratings.

Important ! Failure to meet conditions 1, 2, and 3 when closing the circuit breaker, will generate excessive mechanical and electrical stresses, resulting in equipment damage.

It is important to recognise that

1. kW are derived from the engine, and speed governor characteristics determine the kW sharing between sets

and

2. kVAr are derived from the generator, and excitation control characteristics determine the kVAr sharing.

Reference should be made to the generating set manufacturer's instructions for setting the governor controls.

6.2.1 DROOP

The most commonly used method of kVAr sharing is to create a generator voltage characteristic which falls with decreasing power factor (increasing kVAr). This is achieved with a current transformer (C.T.) which provides a signal dependent on current phase angle (i.e. power factor) to the AVR.

The current transformer has a burden resistor on the AVR board, and a percentage of the burden resistor voltage is summed into the AVR circuit. Increasing droop is obtained by turning the DROOP control potentiometer clockwise.

The diagrams below indicate the effect of droop in a simple two generator system:-

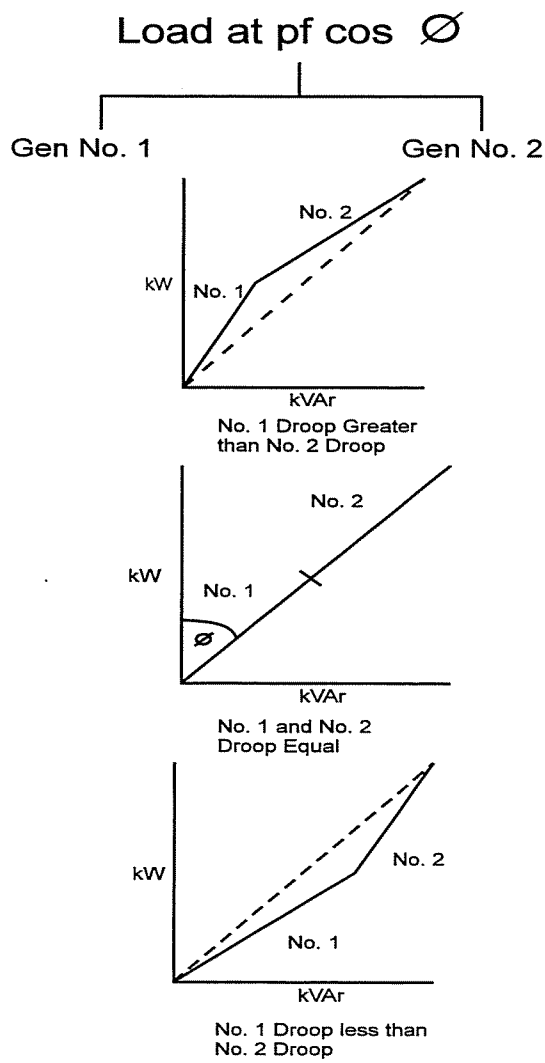

Fig. 8

Katolight Service - Master Repair Manual - Page 997

Generally 5% droop at full load current zero p.f. is sufficient to ensure kVAr sharing.

If the droop accessory has been supplied with the generator it will have been tested to ensure correct polarity and set to a nominal level of droop. The final level of droop will be set during generating set commissioning.

Although nominal droop setting may be factory set it is advisable to go through the setting procedure below.

6.2.1.1 SETTING PROCEDURE

Depending upon available load the following settings should be used - all are based on rated current level.

0.8 P.F. LOAD	(at full load current)	SET DROOP TO 3%
Zero P.F. LOAD	(at full load current)	SET DROOP TO 5%

Setting the droop with low power factor load is the most accurate.

Run each generator as a single unit at rated frequency or rated frequency + 4% depending upon type of governor and nominal voltage. Apply available load to rated current of the generator. Adjust 'DROOP' control potentiometer to give droop in line with above table. Clockwise rotation increases amount of droop. Refer to Fig. 4a - 4d for potentiometer locations.

Note 1)
Reverse polarity of the C.T. will raise the generator voltage with load. The polarities S1-S2 shown on the wiring diagrams are correct for clockwise rotation of the generator looking at the drive end. Reversed rotation requires S1-S2 to be reversed.

Note 2)
The most important aspect is to set all generators equal. The precise level of droop is less critical.

Note 3)
A generator operated as a single unit with a droop circuit set at rated load 0.8 power factor is unable to maintain the usual 0.5% regulation. A shorting switch can be connected across S1-S2 to restore regulation for single running.

Important ! **LOSS OF FUEL to an engine can cause its generator to motor with consequent damage to the generator windings. Reverse power relays should be fitted to trip main circuit breaker.**
LOSS OF EXCITATION to the generator can result in large current oscillations with consequent damage to generator windings. Excitation loss detection equipment should be fitted to trip main circuit breaker.

6.2.2 ASTATIC CONTROL

The 'droop' current transformer can be used in a connection arrangement which enables the normal regulation of the generator to be maintained when operating in parallel.

This feature is only supplied from the factory as a fitted droop kit, however, if requested at the time of order, the diagrams inside the back cover of this book will give the necessary site connections. The end user is required to provide a shorting switch for the droop current transformer secondary.

Important ! **When using this connection arrangement a shorting switch is required across each C.T. burden (terminals S1 and S2.)**
The switch must be closed a) when a generating set is not running and b) when a generating set is selected for single running.

Should the generator be required to be converted from standard droop to 'astatic' control, diagrams are available on request.

The setting procedure is exactly the same as for DROOP. (Subsection 6.2.1.1)

6.3 MANUAL VOLTAGE REGULATOR (MVR) - MX341 and MX321 AVR

This accessory is provided as an 'emergency' excitation system, in the event of an AVR failure.

Powered from a PMG output the unit is manually set, but automatically controls the excitation current, independent of generator voltage or frequency.

The unit is provided with 'MANUAL', 'OFF', 'AUTO' switching facility.

'MANUAL'
- position connects the exciter field to the MVR output. Generator output is then controlled by the operator adjusting the excitation current.

'OFF'
- disconnects the exciter field from both MVR and the normal AVR.

'AUTO'
- connects the exciter field to the normal AVR and the generator output is controlled at the pre-set voltage under AVR control.

6.4 OVERVOLTAGE DE-EXCITATION BREAKER SX421 and MX321 AVR

This accessory provides positive interruption of the excitation power in the event of overvoltage due to loss of sensing or internal AVR faults including the output power device.

With the MX321 AVR this accessory is supplied loose for fitting in the control panel.

In the case of the SX421 the circuit breaker is always supplied and will normally be fitted in the generator.

Important ! **When the CB is supplied loose, terminals K1-K2 at the auxiliary terminal block are fitted with a link to enable operation of the AVR. When connecting the circuit breaker this link must be removed.**

6.4.1 RESETTING THE EXCITATION BREAKER

In the event of operation of the circuit breaker, indicated by loss of generator output voltage, manual resetting is required. When in the "tripped" state the circuit breaker switch lever shows "OFF". To reset move the switch lever to the position showing "ON".



Danger !

Terminals which are LIVE with the generating set running are exposed when the AVR access cover is removed. Resetting of the circuit breaker must be carried out with the generating set stationary, and engine starting circuits disabled.

When fitted in the generator, access to the breaker is gained by removal of the AVR access cover.

The circuit breaker is mounted on the AVR mounting bracket either to the left or to the right of the AVR depending upon AVR position. After resetting the circuit breaker replace the AVR access cover before restarting the generating set. Should resetting of the circuit breaker not restore the generator to normal operation, refer to subsection 7.5.

6.5 CURRENT LIMIT - MX321 AVR

These accessories work in conjunction with the AVR circuits to provide an adjustment to the level of current delivered into a fault. One current transformer (CT) per phase is fitted to provide current limiting on any line to line or line to neutral fault.

Note: The W phase CT can also provide "DROOP". Refer to 6.2.1.1. for setting droop independent of current limit.

Adjustment means is provided with the "I/LIMIT" control potentiometer on the AVR. Refer to Fig. 4d for location. If current limit transformers are supplied with the generator the limit will be set in accordance with the level specified at the time of order, and no further adjustment will be necessary. However, should the level need to be adjusted, refer to the setting procedure given in 6.5.1.

6.5.1 SETTING PROCEDURE

Run the generating set on no-load and check that engine governor is set to control nominal speed.

Stop the generating set. Remove the link between terminals K1-K2 at the auxiliary terminal block and connect a 5A switch across the terminals K1-K2.

Turn the "I/LIMIT" control potentiometer fully anticlockwise. Short circuit the stator winding with a bolted 3 phase short at the main terminals. An AC current clip-on ammeter is required to measure the winding lead current.

With the switch across K1-K2 open start the generating set.

Close the switch across K1-K2 and turn the "I/LIMIT" control potentiometer clockwise until required current level is observed on the clip-on ammeter. As soon as correct setting is achieved open the K1-K2 switch.

Should the current collapse during the setting procedure, the internal protective circuits of the AVR will have operated. In this event shut down the set and open the K1-K2 switch. Restart the set and run for 10 minutes with K1-K2 switch open, to cool the generator windings, before attempting to resume the setting procedure.

Important ! **Failure to carry out the correct COOLING procedure may cause overheating and consequent damage to the generator windings.**

6.6 POWER FACTOR CONTROLLER (PFC3)

This accessory is primarily designed for those generator applications where operation in parallel with the mains supply is required.

Protection against loss of mains voltage or generator excitation is not included in the unit and the system designer must incorporate suitable protection.

The electronic control unit requires both droop and kVAr current transformers. When supplied with the generator, wiring diagrams inside the back cover of this manual show the connections and the additional instruction leaflet provided gives details of setting procedures for the power factor controller (PFC3).

The unit monitors the power factor of the generator current and adjusts excitation to maintain the power factor constant.

This mode can also be used to control the power factor of the mains if the point of current monitoring is moved to the mains cables. Refer to the factory for appropriate details.

It is also possible to operate the unit to control kVAr of the generator if required. Refer to the factory for appropriate details.

SECTION 7

SERVICE AND MAINTENANCE

As part of routine maintenance procedures, periodic attention to winding condition (particularly when generators have been idle for a long period) and bearings is recommended. (Refer to subsections 7.1 and 7.2 respectively).

When generators are fitted with air filters regular inspection and filter maintenance is required. (Refer to subsection 7.3).

7.1 WINDING CONDITION

Warning !

Service and fault finding procedures present hazards which can result in severe personal injury or death. Only personnel qualified to perform electrical and mechanical service should carry out these procedures.
Ensure engine starting circuits are disabled before commencing service or maintenance procedures. Isolate any anti-condensation heater supply.

Guidance of Typical Insulation Resistance [IR] Values

The following is offered as general information about IR values and is aimed at providing guidance about the typical IR values for generators from new through to the point of refurbishment.

New Machines

The generators Insulation Resistance, along with many other critical factors, will have been measured during the alternator manufacturing process. The generator will have been transported with an appropriate packaging suitable for the method of delivery to the Generating Set assemblers works. Where we expect it to be stored in a suitable location protected from adverse environmental conditions.

However, absolute assurance that the generator will arrive at the Gen-set production line with IR values still at the factory test levels of above 100 MΩ cannot be guaranteed.

At Generating Set Manufacturers Works

The generator should have been transported and stored such that it will be delivered to the assembly area in a clean dry condition. If held in appropriate storage conditions the generator IR value should typically be 25 MΩ.

If the unused/new generators IR values fall below 10 MΩ then a drying out procedure should be implemented by one of the processes outlined below before being despatched to the end customer's site. Some investigation should be undertaken into the storage conditions of the generator while on site.

Generators in Service

Whilst It is known that a generator will give reliable service with an IR value of just 1.0 MΩ. For a relatively new generator to be so low it must have been subjected to inappropriate operating or storage conditions.

Any temporarily reduction in IR values can be restored to expected values by following one of the drying out procedures.

7.1.1 WINDING CONDITION ASSESSMENT

Caution ! **The AVR should be disconnected and the Resistance Temperature Detector (R.T.D.) leads grounded during this test.**

The condition of the windings can be assessed by measurement of insulation resistance [IR] between phase to phase, and phase to earth.

Measurement of winding insulation should be carried out: -

1. As part of a periodic maintenance plan.
2. After prolonged periods of shutdown.
3. When low insulation is suspected, e.g. damp or wet windings.

Care should be taken when dealing with windings that are suspected of being excessively damp or dirty. The initial measurement of the [IR] Insulation Resistance should be established using a low voltage (500V) megger type instrument. If manually powered the handle should initially be turned slowly so that the full test voltage will not be applied, and only applied for long enough to very quickly assess the situation if low values are suspected or immediately indicated.

Full megger tests or any other form of high voltage test should not be applied until the windings have been dried out and if necessary cleaned.

Procedure for Insulation Testing

Disconnect all electronic components, AVR, electronic protection equipment etc. Ground the [RTD's] Resistance Temperature Detection devices if fitted. Short out the diodes on the rotating diode assembly. Be aware of all components connected to the system under test that could cause false readings or be damaged by the test voltage.

Carry out the insulation test in accordance with the 'operating instructions for the test equipment.

The measured value of insulation resistance for all windings to earth and phase to phase should be compared with the guidance given above for the various 'life stages' of a generator. The minimum acceptable value must be greater than 1.0 MΩ.

If low winding insulation is confirmed use one or more of the methods, given below, for drying the winding should be carried out.

7.1.2 METHODS OF DRYING OUT GENERATORS

Cold Run

Consider a good condition generator that has not been run for some time, and has been standing in damp, humid conditions. It is possible that simply running the gen set unexcited - AVR terminals K1 K2 open circuit - for a period of say 10 minutes will sufficiently dry the surface of the windings and raise the IR sufficiently, to greater than 1.0 MΩ , and so allow the unit to be put into service.

Blown Air Drying

Remove the covers from all apertures to allow the escape of the water-laden air. During drying, air must be able to flow freely through the generator in order to carry off the moisture.

Direct hot air from two electrical fan heaters of around 1 – 3 kW into the generator air inlet apertures. Ensure the heat source is at least 300mm away from the windings to avoid over heating and damage to the insulation.

Apply the heat and plot the insulation value at half hourly intervals. The process is complete when the parameters covered in the section entitled, 'Typical Drying Out Curve', are met.

Remove the heaters, replace all covers and re-commission as appropriate.

If the set is not to be run immediately ensure that the anti-condensation heaters are energised, and retest prior to running.

Short Circuit Method

NOTE: This process should only be performed by a competent engineer familiar with safe operating practices within and around generator sets of the type in question.

Ensure the generator is safe to work on, initiate all mechanical and electrical safety procedures pertaining to the genset and the site.

Bolt a short circuit of adequate current carrying capacity, across the main terminals of the generator. The shorting link should be capable of taking full load current.

Disconnect the cables from terminals "X" and "XX" of the AVR.

Connect a variable dc supply to the "X" (positive) and "XX" (negative) field cables. The dc supply must be able to provide a current up to 2.0 Amp at 0 - 24 Volts.

Position a suitable ac ammeter to measure the shorting link current.

Set the dc supply voltage to zero and start the generating set. Slowly increase the dc voltage to pass current through the exciter field winding. As the excitation current increases, so the stator current in the shorting link will increase. This stator output current level must be monitored, and not allowed to exceed 80% of the generators rated output current.

After every 30 minutes of this exercise:
Stop the generator and switch off the separate excitation supply, and measure and record the stator winding IR values, and plot the results. The resulting graph should be compared with the classic shaped graph. This drying out procedure is complete when the parameters covered in the section entitled 'Typical Drying Out Curve' are met.

Once the Insulation Resistance is raised to an acceptable level - minimum value 1.0 MΩ – the dc supply may be removed and the exciter field leads "X" and "XX" re-connected to their terminals on the AVR.

Rebuild the genset, replace all covers and re-commission as appropriate.

If the set is not to be run immediately ensure that the anti-condensation heaters are energised, and retest the generator prior to running.

TYPICAL DRYING OUT CURVE

Whichever method is used to dry out the generator the resistance should be measured every half-hour and a curve plotted as shown. (fig 6.)

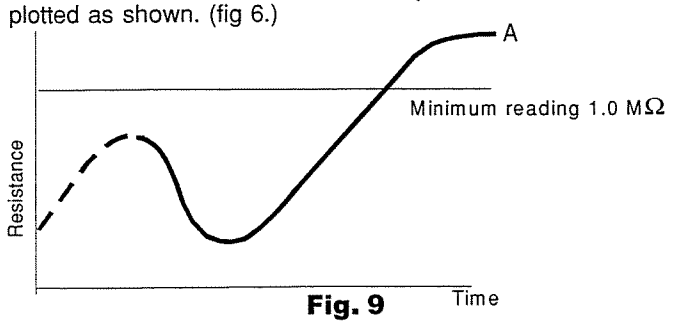

Fig. 9

The illustration shows a typical curve for a machine that has absorbed a considerable amount of moisture. The curve indicates a temporary increase in resistance, a fall and then a gradual rise to a steady state. Point 'A', the steady state, must be greater than 1.0 MΩ. (If the windings are only slightly damp the dotted portion of the curve may not appear).

For general guidance expect that the typical time to reach point 'A' will be:

1 hour for a BC16/18,
2 hours for a UC22/27
3 hours for an HC4,5,6&7

Drying should be continued after point "A" has been reached for at least one hour.

It should be noted that as winding temperature increases, values of insulation resistance may significantly reduce. Therefore, the reference values for insulation resistance can only be established with windings at a temperature of approximately 20°C.

If the IR value remains below 1.0 MΩ, even after the above drying methods have been properly conducted, then a Polarisation Index test [PI] should be carried out.

If the minimum value of 1.0 MΩ for all components cannot be achieved rewinding or refurbishment of the generator will be necessary.

The generator must not be put into service until the minimum values can be achieved.

Important ! The short circuit must not be applied with the AVR connected in circuit. Current in excess of the rated generator current will cause damage to the windings.

After drying out, the insulation resistances should be rechecked to verify minimum resistances quoted above are achieved.
On re-testing it is recommended that the main stator insulation resistance is checked as follows:-
Separate the neutral leads

Ground	V and W	phase and megger	U phase to ground
Ground	U and W	phase and megger	V phase to ground
Ground	U and V	phase and megger	W phase to ground

If the minimum value of 1.0MΩ is not obtained, drying out must be continued and the test repeated.

7.2 BEARINGS

One of two bearing options will be fitted to generators covered by this manual.

Bearing Options		
HC/HCK/HCM	**Regreasable***	**Sealed for life*†**
4	Not available	Standard
5	Optional	Standard
6	Optional	Standard
7	Standard	Not available

Table 5

*All bearings are supplied pre-packed with Kluber Asonic GHY 72 grease.
†Sealed for life bearings are fitted with integral seals and are not regreasable.

BEARING LIFE

Important ! The life of a bearing in service is subject to the working conditions and the environment.

Important ! High levels of vibration from the engine or misalignment of the set will stress the bearing and reduce its service life. If the vibration limits set out in BS 5000-3 and ISO 8528-9 are exceeded bearing life will be reduced. Refer to 'Vibration' below.

Important ! Long stationary periods in an environment where the generator is subject to vibration can cause false brinnelling, which puts flats on the ball and grooves on the races, leading to premature failure.

Katolight Service - Master Repair Manual - Page 1001

Important ! **Very humid atmospheric or wet conditions can emulsify the grease causing corrosion and deterioration of the grease, leading to premature failure of the bearings.**

HEALTH MONITORING OF THE BEARINGS

Newage recommends that the user checks the bearing condition, using monitoring equipment, to determine the state of the bearings. The 'best practice' is to take initial readings as a base line and periodically monitor the bearings to detect a deteriorating trend. It will then be possible to plan a bearing change at an appropriate generating set or engine service interval.

VIBRATION

Newage generators are designed to withstand the vibration levels encountered on generating sets built to meet the requirements of ISO 8528-9 and BS5000-3. (Where ISO 8528 is taken to be broad band measurements and BS5000 refers to the predominant frequency of any vibrations on the generating set.)

DEFINITION of BS5000 - 3

Generators shall be capable of continuously withstanding linear vibration levels with amplitudes of 0.25mm between 5Hz and 8Hz and velocities of 9.0mm/s rms between 8 Hz and 200 Hz when measured at any point directly on the carcass or main frame of the machine. These limits refer only to the predominant frequency of vibration of any complex waveform.

DEFINITION of ISO 8528 - 9

ISO 8528-9 refers to a broad band of frequencies, the broad band is taken to be between 2 Hertz and 300 Hertz. The table below is an example from ISO 8528 - 9 (value 1). This simplified table lists the vibration limits by kVA range and speed for acceptable genset operation.

VIBRATION LEVELS AS MEASURED ON THE GENERATOR				
Engine Speed Min $^{-1}$	SET OUTPUT kVA	VIBRATION DISPLACEMENT mm (rms)	VIBRATION VELOCITY mm/s (rms)	VIBRATION ACCELERATION m/s^2 (rms)
4 POLE 1500 rpm 50 Hz 1800 rpm 60 HZ	≤ 10 kVA	-	-	-
	> 10 but ≤ 50 Kva	0.64	40	25
	> 50 but ≤ 125 kVA	0.4	25	16
	> 125 but ≤ 250 kVA	0.4	25	16
	> 250 kVA	0.32	20	13
6 POLE 1000 rpm 50 Hz 1200 rpm 60 Hz	≥ 250 but ≤ 1250	0.32	20	13
	> 1250	0.29	18	11
The 'Broad band' is taken as 2 Hz - 300 Hz.				

Table 6

Important ! **Exceeding either of the above specifications will have a detrimental effect on the life of the bearing. This will invalidate the generator warranty. If you are in any doubt, contact Newage International Limited.**

If the vibration levels of the generating set are not within the parameters quoted above :-

1. Consult the genset builder. The genset builder should address the genset design to reduce the vibration levels as much as possible.

2. Discuss, with Newage, the impact of not meeting the above levels on both bearing and generator life expectancy.

Where requested, or deemed necessary, Newage will work with the genset builder in an attempt to find a satisfactory solution.

BEARING 'SERVICE LIFE' EXPECTANCY

Bearing manufacturers recognise that the "service life" of their bearings is dependent upon many factors that are not in their control, they cannot therefore quote a "service life".

Although "service life" cannot be guaranteed, it can be maximised by attention to the generating set design. An understanding of the genset application will also help the user to maximise the service life expectancy of the bearings. Particular attention should be paid to the alignment, reduction of vibration levels, environmental protection, maintenance and monitoring procedures.

Newage does not quote life expectancy figures for bearings, but suggests practicable replacement intervals based on the L10 life of the bearing, the grease and the recommendations of the bearing and grease manufacturers.

For general-purpose applications, providing the vibration levels do not exceed the levels stated in ISO 8528-9* and BS5000-3* and the ambient temperature does not exceed 50°C the following approximations can be applied when planning bearing replacements.
*(see section on vibration)

Sealed for Life Bearings. - Approximately 30,000 hours.

Re-greaseable bearings. - Approximately 40,000 hours.

(Provided the correct maintenance is carried out, and only Kluber Asonic GHY 72 grease is used in all bearings.)

It is important to note that bearings in service, under good operating conditions, can continue to run beyond the recommended replacement period. It should also be remembered that the risk of bearing failure increases with time.

If in doubt about any aspect of the 'bearing life' on generators supplied by Newage International, contact your nearest Newage subsidiary or contact the Stamford factory direct.

See the back cover for addresses.

Katolight Service - Master Repair Manual - Page 1002

7.3 AIR FILTERS

Air filters for the removal of airbourne particulate matter (dust) are offered as an addition to the standard build option. Filters on Frame 6 and 7 need to be ordered with the generator but Frame 4 and 5 can have air filters fitted after the generator is built.

Air filters need to be changed with oil before the gen set is put to work (see 7.3.1).

The frequency of filter maintenance will depend upon the severity of the site conditions. Regular inspection of the elements will be required to establish when cleaning is necessary.



Danger!

Removal of filter elements enables access to LIVE parts.
Only remove elements with the generator out of service.

7.3.1 CLEANING PROCEDURE

Remove the filter elements from the filter frames. Immerse or flush the element with a suitable degreasing agent until the element is clean.

As an alternative procedure a high pressure water hose with a flat nozzle can be used. Sweep the water spray back and forth across the element from the clean side (fine mesh side of element) holding the nozzle firmly against the element surface. Cold water may be adequate depending upon type of contamination although hot water is preferable.

The element can be inspected for cleanliness by looking through the filter towards the light.

When thoroughly clean, no cloudy areas will be seen. Dry elements thoroughly before attempting to carry out the recharging procedure.

7.3.2 RECHARGING (CHARGING)

Charging is best done by totally immersing the dry element into a dip tank containing "Filterkote Type K" or commercial lubricating oil SAE 20/50. Oils of higher or lower viscosity are not recommended.

Allow elements to completely drain before refitting the elements into the frames and putting into service.

7.4 FAULT FINDING

Important ! Before commencing any fault finding procedures examine all wiring for broken or loose connections.

Four types of excitation control system, involving four types of AVR, can be fitted to the range of generators covered by this manual. The systems can be identified by a combination of AVR type, where applicable, and the last digit of the generator frame size designation. Refer to the generator nameplate then proceed to the appropriate subsection as indicated below:-

DIGIT	EXCITATION CONTROL	SUBSECTION
4	SX440 AVR	7.4.1
4	SX421 AVR	7.4.2
3	MX341 AVR	7.4.3
3	MX321 AVR	7.4.4

7.4.1 SX440 AVR - FAULT FINDING

No voltage build-up when starting set	1. Check link K1-K2. 2. Check speed. 3. Check residual voltage. Refer to subsection 7.4.5. 4. Follow separate excitation test procedure to check generator and AVR. Refer to subsection 7.5.
Unstable voltage either on no-load or with load	1. Check speed stability. 2. Check stability setting. Refer to subsection 4.6.
High voltage either on no-load or with load	1. Check speed. 2. Check that generator load is not capacitive (leading power factor).
Low voltage no-load	1. Check speed. 2. Check link 1-2 or external hand trimmer leads for continuity.
Low voltage on-load	1. Check speed. 2. Check UFRO setting. Refer to subsection 4.7.1.1. 3. Follow separate excitation procedure to check generator and AVR. Refer to subsection 7.5.

Table 7

7.4.2 SX421 AVR - FAULT FINDING

No voltage build-up when starting set	1. Check circuit breaker ON. Refer to subsection 6.4.1. 2. Check speed. 3. Check residual voltage. Refer to subsection 7.4.5. 4. Follow separate excitation test procedure to check generator and AVR. Refer to subsection 7.5.
Unstable voltage either on no-load or with load	1. Check speed stability. 2. Check stability setting. Refer to subsection 4.6.
High voltage either on no-load or with load	1. Check speed. 2. Check link 1-2 or external hand trimmer leads for continuity. Check continuity of leads 7-8 and P3-P2 for continuity. 3. Check that generator load is not capacitive (leading power factor).
Low voltage no-load	1. Check speed. 2. Check link 1-2 or external hand trimmer leads for continuity.
Low voltage on-load	1. Check speed. 2. Check UFRO setting. Refer to subsection 4.7.1.1. 3. Follow separate excitation procedure to check generator and AVR. Refer to subsection 7.5.
Excessive voltage/speed dip on load switching	1. Check governor response. 2. Refer to generating set manual. Check 'DIP' setting. Refer to subsection 4.7.1.4.

Table 8

Katolight Service - Master Repair Manual - Page 1003

7.4.3 MX341 AVR - FAULT FINDING

No voltage build-up when starting set	1. Check link K1-K2 on auxiliary terminals. 2. Follow Separate Excitation Test Procedure to check machine and AVR. Refer to subsection 7.5.
Loss of voltage when set running	1. First stop and re-start set. If no voltage or voltage collapses after short time, follow Separate Excitation Test Procedure. Refer to subsection 7.5.
Generator voltage high followed by collapse	1. Check sensing leads to AVR. 2. Refer to Separate Excitation Test Procedure. Refer to subsection 7.5.
Voltage unstable, either on no-load or with load	1. Check speed stability. 2. Check "STAB" setting. Refer to Load Testing section for procedure. Refer to subsection 4.6.
Low voltage on-load	1. Check speed. 2. If correct check "UFRO" setting. Refer to subsection 4.7.1.1.
Excessive voltage/speed dip on load switching	1. Check governor response. Refer to generating set manual. Check "DIP" setting. Refer to subsection 4.7.1.4.
Sluggish recovery on load switching	1. Check governor response. Refer to generating set manual.

Table 9

7.4.4 MX321 AVR - FAULT FINDING

No voltage build-up when starting set	1. Check link K1-K2 on auxiliary terminals. Follow Separate Excitation Test Procedure to check machine and AVR. Refer to subsection 7.5.
Voltage very slow to build up	1. Check setting of ramp potentiometer. Refer to 4.7.1.5
Loss of voltage when set running	1. First stop and re-start set. If no voltage or voltage collapses after short time, follow Separate Excitation Test Procedure. Refer to subsection 7.5.
Generator voltage high followed by collapse	1. Check sensing leads to AVR. 2. Refer to Separate Excitation Test Procedure. Refer to subsection 7.5.
Voltage unstable, either on no-load or with load	1. Check speed stability. 2. Check "STAB" setting. Refer to Load Testing section for procedure. Refer to subsection 4.6.
Low voltage on-load	1. Check speed. 2. If correct check "UFRO" setting. Refer to subsection 4.7.1.1.
Excessive voltage/speed dip on load switching	1. Check governor response. Refer to generating set manual. Check "DIP" setting. Refer to subsection 4.7.1.4.
Sluggish recovery on load switching	1. Check governor response. Refer to generating set manual. Check "DWELL" setting. Refer to Load Testing section 4.7.1.4.

Table 10

7.4.5 RESIDUAL VOLTAGE CHECK

This procedure is applicable to generators with either SX460 or SX440 or SX421 AVR.

With the generator set stationary remove AVR access cover and disconnect leads X and XX from the AVR.

Start the set and measure voltage across AVR terminals P2-P3 on SX440 or SX421 AVR.

Stop the set, and replace leads X and XX on the AVR terminals.If the measured voltage was above 5V the generator should operate normally.

If the measured voltage was under 5V follow the procedure below.

7.4.6 'REFLASHING' TO RESTORE RESIDUAL

Using a 12 volt dc battery as a supply clip leads from battery negative to AVR terminal XX, and from battery positive through a diode to AVR terminal X. See Fig. 7.

Important ! A diode must be used as shown below to ensure the AVR is not damaged.

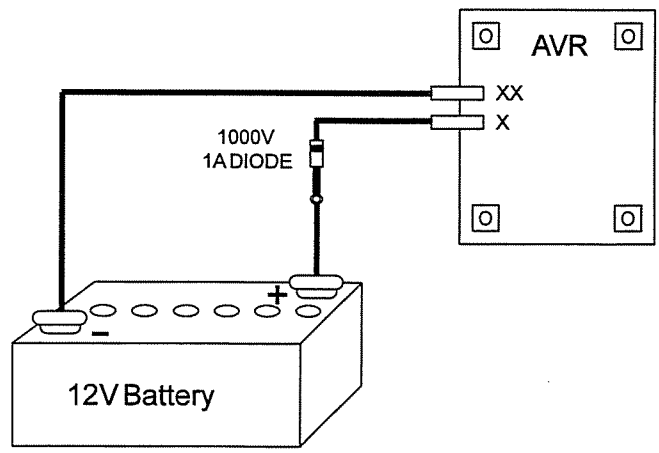

Fig. 7

Important ! If the generating set battery is used for field flashing, the generator main stator neutral must be disconnected from earth.

Restart the set and note output voltage from main stator, which should be approximately nominal voltage, or voltage at AVR terminals P2-P3 on SX440 or SX421 which should be between 170 and 250 volts.

Stop the set and unclip battery supply from terminals X and XX. Restart the set. The generator should now operate normally. If no voltage build-up is obtained it can be assumed a fault exists in either the generator or the AVR circuits. Follow the SEPARATE EXCITATION TEST PROCEDURE to check generator windings, rotating diodes and AVR. Refer to subsection 7.5.

7.5 SEPARATE EXCITATION TEST PROCEDURE

The generator windings, diode assembly and AVR can be checked using the appropriate following section.

7.5.1 GENERATOR WINDINGS, ROTATING DIODES and PERMANENT MAGNET GENERATOR (PMG)
7.5.2 EXCITATION CONTROL TEST.

7.5.1 GENERATOR WINDINGS, ROTATING DIODES and PERMANENT MAGNET GENERATOR (PMG)

Important ! **The resistances quoted apply to a standard winding. For generators having windings or voltages other than those specified refer to factory for details. Ensure all disconnected leads are isolated and free from earth.**

Important ! **Incorrect speed setting will give proportional error in voltage output.**

CHECKING PMG

Start the set and run at rated speed.

Measure the voltages at the AVR terminals P2, P3 and P4. These should be balanced and within the following ranges:-

50Hz generators - 170-180 volts
60Hz generators - 200-216 volts

Should the voltages be unbalanced stop the set, remove the PMG sheet metal cover from the non drive endbracket and disconnect the multipin plug in the PMG output leads. Check leads P2, P3, P4 for continuity. Check the PMG stator resistances between output leads. These should be balanced and within
+/-10% of 2.3 ohms. If resistances are unbalanced and/or incorrect the PMG stator must be replaced. If the voltages are balanced but low and the PMG stator winding resistances are correct - the PMG rotor must be replaced.

CHECKING GENERATOR WINDINGS AND ROTATING DIODES

This procedure is carried out with leads X and XX disconnected at the AVR or transformer control rectifier bridge and using a 12 volt d.c. supply to leads X and XX.

Start the set and run at rated speed.

Measure the voltages at the main output terminals U, V and W. If voltages are balanced and within +/-10% of the generator nominal voltage, refer to 7.5.1.1.

Check voltages at AVR terminals 6, 7 and 8. These should be balanced and between 170-250 volts.

If voltages at main terminals are balanced but voltage at 6, 7 and 8 are unbalanced, check continuity of leads 6, 7 and 8. Where an isolating transformer is fitted (MX321 AVR) check transformer windings. If faulty the transformer unit must be replaced.

If voltages are unbalanced, refer to 7.5.1.2.

7.5.1.1 BALANCED MAIN TERMINAL VOLTAGES

If all voltages are balanced within 1% at the main terminals, it can be assumed that all exciter windings, main windings and main rotating diodes are in good order, and the fault is in the AVR or transformer control. Refer to subsection 7.5.2 for test procedure.
If voltages are balanced but low, there is a fault in the main excitation windings or rotating diode assembly. Proceed as follows to identify:-

Rectifier Diodes

The diodes on the main rectifier assembly can be checked with a multimeter. The flexible leads connected to each diode should be disconnected at the terminal end, and the forward and reverse resistance checked. A healthy diode will indicate a very high resistance (infinity) in the reverse direction, and a low resistance in the forward direction. A faulty diode will give a full deflection reading in both directions with the test meter on the 10,000 ohms scale, or an infinity reading in both directions.
On an electronic digital meter a healthy diode will give a low reading in one direction, and a high reading in the other.

Replacement of Faulty Diodes

The rectifier assembly is split into two plates, the positive and negative, and the main rotor is connected across these plates. Each plate carries 3 diodes, the negative plate carrying negative biased diodes and the positive plate carrying positive biased diodes. Care must be taken to ensure that the correct polarity diodes are fitted to each respective plate. When fitting the diodes to the plates they must be tight enough to ensure a good mechanical and electrical contact, but should not be overtightened. The recommended torque tightening is 4.06 - 4.74Nm (36-42lb in).

Surge Suppressor

The surge suppressor is a metal-oxide varistor connected across the two rectifier plates to prevent high transient reverse voltages in the field winding from damaging the diodes. This device is not polarised and will show a virtually infinite reading in both directions with an ordinary resistance meter. If defective this will be visible by inspection, since it will normally fail to short circuit and show signs of disintegration. Replace if faulty.

Main Excitation Windings

If after establishing and correcting any fault on the rectifier assembly the output is still low when separately excited, then the main rotor, exciter stator and exciter rotor winding resistances should be checked (see Resistance Charts), as the fault must be in one of these windings. The exciter stator resistance is measured across leads X and XX. The exciter rotor is connected to six studs which also carry the diode lead terminals. The main rotor winding is connected across the two rectifier plates. The respective leads must be disconnected before taking the readings.

Resistance values should be within +/-10% of the values given in the tables below:-

4 POLE GENERATORS			
FRAME SIZE	MAIN ROTOR	EXCITER STATOR	EXCITER ROTOR
4 - 4C	0.91	18	0.136
4 - 4D	1.04	18	0.136
4 - 4E	1.17	18	0.136
4 - 4F	1.35	18	0.136
5 - 4C	1.55	17	0.184
5 - 4D	1.77	17	0.184
5 - 4E	1.96	17	0.184
5 - 4F	2.16	17	0.184
6 - 4G	1.75	17	0.158
6 - 4H	1.88	17	0.158
6 - 4J	2.09	17	0.158
6 - 4K	2.36	17	0.158
7 - 4E	1.27	17	0.096
7 - 4F	1.41	17	0.096
7 - 4G	1.65	17	0.096
7 - 4H	1.77	17	0.096

Table 11

6 POLE GENERATORS			
FRAME SIZE	MAIN ROTOR	EXCITER STATOR	EXCITER ROTOR
6 - 6G	1.12	17	0.2
6 - 6H	1.33	17	0.2
6 - 6J	1.5	17	0.2
6 - 6K	1.75	17	0.2
7 - 6E	2.33	17	0.2
7 - 6F	2.83	17	0.2
7 - 6G	3.25	20	0.28

Table 12

7.5.1.2 UNBALANCED MAIN TERMINAL VOLTAGES

If voltages are unbalanced, this indicates a fault on the main stator winding or main cables to the circuit breaker. NOTE: Faults on the stator winding or cables may also cause noticeable load increase on the engine when excitation is applied. Disconnect the main cables and separate the winding leads U1-U2, (U5-U6), V1-V2, (V5-V6), W1-W2, (W5-W6) to isolate each winding section.

Note:- leads suffixed 5 and 6 apply to 12 wire windings only.

Measure each section resistance - values should be balanced and within +/-10% of the value given below:-

MAIN STATOR SECTION RESISTANCES				
4 POLE GENERATORS				
SECTION RESISTANCES				
FRAME SIZE	WINDING 311 1-2 OR 5-6	WINDING 12 1-2	WINDING 17 1-2 OR 5-6	WINDING 07 1-2
4 - 4C	0.0085	N/A	0.0115	N/A
4 - 4D	0.006	N/A	0.01	N/A
4 - 4E	0.0045	N/A	0.0075	N/A
4 - 4F	0.0037	N\A	0.0055	N/A
5 - 4C	0.0032	N/A	0.0053	N/A
5 - 4D	0.0024	N/A	0.004	N/A
5 - 4E	0.0022	N/A	0.0034	N/A
5 - 4F	0.0019	N/A	0.0025	N/A
6 - 4G	0.0017	0.0034	N/A	0.0055
6 - 4H	0.0013	0.0025	N/A	0.0036
6 - 4J	0.0011	0.0022	N/A	0.003
6 - 4K	0.0085	0.0017	N/A	0.0026
7 - 4E	N/A	0.0016	N/A	0.0026
7 - 4F	N/A	0.0013	N/A	0.002
7 - 4G	N/A	0.0009	N/A	0.0015
7 - 4H	N/A	0.0008	N/A	0.0011

Table 13

6 POLE GENERATORS				
SECTION RESISTANCES				
FRAME SIZE	WINDING 311 1-2 OR 5-6	WINDING 12 1-2	WINDING 17	WINDING 07 1-2
6 - 6G	0.0045	0.009	N/A	0.015
6 - 6H	0.0032	0.0063	N/A	0.01
6 - 6J	N/A	0.0049	N/A	0.007
6 - 6K	0.002	0.0039	N/A	0.006
7 - 6E	N/A	0.0027	N/A	0.0042
7 - 6F	N/A	0.0018	N/A	0.0032
7 - 6G	N/A	0.0014	N/A	0.002

Table 14

Measure insulation resistance between sections and each section to earth.

Unbalanced or incorrect winding resistances and/or low insulation resistances to earth indicate rewinding of the stator will be necessary. Refer to removal and replacement of component assemblies subsection 7.5.3.

7.5.2 EXCITATION CONTROL TEST

7.5.2.1 AVR FUNCTION TEST

All types of AVR's can be tested with this procedure:

1. Remove exciter field leads X & XX (F1 & F2) from the AVR terminals X & XX (F1 & F2).
2. Connect a 60W 240V household lamp to AVR terminals X & XX (F1 & F2).
3. Set the AVR VOLTS control potentiometer fully clockwise.
4. Connect a 12V, 1.0A DC supply to the exciter field leads X & XX (F1 & F2) with X (F1) to the positive.
5. Start the generating set and run at rated speed.
6. Check that the generator output voltage is within +/- 10% of rated voltage.

Voltages at AVR terminals 7-8 on SX460 AVR or P2-P3 on SX440 or SX421 AVR should be between 170 and 250 volts. If the generator output voltage is correct but the voltage on 7-8 (or P2-P3) is low, check auxiliary leads and connections to main terminals.

Voltages at P2, P3, P4 terminals on MX341 and MX321 should be as given in 7.5.1.

The lamp connected across X-XX should glow. In the case of the SX460, SX440 and SX421 AVRs the lamp should glow continuously. In the case of the MX341 and MX321 AVRs the lamp should glow for approximately 8 secs. and then turn off. Failure to turn off indicates faulty protection circuit and the AVR should be replaced. Turning the "VOLTS" control potentiometer fully anti-clockwise should turn off the lamp with all AVR types.

Should the lamp fail to light the AVR is faulty and should be replaced.

Important ! After this test turn VOLTS control potentiometer fully anti-clockwise.

7.5.3 REMOVAL AND REPLACEMENT OF COMPONENT ASSEMBLIES

METRIC THREADS ARE USED THROUGHOUT

Caution! When lifting single bearing generators, care is needed to ensure the generator frame is kept in the horizontal plane. The rotor is free to move in the frame and can slide out if not correctly lifted. Incorrect lifting can cause serious injury to personnel.

7.5.3.1 ANTI-CONDENSATION HEATERS



Danger ! The external mains electricity supply used to power the anti-condensation heater must be switched off and safely isolated before attempting any work adjacent to the heater, or removal of the non drive end endbracket on which the anti-con heater is mounted. Ensure that the engine is inhibited prior to work in generator.

7.5.3.2 REMOVAL OF PERMANENT MAGNET GENERATOR (PMG)

1. Remove access cover.
2. Disconnect P2, P3, P4 at the multiway connector inside the access cover.
3. Remove the 4 screws and clamps retaining the stator housing (Frames 4, 5 and 6) or the stator pack (Frame 7).
4. Tap the stator pack or housing out of its spigot.

NOTE:
As the highly magnetic rotor will attract the stator core, care must be taken to avoid a contact which may damage the winding.

5. Remove the exciter rotor securing bolt and stow safely and firmly pull the complete rotor assembly from its location.

N.B. Keep the rotor clean and avoid contact with metal dust or particles - preferably place in plastic bag.

Important ! The rotor assembly must not be dismantled.

Re-assembly is a reversal of the above procedure having due regard for the notes below:-

1. Ensure rotor magnet assembly is free of metal pieces or particles.
2. Care is needed to avoid winding damage when re-assembling the stator pack, due to strong magnetic attraction.

7.5.3.3 REMOVAL OF BEARINGS

Important ! Position the main rotor so that a full pole face of the main rotor core is at the bottom Remove PMG of the stator bore if fitted.

The generators in this manual will be fitted with one of three different bearing arrangements. There may be two different arrangements on a two-bearing generator. (See table 14 & 15)

BEARING OPTIONS FOR DRIVE-END BEARINGS				
	HC4	HC5	HC6	HC7
Reagreasable bearings	N/A	OPT	OPT	STD
Sealed for life with a cartridge	STD	STD	STD	N/A
Sealed for life without cartridge	N/A	N/A	N/A	N/A

Table 15

BEARING OPTIONS FOR NON DRIVE-END BEARINGS				
	HC4	HC5	HC6	HC7
Reagreasable bearings	N/A	OPT	OPT	STD
Sealed for life with a cartridge	NA	NA	STD	N/A
Sealed for life without cartridge	STD	STD	N/A	N/A

Table 16

Removal of the bearings may be effected either after the rotor assembly has been removed or more simply by removal of endbracket(s).

Be sure to note the location of all components during removal to assist during the assembly process.

BEARING REPLACEMENT

Environment

Every effort must be made to establish a clean area around the generator when removing and replacing bearings. Contamination is a major cause of bearing failures.

Equipment

Suitable cleaning solvent
Bearing puller, two or three leg
Thin protective gloves
Lint free cleaning cloth
Induction heater.

Preparation

Remove PMG if fitted
Remove the lubrication pipework if fitted
Position the rotor so that the full pole face of the main rotor is at the bottom of the stator bore.
Remove the end bracket, see 7.5.3.4 for procedure.

NOTES:

- It is not necessary to remove the rotor.
- Ensure that the bearing contact surfaces shows no sign of wear or corrosion prior to fitting the bearing.
- Never refit used bearings, wave washers or 'O'rings.
- Never refit used bearings, grease flingers, wave washer or 'O' rings.
- Only the outer race should be used to transmit load during assembly (NEVER use the inner race).

REMOVAL OF REGREASABLE BEARINGS

The bearings are a press fit on the shaft and can be removed with standard tooling, i.e. 2 or 3 legged manual or hydraulic bearing pullers.

To remove bearings proceed as follows:

1. Remove 4 screws holding bearing cap.
2. Remove cap.
3. Non drive end - remove wave washer and circlip (single bearing only).
4. Remove bearing cartridge housing complete with bearing (and grease flinger if fitted).
5. Remove bearing from cartridge.
6. Discard the old bearing 'O' rings and wave washer where fitted.

The bearing cap(s) and cartridge(s) must be thoroughly flushed out with clean solvent and checked for wear or damage, before re-assembly. Damaged components should be replaced before refitting the bearing.

ASSEMBLY OF REGREASABLE BEARINGS

NOTE: Gloves must be worn at all times when handling the bearings, grease and solvent.

1. Wipe clean the assembly surface, using cleaning solvent on lint free cloth.
2. Wipe clean: Bearing Cartridge, Wave Washer, Bearing Cap, grease flinger, all re-lubrication pipes and fittings (internal and external). Visually inspect all components after cleaning, for contamination.
3. Place all components on the clean assembly surface. Do not use an air line to blow off excess fluid.
4. Thoroughly clean the external surface of the grease gun nozzle using lint free cloth.

Bearing preparation

1. Remove the bearing from its packaging.
2. Wipe off the preservative oil from the surface of the inner and outer rings - using lint free cloth only.
3. Place the bearing on the clean assembly surface, with the bearing designation marking facing down.

Bearing Assembly (Lubrication, see TABLE 17)

Cartridge:

1. Apply the specified cartridge grease fill quantity to the back face of the bearing housing.
2. Apply a small amount of grease to the grooved sealing surface in the cartridge.
3. Apply anti-fretting lubricant (MP14002 - Klüber Altemp Q NB 50) to the bearing housing circumference. Apply paste in a thin coherent layer by use of a lint free cloth (DO NOT rub in) (use clean protective gloves).
4. Non-drive end - fit new 'O' Rings into the 'O' Ring grooves in the bearing housing circumference.

Bearing:

1. Apply half the specified bearing grease fill quantity (see table 16) to the upper face of the bearing (opposite side to the bearing designation markings).
2. Thumb the applied grease into the bearing, ensuring good penetration into the raceways/balls (use clean protective gloves).

Assemble Bearing into Cartridge

1. Heat the bearing cartridge to 25° C above ambient with an induction heater (Do not exceed 100°C).
2. With greased face of the bearing facing the cartridge bore, assemble the bearing into the bearing housing. Ensure the bearing outer race contacts the location shoulder.

Assemble Bearing onto Shaft

Bearing Cartridge

1. Heat the Bearing and Cartridge assembly to 80ºC above ambient with an induction heater. (use induction heater, no other heat source is suitable)

2. Slide the Bearing and Cartridge assembly over the shaft, pushing it firmly against the bearing seating shoulder.

3. Rotate the assembly (including inner race) 45º in either direction, to provide correct alignment. The bearing must be held firmly in place until it is cool enough to positively self locate.

NOTE: Ensure cartridge is at ambient temp. before assembling bracket.

Cap/Flinger:

Apply the specified cap grease fill quantity to the inside face of the cap (see table 16).

1. Fill the grease exhaust slot with grease.

2. Apply a small amount of grease to the grooved sealing surface in the cap.

3. Fit circlip. (single bearing only).

4. Heat flinger to 120°C and place on shaft up to the bearing inner race. Hold firmly until positively located.

5. Place wave washer in cap, fit cap to bearing cartridge.

Re-lubrication pipe:

1. Fill pipe and grease nipple with grease.

2. Fit pipe work to machine.

INITIAL LUBRICATION DETAILS, REGREASEABLE BEARINGS							
FRAME	BEARING POSITION	GREASE QUANTITY					
		BEARINGS		CARTRIDGE		CAP	
		CM^3	GRAMS	CM^3	GRAMS	CM^3	GRAMS
5	Non-Drive End	65	58	33	29	33	29
5	Drive End	92	82	46	41	46	41
6	Non-Drive End	121	111	63	56	63	56
6	Drive End	156	139	78	69	78	69
7	Non-Drive End	174	154	87	77	87	77
7	Drive End	208	185	104	92	104	92

Lubricant: Kluber Asonic GHY 72

Table 17

REMOVAL OF GREASED FOR LIFE BEARINGS WITH BEARING CARTRIDGE

The bearings are a press fit on the shaft and can be removed with standard tooling, i.e. 2 or 3 legged manual or hydraulic bearing pullers.

To remove bearings proceed as follows:

1. Remove 4 screws holding bearing cap.

2. Remove cap.

3. Non drive end - remove wave washer and circlip (single bearing only).

4. Remove bearing cartridge housing complete with bearing.

5. Remove bearing from cartridge.

6. Discard the old bearing, 'o' rings and wave washer where fitted.

The bearing cap(s) and cartridge(s) must be thoroughly flushed out with clean solvent and checked for wear or damage, before re-assembly. Damaged components should be replaced before refitting the bearing.

ASSEMBLY OF SEALED FOR LIFE BEARINGS WITH CARTRIDGE

Pre-assembly cleaning.

NOTE: Gloves must be worn at all times when handling the bearings, grease and solvent.

1. Wipe clean the assembly surface, using cleaning solvent on lint free cloth.

2. Wipe clean: Bearing Cartridge and Bearing Cap (internal and external). Visually inspect all components after cleaning, for contamination.

3. Place all components on a clean assembly surface. Do not use an air line to blow off excess fluid.

4. Thoroughly clean the external surface of the grease gun nozzle using lint free cloth.

Bearing preparation:

1. Remove the bearing from its packaging.

2. Wipe off the preservative oil from the surface of the inner and outer rings - using lint free cloth only.

3. Place the bearing on the clean assembly surface, with the bearing designation marking facing down.

Bearing Assembly

Cartridge:

1. Apply anti-fretting lubricant (**MP14002 - Klüber Altemp Q NB 50**) to the bearing housing circumference. Apply paste in a thin coherent layer by use of a lint free cloth (**DO NOT rub in**) (use clean protective gloves).

2. Fit 'O' Rings into the 'O' Ring grooves in the bearing housing circumference.

Assemble Bearing into Cartridge

1. Heat the bearing cartridge to 25° C above the ambient temperature (with an induction heater, do not exceed 100°C) and assemble the new bearing into the cartridge. Ensure that the bearing designation is visible after assembly.

2. With greased face of the bearing facing the cartridge bore, assemble the bearing into the bearing housing. Ensure the bearing outer race contacts the location shoulder.

NOTE: Only the outer race should be used to transmit load during assembly (NEVER use the inner race).

Assemble Bearing and Cartridge onto the Shaft

1. Heat the Bearing and Cartridge assembly to 80ºC above ambient.
   (use induction heater, no other heat source is suitable)

2. Slide the Bearing and Cartridge assembly over the shaft, pushing it firmly against the bearing seating shoulder.

3. Rotate the assembly (including inner race) 45º in either direction, to provide correct alignment. The bearing must be held firmly in place until it is cool enough to positively self locate.

4. Non drive end only - fit circlip (single bearing only) and wave washer.

5. Fit the bearing cap.

6. Rotate the bearing assembly on the shaft to check for free movement.

Note: Ensure cartridge is at ambient temp. before assembling bracket.

7. Refit the end bracket and PMG where fitted.

SEALED FOR LIFE BEARINGS (WITHOUT CARTRIDGE)

NOTE: Prior to commencement of removal of end bracket ensure rotor is positioned with full pole face at the bottom of the stator bore.

Preparation

1. Remove terminal box lid.

2. Cut cable ties and disconnect exciter leads.

3. Remove bolts from NDE terminal panel and place panel over terminal board with AVR still connected.

4. Remove Permanent Magnet Generator (if fitted) see 7.5.3.2.

5. Remove the rotor retaining circlip (Non drive end - single bearing only) and slack off remaining NDE bracket bolts.

6. Fit 2 off M10x60mm bolts into jacking locations on centre line and replace 2 bolts into end bracket for support as end bracket is removed (be aware of exciter lead and PMG lead, if fitted).

7. If alternator not connected to engine be aware of rotor pulling through stator, to avoid this, place wooden spacer between fan and frame each side at drive end.

8. Use available lifting equipment to remove the bracket.

9. Remove bearing circlip (Non drive end - single bearing only).

BEARING REMOVAL

1. Fit pulley drawers and draw off bearing, ensuring to protect the threaded hole in the end of the main shaft.

2. Heat the Bearing to 80ºC above ambient with an induction heater and fit to shaft. (use induction heater, no other heat source is suitable do not exceed 100°C) (ensure shaft and bearing are clean prior to assembly)

3. Replace the bearing circlip (single bearing only).

Replace the Endbracket

1. Remove jacking bolts from end bracket and lift end bracket into position and fit bracket onto bearing (heat bracket if required). Ensure exciter and PMG leads are pulled through and positioned.

2. Lift rotor to align exciter (use piece of wood as lever under shaft through NDE aperture) fit bolts and secure evenly around end bracket to ensure it is correctly aligned.

3. Replace rotor retaining circlip and permanent magnet assembly if fitted, and replace cover.

4. Connect exciter and re-tie all cables into position and re-assemble terminal box.

NOTE: Prior to re-fitting end bracket check exciter electrically and physically to ensure no damaged caused when dismantling.

7.5.3.4 MAIN ROTOR ASSEMBLY

SINGLE BEARING MACHINE

NOTE: On single bearing machines, before removal from, or re-assembly to the prime mover, position the rotor, if possible, such that a full pole face is at bottom dead centre.

1. Remove all access covers and terminal box lid.
2. Disconnect exciter leads X and XX and PMG leads P2-P3-P4 at the auxiliary terminals inside the terminal box.
3. Ensure that these leads are free to come away with the non drive endbracket when removed.
4. Remove the 8 bolts holding the drive end adaptor to the frame.
5. With a rope sling around drive end adaptor, tap adaptor out of its spigot location; guide over fan and remove.
6. If the generator is fitted with a cartridge. Remove the 4 bolts retaining the non drive end bearing cartridge in the non drive end endbracket (outer 4 bolts). (This includes all regreasable options).
7. Remove the 8 bolts securing the non drive end bracket to the frame.
8. Supporting the non drive end bracket with a hoist, insert two M10 bolts in the two holes provided for 'jacking' purposes (on the end bracket horizontal centre line). Screw in the bolts until the end bracket spigot is clear of the locating recess, lower the whole assembly until the main rotor is resting in the stator bore. Still supporting the non drive end bracket, tap the bracket off the non drive end bearing cartridge (taking care that the exciter stator does not foul exciter rotor windings) and remove.
9. To withdraw the rotor from the stator the rotor must be supported by a rope at the drive end and eased out of the stator core until half the main rotor is protruding out of the stator. At this point it is safe to release the weight from the rope sling.
10. Tightly bind a rope sling around the rotor core, and supporting the non drive end of the rotor, guide it clear of the stator.



Warning!

The rope sling may not be at the centre of gravity of the rotor and guidance at the ends of the rotor is essential. THE FULL WEIGHT OF THE ROTOR GIVEN IN THE TABLE BELOW MUST BE SUPPORTED BY THE CRANE AND SLING. If the rotor core is allowed to drop more than a few millimetres at this point, it will make contact with the stator windings and may damage them.

MINIMUM ROTOR ASSEMBLY WEIGHTS

FRAME	WEIGHT
4 - 4 pole	473 kgs
5 - 4 pole	685 kgs
6 - 4 pole	1093 kgs
6 - 6 pole	1050 kgs
7 - 4 pole	1592 kgs
7 - 6 pole	1790 kgs

Re-assembly is a reversal of the above procedure.

Before assembly of a single bearing rotor into stator housing check that the drive discs are not damaged or cracked or showing any other signs of fatigue. Also check that holes in the discs for drive fixing screws are not elongated.

Damaged components must be replaced.

When refitting discs ensure that the number and thickness of discs, and the tightening torque of hub bolts is in accordance with the table below.

Refer to engine manual for torque setting of disc to flywheel bolts.

FRAME	NO. OF DISCS	SINGLE DISC THICKNESS	TOTAL THICKNESS	TIGHTENING TORQUE
4	4	1.2	4.8	48kgm
				479Nm
5	4	1.2	4.8	48kgm
				479Nm
6	6	1.2	7.2	84kgm
				822Nm
7	6	1.2	7.2	84kgm
				822Nm

Table 18

TWO BEARING MACHINES

NOTE:

Position rotor, if possible, such that a full pole face is at bottom dead centre.

The procedure for removal of a two bearing rotor is similar to that outlined for single bearing machines with the exception of Steps 4 and 5 relating to the drive end adaptor.

For removal of this item proceed as follows:-

1. Remove the 8 bolts holding drive end adaptor to frame and 4 bolts retaining bearing cartridge in drive end bracket (outer 4 bolts), if fitted.
2. With rope sling around the shaft extension, supporting the rotor weight tap the drive end bracket spigot out of its locating recess and lower rotor assembly to rest in the stator bore.
3. Take the weight of the drive end bracket on the sling and tap the bracket off the drive end bearing cartridge, guide over the fan and remove.

Re-assembly is a reversal of the above procedure.

7.6 RETURNING TO SERVICE

After rectification of any faults found, remove all test connections and reconnect all control system leads.

Restart the set and adjust VOLTS control potentiometer on AVR by slowly turning clockwise until rated voltage is obtained.

Refit all terminal box covers/access covers and reconnect heater supply.

Caution !	**Failure to refit all guards, access covers and terminal box covers can result in personal injury or death.**

7.7 MAINTENANCE

Re-lubrication

1. Ensure grease gun nozzle and re-lubrication nipple are free from contaminants or abrasive material.

2. Apply the specified re-lubrication grease fill quantity (see table below) via the grease nipple.

3. Run the machine for 10 minutes to allow excess grease to exhaust.

Check inside the non-drive end PMG cover for expelled grease. Clean out as necessary.

RELUBRICATION DETAILS FOR REGREASABLE BEARINGS				
HC/HCK	BEARING POSITION	GREASE QUANTITY		RELUBRICATION PERIOD
		CM3	GRAMS	
5	Non-Drive End	33	29	4,500 Hrs
5	Drive End	46	41	4,500 Hrs
6	Non-Drive End	60	53	4,500 Hrs
6	Drive End	75	66	4,500 Hrs
7	Non-Drive End	85	75	4,500 Hrs
7	Drive End	100	89	4,500 Hrs

Table 19

SECTION 8

SPARES AND AFTER SALES SERVICE

8.1 RECOMMENDED SPARES

Service parts are conveniently packaged for easy identification. Genuine parts may be recognised by the Nupart name.

We recommend the following for Service and Maintenance. In critical applications a set of these service spares should be held with the generator.

1. **Diode Set (6 diodes with Surge Suppressors)**

HC4/5	**RSK5001**
HC6/7	**RSK6001**

2.

SX440 AVR	**E000-24030**
SX421 AVR	**E000-24210**
MX321 AVR	**E000-23212**
MX341 AVR	**E000-23412**

3. **Bearings**

PART NUMBERS NON DRIVE-END BEARINGS				
	HC4	**HC5**	**HC6**	**HC7**
Reagreasable bearings	N/A	OPT 051-01068	OPT 051-01065	STD 051-01063
Sealed for life with a cartridge	N/A	OPT 051-01068	STD 051-01070	N/A
Sealed for life without cartridge	STD 051-01072	STD 051-01072	N/A	N/A

Table 20

PART NUMBERS FOR DRIVE-END BEARINGS				
	HC4	**HC5**	**HC6**	**HC7**
Reagreasable bearings	N/A	OPT 051-01067	OPT 051-01064	STD 051-01062
Sealed for life with a cartridge	STD 051-01070	STD 051-01071	STD 051-01069	N/A
Sealed for life without cartridge	N/A	N/A	N/A	N/A

Table 21

When ordering parts the machine serial number or machine identity number and type should be quoted, together with the part description. For location of these numbers see paragraph 1.3.

Orders and enquiries for parts should be addressed to:

Newage International Ltd.,
Nupart Department,
P O Box 17, Barnack Road,
Stamford,
Lincolnshire
PE9 2NB
England.

Telephone: 44 (0) 1780 484000
Fax: 44 (0) 1780 766074

Website: www.newagestamford.com

or any of our subsidiary companies listed on the back cover.

8.2 AFTER SALES SERVICE

A full technical advice and on-site service facility is available from our Service Department at Stamford or through our subsidiary companies. A repair facility is also available at our Stamford Works.

Katolight Service - Master Repair Manual - Page 1013

This manual is available in the following languages on request:
English, French, German, Italian and Spanish.

Denne manual er til rådighed på følgende sprog: engelsk, fransk, tysk, italiensk og spansk.

Denne håndboken er tilgjengelig på de følgende språkene: engelsk, fransk, tysk, italiensk og spansk.

Sur simple demande, ce manuel vous sera fourni dans l'une des langues suivantes: anglais, français, allemand, italien, espagnol.

Dieses Handbuch ist auf Anfrage in den folgenden Sprachen erhältlich: Englisch, Französisch, Deutsch, Italienisch, Spanisch.

Deze handleiding is op verzoek leverbaar in de volgende talen: Engels, Frans, Duits, Italiaans, Spaans.

Este manual pode também ser obtido nas seguintes línguas: inglês, francês, alemão, italiano e espanhol.

Tämä käsikirja on saatavissa pyynnöstä seuraavilla kielillä: Englanti, ranska, saksa, italia, espanja.

Il presente manuale è disponibile, su richiesta, nelle seguenti lingue: inglese, francese, tedesco, italiano e spagnolo.

Este manual también puede solicitarse en los siguientes idiomas: inglés, francés, alemán, italiano e español.

Αυτό το εγχειρίδιο οδηγιών χρήσεως διατίθεται στις ακόλουθες γλώσσες κατόπιν αιτήσενς: Αγγλικά, Γαλλικά Γερμανικά, Ιταλικά, Ισπανικά.

A.C. GENERATOR WARRANTY

WARRANTY PERIOD

A.C. Generators

In respect of a.c. generators the Warranty Period is eighteen months from the date when the goods have been notified as ready for despatch by N.I. or twelve months from the date of first commissioning (whichever is the shorter period).

DEFECTS AFTER DELIVERY

We will make good by repair or, at our option, by the supply of a replacement, any fault which under proper use appears in the goods within the period specified above, and is found on examination by us to be solely due to defective material and workmanship; provided that the defective part is promptly returned, carriage paid, with all identification numbers and marks intact, to our works or, if appropriate to the Dealer who supplied the goods.

Any part repaired or replaced, under warranty, will be returned by N.I. free of charge (via sea freight if outside the UK).

We shall not be liable for any expenses which may be incurred in removing or replacing any part sent to us for inspection or in fitting any replacement supplied by us. We shall be under no liability for defects in any goods which have not been properly installed in accordance with N.I. recommended installation practices as detailed in the publications 'N.I. Installation, Service and Maintenance Manual' and 'N.I. Application Guidelines', or which have been improperly stored or which have been repaired, adjusted or altered by any person except ourselves or our authorised agents, or in any second-hand goods, proprietary articles or goods not of our own manufacture although supplied by us, such articles and goods being covered by the warranty (if any) given by the separate manufacturers.

Any claim under this clause must contain fully particulars of the alleged defect, the description of the goods, the date of purchase, and the name and address of the Vendor, the Serial Number (as shown on the manufacturers identification plate) or for Spares the order reference under which the goods were supplied.

Our judgement in all cases of claims shall be final and conclusive and the claimant shall accept our decision on all questions as to defects and the exchange of a part or parts.

Our liability shall be fully discharged by either repair or replacement as above, and in any event shall not exceed the current list price of the defective goods.

Our liability under this clause shall be in lieu of any warranty or condition implied by law as to the quality or fitness for any particular purpose of the goods, and save as expressly provided in this clause we shall not be under any liability, whether in contract, tort or otherwise, in respect of defects in goods delivered or for any injury, damages or loss resulting from such defects or from any work undone in connection therewith.

MACHINE SERIAL NUMBER

NEWAGE INTERNATIONAL LIMITED

REGISTERED OFFICE AND ADDRESS:
PO BOX 17
BARNACK ROAD
STAMFORD
LINCOLNSHIRE
PE9 2NB ENGLAND

Telephone: 44 (0) 1780 484000
Fax: 44 (0) 1780 484100
Web site: www.newagestamford.com

SUBSIDIARY COMPANIES

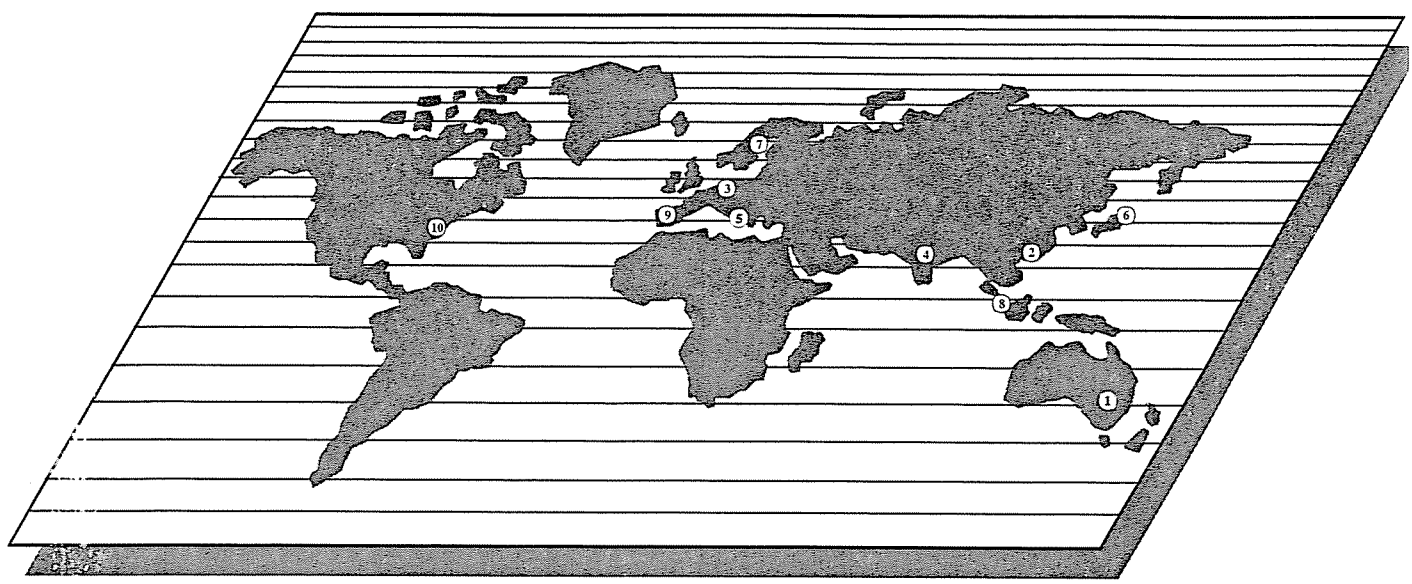

1 AUSTRALIA: NEWAGE ENGINEERS PTY. LIMITED
PO Box 6027, Baulkham Hills Business Centre,
Baulkham Hills NSW 2153.
Telephone: Sydney (61) 2 9680 2299
Fax: (61) 2 9680 1545

2 CHINA: WUXI NEWAGE ALTERNATORS LIMITED
Plot 49-A, Xiang Jiang Road
Wuxi High - Technical Industrial Dev. Zone
Wuxi, Jiangsu 214028
PR of China
Tel: (86) 510 5216212
Fax: (86) 510 5217673

3 GERMANY: NEWAGE ENGINEERS G.m.b.H.
Rotenbrückenweg 14, D-22113 Hamburg.
Telephone: Hamburg (49) 40 714 8750
Fax: (49) 40 714 87520

4 INDIA: C.G. NEWAGE ELECTRICAL LIMITED
C33 Midc, Ahmednagar 414111, Maharashtra.
Telephone: (91) 241 778224
Fax: (91) 241 777494

5 ITALY: NEWAGE ITALIA S.r.l.
Via Triboniano, 20156 Milan.
Telephone: Milan (39) 02 380 00714
Fax: (39) 02 380 03664

6 JAPAN: NEWAGE INTERNATIONAL JAPAN
8 - 5 - 302 Kashima
Hachioji-shi
Tokyo, 192-03
Telephone: (81) 426 77 2881
Fax: (81) 426 77 2884

7 NORWAY: NEWAGE NORGE A/S
Økern Naeringspark, Kabeigt. 5
Postboks 28, Økern, 0508 Oslo
Telephone: Oslo (47) 22 97 44 44
Fax: (47) 22 97 44 45

8 SINGAPORE: NEWAGE ASIA PACIFIC PTE LIMITED
10 Toh Guan Road #05-03
TT International Tradepark
Singapore 608838
Telephone: Singapore (65) 794 3730
Fax: (65) 898 9065
Telex: RS 33404 NEWAGE

9 SPAIN: STAMFORD IBERICA S.A.
Ctra. Fuenlabrada-Humanes, km.2
Poligono Industrial "Los Linares"
C/Pico de Almanzor, 2
E-28970 HUMANES DE MADRID (Madrid)
Telephone: Madrid (34) 91 604 8987/8928
Fax: (34) 91 604 81 66

10 U.S.A.: NEWAGE LIMITED
4700 Main St, N.E.
Fridley
Minnesota 55421
Telephone: (1) 800 367 2764
Fax: (1) 800 863 9243

© 2000 Newage International Limited.
Printed in England.

Publication No: UCH-027
26th Edition
7/99

STAMFORD

AC GENERATORS FROM
NEWAGE INTERNATIONAL

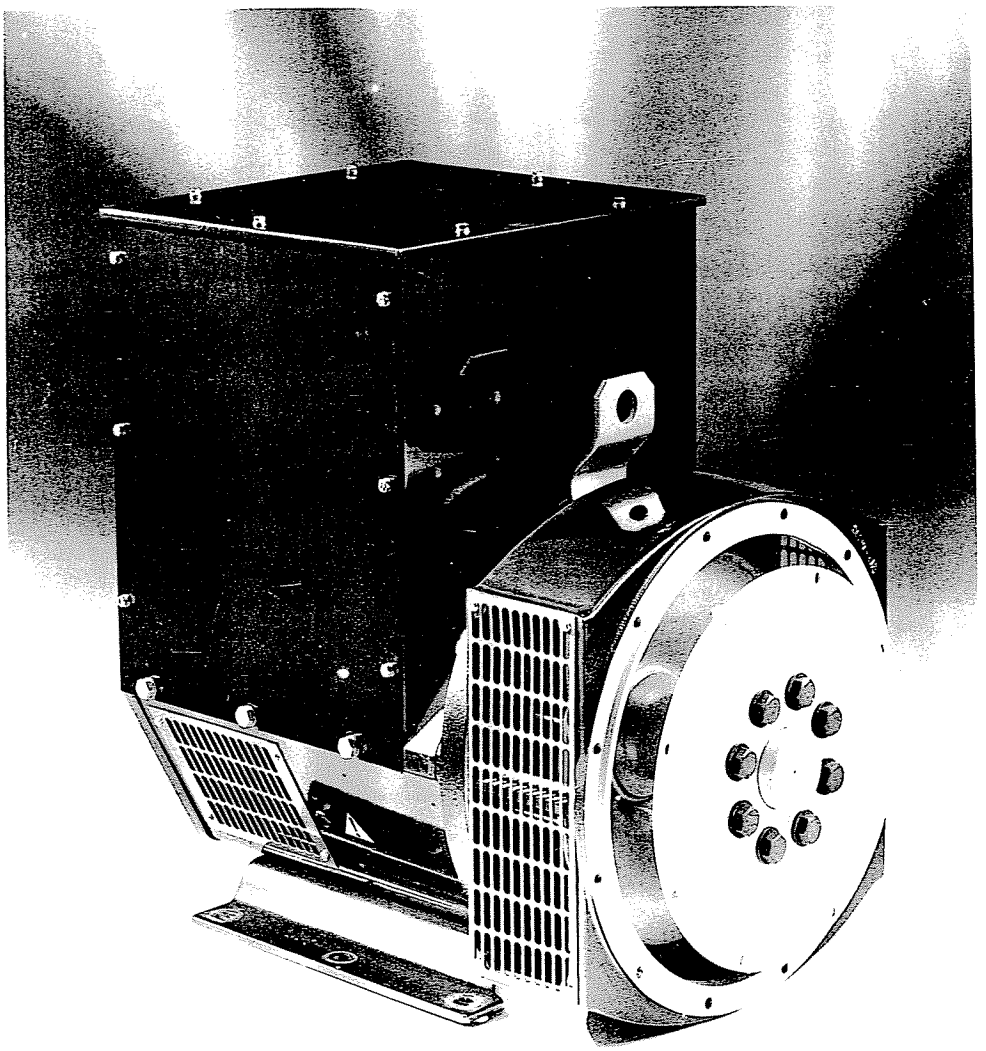

Installation, Service & Maintenance Manual

for AC generators with the following prefixes:

UCI; UCM; UCD 224 & 274 .

SAFETY PRECAUTIONS

Before operating the generating set, read the generating set operation manual and this generator manual and become familiar with it and the equipment.

SAFE AND EFFICIENT OPERATION CAN ONLY BE ACHIEVED IF THE EQUIPMENT IS CORRECTLY OPERATED AND MAINTAINED.

Many accidents occur because of failure to follow fundamental rules and precautions.

ELECTRICAL SHOCK CAN CAUSE SEVERE PERSONAL INJURY OR DEATH.

- Ensure installation meets all applicable safety and local electrical codes. Have all installations performed by a qualified electrician.
- Do not operate the generator with protective covers, access covers or terminal box covers removed.
- Disable engine starting circuits before carrying out maintenance.
- Disable closing circuits and/or place warning notices on any circuit breakers normally used for connection to the mains or other generators, to avoid accidental closure.

Observe all **IMPORTANT, CAUTION, WARNING,** and **DANGER** notices, defined as:

Important ! **Important refers to hazard or unsafe method or practice which can result in product damage or related equipment damage.**

Caution ! **Caution refers to hazard or unsafe method or practice which can result in product damage or personal injury.**



Warning !

Warning refers to a hazard or unsafe method or practice which CAN result in severe personal injury or possible death.



Danger !

Danger refers to immediate hazards which WILL result in severe personal injury or death.

Due to our policy of continuous improvement, details in this manual which were correct at time of printing, may now be due for amendment. Information included must therefore not be regarded as binding.

FOREWORD

The function of this book is to provide the user of the Stamford generator with an understanding of the principles of operation, the criteria for which the generator has been designed, and the installation and maintenance procedures. Specific areas where the lack of care or use of incorrect procedures could lead to equipment damage and/or personal injury are highlighted, with **WARNING** and/or **CAUTION** notes, and it is **IMPORTANT** that the contents of this book are read and understood before proceeding to fit or use the generator.

The Service, Sales and technical staff of Newage International are always ready to assist and reference to the company for advice is welcomed.

Warning ! **Incorrect installation, operation, servicing or replacement of parts can result in severe personal injury or death, and/or equipment damage. Service personnel must be qualified to perform electrical and mechanical service.**

EC DECLARATION OF INCORPORATION

All Stamford generators are supplied with a declaration of incorporation for the relevant EC legislation, typically in the form of a label as below.

EC DECLARATION OF INCORPORATION

IN ACCORDANCE WITH THE SUPPLY OF MACHINERY (SAFETY) REGULATIONS 1992 AND THE SUPPLY OF MACHINERY (SAFETY) (AMENDMENT) REGULATIONS 1994 IMPLEMENTING THE EC MACHINERY DIRECTIVE 89/392/EEC AS AMENDED BY 91/368/EEC.

THIS **STAMFORD A.C. GENERATOR** WAS MANUFACTURED BY OR ON BEHALF OF
NEWAGE INTERNATIONAL LTD
BARNACK ROAD STAMFORD LINCOLNSHIRE ENGLAND.

THIS COMPONENT MACHINERY MUST NOT BE PUT INTO SERVICE UNTIL THE MACHINERY INTO WHICH IT IS TO BE INCORPORATED HAS BEEN DECLARED IN CONFORMITY WITH THE PROVISIONS OF THE SUPPLY OF MACHINERY (SAFETY) REGULATIONS 1995/MACHINERY DIRECTIVE.

FOR AND ON BEHALF OF NEWAGE INTERNATIONAL LIMITED

NAME: LAWRENCE HAYDOCK
POSITION: TECHNICAL DIRECTOR
SIGNATURE:

THIS COMPONENT MACHINERY CARRIES THE CE MARK FOR COMPLIANCE WITH THE STATUTORY REQUIREMENTS FOR THE IMPLEMENTATION OF THE FOLLOWING DIRECTIVES

The EMC Directive 89/336/EEC
WARNING! This Component Machinery shall not be used in the Residential, Commercial and Light Industrial environment unless it also conforms to the relevant standard (EN 50081 - 1) REFER TO FACTORY FOR DETAILS

ii) The Low Voltage Directive 73/23/EEC as amended by 93/68/EEC

Under the EC Machinery Directive section 1.7.4. It is the responsibility of the generator set builder to ensure the generator identity is clearly displayed on the front cover of this book.

CE

ELECTROMAGNETIC COMPATIBILITY

Additional Information

European Union
Council Directive 89/336/EEC

For installations within the European Union, electrical products must meet the requirements of the above directive, and Newage ac generators are supplied on the basis that:

- They are to be used for power-generation or related function.
- They are to be applied in one of the following environments:

  Portable (open construction - temporary site supply)
  Portable (enclosed - temporary site supply)
  Containerised (temporary or permanent site supply)
  Ship-borne below decks (marine auxiliary power)
  Commercial vehicle (road transport / refrigeration etc)
  Rail transport (auxiliary power)
  Industrial vehicle (earthmoving, cranes etc)
  Fixed installation (industrial - factory / process plant)
  Fixed installation (residential, commercial and light industrial - home / office / health)
  Energy management (Combined heat and power and/or peak lopping)
  Alternative energy schemes

- The standard generators are designed to meet the 'industrial' emissions and immunity standards. Where the generator is required to meet the residential, commercial and light industrial emissions and immunity standards reference should be made to Newage document reference N4/X/011, as additional equipment may be required.
- The installation earthing scheme involves connection of the generator frame to the site protective earth conductor using a minimum practical lead length.
- Maintenance and servicing with anything other than factory supplied or authorised parts will invalidate any Newage liability for EMC compliance.
- Installation, maintenance and servicing is carried out by adequately trained personnel fully aware of the requirements of the relevant EC directives.

CONTENTS

SAFETY PRECAUTIONS			
FOREWORD			1
CONTENTS			2&3
SECTION 1		INTRODUCTION	4
	1.1	INTRODUCTION	4
	1.2	DESIGNATION	4
	1.3	SERIAL NUMBER LOCATION AND IDENTITY NUMBER LOCATION	4
	1.4	RATING PLATE AND CE MARKING	4
SECTION 2		PRINCIPLE OF OPERATION	5
	2.1	SELF-EXCITED AVR CONTROLLED GENERATORS	5
	2.2	PERMANENT MAGNET GENERATOR (PMG) EXCITED - AVR CONTROLLED GENERATORS	5
	2.3	AVR ACCESSORIES	5
	2.4	TRANSFORMER CONTROLLED GENERATORS	5
SECTION 3		APPLICATION OF THE GENERATOR	6
SECTION 4		INSTALLATION - PART 1	8
	4.1	LIFTING	8
	4.2	ASSEMBLY	8
	4.2.1	NO FOOT OPTION	8
	4.2.2	TWO BEARING GENERATORS	9
	4.2.3	SINGLE BEARING GENERATORS	9
	4.3	EARTHING	9
	4.4	PRE-RUNNING CHECKS	9
	4.4.1	INSULATION CHECK	9
	4.4.2	DIRECTION OF ROTATION	10
	4.4.3	VOLTAGE AND FREQUENCY	10
	4.4.4	AVR SETTINGS	10
	4.4.4.1	TYPE SX460 AVR	10
	4.4.4.2	TYPE SX440 AVR	10
	4.4.4.3	TYPE SX421 AVR	11
	4.4.4.4	TYPE MX341 AVR	11
	4.4.4.5	TYPE MX321 AVR	11
	4.4.5	TRANSFORMER CONTROLLED EXCITATION SYSTEM (Series 5)	12
	4.5	GENERATOR SET TESTING	12
	4.5.1	TEST METERING/CABLING	12
	4.6	INITIAL START-UP	12
	4.7	LOAD TESTING	13
	4.7.1	AVR CONTROLLED GENERATORS - AVR ADJUSTMENTS	13
	4.7.1.1	UFRO (Under Frequency Roll Off) (AVR Types SX460, SX440, SX421, MX341 and MX321)	13
	4.7.1.2	EXC TRIP (Excitation Trip)	14
	4.7.1.3	OVER/V (Over Voltage)	14
	4.7.1.4	TRANSIENT LOAD SWITCHING ADJUSTMENTS	14
	4.7.1.5	RAMP BUILD UP TIME	15
	4.7.2	TRANSFORMER CONTROLLED GENERATORS - TRANSFORMER ADJUSTMENT	15
	4.8	ACCESSORIES	15
SECTION 5		INSTALLATION - PART 2	16
	5.1	GENERAL	16
	5.2	GLANDING	16
	5.3	EARTHING	16
	5.4	PROTECTION	16
	5.5	COMMISSIONING	16

CONTENTS

SECTION 6		**ACCESSORIES**	**17**
	6.1	REMOTE VOLTAGE ADJUST (ALL AVR TYPES)	17
	6.2	PARALLEL OPERATION	17
	6.2.1	DROOP	17
	6.2.1.1	SETTING PROCEDURE	18
	6.2.2	ASTATIC CONTROL	18
	6.3	MANUAL VOLTAGE REGULATOR (MVR) - MX341 and MX321 AVR	18
	6.4	OVERVOLTAGE DE-EXCITATION BREAKER SX421 and MX321 AVR	18
	6.4.1	RESETTING THE BREAKER	19
	6.5	CURRENT LIMIT - MX321 AVR	19
	6.5.1	SETTING PROCEDURE	19
	6.6	POWER FACTOR CONTROLLER (PFC3)	20
SECTION 7		**SERVICE AND MAINTENANCE**	**21**
	7.1	WINDING CONDITION	21
	7.2	BEARINGS	22
	7.3	AIR FILTERS	22
	7.3.1	CLEANING PROCEDURE	22
	7.4	FAULT FINDING	22
	7.4.1	SX460 AVR - FAULT FINDING	22
	7.4.2	SX440 AVR - FAULT FINDING	23
	7.4.3	SX421 AVR - FAULT FINDING	23
	7.4.4	TRANSFORMER CONTROL - FAULT FINDING	23
	7.4.5	MX341 AVR - FAULT FINDING	24
	7.4.6	MX321 AVR - FAULT FINDING	24
	7.4.7	RESIDUAL VOLTAGE CHECK	25
	7.5	SEPARATE EXCITATION TEST PROCEDURE	25
	7.5.1	GENERATOR WINDINGS, ROTATING DIODES and PERMANENT MAGNET GENERATOR (PMG)	25
	7.5.1.1	BALANCED MAIN TERMINAL VOLTAGES	25
	7.5.1.2	UNBALANCED MAIN TERMINAL VOLTAGES	26
	7.5.2	EXCITATION CONTROL TEST	26
	7.5.2.1	AVR FUNCTION TEST	26
	7.5.2.2	TRANSFORMER CONTROL	27
	7.5.3	REMOVAL AND REPLACEMENT OF COMPONENT ASSEMBLIES	27
	7.5.3.1	REMOVAL OF PERMANENT MAGNET GENERATOR (PMG)	27
	7.5.3.2	REMOVAL OF BEARINGS	27
	7.5.3.3	REMOVAL OF ENDBRACKET AND EXCITER STATOR	27
	7.5.3.4	REMOVAL OF THE ROTOR ASSEMBLY	28
	7.6	RETURNING TO SERVICE	28
SECTION 8		**SPARES AND AFTER SALES SERVICE**	**29**
	8.1	RECOMMENDED SPARES	29
	8.2	AFTER SALES SERVICE	29
SECTION 9		**PARTS IDENTIFICATION**	**30**
		TYPICAL SINGLE BEARING GENERATOR (Fig. 11)	31
		TYPICAL TWO BEARING GENERATOR (Fig. 12)	33
		TYPICAL TWO BEARING (SERIES 5) GENERATOR (Fig. 13)	35
		ROTATING RECTIFIER ASSEMBLY (Fig. 14)	36

SECTION 1

INTRODUCTION

1.1 INTRODUCTION

The UC22/27 range of generators is of brushless rotating field design, available up to 660V/50Hz (1500 rpm) or 60Hz (1800 rpm), and built to meet BS5000 Part 3 and international standards.

All the UC22/27 range are self-excited with excitation power derived from the main output windings, using either the SX460/ SX440/SX421 AVR. The UC22 is also available with specific windings and a transformer controlled excitation system.

A permanent magnet generator (PMG) powered excitation system is available as an option using either the MX341 or MX321 AVR.

Detailed specification sheets are available on request.

1.2 DESIGNATION

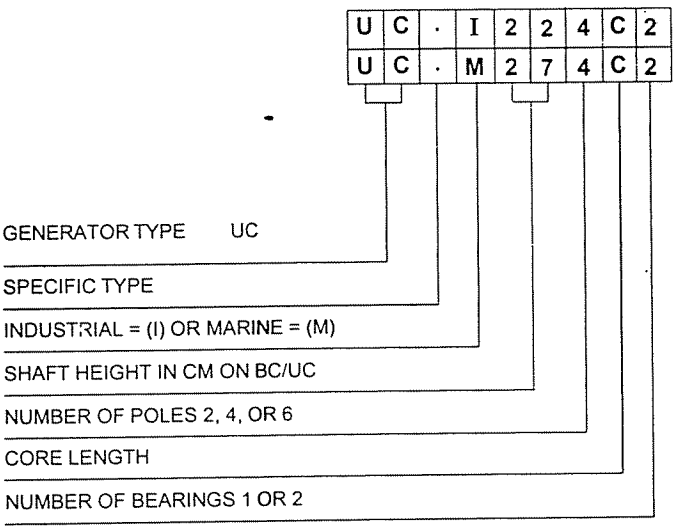

1.3 SERIAL NUMBER LOCATION AND IDENTITY NUMBER LOCATION

Each generator is metal stamped with it's own unique serial number, the location of this number is described below.

UCI and UCM generators have their serial number stamped into the upper section of the drive end frame to end bracket adaptor ring, shown as item 31 in the parts lists at the back of this book.

UCD generators have their serial number stamped into the top of the drive end adaptor /fan shroud casting. If for any reason this casting is removed, it is imperative that care is taken to refit it to the correct generator to ensure correct identification is retained.

Inside the terminal box two adhesive rectangular labels have been fixed, each carrying the generators unique identity number. One label has been fixed to the inside of the terminal box sheet metal work, and the second label fixed to the main frame of the generator.

1.4 RATING PLATE

The generator has been supplied with a self adhesive rating plate label to enable fitting after final assembly and painting.

It is intended that this label will be stuck to the outside of the terminal box on the left hand side when viewed from the N.D.E. To assist with squarely positioning the label, location protrusions have been made in the sheet metalwork.

A CE Mark label is also supplied loose for fitment after final assembly and painting. This should be attached to an external surface of the Generator at a suitable location where it will not be obscured by the customer's wiring or other fittings.

The surface in the area where a label is to be stuck must be flat, clean, and any paint finish be fully dry before attempting to attach label. Recommended method for attaching label is peel and fold back sufficient of the backing paper to expose some 20 mm of label adhesive along the edge which is to be located against the sheet metal protrusions. Once this first section of label has been carefully located and stuck into position the backing paper can be progressively removed, as the label is pressed down into position. The adhesive will achieve a permanent bond in 24 hours.

SECTION 2

PRINCIPLE OF OPERATION

2.1 SELF-EXCITED AVR CONTROLLED GENERATORS

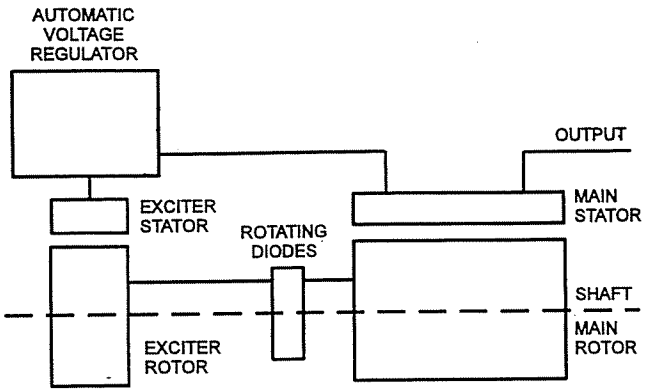

The main stator provides power for excitation of the exciter field via the SX460 (SX440 or SX421) AVR which is the controlling device governing the level of excitation provided to the exciter field. The AVR responds to a voltage sensing signal derived from the main stator winding. By controlling the low power of the exciter field, control of the high power requirement of the main field is achieved through the rectified output of the exciter armature.

The SX460 or SX440 AVR senses average voltage on two phases ensuring close regulation. In addition it detects engine speed and provides voltage fall off with speed, below a pre-selected speed (Hz) setting, preventing over-excitation at low engine speeds and softening the effect of load switching to relieve the burden on the engine.

The SX421 AVR in addition to the SX440 features has three phase rms sensing and also provides for over voltage protection when used in conjunction with an external circuit breaker (switchboard mounted).

2.2 PERMANENT MAGNET GENERATOR (PMG) EXCITED - AVR CONTROLLED GENERATORS

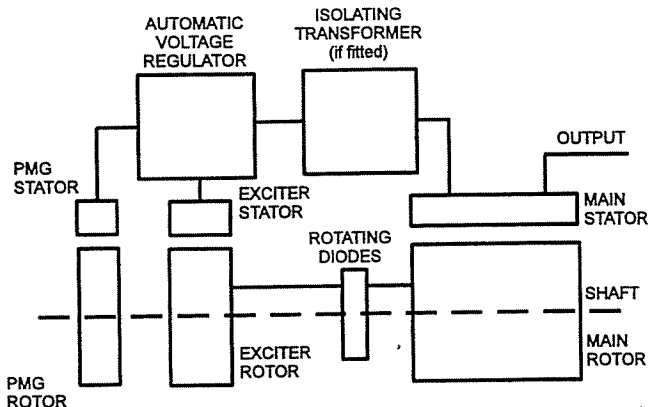

The permanent magnet generator (PMG) provides power for excitation of the exciter field via the AVR (MX341 or MX321) which is the controlling device governing the level of excitation provided to the exciter field. The AVR responds to a voltage sensing signal derived, via an isolating transformer in the case of MX321 AVR, from the main stator winding. By controlling the low power of the exciter field, control of the high power requirement of the main field is achieved through the rectified output of the exciter armature.

The PMG system provides a constant source of excitation power irrespective of main stator loading and provides high motor starting capability as well as immunity to waveform distortion on the main stator output created by non linear loads, e.g. thyristor controlled dc motor.

The MX341 AVR senses average voltage on two phases ensuring close regulation. In addition it detects engine speed and provides an adjustable voltage fall off with speed, below a pre-selected speed (Hz) setting, preventing over-excitation at low engine speeds and softening the effect of load switching to relieve the burden on the engine. It also provides over-excitation protection which acts following a time delay, to de-excite the generator in the event of excessive exciter field voltage.

The MX321 provides the protection and engine relief features of the MX341 and additionally incorporates 3 phase rms sensing and over-voltage protection.
The detailed function of all the AVR circuits is covered in the load testing (subsection 4.7).

2.3 AVR ACCESSORIES

The SX440, SX421, MX341 and MX321 AVRs incorporate circuits which, when used in conjunction with accessories, can provide for parallel operation either with 'droop' or 'astatic' control, VAR/PF control and in the case of the MX321 AVR, short circuit current limiting.

Function and adjustment of the accessories which can be fitted inside the generator terminal box are covered in the accessories section of this book.

Separate instructions are provided with other accessories available for control panel mounting.

2.4 TRANSFORMER CONTROLLED GENERATORS

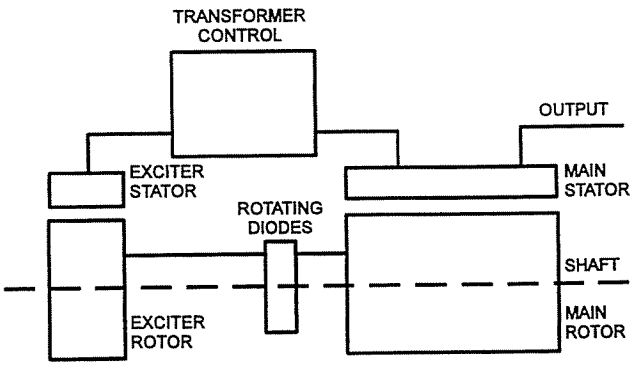

The main stator provides power for excitation of the exciter field via a transformer rectifier unit. The transformer combines voltage and current elements derived from the main stator output to form the basis of an open-loop control system, which is self regulating in nature. The system inherently compensates for load current magnitude and power factor and provides short circuit maintenance in addition to a good motor starting performance.

Three phase generators normally have a three phase transformer control for improved performance with unbalanced loads but a single phase transformer option is available.

No accessories can be provided with this control system.

Katolight Service - Master Repair Manual - Page 1023

SECTION 3

APPLICATION OF THE GENERATOR

The generator is supplied as a component part for installation in a generating set. It is not, therefore, practicable to fit all the necessary warning/hazard labels during generator manufacture. The additional labels required are packaged with this Manual, together with a drawing identifying their locations. (See below).

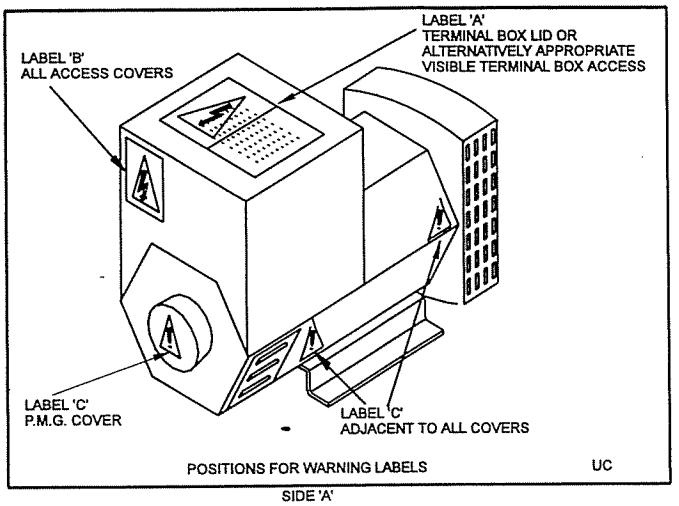

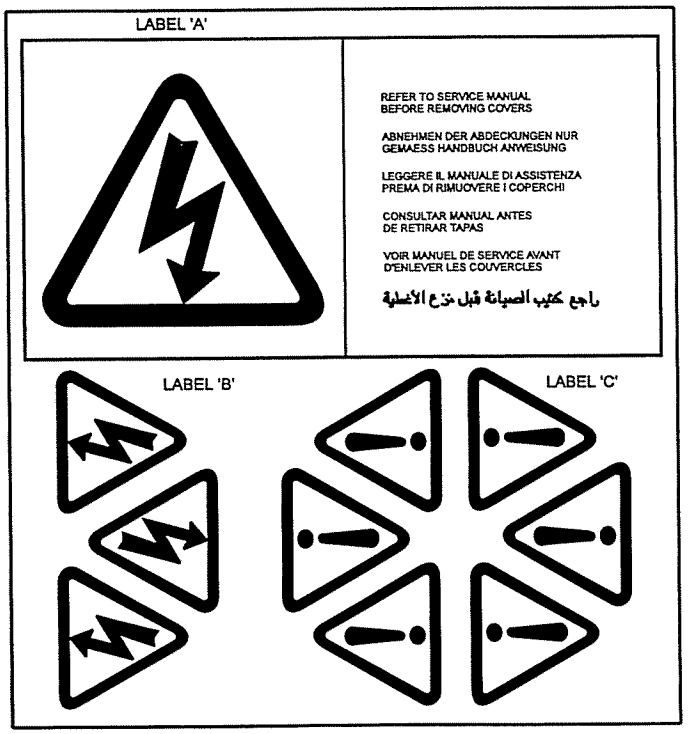

It is the responsibility of the generating set manufacturer to ensure that the correct labels are fitted, and are clearly visible.

The generators have been designed for use in a maximum ambient temperature of 40°C and altitude less than 1000m above sea level in accordance with BS5000.

Ambients in excess of 40°C and altitudes above 1000m can be tolerated with reduced ratings - refer to the generator nameplate for rating and ambient. In the event that the generator is required to operate in an ambient in excess of the nameplate value or at altitudes in excess of 1000 metres above sea level, refer to the factory.

The generators are of air-ventilated screen protected drip-proof design and are not suitable for mounting outdoors unless adequately protected by the use of canopies. Anti-condensation heaters are recommended during storage and for standby duty to ensure winding insulation is maintained in good condition.

When installed in a closed canopy it must be ensured that the ambient temperature of the cooling air to the generator does not exceed that for which the generator has been rated.

The canopy should be designed such that the engine air intake to the canopy is separated from the generator intake, particularly where the radiator cooling fan is required to draw air into the canopy. In addition the generator air intake to the canopy should be designed such that the ingress of moisture is prohibited, preferably by use of a 2 stage filter.

The air intake/outlet must be suitable for the air flow given in the following table with additional pressure drops less than or equal to those given below:

Frame	Air Flow		Additional (intake/outlet) Pressure Drop
	50Hz	60Hz	
UC22	0.216m³/sec	0.281m³/sec	6mm water gauge
	458cfm	595cfm	0.25"
UCD22	0.25m³/sec	0.31m³/sec	6mm water gauge
	530cfm	657cfm	0.25"
UC27	0.514m³/sec	0.610m³/sec	6mm water gauge
	1090cfm	1308cfm	0.25"
UCD27	0.58m³/sec	0.69m³/sec	6mm water gauge
	1230cfm	1463cfm	0.25"

Important ! **Reduction in cooling air flow or inadequate protection to the generator can result in damage and/or failure of windings.**

Dynamic balancing of the generator rotor assembly has been carried out during manufacture in accordance with BS 6861 Part 1 Grade 2.5 to ensure vibration limits of the generator are in accordance with BS 4999 Part 142.

The main vibration frequencies produced by the generator are as follows:-

4 pole	1500 rpm	25 Hz
4 pole	1800 rpm	30 Hz

However, vibrations induced by the engine are complex and contain frequencies of 1.5, 3, 5 or more times the fundamental frequency of vibration. These induced vibrations can result in generator vibration levels higher than those derived from the generator itself. It is the responsibility of the generating set designer to ensure that the alignment and stiffness of the bedplate and mountings are such that the vibration limits of BS5000 Part 3 are not exceeded.

Katolight Service - Master Repair Manual - Page 1024

In standby applications where the running time is limited and reduced life expectancy is accepted, higher levels than specified in BS5000 can be tolerated, up to a maximum of 18mm/sec.

Two bearing generators open coupled require a substantial bedplate with engine/generator mounting pads to ensure a good base for accurate alignment. Close coupling of engine to generator can increase the overall rigidity of the set. For the purposes of establishing set design the bending moment at the engine flywheel housing to generator adaptor interface should not exceed 1000ft.lb. (140 kgm). A flexible coupling, designed to suit the specific engine/generator combination, is recommended to minimise torsional effects.

Belt driven applications of two bearing generators require the pulley diameter and design to be such that the side load or force applied to the shaft is central to the extension and does not exceed the values given in the table below:-

Frame	Side Load		Shaft extension mm
	kgf	N	
UC22	408	4000	110
UC27	510	5000	140

In instances where shaft extensions greater than specified in the table have been supplied reference must be made to the factory for appropriate loadings.

Alignment of single bearing generators is critical and vibration can occur due to the flexing of the flanges between the engine and generator. As far as the generator is concerned the maximum bending moment at this point must not exceed 1000ft.lb. (140 kgm). A substanial bedplate with engine/generator mounting pads is required.

It is expected that the generator will be incorporated into a generating set operating in an environment, where the maximum shock load experienced by the generator will not exceed 3g. in any plane. If shock loads in excess of 3g are to be encountered, anti-vibration mountings must be incorporated into the generating set to ensure they absorb the excess.

The maximum bending moment of the engine flange must be checked with the engine manufacturer.

Generators can be supplied without a foot, providing the option for customers own arrangement. See SECTION 4.2.1 for assembly procedure.

Torsional vibrations occur in all engine-driven shaft systems and may be of a magnitude to cause damage at certain critical speeds. It is therefore necessary to consider the torsional vibration effect on the generator shaft and couplings.

It is the responsibility of the generator set manufacturer to ensure compatibility, and for this purpose drawings showing the shaft dimensions and rotor inertias are available for customers to forward to the engine supplier. In the case of single bearing generators coupling details are included.

Important ! **Torsional incompatibility and/or excessive vibration levels can cause damage or failure of generator and/or engine components.**

The terminal box is constructed with removable panels for easy adaptation to suit specific glanding requirements. Within the terminal box there are insulated terminals for line and neutral connections and provision for earthing. Additional earthing points are provided on the generator feet.

The neutral is NOT connected to the frame.

The main stator winding has leads brought out to the terminals in the terminal box.



Warning ! **No earth connections are made on the generator and reference to site regulations for earthing must be made. Incorrect earthing or protection arrangements can result in personal injury or death.**

Fault current curves (decrement curves), together with generator reactance data, are available on request to assist the system designer to select circuit breakers, calculate fault currents and ensure discrimination within the load network.



Warning ! **Incorrect installation, service or replacement of parts can result in severe personal injury or death, and/or equipment damage. Service personnel must be qualified to perform electrical and mechanical service.**

SECTION 4

INSTALLATION - PART 1

4.1 LIFTING

Warning ! **Incorrect lifting or inadequate lifting capacity can result in severe personal injury or equipment damage. MINIMUM LIFTING CAPACITY REQUIRED IS 750Kg. Generator lifting lugs should NOT be used for lifting the complete generator set.**

Two lifting lugs are provided for use with a shackle and pin type lifting aid. Chains of suitable length and lifting capacity must be used. Lifting points are designed to be as close to the centre of gravity of the generator as possible, but due to design restrictions it is not possible to guarantee that the generator frame will remain horizontal while lifting. Care is therefore needed to avoid personal injury or equipment damage. The correct lifting arrangement is shown on the label attached to the lifting lug. (See sample below).

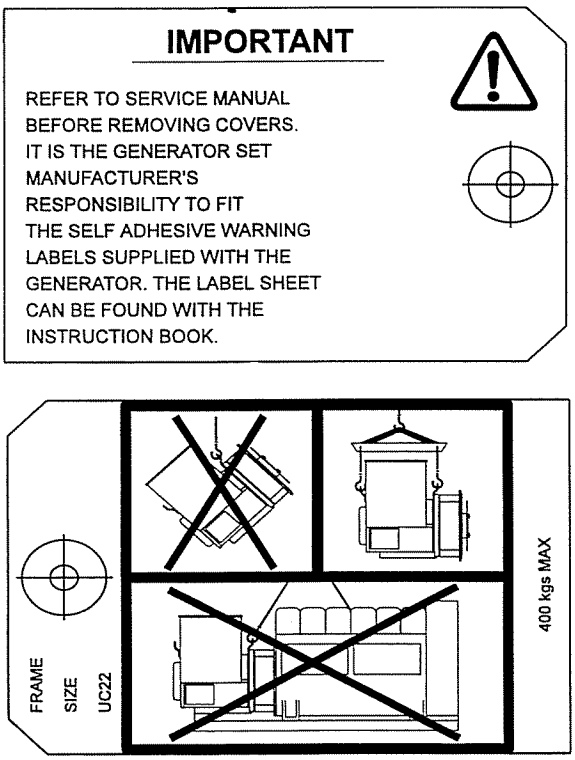

Single bearing generators are supplied fitted with a rotor retaining bar at the non-drive end of the shaft.

To remove retaining bar:

1. Remove the four screws holding the sheet metal cover at the non drive end and remove cover
2. Remove central bolt holding the retaining bar to the shaft
3. Refit sheet metal cover.

Once the bar is removed, to couple the rotor to engine, the rotor is free to move in the frame, and care is needed during coupling and alignment to ensure the frame is kept in the horizontal plane.

Generators fitted with a PMG excitation system are not fitted with retaining bar. Refer to frame designation to verify generator type (subsection 1.2)

4.2 ASSEMBLY

During the assembly of the generator to the engine it will be necessary firstly to carefully align, then rotate, the combined generator rotor - engine crankshaft assembly, as part of the construction process, to allow location, insertion and tightening of the coupling bolts. This requirement to rotate the combined assemblies exists for both single and two bearing units.

During the assembly of single bearing units it is necessary to align the generator's coupling holes with the engine flywheel holes; it is suggested that two diametrically opposite location dowel pins are fitted to the engine flywheel, over which the generator coupling can slide into final location into the engine flywheel spigot recess. The dowels must be removed and replaced by coupling bolts before the final bolt tightening sequence.

While fitting and tightening the coupling bolts it will be necessary to rotate the engine crankshaft - generator rotor assembly. Care should be taken to ensure that rotation is carried out in an approved manner that ensures safe working practice when reaching inside the machine to insert or tighten coupling bolts, and that no component of the assembly is damaged by non-approved methods of assembly rotation.

Engine manufacturers have available a proprietary tool or facility designed to enable manual rotation of the crankshaft assembly. This must always be used, having been engineered as an approved method of assembly rotation, engaging the manually driven pinion with the engine flywheel starter ring-gear.

Caution ! **Before working inside the generator, during the aligning and fitting of coupling bolts, care should be taken to lock the assembly to ensure there is no possibility of rotational movement.**

4.2.1 NO FOOT OPTION

Generators can be supplied without a foot providing the option for customers own arrangement.

For details of mounting this arrangement, see the general arrangement drawing supplied with the generator. Alternatively refer to Newage International for a copy of the latest general arrangement drawing showing the 'NO FOOT OPTION' appropriate to your generator.

4.2.2 TWO BEARING GENERATORS

A flexible coupling should be fitted and aligned in accordance with the coupling manufacturer's instruction.

If a close coupling adaptor is used the alignment of machined faces must be checked by offering the generator up to the engine. Shim the generator feet if necessary. Ensure adaptor guards are fitted after generator/engine assembly is complete. Open coupled sets require a suitable guard, to be provided by the set builder.

In the case of belt driven generators, ensure alignment of drive and driven pulleys to avoid axial load on the bearings. Screw type tensioning devices are recommended to allow accurate adjustment of belt tension whilst maintaining pully alignment. Side loads should not exceed values given in SECTION 3.

Belt and pulley guards must be provided by the set builder.

Important ! **Incorrect belt tensioning will result in excessive bearing wear.**

Caution ! **Incorrect guarding and/or generator alignment can result in personal injury and/or equipment damage.**

4.2.3 SINGLE BEARING GENERATORS

Alignment of single bearing generators is critical. If necessary shim the generator feet to ensure alignment of the machined surfaces.

For transit and storage purposes the generator frame spigot and rotor coupling plates have been coated with a rust preventative. This MUST BE removed before assembly to engine.

A practical method for removal of this coating is to clean the mating surface areas with a de-greasing agent based on a petroleum solvent.

Care should be taken not to allow any cleaning agent to come into prolonged contact with skin.

The sequence of assembly to the engine should generally be as follows:

1. On the engine check the distance from the coupling mating face on the flywheel to the flywheel housing mating face. This should be within +/-0.5mm of nominal dimension. This is necessary to ensure that a thrust is not applied to the a.c. generator bearing or engine bearing.

2. Check that the bolts securing the flexible plates to the coupling hub are tight and locked into position. Torque tightening is 24.9kgfm (244Nm; 180 lb ft).

2a. **UCD224 Only**
Torque tightening is 15.29 kgfm (150Nm; 110 lb ft).

3. Remove covers from the drive end of the generator to gain access to coupling and adaptor bolts.

4. Check that coupling discs are concentric with adaptor spigot. This can be adjusted by the use of tapered wooden wedges between the fan and adaptor. Alternatively the rotor can be suspended by means of a rope sling through the adaptor opening.

5. Offer the a.c. generator to engine and engage both coupling discs and housing spigots at the same time, finally pulling home by using the housing and coupling bolts. Use heavy gauge washers between bolt head and discs on disc to flywheel bolts.

6. Tighten coupling disc to flywheel. Refer to engine manual for torque setting of disc to flywheel bolts.

7. Remove wooden wedges.

Caution ! **Incorrect guarding and/or generator alignment can result in personal injury and/or equipment damage.**

4.3 EARTHING

The generator frame should be solidly bonded to the generating set bedplate. If antivibration mounts are fitted between the generator frame and its bedplate a suitably rated earth conductor (normally one half of the cross sectional area of the main line cables) should bridge across the antivibration mount.



Warning ! **Refer to local regulations to ensure that the correct earthing procedure has been followed.**

4.4 PRE-RUNNING CHECKS
4.4.1 INSULATION CHECK

Before starting the generating set, both after completing assembly and after installation of the set, test the insulation resistance of windings.

The AVR should be disconnected during this test.

A 500V Megger or similar instrument should be used. Disconnect any earthing conductor connected between neutral and earth and megger an output lead terminal U, V or W to earth. The insulation resistance reading should be in excess of 5MΩ to earth. Should the insulation resistance be less than 5MΩ the winding must be dried out as detailed in the Service and Maintenance section of this Manual.

Important ! **The windings have been H.V. tested during manufacture and further H.V. testing may degrade the insulation with consequent reduction in operating life. Should it be necessary to demonstrate H.V. testing, for customer acceptance, the tests must be carried out at reduced voltage levels i.e. Test Voltage= 0.8 (2 X Rated Voltage + 1000)**

4.4.2 DIRECTION OF ROTATION

The generator is supplied to give a phase sequence of U V W with the generator running clockwise looking at the drive end (unless otherwise specified at the time of ordering). If the generator phase rotation has to be reversed after the generator has been despatched apply to factory for appropriate wiring diagrams.

UCI224, UCI274, UCM224, UCM274

Machines are fitted with bi-directional fans and are suitable for running in either direction of rotation.

UCD224, UCD274

Machines are fitted with uni-directional fans and are suitable for running in one direction only.

4.4.3 VOLTAGE AND FREQUENCY

Check that the voltage and frequency levels required for the generating set application are as indicated on the generator nameplate.

Three phase generators normally have a 12 ends out reconnectable winding. If it is necessary to reconnect the stator for the voltage required, refer to diagrams in the back of this manual.

4.4.4 AVR SETTINGS

To make AVR selections and adjustments remove the AVR cover and refer to 4.4.4.1, 4.4.4.2, 4.4.4.3, 4.4.4.4 or 4.4.4.5 depending upon type of AVR fitted. Reference to the generator nameplate will indicate AVR type (SX460, SX440, SX421, MX341 or MX321).

Most of the AVR adjustments are factory set in positions which will give satisfactory performance during initial running tests. Subsequent adjustment may be required to achieve optimum performance of the set under operating conditions. Refer to 'Load Testing' section for details.

4.4.4.1 TYPE SX460 AVR

The following 'jumper' connections on the AVR should be checked to ensure they are correctly set for the generating set application.

Refer to Fig. 1 for location of selection links.

1. Frequency selection

50Hz operation LINK C-50
60Hz operation LINK C-60

2. External hand trimmer selection

No external hand trimmer LINK 1-2
External hand trimmer required - REMOVE LINK 1-2 and connect trimmer across terminals 1 and 2.

3. AVR Input Selection

High voltage	(220/240V) Input	NO LINK
Low voltage	(110/120V) Input	LINK 3-4

Refer to diagram in the back of this manual to determine wiring.

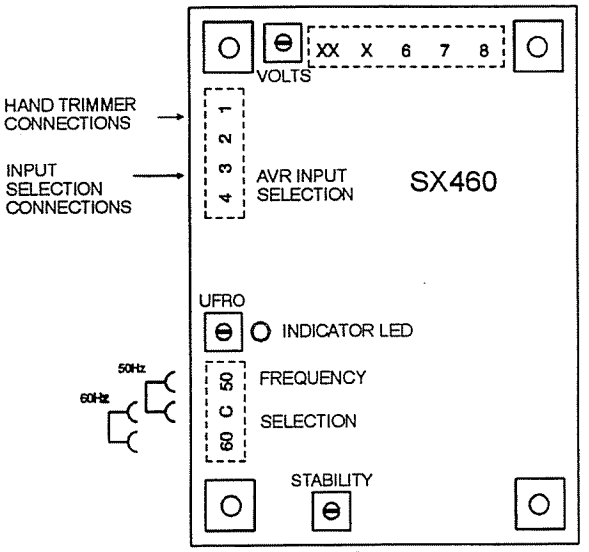

Fig. 1

4.4.4.2 TYPE SX440 AVR

The following 'jumper' connections on the AVR should be checked to ensure they are correctly set for the generating set application.

Refer to Fig. 2 for location of selection links.

1. Frequency selection terminals

50Hz operation LINK C-50
60Hz operation LINK C-60

2. Stability selection terminals

Frame UC22 LINK A-C
Frame UC27 LINK B-C

3. Sensing selection terminals

LINK 2-3
LINK 4-5
LINK 6-7

4. Excitation Interruption Link

LINK K1-K2

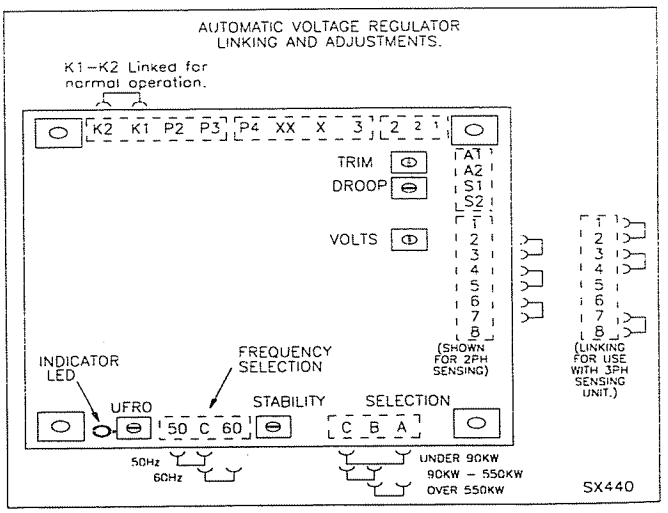

Fig. 2

4.4.4.3 TYPE SX421 AVR

The following 'jumper' connections on the AVR should be checked to ensure they are correctly set for the generating set application.

Refer to Fig. 3 for location of selection links.

1. Frequency selection terminals

50Hz operation LINK C-50
60Hz operation LINK C-60

2. Stability selection terminals

Depending upon kW output LINK B-D
or LINK A-C
or LINK B-C

3. Terminals K1 - K2

Excitation circuit breaker closed

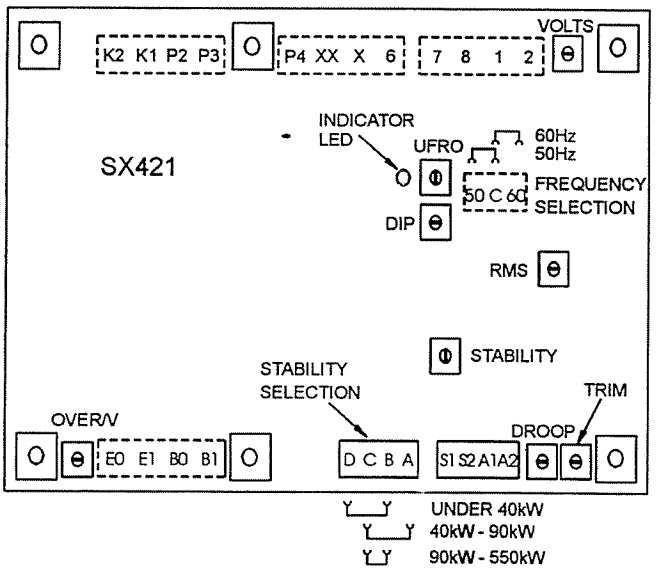

Fig. 3

4.4.4.4 TYPE MX341 AVR

The following 'jumper' connections on the AVR should be checked to ensure they are correctly set for the generating set application.

Refer to Fig. 4 for location of setting links.

1. Frequency selection terminals

50Hz operation LINK 2-3
60Hz operation LINK 1-3

2. Stability selection terminals

Frame UC22 LINK A-C
Frame UC27 LINK B-C

3. Sensing selection terminals *

LINK 2-3
LINK 4-5
LINK 6-7

4. Excitation Interruption Link

LINK K1-K2

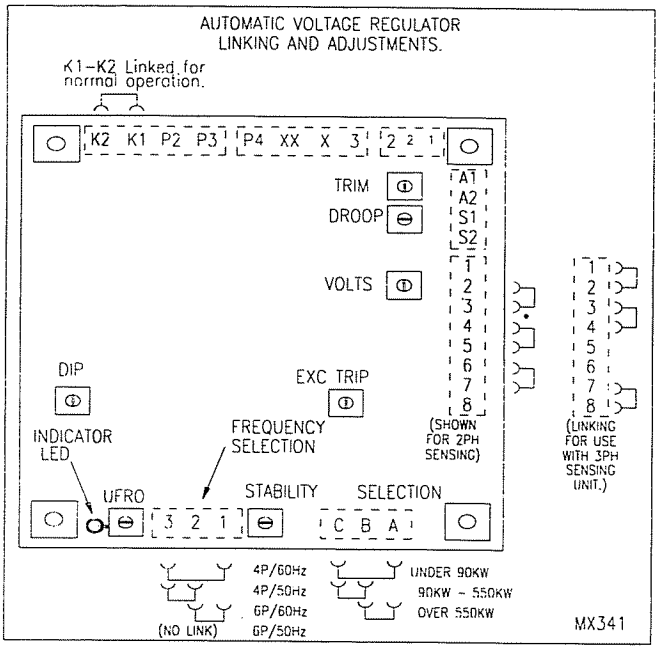

Fig. 4

4.4.4.5 TYPE MX321 AVR

The following 'jumper' connections on the AVR should be checked to ensure they are correctly set for the generating set application.

Refer to Fig. 5 for location of setting links.

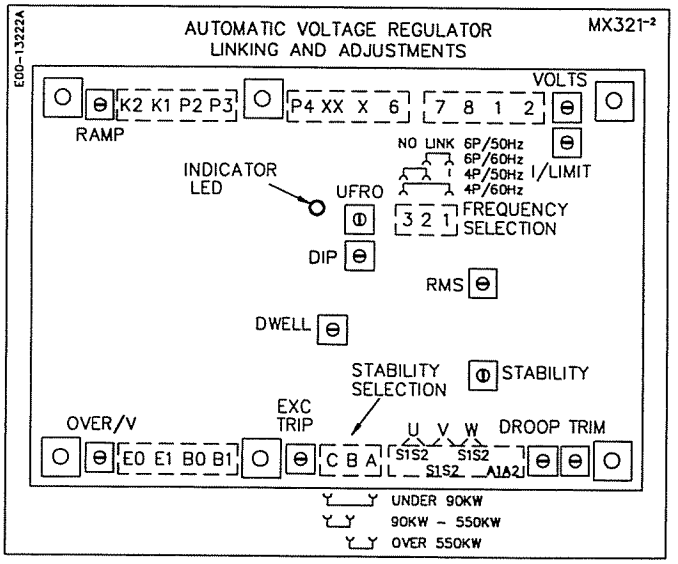

Fig. 5

1. Frequency selection terminals

50Hz operation LINK 2-3
60Hz operation LINK 1-3

2. Stability selection terminals

Frame UC22 LINK A-C
Frame UC27 LINK B-C

3. Terminals K1 - K2

Excitation circuit breaker closed.
If this option not fitted, K1 - K2 linked at auxiliary terminal block.

4.4.5 TRANSFORMER CONTROLLED EXCITATION SYSTEM (Series 5)

This control system is identified with the digit 5 as the last digit of the frame size quoted on the nameplate.

The excitation control is factory set for the specific voltage shown on the nameplate and requires no adjustment.

4.5 GENERATOR SET TESTING

Warning ! **During testing it may be necessary to remove covers to adjust controls exposing 'live' terminals or components. Only personnel qualified to perform electrical service should carry out testing and/or adjustments.**

4.5.1 TEST METERING/CABLING

Connect any instrument wiring and cabling required for initial test purposes with permanent or spring-clip type connectors.

Minimum instrumentation for testing should be line - line or line to neutral voltmeter, Hz meter, load current metering and kW meter. If reactive load is used a power factor meter is desirable.

Important ! **When fitting power cables for load testing purposes, ensure cable voltage rating is at least equal to the genrator rated voltage. The load cable termination should be placed on top of the winding lead termination and clamped with the nut provided.**

Caution ! **Check that all wiring terminations for internal or external wiring are secure, and fit all terminal box covers and guards. Failure to secure wiring and/or covers may result in personal injury and/or equipment failure.**

4.6 INITIAL START-UP

Warning ! **During testing it may be necessary to remove covers to adjust controls exposing 'live' terminals or components. Only personnel qualified to perform electrical service should carry out testing and/or adjustments. Refit all access covers after adjustments are completed.**

On completion of generating set assembly and before starting the generating set ensure that all engine manufacturer's pre-running procedures have been completed, and that adjustment of the engine governor is such that the generator will not be subjected to speeds in excess of 125% of the rated speed.

Important ! **Overspeeding of the generator during initial setting of the speed governor can result in damage to the generator rotating components.**

In addition remove the AVR access cover (on AVR controlled generators) and turn VOLTS control fully anti-clockwise. Start the generating set and run on no-load at nominal frequency. Slowly turn VOLTS control potentiometer clockwise until rated voltage is reached. Refer to Fig. 6a, 6b, 6c, 6d or 6e for control potentiometer location.

Important ! **Do not increase the voltage above the rated generator voltage shown on the generator nameplate.**

The STABILITY control potentiometer will have been pre-set and should normally not require adjustment, but should this be required, usually identified by oscillation of the voltmeter, refer to Fig. 6a, 6b, 6c, 6d or 6e for control potentiometer location and proceed as follows:-

1. Run the generating set on no-load and check that speed is correct and stable
2. Turn the STABILITY control potentiometer clockwise, then turn slowly anti-clockwise until the generator voltage starts to become unstable.

The correct setting is slightly clockwise from this position (i.e. where the machine volts are stable but close to the unstable region).

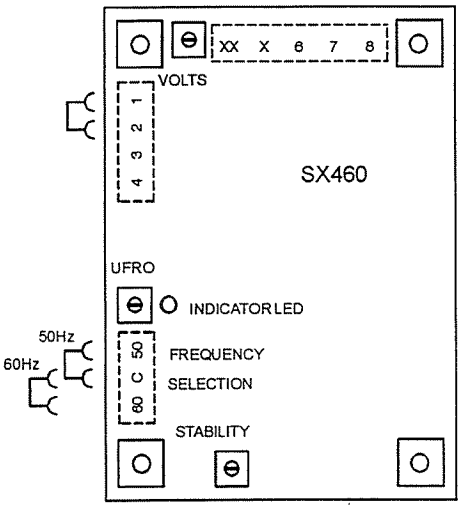

Fig. 6a

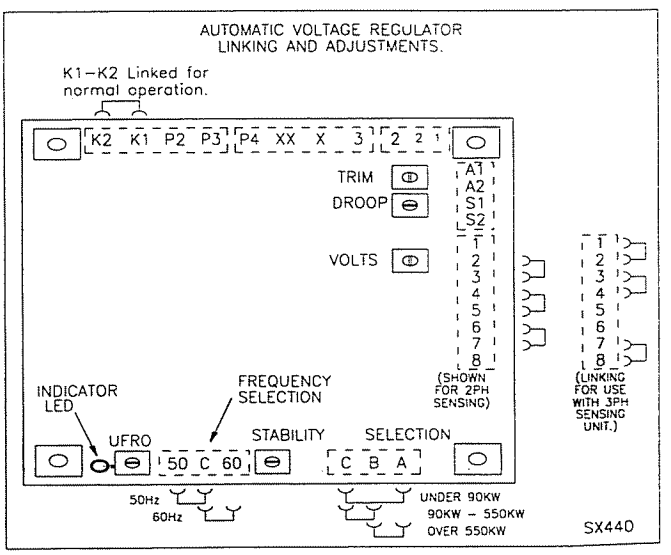

Fig. 6b

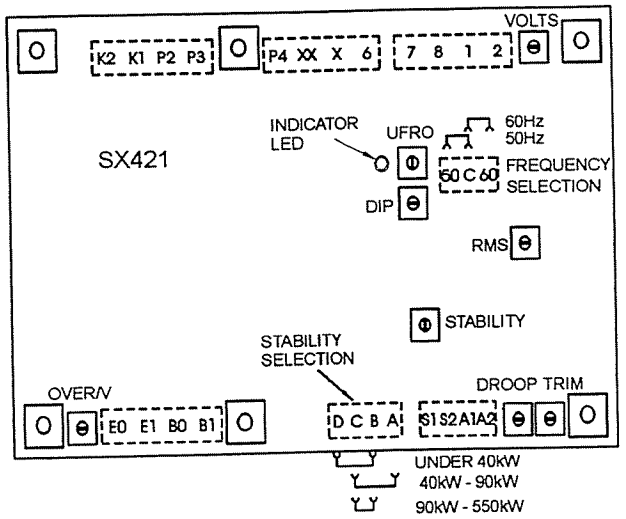

Fig. 6c

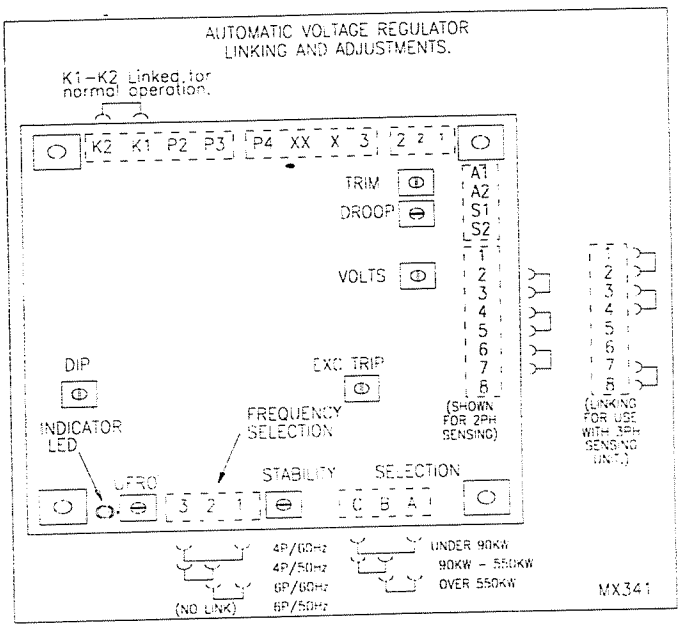

Fig. 6d

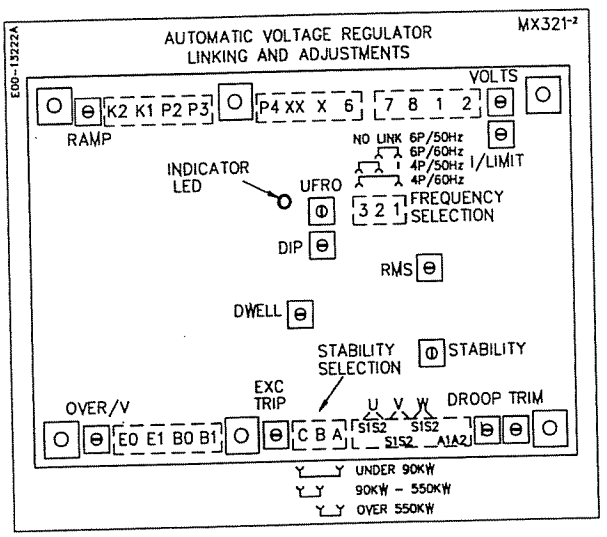

Fig. 6e

4.7 LOAD TESTING

Warning !

During testing it may be necessary to remove covers to adjust controls exposing 'live' terminals or components. Only personnel qualified to perform electrical service should carry out testing and/or adjustments. Refit all access covers after adjustments are completed.

4.7.1 AVR CONTROLLED GENERATORS - AVR ADJUSTMENTS

Refer to Fig. 6a, 6b, 6c, 6d or 6e for control potentiometer locations.

Having adjusted VOLTS and STABILITY during the initial start-up procedure, other AVR control functions should not normally need adjustment.

If however, poor voltage regulation on-load or voltage collapse is experienced, refer to the following paragraphs on each function to a) check that the symptoms observed do indicate adjustment is necessary, and b) to make the adjustment correctly.

4.7.1.1 UFRO (Under Frequency Roll Off) (AVR Types SX460, SX440, SX421, MX341 and MX321)

The AVR incorporates an underspeed protection circuit which gives a voltage/speed (Hz) characteristic as shown:

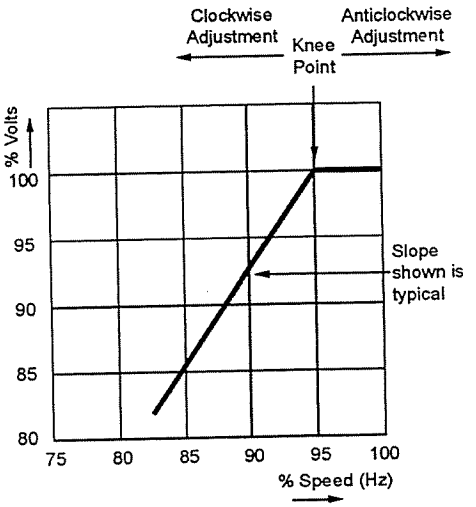

Fig. 7

The UFRO control potentiometer sets the "knee point".

Symptoms of incorrect setting are a) the light emitting diode (LED) indicator, just above the UFRO Control potentiometer, being permanently lit when the generator is on load, and b) poor voltage regulation on load, i.e. operation on the sloping part of the characteristic.

Clockwise adjustment lowers the frequency (speed) setting of the "knee point" and extinguishes the LED. For Optimum setting the LED should illuminate as the frequency falls just below nominal frequency, i.e. 47Hz on a 50Hz generator or 57Hz on a 60Hz generator.

Important ! **With AVR Types MX341 and MX321. If the LED is illuminated and no output voltage is present, refer to EXC TRIP and/or OVER/V sections below.**

4.7.1.2 EXC TRIP (Excitation Trip)
AVR Types MX341 and MX321

An AVR supplied from a permanent magnet generator inherently delivers maximum excitation power on a line to line or line to neutral short circuit or large overload. In order to protect the generator windings the AVR incorporates an over excitation circuit which detects high excitation and removes it after a pre-determined time, i.e. 8-10 seconds.

Symptoms of incorrect setting are the generator output collapses on load or small overload, and the LED is permanently illuminated.

The correct setting is 70 volts +/-5% between terminals X and XX.

4.7.1.3 OVER/V (Over Voltage)
AVR Type SX421, MX321

Over voltage protection circuitry is included in the AVR to remove generator excitation in the event of loss of AVR sensing input.

The MX321 has both internal electronic de-excitation and provision of a signal to operate an external circuit breaker.

The SX421 only provides a signal to operate an external breaker, which MUST be fitted if over voltage protection is required.

Incorrect setting would cause the generator output voltage to collapse at no-load or on removal of load, and the LED to be illuminated.

The correct setting is 300 volts +/-5% across terminals E1, E0. Clockwise adjustment of the OVER/V control potentiometer will increase the voltage at which the circuit operates.

4.7.1.4 TRANSIENT LOAD SWITCHING ADJUSTMENTS
AVR Types SX421, MX341 and MX321

The additional function controls of DIP and DWELL are provided to enable the load acceptance capability of the generating set to be optimised. The overall generating set performance depends upon the engine capability and governor response, in conjunction with the generator characteristics.

It is not possible to adjust the level of voltage dip or recovery independently from the engine performance, and there will always be a 'trade off' between frequency dip and voltage dip.

DIP
AVR Types SX421, MX341 and MX321

AVR Types SX421, MX341 and MX321
The dip function control potentiometer adjusts the slope of the voltage/speed (Hz) characteristic below the knee point as shown below:

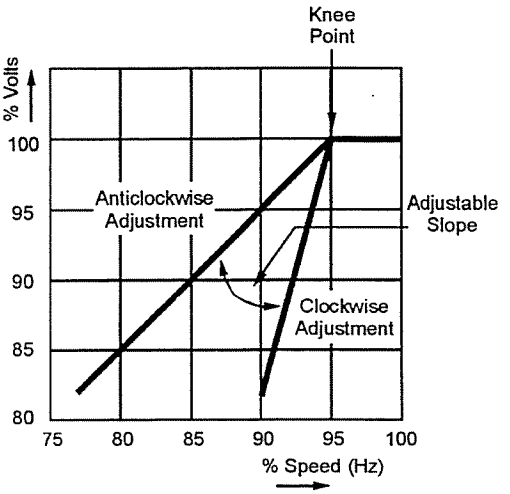

Fig. 8

DWELL
AVR Type MX321

The dwell function introduces a time delay between the recovery of voltage and recovery of speed.

The purpose of the time delay is to reduce the generator kW below the available engine kW during the recovery period, thus allowing an improved speed recovery.

Again this control is only functional below the "knee point", i.e. if the speed stays above the knee point during load switching there is no effect from the DWELL function setting.

Clockwise adjustment gives increased recovery time.

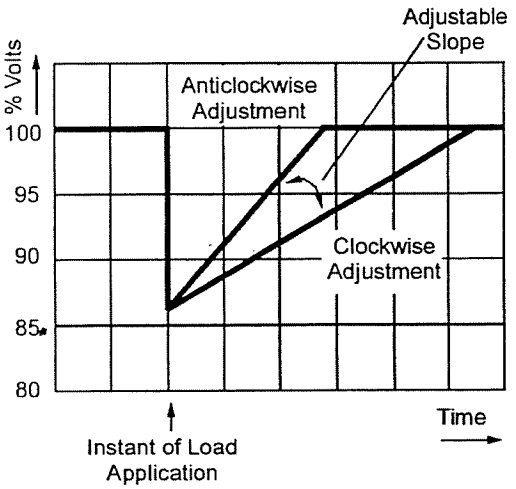

Fig. 9

The graphs shown above are representations only, since it is impossible to show the combined effects of voltage regulator and engine governor performance.

4.7.1.5 RAMP
AVR Type MX321

The RAMP potentiometer enables adjustment of the time taken for the generator's initial build up to normal rated voltage during each start and run up to speed. The potentiometer is factory set to give a ramp time of three seconds, which is considered to be suitable for most applications. This time can be reduced to one second by turning the pot. fully counter clockwise, and increased to eight seconds by turning the pot. fully clockwise.

4.7.2 TRANSFORMER CONTROLLED GENERATORS - TRANSFORMER ADJUSTMENT

Normally no adjustment is required but should the no-load voltage and/or on-load voltage be unacceptable, adjustment of the transformer air gap can be made as follows.

Stop the generator. Remove transformer cover box. (Normally left hand side of the terminal box when viewed from the non drive end).

Slacken the three transformer mounting bolts along the top of the transformer.

Start the set with a voltmeter connected across the main output terminals.

Adjust the air gap between the transformer top lamination section and the transformer limbs to obtain required voltage on no-load. Slightly tighten the three mounting bolts. Switch load 'on' and 'off' two or three times. Application of load will normally raise the voltage setting slightly. With the load 'off' recheck the no-load voltage.
Readjust air gap and finally tighten mounting bolts.

Refit the access cover.



Warning !

Failure to refit covers can result in operator personal injury or death.

4.8 ACCESSORIES

Refer to the "ACCESSORIES" - Section 6 of this Manual for setting up procedures related to generator mounted accessories.

If there are accessories for control panel mounting supplied with the generator refer to the specific accessory fitting procedures inserted inside the back cover of this book.

SECTION 5

INSTALLATION - PART 2

5.1 GENERAL

The extent of site installation will depend upon the generating set build, e.g. if the generator is installed in a canopied set with integral switchboards and circuit breaker, on site installation will be limited to connecting up the site load to the generating set output terminals . In this case reference should be made to the generating set manufacturer's instruction book and any pertinent local regulations.

If the generator has been installed on a set without switchboard or circuit breaker the following points relating to connecting up the generator should be noted.

5.2 GLANDING

The terminal box is most conveniently glanded on either the right or left hand side. Both panels are removable for drilling/punching to suit glands/or glanding boxes. If single core cables are taken through the terminal box side panel an insulated or non-magnetic gland plate should be fitted.

Incoming cables should be supported from either below or above the box level and at a sufficient distance from the centre line of the generating set so as to avoid a tight radius at the point of entry into the terminal box panel, and allow movement of the generator set on its anti-vibration mountings without excessive stress on the cable.

Before making final connections, test the insulation resistance of the windings. The AVR should be disconnected during this test.

A 500V Megger or similar instrument should be used. Should the insulation resistance be less than 5MΩ the windings must be dried out as detailed in the Service and Maintenance section of this manual.

When making connections to the terminals the incoming cable termination should be placed on top of the winding lead termination(s) and clamped with the nut provided.

Important ! **To avoid the possibility of swarf entering any electrical components in the terminal box, panels must be removed for drilling.**

5.3 EARTHING

The neutral of the generator is not bonded to the generator frame as supplied from the factory. An earth terminal is provided inside the terminal box adjacent to the main terminals. Should it be required to operate with the neutral earthed a substantial earth conductor (normally equivalent to one half of the section of the line conductors) must be connected between the neutral and the earth terminal inside the terminal box. Additional earth terminals are provided on the generator feet. These should be already bonded to the generating set bedplate by the generating set builder, but will normally be required to be connected to the site earth system.

Caution ! **Reference to local electricity regulations or safety rules should be made to ensure correct earthing procedures have been followed.**

5.4 PROTECTION

It is the responsibility of the end user and his contractors/sub-contractors to ensure that the overall system protection meets the needs of any inspectorate, local electricity authority or safety rules, pertaining to the site location.

To enable the system designer to achieve the necessary protection and/or discrimination, fault current curves are available on request from the factory, together with generator reactance values to enable fault current calculations to be made.



Warning !

Incorrect installation and/or protective systems can result in personal injury and/or equipment damage. Installers must be qualified to perform electrical installation work.

5.5 COMMISSIONING

Ensure that all external cabling is correct and that all the generating set manufacturer's pre-running checks have been carried out before starting the set.

The generator AVR controls will have been adjusted during the generating set manufacturer's tests and should normally not require further adjustment.

Should malfunction occur during commissioning refer to Service and Maintenance section 'Fault Finding' procedure (subsection 7.4).

SECTION 6

ACCESSORIES

Generator control accessories may be fitted, as an option, in the generator terminal box. If fitted at the time of supply, the wiring diagram(s) in the back of this book shows the connections. When the options are supplied separately, fitting instructions are provided with the accessory.

The following matrix indicates availability of accessories with the differing AVRs.

Note the SX460 is not suitable for operation with accessories.

AVR Model	Parallel -ing Droop or Astatic	Manual Voltage Regulator	VAr/PF Control	Current Limit
SX440	✔	✘	✔	✘
SX421	✔	✘	✔	✘
MX341	✔	✔	✔	✘
MX321	✔	✔	✔	✔

6.1 REMOTE VOLTAGE ADJUST (ALL AVR TYPES)

A remote voltage adjust (hand trimmer) can be fitted.

SX460	Remove link 1-2 on the AVR and connect adjuster to terminals 1 and 2.
SX440, SX421 MX341 and MX321	Remove link 1-2 at the auxiliary terminals and connect adjuster to terminals 1 and 2.

6.2 PARALLEL OPERATION

Understanding of the following notes on parallel operation is useful before attempting the fitting or setting of the droop kit accessory. When operating in parallel with other generators or the mains, it is essential that the phase sequence of the incoming generator matches that of the busbar and also that all of the following conditions are met before the circuit breaker of the incoming generator is closed on to the busbar (or operational generator).

1. Frequency must match within close limits.
2. Voltages must match within close limits.
3. Phase angle of voltages must match within close limits. A variety of techniques, varying from simple synchronising lamps to fully automatic synchronisers, can be used to ensure these conditions are met.

Important! **Failure to meet conditions 1, 2, and 3 when closing the cricuit breaker, will generate excessive mechanical and electrical stresses, resulting in equipment damage.**

Once connected in parallel a minimum instrumentation level per generator of voltmeter, ammeter, wattmeter (measuring total power per generator), and frequency meter is required in order to adjust the engine and generator controls to share kW in relation to engine ratings and kVAr in relation to generator ratings.

It is important to recognise that:

1. True kW are derived from the engine, and speed governor characteristics determine the kW sharing between sets

and

2. kVAr are derived from the generator, and excitation control characteristics determine the kVAr sharing.
   Reference should be made to the generating set manufacturer's instructions for setting the governor controls.

6.2.1 DROOP

The most commonly used method of kVAr sharing is to create a generator voltage characteristic which falls with decreasing power factor (increasing kVAr). This is achieved with a current transformer (C.T.) which provides a signal dependent on current phase angle (i.e. power factor) to the AVR.

The current transformer has a burden resistor on the AVR board, and a percentage of the burden resistor voltage is summed into the AVR circuit. Increasing droop is obtained by turning the DROOP control potentiometer clockwise.

The diagrams below indicate the effect of droop in a simple two generator system:-

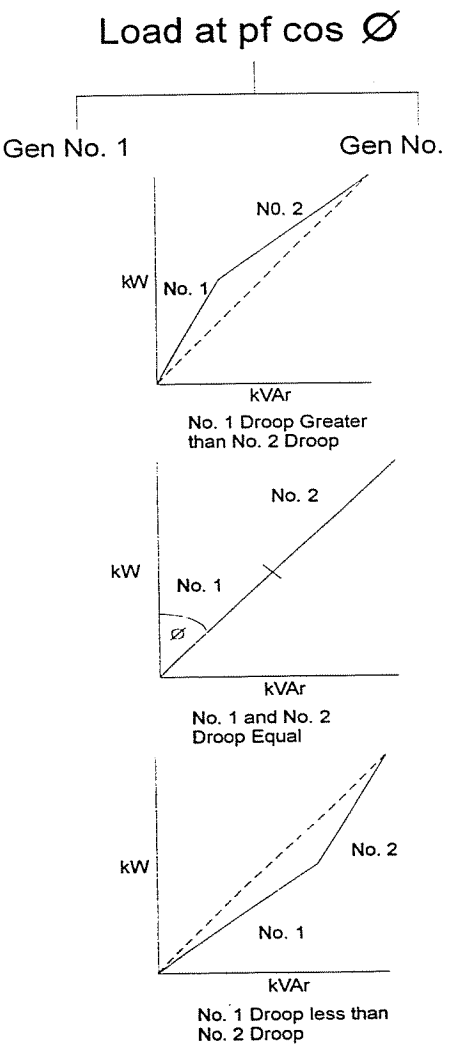

Katolight Service - Master Repair Manual - Page 1035

Generally 5% droop at full load current zero p.f. is sufficient to ensure kVAr sharing.

If the droop accessory has been supplied with the generator it will have been tested to ensure correct polarity and set to a nominal level of droop. The final level of droop will be set during generating set commissioning.

The following setting procedure will be found to be helpful.

6.2.1.1 SETTING PROCEDURE

Depending upon available load the following settings should be used - all are based on rated current level.

0.8 P.F. LOAD	(at full load current)	SET DROOP TO 3%
Zero P.F. LOAD	(at full load current)	SET DROOP TO 5%

Setting the droop with low power factor load is the most accurate. Run each generator as a single unit at rated frequency or rated frequency + 4% depending upon type of governor and nominal voltage. Apply available load to rated current of the generator. Adjust 'DROOP' control potentiometer to give droop in line with above table. Clockwise rotation increases amount of droop. Refer to Fig 9a, 9b, 9c or 9d for potentiometer locations.

Note 1)
Reverse polarity of the C.T. will raise the generator voltage with load. The polarities S1-S2 shown on the wiring diagrams are correct for clockwise rotation of the generator looking at the drive end. Reversed rotation requires S1-S2 to be reversed.

Note 2)
The most important aspect is to set all generators equal. The precise level of droop is less critical.

Note 3)
A generator operated as a single unit with a droop circuit set at rated load 0.8 power factor is unable to maintain the usual +/- 0.5% regulation. A shorting switch can be connected across S1-S2 to restore regulation for single running.

Important ! **LOSS OF FUEL to an engine can cause its generator to motor with consequent damage to the generator windings. Reverse power relays should be fitted to trip main circuit breaker. LOSS OF EXCITATION to the generator can result in large current oscillations with consequent damage to generator windings. Excitation loss detection equipment should be fitted on trip main circuit breaker.**

6.2.2 ASTATIC CONTROL

The 'droop' current transformer can be used in a connection arrangement which enables the normal regulation of the generator to be maintained when operating in parallel.

This feature is only supplied from the factory as a fitted droop kit, however, if requested at the time of order, the diagrams inside the back cover of this book will give the necessary site connections. The end user is required to provide a shorting switch for the droop current transformer secondary.

Should the generator be required to be converted from standard droop to 'astatic' control, diagrams are available on request.

The setting procedure is exactly the same as for DROOP. (Subsection 6.2.1.1)

Important ! **When using this connection arrangement a shorting switch is required across each C.T. burden (terminals S1 and S2.)The switch must be closed a) when a generating set is not running and b) when a generating set is selected for single running.**

6.3 MANUAL VOLTAGE REGULATOR (MVR) - MX341 and MX321 AVR

This accessory is provided as an 'emergency' excitation system, in the event of an AVR failure.

Powered from the PMG output the unit is manually set, but automatically controls the excitation current, independent of generator voltage or frequency.

The unit is provided with 'MANUAL', 'OFF', 'AUTO' switching facility.

'MANUAL'
- position connects the exciter field to the MVR output. Generator output is then controlled by the operator adjusting the excitation current.

'OFF'
- disconnects the exciter field from both MVR and the normal AVR.

'AUTO'
- connects the exciter field to the normal AVR and the generator output is controlled at the pre-set voltage under AVR control.

Switching mode of operation should be carried out with the generator set stationary to avoid voltage surges on the connected load, although neither the MVR nor AVR will be damaged should the switching be carried out with the set running.

6.4 OVERVOLTAGE DE-EXCITATION BREAKER SX421 and MX321 AVR

This accessory provides positive interuption of the excitation power in the event of overvoltage due to loss of sensing or internal AVR faults including the output power device.

With the MX321 AVR this accessory is supplied loose for fitting in the control panel.

In the case of the SX421 the cricuit breaker is always supplied and will normally be fitted in the generator.

Important ! **When the circuit breaker is supplied loose, the AVR is fitted with a link on terminals K1-K2 to enable operation of the AVR. When connecting the circuit breaker this link must be removed.**

Katolight Service - Master Repair Manual - Page 1036

6.4.1 RESETTING THE BREAKER

In the event of operation of the circuit breaker, indicated by loss of generator output voltage, manual resetting is required. When in the "tripped" state the circuit breaker switch lever shows "OFF". To reset move the switch lever to the position showing "ON".

When fitted in the generator, access to the breaker is gained by removal of the AVR access cover.

Danger !

Terminals which are LIVE with the generating set running are exposed when the AVR access cover is removed. Resetting of the circuit breaker MUST be carried out with the generating set stationary, and engine starting circuits disabled.

The circuit breaker is mounted on the AVR mounting bracket either to the left or to the right of the AVR depending upon AVR poistion. After resetting the circuit breaker replace the AVR access cover before restarting the generating set. Should resetting of the circuit breaker not restore the generator to normal operation, refer to subsection 7.5.

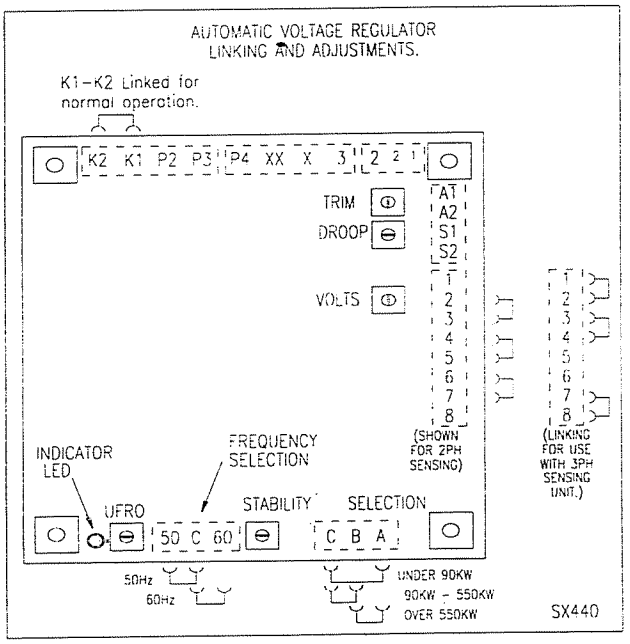

Fig. 9a

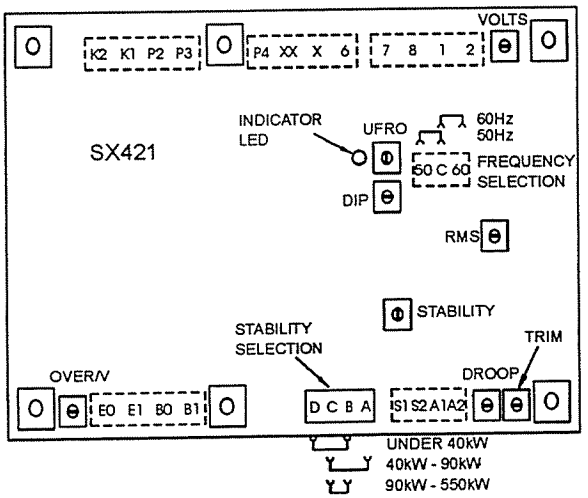

Fig. 9b

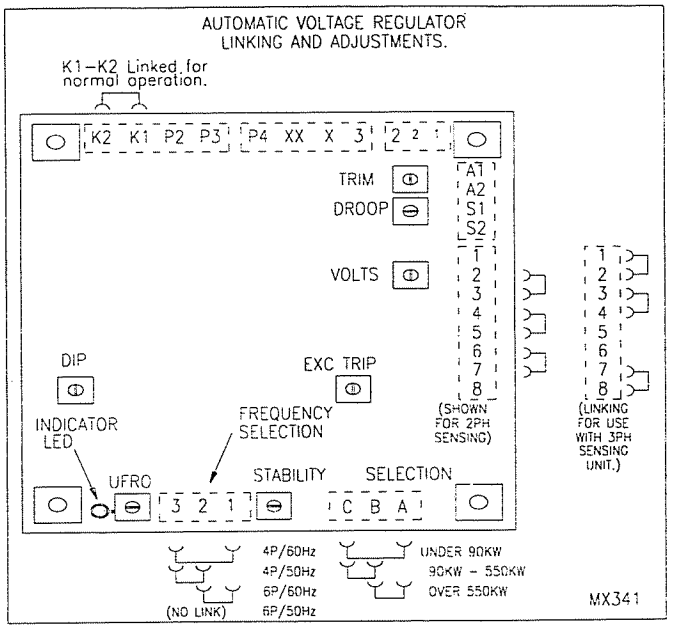

Fig. 9c

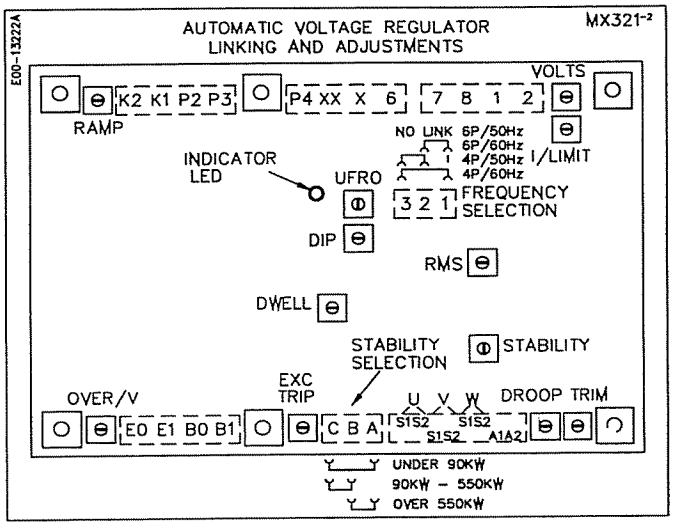

Fig. 9d

6.5 CURRENT LIMIT - MX321 AVR

These accessories work in conjunction with the AVR circuits to provide an adjustment to the level of current delivered into a fault. One current transformer (CT) per phase is fitted to provide current limiting on any line to line or line to neutral fault.

Note: The W phase CT can also provide "DROOP". Refer to 6.2.1.1 for setting droop independent of current limit.

Adjustment means is provided with the "I/LIMIT" control potentiometer on the AVR. Refer to Fig. 9d for location. If current limit transformers are supplied with the generator the limit will be set in accordance with the level specified at the time of order, and no further adjustment will be necessary. However, should the level need to be adjusted, refer to the setting procedure given in 6.5.1.

6.5.1 SETTING PROCEDURE

Run the generating set on no-load and check that engine governor is set to control nominal speed.

Stop the generating set. Remove the link between terminals K1-K2 at the auxiliary terminal block and connect a 5A switch across the terminals K1-K2.

Turn the "I/LIMIT" control potentiometer fully anticlockwise. Short circuit the stator winding with a bolted 3 phase short at the main terminals. An AC current clip-on ammeter is required to measure the winding lead current.

With the switch across K1-K2 open start the generating set.

Close the switch across K1-K2 and turn the "I/LIMIT" control potentiometer clockwise until required current level is observed on the clip-on ammeter. As soon as correct setting is achieved open the K1-K2 switch.

Should the current collapse during the setting procedure, the internal protective circuits of the AVR will have operated. In this event shut down the set and open the K1-K2 switch. Restart the set and run for 10 minutes with K1-K2 switch open, to cool the generator windings, before attempting to resume the setting procedure.

Important ! **Failure to carry out the correct COOLING procedure, may cause overheating and consequent damage to the generator windings.**

6.6 POWER FACTOR CONTROLLER (PFC3)

This accessory is primarily designed for those generator applications where operation in parallel with the mains supply is required.

Protection against loss of mains voltage or generator excitation is not included in the unit and the system designer must incorporate suitable protection.

The electronic control unit requires both droop and kVAr current transformers. When supplied with the generator, wiring diagrams inside the back cover of this manual show the conections and the additional instruction leaflet provided gives details of setting procedures for the power factor controller (PFC3).

The unit monitors the power factor of the generator current and adjusts excitation to maintain the power factor constant.

This mode can also be used to control the power factor of the mains if the point of current monitoring is moved to the mains cables. Refer to the factory for appropriate details.

It is also possible to operate the unit to control kVAr of the generator if required. Refer to the factory for appropriate details.

SECTION 7

SERVICE AND MAINTENANCE

Warning ! **Service and fault finding procedures present hazards which can result in severe personal injury or death. Only personnel qualified to perform electrical and mechanical service should carry out these procedures.**
Ensure engine starting circuits are disabled before commencing service or maintenance procedures. Isolate any anti-condensation heater supply.

As part of routine maintenance procedures, periodic attention to winding condition (particularly when generators have been idle for a long period) and bearings is recommended. (Refer to subsections 7.1 and 7.2 respectively).

7.1 WINDING CONDITION

The condition of the windings can be assessed by measurement of insulation resistance to earth.

Care should be taken when dealing with windings which are suspected of being excessively damp or dirty. The initial measurement of insulation resistance should be established using a low voltage (500V) megger type instrument and if manually powered the handle should initially be turned slowly.

Full megger tests or any other form of high voltage test should not be applied until the windings have been dried out and if necessary cleaned.

Caution ! **The AVR should be disconnected and the resistance temperature detector (R.T.D.) leads grounded during this test.**

Important ! **The windings have been H.V. tested during manufacture and further H.V. testing may degrade the insulation with consequent reduction in operating life. Should it be necessary to demonstrate H.V. testing, for customer acceptance, the tests must be carried out at reduced voltage levels i.e. (Test Voltage = 0.8 (2 X Rated Voltage + 1000).**

A 500V megger or similar instrument should be used.
Disconnect any earthing conductor connected between neutral and earth and megger an output lead terminal U, V or W to earth. The insulation resistance reading should be in excess of 1.0MΩ to earth. Should the insulation resistance be less than 1.0MΩ the winding must be dried out as detailed below.

The above insulation resistance value is quoted for windings at an ambient temperature of approximately 20°C.

It should be noted that as winding temperature increases, values of insulation resistance may significantly reduce. Therefore, the reference values for insulation resistance can only be established with windings at a temperature of approximately 20°C.

Should the values be less than quoted, drying out the generator windings is essential.
Drying out may be carried out by directing warm air from a fan heater or similar apparatus into the generator air inlets and/or outlets.

During drying, air must be able to flow freely through the generator in order to carry off the moisture.

Alternatively, the alternator main stator windings may be short circuited with a bolted 3 phase short at the main terminals and the generating set run with the AVR disconnected at terminals X and XX. A DC supply is connected to the leads X and XX (X must be connected to the positive of the DC supply and XX to the negative of the DC supply). The DC supply must be variable from 0-24V and capable of supplying 1.0 amp. An AC current clip-on ammeter or similar instrument is required to measure the main stator winding current.

Set the DC supply voltage to zero. Start the generating set and slowly increase the DC voltage to pass current through the main stator winding. The current level should not exceed the rated current of the generator.

Important ! **The short circuit must not be applied with the AVR connected in circuit.**
Current in excess of the rated generator current will cause damage to the windings.

During drying, the resistance should be measured at regular intervals, typically every 15 minutes and a graph plotted of insulation resistance against time. The shape of the resulting curve will be similar to Fig 1 below.

Fig 1 illustrates a typical curve for a generator which has absorbed a considerable amount of moisture. The curve indicates a temporary increase in resistance, a fall, and then a gradual rise to a steady figure. If windings are not very damp the dotted portion of the curve may not appear.

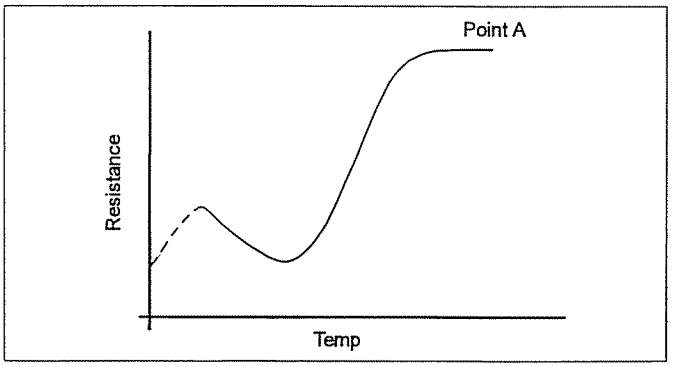

Fig. 10

Drying should be continued after point "A" has been reached for at least one hour.

Once the winding insulation resistance has been raised to the highest achievable level the I.R. (Insulation resistance) should be measured using a 500V megger or similar type instrument.

It is recommended that the main stator insulation resistance is checked as follows:-

1. Separate the three neutral leads.
2. ground V and W phase and megger U phase to ground
   ground U and W phase and megger V phase to ground
   ground U and V phase and megger W phase to ground

The generator must not be put into service if the following minimum values cannot be achieved.

INSULATION RESISTANCE	1.0 Meg Ohm

If the minimum value of I.R. cannot be achieved rewinding or refurbishment of the main stator winding will be necessary.

7.2 BEARINGS

All bearings are supplied sealed for life and are, therefore, not regreasable.

Important ! **The life of a bearing in service is subject to the working conditions and the environment.**

Important ! **Long stationary periods in an environment where there is vibration can cause false brinnelling which puts flats on the ball and grooves on the races.**
Very humid atmospheres or wet conditions can emulsify the grease and cause corrosion.

Important ! **High axial vibration from the engine or misalignment of the set will stress the bearing.**

The bearing, in service, is affected by a variety of factors that together will determine the bearing life. We recommend that the health of the bearings be monitored, using 'spike energy' vibration monitoring equipment. This will allow the timely replacement of bearings, that exhibit a deteriorating trend, during a major engine overhaul.

If excessive heat, noise or vibration is detected, change the bearing as soon as practicable. Failure to do so could result in bearing failure.

In the event that 'spike energy' vibration monitoring equipment is not available, it is strongly recommend that consideration be given to changing the bearing during each 'major engine overhaul'.

Belt driven application will impose an additional load on bearings. The bearing life will therefore be significantly affected. It is important that the side load limits given in SECTION 3 are not exceeded and the health of the bearing is monitored more closely.

7.3 AIR FILTERS

The frequency of filter maintenance will depend upon the severity of the site conditions. Regular inspection of the elements will be required to establish when cleaning is necessary.

7.3.1 CLEANING PROCEDURE



Danger !

Removal of filter elements enables access to LIVE parts.
Only remove elements with the generator out of service.

Remove the filter elements from the filter frames. Immerse or flush the element with a suitable detergent until the element is clean. Dry elements thoroughly before refitting.

7.4 FAULT FINDING

Important ! **Before commencing any fault finding procedure examine all wiring for broken or loose conections.**

Four types of excitation control system, involving four types of AVR, can be fitted to the range of generators covered by this manual. The systems can be identified by a combination of AVR type, where applicable, and the last digit of the generator frame size designation. Refer to the generator nameplate then proceed to the appropriate subsection as indicated below:-

DIGIT	EXCITATION CONTROL	SUBSECTION
6	SX460 AVR	7.4.1
4	SX440 AVR	7.4.2
4	SX421 AVR	7.4.3
5	Transformer control	7.4.4
3	MX341 AVR	7.4.5
3	MX321 AVR	7.4.6

7.4.1 SX460 AVR - FAULT FINDING

No voltage build-up when starting set	1. Check speed 2. Check residual voltage. Refer to subsection 7.4.7. 3. Follow Separate Excitation Test Procedure to check generator and AVR.
Unstable voltage either on no-load or with load	1. Check speed stability. 2. Check stability setting. Refer to subsection 4.6.
High voltage either on no-load or with load	1. Check speed. 2. Check that generator load is not capacitive (leading power factor).
Low voltage no-load	1. Check speed. 2. Check link 1-2 or external hand trimmer leads for continuity.
Low voltage on-load	1. Check speed. 2. Check UFRO setting. Refer to subsection 4.7.1.1. 3. Follow Separate Excitation Procedure to check generator and AVR. Refer to subsection 7.5.

Katolight Service - Master Repair Manual - Page 1040

7.4.2 SX440 AVR - FAULT FINDING

No voltage build-up when starting set.	1. Check link K1-K2 on auxiliary terminals. 2. Check speed. 3. Check residual voltage. Refer to subsection 7.4.7. 4. Follow Separate Excitation Test Procedure to check generator and AVR. Refer to subsection 7.5.
Unstable voltage either on no-load or with load.	1. Check speed stability. 2. Check stability setting. Refer to subsection 4.6.
High voltage either on no-load or with load	1. Check speed. 2. Check that generator load is not capacitive (leading power factor).
Low voltage no-load	1. Check speed. 2. Check link 1-2 or external hand trimmer leads for continuity.
Low voltage on-load	1. Check speed. 2. Check UFRO setting. Refer to subsection 4.7.1.1. 3. Follow Separate Excitation Procedure to check generator and AVR. Refer tosubsection 7.5.

7.4.3 SX421 AVR - FAULT FINDING

No voltage build-up when starting set	1. Check circuit breaker 'ON'. Refer to subsection 6.4.1. 2. Check speed. 3. Check residual voltage. Refer to subsection 7.4.7. 4. Follow Separate Excitation Procedure to check generator and AVR. Refer to subsection 7.5.
Unstable voltage either on no-load or with load	1. Check speed stability. 2. Check stability setting. Refer to subsection 4.6.
High voltage either on no-load or with load	1. Check speed. 2. Check link 1-2 or external hand trimmer leads for continuity. Check continuity of leads 7-8 and P3-P2 for continuity. 3. Check that generator load is not capacitive (leading power factor).
Low voltage no-load	1. Check speed. 2. Check link 1-2 or external hand trimmer leads for continuity.
Low voltage on-load	1. Check speed. 2. Check UFRO setting. Refer to subsection 4.7.1.1. 3. Follow Separate Excitation to check generator and AVR. Refer to subsection 7.5.
Excessive voltage/speed dip on-load switching	1. Check governor response. 2. Refer to generating set manual. Check 'DIP' setting. Refer to subsection 4.7.1.4.

7.4.4 TRANSFORMER CONTROL - FAULT FINDING

No voltage build-up when starting set	1. Check transformers rectifiers. 2. Check transformer secondary winding for open circuit.
Low volatge	1. Check speed. 2. Check transformer air gap setting. Refer to subsection 4.7.2.
High voltage	1. Check speed. 2. Check transformer air gap setting. Refer to subsection 4.7.2. 3. Check transformer secondary winding for short circuited turns.
Excessive voltage drop on-load	1. Check speed drop on-load. 2. Check transformer rectifiers. Check transformer air gap setting. Refer to subsection 4.7.2.

7.4.5 MX341 AVR - FAULT FINDING

No voltage build-up when starting set	1. Check link K1-K2 on auxiliary terminals. 2. Follow Separate Excitation Test Procedure to check machine and AVR. Refer to subsection 7.5.
Loss of voltage when set running	1. First stop and re-start set. If no voltage or voltage collapses after short time, follow Separate Excitation Test Procedure. Refer to subsection 7.5.
Generator voltage high followed by collapse	1. Check sensing leads to AVR. 2. Refer to Separate Excitation Test Procedure. Refer to subsection 7.5.
Voltage unstable either on no-load or with load	1. Check speed stability. 2. Check "STAB" setting. Refer to Load Testing section for procedure. Refer to subsection 4.6.
Low voltage on-load	1. Check speed. 2. If correct check "UFRO" setting. Refer to subsection 4.7.1.1.
Excessive voltage/speed dip on load switching	1. Check governor response. Refer to generating set manual. Check "DIP" setting. Refer to subsection 4.7.1.4.
Sluggish recovery on load switching	1. Check governor response. Refer to generating set manual.

7.4.6 MX321 AVR - FAULT FINDING

No voltage build-up when starting set	1. Check link K1-K2 on auxiliary terminals. Follow Separate Excitation Test Procedure to check machine and AVR. Refer to subsection 7.5.
Voltage very slow to build up	1. Check setting of ramp potentiometer. Refer to 4.7.1.5.
Loss of voltage when set running	1. First stop and re-start set. If no voltage or voltage collapses after short time, follow Separate Excitation Test Procedure. Refer to subsection 7.5.
Generator voltage high followed by collapse	1. Check sensing leads to AVR. 2. Refer to Separate Excitation Test Procedure. Refer to subsection 7.5.
Voltage unstable either on no-load or with load	1. Check speed stability. 2. Check "STAB" setting. Refer to Load Testing section for procedure. Refer to subsection 4.6.
Low voltage on-load	1. Check speed. 2. If correct check "UFRO" setting. Refer to subsection 4.7.1.1.
Excessive voltage/speed dip on load switching	1. Check governor responses. Refer to generating set manual. Check "DIP" setting. Refer to subsection 4.7.1.4.
Sluggish recovery on load switching	1. Check governor response. Refer to generating set manual. Check "DWELL" setting. Refer to Load Testing section 4.7.1.4.

7.4.7 RESIDUAL VOLTAGE CHECK

This procedure is applicable to generators with either SX460 or SX440 or SX421 AVR.

With the generator set stationary remove AVR access cover and leads X and XX from the AVR.

Start the set and measure voltage across AVR terminals 7-8 on SX460 AVR or P2-P3 on SX440 or SX421 AVR.

Stop the set, and replace leads X and XX on the AVR terminals.If the measured voltage was above 5V the generator should operate normally.

If the measured voltage was under 5V follow the proceedure below.

Using a 12 volt d. c. battery as a supply clip leads from battery negative to AVR terminal XX, and from battery positive through a diode to AVR terminal X. See Fig. 10.

Important! **A diode must be used as shown below to ensure the AVR is not damaged.**

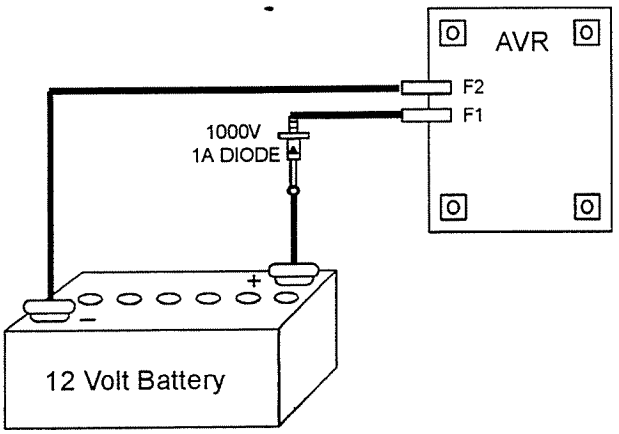

Fig. 11

Important! **If the generating set battery is used for field flashing the generator main stator neutral must be disconnected from earth.**

Restart the set and note output voltage from main stator, which should be approximately nominal voltage, or voltage at AVR terminals 7 and 8 on SX460, P2-P3 on SX440 or SX421 which should be between 170 and 250 volts.

Stop the set and unclip battery supply from terminals X and XX. Restart the set. The generator should now operate normally. If no voltage build-up is obtained it can be assumed a fault exists in either the generator or the AVR circuits. Follow the SEPARATE EXCITATION TEST PROCEDURE to check generator windings, rotating diodes and AVR. Refer to subsection 7.5.

7.5 SEPARATE EXCITATION TEST PROCEDURE

The generator windings, diode assembly and AVR can be checked using the appropriate following section.

7.5.1 GENERATOR WINDINGS, ROTATING DIODES and PERMANENT MAGNET GENERATOR (PMG).

7.5.2 EXCITATION CONTROL TEST.

7.5.1 GENERATOR WINDINGS, ROTATING DIODES and PERMANENT MAGNET GENERATOR (PMG)

Important! **The resistances quoted apply to a standard winding. For generators having windings or voltages other than those specified refer to factory for details. Ensure all disconnected leads are isolated and free from earth.**

Important! **Incorrect speed setting will give proportional error in voltage output.**

CHECKING PMG

Start the set and run at rated speed.

Measure the voltages at the AVR terminals P2, P3 and P4. These should be balanced and within the following ranges:-

50Hz generators - 170-180 volts
60Hz generators - 200-216 volts

Should the voltages be unbalanced stop the set, remove the PMG sheet metal cover from the non drive endbracket and disconnect the multipin plug in the PMG output leads. Check leads P2, P3, P4 for continuity. Check the PMG stator resistances between output leads. These should be balanced and within +/-10% of 2.3 ohms. If resistances are unbalanced and/or incorrect the PMG stator must be replaced. If the voltages are balanced but low and the PMG stator winding resistances are correct - the PMG rotor must be replaced.

CHECKING GENERATOR WINDINGS AND ROTATING DIODES

This procedure is carried out with leads X and XX disconnected at the AVR or transformer control rectifier bridge and using a 12 volt d.c. supply to leads X and XX.

Start the set and run at rated speed.

Measure the voltages at the main output terminals U, V and W. If voltages are balanced and within +/-10% of the generator nominal voltage, refer to 7.5.1.1.

Check voltages at AVR terminals 6, 7 and 8. These should be balanced and between 170-250 volts.

If voltages at main terminals are balanced but voltage at 6, 7 and 8 are unbalanced, check continuity of leads 6, 7 and 8. Where an isolating transformer is fitted (MX321 AVR) check transformer windings. If faulty the transformer unit must be replaced.

If voltages are unbalanced, refer to 7.5.1.2.

7.5.1.1 BALANCED MAIN TERMINAL VOLTAGES

If all voltages are balanced within 1% at the main terminals, it can be assumed that all exciter windings, main windings and main rotating diodes are in good order, and the fault is in the AVR or transformer control. Refer to subsection 7.5.2 for test procedure.

If voltages are balanced but low, there is a fault in the main excitation windings or rotating diode assembly. Proceed as follows to identify:-

Katolight Service - Master Repair Manual - Page 1043

Rectifier Diodes

The diodes on the main rectifier assembly can be checked with a multimeter. The flexible leads connected to each diode should be disconnected at the terminal end, and the forward and reverse resistance checked. A healthy diode will indicate a very high resistance (infinity) in the reverse direction, and a low resistance in the forward direction. A faulty diode will give a full deflection reading in both directions with the test meter on the 10,000 ohms scale, or an infinity reading in both directions.

On an electronic digital meter a healthy diode will give a low reading in one direction, and a high reading in the other.

Replacement of Faulty Diodes

The rectifier assembly is split into two plates, the positive and negative, and the main rotor is connected across these plates. Each plate carries 3 diodes, the negative plate carrying negative biased diodes and the positive plate carrying positive biased diodes. Care must be taken to ensure that the correct polarity diodes are fitted to each respective plate. When fitting the diodes to the plates they must be tight enough to ensure a good mechanical and electrical contact, but should not be overtightened. The recommended torque tightening is 4.06 - 4.74Nm (36-42lb in).

Surge Suppressor

The surge suppressor is a metal-oxide varistor connected across the two rectifier plates to prevent high transient reverse voltages in the field winding from damaging the diodes. This device is not polarised and will show a virtually infinite reading in both directions with an ordinary resistance meter. If defective this will be visible by inspection, since it will normally fail to short circuit and show signs of disintegration. Replace if faulty.

Main Excitation Windings

If after establishing and correcting any fault on the rectifier assembly the output is still low when separately excited, then the main rotor, exciter stator and exciter rotor winding resistances should be checked (see Resistance Charts), as the fault must be in one of these windings. The exciter stator resistance is measured across leads X and XX. The exciter rotor is connected to six studs which also carry the diode lead terminals. The main rotor winding is connected across the two rectifier plates. The respective leads must be disconnected before taking the readings.

Resistance values should be within +/-10% of the values given in the table below:-

Frame Size	Main Rotor	Exciter Stator			Exciter Rotor
		Type 1	Type 2*	Type 3**	
UC22C	0.59	21	28	138	0.142
UC22D	0.64	21	28	138	0.142
UC22E	0.69	20	30	155	0.156
UC22F	0.83	20	30	155	0.156
UC22G	0.94	20	30	155	0.156
UC27C	1.14	20	-	-	0.156
UC27D	1.25	20	-	-	0.156
UC27E	1.4	20	-	-	0.182
UC27F	1.6	20	-	-	0.182
UC27G	1.76	20	-	-	0.182
UC27H	1.92	20	-	-	0.182
UC27J	2.2	20	-	-	0.182

* Used with 1 phase transformer controlled 3 phase or 1 phase generators.

** Used with 3 phase transformer controlled 3 phase generators.

7.5.1.2 UNBALANCED MAIN TERMINAL VOLTAGES

If voltages are unbalanced, this indicates a fault on the main stator winding or main cables to the circuit breaker. NOTE: Faults on the stator winding or cables may also cause noticeable load increase on the engine when excitation is applied. Disconnect the main cables and separate the winding leads U1-U2, U5-U6, V1-V2, V5-V6, W1-W2, W5-W6 to isolate each winding section. (U1-L1, U2-L4 on single phase generators).

Measure each section resistance - values should be balanced and within +/-10% of the value given below:-

AVR CONTROLLED GENERATORS				
Frame Size	SECTION RESISTANCES			
	Winding 311	Winding 17	Winding 05	Winding 06
UC22C	0.09	0.14	0.045	0.03
UC22D	0.065	0.1	0.033	0.025
UC22E	0.05	0.075	0.028	0.02
UC22F	0.033	0.051	0.018	0.012
UC22G	0.028	0.043	0.014	0.01
UC27C	0.03	0.044	-	-
UC27D	0.023	0.032	-	-
UC27E	0.016	0.025	-	-
UC27F	0.012	0.019	-	-
UC27G	0.011	0.013	-	-
UC27H	0.08	0.014	-	-
UC27J	0.07	0.012	-	-

TRANSFORMER CONTROLLED GENERATORS					
Frame Size	SECTION RESISTANCES, 3 PHASE WINDINGS				
	380V	400V	415V	416V	460V
	50Hz	50Hz	50Hz	60Hz	60Hz
UC22C	0.059	0.078	0.082	0.055	0.059
UC22D	0.054	0.056	0.057	0.049	0.054
UC22E	0.041	0.05	0.053	0.038	0.041
UC22F	0.031	0.031	0.033	0.025	0.031
UC22G	0.022	0.026	0.028	0.021	0.022

Measure insulation resistance between sections and each section to earth.

Unbalanced or incorrect winding resistances and/or low insulation resistances to earth indicate rewinding of the stator will be necessary. Refer to removal and replacement of component assemblies subsection 7.5.3.

7.5.2 EXCITATION CONTROL TEST
7.5.2.1 AVR FUNCTION TEST

All types of AVR's can be tested with this procedure:

1. Remove exciter field leads X & XX (F1 & F2) from the AVR terminals X & XX (F1 & F2).
2. Connect a 60W 240V household lamp to AVR terminals X & XX (F1 & F2).
3. Set the AVR VOLTS control potentiometer fully clockwise.
4. Connect a 12V, 1.0A DC supply to the exciter field leads X & XX (F1 & F2) with X (F1) to the positive.

5. Start the generating set and run at rated speed.

6. Check that the generator output voltage is within +/-10% of rated voltage.

Voltages at AVR terminals 7-8 on SX460 AVR or P2-P3 on SX440 or SX421 AVR should be between 170 and 250 volts. If the generator output voltage is correct but the voltage on 7-8 (or P2-P3) is low, check auxiliary leads and connections to main terminals.

Voltages at P2, P3, P4 terminals on MX341 and MX321 should be as given in 7.5.1.

The lamp connected across X-XX should glow. In the case of the SX460, SX440 and SX421 AVRs the lamp should glow continuously. In the case of the MX341 and MX321 AVRs the lamp should glow for approximately 8 secs. and then turn off. Failure to turn off indicates faulty protection circuit and the AVR should be replaced. Turning the "VOLTS" control potentiometer fully anti-clockwise should turn off the lamp with all AVR types.

Should the lamp fail to light the AVR is faulty and should be replaced.

Important ! **After this test turn VOLTS control potentiometer fully anti-clockwise.**

7.5.2.2 TRANSFORMER CONTROL

The transformer rectifier unit can only be checked by continuity, resistance checks and insulation resistance measurement.

Two phase transformer

Separate primary leads T1-T2-T3-T4 and secondary leads 10-11. Examine windings for damage. Measure resistances across T1-T3 and T2-T4. These will be a low value but should be balanced. Check that there is resistance in the order of 8 ohms between leads 10 and 11. Check insulation resistance of each winding section to earth and to other winding sections.

Low insulation resistance, unbalanced primary resistance, open or short circuited winding sections, indicates the transformer unit should be replaced.

Three phase transformer

Separate primary leads T1-T2-T3 and secondary leads 6-7-8 and 10-11-12.

Examine windings for damage. Measure resistances across T1-T2, T2-T3, T3-T1. These will be low but should be balanced. Check that resistances are balanced across 6-10, 7-11 and 8-12 and in the order of 18 ohms.

Check insulation resistance of each winding section to earth and to other winding sections.

Low insulation resistance, unbalanced primary or secondary winding resistances, open or short circuited winding sections indicates the transformer unit should be replaced.

Rectifier units - Three phase and single phase

With the leads 10-11-12-X and XX removed from the rectifier unit (lead 12 is not fitted on single phase transformer rectifier units), check forward and reverse resistances between terminals 10-X, 11-X, 12-X, 10-XX, 11-XX and 12-XX with a multimeter.

A low forward resistance and high reverse resistance should be read between each pair of terminals. If this is not the case the unit is faulty and should be replaced.

7.5.3 REMOVAL AND REPLACEMENT OF COMPONENT ASSEMBLIES

METRIC THREADS ARE USED THROUGHOUT

Caution ! **When lifting single bearing generators, care is needed to ensure the generator frame is kept in the horizontal plane. The rotor is free to move in the frame and can slide out if not correctly lifted. Incorrect lifting can cause serious personal injury.**

7.5.3.1 REMOVAL OF PERMANENT MAGNET GENERATOR (PMG)

1. Remove 4 screws holding the sheet metal cylindrical cover at the non-drive end and remove the cover.

2. Disconnect the in line connector from the PMG stator (3 wires go to this connector). It may be necessary to cut off the nylon cable tie first.

3. Remove the 4 threaded pillars and clamps holding the PMG stator onto the end bracket.

4. Tap the stator out of the 4 spigots and withdraw. The highly magnetic rotor will attract the stator. Take care to avoid contact which may damage the windings.

5. Remove the bolt in the centre from the rotor shaft and pull off the rotor. It may be necessary to gently tap the rotor away. Take care to tap gently and evenly - the rotor has ceramic magnets which are easily broken by shock.

Important ! **The rotor assembly must not be dismantled.**

Replacement is a reversal of the above procedure.

7.5.3.2 REMOVAL OF BEARINGS

Important ! **Position the main rotor so that a full pole face of the main rotor core is at the bottom of the stator bore.**

NOTE: Removal of the bearings may be effected either after the rotor assembly has been removed OR more simply by removal of endbracket(s). Refer to 7.5.3.3. and 7.5.3.4.

The bearings are pre-packed with grease and sealed for life.

The bearing(s) are a press fit and can be removed from the shaft with 3 leg or 2 leg manual or hydraulic bearing pullers.

SINGLE BEARING ONLY: Before trying to pull off the bearing remove the small circlip retaining it.

When fitting new bearings use a bearing heater to expand the bearing before fitting to the shaft. Tap the bearing into place ensuring that it contacts the shoulder on the shaft.

Refit the retaining circlip on single bearing generators.

7.5.3.3 REMOVAL OF ENDBRACKET AND EXCITER STATOR

1. Remove exciter leads X+, XX- at the AVR.

2. Slacken 4 bolts (2 each side) situated on horizontal centre line holding the terminal box.

3. Remove 2 bolts holding lifting lug, at the non-drive end, and remove lug.

4. Remove sheet metal cylindrical cover (4 screws) over PMG (if fitted)
   or
   Remove shallow sheet metal cover (4 screws) at the non-drive end.

5. Ease up the terminal box and support clear of the non-drive endbracket.

6. Remove 6 bolts holding the non-drive endbracket to the stator bar assembly. The endbracket is now ready for removal.

7. Replace the lifting lug onto the endbracket and sling the endbracket on a hoist to facilitate lifting.

8. Tap the endbracket around its perimeter to release from the generator. The endbracket and exciter stator will come away as a single assembly.

9. Remove the 4 screws holding the exciter stator to the endbracket and gently tap the exciter stator to release it. Replacement is a reversal of the above procedure.

7.5.3.4 REMOVAL OF THE ROTOR ASSEMBLY

Remove the permanent magnet generator. Refer to 7.5.3.1
or
Remove the four screws holding the sheet metal cover at the non drive end and remove cover.

Caution !	**With the PMG rotor removed single bearing generator rotors are free to move in the frame. Ensure frame is kept in the horizontal plane when lifting.**

TWO BEARING GENERATORS

1. Remove 2 screws holding the sheet metal cover around the adaptor at the drive end and remove the cover.

2. Remove the bolts holding the adaptor to the endbracket at the drive end.

3. Tap off the adaptor. It may be preferred to sling the adaptor first depending on its size and weight.

4. Remove the screens and louvres (if fitted) at each side on the drive end.

Now ensure that the rotor is positioned with a full pole face at the bottom centre line. This is to avoid damage to the bearing exciter, or rotor winding, by limiting the possible rotor downward movement to the air gap length.

5. Remove 6 bolts holding drive endbracket onto adaptor ring DE. The boltheads face towards the non-drive end. The top bolt passes through the centre of the lifting lug.

6. Tap the drive endbracket away from the adaptor ring DE and withdraw the endbracket.

7. Ensure the rotor is supported at the drive end on a sling.

8. Tap the rotor from the non-drive end to push the bearing clear of the endbracket and its position within an 'O' ring.

9. Continue to push the rotor out of the stator bore, gradually working the sling along the rotor as it is withdrawn, to ensure that it is fully supported all the time.

SINGLE BEARING GENERATORS

1. Remove the screws, screens and louvres (if fitted) at each side on drive end adaptor.

2. **UCI224, UCI274, UCM224, UCM274, UCD274 Only**

   Remove 6 bolts holding the adaptor at the drive end. It may be preferred to sling the adaptor on a hoist. The bolt heads face towards the non-drive end. The top bolt passes through the centre of the lifting lug.

2a. **UCD224 Only**

   Remove 6 bolts holding the adaptor at the drive end. It may be preferred to sling the adaptor on a hoist.

3. **UCI224, UCI274, UCM224, UCM274, UCD274 Only**

   Tap the adaptor away from stator bar adaptor ring.

3a. **UCD224 Only**

   Tap the adaptor away from stator bar assembly.

ALL SINGLE BEARING GENERATORS

4. Ensure the rotor is supported at drive end on a sling.

5. Tap the rotor from the non-drive end to push the bearing clear of the endbracket and its position within an 'O' ring.

6. Continue to push the rotor out of the stator bore, gradually working the sling along the rotor as it is withdrawn, to ensure that it is fully supported at all times.

Replacement of rotor assemblies is a reversal of the procedures above.

Before commencing re-assembly, components should be checked for damage and bearing(s) examined for loss of grease.

Fitting of new bearing(s) is recommended during major overhaul.

Before replacement of a single bearing rotor assembly, check that the drive discs are not damaged, cracked or showing other signs of fatigue. Also check that the holes in the discs for drive fixing screws are not elongated.

Damaged or worn components must be replaced.

Caution !	**When major components have been replaced, ensure that all covers and guards are securely fitted, before the generator is put into service.**

7.6 RETURNING TO SERVICE

After rectification of any faults found, remove all test connections and reconnect all control system leads.
Restart the set and adjust VOLTS control potentiometer on AVR controlled generators by slowly turning clockwise until rated voltage is obtained.

Refit all terminal box covers/access covers and reconnect heater supply.

Caution !	**Failure to refit all guards, access covers and terminal box covers can result in personal injury of death.**

SECTION 8

SPARES AND AFTER SALES SERVICE

8.1 RECOMMENDED SPARES

Service parts are conveniently packaged for easy identification. Genuine parts may be recognised by the Nupart name.

We recommend the following for Service and Maintenance. In critical applications a set of these service spares should be held with the generator.

AVR Controlled Generators

1.	Diode Set (6 diodes with surge suppressor)		RSK	2001
2.	AVR SX440		E000	24030
	AVR SX460		E000	24602
	AVR SX421		E000	24210
	AVR MX321		E000	23212
	AVR MX341		E000	23410
3.	Non drive end Bearing	UC22	051	01032
		UC27	051	01049
4.	Drive end Bearing	UC22	051	01044
		UC27	051	01050

Transformer Controlled Generators (UC22 Only)

1.	Diode Set (6 diodes with surge suppressor)		RSK	2001
2.	Diode Assembly		E000	22006
3.	Non drive end Bearing	UC22	051	01032
4.	Drive end Bearing	UC22	051	01044

When ordering parts the machine serial number or machine identity number and type should be quoted, together with the part description. For location of these numbers see paragraph 1.3.

Orders and enquiries for parts should be addressed to:

Newage International Limited
Nupart Department
PO Box 17, Barnack Road
STAMFORD
Lincolnshire
PE9 2NB
ENGLAND

Telephone: 44 (0) 1780 484000
Fax: 44 (0) 1780 766074

Or any of our subsidiary companies listed on the back cover.

8.2 AFTER SALES SERVICE

A full technical advice and on-site service facility is available from our Service Department at Stamford or through our Subsidiary Companies. A repair facility is also available at our Stamford Works.

PARTS LIST
TYPICAL SINGLE BEARING GENERATOR

Plate Ref.	Description	Plate Ref.	Description
1	Stator	25	Main Rectifier Assembly - Reverse
2	Rotor	26	Varistor
3	Exciter Rotor	27	Diode - Forward Polarity
4	Exciter Stator	28	Diode - Reverse Polarity
5	N.D.E. Bracket	29	Lifting Lug - D.E.
6	Cover N.D.E.	30	Lifting Lug - N.D.E.
7	Bearing 'O' Ring N.D.E.	31	Frame to Endbracket Adaptor Ring
8	Bearing N.D.E.	32	Main Terminal Panel
9	Bearing Circlip N.D.E.	33	Terminal Link
10	D.E. Bracket/Engine Adaptor	34	Edging Strip
11	D.E. Screen	35	Fan
12	Coupling Disc	36	Foot Mounting Spacer
13	Coupling Bolt	37	Cap Screw
14	Foot	38	AVR Access Cover
15	Frame Cover Bottom	39	AVR Anti-Vibration Mounting Assembly
16	Frame Cover Top	40	Auxiliary Terminal Assembly
17	Air Inlet Cover		
18	Terminal Box Lid		
19	Endpanel D.E.		
20	Endpanel N.D.E.		
21	AVR		
22	Side Panel		
23	AVR Mounting Bracket		
24	Main Rectifier Assembly - Forward		

N.D.E.	Non Drive End
D.E.	Drive End
PMG	Permanent Magnet Generator
AVR	Automatic Voltage Regulator

Fig. 11.
TYPICAL SINGLE BEARING GENERATOR

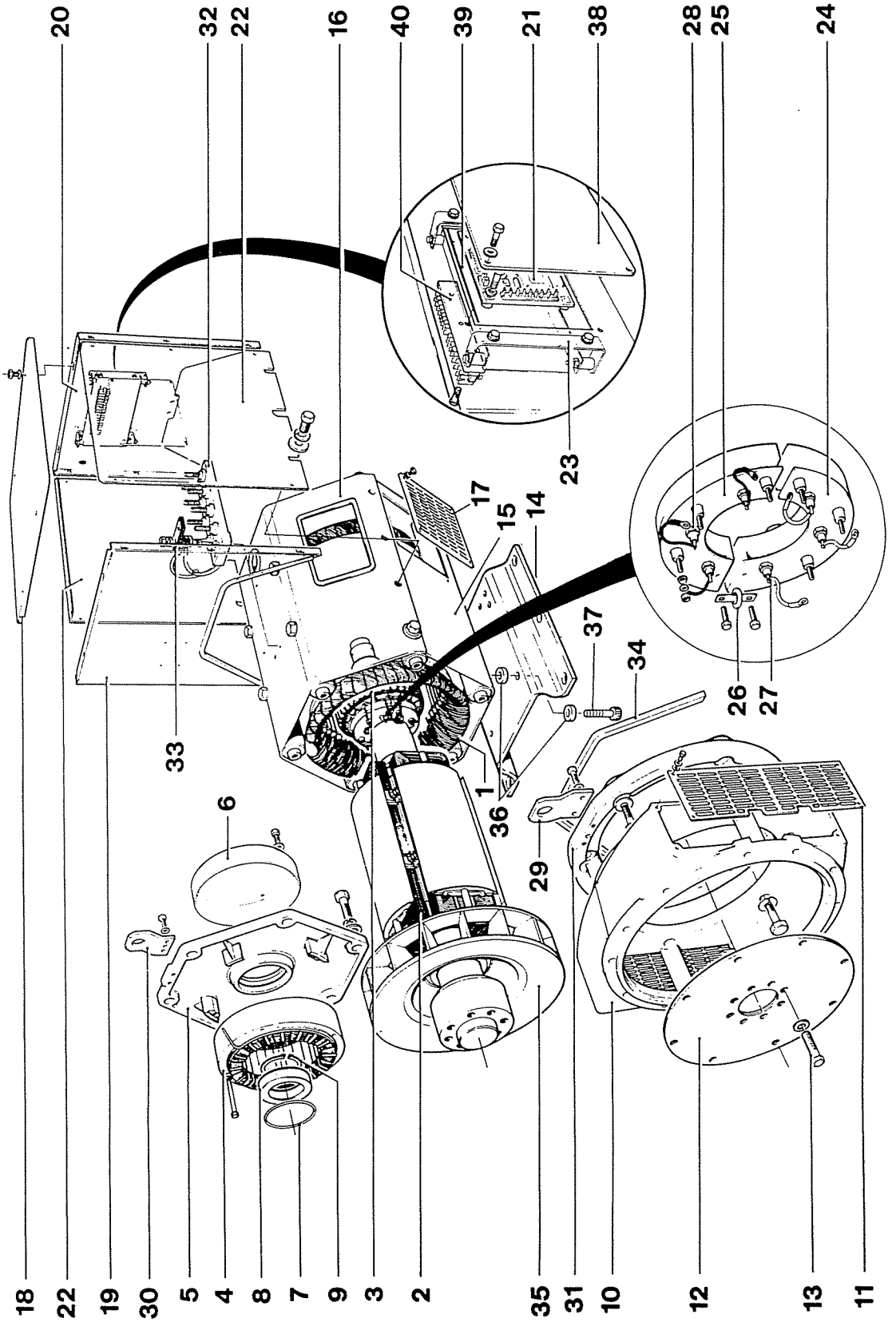

PARTS LIST
TYPICAL TWO BEARING GENERATOR

Plate Ref.	Description	Plate Ref.	Description
1	Stator	25	Main Rectifier Assembly - Reverse
2	Rotor	26	Varistor
3	Exciter Rotor	27	Diode - Forward Polarity
4	Exciter Stator	28	Diode - Reverse Polarity
5	N.D.E. Bracket	29	Lifting Lug - D.E.
6	Cover N.D.E.	30	Lifting Lug - N.D.E.
7	Bearing 'O' Ring N.D.E.	31	Frame to Endbracket Adaptor Ring
8	Bearing N.D.E.	32	Main Terminal Panel
9	Bearing Wave Washer D.E.	33	Terminal Link
10	D.E. Bracket	34	Edging Strip
11	D.E. Screen	35	Fan
12	Bearing D.E.	36	Foot Mounting Spacer
14	Foot	37	Cap Screw
15	Frame Cover Bottom	38	AVR Access Cover
16	Frame Cover Top	39	AVR Anti-Vibration Mount
17	Air Inlet Cover	40	Auxiliary Terminal Assembly
18	Terminal Box Lid	42	PMG Exciter Rotor
19	Endpanel D.E.	43	PMG Exciter Stator
20	Endpanel N.D.E.	44	PMG Bolt
21	AVR	45	PMG Pillar
22	Side Panel	46	PMG Clamp
23	AVR Mounting Bracket	47	PMG Dowel
24	Main Rectifier Assembly - Forward		

N.D.E.	Non Drive End
D.E.	Drive End
PMG	Permanent Magnet Generator
AVR	Automatic Voltage Regulator

Fig. 12.
TYPICAL TWO BEARING GENERATOR

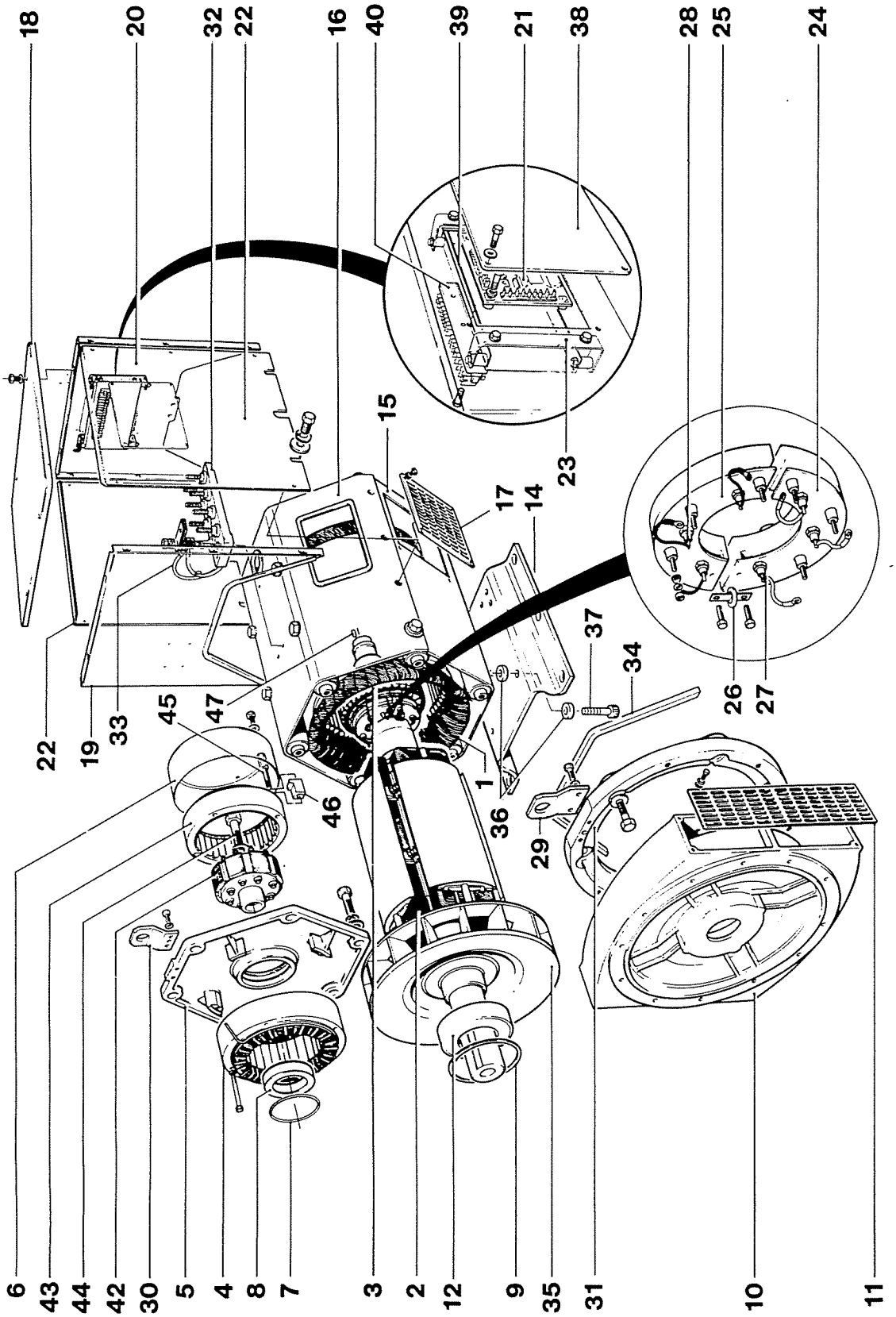

PARTS LIST
TYPICAL TWO BEARING (SERIES 5) GENERATOR

Plate Ref.	Description	Plate Ref.	Description
1	Stator	25	Main Rectifier Assembly - Reverse
2	Rotor	26	Varistor
3	Exciter Rotor	27	Diode - Forward Polarity
4	Exciter Stator	28	Diode - Reverse Polarity
5	N.D.E. Bracket	29	Lifting Lug - D.E.
6	Cover N.D.E.	30	Lifting Lug - N.D.E.
7	Bearing 'O' Ring N.D.E.	31	Frame to Endbracket Adaptor Ring
8	Bearing N.D.E.	32	Main Terminal Panel
9	Bearing Wave Washer D.E.	33	Terminal Link
10	D.E. Bracket	34	Edging Strip
11	D.E. Screen	35	Fan
12	Bearing D.E.	36	Foot Mounting Spacer
13		37	Cap Screw
14	Foot		
15	Frame Cover Bottom		
16	Frame Cover Top		
17	Air Inlet Cover		
18	Terminal Box Lid		
19	Endpanel D.E.		
20	Endpanel N.D.E.		
21	Series 5 Control Gear		
22	Side Panel		
23			
24	Main Rectifier Assembly - Forward		

N.D.E. Non Drive End
D.E. Drive End

Fig. 13.
TYPICAL TWO BEARING (SERIES 5) GENERATOR

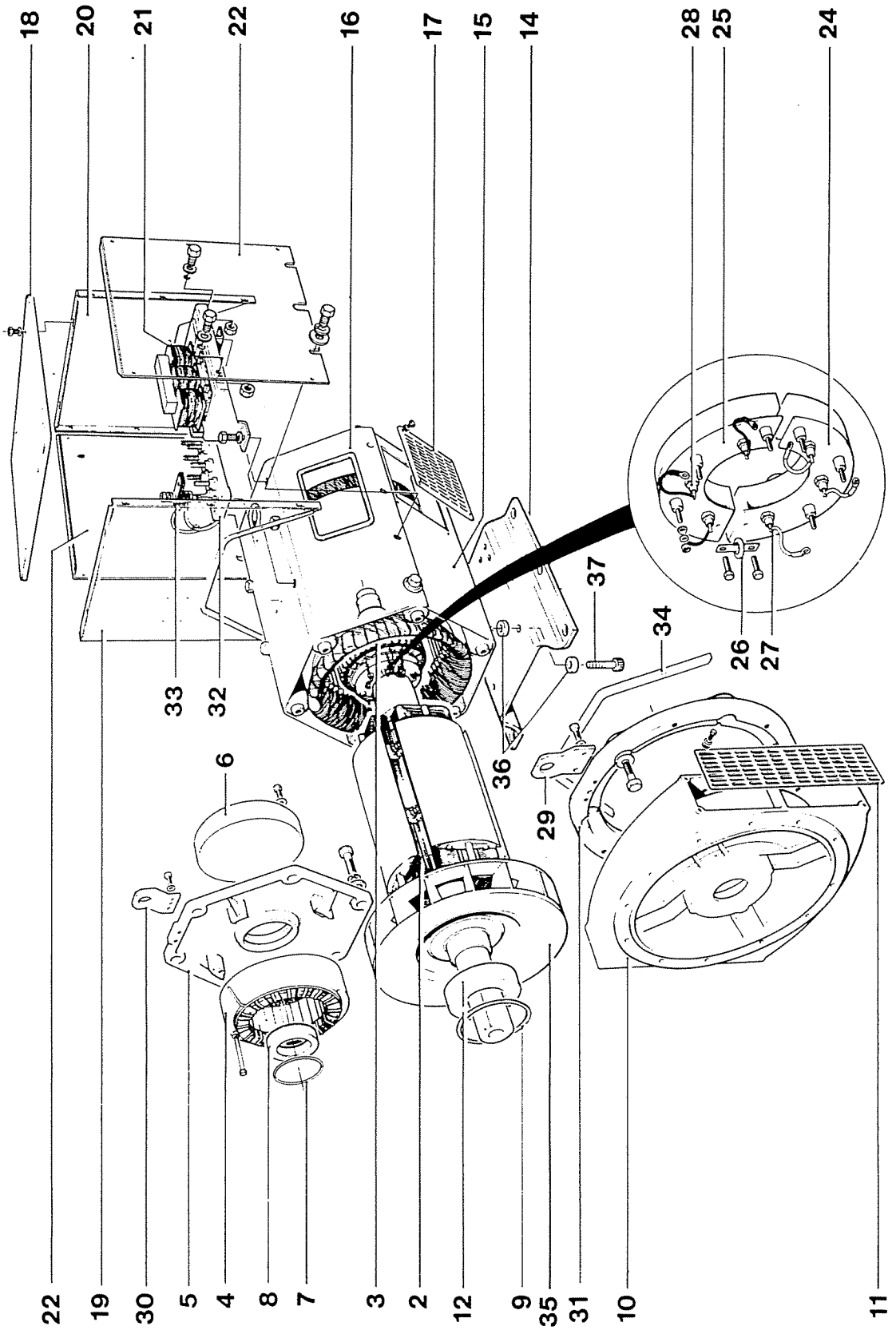

Fig. 14.
ROTATING RECTIFIER ASSEMBLY

Diode Leads & Exciter Rotor Leads fitted as shown on assembly

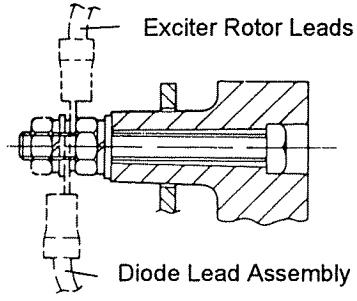

Scrap Section A-A

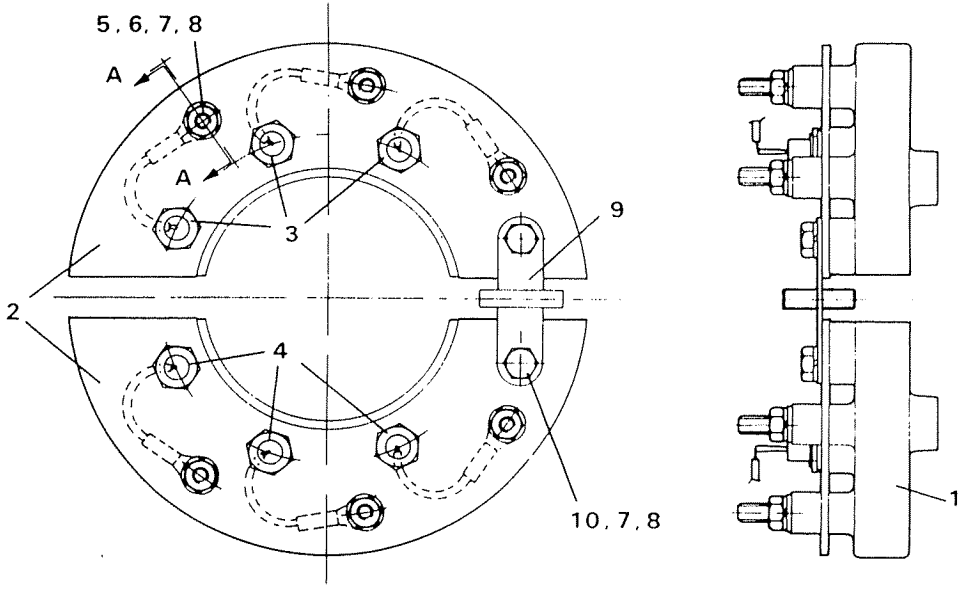

Plate Ref.	Description	Qty
1	Hub	1
2	Fin	2
3	Diode (fwd)	3
4	Diode (rev)	3
5	Hx. Screw	6
6	Hx. Nut	6
7	Pl. Washer	8
8	SC. L/Washer	8
9	Varistor	1
10	Hx. Screw	2

NOTES:
Fitting of Diodes.

1. Underside of diodes to be smeared with Midland Silicone 'Heat Sink' compound type MS2623. This compound **must not** be applied to the diode threads.
2. Diodes to be tightened to a torque of 2.03 - 2.37 Nm.
3. For Nupart rectifier service kit see page 28.

This manual is available in the following languages on request:
English, French, German, Italian and Spanish.

Denne manual er til rådighed på følgende sprog: engelsk, fransk, tysk, italiensk og spansk.

Denne håndboken er tilgjengelig på de følgende språkene: engelsk, fransk, tysk, italiensk og spansk.

Sur simple demande, ce manuel vous sera fourni dans l'une des langues suivantes: anglais, français, allemand, italien, espagnol.

Dieses Handbuch ist auf Anfrage in den folgenden Sprachen erhältlich: Englisch, Französisch, Deutsch, Italienisch, Spanisch.

Deze handleiding is op verzoek leverbaar in de volgende talen: Engels, Frans, Duits, Italiaans, Spaans.

Este manual pode também ser obtido nas seguintes línguas: inglês, francês, alemão, italiano e espanhol.

Tämä käsikirja on saatavissa pyynnöstä seuraavilla kielillä: Englanti, ranska, saksa, italia, espanja.

Il presente manuale è disponibile, su richiesta, nelle seguenti lingue: inglese, francese, tedesco, italiano e spagnolo.

Este manual también puede solicitarse en los siguientes idiomas: inglés, francés, alemán, italiano e español.

Αυτό το εγχειρίδιο οδηγιών χρήσεως διατίθεται στις ακόλουθες γλώσσες κατόπιν αιτήσενς: Αγγλικά, Γαλλικά Γερμανικά, Ιταλικά, Ισπανικά.

A.C. GENERATOR WARRANTY

WARRANTY PERIOD

A.C. Generators

In respect of a.c. generators the Warranty Period is eighteen months from the date when the goods have been notified as ready for despatch by N.I. or twelve months from the date of first commissioning (whichever is the shorter period).

DEFECTS AFTER DELIVERY

We will make good by repair or, at our option, by the supply of a replacement, any fault which under proper use appears in the goods within the period specified on Clause 12, and is found on examination by us to be solely due to defective material and workmanship; provided that the defective part is promptly returned, carriage paid, with all identification numbers and marks intact, or our works or, if appropriate to the Dealer who supplied the goods.

Any part repaired or replaced, under warranty, will be returned by N.I. free of charge (via sea freight if outside the UK).

We shall not be liable for any expenses which may be incurred in removing or replacing any part sent to us for inspection or in fitting any replacement supplied by us. We shall be under no liability for defects in any goods which have not been properly installed in accordance with N.I. recommended installation practices as detailed in the publications 'N.I. Installation, Service and Maintenance Manual' and 'N.I. Application Guidelines', or which have been improperly stored or which have been repaired, adjusted or altered by any person except ourselves or our authorised agents, or in any second-hand goods, proprietary articles or goods not of our own manufacture although supplied by us, such articles and goods being covered by the warranty (if any) given by the separate manufacturers.

Any claim under this clause must contain fully particulars of the alleged defect, the description of the goods, the date of purchase, and the name and address of the Vendor, the Serial Number (as shown on the manufacturers identification plate) or for Spares the order reference under which the goods were supplied.

Our judgement in all cases of claims shall be final and conclusive and the claimant shall accept our decision on all questions as to defects and the exchange of a part or parts.

Our liability shall be fully discharged by either repair or replacement as above, and in any event shall not exceed the current list price of the defective goods.

Our liability under this clause shall be in lieu of any warranty or condition implied by law as to the quality or fitness for any particular purpose of the goods, and save as expressly provided in this clause we shall not be under any liability, whether in contract, tort or otherwise, in respect of defects in goods delivered or for any injury, damages or loss resulting from such defects or from any work undone in connection therewith.

MACHINE SERIAL NUMBER

NEWAGE INTERNATIONAL LIMITED

REGISTERED OFFICE AND ADDRESS:
PO BOX 17
BARNACK ROAD
STAMFORD
LINCOLNSHIRE
PE9 2NB ENGLAND

Telephone: 44 (0) 1780 484000
Fax: 44 (0) 1780 484100
Web site: www.newagestamford.com

SUBSIDIARY COMPANIES

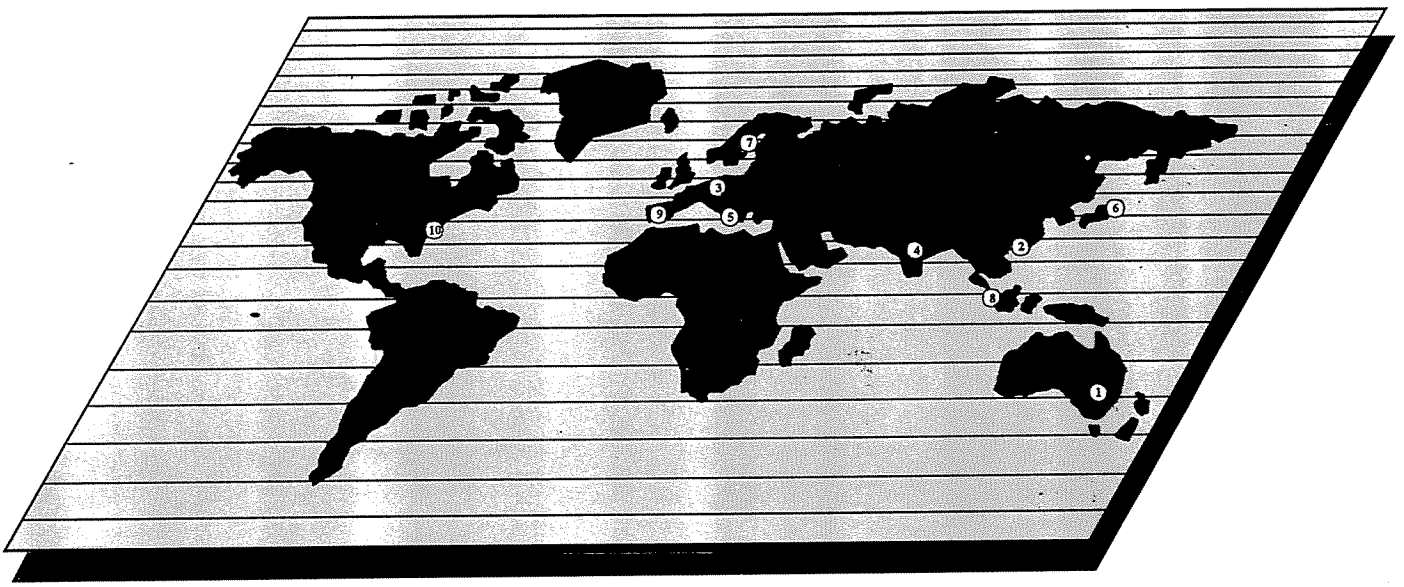

1 AUSTRALIA: NEWAGE ENGINEERS PTY. LIMITED
PO Box 6027, Baulkham Hills Business Centre,
Baulkham Hills NSW 2153.
Telephone: Sydney (61) 2 9680 2299
Fax: (61) 2 9680 1545

2 CHINA: WUXI NEWAGE ALTERNATORS LIMITED
Plot 49-A, Xiang Jiang Road
Wuxi High - Technical Industrial Dev. Zone
Wuxi, Jiangsu 214028
PR of China
Tel: (86) 510 5216212
Fax: (86) 510 5217673

3 GERMANY: NEWAGE ENGINEERS G.m.b.H.
Rotenbrückenweg 14, D-22113 Hamburg.
Telephone: Hamburg (49) 40 714 8750
Fax: (49) 40 714 87520

4 INDIA: C.G. NEWAGE ELECTRICAL LIMITED
C33 Midc, Ahmednagar 414111, Maharashtra.
Telephone: (91) 241 778224
Fax: (91) 241 777494

5 ITALY: NEWAGE ITALIA S.r.l.
Via Triboniano, 20156 Milan.
Telephone: Milan (39) 02 380 00714
Fax: (39) 02 380 03664

6 JAPAN: NEWAGE INTERNATIONAL JAPAN
8 - 5 - 302 Kashima
Hachioji-shi
Tokyo, 192-03
Telephone: (81) 426 77 2881
Fax: (81) 426 77 2884

7 NORWAY: NEWAGE NORGE A/S
Økern Naeringspark, Kabeigt. 5
Postboks 28, Økern, 0508 Oslo
Telephone: Oslo (47) 22 97 44 44
Fax: (47) 22 97 44 45

8 SINGAPORE: NEWAGE ASIA PACIFIC PTE LIMITED
10 Toh Guan Road #05-03
TT International Tradepark
Singapore 608838
Telephone: Singapore (65) 794 3730
Fax: (65) 898 9065
Telex: RS 33404 NEWAGE

9 SPAIN: STAMFORD IBERICA S.A.
Ctra. Fuenlabrada-Humanes, km.2
Poligono Industrial "Los Linares"
C/Pico de Almanzor, 2
E-28970 HUMANES DE MADRID (Madrid)
Telephone: Madrid (34) 91 604 8987/8928
Fax: (34) 91 604 81 66

10 U.S.A.: NEWAGE LIMITED
4700 Main St, N.E.
Fridley
Minnesota 55421
Telephone: (1) 800 367 2764
Fax: (1) 800 863 9243

© 1998 Newage International Limited.
Printed in England.

INSTRUCTION MANUAL
FOR

VOLTAGE REGULATOR
Model: APR 63-5

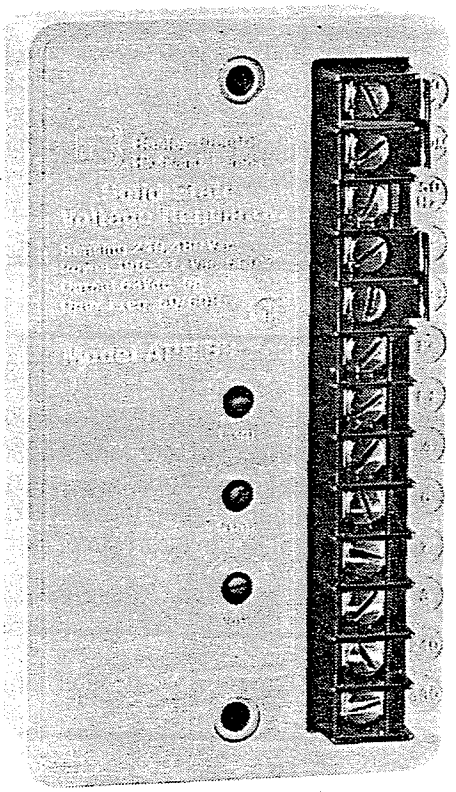

Basler Electric
Highland, Illinois

Publication Number: 9 1687 00 990
July, 1984
Revision H: May, 1996

Warning

To prevent personal injury or equipment damage, only qualified technicians/operators should install, operate, or service this device.

Caution

Meggers and high potential test equipment should be used with extreme care. Incorrect use of such equipment could damage components contained in the device.

CONFIDENTIAL INFORMATION

of Basler Electric Company, Highland, IL. It is loaned for confidential use. Subject to return on request and with the mutual understanding that it will not be used in any manner detrimental to the interests of Basler Electric Company.

It is not the intention of this manual to cover all details and variations in equipment, nor does it provide data for every possible contingency regarding installation or operation. The availability and design of all features and options are subject to change without notice. Should further information be required, call Basler Electric Company, Highland, IL.

Rev	ECA
H	15632

SECTION 1

GENERAL INFORMATION

1-1. GENERAL

a. The Basler APR 63-5 Voltage Regulator is a CSA NRTL/C approved unit contained in an encapsulated plastic case. The regulator controls the dc exciter field power of conventional, 50 or 60 Hz brushless generators that have a 63 Vdc field to regulate the output voltage.

b. Regulation is provided by sensing the generator output voltage, converting it to a dc signal and comparing the signal to a reference voltage signal. An error signal is developed and used to control the dc field power in order to maintain a constant generator output.

1-2 SPECIFICATIONS

Refer to Table 1-1 for the electrical specifications and to Table 1-2 for the physical specifications of the APR 63-5.

Table 1-1. Electrical Specifications.

Output Power (with a 240 Vac Input):	5 Adc @ 63 Vdc (315 W) maximum continuous. 8.5 Adc @ 105 Vdc (893 W) forcing for one minute.
Exciter Field Dc Resistance:	12.6 W minimum to 100 W maximum.
Ac Input Power:	190 to 277 Vac, ±10%, single-phase, 50/60 Hz.
Input Burden:	650 VA maximum.
Ac Sensing Voltage: **240 Vac:** **480 Vac:**	190-240 Vac (240 Volt tap); 380-480 Vac (480 Volt tap); single-phase, 50/60 Hz; ±10%.
Sensing Burden:	5 VA.
Voltage Adjust Range:	170 to 264 Vac or 340 to 528 Vac using the internal voltage adjust. The external voltage adjust provides a ±10% adjustment of the nominal value determined by the internal voltage adjust.
External Voltage Adjust Rheostat:	A 1000 W, 2 W, locking-shaft potentiometer with a screwdriver slotted shaft is supplied optionally with the regulator for remote mounting.
Regulation Accuracy:	±0.25%.
Voltage Drift:	<±1% voltage variation for a 50°C (90°F) change.
Response Time:	≤1.0 cycle.
Frequency Compensation:	Refer to Figure 1-1.
EMI Suppression:	Internal electromagnetic filter (EMI filter).

Katolight Service - Master Repair Manual - Page 1061

Table 1-1. Electrical Specifications - Continued.

Voltage Build-up:	Internal provisions for automatic voltage build-up from generator residual voltages as low as 6 Vac.
Overexcitation Shut-down:	Refer to paragraph 1-3.
Power Dissipation:	25 W maximum.

Table 1-2. Physical Specifications.

Operating Temperature:	-40°C (-40°F) to +60°C (+140°F).
Storage Temperature:	-65°C (-85°F) to +85°C (+185°F).
Shock:	Withstands up to 15 G's in each of three mutually perpendicular axes.
Vibration:	Withstands the following accelerations at the stated frequency: 1.2 G's at 5 to 26 Hz, 0.036" double amplitude at 27 to 53 Hz, 5.0 G's at 53 to 1000 Hz.
Weight:	2.5 lbs. (1.1 kg) net.

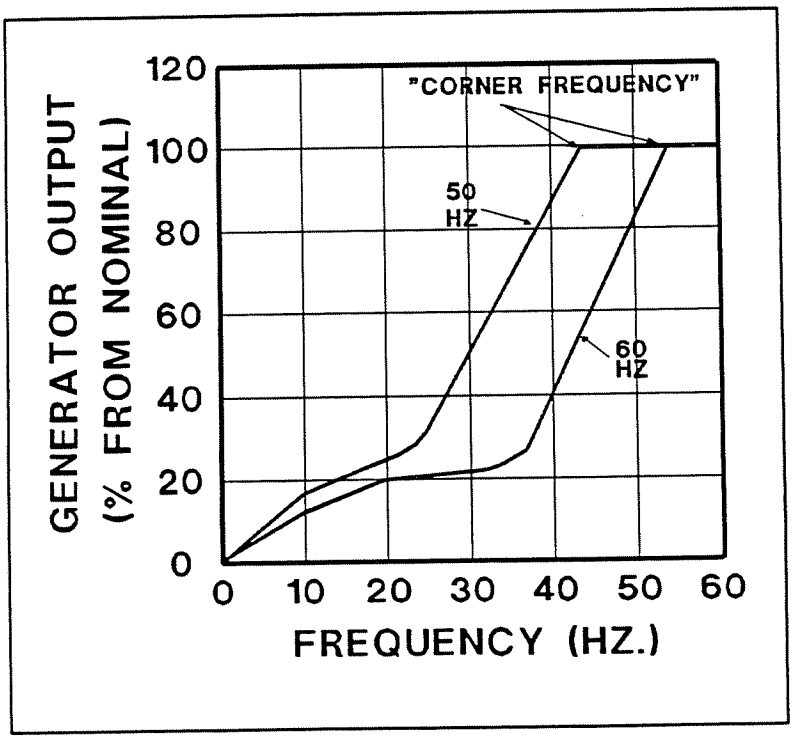

Figure 1-1. Typical APR 63-5 Frequency Compensation Curves.

Katolight Service - Master Repair Manual - Page 1062

1-3. OVEREXCITATION SHUTDOWN

a. Refer to Figure 1-2. If the exciter field voltage exceeds 100 ±5 Vdc, the regulator automatically removes the field current after a time delay. The time delay is inversely proportional to the magnitude of the detected overvoltage condition. At approximately 135 ±5 Vdc, the field voltage is removed instantaneously.

b. Upon detection of overexcitation and the resulting field voltage shutdown, the regulator will not reset or return to an operational condition until the generator output drops to less than 6 Vac for ten (10) seconds minimum.

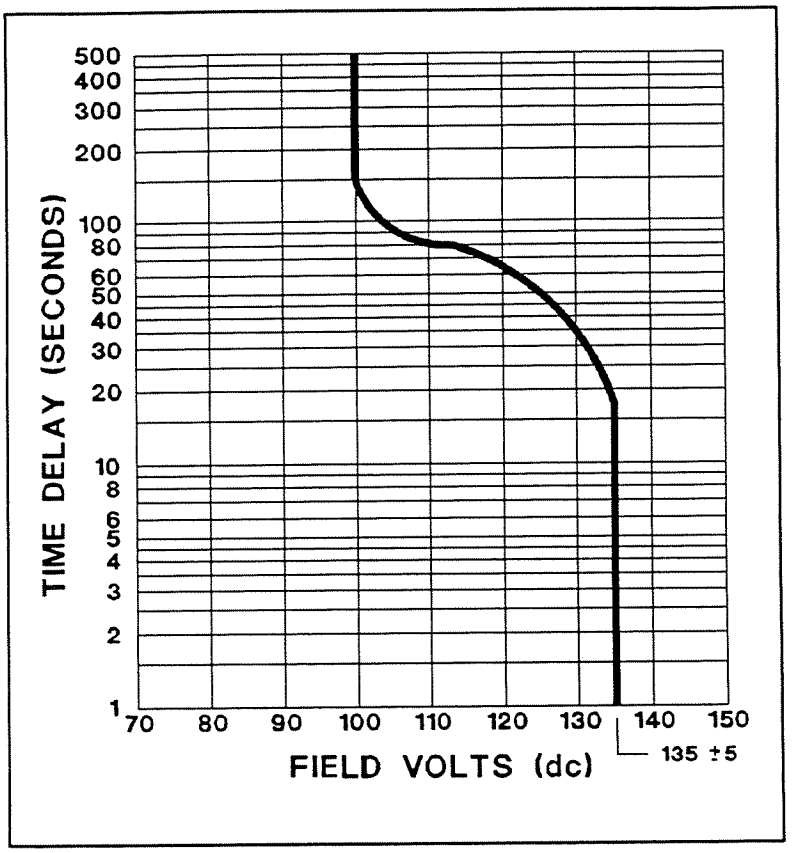

Figure 1-2. Typical Inverse Time Delay Characteristic Curves.

1-4. ACCESSORY ITEMS

a. Power Isolation Transformer. A low voltage power isolation can be used to provide electrical isolation and to match voltages from the generator to the regulator. To obtain maximum regulator output power (exciter field resistance of 12.6 to 25 W), use power isolation transformer BE 18674. For field resistances of 25 W or more, the smaller transformer (BE 18675) may be used.

b. Paralleling Module (APM 2000). To parallel two or more generators using droop or cross-current compensation, use this module and a current transformer with a 5 A nominal secondary such as the Basler CT series.

Katolight Service - Master Repair Manual - Page 1063

c. ***Manual Voltage Control (MVC 300).*** This control offers back-up excitation for the regulator in critical applications. The regulated output of this electronic manual control improves the performance of a generator using traditional types of manual control.

d. ***Current Boost System (CBS 305).*** Using the electronics built into the APR 63-5, and a current transformer to tap the generator's line current, the CBS 305 boosts the field current during short circuit or large motor starting.

Katolight Service - Master Repair Manual - Page 1064

SECTION 2

INSTALLATION

2-1. MOUNTING

The regulator may be mounted in any position. Refer to the outline drawing (Figures 2-1 and 2-2). The regulator may be mounted directly on the generator set using 1/4" hardware. Select the proper hardware to withstand any expected shipping/transportation and operating conditions.

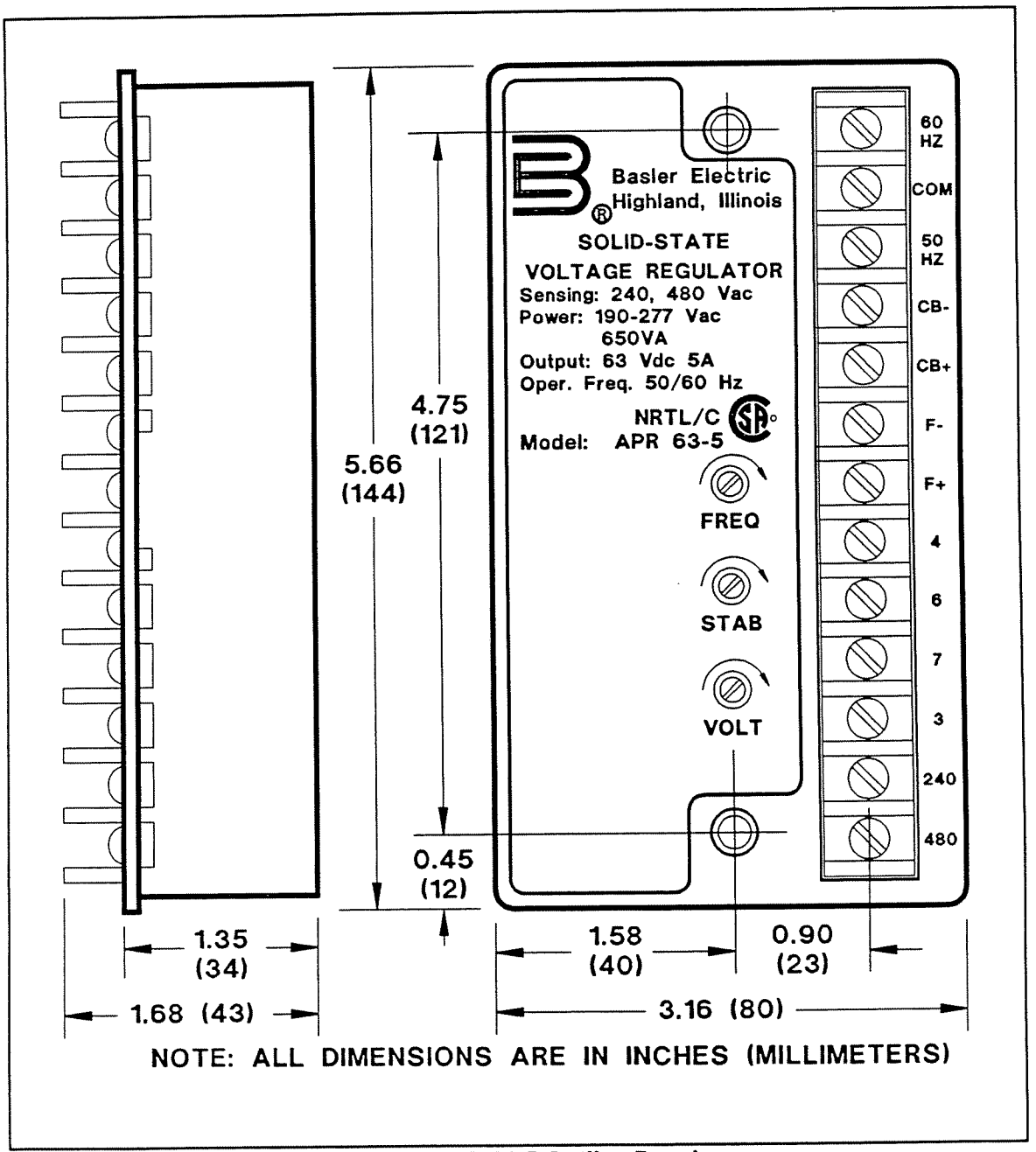

Figure 2-1. APR 63-5 Outline Drawing.

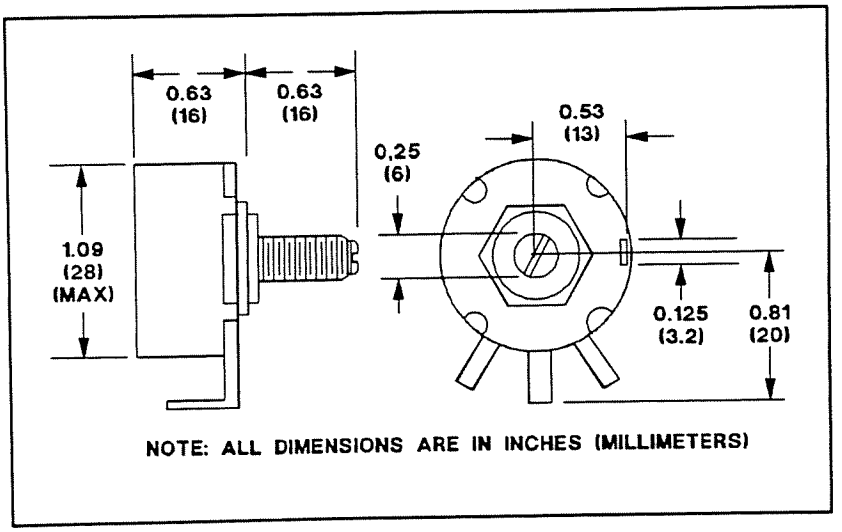

Figure 2-2. (Optional) External Voltage Adjust Potentiometer, Basler P/N 17727.

2-2 INTERCONNECTION (Refer to Figures 2-3 through 2-5.)

a. Connect the jumper from **COM** to either the **50 Hz** or **60 Hz** terminal depending upon the generator frequency.

b. Remove the jumper and connect terminals **CB-** and **CB+** to the CBS 305 inputs (if used). If the CBS 305 is not being used, leave the jumper in place.

c. If an external voltage adjust control is being used, connect the potentiometer to terminals **6** and **7** as shown. If not, connect a jumper between terminals **6** and **7**.

d. Connect the exciter field to terminals **F+** and **F-**. Be sure to observe polarity.

e. Connect the input power to the generator stator to provide power to terminals **3** and **4**. Fuse both leads. Install the optional shutdown switch, if desired.

f. Connect the sensing input to either **240** or **480** depending on voltage. The sensing should be connected "line-to-line".

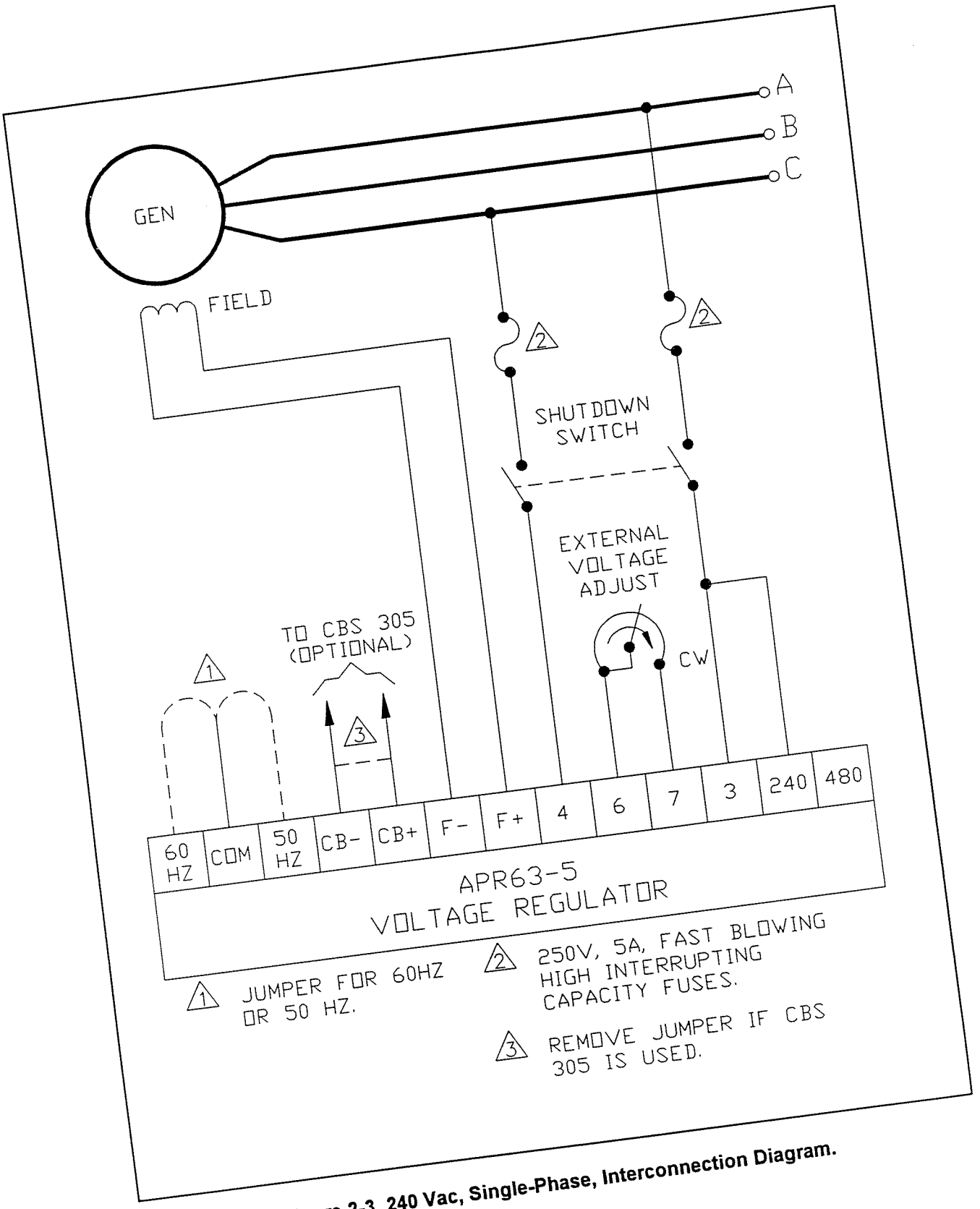

Figure 2-3. 240 Vac, Single-Phase, Interconnection Diagram.

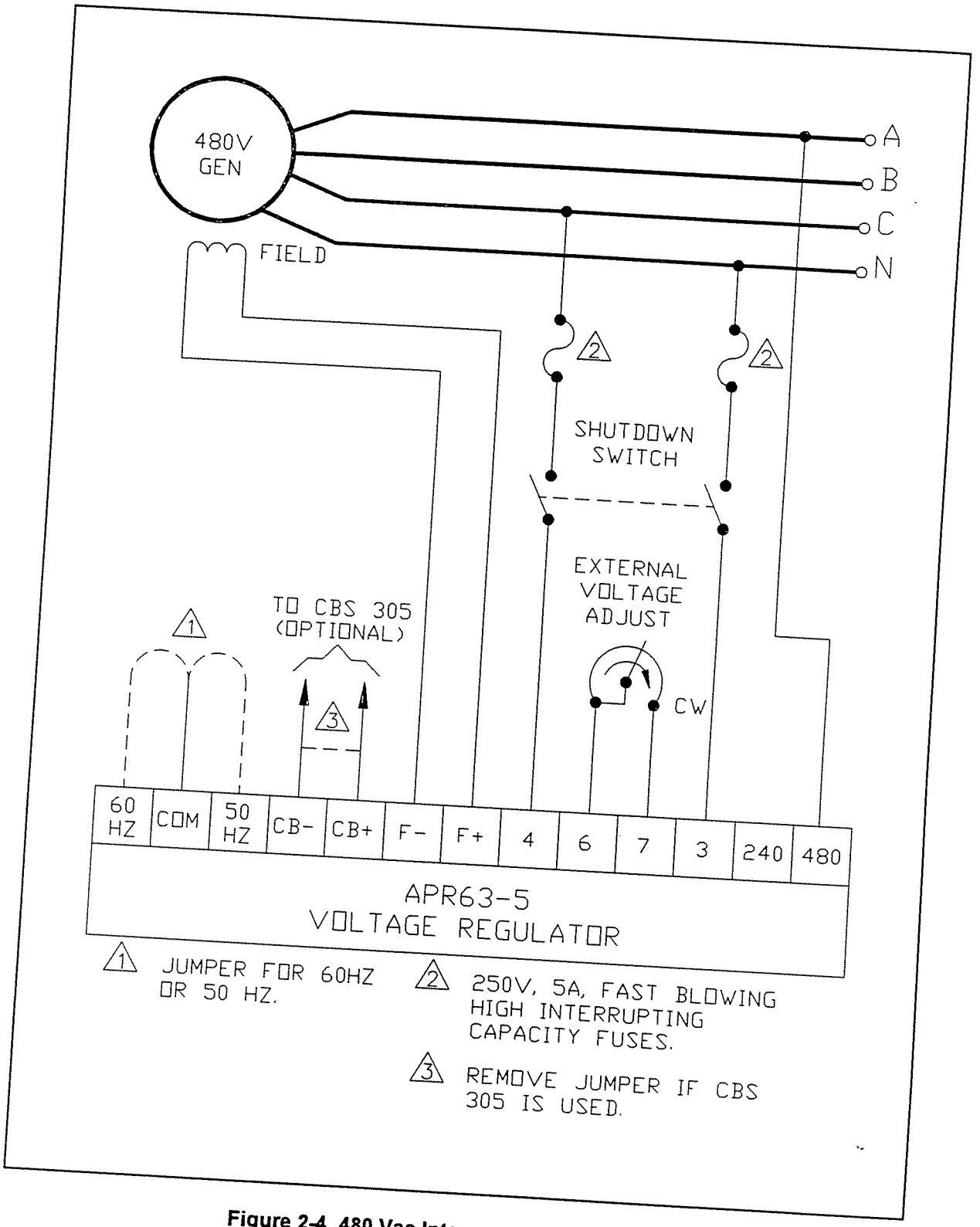

Figure 2-4. 480 Vac Interconnection Diagram.

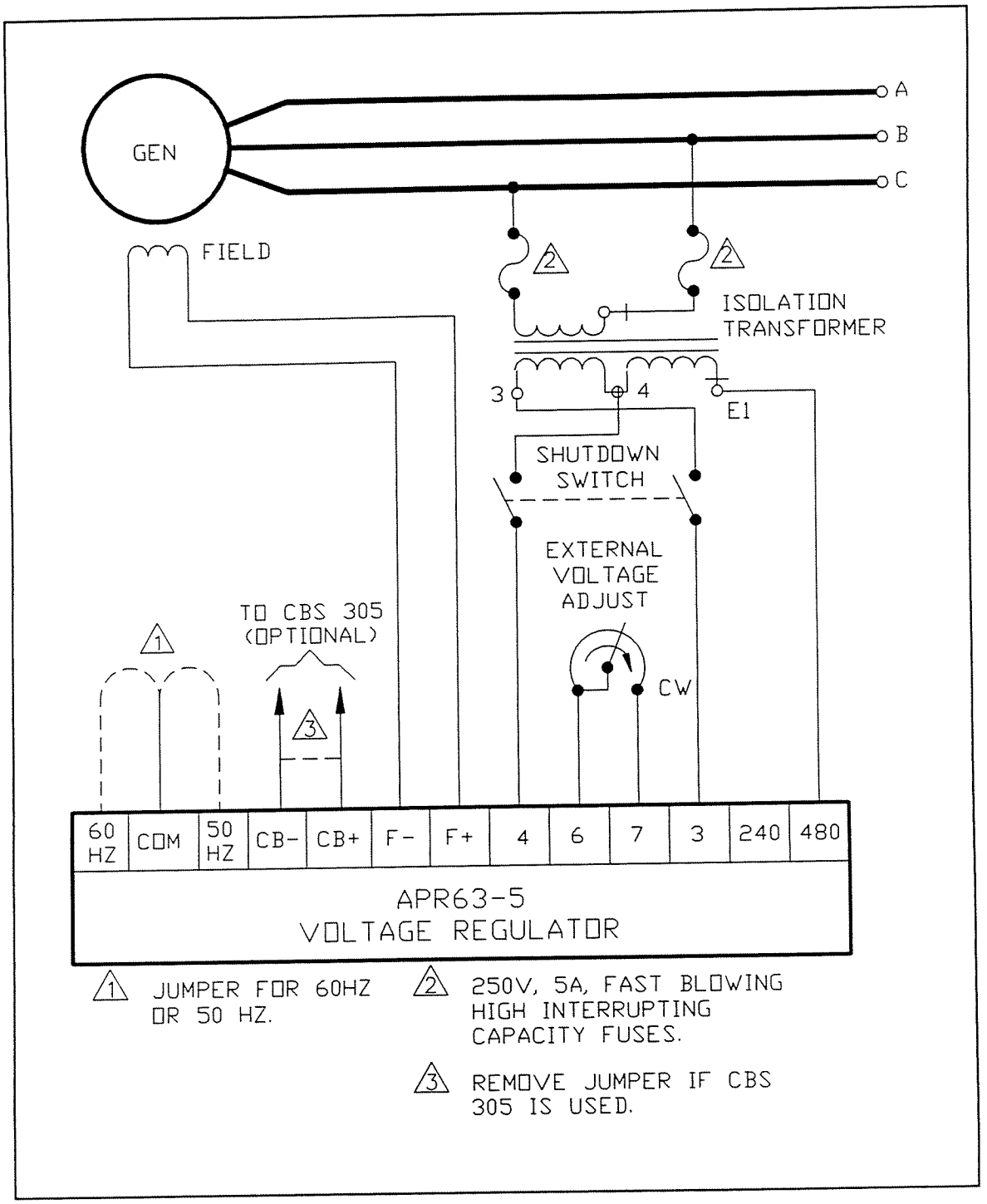

Figure 2-5. Isolation Transformer Interconnection Diagram.

SECTION 3

OPERATION

3-1. GENERAL

The below procedures provide instructions for setting up, starting, operating, and adjusting the APR 63-5 Voltage Regulator. Symptoms of problems occurring during start-up that result from incorrect regulator adjustment and certain generator system problems that resemble faulty regulation, are included together with possible solutions.

3-2. PRELIMINARY SET-UP

To prevent damage to the regulator, complete the following steps before proceeding with system start-up:

a. Verify that the voltage regulator specifications conform with the generator system requirements.

b. Ensure that the regulator has been installed and connected in accordance with Section 2.

3-3. OPERATION AT REDUCED SPEEDS

During periods of prime mover idling, use the shutdown switch to remove power from the regulator.

3-4. SYSTEM START-UP

Refer to Table 3-1 for starting up the system.

Table 3-1. System Start-up.

Procedure	Symptom	Remedy
1. Perform the preliminary set-up per paragraph 3-2.	N/A	N/A
2. Start prime mover and bring up to rated speed.	a. Voltage does not build-up.	a. Flash field. b. Troubleshoot.
	b. Voltage builds up and then decays.	Troubleshoot.
3. Slowly adjust **VOLT** adjustment or external voltage adjust rheostat until voltage reaches nominal.	a. Voltage does not build up to rated value.	a. Check generator output for shorted or excessive load. b. Troubleshoot.
	b. Voltage high and uncontrollable.	Troubleshoot.

Table 3-1. System Start-up.

Procedure	Symptom	Remedy
4. Apply and remove load to check stability.	Generator response too slow or is hunting (oscillating).	a. Check generator output for shorted or excessive load. b. Troubleshoot.
5. Check regulation under normal operating conditions.	Poor regulation.	a. Check that prime mover is up to speed. b. Check that voltmeter is connected at the same point as the regulator sensing. c. Use an average sensing voltmeter (not an RMS sensing). d. Troubleshoot.
6. Reduce generator frequency to approximately 5 Hz below nominal. Generator output should decrease from this point.	Generator output voltage does not decrease at desired frequency.	a. Check that all wiring is in accordance with section 2. b. Adjust FREQ control.

3-5. OVEREXCITATION SHUTDOWN

a. The overexcitation shutdown is included to remove the regulator output power if the exciter field voltage exceeds 100 ±5 Vdc. Refer to paragraph 1-3 for details.

b. After regulator output power is shutdown, the regulator can be reset by decreasing the input voltage to less than 6 Vac for a minimum of 10 seconds. This may be accomplished by stopping the prime mover or by interrupting the regulator input with the shutdown switch.

3-6. ADJUSTMENTS

a. Field Flashing. When the regulator is operated with the generator for the first time, the polarity of the residual magnetism may not be correct or of sufficient magnitude. If the residual voltage at terminals **3** and **4** is greater than 6 Vac, replace the regulator. If generator residual voltage is less than 6 Vac at terminals **3** and **4**, shut down the prime mover and proceed with the following steps:

CAUTION

Do not flash the field with the generator in motion. The regulator may be damaged.

(1) With the prime mover at rest, apply a dc source (ungrounded), of not more than 48 Vdc, to terminals **F+** (positive) and **F-** (negative) in series with a limiting resistor. Use one (1) ohm of resistance for each volt from the dc power source with a power rating of least one (1) watt per ohm.
EXAMPLE: If using a 24 Vdc source, use a 24 ohm, 24 watt resistor.

(2) Allow the field to be flashed for approximately ten seconds before removing the dc source.

(3) If voltage build-up does not occur after performing steps (1) and (2), verify the polarity of the dc source used in steps (1) and (2) and re-perform.

b. Frequency Roll-Off Adjustment. The APR 63-5 underfrequency adjust is factor preset to cause an average 2 V drop in the generator's line input voltage to the regulator when the frequency is between 54.5 and 55.5 Hz (for 60 Hz applications). For 50 Hz applications, the frequency "roll-off" is factory preset to between 44 and 46 Hz. To reset the frequency roll-off, proceed as follows:

(1) Adjust the prime mover RPM to the desired frequency compensation (corner frequency roll-off) point.

(2) Adjust the front panel **FREQ** control until the output voltage starts to drop off.

(3) Bring the prime mover up to rated speed. The output voltage should return to normal.

c. Stability Adjustment. An oscilloscope or other voltage recording device should be used if a stability setting is desired that will provide the fastest possible voltage response with good generator stability.

(1) Rotation of the front panel **STAB** control in the clockwise (CW) direction will slow response time.

(2) Rotation of the front panel **STAB** control in the counter-clockwise (CCW) direction will speed response time. If rotated too far CCW, the generator voltage may oscillate (hunt).

(3) Rotate the front panel **STAB** control CCW until the system starts oscillating and then rotate CW just past the point where oscillation occurred.

d. Voltage Adjustment.

(1) Installation of a jumper across terminals **6** and **7** allows the internal (front panel) **VOLT** adjustment to vary the generator nominal voltage over the range shown in Table 1-1.

(2) The 1000 ohm external potentiometer (supplied with the regulator) may be connected in place of the jumper and will allow for a ±10% adjustment of the voltage range. The nominal value of this range is set by the front panel **VOLT** control.

(3) If a range less than or greater than that provided by the 1000 ohm potentiometer is desired, a 2 Watt potentiometer of any value from 50 ohms to 5000 ohms may be substituted.

3-7. OPERATIONAL TEST

To operationally test any APR 63-5, refer to Figure 3-1 and perform the following steps in the order given:

a. Connect the voltage regulator as shown by Figure 3-1 and apply 240 Vac as shown.

b. Adjust the front panel **VOLT** control fully counter-clockwise (CCW).

RESULT: Observe that the lamp does not light.

c. Adjust the front panel **VOLT** control fully clockwise (CW).

RESULT: Observe that the lamp is now lit.

d. Adjust the front panel **VOLT** control until the lamp just goes out.

Regulator operation is satisfactory if the above results are obtained. Stability, however, must be tested with the generator and regulator operating.

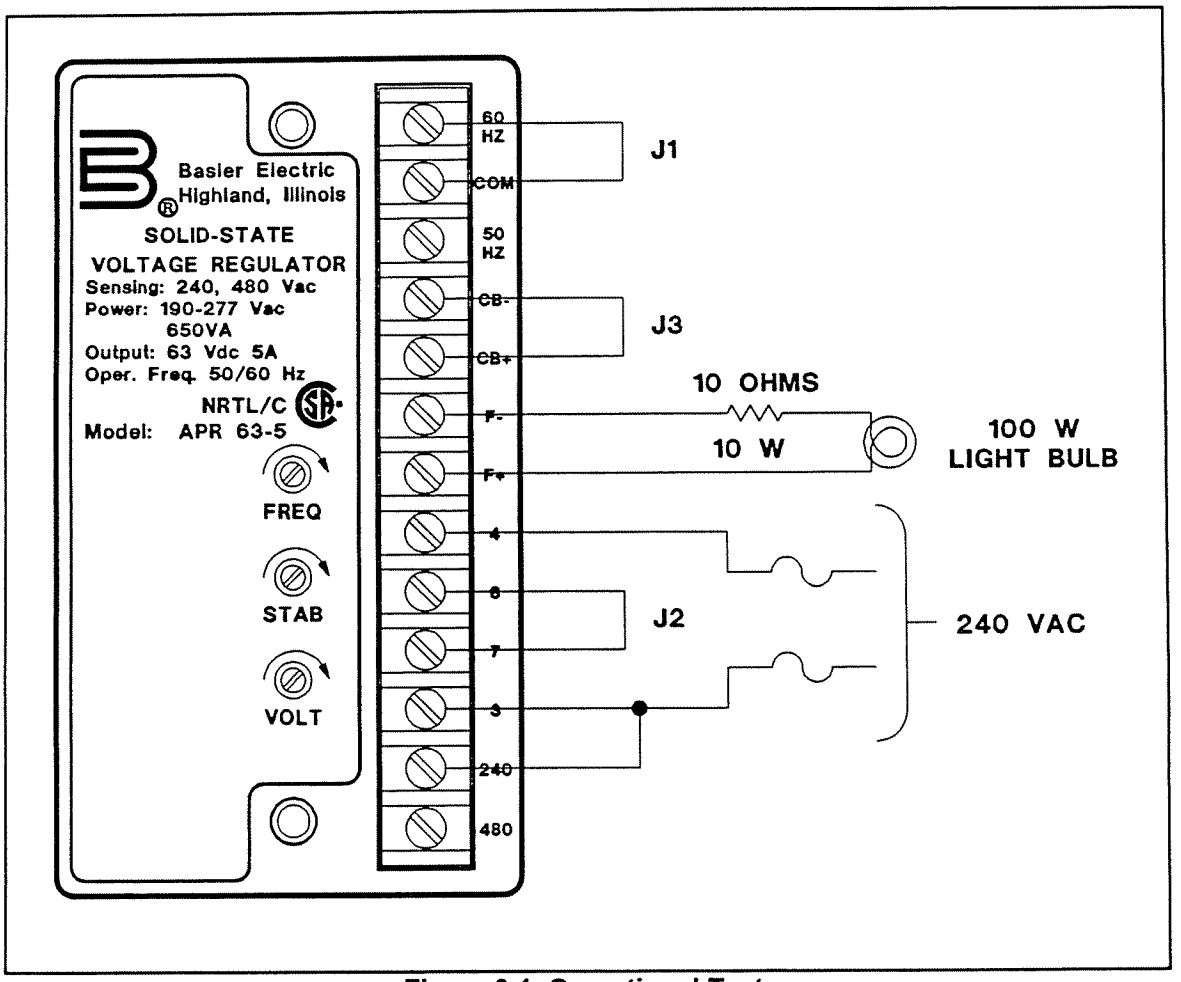

Figure 3-1. Operational Test.

SECTION 4

MAINTENANCE

4-1. PREVENTIVE MAINTENANCE

A periodic inspection should be made of the voltage regulator to ensure that it is clean and free from accumulations of dust and moisture. Be sure that all terminal connections are clean and tight.

4-2. TROUBLESHOOTING

In case of failure/defective operation of the unit, the following table (Table 4-1) is provided to aid in the determination of the cause and the possible solution.

Table 4-1. Troubleshooting.

Symptom	Possible Cause	Remedy
Voltage does not build up.	a. No voltage or incorrect voltage to power input at terminals **3** and **4**.	a. Flash field. b. Verify wiring. c. Check fuses. d. Check shutdown switch. e. Replace regulator.
	b. Overexcitation circuit is shutting off regulator.	Shutdown prime mover then restart. Watch for high voltage.
Voltage builds up and then decays.	a. Open external voltage adjust rheostat or no connection between terminals **6** and **7**.	Replace external voltage adjust rheostat or the jumper across terminals **6** and **7**.
	b. Defective regulator.	Replace regulator.
Voltage does not build up to rated value.	a. Terminals **CB+** and **CB-** are not jumpered.	Install jumper across terminals **CB+** and **CB-**.
	b. Wrong sensing tap selected.	Check sensing tap.
	c. Internal or external voltage adjustments are improperly set.	Adjust front panel **VOLT** control and/or external voltage adjust rheostat.
	d. Faulty regulator.	Replace regulator.

Table 4-1. Troubleshooting.

Symptom	Possible Cause	Remedy
Voltage high and uncontrollable.	a. No sensing input.	Verify wiring.
	b. Wrong sensing tap.	Check sensing tap.
	c. Faulty regulator.	Replace regulator.
Generator response too slow or hunting.	a. Improper front panel **STAB** adjustment.	Re-adjust front panel **STAB** adjustment.
	b. Faulty regulator.	Replace regulator.
Poor regulation.	a. Field resistance not matched to regulator capability or regulator output rating too low for generator requirements.	Verify specifications.
	b. Incorrect jumper selection for 50 Hz or 60 Hz operation.	Check for improper frequency jumper installation.
	c. Low prime mover speed.	Verify prime mover speed.

INSTRUCTION MANUAL

FOR

VOLTAGE REGULATOR
Model: APR 125-5
Part Number: 9 1688 00 100



Basler Electric

Publication Number: **9 1688 00 990**
Revision H: **07/2001**

CONTENTS

SECTION 1 • GENERAL INFORMATION 1-1

DESCRIPTION 1-1
SPECIFICATIONS 1-1

SECTION 2 • FUNCTIONAL DESCRIPTION 2-1

OVEREXCITATION SHUTDOWN 2-1
ACCESSORY ITEMS 2-1
Power Isolation Transformer 2-1
Paralleling Module (APM 2000) 2-1
Manual Voltage Control (MVC 300) 2-1
Current Boost System (CBS 320) 2-2

SECTION 3 • INSTALLATION 3-1

MOUNTING 3-1
INTERCONNECTION 3-2

SECTION 4 • OPERATION 4-1

GENERAL 4-1
PRELIMINARY SET-UP 4-1
OPERATION AT REDUCED SPEEDS 4-1
SYSTEM START-UP 4-1
OVEREXCITATION SHUTDOWN 4-2
ADJUSTMENTS 4-2
Field Flashing 4-2
Frequency Roll-Off Adjustment 4-2
Stability Adjustment 4-3
Voltage Adjustment 4-3
OPERATIONAL TEST 4-3

SECTION 5 • MAINTENANCE 5-1

PREVENTIVE MAINTENANCE 5-1
TROUBLESHOOTING 5-1

SECTION 6 • MANUAL CHANGE INFORMATION 6-1

CHANGES 6-1

Warning

To prevent personal injury or equipment damage, only qualified technicians/operators should install, operate, or service this device.

Caution

Meggers and high potential test equipment should be used with extreme care. Incorrect use of such equipment could damage components contained in the device.

INTRODUCTION

This manual provides information concerning the operation and installation of APR 125-5, Voltage Regulator. To accomplish this, the following is provided.

- Specifications
- Functional Description
- Installation and Calibration Information
- Maintenance

WARNING

TO AVOID PERSONAL INJURY OR EQUIPMENT DAMAGE, ONLY QUALIFIED PERSONNEL SHOULD PERFORM THE PROCEDURES PRESENTED IN THIS MANUAL.

First Printing: May 1985

Printed in USA

© 1993 – 2001, Basler Electric Co., Highland, IL 62249

July 2001

CONFIDENTIAL INFORMATION

OF BASLER ELECTRIC COMPANY, HIGHLAND, IL. IT IS LOANED FOR CONFIDENTIAL USE, SUBJECT TO RETURN ON REQUEST, AND WITH THE MUTUAL UNDERSTANDING THAT IT WILL NOT BE USED IN ANY MANNER DETRIMENTAL TO THE INTEREST OF BASLER ELECTRIC COMPANY.

It is not the intention of this manual to cover all details and variations in equipment, nor does this manual provide data for every possible contingency regarding installation or operation. The availability and design of all features and options are subject to modification without notice. Should further information be required, contact Basler Electric Company, Highland, Illinois.

BASLER ELECTRIC
ROUTE 143, BOX 269
HIGHLAND, IL 62249 USA
http://www.basler.com, info@basler.com
PHONE 618-654-2341 FAX 618-654-2351

SECTION 1 • GENERAL INFORMATION

DESCRIPTION

The Basler APR 125-5 Voltage Regulator is an encapsulated unit contained in a metal case. The regulator controls the dc exciter field power of medium-sized, 50 or 60 Hz brushless generators that have a 125 Vdc field to regulate the output voltage.

Regulation is provided by sensing the generator output voltage, converting it to a dc signal and comparing the signal to a reference voltage signal. An error signal is developed and used to control the dc field power in order to maintain a constant generator output.

SPECIFICATIONS

See Table 1-1 for the electrical specifications and to Table 1-2 for the physical specifications of the APR 125-5.

Table 1-1. Electrical Specifications

Output Power (with a 240 Vac Input):	5 ADC @ 125 VDC (625 W) MAXIMUM CONTINUOUS. 8 Adc @ 200 Vdc (1600 W) forcing for one minute.
Exciter Field Dc Resistance:	25 • minimum to 100 • maximum.
Ac Input Power:	190 to 277 Vac, ±10%, single-phase, 50/60 Hz.
Input Burden:	1000 VA maximum.
Ac Sensing Voltage: **240 Vac:** **480 Vac:**	190/220 Vac at 50 Hz nominal; 208/240 Vac at 60 Hz nominal. 380/400/415 Vac at 50 Hz nominal; 416/450/480 Vac at 60 Hz nominal.
Sensing Burden:	1 VA.
Voltage Adjust Range:	170 to 264 Vac or 340 to 528 Vac using the internal voltage adjust. The external voltage adjust provides a ±10% adjustment of the nominal value determined by the internal voltage adjust.
External Voltage Adjust Rheostat:	A 5000 •, 2 W, locking-shaft potentiometer with a screwdriver slotted shaft is supplied with the regulator for remote mounting.
Regulation Accuracy:	±0.25%.
Voltage Drift:	<±1% voltage variation for a 50•C (90•F) change.
Response Time:	<1.0 cycle.
Frequency Compensation:	See Figure 1-1.
EMI Suppression:	Internal electromagnetic filter (EMI filter).
Voltage Build-up:	Internal provisions for automatic voltage build-up from generator residual voltages as low as 6 Vac.
Overexcitation Shutdown:	See Section 2
Power Dissipation:	25 W maximum.

Table 1-2. Physical Specifications

UL Recognized/ CSA Certified	UL Recognized per Standard 508, UL File No. E 97035. CSA Certified per Standard CAN/CSA-C22.2 No. 14-M91, CSA File No. LR 23131.
Operating Temperature	-40°C (-40°F) to +70°C (+158°F).
Storage Temperature	-65°C (-85°F) to +85°C (+185°F).
Vibration	Withstands: 1.2 G's at 5 to 26 Hz 0.036 inch double amplitude at 27 to 53Hz 5.0 G's at 53 to 1000 Hz.
Shock	Withstands up to 15 G's in each of three mutually perpendicular axes.
Weight	5.1 lbs. (2.3 kg) net, 6.1 lbs. (2.85 kg) shipping.

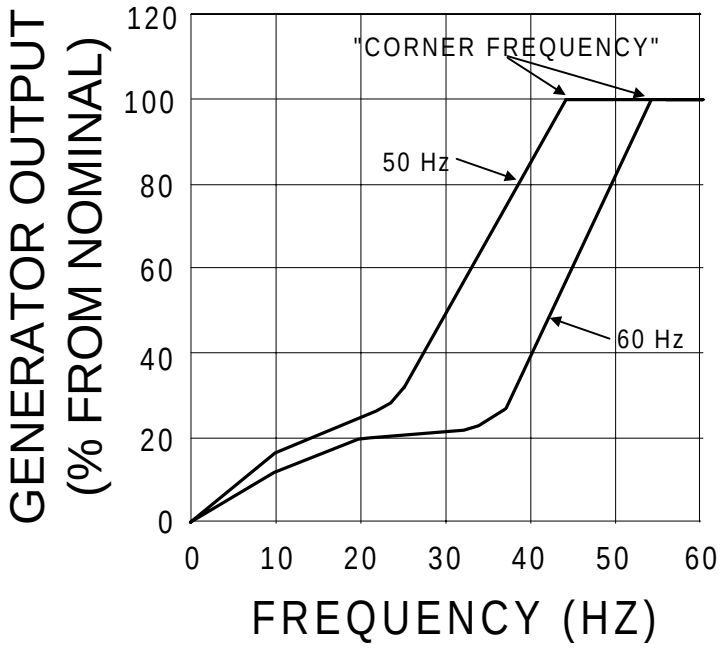

Figure 1-1. Typical APR 125-5 Frequency Compensation Curves

SECTION 2 • FUNCTIONAL DESCRIPTION

OVEREXCITATION SHUTDOWN

See Figure 2-1. If the exciter field voltage exceeds 190 Vdc, the regulator automatically removes the field current after a time delay. The time delay is inversely proportional to the magnitude of the detected overvoltage condition. At approximately 280 Vdc, the field voltage is removed instantaneously. Overexcitation shutdown will not operate below 160 Vdc.

Upon detection of overexcitation and the resulting field voltage shutdown, the regulator will not reset or return to an operational condition until the generator output drops to less than 6 Vac for ten (10) seconds minimum.

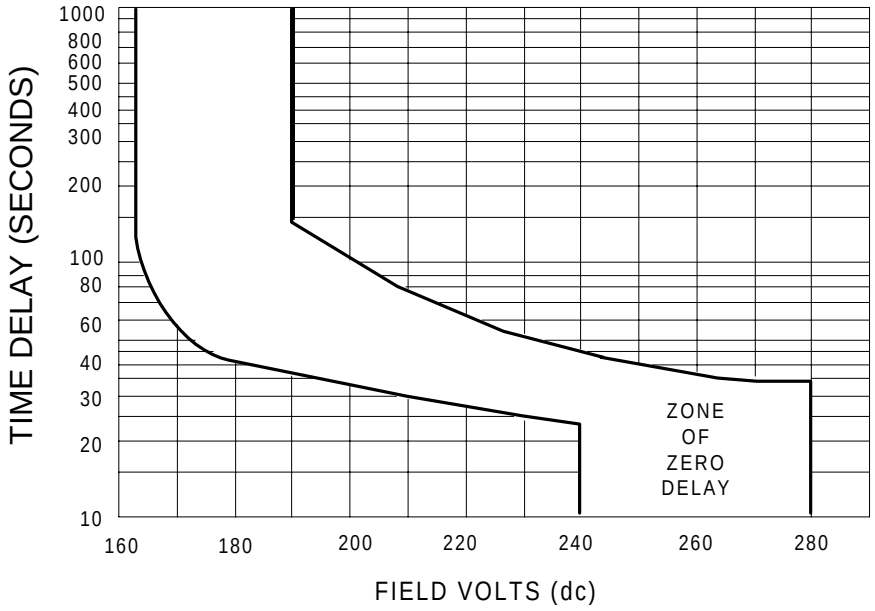

Figure 2-1. Typical Inverse Time Delay Characteristic Curves

ACCESSORY ITEMS

Power Isolation Transformer

A low voltage power isolation can be used to provide electrical isolation and to match voltages from the generator to the regulator. To obtain maximum regulator output power (exciter field resistance of 25 to 30Ω), select a power isolation transformer of 1.0 kVA or greater. For field resistances of 30Ω or more, the transformer may be derated (500 VA at 50Ω, 250 VA at 100Ω.

Paralleling Module (APM 2000)

To parallel two or more generators using droop or cross-current compensation, use this module and a current transformer with a 5 A nominal secondary such as the Basler CT series.

Manual Voltage Control (MVC 300)

This control offers back-up excitation for the regulator in critical applications. The regulated output of this electronic manual control improves the performance of a generator using traditional types of manual control.

Current Boost System (CBS 320)

Using the electronics built into the APR 125-5, and a current transformer to tap the generator's line current, the CBS 320 boosts the field current during short circuit or large motor starting.

SECTION 3 • INSTALLATION

MOUNTING

The regulator may be mounted in any position. Refer to the outline drawing (Figures 3-1 and 3-2). The regulator may be mounted directly on the generator set using 1/4" hardware. Select the proper hardware to withstand any expected shipping/transportation and operating conditions.

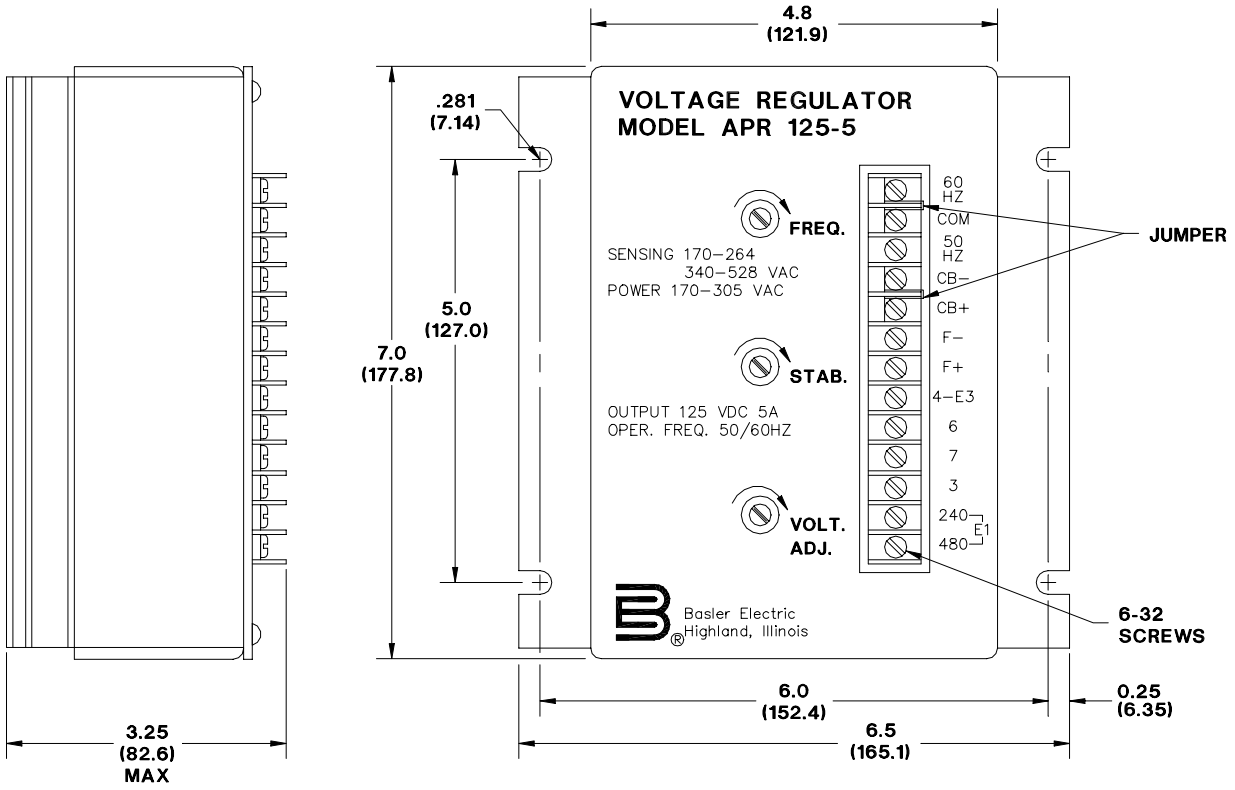

NOTE: ALL DIMENSIONS ARE IN INCHES (MILLIMETERS).

Figure 3-1. APR 125-5 Outline Drawing

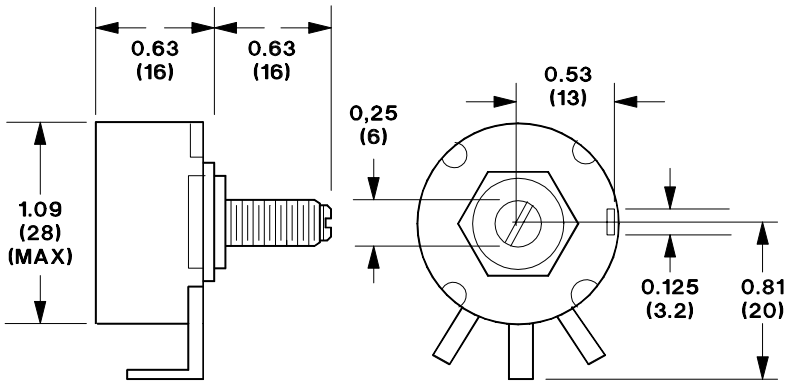

NOTE: ALL DIMENSIONS ARE IN INCHES (MILLIMETERS)

Figure 3-2. External Voltage Adjust Potentiometer, Basler P/N 06390

INTERCONNECTION

See Figures 3-3 through 3-5 for interconnections.

a. Connect the jumper from **COM** to either the **50 Hz** or **60 Hz** terminal depending upon the generator frequency.

b. Remove the jumper and connect terminals **CB-** and **CB+** to the CBS 320 inputs (if used). If the CBS 320 is not being used, leave the jumper in place.

c. If an external voltage adjust control is being used, connect the potentiometer to terminals **6** and **7** as shown. If not, connect a jumper between terminals **6** and **7**.

d. Connect the exciter field to terminals **F+** and **F-**. Be sure to observe polarity.

e. Connect the input power to the generator stator to provide power to terminals **3** and **4-E3** within the voltage range of 190 to 277 Vac nominal. Fuse both leads. Install the optional shutdown switch, if desired.

f. Connect the sensing input to either **240 (E1)** or **480 (E1)** and to terminal **4-E3** depending on voltage. The sensing should be connected "line-to-line".

.

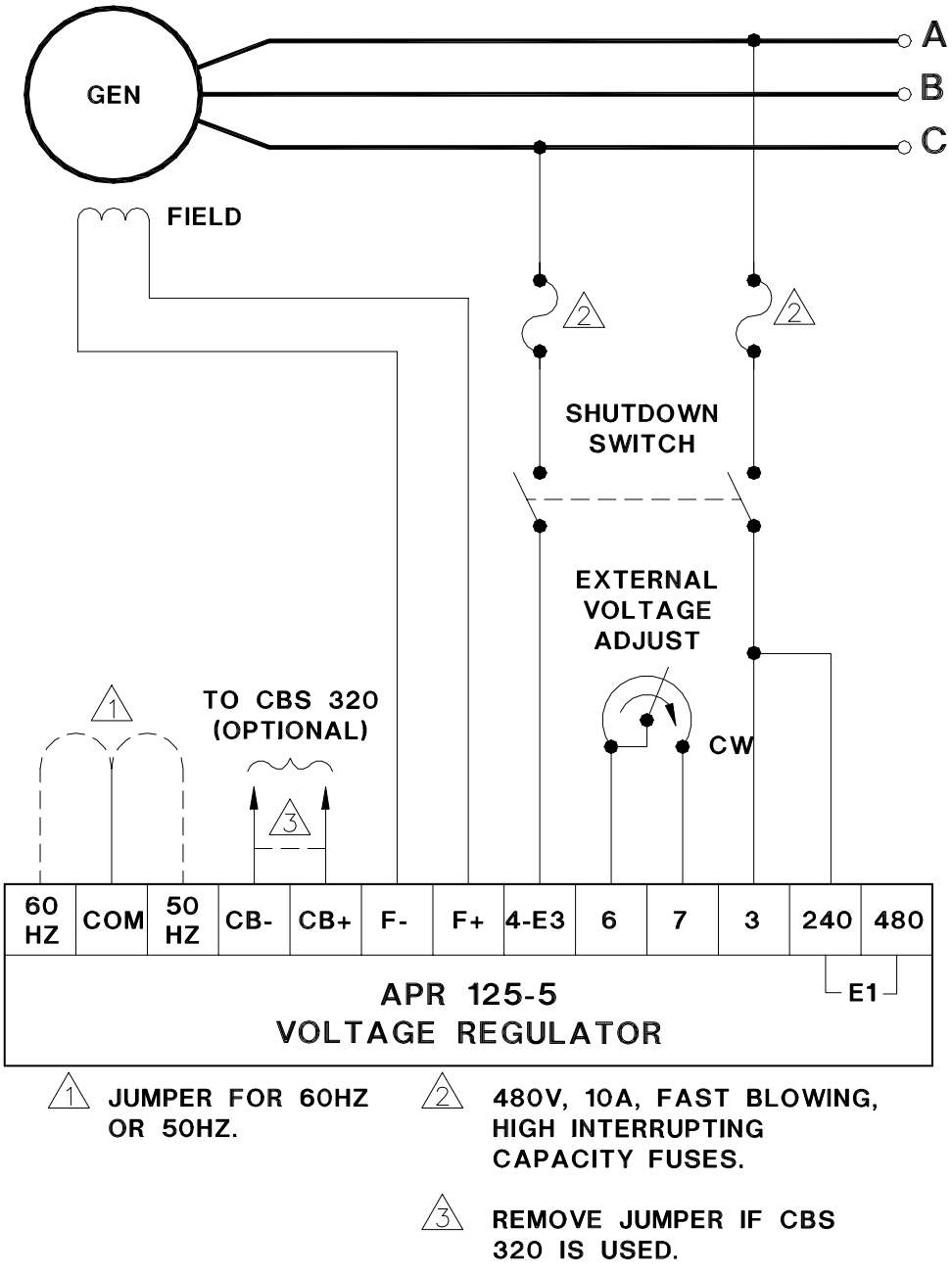

Figure 3-3. 208/240 Vac Interconnection Diagram

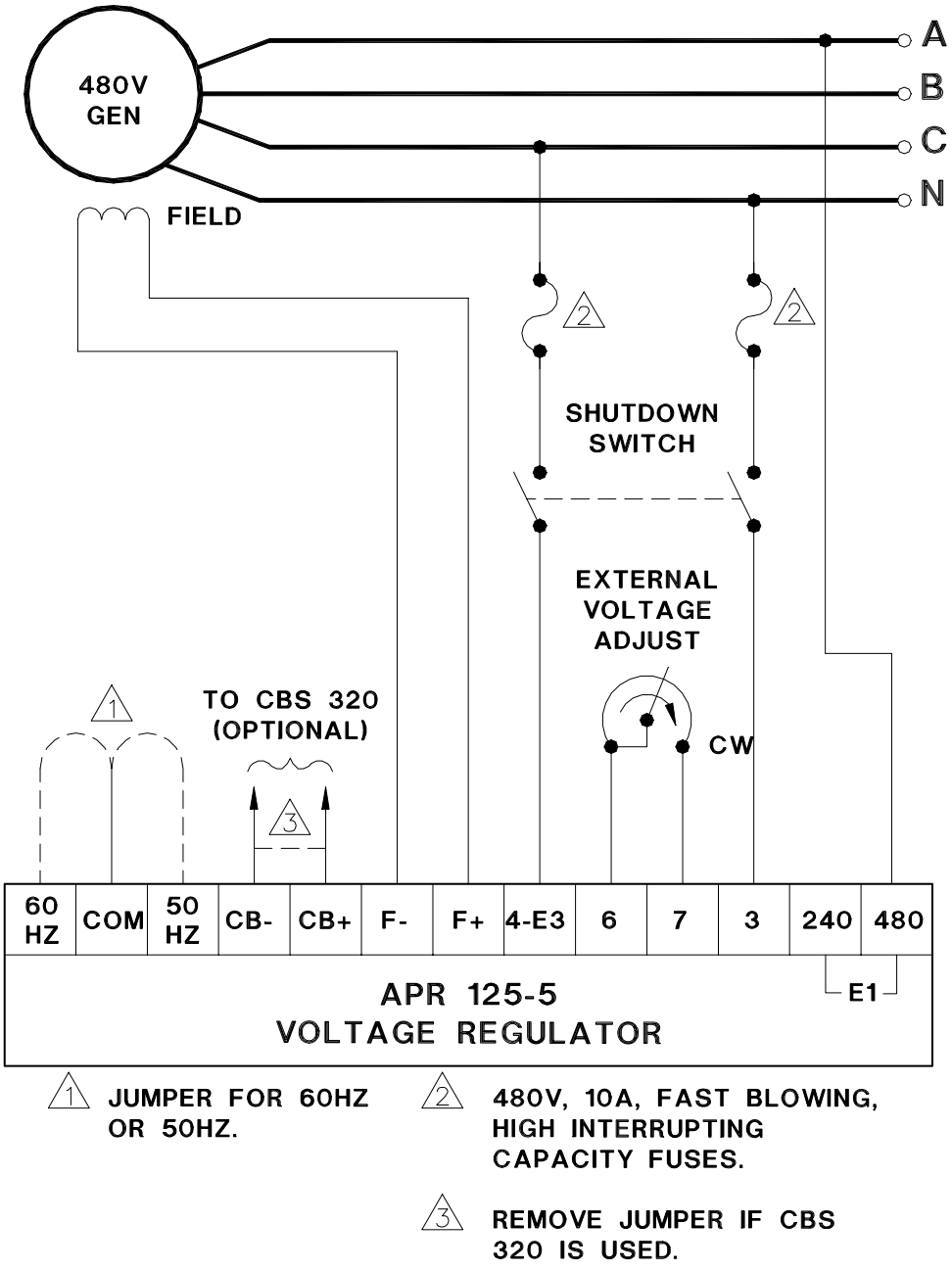

Figure 3-4. 410/450/480 Vac Interconnection Diagram

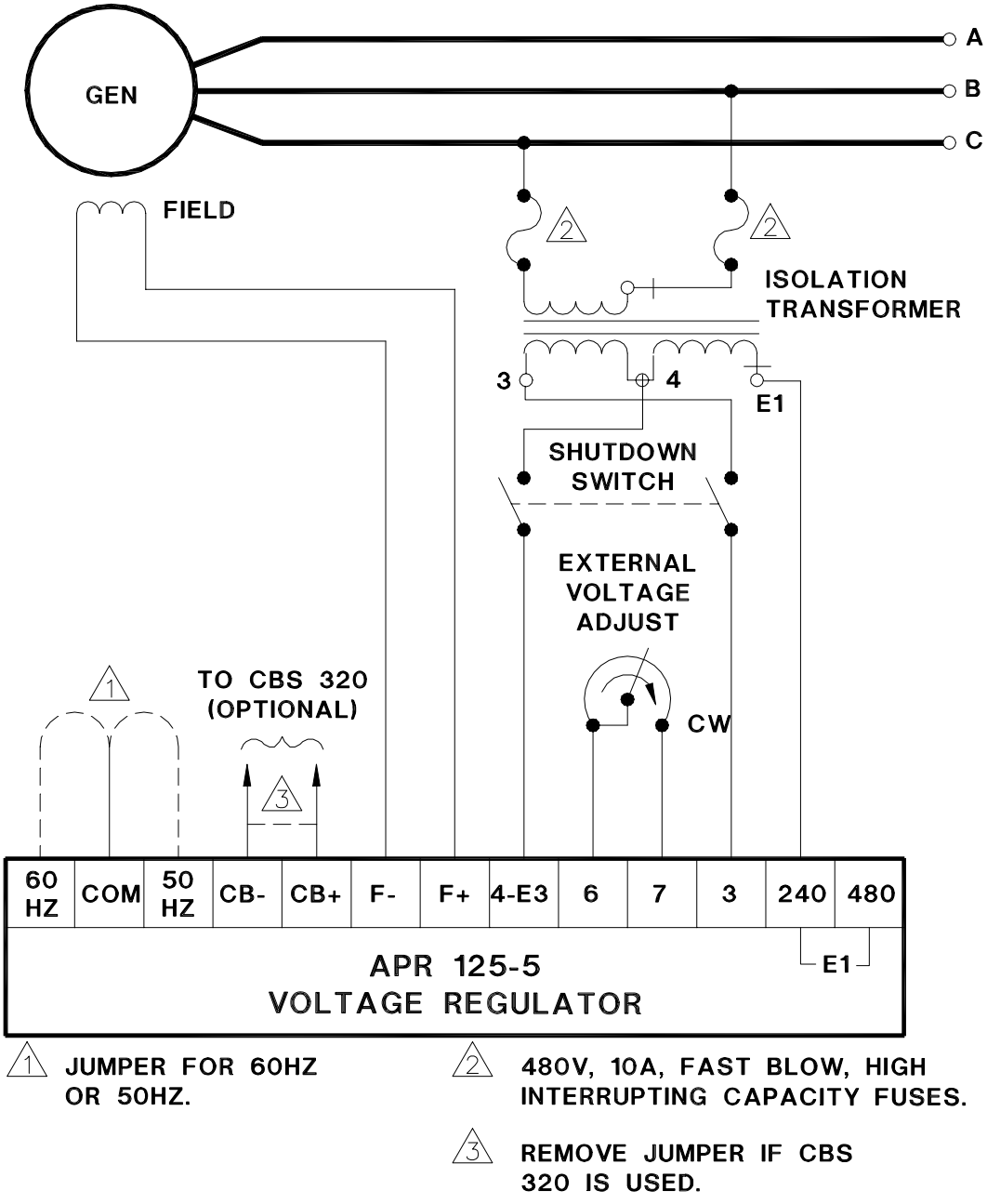

Figure 3-5. Isolation Transformer Interconnection Diagram

SECTION 4 • OPERATION

GENERAL

The below procedures provide instructions for setting up, starting, operating, and adjusting the APR 125-5 Voltage Regulator. Symptoms of problems occurring during start-up that result from incorrect regulator adjustment and certain generator system problems that resemble faulty regulation, are included together with possible solutions.

PRELIMINARY SET-UP

To prevent damage to the regulator, complete the following steps before proceeding with system start-up:

a. Verify that the voltage regulator specifications conform with the generator system requirements.

b. Ensure that the regulator has been installed and connected in accordance with Section 3.

OPERATION AT REDUCED SPEEDS

During periods of prime mover idling, use the shutdown switch to remove power from the regulator.

SYSTEM START-UP

See Table 4-1 for system start-up.

Table 4-1. System Start-Up

Procedure	Symptom	Remedy
1. Perform the preliminary set-up.	N/A	N/A
2. Start prime mover and bring up to rated speed.	a. Voltage does not build-up	a. Flash field b. Troubleshoot
	b. Voltage builds up and then decays	Troubleshoot
3. Slowly adjust **VOLT** adjustment or external voltage adjust rheostat until voltage reaches nominal.	a. Voltage does not build up to rated value	a. Check generator output for shorted or excessive load b. Troubleshoot
	b. Voltage high and uncontrollable	Troubleshoot
4. Apply and remove load to check stability.	Generator response too slow or is hunting (oscillating).	a. Check generator output for shorted or excessive load. b. Troubleshoot.
5. Check regulation under normal operating conditions.	Poor regulation.	a. Check that prime mover is up to speed. b. Check that voltmeter is connected at the same point as the regulator sensing. c. Use an average sensing voltmeter (not an RMS sensing). d. Troubleshoot.

Procedure	Symptom	Remedy
6. Reduce generator frequency to approximately 5 Hz below nominal. Generator output should decrease from this point.	Generator output voltage does not decrease at desired frequency.	a. Check that all wiring is in accordance with Section 3. b. Adjust FREQ control.

OVEREXCITATION SHUTDOWN

The overexcitation shutdown is included to remove the regulator output power if the exciter field voltage exceeds 190 Vdc.

After regulator output power is shutdown, the regulator can be reset by decreasing the input voltage to less than 6 Vac for a minimum of 10 seconds. This may be accomplished by stopping the prime mover or by interrupting the regulator input with the shutdown switch.

ADJUSTMENTS

Field Flashing

When the regulator is operated with the generator for the first time, the polarity of the residual magnetism may not be correct or of sufficient magnitude. If the residual voltage at terminals **3** and **4-E3** is greater than 6 Vac, replace the regulator. If generator residual voltage is less than 6 Vac at terminals **3** and **4-E3**, shut down the prime mover and proceed with the following steps:

Caution

Do not flash the field with the generator in motion. The regulator may be damaged.

1. With the prime mover at rest, apply a dc source (ungrounded), of not more than 48 Vdc, to terminals **F+** (positive) and **F-** (negative) in series with a limiting resistor. Use one (1) ohm of resistance for each volt from the dc power source with a power rating of least one (1) watt per ohm.

   EXAMPLE: If using a 24 Vdc source, use a 24 ohm, 24 watt resistor.

2. Allow the field to be flashed for approximately ten seconds before removing the dc source.
3. If voltage build-up does not occur after performing steps (1) and (2), verify the polarity of the dc source used in steps (1) and (2) and re-perform.

Frequency Roll-Off Adjustment

The APR 125-5 underfrequency adjust is factor preset to cause an average 2 V drop in the generator's line input voltage to the regulator when the frequency is between 55 and 55.6 Hz (for 60 Hz applications). For 50 Hz applications, the frequency "roll-off" is factory preset to between 45.75 and 47.75 Hz. To reset the frequency roll-off, proceed as follows:

1. Adjust the prime mover RPM to the desired frequency compensation (corner frequency roll-off) point.
2. Adjust the front panel **FREQ** control until the output voltage starts to drop off.
3. Bring the prime mover up to rated speed. The output voltage should return to normal.

Stability Adjustment

An oscilloscope or other voltage recording device should be used if a stability setting is desired that will provide the fastest possible voltage response with good generator stability.

1. Rotation of the front panel **STAB** control in the clockwise (CW) direction will slow response time.
2. Rotation of the front panel **STAB** control in the counter-clockwise (CCW) direction will speed response time. If rotated too far CCW, the generator voltage may oscillate (hunt).
3. Rotate the front panel **STAB** control CCW until the system starts oscillating and then rotate CW just past the point where oscillation occurred.

Voltage Adjustment

1. Installation of a jumper across terminals **6** and **7** allows the internal (front panel) **VOLT** adjustment to vary the generator nominal voltage over the range shown in Table 1-1.
2. The 5000 ohm external potentiometer (supplied with the regulator) may be connected in place of the jumper and will allow for a ±10% adjustment of the voltage range. The nominal value of this range is set by the front panel **VOLT** control.
3. If a range less than or greater than that provided by the 5000 ohm potentiometer is desired, a 2 Watt potentiometer of any value from 1000 ohms to 10000 ohms may be substituted.

OPERATIONAL TEST

To operationally test any APR 125-5, refer to Figure 4-1 and perform the following steps in the order given:

a. Connect the voltage regulator as shown by Figure 4-1 and apply 240 Vac as shown.

b. Adjust the front panel **VOLT** control fully counter-clockwise (CCW).

   RESULT: Observe that the lamp does not light.

c. Adjust the front panel **VOLT** control fully clockwise (CW).

   RESULT: Observe that the lamp is now lit.

d. Adjust the front panel **VOLT** control until the lamp just goes out.

Regulator operation is satisfactory if the above results are obtained. Stability, however, must be tested with the generator and regulator operating.

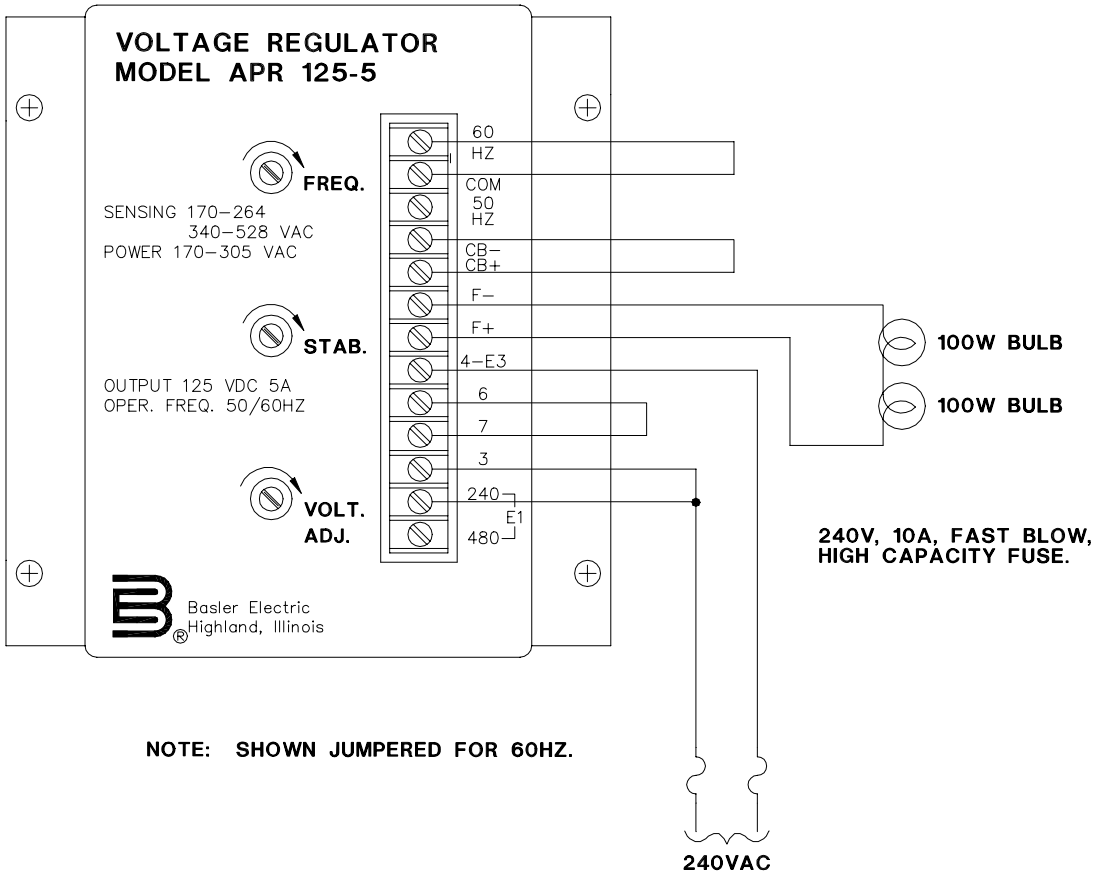

Figure 4-1. Operational Test Set-Up

SECTION 5 • MAINTENANCE

PREVENTIVE MAINTENANCE

A periodic inspection should be made of the voltage regulator to ensure that it is clean and free from accumulations of dust and moisture. Be sure that all terminal connections are clean and tight.

TROUBLESHOOTING

In case of failure/defective operation of the unit, the following table (Table 5-1) is provided to aid in the determination of the cause and the possible solution.

Table 5-1. Troubleshooting

Symptom	Possible Cause	Remedy
Voltage does not build up	a. No voltage or incorrect voltage to power input at terminals **3** and **4—E3**	a. Flash field b. Verify wiring c. Check fuses d. Check shutdown switch e. Replace regulator
	b. Overexcitation circuit is shutting off regulator	Shutdown prime mover then restart (Watch for high voltage)
Voltage builds up and then decays	a. Open external voltage adjust rheostat or no connection between terminals **6** and **7**	Replace external voltage adjust rheostat or the jumper across terminals **6** and **7**
	b. Defective regulator	Replace regulator
Voltage does not build up to rated value	a. Terminals **CB+** and **CB-** are not jumpered	Install jumper across terminals **CB+** and **CB-**
	b. Wrong sensing tap selected	Check sensing tap
	c. Internal or external voltage adjustments are improperly set	Adjust front panel **VOLT** control and/or external voltage adjust rheostat
	d. Faulty regulator	Replace regulator
Voltage high and uncontrollable	a. No sensing input	Verify wiring
	b. Wrong sensing tap	Check sensing tap
	c. Faulty regulator	Replace regulator
Generator response too slow or is hunting (oscillating)this point.	a. Improper front panel **STAB** adjustment	Re-adjust front panel **STAB** adjustment
	b. Faulty regulator	Replace regulator

Symptom	Possible Cause	Remedy
Poor regulation	a. Field resistance not matched to regulator capability or regulator output rating too low for generator requirements	Verify specifications
	b. Incorrect jumper selection for 50 Hz or 60 Hz operation	Check for improper frequency jumper installation
	c. Low prime mover speed	Verify prime mover speed

SECTION 6 • MANUAL CHANGE INFORMATION

CHANGES

Substantive changes in this manual to date are summarized in Table 6-1.

Table 6-1. Summary of Changes

Revision	Summary of Changes	ECA/ECO.	Date
H	Revised the manual to current manual style and added UL recognition and CSA Certification. Corrected new Figure number 3-5 to show 240 V connection from transformer.	14085	07/10/01

Basler Electric
ROUTE 143, BOX 269
HIGHLAND, IL 62249 USA
http://www.basler.com, info@basler.com
PHONE 618-654-2341 FAX 618-654-2351

MAGNAMAX^{DVR}

DIGITAL VOLTAGE REGULATOR

TECHNICAL MANUAL

MODEL DVR®2000 AND DVR®2000C

MARATHON® ELECTRIC

A Subsidiary of Regal-Beloit Corporation

FIGURE 1 - FRONT AND REAR VIEW OF VOLTAGE REGULATOR 4

SECTION 1- INTRODUCTION 5

GENERAL DESCRIPTION 5

SPECIFICATIONS 5
Sensing Voltage 6
Parallel Operation 6
Under Frequency Operation 6
Over-Excitation 7
Over-Voltage Protection 7
Over-Temperature Protection 7
Loss of Sensing 7
Field Current Limit 7
Environmental Protection 7
EMI Suppression 7

SECTION 2 - OPERATION INSTRUCTIONS 8

MAIN REGULATOR 8
Front Panel 8
Power-up Self Test 8
Parallel Operation 9

PROTECTIVE FEATURES 9
Over-Excitation 9
Over-Voltage 9
Over-Temperature 9
Loss-Of-Sensing 10
Under Frequency Operation 10
Field Current Limit 10

SECTION 3 - INSTALLATION 11

MOUNTING 11

INTERCONNECTIONS 12

REMOTE VOLTAGE ADJUST 12

SENSING VOLTAGE 12

POWER OUTPUT 12

PARALLELING INPUT 12

FIELD FLASHING 13

SECTION 4 - ADJUSTMENTS AND START-UP PROCEDURE 14

GENERAL 14

INITIAL ADJUSTMENTS 15

FINE VOLTAGE ADJUSTMENT **16**

COARSE VOLTAGE ADJUSTMENT **16**

REMOTE VOLTAGE ADJUSTMENT **16**

STABILITY RANGE ADJUSTMENT **17**

UNDER FREQUENCY ADJUSTMENT **18**

DROOP ADJUSTMENT **19**

REACTIVE DIFFERENTIAL (CROSS CURRENT) ADJUSTMENT **21**

VAR/PF ADJUSTMENT **21**

SECTION 5 - TROUBLE SHOOTING 23

Symptom **23**
- **No voltage buildup** 23
- **Output Voltage Low** 24
- **Output Voltage High** 24
- **Generator does not respond as adjustments are made.** 24
- **Poor Voltage Regulation** 24
- **Remote Voltage Control Operates Backwards.** 24
- **Remote Voltage Control functions in one direction only.** 24
- **Generator Voltage Hunting** 24
- **Under Frequency LED on.** 25
- **Over-excitation LED on.** 25
- **Field Limit LED on.** 25
- **(Over-excitation LED on).** 25
- **All LED's off but regulator working.** 26
- **Long time for LED scan to be accomplished,** 26
- **Voltage does not build up after engine is idled.** 26
- **Regulator fails immediately after replacement** 26

SECTION 7 - DRAWINGS 27

DIMENSIONS OF THE DVR2000 & DVR2000C **27**

TYPICAL CONNECTION - THREE PHASE SENSING (95-600 VOLTS) **28**

TYPICAL CONNECTION - SINGLE PHASE SENSING (95-600 VOLTS) **29**

TYPICAL CONNECTION - THREE PHASE SENSING (601-6600 VOLTS) **30**

TYPICAL CONNECTION - SINGLE PHASE SENSING (601-6600 VOLTS) **31**

TYPICAL CONNECTION WITH REACTIVE DIFFERENTIAL PARALLELING **32**
- **THREE PHASE SENSING (95-600 VOLTS)** 32

TYPICAL CONNECTION WITH VAR / PF CONTROL **33**
- **THREE PHASE SENSING (95-600 VOLTS)** 33

TYPICAL CONNECTION WITH VAR / PF CONTROL **34**
- **SINGLE PHASE SENSING AND ISOLATION TRANSFORMER** 34

FIGURE 1 - FRONT AND REAR VIEW OF VOLTAGE REGULATOR

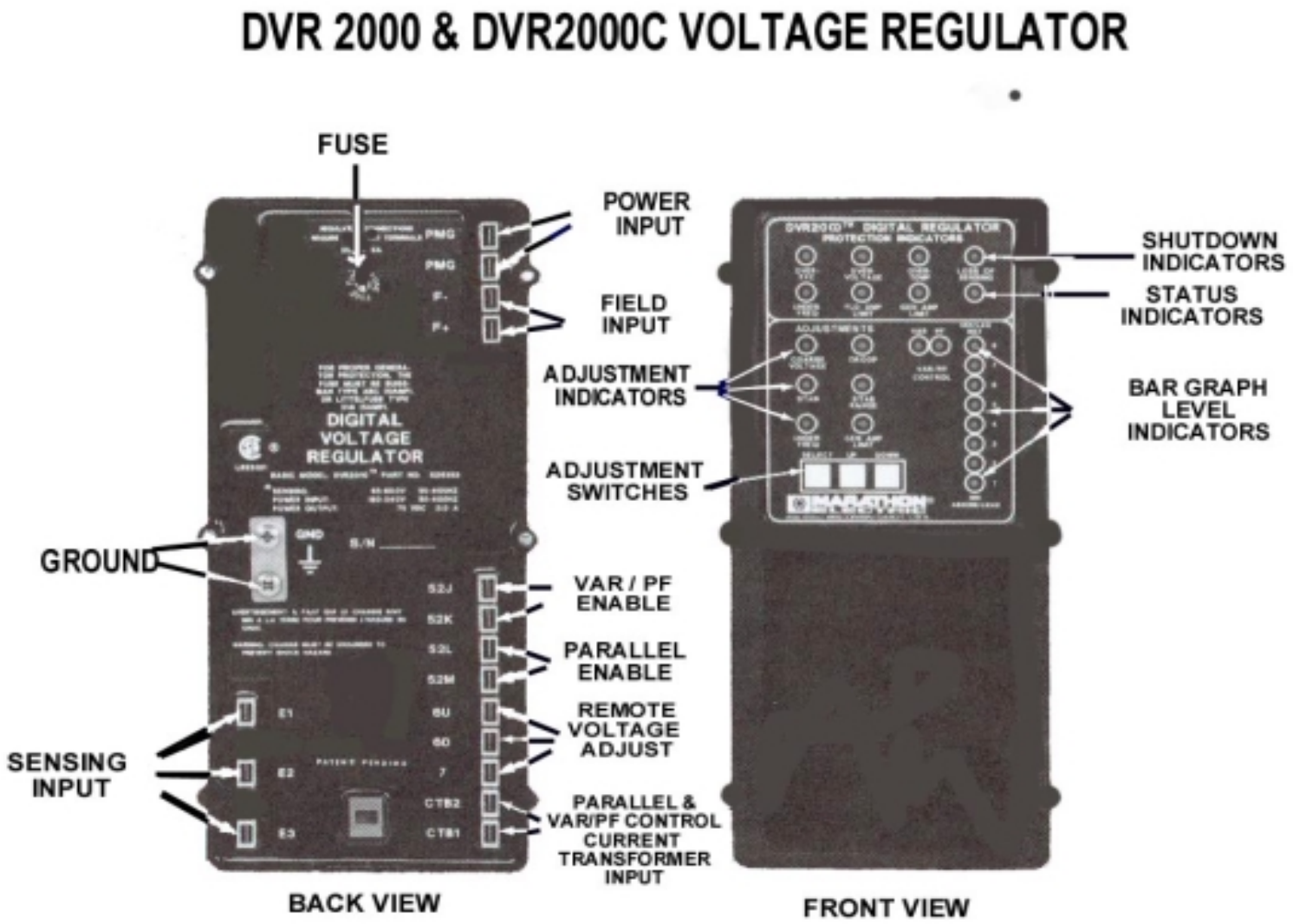

SECTION 1- INTRODUCTION

GENERAL DESCRIPTION

The DVR2000 Automatic Voltage Regulator is a sealed electronic solid state microprocessor based digital voltage regulator, which control the output of a brush less ac generator by regulating the current into the exciter field. Unlike most regulators, the input power is from a multi-pole high frequency permanent magnet generator (PMG) incorporated within the main generator.

There is one basic model, the DVR2000 and one other model available, which is a DVR2000C.The "C" suffix indicates "VAR" or "PF" control is available.

SPECIFICATIONS

	DVR2000 & DVR2000C
Sensing	95-600v, 25-420Hz
Sensing Mode	RMS (1 or 3 Phase)
Input Requirements	180-240v, 250-300Hz
Continuous Output	75 Vdc at 3.0 Adc
Max Output 1-mm	150 Vdc at 7.5 Adc
Hot Field Resistance	18-25 Ohms
Regulation	0.25%
Response	Less than 7 msec
Operating Temp.	-40°C to +70°C
Storage Temperature	-40°C to +85°C
Size	10.4 L x 5.0 W x 2.8 D (26.4 x 12.7 x 7.l cm)
Weight	5.5 Lbs. (2.5 Kg)
Fuse Size and Type	25x 1.25 5-amp Littelfuse 314005 or Bussman ABC-5
Accessory Input	Not Available

FEATURES

-See Figure 1 for location of features on face of regulator

Sensing Voltage

The DVR2000 Digital Regulator is equipped for either 3-phase or 1-phase sensing. The sensing voltage is adjustable over the entire range of 95-600v without the need for resetting transformer taps.

Single phase sensing is achieved by connecting terminal E2 and E3 to the same generator terminal.

Parallel Operation

Provisions are included in the regulator to allow the paralleling of two or more generators using either reactive droop or reactive differential (cross current) compensation with the addition of an external 5 amp 5va current transformer.

Under Frequency Operation

The under frequency function allows the generator to operate with a constant volts per hertz characteristic (a linear relationship of voltage with respect to frequency). The transition frequency is adjustable from 40 Hz to 70 Hz.
See Figure 2 for typical characteristics.

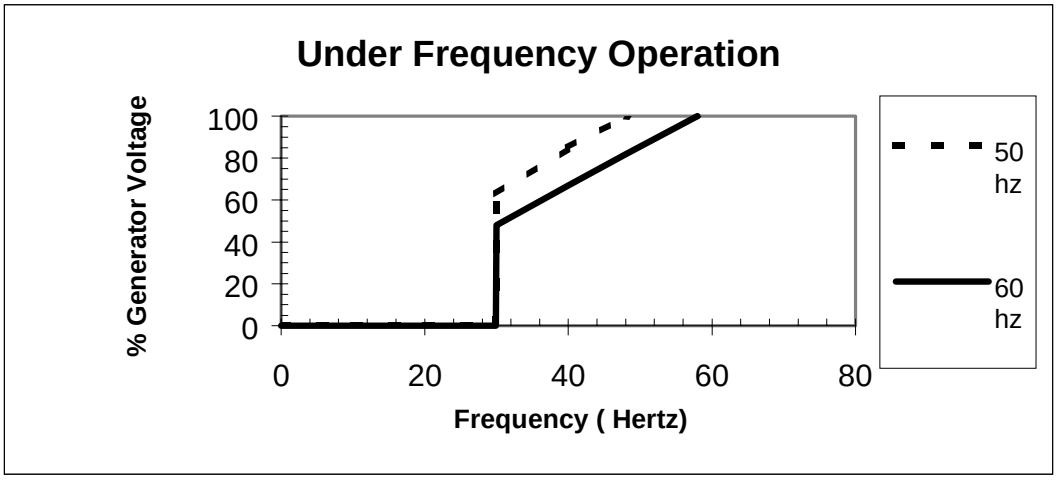

Figure 2 Under frequency operation.

FEATURES

Over-Excitation

The over excitation function monitors the regulator output voltage and causes the regulator to shutdown when the output voltage exceeds the preset trip level of 80 volts for 15 seconds.

Over-Voltage Protection

The over-voltage function monitors the regulator sensed voltage and causes the regulator to shutdown when this sensed voltage exceeds the preset trip level of 115% for 0.75 second.

Over-Temperature Protection

The regulator is equipped with a sensor that monitors the ambient temperature and will turn itself off when the temperature exceeds 70° C.

Loss of Sensing

The loss of sensing function causes the regulator to shutdown if an open circuit occurs in one or more of the sensing leads.

Field Current Limit

The field current limit function monitors regulator output current and limits this current should a heavy load or short circuit occur across the field output terminals.

Environmental Protection

The DVR2000 Digital Voltage Regulator is a totally encapsulated design to limit application problems in harsh environments. The ability of the regulator to withstand harsh environments has been verified through hundreds of hours of testing. This testing includes salt fog tests (ASTM B 17-73), humidity tests, (MIL-STD-705B Method 711-1C), thermal cycles (-40°C to +70°C), shock tests (20 G's in all three planes), and vibration tests (0.035 in. at 20-60 Hz).

EMI Suppression

The DVR2000 Digital Voltage Regulator meets MILSTD-461C Part 9 for electromagnetic conducted and radiated emissions and radiated susceptibility when mounted in the generator conduit box.

WARNING
READ AND UNDERSTAND THIS MANUAL COMPLETELY BEFORE OPERATING THE REGULATOR. BE SURE THE GENERATOR IS OFF BEFORE MAKING ANY REGULATOR CONNECTIONS. REGULATOR DAMAGE OR PERSONAL INJURY MAY RESULT FROM IMPROPER OPERATION.

See Section 2 for detailed description and operation of the features.

SECTION 2 - OPERATION INSTRUCTIONS

MAIN REGULATOR

Front Panel

The DVR2000 Digital Voltage Regulator panel is divided into two (2) areas. The upper area displays the protection indicators and the lower area displays the adjustment indicators. The protection indicators are divided into two (2) rows. The upper row of indicators has protection features that, if activated, will cause the regulator to shutdown either instantaneously or after a time delay. (See “PROTECTIVE FEATURES” in this section of the manual for a more detailed description of each feature.) The lower row of indicators has protection features that do not shutdown the regulator. The DVR2000 has two (2) unmarked protection indicators in the lower row. These indicators are not used on the DVR 2000 regulator.

The lower, or adjustment, area of the regulator panel has three groups of indicators. There are eight (8) indicators that comprise the bar graph, six (6) indicators that identify the standard adjustments and two (2) indicators associated with the VAR/PF feature. The bar graph indicates the relative level of adjustment. When none of the adjustment indicators are lit, the bar graph shows the relative level or setting of fine voltage adjustment. When one of the adjustment indicators is lit, the bar graph shows the relative level or setting of that particular adjustment.

Of the six (6) indicators comprising the standard adjustments the DVR2000 has one (1) unmarked indicator. This indicator is not used on this model. As the select button is pressed, the individual adjustment indicators will be sequentially lit skipping over any unmarked indicator. With the last indicator lit, the next press of the select button will turn off all of the adjustment indicators leaving only the bar graph indicator lit. This again is the mode for fine voltage adjustment. If none of the buttons are pressed (Select, Up, or Down), after one (1) minute, the regulator will automatically switch to the fine voltage adjustment mode.

The VAR/PF adjustment indicators are only used on the “C” model. This model has the VAR/PF control feature available. Unless a “C” model regulator is used, VAR control or PF control is not available and these indicators will not light. With a “C” model regulator, when the VAR or PF adjustment is selected, that indicator will blink when the control feature is not active, and that indicator will be on steady when the control feature is active.
VAR or PF control is not active when regulator terminals 52J and 52K are shorted. VAR or PF control is active when regulator terminals 52J and 52K are open.

Power-up Self Test

Upon applying power to the DVR2000, along with the controlled voltage buildup, the Digital Voltage Regulator performs a self-diagnostics test. This test is completed with the sequencing of the LED display panel. The visual sequencing occurs about 5-6 seconds after power is applied.
If during start-up this LED sequencing does not occur, see Section 5 of this manual.

Once the LED's have sequenced, all of the LED's will be off for a period of 1 second. After that time one (1) LED on the bar graph will be lit. This LED indicates the relative setting of the fine voltage adjustment.

If the regulator was shutdown from a protective feature, when restarted, during the 1 second time period, the LED of the protective feature that commanded shutdown will be lit before indicating the fine voltage setting. The regulator remembers a protective shutdown and indicates the cause of the shutdown during the next start-up.

Parallel Operation

The regulator is equipped with provisions to allow the paralleling of two or more generators using either reactive droop or reactive differential (cross current) compensation with the addition of an external 5 amp 5va current transformer. The paralleling input terminals are labeled CTB1 and CTB2.

PROTECTIVE FEATURES

Over-Excitation

The over-excitation protection feature monitors the regulator output voltage and activates when the output voltage exceeds 80vdc. When activated, the over-excitation LED will light. If the output voltage exceeds this level for 15 seconds, the regulator will turn off. The generator voltage will go to a residual level and the over-excitation LED will remain lit. The generator must be stopped or the input power must be removed for a minimum of 10 seconds to reset the circuit and restore normal operation. Upon start-up, after the LED sequence scan, the over-excitation LED will turn on for one (1) second before entering the fine voltage adjust mode as an indication that the regulator over-excitation function commanded a shutdown.

Over-Voltage

The over-voltage protection feature monitors the regulator-sensed voltage and activates when the sensed voltage exceeds 115% of the adjusted voltage. When activated, the over-voltage LED will light. If the regulator sensed voltage remains above this level for .75 seconds, the regulator will turn off. The generator voltage will go to a residual level and the over-voltage LED will remain lit. The generator must be stopped or the input power must be removed for a minimum of 10 seconds to reset the circuit and restore normal operation. Upon startup, after the LED sequence scan, the over-voltage LED will turn on for one (1) second before entering the fine voltage adjust mode as an indication that the regulator over-voltage function commanded a shutdown.

Over-Temperature

The over-temperature protection feature monitors the regulator temperature and activates when the ambient temperature exceeds 70°C. When activated, the over-temperature LED

will light and the regulator will turn off. The generator voltage will go to a residual level and the over-temperature LED will remain lit. The generator must be stopped or the input power must be removed for a minimum of 10 seconds to reset the circuit and restore normal operation. Upon start-up, after the LED sequence scan, the over-temperature LED will turn on for one (1) second before entering the fine voltage adjust mode as an indication that the regulator over-temperature function commanded a shutdown.

Loss-Of-Sensing

The loss-of-sensing protection feature monitors the continuity of the sensing circuit. If an open circuit occurs in one of the sensing leads, the regulator will shut down and the loss-of-sensing LED will light. The generator voltage will go to a residual level and the loss-of-sensing LED will remain lit. The generator must be stopped or the input power must be removed for a minimum of 10 seconds to reset the circuit and restore normal operation. Upon start-up, after the LED sequence scan, the loss-of-sensing LED will turn on for one (1) second before entering the fine voltage adjust mode as an indication that the regulator loss-of-sensing function commanded a shutdown.

The loss of sensing function will not activate under a generator short circuit condition but rather the regulator will turn full on and deliver maximum forcing power for a minimum of 10 seconds.

CAUTION: Whenever a potential transformer is used for sensing, a break on the primary side of the transformer will cause maximum forcing from the regulator, and the loss of sensing function will not activate.

Under Frequency Operation

The under frequency function allows the generator to operate with a constant volts per hertz characteristic (a linear relationship of voltage with respect to frequency). When not in the under frequency mode, the regulator has flat regulation, constant voltage independent of frequency. The transition frequency is adjustable from 40 Hz to 70 Hz. When in the under frequency mode the under frequency protection indicator will be lit. Adjusting the bar graph down towards minimum reduces the transition frequency.

Field Current Limit

The regulator output is protected with a field current limit feature. Should a heavy load or short circuit occur across the field output terminals, the regulator will limit the output current to 7.5 amps, and the field limit LED along with the over-excitation LED will light. The limiting current automatically resets itself when the output current drops below 7.5 amps. This current limit set point is not adjustable. If the output current does not drop below the current limit set point in 15 seconds the regulator will shutdown. The generator voltage will go to a residual level and the field amp limit and over-excitation LED will remain lit. The generator must be stopped, or the input power must be removed for a minimum of 10 seconds to reset the circuit and restore normal operation. Upon startup, after the LED sequence scan, the field amp limit and over-excitation LED will turn on for one (1) second before entering the fine voltage adjust mode as an indication that the regulator over-excitation function commanded a shut down.

SECTION 3 - INSTALLATION

MOUNTING

The DVR2000 Voltage Regulator is normally located in the generator conduit box, but is also designed to operate in remote switch gear cabinets with convection cooling. When remote mounting, the regulator may either be mounted on the cabinet door with the regulator panel accessible from the front of the cabinet or on the inside panel with the optional remote panel mounting kit, (Part Number BS526434). See Figure 4.

WARNING
THE REGULATOR MUST BE PROPERLY CONNECTED TO A SUITABLE POWER SYSTEM GROUND TO PREVENT THE POSSIBILITY OF ELECTRICAL SHOCK HAZARD AND PROPER OPERATION

CAUTION: DO NOT megger or hi-pot the generator with the regulator connected. DO NOT megger or hi-pot the regulator.

.

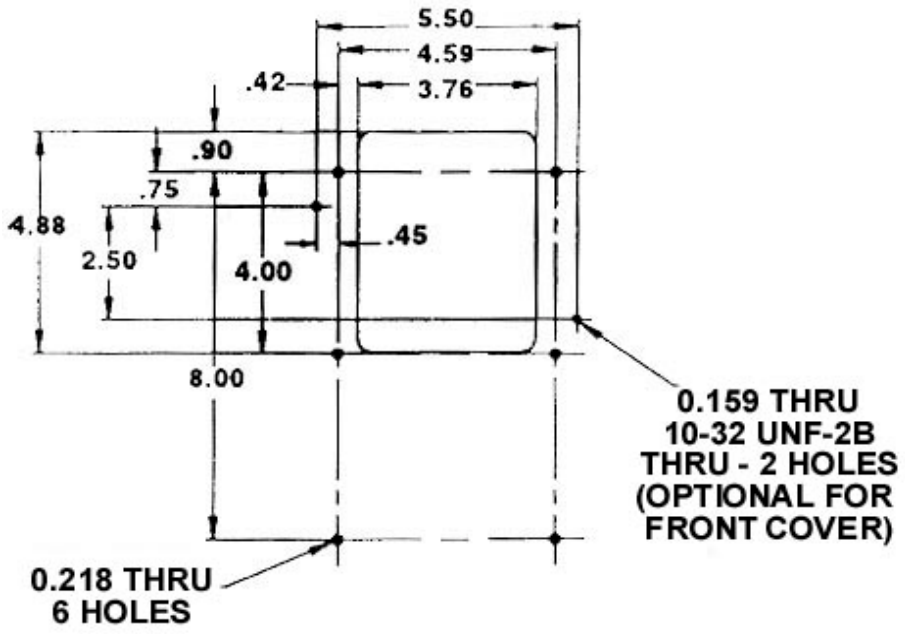

FIGURE 4 - REGULATOR MOUNTING DIMENSIONS

INTERCONNECTIONS

WARNING
BE SURE GENERATOR IS STOPPED AND ALL POWER IS OFF BEFORE MAKING ANY CONNECTIONS.

For typical wiring diagrams see “Outline Drawings and Diagrams” (Section 7).

CAUTION: For use on generator with output voltages greater than 600v, An external potential transformer must be used.

Whenever a potential transformer is used for sensing, an open circuit on the primary side of the transformer will cause maximum forcing from the regulator, and the loss of sensing circuit will not activate. Assure that all connections on the primary side of the transformer are tight and secured from possible vibration.

REMOTE VOLTAGE ADJUST

If a remote voltage adjust is required, a single pole double throw spring return center off toggle switch rated for 240v 1 amp is best suited as a remote adjust. To connect this switch for operation, the center pole or common terminal must be connected to regulator terminal 7. The other two (2) poles or terminals are connected to regulator terminals 6U and 6D. Care is required because “Input Power” voltages are present between 6U, 6D, and 7. This connection can be made using any wire gauges from 12 AWG-22 AWG. The remote voltage adjust can be mounted up to l50 ft from the regulator.

SENSING VOLTAGE

The DVR2000 Digital Voltage Regulator comes equipped for 3-phase sensing as standard. It can optionally be used with single phase sensing by connecting generator terminal T1 to regulator sensing terminal El and generator terminal T3 to regulator terminals E2 & E3.

POWER OUTPUT

The power output terminals of the regulator are labeled F+ and F-. These terminals are connected to the generator field leads respectively. Power Input

The two power input terminals of the regulator are labeled PMG. The leads of the Permanent Magnet Generator are connected to these terminals.

PARALLELING INPUT

The DVR2000 Digital Voltage Regulator comes equipped with parallel provisions as standard. The Paralleling input terminals are labeled CTB1 and CTB2. If paralleling is desired, connect the leads from a standard 5 amp 5va current transformer to these terminals.

The standard generator phase rotation is A-B-C to T1 -T2-T3 with CCW rotation when facing the conduit box or opposite drive end.
With this phase rotation and 3-phase sensing, connect generator lead

T1 to regulator terminal El,
T2 to regulator terminal E2, and
T3 to regulator terminal E3

The paralleling transformer must be in the generator T2 lead with the H1 towards the generator and the XI to regulator terminal CTB2.

With single phase sensing, connect the generator sensing leads:

T1 to regulator terminal El,
T3 to regulator terminal E2, and, E3

The paralleling transformer must be in the generator T2 lead with the H1 towards the generator and the Xl to regulator terminal CTB1.

CAUTION: The polarity and phasing of the current transformer and sensing connections must be observed or improper operation will result.
See Section 7 for typical connection diagrams.

To determine if the paralleling function is operating properly, see Section 4.

If a paralleling switch is desired, this switch or contacts are connected to regulator terminals 52L and 52M. Paralleling is activated when regulator terminals 52L and 52M are open. Paralleling is deactivated when regulator terminals 52L and 52M are shorted.

CAUTION: “Power Input” voltages are present between 52L and 52M.
The paralleling switch **DOES NOT** short the CT terminals.
Note: Regulator terminal 52M is internally common with terminal 7.

The current transformer used for paralleling may also be used for generator current metering.

FIELD FLASHING

A permanent magnet generator powers the "DVR2000 Digital Voltage Regulator" and field flashing is not required or necessary.

SECTION 4 - ADJUSTMENTS AND START-UP PROCEDURE

CAUTION: Read and understand this section completely before attempting any adjustments and starting the generator. If the adjustments do not produce the specified results, proceed to the "Troubleshooting" section.

GENERAL

The new DVR2000 Digital Voltage Regulator is designed such that all adjustments are made outside of the conduit box.

In the adjustment section there are eight (8) LED's that indicate the adjustment feature, eight (8) LED's that comprise the bar graph level indicator, and three (3) push buttons.

The three, (3), push buttons are:
1.) "Select" - Systematically selects the adjustment feature by successive presses of the button.
2.) "Up" - Increases the level of the selected adjustment feature.
3.) "Down" - Decreases the level of the selected adjustment feature.

Successive presses of the "Select" button will step through the various adjustment features. Once the desired adjustment feature is lit the "Up/Down" buttons will increase or decrease the level of the adjustment feature indicated. Once the proper level is reached, the "select" button must be pressed once more in order to save the new level in memory.

While in the "Select" mode, if no button is pressed for a period of one (1) minute, the regulator will automatically save the new level in memory. However, if regulator power is interrupted before the automatic save feature is commanded, that level of adjustment will be lost and the regulator will recall the last previously stored level.
The "Select" button must be pressed in order to step through the adjustment features. The "Up! Down" buttons may be successively pressed to increase or decrease the level, or if held down, the level will automatically increase or decrease at a rate of 2-increments per second. If at any time both the "Up" and the "Down" button are pressed simultaneously the "Up" button takes precedence.
When stepping through the adjustment features, only those features available can be selected. Only regulators with a "C" in the model number will allow the VAR Control or PF Control to be selected. Those models without a "C" in the model number will not allow the VAR Control or PF Control to be selected, and they will be skipped over.

There are up to eight (8) adjustments available on the DVR2000 Digital Voltage Regulator. They are:

1.) Fine Voltage
2.) Coarse Voltage
3.) Stability Range
4.) Stability
5.) Under Frequency
6.) Droop
7.) Power Factor Control
8.) VAR Control

INITIAL ADJUSTMENTS

CAUTION: Read and understand the operation of the individual adjustments before attempting any initial adjustments.

Before starting the generator, the following should be done ;
Remove the 5-amp fuse before starting the generator the first time. Perform all preliminary engine governor adjustments without the regulator energized.

After initial governor adjustments are complete, reinstall the 5-amp fuse and connect only the power input leads or PMG leads to the regulator. Remove all other regulator connections that may be present and temporarily insulate them.

Start and run the generator at rated speed. The regulator will perform the self-test and enter a shut down mode. At this time initial adjustments can be made. To do this, step through each adjustment using the “select” button. For each adjustment press the “up” or “down” button to obtain the level of the LED bar graph as shown in Table 1.

Table 1- LED settings

Adjustment	Voltage	Frequency	Frame	LED
Fine Voltage	All	60/50	All	5
Coarse Voltage	600	60/50	All	7
	480-415	60/50	All	5
	380	60/50	All	3
	240-208	60/50	All	2
	120	60/50	All	1
Stability Range	All	50	430	*1*
	All	60/50	430	2
	All	50	570	3
	All	60/50	570	4
	All	50	740	5
	All	60/50	740	6
	All	60/50	360	7
	Reserved for future use			8
Stability Initial value	Set from “Stability range”			
Droop	All	60/50	All	1
Under Frequency	All	60	All	5
		50	All	3
VAR/PF Control	All	60/50	All	5

After the initial adjustments are made, shut down the generator and connect the remaining regulator leads. The generator may be started and final adjustments may be performed on the regulator.

FINE VOLTAGE ADJUSTMENT

When none of the adjustment features are selected, the “Up/Down” buttons act as the “Fine Voltage” adjustment and the bar graph is a relative indication of that adjustment. Every Up/Down adjustments of the fine voltage adjust feature will increase or decrease the sensed voltage about 0.5 volts. The range of the “Fine Voltage” adjustment is +/- 60v or 120v (min. to max.) of the sensed voltage (See Table 2). After adjustment is made, the “Select” button must be pressed in order to save new level. If no button is pressed for a period of one (1) minute, the regulator will automatically save the setting. If regulator power is interrupted before one (1) minute has passed, the new setting will be lost.

COARSE VOLTAGE ADJUSTMENT

To select “Coarse Voltage” press the “Select” button until the “Coarse Voltage” LED is lit. When selected, the “Up/Down” buttons act as the coarse voltage adjustment and the bar graph is a relative indication of that adjustment. Every Up/Down adjustments of the "Coarse Voltage" adjust will increase or decrease the sensed voltage about 6 volts. The range of the coarse voltage adjustment is 95 - 600v (See Table 2). After adjustment is made, the “Select” button must be pressed in order to save new level. If no button is pressed for a period of one (1) minute, the regulator will automatically save the setting. If regulator power is interrupted before one (1) minute has passed, the new setting will be lost.

REMOTE VOLTAGE ADJUSTMENT

There is a third voltage adjustment, which is not located on the front panel. It is the remote voltage adjustment. The remote voltages adjust functions by remotely changing the fine voltage adjustment setting at the rate of 1 volt / sec. of switch contact. Unlike the regulator pushbuttons, the remote voltages adjust only functions when none of the adjustment features are selected. When any of the adjustment features are selected the remote voltage adjust is disabled. After adjustment is made, the “Select” button must be pressed in order to save the new level. If no button is pressed for a period of one (1) minute, the regulator will automatically save the setting. If regulator power is interrupted before one (1) minute has passed, the new setting will be lost.

The remote voltage adjust is connected to terminals 6U, 6D and 7, respectively. A single pole double throw spring return, with center off, toggle switch rated for 240v lamp is best suited as a remote adjusts. To connect this switch for operation, the center pole or common terminal must be connected to regulator terminal 7. The other two (2) poles or terminals are connected to regulator terminals 6U and 6D. Care is required because “Input Power” voltages are present between 6U & 7 and 6D & 7.

STABILITY RANGE ADJUSTMENT

The “Stability Range” selects the proper control parameters for the frame size generator and excitation system used. There are eight possible ranges. With the “Stability Range” LED lit every push of the “Up” or “Down” button will increase or decrease the bar graph one (1) LED.

To select “Stability Range” press the “Select” button until the “Stability Range” LED is lit. The LED bar graph will indicate the present stability range level. If this is the proper range for the frame size as shown in Table I, then proceed on to the next adjustment. If another stability range level is desired then press the “Up” or “Down” button until the proper LED of the bar graph is lit. Press the “Select” once more to exit “Stability Range” and save the new value. If no button is pressed for a period of one (1) minute the regulator will automatically save the setting. If regulator power is interrupted before one (1) minute has passed the new setting will be lost.
After selecting “Stability Range” as indicated, the regulator will automatically select a stability level that is acceptable for most applications (See “Stability Adjustment”)

See Table 2 for range and resolution of the “Stability Range” adjustment.

TABLE 2

Adjustment	Range	Resolution	Increments per LED
Fine Voltage	128v	0.5v	32
Coarse Voltage	95 to 600v	6.0v	12
Stability Range	1 to 8	1	1
Stability	—	—	32
Droop	0 to 10%	0.25%	5
Under Frequency	40 -70 Hz	0.15 Hz	28
VAR Control	-30% to 100%	1.0%	28
PF Control	-70% to 60% (-45 to 60)	1.0% Max (0.5)	30

Adjusting the stability up or down decreases or increases the gain of the voltage regulator which in turn increases or decreases the response time of the system. Increasing the level of stability will increase the response time. Decreasing the level of stability will decrease the response time.

To select “Stability” press the “Select” button until the “Stability” LED is lit. The LED bar graph will indicate the present stability level. If another stability level is desired, press the “Up” or “Down” button until the proper LED of the bar graph is lit.

Instability is best observed by monitoring the generator output voltage. DO NOT try to monitor stability by monitoring the DC field voltage. Even when stable, a DC voltmeter will show a small amount of fluctuation in the field voltage. If instability is seen in the generator output voltage, press and hold the “Up” button until the generator is stable again. Apply load. If the generator remains stable, no further adjustment is needed. If the generator is unstable, press and hold the “Up” button until the generator is stable again. Reject and apply the load one (1) to two (2) more times. The generator should remain

stable. If the generator is not stable or if the response is too slow, then either increase or decrease the stability level as desired one (1) to two (‘2) increments at a time applying and rejecting load between each adjustment until optimum performance is achieved. Press the “Select” once more to exit “Stability” and save the new value. If no button is pressed for a period of one (1) minute, the regulator will automatically save the setting. If regulator power is interrupted before one (1) minute has passed, the new setting will be lost.

UNDER FREQUENCY ADJUSTMENT

The “Under Frequency” adjustment changes the frequency at which the regulator begins to operate on a constant volts/hertz ramp. Increasing this adjustment increases the transition frequency. Decreasing this adjustment decreases the transition frequency.

To select “Under Frequency” press the “Select” button until the “Under Frequency” LED is lit. The LED bar graph
will indicate the present transition level. If another transition level is desired, then press the “Up” or “Down” button until the proper LED of the bar graph is lit (See Figure 5).

Figure 5
Under Frequency Adjustment

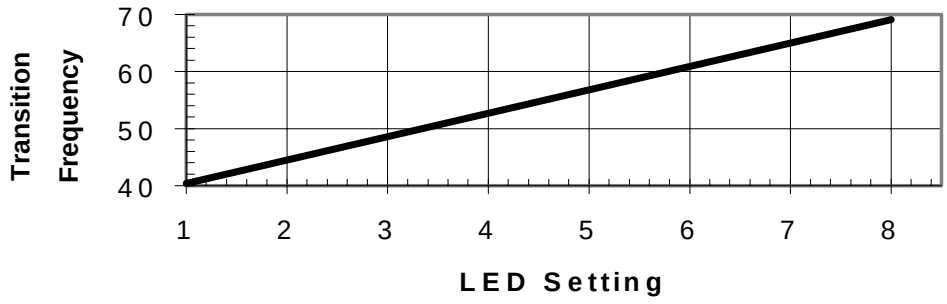

To set the transition level to a known frequency, either of two (2) methods of adjustment may be used.

The first method is to:

A.) Select the “Under Frequency Adjust mode”.
B.) Slow the engine speed down until the generator output frequency is the transition frequency.
C.) Adjust the under frequency level until the “Under Frequency” LED in the “Protection Indicators” section of the front panel just lights.
D.) Press the “Select” button to save the new value. If no button is pressed for a period of one (1) minute, the regulator will automatically save the setting. If regulator power is interrupted before one (1) minute has passed, the new setting will be lost.
E.) Restore the generator to normal operating speed.

The second method is to:

A.) Select the “Under Frequency Adjust mode”:
B.) Adjust the under frequency level until the “Under Frequency” LED in the “Protection Indicators” section of the front panel just lights.
C.) Adjust the under frequency level one (1) increment down. The “Under Frequency” LED in the “Protection Indicators” section of the front panel should turn off. If the LED does not turn off, keep adjusting the under frequency down one (1) increment at a time until the LED does turn off.
D.) Determine the transition frequency, and subtract it from the running frequency.
E.) Divide the difference by 0.15.
F.) Round the answer to the nearest whole number.
G.) Press the “Down” button the number of times calculated in step F.
H.) Press the “Select” button to save the new value. If no button is pressed for a period of one (1) minute, the regulator will automatically save the setting. If regulator power is interrupted before one (1) minute has passed, the new setting will be lost.

See Table 2 for range and resolution of the “Under Frequency” adjustment.

DROOP ADJUSTMENT

The “Droop” control feature is used when paralleling generators. Increasing the level of the “Droop” adjustment increases the amount of generator voltage droop with application of reactive load. A five amp signal from a 5a 5va CT into terminal CTB1 and CTB2 will give at least 10% voltage droop with the application of a 0.8 PF load and the adjustment level set to maximum.
Two (2) states or conditions exist with the “Droop” control feature. They are:

1.) Inactive - The feature is available but not functioning.
2.) Active - The feature is available and functioning.

The “Droop” control is activated when regulator terminals 52L and 52M are open. The Droop control is de-activated when regulator terminals 52L and 52M are shorted.

CAUTION: “Power Input” voltages are present between 52L and 52M.

NOTE: Regulator terminal 52M is internally common with terminal 7.

To select “Droop” press the “Select” button until the “Droop” LED is lit. The LED bar graph will indicate the relative level of droop adjustment. If another level is desired, press the “Up” or “Down” button until the proper LED of the bar graph is lit.

The best way to set the droop is to run each generator individually, and apply rated or near rated current at 0.8 PF. The amount of droop can then be set directly.

There is an alternate method of adjusting the generator droop. With the droop CT installed in the generator T2 lead (See Section 7), temporarily connect generator-sensing lead
El to generator lead T2
E2 & E3 to generator lead T1.

WARNING: BE SURE GENERATOR IS STOPPED AND ALL POWER IS OFF BEFORE MAKING ANY CONNECTIONS.

Run each generator individually and apply rated or near rated current at unity PF. The amount of droop can then be set by adjusting the "Droop" adjustment as needed for the application

If when adjusting generator droop the generator output voltage does not decrease with application of load, recheck the CT polarity and the sensing lead connections.

After the adjustments are complete, reconnect the regulator sensing leads as outlined in Section 7. When the generators are operated in parallel they will share load equally. If no reactive load is present, the generator voltage should not droop. If it does droop, recheck sensing connections, CT connections, and CT polarity. If necessary repeat the adjustment procedure.

Droop can also be set by adjusting to the LED level shown in Figure 6 for the amount of droop required.

See Table 2 for range and resolution of the Droop" adjustment.

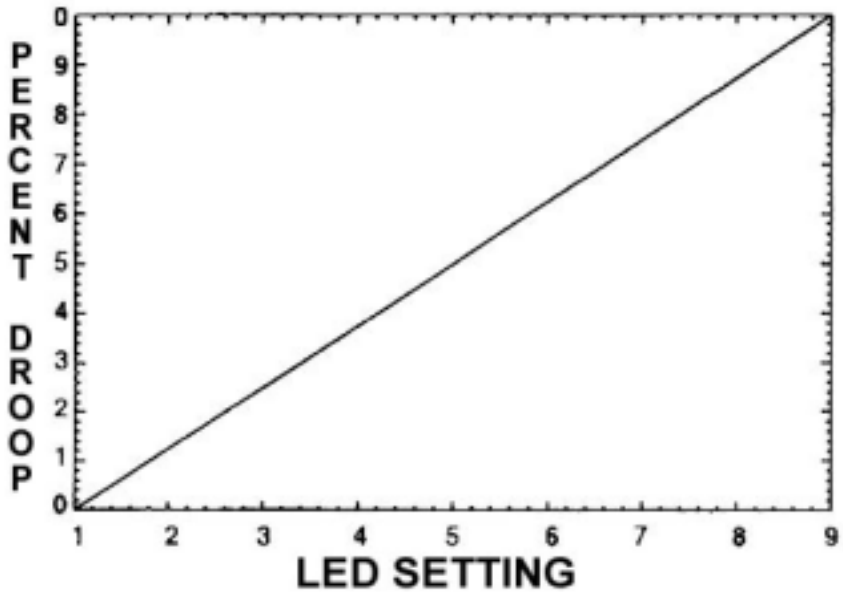

FIGURE 6 - DROOP ADJUSTMENT

After the droop adjustment is complete, press the "Select" button to save the new value. If no button is pressed for a period of one (1) minute the regulator will automatically save the setting. If regulator power is interrupted before one (1) minute has passed, the new setting will be lost.

REACTIVE DIFFERENTIAL (CROSS CURRENT) ADJUSTMENT

With the cross current loop disabled, set up the generators for satisfactory simple droop operation. Then reconnect the cross current loop retaining all settings. Operate the system to verify satisfactory performance.

When operating in parallel reactive differential mode (cross current), attention must be paid to the use of the burden resistor shown on the connection diagram. The burden resistor should have a value approximately ten (10) times the cross current loop resistance for proper differential operation. The value of 0.1 ohm is a suggested minimum value. The volt-ampere (VA) capacity of the paralleling Current Transformers should be considered after sizing the burden resistor.

VAR/PF ADJUSTMENT

The “VAR/PF” control feature is used when paralleling a generator to utility. “VAR” or “PF” control is only available on “C” model regulators. Increasing the level of the “VAR” or “PF” adjustment increases the amount of field excitation. Decreasing the level of the “VAR” or “PF” adjustment decreases the amount of field excitation.

Two (2) states or conditions exist with the “VAR” or “PF” control feature. They are:

1.) Inactive - The feature is available but not functioning.
2.) Active - The feature is available and functioning.

The VAR or PF control is activated when regulator terminals 52J and 52K are open.
The VAR or PF control is de-activated when regulator terminals 52J and 52K are shorted.
CAUTION: “Power Input” voltage are present between 52J and 52K.
NOTE: Regulator terminal 52K is internally common with terminal 7.

To select "VAR" control or "PF" control, press the "Select" button until the proper LED is lit. The led bar graph will indicate the relative level of adjustment. If another level is desired, press the "Up" or "Down" button until the proper LED of the bar graph is lit. See Figure 7A or 7B for adjustment settings.

To switch or toggle between "VAR" Control and "PF" Control select and **HOLD** the “Select” button down. While holding the select button, successive pressing of the “Up” button will alternate control between "VAR" and "PF". When the proper control is selected, release the “Select” button. With the “Select” button released, the level of control can be adjusted using the “Up” “Down” buttons. After the control level is djusted, pressing the “Select” button once more will store the selection and adjustment level in memory.
The “VAR/PF” control feature is the only feature where the adjustment LED does indicate more than just a selected or deselected function.
When not selected, the “VAR/PF’ LED's are always “OFF”.

When “VAR/PF” control feature is not available, the “VAR/PF” LED's cannot be selected. Only when "VAR" or "PF" control is available can the “VAR/PF” LED's be selected.
When selected but not active, the “VAR” or “PF” LED will blink and the bar graph will indicate the relative level of control.
When selected and active, the “VAR” or “PF” LED will be on steady and the bar graph will indicate the relative Level of control.

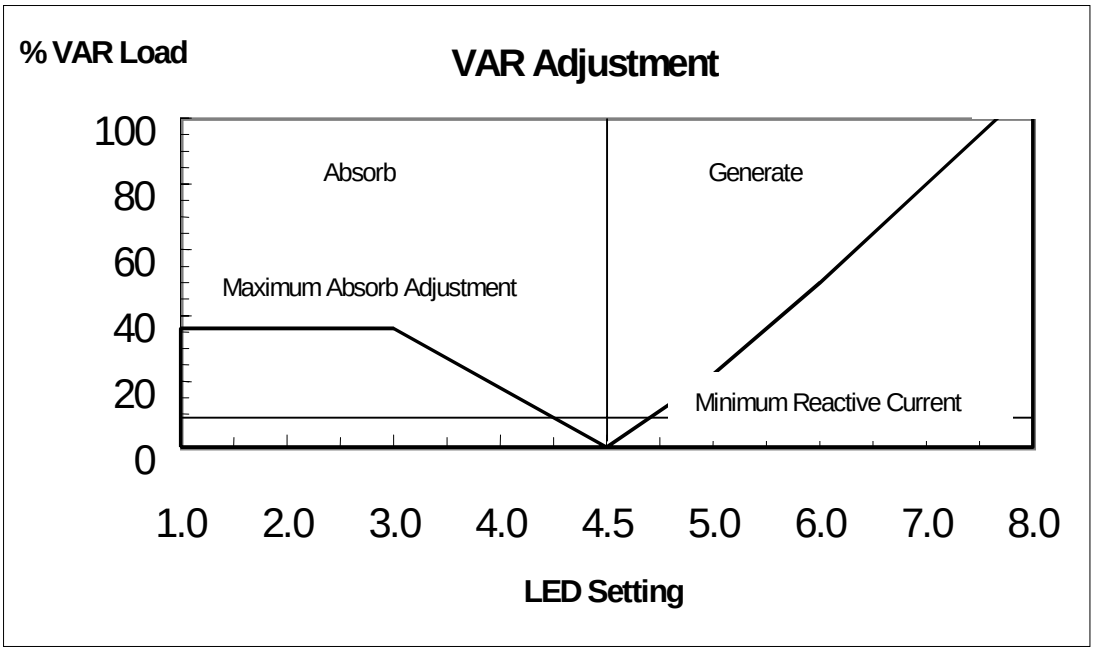

FIGURE 7A- VAR ADJUSTMENT

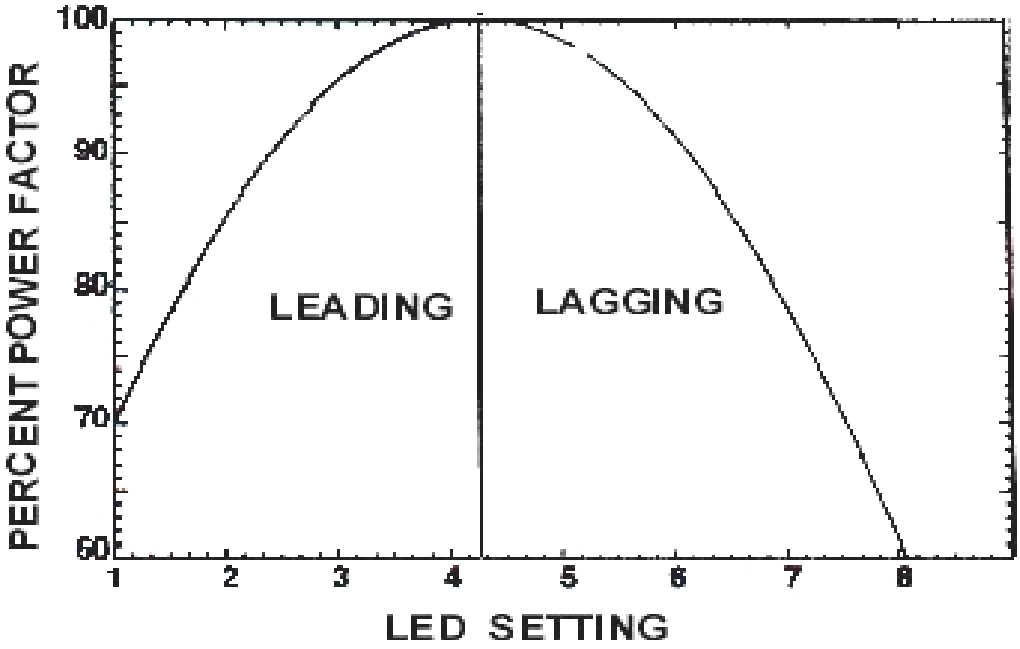

FIGURE 7B - POWER FACTOR ADJUSTMENT

SECTION 5 - TROUBLE SHOOTING

Symptom	Cause	Action
No voltage buildup	F1, F2 leads not connected	Connect field leads Fl and F2.
	Input Power leads not connected.	Connect PMG leads.
	No PMG voltage- Possible shorted 7.5uf capacitor or defective PMG. (Refer to generator manual for PMG replacement procedure)	Check PMG voltage. Normally 180-200v with 7.5uf capacitor connected and 150-160v without capacitor connected.
	Fuse blown.	Replace fuse with Littelfuse type 314005 or Bussman type ABC-5.
	Generator is not up to speed.	Increase generator speed (Consult prime mover manual).
	Coarse voltages adjust set to minimum.	Increase coarse voltage adjust (See Section 4).
	Over-excitation LED on.	Exciter field voltage exceeds 80v. Check generator and/or load conditions. Interrupt input power to regulator or shut down generator for a minimum of 10 seconds.
	L.O.S. LED on.	Loss of sensing - check sensing leads for proper connections. Interrupt input power to regulator or shut down generator for a minimum of 20 seconds.
	Over-voltage LED on.	PMG and field leads grounded. Isolate both PMG and field leads from ground. Generator voltage exceeded 115% for 3/4 sec. Interrupt input power to regulator or shut down generator for a minimum of 10 seconds.
	Over-temperature LED on.	Regulator temperature too high. Increase cooling air to regulator or let ambient cool down. Interrupt input power to regulator or shut down generator for a minimum of 10 seconds.
	Defective generator.	Consult generator manual.

Symptom	Cause	Action
Output Voltage Low	Coarse Voltage Adjust set low. Fine Voltage Adjust set low.	Increase Coarse Voltage Adjustment (Section 4). Increase Fine Voltage Adjustment (Section 4).
Output Voltage High	Coarse Voltage Adjust set high. Fine Voltage Adjust set high.	Decrease Coarse Voltage Adjustment (Section 4). Decrease Fine Voltage Adjustment (Section 4).
Generator does not respond as adjustments are made.	Regulator software is locked.	Reset regulator. Interrupt input power to regulator or shut down generator for a minimum of 10 seconds.
Poor Voltage Regulation	Regulator not properly grounded. Field leads grounded. PMG leads grounded.	Ground regulator. Check field leads and isolate from ground. Check PMG leads and isolate from ground.
Remote Voltage Control Operates Backwards.	Control wired backwards.	Reverse the wiring on the remote voltage control (Section 3).
Remote Voltage Control functions in one direction only.	Center terminal reversed with end terminal, One terminal not wired. Both “6U” and “6D” are being connected to “7” at the same time.	Recheck the wiring on the remote voltage control (Section 3).
Generator Voltage Hunting	Stability Range not set properly. Stability not set properly. Intermittent connection to PMG terminals. Intermittent connection to sensing terminals.	Adjust Stability Range Adjust Stability (Section 4). Check wiring to PMG terminals. Check wiring to sensing terminal

Symptom	Cause	Action
Under Frequency LED on.	Operating at reduced speed. Under Frequency incorrectly adjusted. Intermittent connection to PMG terminals.	Increase generator speed. Adjust Under Frequency (Section4). Check wiring to PMG terminals.
Over-excitation LED on.	Generator overloaded. Generator defective.	Reduce generator load. Check exciter rotor winding resistance. (See generator manual). Check exciter field winding resistance. (See generator manual) Check rotating rectifier for shorted diodes. (See generator manual) Check main rotor winding resistance. (See generator manual)
Field Limit LED on. **(Over-excitation LED on).**	Regulator operating in field current limit.	Check for F+ F- short. Check exciter field winding resistance. (See generator manual) Check exciter rotor winding resistance. See generator manual) Check rotating rectifier for shorted diodes. (See generator manual) Check main rotor winding resistance. (See generator manual)
No Droop Control or Negative Droop (Generator does not share load).	Open connection to terminals CTB1& CTB2. Droop transformer connected back-wards. Droop transformer is in the wrong phase Sensing connections incorrect.	Check connection to terminals CTBI & CTB2 and paralleling transformer. Reverse connections to terminals CTBI & CTB2. Refer to Section 3 and Section 7 for proper installation. Refer to Section 3 and Section7 for proper sensing connections

Symptom	Cause	Action
No LED scans during power up or long time for LED scans to be accomplished.	Regulator improperly connected.	Check connections to regulator.
All LED's off but regulator working.	Regulator software is locked.	Reset regulator. Interrupt input power to regulator for minimum of 10 seconds.
Long time for LED scan to be accomplished,	Exciter field (F-, F+) circuit is open, or has high resistance.	Check exciter field terminals and resistance.
Voltage does not build up after engine is idled.	Regulator software locks up during engine idle.	Add additional contacts to idle/run switch to open PMG power during idle.
Regulator fails immediately after replacement	Shorted diode on exciter.	Check and replace shorted diode.

SECTION 7 - DRAWINGS

DIMENSIONS OF THE DVR2000 & DVR2000C

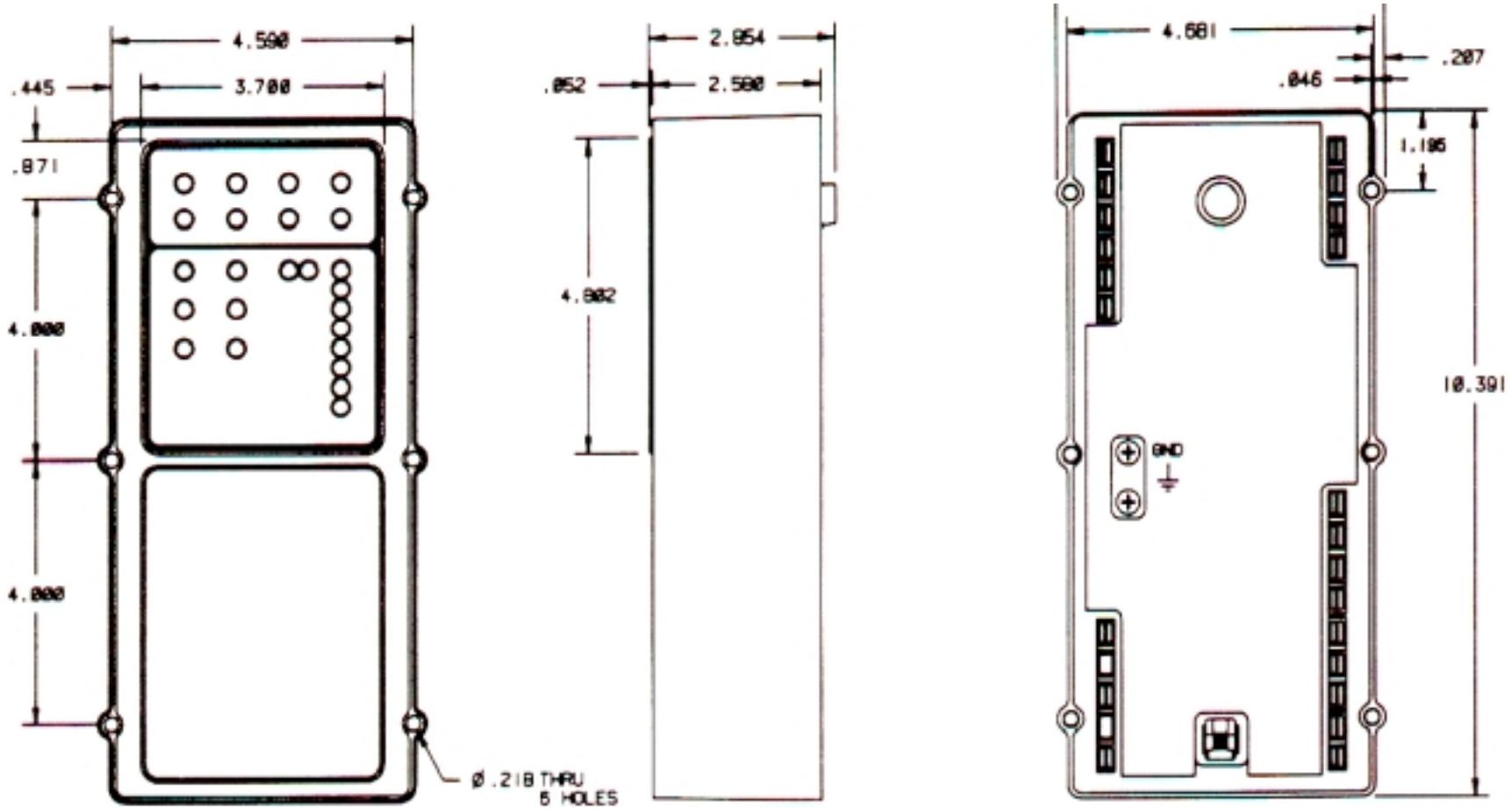

TYPICAL CONNECTION - THREE PHASE SENSING (95-600 VOLTS)

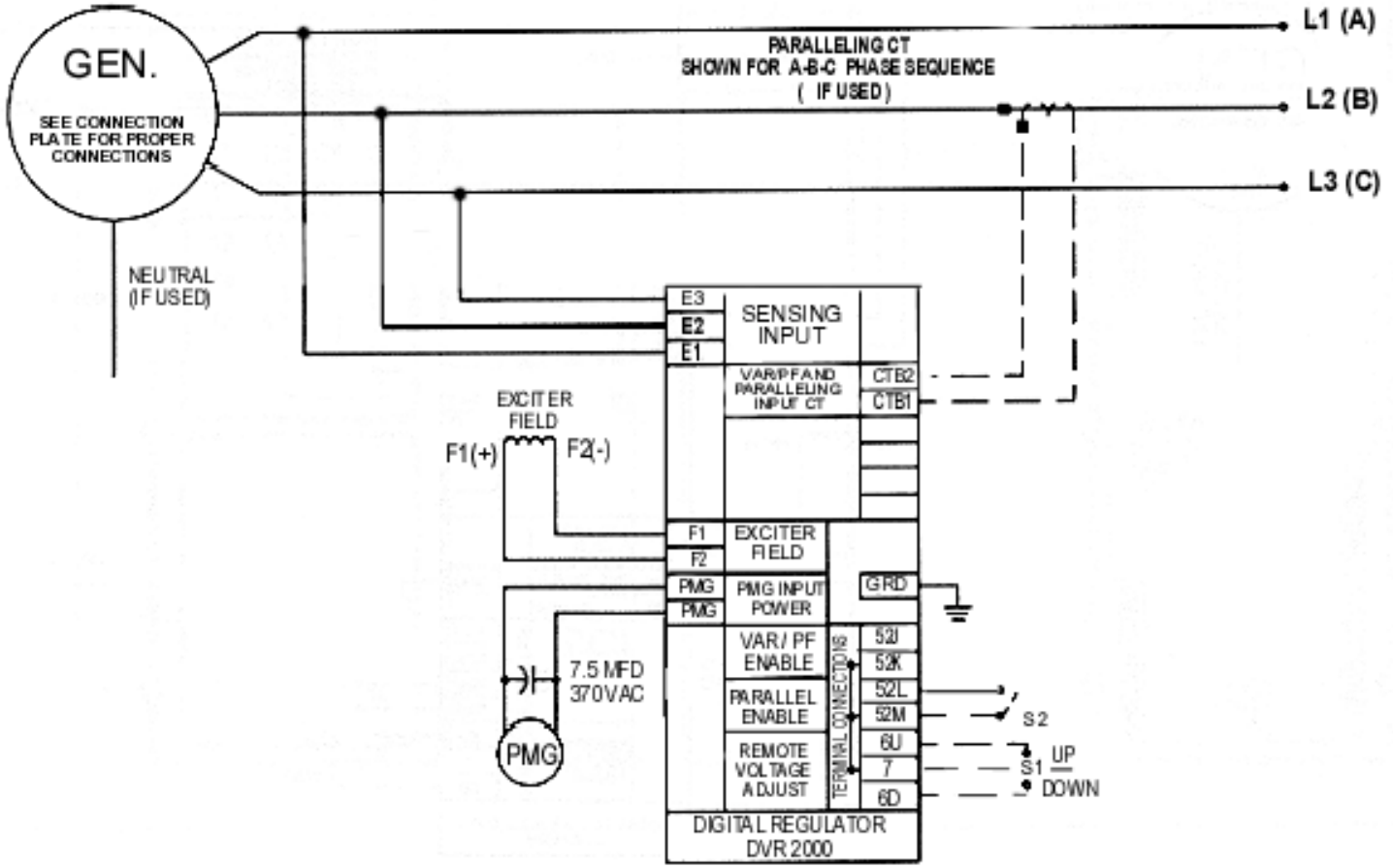

Katolight Service - Master Repair Manual - Page 1126

TYPICAL CONNECTION - SINGLE PHASE SENSING (95-600 VOLTS)

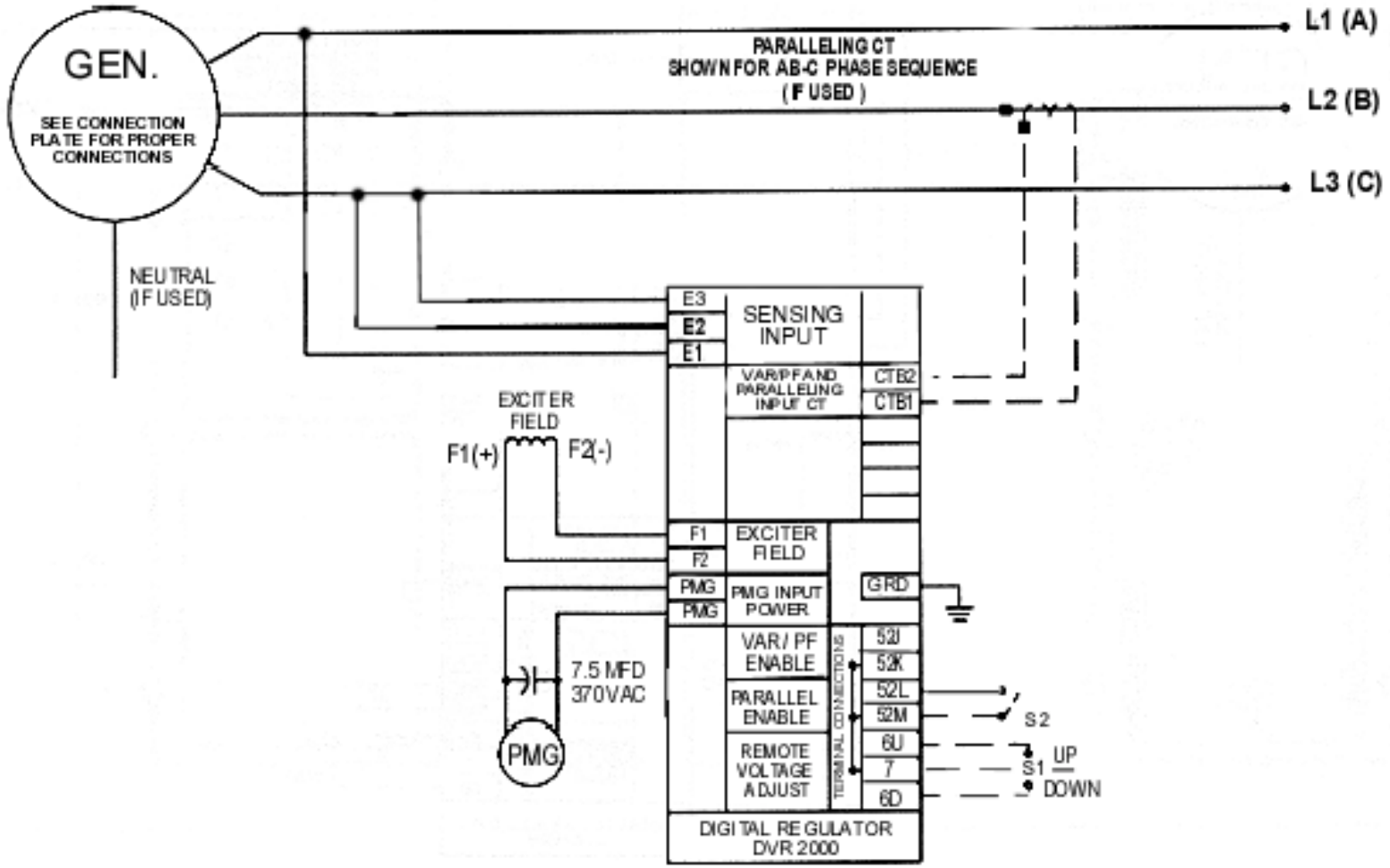

TYPICAL CONNECTION - THREE PHASE SENSING (601-6600 VOLTS)

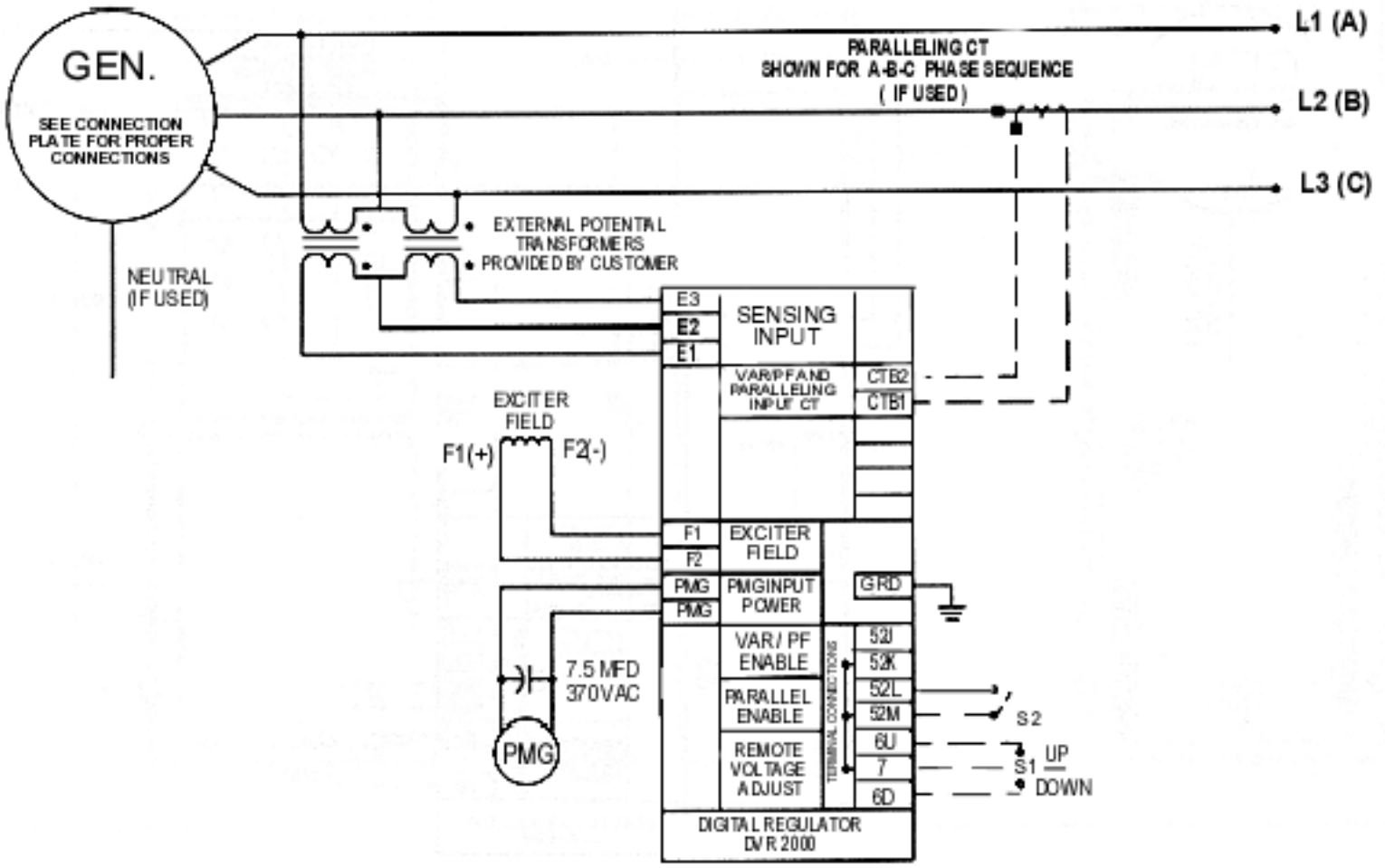

TYPICAL CONNECTION - SINGLE PHASE SENSING (601-6600 VOLTS)

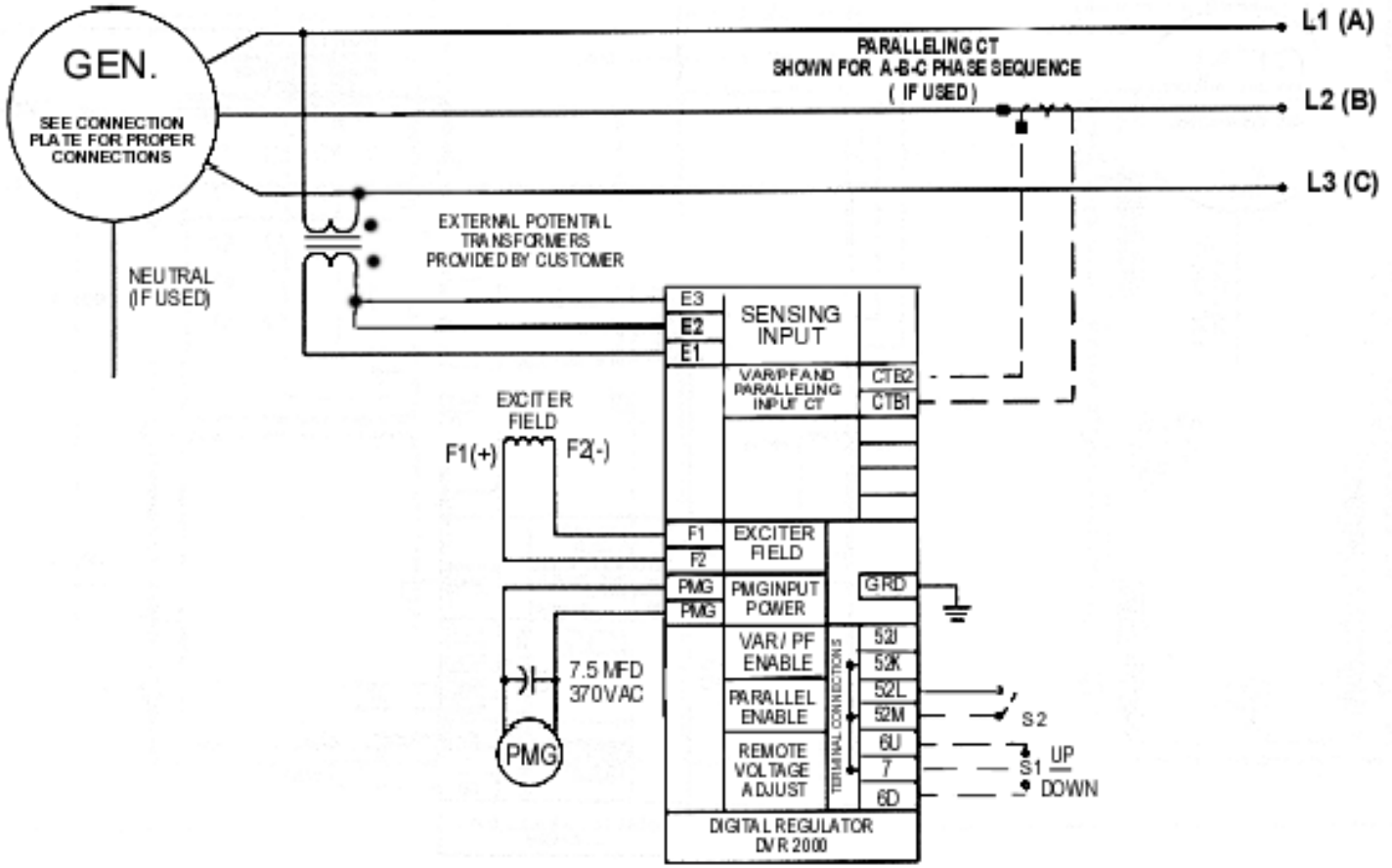

Katolight Service - Master Repair Manual - Page 1129

TYPICAL CONNECTION WITH REACTIVE DIFFERENTIAL PARALLELING

THREE PHASE SENSING (95-600 VOLTS)

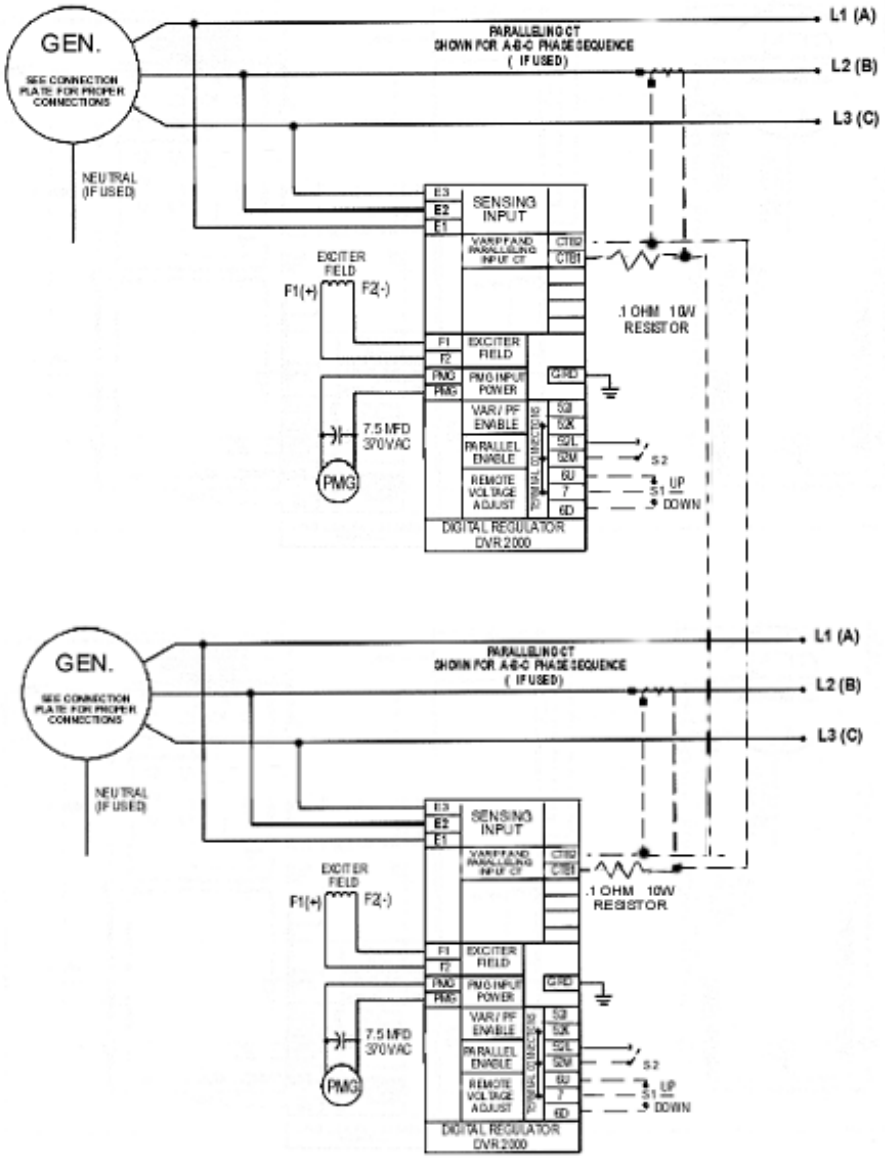

TYPICAL CONNECTION WITH VAR / PF CONTROL

THREE PHASE SENSING (95-600 VOLTS)

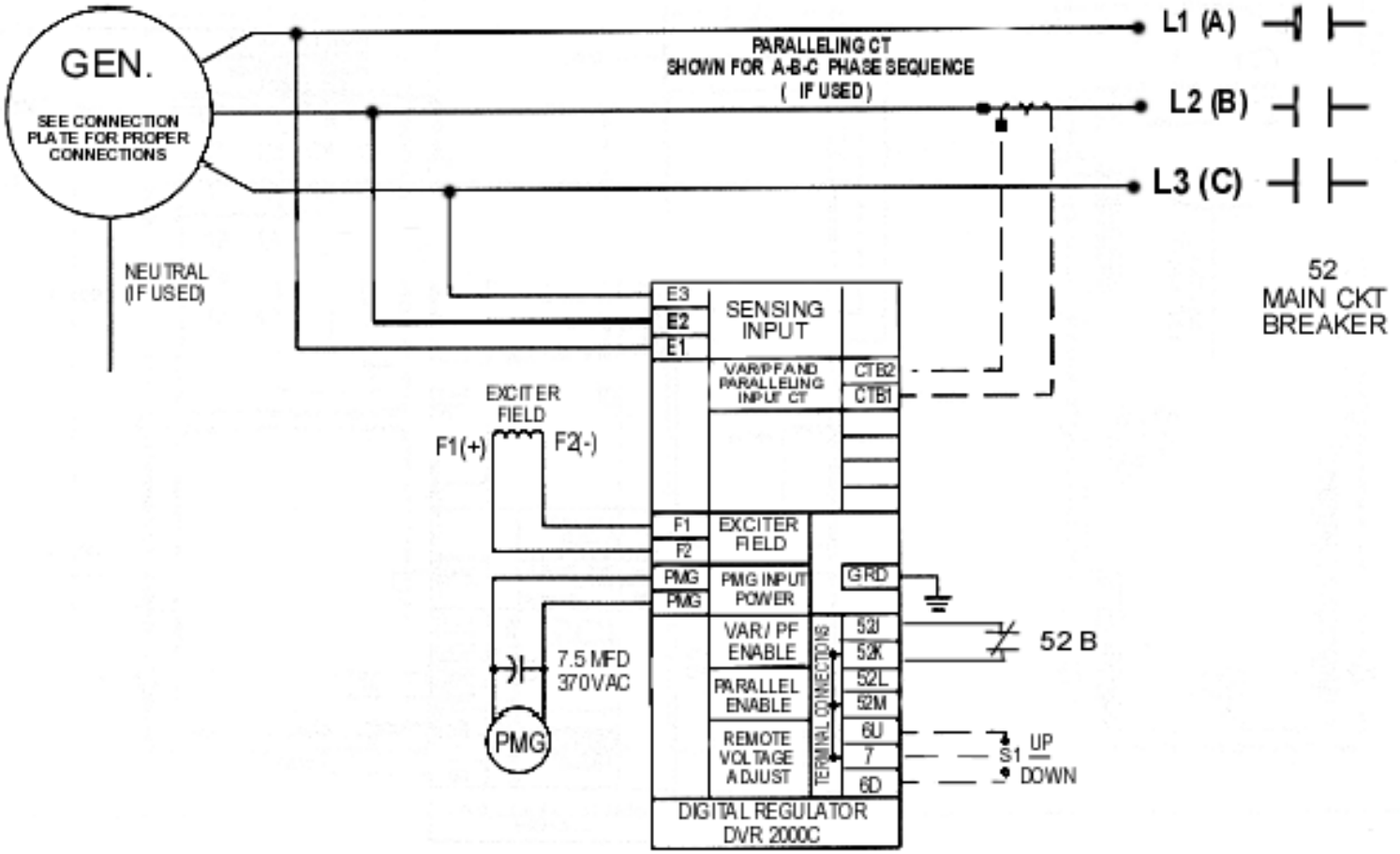

TYPICAL CONNECTION WITH VAR / PF CONTROL

SINGLE PHASE SENSING AND ISOLATION TRANSFORMER

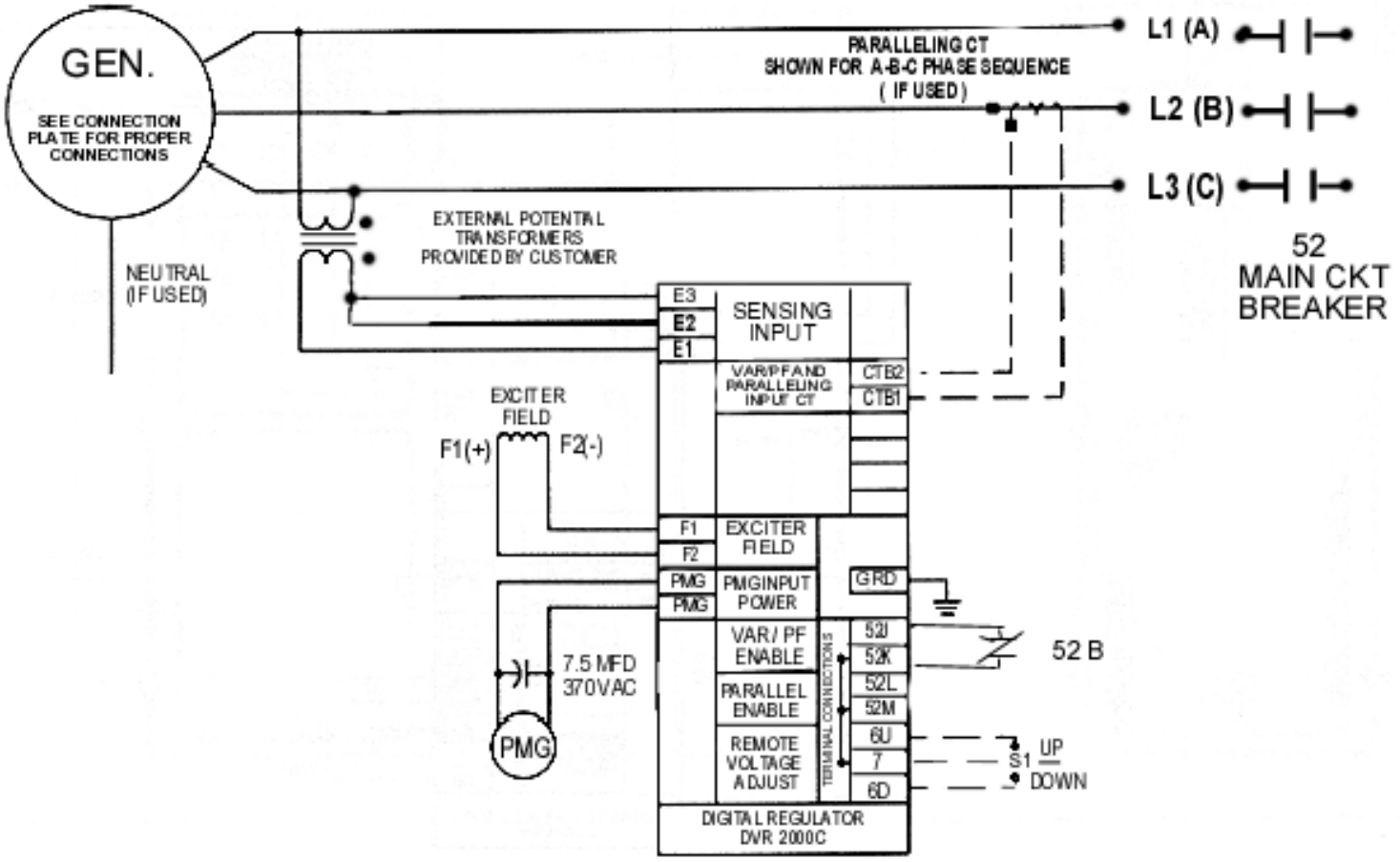

KATOLIGHT CORPORATION

DVR®2000E

Installation, Operation, and Maintenance Manual

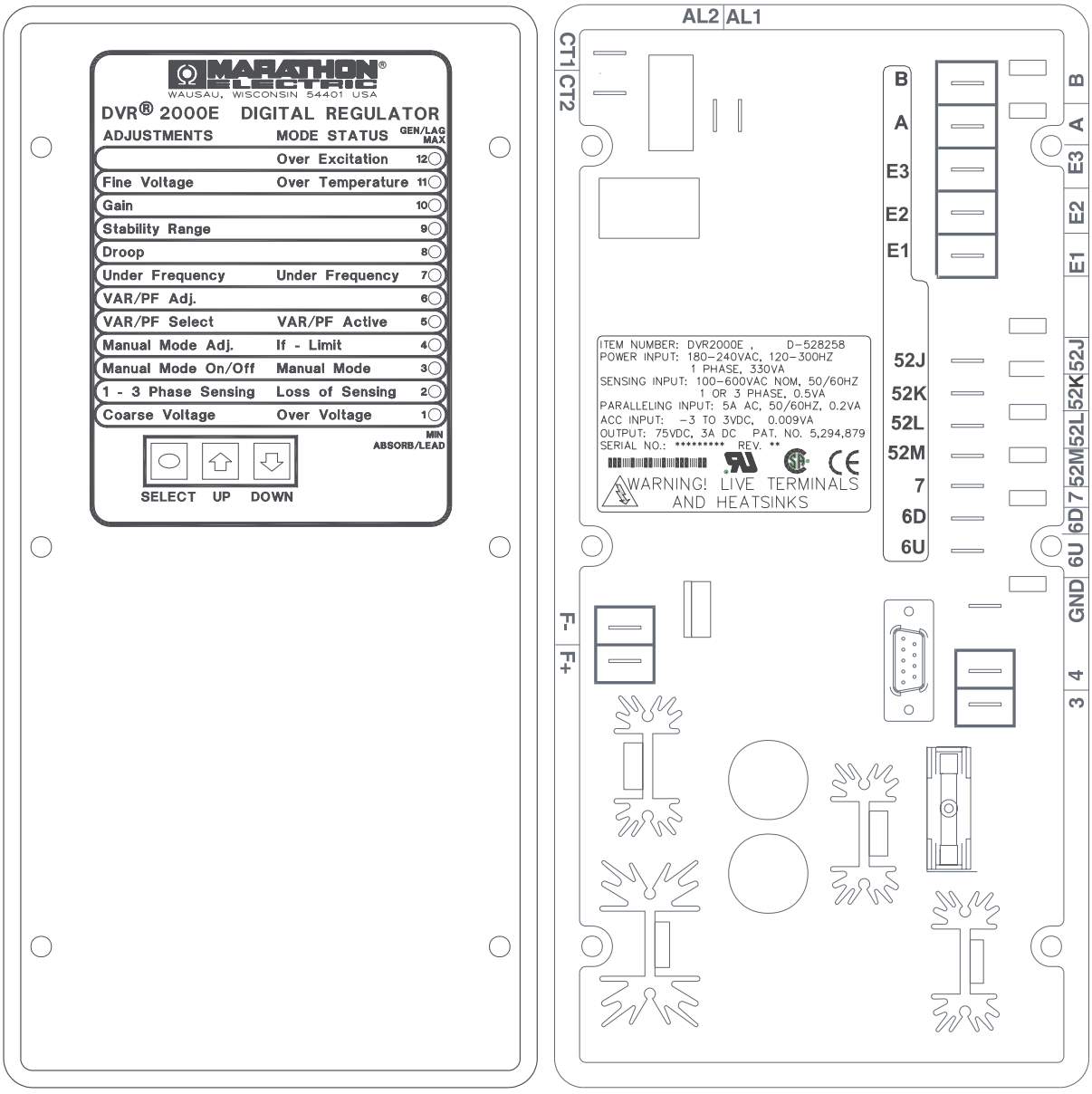

INTRODUCTION

This manual provides information concerning the operation and installation of the DVR2000E, Digital Voltage Regulator. To accomplish this, the following is provided:

- General Information and Specifications
- Human-Machine Interface
- Functional Description
- Installation
- Software for Windows Operating System
- Software for the Palm Operating System Platform
- Maintenance and Troubleshooting

WARNING!

DVR2000E presents an electric shock risk. Terminals and heat sinks are live at potentially lethal voltages. This high voltage may cause electrical shock that could result in injury or death.

To avoid personal injury or equipment damage, only qualified personnel should perform the procedures presented in this manual.

CAUTION

Meggers and high potential test equipment should be used with extreme care. Incorrect use of such equipment could damage components contained in the device.

It is not the intention of this manual to cover all details and variations in equipment, nor does this manual provide data for every possible contingency regarding installation or operation. The availability and design of all features and options are subject to modification without notice.

CONTENTS

A table of contents in the front of each section provides detailed information for that section. The sections in this manual are as follows.

Section 1 General Information 3

Section 2 Human-Machine Interface 7

Section 3 Functional Description 17

Section 4 Installation 25

Section 5 DVR2000E-32 Software for Windows® OS 38

Section 6 DVR2000E Software for the Palm OS® Platform 68

Section 7 Maintenance and Troubleshooting 85

SECTION 1 • GENERAL INFORMATION

TABLE OF CONTENTS

Section 1

SECTION 1 • GENERAL INFORMATION 4

GENERAL 4
FEATURES 4
SPECIFICATIONS 4
Operating Power 5
Generator Voltage Sensing 5
Generator Current Sensing 5
Contact Input Circuits 5
Common Alarm Output 5
Field Output 5
AVR Operating Mode 5
FCR (Manual) Operating Mode 5
Var Operating Mode (Optional) 5
PF Operating Mode (Optional) 5
Parallel Compensation 5
Communication Port 5
Field Overvoltage Protection 5
Field Overcurrent Protection 5
Generator Overvoltage Protection 5
Soft-Start Function 6
Analog (Auxiliary) Input 6
Metering 6
Environment 6
Type Tests 6
Physical 6

SECTION 1 • GENERAL INFORMATION

Section 1

GENERAL

The DVR2000E is an electronic, solid-state, microprocessor-based control device. The DVR2000E regulates the output voltage of a brushless, ac generator by controlling the current into the generator exciter field. Input power to the DVR2000E is from a multi-pole, high-frequency, permanent magnet generator (PMG).

The DVR2000E is supplied in an encapsulated package designed for behind-the-panel mounting. The DVR2000E is held in place by thread-forming screws that thread into its plastic shell. Front panel indicators (LEDs) annunciate regulator status and system conditions. DVR2000E connections are made through quarter-inch, quick-connect terminals on the rear panel. A 9-pin DB-9 type connector on the rear panel provides communication between the DVR2000E and an IBM compatible PC.

FEATURES

DVR2000E units have the following features and capabilities.

- Four control modes: automatic voltage regulation (AVR), manual or field current regulation (FCR), power factor (PF) regulation, and reactive power (Var) regulation.
- Programmable stability settings.
- Soft start control with an adjustable time setting in AVR control mode.
- Overexcitation (OEL) limiting in AVR, Var, and PF control modes.
- Underfrequency (volts/hertz) regulation.
- Crowbar circuitry protects the field.
- Overtemperature protection.
- Three-phase or single-phase generator voltage (RMS) sensing/regulation in AVR mode.
- Single-phase generator current sensing for metering and regulation purposes.
- Field current and field voltage sensing.
- Four contact sensing inputs for system interface.
- One common output relay for alarm indication and trip functions.
- Six protection functions (overexcitation shutdown, generator overvoltage shutdown, DVR overtemperature shutdown, loss of generator sensing shutdown, overexcitation limiting and crowbar shutdown).
- Generator paralleling with reactive droop compensation and reactive differential compensation.
- Front-panel human-machine interface (HMI) indicates system and DVR2000E status and gives the ability to make setting changes at the front panel.
- Rear RS-232 communication port for personal computer communication using DVR2000E-32 Windows® based software for fast, user-friendly, setup and control.

SPECIFICATIONS

DVR2000E electrical and physical specifications are listed in the following paragraphs. The adjustment increments shown apply to the PC software. Adjustment increments for the Front Panel Controls are listed in Section 2.

Operating Power

Single-Phase:	180 to 240 Vac
Frequency Range:	200 to 360 Hz
Burden:	350 VA
Terminals:	3, 4

Generator Voltage Sensing

Type:	1-phase/3-phase, 4 ranges, 50/60 Hz
Terminals:	E1, E2, E3
Burden:	<1 VA per phase
Range 1:	120 Vac (100 to 140 Vac)
Range 2:	240 Vac (200 to 280 Vac)
Range 3:	480 Vac (400 to 560 Vac)
Range 4:	600 Vac

Generator Current Sensing

Type:	1-phase (BØ), 50/60 Hz
Rating:	5 Aac maximum continuous
Burden:	<0.1 VA
Terminals:	CT1, CT2

Contact Input Circuits

Type:	Dry Contact
Interrogation Voltage:	13 Vdc
Terminals	
Unit/Parallel Control:	52L, 52M
Raise:	6U, 7
Lower:	6D, 7
Var/PF Enable	52J, 52K

Common Alarm Output

Type:	Form A
Rated Load:	7 Aac/7 Adc continuous
Make:	30 Aac/30 Adc, carry for 0.2 sec
Break:	7 Aac/0.1 Adc
Operating Voltage:	240 Vac/250 Vdc maximum
Terminals:	AL1, AL2

Field Output

Continuous Rating:	75 Vdc, 3.0 Adc
10 Second Forcing Rating	
200 Vac Power Input:	150 Vdc, 7.5 Adc
Field Resistance:	18 Ω minimum
Terminals:	F+, F-

AVR Operating Mode

Adjustment Range:	See generator voltage sensing
Voltage Regulation:	±0.25% over load range at rated power factor and constant generator frequency.
Temperature Drift:	±0.5% for a 40°C change
Response Time:	≤1 cycle
Underfrequency (V/Hz)	
Characteristic:	Slope from 1 to 3PU is adjustable in 0.01 increments.
Range:	40 to 65 Hz
Increment:	0.01 Hz

FCR (Manual) Operating Mode

Adjustment Range:	0 to 3 Adc
Increment:	0.01 A

Var Operating Mode (Optional)

Adjustment Range:	100% to –100%
Increment:	0.1%

PF Operating Mode (Optional)

Adjustment Range:	0.6 lead to 0.6 lag
Increment:	0.001

Parallel Compensation

Modes:	Reactive Droop and Reactive Differential (cross-current)*
Droop	
Adjustment Range:	0 to 10%
Increment:	0.01%

*Burden can exceed 1 VA if external resistors are added to the CT circuit.

Communication Port

Interface:	Full Duplex RS-232
Connection:	DB-9 connector on rear panel
Baud:	4800
Data Bits:	8
Parity:	None
Stop Bit:	1

Field Overvoltage Protection

Pickup:	0 -250 Vdc
Time Delay:	15 seconds (fixed)

Field Overcurrent Protection

Pickup	
Adjustment Range:	0 to 7.5 Adc
Increment:	0.001 Adc
Time Delay	
Adjustment Range:	0 to 10 seconds
Increment:	1 second

Generator Overvoltage Protection

Pickup	
Range:	105 to 120% of setpoint
Increment:	1.0%
Time Delay	
Fixed Setting:	0.75 seconds

Soft-Start Function

Time Adjust Range:	1 to 120 seconds
Increment:	1 second

Analog (Auxiliary) Input

Voltage Range:	-3 Vdc to +3 Vdc
Setpoint Range:	-30% to +30% shift
Burden:	1 kΩ
Terminals:	A, B

Metering

Accuracy of all metering values assumes 25°C, 50/60 Hz and less than 20% THD.

Generator Voltage

Range:	10 V to 79 kV
Accuracy:	0.5%

Generator Current

Range:	0.1 to 5,000 A (5 A CTs)
Accuracy:	0.5%

Frequency

Range:	40 to 65 Hz
Accuracy:	0.2 Hz

Field Voltage

Range:	0 to 200 Vdc
Accuracy:	5.0%

Field Current

Range:	0 to 8.0 Adc
Accuracy:	0.5%

Power (Apparent, Real and Reactive)

Range:	0 to 99 MVA, MW and MVar
Accuracy:	3.0%

Power Factor

Range:	-1.0 to –0.6, +0.6 to +1.0
Accuracy:	0.02

Phase Angle

Range:	0 to 360°
Accuracy:	2.0°

Environment

Operating Temp.:	-40°C to +70°C (-40°F to +158°F)
Storage Temp.:	-40°C to +85°C (-40°F to +185°F)

Type Tests

Shock:	20 Gs in 3 perpendicular planes
Vibration:	1 G at 5 to 26 Hz 0.036” double amplitude (27 to 52 Hz) 5 Gs at 53 to 500 Hz
Salt Fog:	Tested per MIL-STD-810E

Physical

Weight:	1.52 lb. (690 g)

SECTION 2 • HUMAN-MACHINE INTERFACE

TABLE OF CONTENTS

SECTION 2 • HUMAN-MACHINE INTERFACE 8

GENERAL 8
FRONT PANEL CONTROLS AND INDICATORS 8
INITIAL ADJUSTMENTS 9
MAKING SETTINGS CHANGES 10
Front Panel Operation 10
Setting Level Indication 11
COMMUNICATION PORT 16

Figures

Figure 2-1. DVR2000E Front Panel Indicators 8
Figure 2-2. DVR2000E Communication Port Location 16

Tables

Table 2-1. DVR2000E Front Panel Control Descriptions 8
Table 2-2. DVR2000E Front Panel Mode Status Indicator Descriptions 9
Table 2-3. DVR2000E Front Panel Adjustment Indicator Descriptions 10
Table 2-4. Coarse Voltage Adjust Setting Ranges 11
Table 2-5. Sensing Mode (Single-phase/Three-phase) Select 11
Table 2-6. Manual Mode (On/Off) Select 12
Table 2-7. Manual Mode (If – Limit) Adjustment Ranges 12
Table 2-8. On-Line Operating Mode (AVR (OFF) / VAR / PF) Select 12
Table 2-9. VAR Control Adjustment Ranges 13
Table 2-10. Power Factor Control Adjustment Ranges 13
Table 2-11. Underfrequency Adjustment Ranges 14
Table 2-12. Droop Adjustment Ranges 14
Table 2-13. Stability Range Selection Settings 15
Table 2-14. Gain Adjustment Ranges 15
Table 2-15. Fine Voltage Adjust Setting Ranges 15

SECTION 2 • HUMAN-MACHINE INTERFACE

GENERAL

The DVR2000E human-machine interface (HMI) consists of front panel controls and indicators and a rear panel communication port.

FRONT PANEL CONTROLS AND INDICATORS

Section 2

DVR2000E front panel controls and indicators consist of 12 red LEDs and three pushbuttons. Figure 2-1 illustrates the front panel controls and indicators of the DVR2000E. The LEDs indicate control mode and status conditions and are also used when adjusting settings at the front panel.

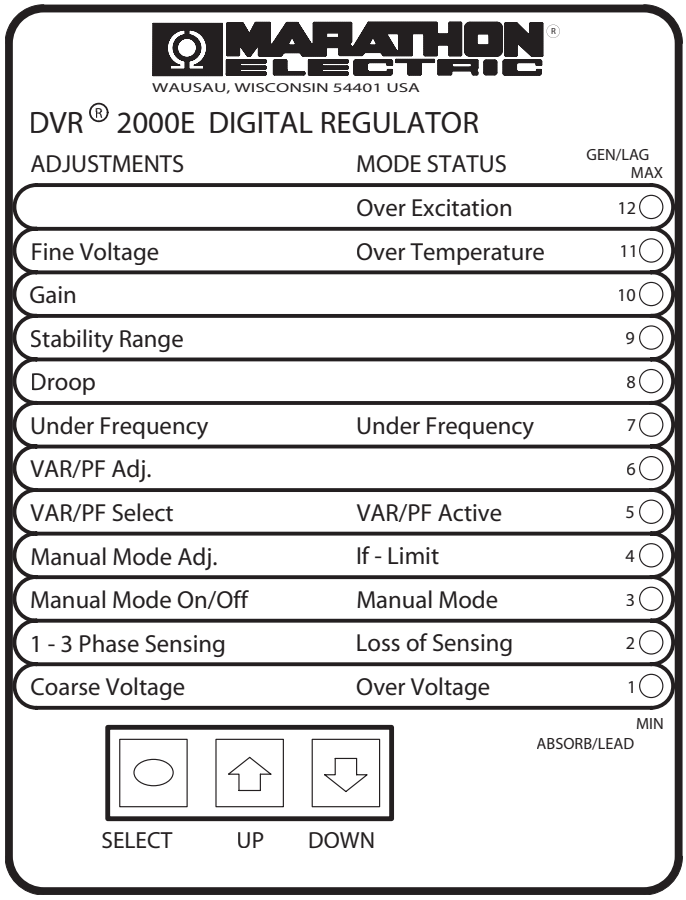

Figure 2-1. DRV2000E Front Panel Indicators

Table 2-1. DVR2000E Front Panel Control Descriptions

Control	Description
SELECT	This pushbutton selects a function for adjustment. Successive presses of the SELECT pushbutton scrolls through the list of DVR2000E functions to be adjusted.
UP	This pushbutton increases the setting level of the function being adjusted.
DOWN	This pushbutton decreases the setting level of the function being adjusted.

Table 2-2. DVR2000E Front Panel Mode Status Indicator Descriptions

Indicator	Description
Over Excitation LED #12	This LED blinks rapidly when the Overexcitation Protection feature is enabled and the field voltage exceeds the setpoint (80 V default) for 15 seconds. The DVR2000E will shut down when an overexcitation condition is detected. The Over Excitation LED blinks for 5 seconds when the DVR2000E is powered up following an overexcitation condition.
Over Temperature LED #11	This LED blinks rapidly when the internal temperature of the DVR2000E has exceeded its limit and causes the unit to shut down.
Under Frequency LED #7	This LED blinks rapidly during an under frequency condition.
Var/PF Active LED #5	This LED blinks rapidly when operating in Var or Power Factor mode.
If – Limit LED #4	This LED blinks rapidly when the field current exceeds the programmed overexcitation limit. It will continue to flash until the overexcitation condition ceases or the overexcitation time delay expires and the DVR2000E shuts down. The Overexcitation Limiting LED flashes for 5 seconds when the DVR2000E is powered up following an overexcitation limiting condition.
Manual Mode LED #3	This LED blinks rapidly when operating in Manual mode.
Loss of Sensing LED #2	This LED blinks rapidly when a loss of generator sensing voltage is detected. The DVR2000E will shut down. The Loss of (Generator) Sensing LED flashes for 5 seconds when the DVR2000E is powered up following shutdown for loss of generator sensing condition.
Over Voltage LED #1	This LED blinks rapidly when the generator output voltage exceeds the setpoint for 0.75 seconds. The DVR2000E will shut down when a generator overvoltage condition is detected. The (Generator) Overvoltage LED flashes for 5 seconds when the DVR2000E is powered up following a generator overvoltage condition.

INITIAL ADJUSTMENTS

CAUTION

Read and understand the operation of the individual adjustments before attempting any initial adjustments.

Before starting the generator, the procedures in the following paragraphs should be performed.

Remove the 5 ampere fuse before starting the generator for the first time. Perform all preliminary engine governor adjustments without the regulator energized.

After initial governor adjustments are complete, reinstall the 5 ampere fuse and connect only the power input leads or PMG leads to the regulator. Remove all other regulator connections that may be present and temporarily insulate them.

Start and run the generator at rated speed. The regulator will perform the self-test and enter a shutdown mode. At this time, initial adjustments can be made. To do this, step through each adjustment using the “SELECT” button. For each adjustment, press the “UP” or “DOWN” button to obtain the desired level on the LED bar graph.

After the initial adjustments are made, shut down the generator and connect the remaining regulator leads. The generator may be started and final adjustments may be performed on the regulator.

MAKING SETTINGS CHANGES

The following paragraphs describe how the HMI is used to make setting changes.

Front Panel Operation

The LEDs indicate control mode and status conditions and are also used when adjusting settings at the front panel. Repeatedly pressing the “SELECT” button steps through the various adjustments, starting with the “Course Voltage” adjustment and progressing through to the “Fine Voltage” adjustment. The next press of the “SELECT” button exits the adjustment mode.

When in the adjustment mode, only the adjustment LEDs will be lit. All mode status LEDs will be turned off. Adjustment LEDs are of two types. The first type is the LED that indicates the function being adjusted. This LED blinks slowly (approximately once per second). The second type is the LED that indicates the level of adjustment. This LED is on steady. The level of adjustment is changed by pressing the “UP” or “DOWN” button. When an adjustment level LED (on steady) overlaps the function LED (slow blinking), the LED will remain in the slow blinking mode. If no button is pressed for a period of one minute, the regulator saves the settings and exits the adjustment mode. If regulator power is interrupted before the automatic save feature is commanded, that level of adjustment will be lost.

When the regulator is not in the adjustment mode and either the “UP” or “DOWN” button is pressed, the regulator enters the “Fine Voltage” adjustment mode and changes the generator fine voltage set point by 0.1V. Successive presses of the “UP” or “DOWN” button shall continue to adjust the fine voltage setting. Pressing the “SELECT” button causes the regulator to exit the adjustment mode. Mode status LEDs blink approximately twice per second.

Table 2-3. DVR2000E Front Panel Adjustment Indicator Descriptions

Indicator	Description
Fine Voltage LED #11	This LED blinks slowly when the “Fine Voltage” level is selected for adjustment via the front panel push buttons.
Gain LED #10	This LED blinks slowly when the “Gain” adjustment is selected for fine tuning of loop gain via the front panel push buttons.
Stability Range LED #9	This LED blinks slowly when selecting the desired “Stability Range” via the front panel push buttons.
Droop LED #8	This LED blinks slowly when the “Droop” percentage level is selected for adjustment via the front panel push buttons.
Under Frequency LED #7	This LED blinks slowly when the “Under Frequency” knee point is selected for adjustment via the front panel push buttons.
VAR/PF Adjust LED #6	This LED blinks slowly when the level of the programmed mode (VAR or Power Factor) is selected for adjustment via the front panel push buttons (DVR2000EC only).
VAR/PF Select LED #5	This LED blinks slowly when selecting the programmed mode (VAR, Power Factor, or none(AVR)) via the front panel push buttons. When in this adjustment mode, LED #1 is on solid for none(AVR), LED #2 is on solid for Power Factor mode, and LED #3 is on solid for VAR mode (DVR2000EC only).
Manual Mode Adj. LED #4	This LED blinks slowly when the “Manual Mode” (field current) regulation set point is selected for adjustment via the front panel push buttons.
Manual Mode On/ Off LED #3	This LED blinks slowly when selecting or deselecting “Manual Mode” (field current regulation) as the active operating mode via the front panel pushbuttons. When in this adjustment mode, LED #1 is on if Manual Mode is off, LED #2 is on if Manual Mode is on.

1 - 3 Phase Sensing LED #2	This LED blinks slowly when selecting single or three phase sensing via the front panel push buttons. When in this adjustment mode, LED #1 is on if single phase sensing is selected, LED #3 is on if three phase sensing is selected.
Coarse Voltage LED #1	This LED blinks slowly when the “Coarse Voltage” level is selected for adjustment via the front panel push buttons.

Setting Level Indication

Indication of a setting level is provided by the 12 front panel LED indicators. The upper limit of a setting range is represented by the top LED which is labeled GEN/LAG and MAX. The lower limit of a setting range is represented by the bottom LED which is labeled MIN and ABSORB/LEAD. The setting range for each LED is summarized in Tables 2-4 through 2-15. LEDs in the tables are numbered from 1 to 12 with 1 being the lowermost LED (labeled MIN/ABSORB/LEAD) and 12 being the uppermost LED (labeled GEN /LAG/MAX.

Table 2-4. Coarse Voltage Adjust Setting Ranges

Coarse Voltage – LED 1 Blinking Slowly Maximum Adjustment Range Increment: 6 Vac				
	Increase		Decrease	
LED	Minimum Value	Maximum Value	Minimum Value	Maximum Value
12	563	600	558	600
11	521	557	516	552
10	479	515	474	510
9	437	473	432	468
8	395	431	390	426
7	353	389	348	384
6	311	347	306	342
5	269	305	264	300
4	227	263	222	258
3	185	221	180	216
2	143	179	138	174
1	95	137	95	132

Table 2-5. Sensing Mode (Single-phase/Three-phase) Select

Single-phase/Three-phase select – LED #2 Blinking Slowly	
LED	MODE
12	N/A
11	N/A
10	N/A
9	N/A
8	N/A
7	N/A
6	N/A
5	N/A
4	N/A
3	Three-phase
2	N/A
1	Single-phase

Table 2-6. Manual Mode (On/Off) Select

Manual Mode On/Off – LED 3 Blinking Slowly	
LED	MODE
12	N/A
11	N/A
10	N/A
9	N/A
8	N/A
7	N/A
6	N/A
5	N/A
4	N/A
3	N/A
2	ON
1	OFF

Table 2-7. Manual Mode (If – Limit) Adjustment Ranges

Manual Mode Adjust – LED 4 Blinking Slowly Adjustment Range: 0 to 3 Adc Increment: 0.01 Adc		
LED	Minimum Value	Maximum Value
12	2.75	3
11	2.50	2.74
10	2.25	2.49
9	2.00	2.24
8	1.75	1.99
7	1.50	1.74
6	1.25	1.49
5	1.00	1.24
4	0.75	0.99
3	0.50	0.74
2	0.25	0.49
1	0	0.24

Table 2-8. On-Line Operating Mode (AVR (OFF)/VAR/PF) Select *

AVR (OFF) / VAR / PF Select – LED #5 Blinking Slowly	
LED	MODE
12	N/A
11	N/A
10	N/A
9	N/A
8	N/A
7	N/A
6	N/A
5	N/A
4	N/A
3	Var
2	PF
1	AVR

* Var/PF control is available only on DVR2000EC.

Table 2-9. VAR Control Adjustment Ranges *

VAR Control Adjust – LED 6 Blinking Slowly Maximum Adjustment Range: –100% (absorb) to +100% (generate) Increment: 1.0%		
LED	Minimum Value †	Maximum Value †
12	84	100
11	67	83
10	51	66
9	34	50
8	17	33
7	1	16
6	-16	0
5	-33	-17
4	-49	-34
3	-66	-50
2	-83	-67
1	-100	-84

* Var/PF control is available only on DVR2000EC.

† Minimum and maximum values may differ from the Table 2-9 values if the value has been changed in DVR2000E-32 software. DVR2000E-32 software has 0.5 percent resolution compared to the 1.0 percent resolution of the HMI.

Table 2-10. Power Factor Control Adjustment Ranges *

Power Factor Control Adjust – LED 6 Blinking Slowly Maximum Adjustment Range: +0.6 (lag) to –0.6 (lead) Increment: 0.01		
LED	Minimum Value †	Maximum Value †
12	0.66	0.60
11	0.73	0.67
10	0.80	0.74
9	0.86	0.81
8	0.93	0.87
7	1.0	0.94
6	-0.94	-0.99
5	-0.87	-0.93
4	-0.80	-0.86
3	-0.74	-0.79
2	-0.67	-0.73
1	-0.60	-0.66

* Var/PF control is available only on DVR2000EC.

† Minimum and maximum values may differ from the Table 2-10 values if the value has been changed in DVR2000E-32 software. DVR2000E-32 software has 0.001 resolution compared to the 0.01 resolution of the HMI.

Table 2-11. Underfrequency Adjustment Ranges

Underfrequency Adjust – LED 7 Blinking Slowly Maximum Adjustment Range: 40 to 65 Hz Increment: 0.1 Hz		
LED	Minimum Value	Maximum Value
12	63.0	65.0
11	60.9	62.9
10	58.8	60.8
9	56.7	58.7
8	54.6	56.6
7	52.5	54.5
6	50.5	52.4
5	48.4	50.4
4	46.3	48.3
3	44.2	46.2
2	42.1	44.1
1	40.0	42.0

Table 2-12. Droop Adjustment Ranges

Droop Adjust – LED 8 Blinking Slowly Adjustment Range: 0 to 10% Increment: 0.25%		
LED	Minimum Value *	Maximum Value *
12	9.25	10.00
11	8.5	9.00
10	7.75	8.25
9	6.75	7.50
8	6.00	6.50
7	5.25	5.75
6	4.25	5.00
5	3.5	4.00
4	2.75	3.25
3	1.75	2.5
2	1	1.5
1	0	0.75

* Minimum and maximum values may differ from the Table 2-12 values if the value has been changed in DVR2000E-32 software. DVR2000E-32 software has 0.01% resolution compared to the 0.25 percent resolution of the HMI.

Table 2-13. Stability Range Selection Settings

Stability Range Select – LED 9 Blinking Slowly Adjustment Range per LED: 1		
Frame/Poles	LED	Range Selected
	12	N/A
	11	N/A
	10	N/A
	9	N/A
Programmable	8	21
1,000/6	7	7
740/6	6	6
1,000/4	5	5
740/4	4	4
570/4	3	3
430/4	2	2
360/4	1	1

Table 2-14. Gain Adjustment Ranges

Gain Adjust – LED 10 Blinking Slowly Maximum Adjustment Range: 0.5 to 4.5 kg for AVR and 0 to 100 kg for FCR				
When the unit is operating in AVR, PF, and var modes, gain adjustments are made to AVR kg. When in FCR mode, gain adjustments are made to FCR kg. Front Panel increments: AVR kg = 0.01 FCR kg = 0.1				
	Minimum Value *		Maximum Value *	
LED	AVR	FCR	AVR	FCR †
12	4.17	11.1	4.50	12
11	3.84	10.1	4.16	11
10	3.50	9.1	3.83	10
9	3.17	8.1	3.49	9
8	2.84	7.1	3.16	8
7	2.50	6.1	2.83	7
6	2.17	5.1	2.49	6
5	1.84	4.1	2.16	5
4	1.50	3.1	1.83	4
3	1.17	2.1	1.49	3
2	0.85	1.1	1.16	2
1	0.5	0	0.84	1

* Minimum and maximum values may differ from the Table 2-14 values if the gain value has been changed in DVR2000E-32 software.

† DVR2000E-32 software allows a maximum FCR kg setting of 1,000 kg. A kg setting of 12 or more entered in DVR2000E-32 software will be reduced to 12 with the first push of the HMI "DOWN" pushbutton when adjusting FCR kg via the front panel.

Table 2-15. Fine Voltage Adjust Setting Ranges

Fine Voltage Adjust – LED #11 Blinking Slowly Maximum Adjustment Range: -15% to +15% Increment: 0.1V
The adjustment range for Fine Voltage Adjust is based on the fine voltage adjustment band setting. The default adjustment range is –10% to +10%. See Section 5, DVR2000E-32 Software for Windows® OS, Setting Definitions, Setting Adjustments for information about the Fine Voltage Adjustment Band Setting.

COMMUNICATION PORT

A communication port is located on the rear panel and consists of a female RS-232 (DB-9) connector. The communication port serves as an interface for programming (setup) of the DVR2000E. Figure 2-2 illustrates the location of the communication port.

Programming requires a standard 9-pin serial communication cable connected between the DVR2000E and an IBM-compatible PC or handheld computer operating with DVR2000E-32 software. DVR2000E-32 is a Windows® 98/NT based communication software package that is supplied with the DVR2000E. A detailed description of DVR2000E-32 software is provided in Section 5, DVR2000E-32 Software.

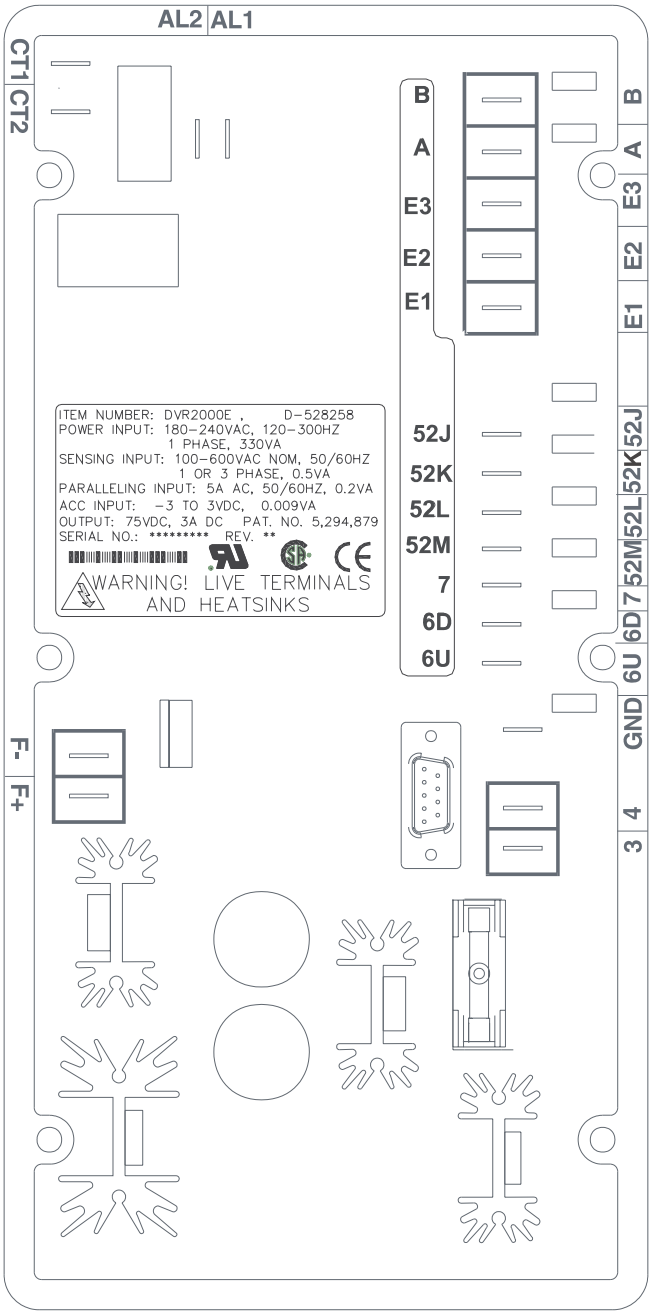

Figure 2-2. DVR2000E Communication Port Location

SECTION 3 • FUNCTIONAL DESCRIPTION

TABLE OF CONTENTS

SECTION 3 • FUNCTIONAL DESCRIPTION 18
- INTRODUCTION 18
- DVR2000E FUNCTION BLOCKS 18
  - Analog Inputs 18
- Generator Voltage 19
- Phase B Line Current 19
- Field Voltage (VFIELD) 19
- Field Current (IFIELD) 19
- Analog (Auxiliary) Input 19
  - Contact Input Circuits 19
- Raise 20
- Lower 20
- Var/Power Factor Control (52J/K) Option 20
- Parallel Generator Compensation (52L/M) 20
  - Communication Port 20
  - Microprocessor 20
  - Power Input Stage 20
  - Power Supply 20
  - Power Amplifier Stage 20
  - Front Panel Indicators 20
  - Front Panel Switches 21
  - Relay Output 21
- DVR2000E OPERATING FEATURES 21
  - Operating Modes 21
- Automatic Voltage Regulation Mode 21
- Manual Mode 21
- Var Control Mode (Optional) 21
- Power Factor Control Mode (Optional) 21
  - Reactive Droop Compensation 22
  - Underfrequency 22
- Generator Underfrequency 22
- Engine Unloading 22
  - Protection 22
- Overexcitation Shutdown (Field Voltage) 23
- Generator Overvoltage Shutdown 23
- DVR Overtemperature Shutdown 23
- Loss of Generator Sensing Shutdown 23
- Overexcitation Limiting (Field Current) 23
- Crowbar Shutdown 24
  - Generator Soft Start 24

Figures

Figure 3-1. Simplified Block Diagram 18

Section 3

SECTION 3 • FUNCTIONAL DESCRIPTION

INTRODUCTION

This section describes how the DVR2000E functions and explains its operating features. To ease understanding, DVR2000E functions are illustrated in the block diagram of Figure 3-1. A detailed description of each function block is provided in the paragraphs under the heading of DVR2000E Function Blocks.

DVR2000E operating features include four operating modes, four protective functions, startup provisions, reactive droop compensation, underfrequency compensation, and an auxiliary analog input. A detailed description of each operating feature is provided in the paragraphs under the heading of DVR2000E Operating Features.

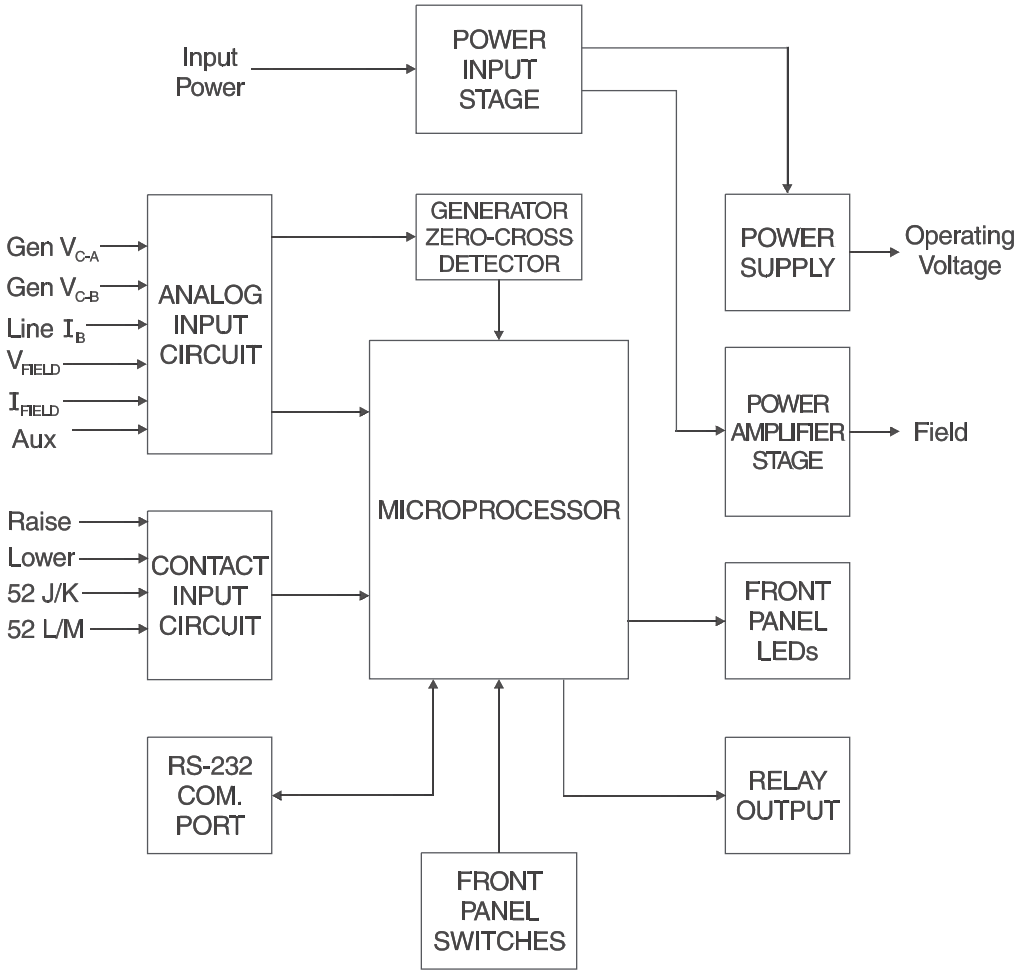

Figure 3-1. Simplified Block Diagram

DVR2000E FUNCTION BLOCKS

The following paragraphs describe each of the function blocks illustrated in Figure 3-1. The function of each block is explained along with the operation of all function block inputs and outputs.

Analog Inputs

Six analog voltage and current inputs may be sensed and brought to the DVR2000E input.

Generator Voltage

Generator voltage is monitored at terminals E1 (A-phase), E2 (B-phase), and E3 (C-phase). Nominal voltages of up to 600Vac may be sensed at these terminals. Voltage applied to these inputs is scaled and conditioned before being applied to the input of the ADC. The voltage signal from phase C and A (V_{C-A}) of the generator is used by the ADC to calculate the rms value of generator voltage across phases C and A. Likewise, the voltage signal from phase C and B (V_{C-B}) of the generator is used by the ADC to calculate the rms value of generator voltage across phases C and B. The rms value of generator phase B to phase A voltage (V_{B-A}) is calculated by the microprocessor from the phase C to phase A signal (V_{C-A})and the phase C to phase B (V_{C-B}) signal.

Additionally, the generator phase C to phase A (V_{C-A}) signal is applied to a filtered zero cross detector circuit. This signal is applied to the microprocessor and is used to calculate generator frequency.

Phase B Line Current

The phase B line current (I_B) signal is developed through a customer supplied current transformer (CT) and monitored through terminals CT1 and CT2. Current up to 5 amperes rms may be monitored at these terminals. The current monitored at these terminals is scaled and conditioned by an internal current transformer and active circuitry for use by the ADC. The signal applied to the ADC is used to calculate the rms value of phase B line current.

Additionally, the phase angle between phase B line current and phase C to phase A generator voltage is calculated for use during Droop and Var/Power Factor operation.

CAUTION

The DVR2000E CT connections are reversed from the DVR2000.

Field Voltage (V_{FIELD})

Voltage across the regulator field output terminals, F+ and F-, is monitored, scaled, and conditioned before being applied to the ADC. This signal is used to calculate the dc value of field voltage for use in system protection.

Field Current (I_{FIELD})

Current through the main power output switch is converted to a proportional voltage level. This voltage signal is scaled and conditioned before being applied to the input of the ADC. The result is used to calculate the dc value of field current for use in the Manual mode of operation as well as protection of the system.

Analog (Auxiliary) Input

CAUTION

If the DC voltage is removed from the Analog (Auxiliary) Input, the operating setpoint will return to the original value.

This input allows adjustment of the DVR-2000E regulation setpoint by the application of a positive or negative dc voltage across terminals A and B. Voltage up to +3 Vdc may be applied at this input. The circuit induces a 1,000-ohm burden on the dc source. The application of a +3 Vdc signal corresponds to a +30 percent change in setpoint.

Contact Input Circuits

Four contact input circuits powered from an internal 13 Vdc supply provide input control from user-supplied contacts.

Raise

Closing a contact across terminals 6U and 7 causes the active operating setpoint to increase. This function is active as long as the contact is closed.

Lower

Closing a contact across terminals 6D and 7 causes the active operating setpoint to decrease. This function is active as long as the contact is closed.

Var/Power Factor Control (52J/K) Option

Closing a contact across terminals 52J and 52K disables var/power factor control. An open contact enables the DVR2000E(C) to control the generator reactive power in either the var or the power factor mode. The contact has no effect when this option is not present. For more information, refer to the Parallel Generator Compensation (52L/M) contact input.

Parallel Generator Compensation (52L/M)

Closing a contact across terminals 52L and 52M disables parallel operation. An open contact enables parallel operation and the DVR2000E operates in reactive droop compensation mode.

If the Var/Power Factor Control option is present, the 52J/K input has priority. Therefore, if the 52J/K and the 52L/M inputs are both open, the system operates in var/power factor mode.

Communication Port

The communication port provides the interface for user programming (setup) of the DVR2000E. Connection is made to the female RS-232 (DB-9) connector with a user-supplied, standard 9-pin cable. The communication port is optically isolated and is powered from a transformer-isolated supply.

Microprocessor

The microprocessor is the heart of the DVR2000E and performs measurement, computation, control, and communication functions by the use of its embedded programming and the nonvolatile settings stored in its memory.

Power Input Stage

Input power is applied to terminals 3 and 4 from the PMG. It is rectified and filtered before being applied to the power amplifier and the power supply. Input power is single-phase in the range of 180 to 240 Vac at a frequency of 200 to 360 hertz.

Power Supply

The internal switch-mode power supply receives power from the power input stage and supplies power at the required dc voltage levels to the internal circuitry of the DVR2000E.

Power Amplifier Stage

The power amplifier receives power from the power input stage and supplies a controlled amount of power to the exciter field via terminals F+ and F-. The amount of power supplied to the exciter field is based on gating pulses received from the microprocessor. The power amplifier uses a solid state power switch to provide the required power to the exciter field. Power amplifier output to the field is rated up to 75 Vdc at 3 Adc continuous and 150 Vdc at 7.5 Adc for 10 seconds.

Front Panel Indicators

Twelve front panel LED indicators light to indicate various operating modes, protective functions, and adjustments. Section 2, Human-Machine Interface provides more information about the front panel indicators.

Front Panel Switches

Changes to settings can be made at the front panel using the three pushbutton switches. These push-buttons are labeled Select, Up, and Down. Section 2, Human-Machine Interface provides more in-formation about the front panel switches.

Relay Output

A common alarm output contact is provided through terminals AL1 and AL2. This normally open, form A contact annunciates alarm or generator trip conditions and closes in the event of a protective shutdown or transfer. The relay output is non-latching.

DVR2000E OPERATING FEATURES

The following paragraphs describe the characteristics of each DVR2000E operating feature.

Operating Modes

The DVR2000E provides up to four modes of operation selectable through Windows® or Palm OS® communication software. Automatic voltage regulation mode and Manual mode are standard features. Var and Power Factor modes are an option.

Automatic Voltage Regulation Mode

In Automatic Voltage Regulation (AVR) mode, the DVR2000E regulates rms generator output voltage. This is accomplished by sensing generator output voltage and adjusting dc output excitation current to maintain voltage at the regulation setpoint. The regulation setpoint is adjusted by the Raise and Lower contact inputs, front panel switches, or through Windows® or Palm OS® communication software. The regulation point may also be modified by the Droop function or the Underfrequency function under certain conditions.

Manual Mode

In Manual mode, also known as Field Current Regulation (FCR) mode, the DVR2000E maintains dc excitation current at a set level. The current-level setpoint is adjustable from 0 to 3 Adc by the Raise and Lower contact inputs, front panel switches, or through Windows® or Palm OS® communication software.

WARNING!

The Manual mode excitation level must be evaluated prior to enabling this feature. If the level of excitation current is inappropriate for the generator, severe damage to the generator may occur.

For initial startup, if the regulator is in Manual mode and set at 0.25 amperes, the generator should come up to approximately half-voltage. This allows wiring and sensing leads to be checked before the regulator is switched to AVR mode. Increasing the field current to 0.5 amperes will bring the generator up to approximately rated, no-load voltage.

Var Control Mode (Optional)

In Var Control mode, the DVR2000E(C) maintains generator vars (volt-amperes, reactive) at a set level when paralleling with an infinite bus. The DVR2000E(C) calculates generator vars using the sensed generator output voltage and current quantities and then adjusts the dc excitation current to maintain vars at the setpoint. Var control is enabled and disabled through the front panel switches, Windows® or Palm OS® communication software. When the software is turned on, var control is enabled or disabled through the Var/Power Factor Control (52J/K) contact input circuit. The var setpoint is adjustable from 100 percent absorb to 100 percent generate through the Raise and Lower contact inputs, front panel switches, or through Windows® or Palm OS® software.

Power Factor Control Mode (Optional)

In Power Factor Control mode, the DVR2000E(C) maintains generator power factor at a set level when paralleling

with an infinite bus. The DVR2000E(C) calculates generator power factor using the sensed generator output voltage and current quantities and then adjusts the dc excitation current to maintain power factor at the setpoint. Power factor control is enabled or disabled through the front panel switches, Windows® or Palm OS® software. When the software is turned on, it is enabled or disabled through the Var/Power Factor Control (52J/K) contact input circuit. The power factor setpoint is adjustable between 0.6 lag and 0.6 lead through the Raise and Lower contact inputs, front panel switches, or through Windows® or Palm OS® communication software.

Reactive Droop Compensation

The DVR2000E provides a reactive droop compensation feature to assist in the sharing of reactive load during parallel generator operation. When this feature is enabled, the DVR2000E calculates the reactive portion of the generator load using the sensed generator output voltage and current quantities and then modifies the voltage regulation setpoint accordingly. A unity power factor generator load results in almost no change in generator output voltage. A lagging power factor generator load (inductive) results in a reduction of generator output voltage. A leading power factor generator load (capacitive) results in an increase of generator output voltage. Droop is adjustable up to 10 percent with rated, nominal B-phase line current (5 amperes applied through terminals CT1 and CT2) and 0.8 power factor. The droop feature is enabled and disabled through the Parallel Generator Compensation contact input circuit (terminals 52L and 52M). If the Var/Power Factor option is present, the 52J/K input must also be closed to disable droop.

Underfrequency

Generator Underfrequency

When generator frequency drops below the selected knee frequency setpoint, the voltage setpoint is automatically adjusted by the DVR2000E so that generator voltage follows the selected PU (per unit) V/Hz curve. When operating on the selected PU V/Hz curve, the Underfrequency Active indicator flashes on the front panel and in DVR2000E-32. The knee frequency is adjustable from 40 to 65 hertz and the PU V/Hz curve may be set to a slope from 1 to 3 in increments of 0.01 through the Windows® or Palm OS® communication software. The default is 59 Hz and a slope of 1.

Engine Unloading

The Engine Unloading feature modifies the underfrequency curve. This feature becomes active when the generator frequency decreases a programmable amount (Unloading Activation – Frequency) below the knee frequency setpoint, and when the speed change rate is greater than the Unloading Activation - Rate. The amount of droop while Engine Unloading is active is adjusted by the Unloading Droop - Percentage (%) setting. The amount of time Engine Unloading is active is set by Unloading Droop - Time (sec.).

Engine unloading adjustments are made through the Windows and Palm OS communication software.

Unloading Activation – Frequency (Hz) is entered as a value below the underfrequency corner where the engine unloading feature may be activated. A frequency value of 0.9 to 9.0 hertz can be entered in 0.1 hertz increments. The default value is 0.9 hertz.

Unloading Activation – Rate (Hz/25 msec) of 0 to 25.5 hertz per 25 milliseconds can be entered in 0.1 hertz per 25 millisecond increments. The engine unloading feature is activated when the frequency rate of change exceeds the setting of this field. The default value is 0.1.

Unloading Droop – Percentage (%) field defines the percent drop in generator output voltage for each 1.5 percent decrease in generator frequency when operating in the Engine Unloading mode. The Unloading Droop Percentage is adjustable from 1 to 20 percent in 1 percent steps. The default value is 10 percent.

Unloading Droop – Time (sec) value defines the length of time that the Engine Unloading mode may be active before control is passed to the normal Underfrequency mode of operation. Droop time is adjustable from 1 to 5 seconds in 1 second increments. The default value is 1 second.

Protection

The DVR2000E has the six protective functions listed below:

- Overexcitation shutdown
- Generator overvoltage shutdown
- DVR overtemperature shutdown
- Loss of generator sensing shutdown
- Overexcitation limiting
- Crowbar shutdown

Each function, except Crowbar Shutdown, has a corresponding front panel indicator that lights when the function is active. An active function (except Crowbar Shutdown) is also annunciated through the Windows® or Palm OS® communication software.

Overexcitation Shutdown (Field Voltage)

This function is enabled or disabled through DVR2000E-32 software. When enabled, if field voltage exceeds the setpoint (80 Vdc default), the Overexcitation Shutdown indicator flashes on the front panel and in the Windows® or Palm OS® communication software, the relay output closes after 15 seconds and the DVR2000E shuts down. When the DVR2000E is powered up following an over-excitation shutdown, the Overexcitation Shutdown indicator will flash for 5 seconds.

Generator Overvoltage Shutdown

The DVR2000E monitors the sensed generator output voltage. If it exceeds the overvoltage setpoint (a percent of nominal) for 0.75 seconds, the Generator Overvoltage indicator flashes on the front panel LED and in the Windows® and Palm OS® communication software, the relay output closes and the DVR2000E shuts down. When the DVR2000E is powered up following a generator overvoltage shutdown, the Generator Overvoltage indicator will flash for 5 seconds. The default setpoint is 120 percent of nominal.

DVR Overtemperature Shutdown

A temperature sensor within the DVR2000E continually monitors the temperature of the device. If the temperature exceeds 70°C (158°F), the DVR Overtemperature indicator flashes on the front panel and in the Windows® and Palm OS® communication software, the relay output closes and the DVR2000E shuts down.

Loss of Generator Sensing Shutdown

The DVR2000E monitors the sensed generator output voltage and takes protective action if a loss of sensing voltage is detected. For single-phase sensing, a sensed voltage of less than 50 percent of nominal is interpreted as a loss of sensing. For three-phase sensing, the total loss of a sensed phase or an imbalance between phases of more than 20 percent nominal is interpreted as a loss of sensing. When sensing input continuity is not lost, an adjustable time delay of 0 to 25 seconds is present when a loss of sensing condition is detected. If sensing input continuity is lost, the time delay is disabled.

If a loss of sensing occurs, the Loss of Generator Sensing indicator flashes on the front panel and in the Windows® and Palm OS® communication software, the relay output closes, and the DVR2000E shuts down. When the DVR2000E is powered up following a loss of generator sensing shutdown, the Loss of Sensing indication will flash for 5 seconds.

This function is disabled when a generator short circuit condition is detected or when sensed frequency drops below 12Hz. A generator short-circuit is determined when the phase B CT current exceeds 3PU (>15 Aac sensing current). Loss of sensing is not active during soft start time.

Overexcitation Limiting (Field Current)

The DVR2000E has a field current limit that is factory preset at 6.5 amperes. The limit is adjustable from 0 to 7.5 amperes with an adjustable time delay that has a range of 0 to 10 seconds. Both settings are made through the Windows® and Palm OS® communication software. When the overexcitation limit is exceeded, the Overexcitation Limiting indicator flashes on the front panel and in the Windows® and Palm OS® communication software. When the adjustable time delay expires, the relay output closes and the DVR2000E shuts down. When the DVR2000E is powered up following overexcitation limiting, the Overexcitation Limiting indicator will flash for 5 seconds.

Crowbar Shutdown

The Crowbar Shutdown Circuit protects the generator rotor from overcurrent damage resulting from a shorted DVR2000E power switch. During operation, if the field voltage exceeds the setpoint and the power stage receives no gating pulses for 1.5 seconds, the Crowbar Circuit activates and places a short-circuit across the DVR2000E input power terminals. This protects the generator by blowing the input power fuse and removing operating power from the device.

Generator Soft Start

The DVR2000E incorporates an adjustable soft start feature that controls the time for generator voltage to ramp to the regulation setpoint. The ramp rate is adjustable from 1 to 120 seconds in 1 second increments through the Windows® and Palm OS® communication software. The underfrequency feature is also active during soft start and takes priority in control of the generator voltage. The default setting is 7 seconds.

SECTION 4 • INSTALLATION

TABLE OF CONTENTS

SECTION 4 • INSTALLATION 26

GENERAL 26
MOUNTING 26
CONNECTIONS 29
DVR2000E Terminations 29
Generator Voltage Sensing Inputs 30
Phase B Line Current Sensing Input 30
Raise and Lower Contact Inputs 30
Var/Power Factor Control Contact Input 30
Parallel Generator Compensation 30
Analog (Auxiliary) Adjust 30
Power Supply Inputs 30
Chassis Ground 31
Power (Field) Output 31
Relay Output 31
Communication Port 31
DVR2000E Connections for Typical Applications 32
PRELIMINARY SETUP 37
ADJUSTMENTS 37

Figures

Figure 4-1. DVR2000E Dimensions 27
Figure 4-2. Cutout and Drilling Dimensions 28
Figure 4-3. DVR2000E Rear Panel Terminals 29
Figure 4-4. Communication Port Pin Assignments 31
Figure 4-5. Personal Computer to DVR2000E Connections 32
Figure 4-6. Typical Connections with ABC Rotation and Three-Phase Sensing 33
Figure 4-7. Typical Connections with ABC Rotation and Single-Phase Sensing 34
Figure 4-8. Typical Connections to a Single-Phase Generator 35
Figure 4-9. Cross-Current (Reactive Differential) Connections for Two Generators 36
Figure 4-10. Cross-Current (Reactive Differential) Connections for Three or More Generators 36

Tables

Table 4-1. Generator Voltage Sensing Terminals 30
Table 4-2. Communication Port Pin Functions 31

SECTION 4 • INSTALLATION

GENERAL

The DVR2000E is delivered in a sturdy carton to prevent shipping damage. Upon receipt, check the part number against the requisition and packaging list for agreement. Inspect for damage, and if there is evidence of such, immediately file a claim with the carrier and notify your sales representative or a sales representative at Katolight.

If the unit is not installed immediately, store it in the original shipping package in a moisture and dust free environment.

MOUNTING

The DVR2000E is normally located in the generator conduit box. It is designed for behind the panel mounting and requires a cutout for front panel viewing and access. Mounting hardware consists of six customer supplied, #12 thread-forming screws that pass through mounting holes in the conduit box and thread into the plastic shell of the DVR2000E. The unit must be mounted where the ambient temperature does not exceed the allowable environmental conditions called out in Section 1, General Information, Specifications. DVR2000E package dimensions are shown in Figure 4-1. Cutout and drilling dimensions are shown in Figure 4-2.

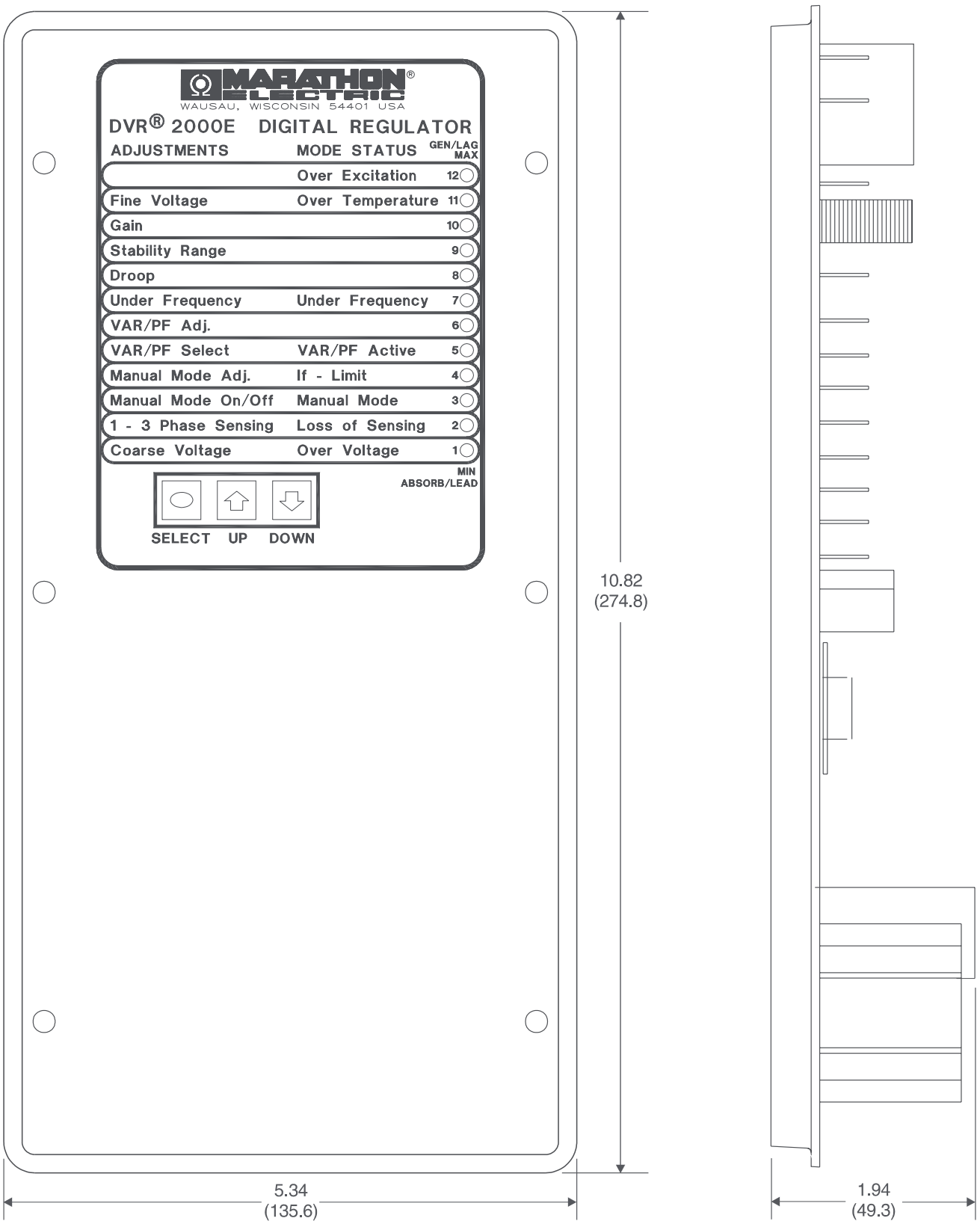

Figure 4-1. DVR2000E Dimensions

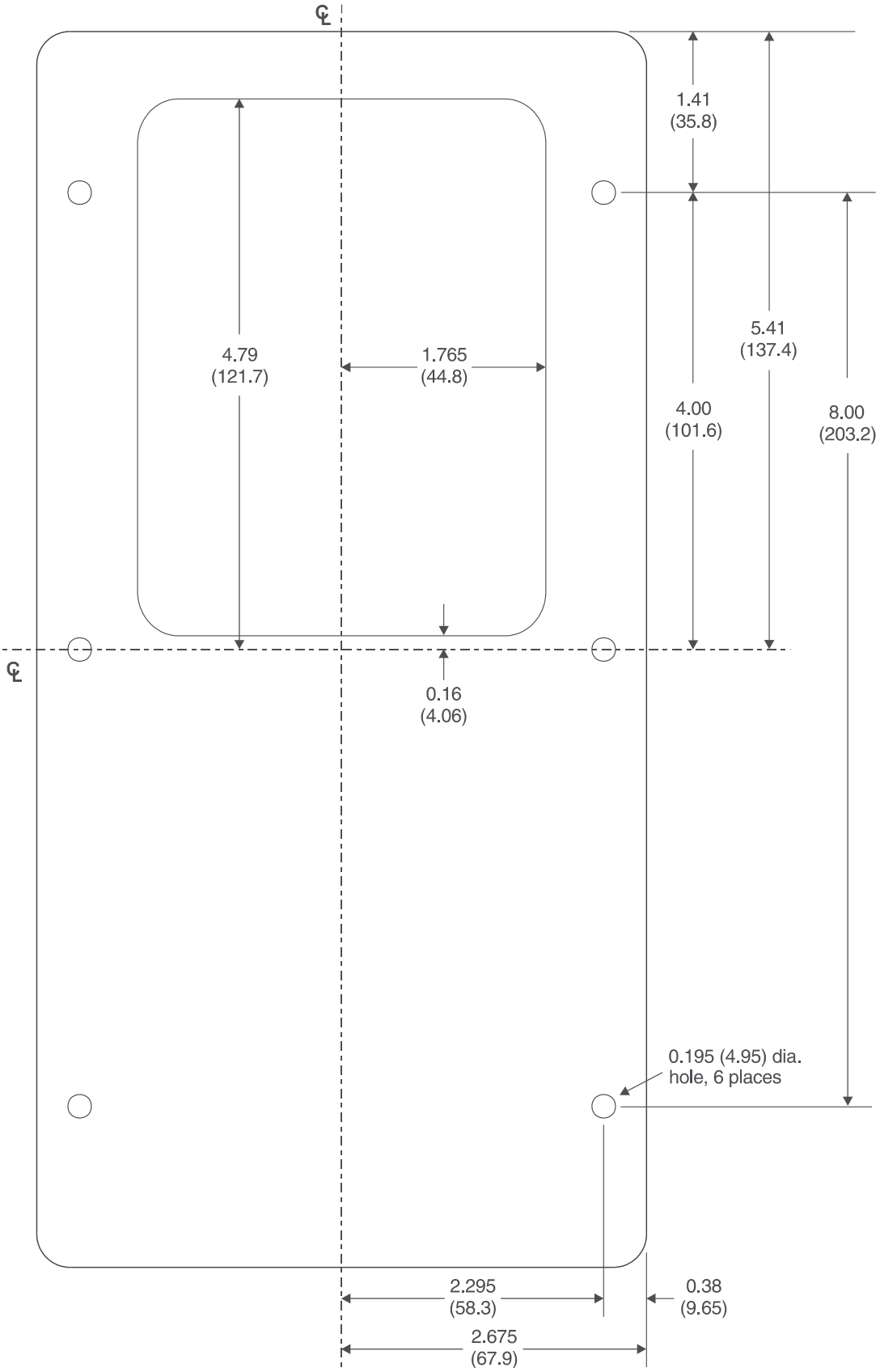

Figure 4-2. Cutout and Drilling Dimensions

CONNECTIONS

DVR2000E connections are dependent on the application. Incorrect wiring may damage the unit.

> NOTE
>
> Be sure that the DVR2000E is hard-wired to earth ground with no smaller than 12 AWG copper wire attached to the ground terminal on the rear of the unit case. When the unit is configured in a system with other devices, it is recommended to use a separate lead to the ground bus from each device.

DVR2000E Terminations

DVR2000E units have two types of interface terminals (Figure 4-3). One type is quarter-inch, quick-connect terminals and the other is a 9-pin DB9 connector. All terminals are located on the rear of the unit. The quarter-inch, quick-connect terminal labels are located on the rear of the case. Wires performing common functions, such as voltage sensing leads, should be grouped together. The 9-pin DB-9 type connector is used for temporary interface with both IBM compatible PCs and hand-held computers.

Figure 4-3 shows the terminal connections located on the rear panel of the DVR2000E. Except as noted above, connections should be made with minimum wire size of 14 AWG.

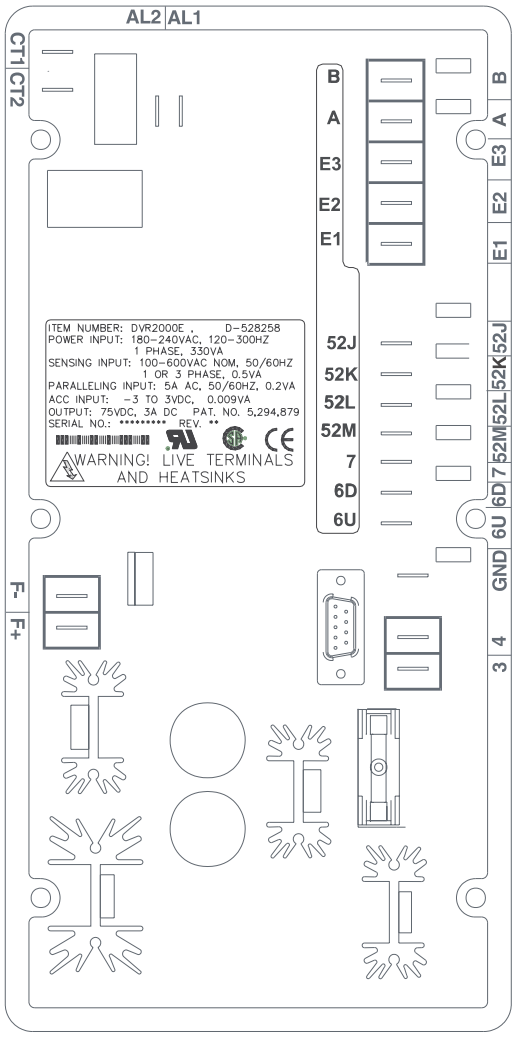

Figure 4-3. DVR2000E Rear Panel Terminals

Generator Voltage Sensing Inputs

The generator voltage sensing terminals are labeled E1, E2, and E3. A single-phase sensing connection is obtained by connecting the C-phase sensing input to terminals E2 and E3. Table 4-2 lists the terminal assignments for three-phase and single-phase generator voltage sensing.

Table 4-1. Generator Voltage Sensing Terminals

Sensing	GeneratorPhase	Terminal
3-Phase	A	E1
	B	E2
	C	E3
1-Phase	A	E1
	C	E2, E3

Phase B Line Current Sensing Input

Generator line current is stepped down through a user-supplied current transformer (CT). Secondary current from that transformer is applied to terminals labeled CT1 and CT2.

Raise and Lower Contact Inputs

Remote setpoint adjustment may be accomplished by connecting a single-pole, double-throw (SPDT), spring return, center-off switch to the terminals labeled 6U, 7, and 6D. To connect this switch, the center pole, or common terminal, must be connected to terminal 7. The other two terminals are connected to terminals 6U and 6D. This remote adjust switch may be mounted up to 150 feet away from the DVR2000E when using twisted, shielded cable.

Var/Power Factor Control Contact Input

A customer supplied enable/disable contact for this function connects to the terminals labeled 52J and 52K. This function is disabled by a closed contact.

Parallel Generator Compensation

A customer supplied enable/disable contact for this function connects to the terminals labeled 52L and 52M. This function is disabled by a closed contact.

Analog (Auxiliary) Adjust

CAUTION
If the DC voltage is removed from the Analog (Auxiliary) Input,
the operating setpoint will return to the original value.

This input allows adjustment of the DVR2000E regulation setpoint by the application of a positive or negative DC voltage across terminals A and B. Voltage up to +3 Vdc may be applied at this input. The circuit induces a 1,000-ohm burden on the dc source. The application of a +3 Vdc signal corresponds to a +30 percent change in setpoint.

Power Supply Inputs

Power input terminals are labeled 3, and 4.

Chassis Ground

The chassis ground terminal is labeled GND.

Power (Field) Output

The field output terminals for connection to the generator exciter field are labeled F+ and F-.

Relay Output

The common alarm relay output contact may be accessed at the terminals labeled AL1 and AL2. The relay output is normally open.

Communication Port

The RS-232 port on the rear panel uses a DB-9 female connector. Figure 4-4 Illustrates the pin assignments of the communication port and Table 4-3 identifies the RS-232 connector pin functions. A standard communication cable terminated with a DB-9 male connector is used for PC or hand-held computer interface with the DVR2000E as shown in Figure 4-5.

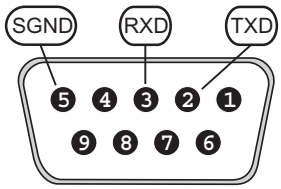

Figure 4-4. Communication Port Pin Assignments

Table 4-2. Communication Port Pin Functions

Pin	Function	Name	Direction
1	N/C	----	N/A
2	Transmit Data	TXD	From DVR2000E
3	Receive Data	RXD	To DVR2000E
4	N/C	----	N/A
5	Signal Ground	GND	N/A
6	N/C	----	N/A
7	N/C	----	N/A
8	N/C	----	N/A
9	N/C	----	N/A

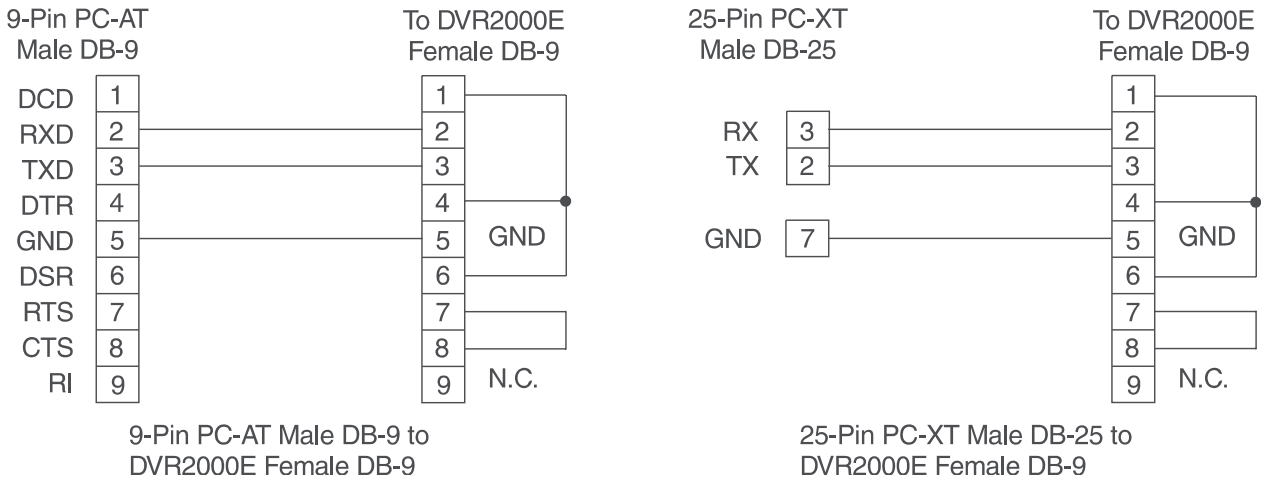

Figure 4-5. Personal Computer to DVR2000E Connections

DVR2000E Connections for Typical Applications

Figures 4-6 through 4-9 illustrate typical applications using the DVR2000E. Figure 4-6 shows an application where the DVR2000E is connected for three-phase voltage sensing. Figure 4-7 shows an application with single-phase voltage sensing while Figure 4-8 illustrates an application with a single-phase generator.

Figure 4-9 illustrates the connection of two DVR2000E devices used in a Cross-Current (Reactive Differential) application. Note that the .1 ohm resistor shown may have to vary. When operating in parallel reactive differential mode (cross current), attention must be paid to the use of the burden resistor shown in Figure 4-9. The burden resistor should have a value approximately 10 times the cross current loop resistance for proper differential operation. The value of 0.1 ohm is a suggested value. The volt-ampere (VA) capacity of the paralleling current transformers should be considered after sizing the burden resistor.

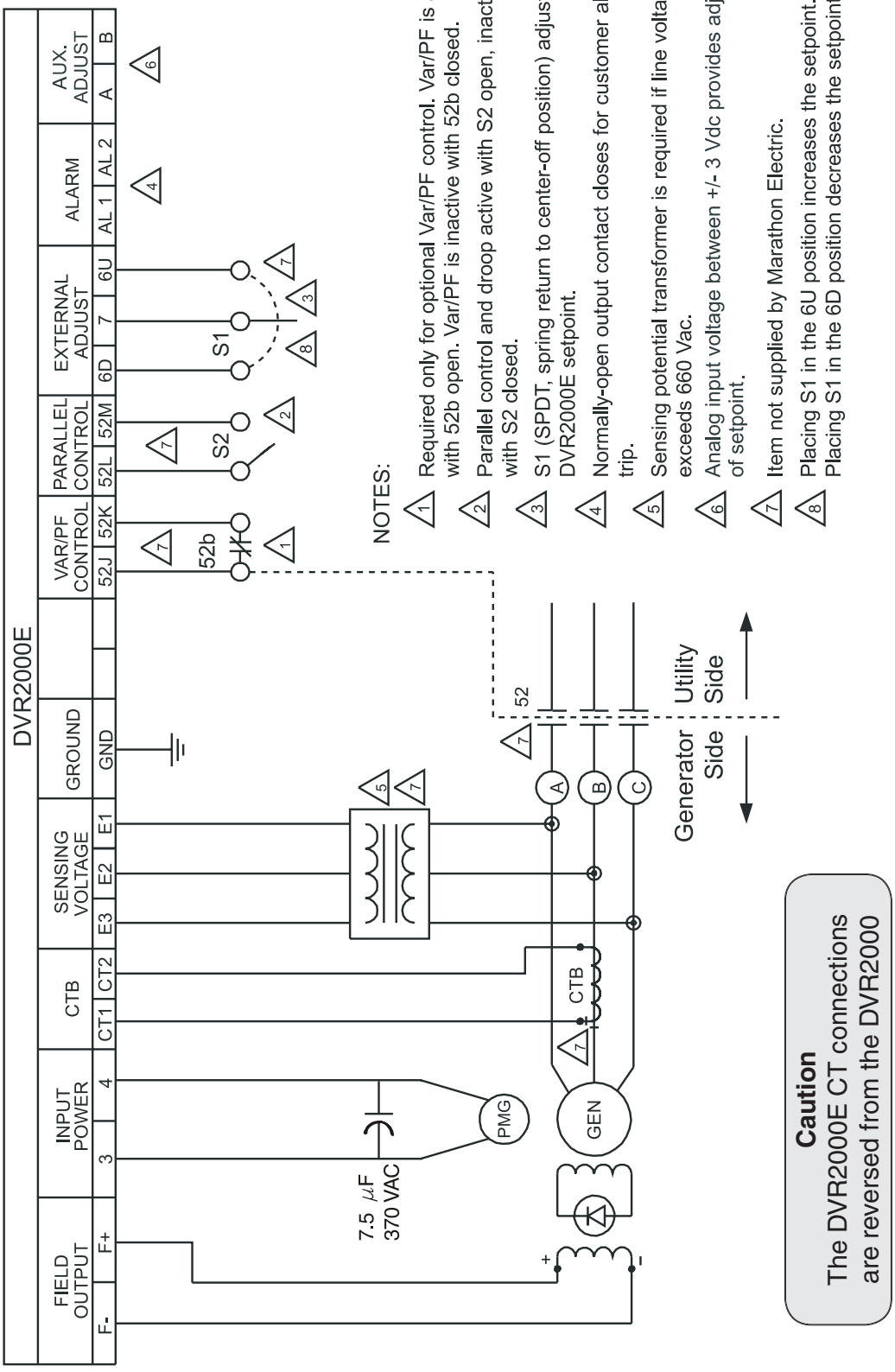

Figure 4-6. Typical Connections with ABC Rotation and Three-Phase Sensing

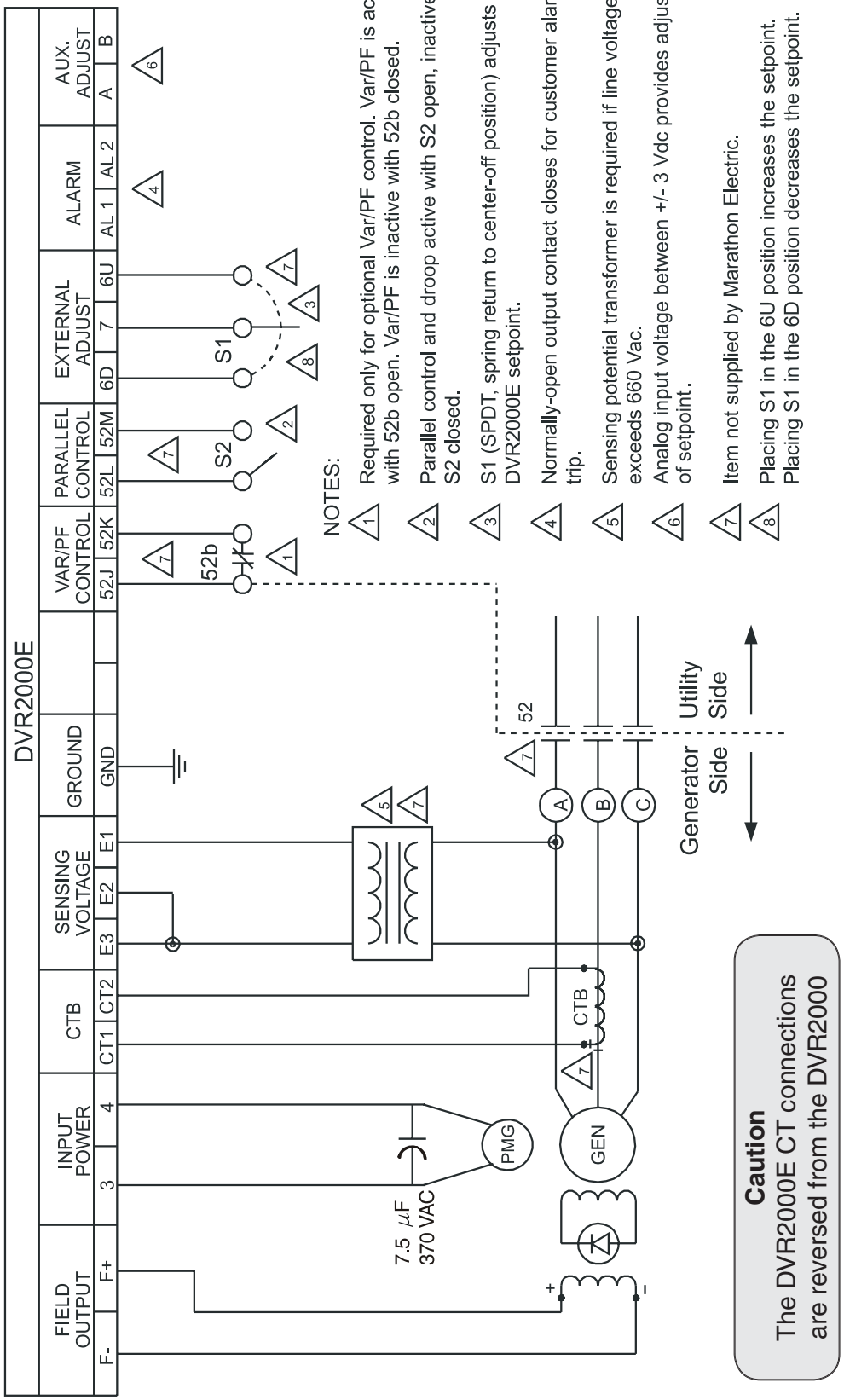

Figure 4-7. Typical Connections with ABC Rotation and Single-Phase Sensing

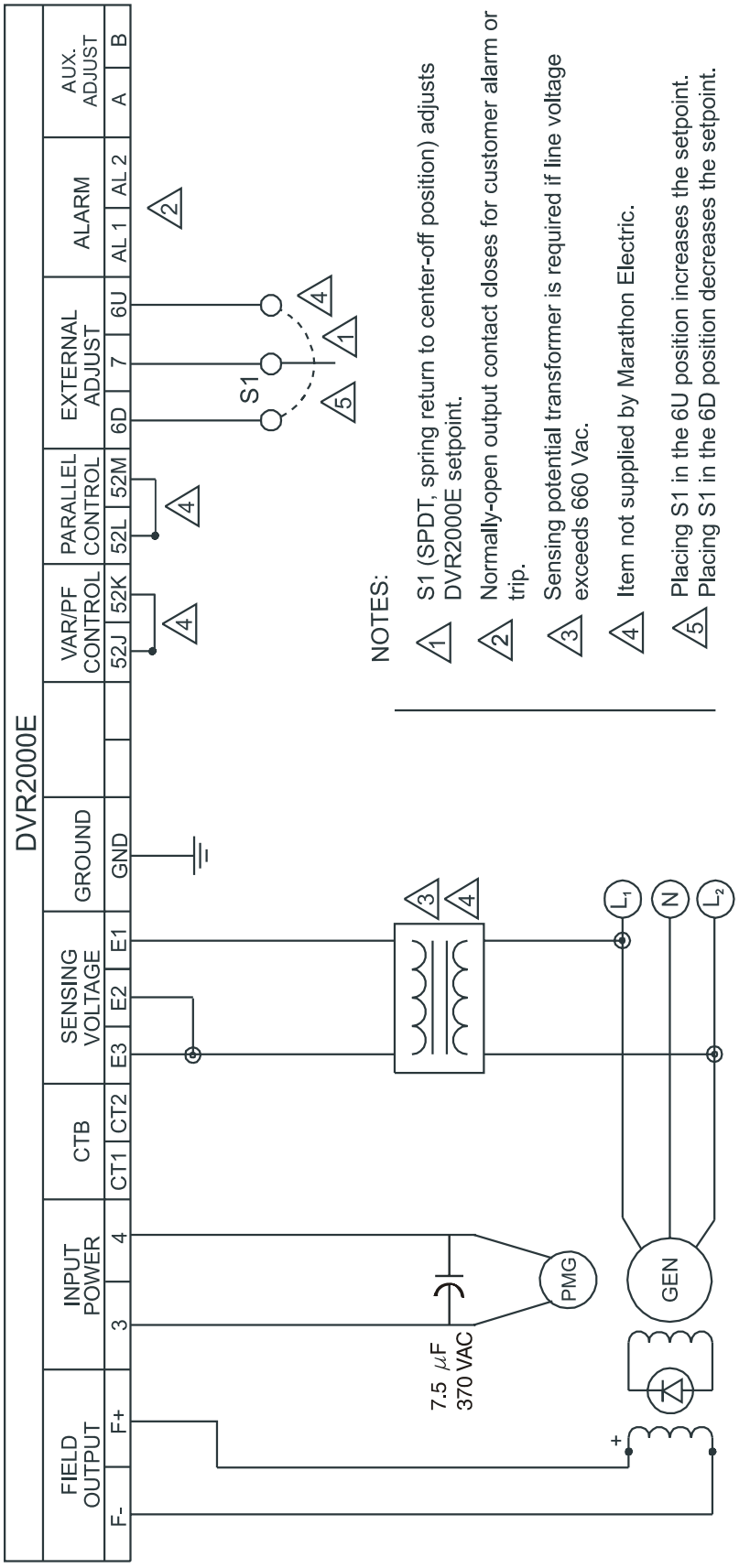

Figure 4-8. Typical Connections to a Single-Phase Generator

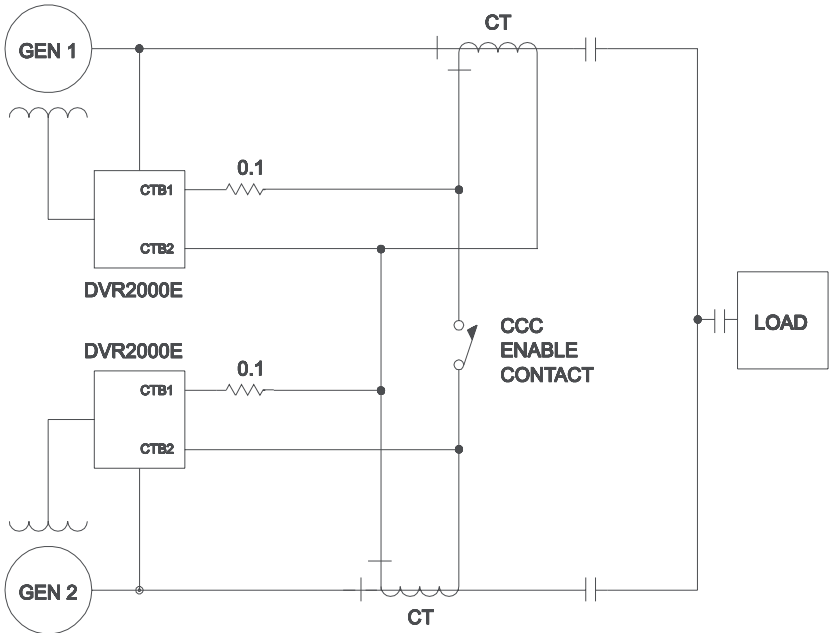

Figure 4-9. Cross-Current (Reactive Differential) Connections for Two Generators

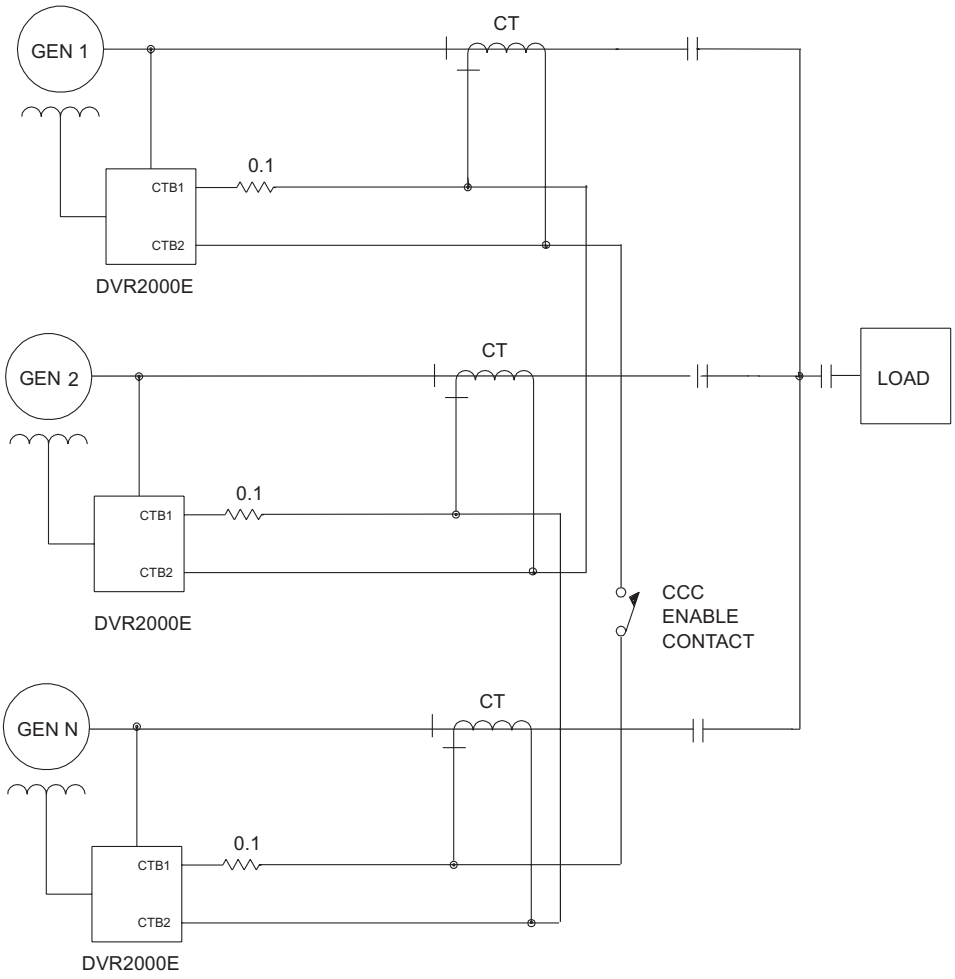

Figure 4-10. Cross-Current (Reactive Differential) Connections for Three or More Generators

PRELIMINARY SETUP

WARNING!

Use caution when working around the rear of the DVR2000E.

Dangerous voltage levels are present at the exposed heatsinks when the unit is energized.

Before starting the generator and DVR2000E for the first time, proceed as follows.

a. Tag and disconnect all wiring to the DVR2000E. Be sure to insulate the wire terminals to prevent a short.

b. Start the prime mover and perform all engine governor adjustments.

c. After all initial governor adjustments have been made, shut down the prime mover.

d. Connect only the power input terminals of the DVR2000E to an auxiliary power source in the specified power input range.

e. Perform all initial DVR2000E settings by using the front panel HMI, connecting a handheld operating with DVR2000E software, or connecting a PC operating with DVR2000E software to the rear commun-ications port of the DVR2000E.

f. Connect the rest of the DVR2000E leads using the tagged identification.

g. Start the prime mover/generator and perform the final adjustments at rated speed and load.

h. After the initial startup, the DVR2000E should not require any further adjustments unless there is a change in the system.

ADJUSTMENTS

All adjustments are made using external switching, the front panel HMI or with DVR2000E software via the rear panel communication port. See Section 5, DVR2000E-32 Software for Windows® OS for more information about making adjustments with DVR2000E software.

SECTION 5 • DVR2000E-32 SOFTWARE FOR WINDOWS® OS

TABLE OF CONTENTS

SECTION 5 • DVR2000E-32 SOFTWARE FOR WINDOWS® OS 40

- INTRODUCTION 40
- INSTALLATION 40
  - Installing DVR2000E-32 40
  - Connecting the DVR2000E and PC 40
- STARTING THE DVR2000E-32 APPLICATION 40
  - Initial Adjustments 41
  - Establishing Communication 42
- CHANGING SETTINGS 43
- SENDING AND RECEIVING SETTINGS 44
  - Sending Settings 44
  - Receiving Settings 44
  - Saving Settings to DVR2000E Memory 44
- SETTING DEFINITIONS 44
  - System Configuration 44
  - Setting Adjustments 45
  - Control Gain 48
  - Analysis 50
  - Protection and Relay Settings 55
  - Metering, Operation and Alarms 56
- PID DATA 60
  - PID Calculation Based on Input Values 60
  - Adding to the PID List 61
  - Removing a PID List Record 61
  - Retrieving Existing Data from the PID List 61
- SETTINGS FILES 61
  - Printing Settings Files 61
  - Saving Settings Files 61
  - Uploading Settings Files 62
- PASSWORD PROTECTION 63
  - Changing the Password 63
- UPDATING EMBEDDED FIRMWARE 63
- TERMINATING COMMUNICATION 67

Figures

Figure 5-1. Electric Folder 40
Figure 5-2. DVR2000E - Title and Version 41

Section 5

Figure 5-3. System Configuration Screen....41
Figure 5-4. Communication Port Menu Selection....42
Figure 5-5. Password Dialog Box....42
Figure 5-6. Communication Initialization Screen....43
Figure 5-7. Wait Dialog Box....43
Figure 5-8. System Configuration Screen....45
Figure 5-9. Setting Adjustments Screen, Setpoint Tab....46
Figure 5-10. Setting Adjustments Screen, Startup Tab....47
Figure 5-11. Setting Adjustments Screen, Engine Unloading Tab....48
Figure 5-12. Control Gain Screen....49
Figure 5-13. Analysis Screen, AVR Tab....51
Figure 5-14. Message Box - Return to AVR Nominal Setpoint....51
Figure 5-15. Analysis Screen, FCR Tab....52
Figure 5-16. Message Box to Return to FCR Nominal Setpoint....53
Figure 5-17. Analysis Screen, PF Tab....53
Figure 5-18. Message Box to Return to PF Nominal Setpoint....54
Figure 5-19. Analysis Screen, VAR Tab....55
Figure 5-20. Message box to return to VAR Nominal Setpoint....55
Figure 5-21. Protection Settings Screen Remove....56
Figure 5-22. Metering, Operation, and Alarms, Operation Tab....57
Figure 5-23. Metering, Operation, and Alarms, Alarm/Status Tab....59
Figure 5-24. PID Window....60
Figure 5-25. User Information Dialog Box for Settings List....62
Figure 5-26. Settings Upload Dialog Box....62
Figure 5-27. Password Dialog Box....63
Figure 5-28. Embedded Software Uploading....64
Figure 5-29. DVR2000E Embedded Program Loader....64
Figure 5-30. Settings File Saved Dialog Box....64
Figure 5-31. Open Dialog Box....65
Figure 5-32. Transferring Hex File Dialog Box....65
Figure 5-33. Open Dialog Box....66
Figure 5-34. Transferring Hex File Dialog Box....66
Figure 5-35. Sending Saved Settings....67
Figure 5-36. Reading & Checking Settings....67

Tables

Table 5-1. DVR2000E Stability Range Settings....48
Table 5-2. Analysis Screen Tab Combinations....50

SECTION 5 • DVR2000E-32 SOFTWARE FOR WINDOWS® OS

INTRODUCTION

DVR2000E-32 software provides a communication link between the DVR2000E and the user. This software enables the user to enter all DVR2000E settings and read all system metering values through an easy to use graphical interface. PID (Proportional + Integral + Derivative) software within the application enables the user to establish proper PID parameters based on a specified generator and/or exciter time constants. Within DVR2000E-32, unit settings can be saved in a computer file and used later to configure other units with the same settings.

INSTALLATION

DVR2000E-32 software operates with IBM compatible personal computers (PCs) using Microsoft® Windows® 95, 98 or NT operating systems. The minimum recommended operating require-ments are listed below.

- IBM compatible PC, 486DX2 or faster (100 MHz or higher microprocessor is recommended)
- CD-ROM drive
- One available serial port

Installing DVR2000E-32

DVR2000E-32 software contains a setup utility that installs the program on your PC. An uninstall utility is loaded with the program that can be used to remove the software from your PC if desired. Use the following procedure to install DVR2000E-32.

1. Insert the CD-ROM into the PC CD-ROM drive.
2. Select Start, then Run in Windows. In the “Open:” box, type d:\setup.exe, where d is the letter designator for your CD-ROM drive. Press the Enter key. The setup utility automatically installs DVR2000E-32 on your PC.

When the software is installed, a folder is added to the Windows® program menu. This folder is accessed by clicking the Start button and pointing to Programs. As illustrated in Figure 5-1, the folder contains icons for the DVR2000E-32 program and a DVR2000E-32 uninstall utility.



Figure 5-1. Folder

Connecting the DVR2000E and PC

Connect a communication cable between the rear RS-232 connector of the DVR2000E and the appropriate communication port of the PC. Refer to Figure 2-2 for the location of the DVR2000E RS-232 connector and Figure 4-5 for the required connections between the DVR2000E and a PC.

STARTING THE DVR2000E-32 APPLICATION

The DVR2000E-32 application is started by clicking the Windows® Start button, pointing to Programs, the folder, and then clicking the DVR2000E-32 icon. At startup, a dialog box with the program title and version number is displayed briefly (Figure 5-2). After this dialog box is displayed, the System Configuration screen is displayed (Figure 5-3).



Figure 5-2. DVR2000E - Title and Version

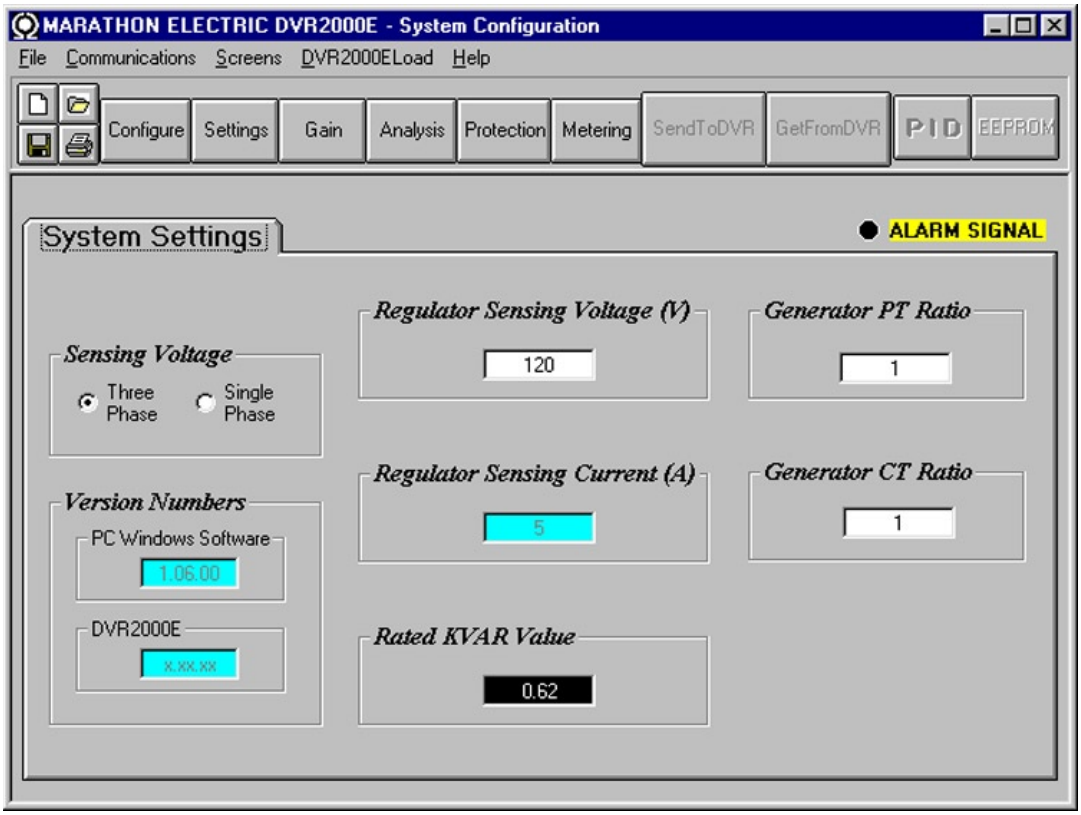

Figure 5-3. System Configuration Screen

Initial Adjustments

CAUTION

Read and understand the operation of the individual adjustments before attempting any initial adjustments.

Before starting the generator, the procedures in the following paragraphs should be performed.

Remove the 5 ampere fuse before starting the generator for the first time. Perform all preliminary engine governor adjustments without the regulator energized.

After initial governor adjustments are complete, reinstall the 5 ampere fuse and connect only the power input leads or PMG leads to the regulator. Remove all other regulator connections that may be present and temporarily insulate them.

Start and run the generator at rated speed. The regulator will perform the self-test and enter a shutdown mode. At this time, initial adjustments can be made.

After the initial adjustments are made, shut down the generator and connect the remaining regulator leads. The generator may be started and final adjustments may be performed on the regulator.

Establishing Communication

Communication between DVR2000E-32 and the DVR2000E must be established before viewing metering values or reading or changing settings. DVR2000E-32 screen settings are updated only after communication is opened or the communication settings have been changed.

Open the DVR2000E communication port by clicking on Communications on the menu bar, hovering the mouse pointer over Open Comm Port, and clicking RS-232 Port. Figure 5-4 illustrates the menu selections for opening the DVR2000E communication port.

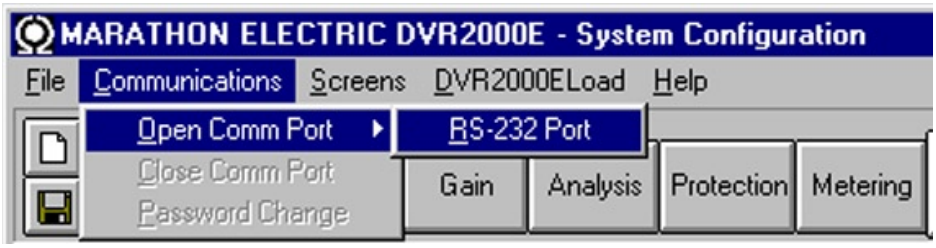

Figure 5-4. Communications Port Menu Selection

Section 5

When RS-232 Port is selected, the Password dialog box of Figure 5-5 appears and prompts you to enter a password. Each DVR2000E is delivered with “dvr” as the default password. See the Password Protection sub-section for information about changing the password.

After the correct password is entered, the Communication Initialization screen of Figure 5-6 is displayed. Select Comm1, Comm2, Comm3 or Comm4 as the active communication port on your PC and click the Initialize button. DVR2000E-32 initializes communication by obtaining the configuration settings from the DVR2000E.

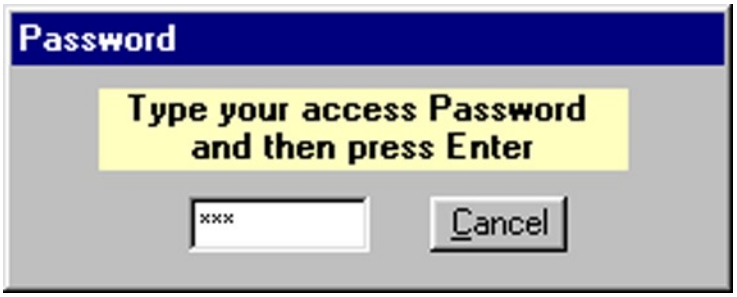

Figure 5-5. Password Dialog Box

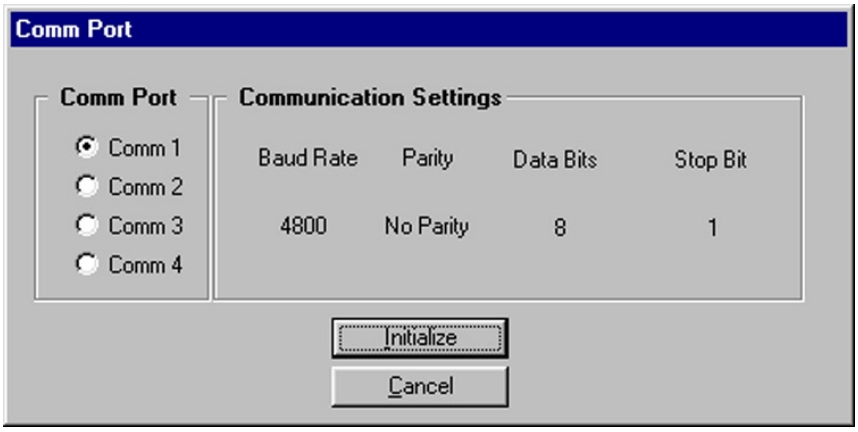

Figure 5-6. Communication Initialization Screen

NOTE

DVR2000E-32 may display the dialog box of Figure 5-7 when initializing DVR2000E communication, obtaining DVR2000E configuration settings or performing other tasks. It's important to wait until the box disappears before trying to execute communication commands. Issuing commands while the Wait dialog box is present may disrupt communication between DVR2000E-32 and the DVR2000E.

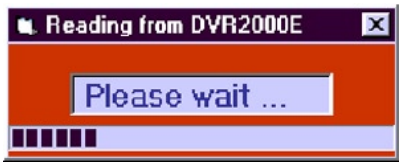

Figure 5-7. Wait Dialog Box

.

CHANGING SETTINGS

CAUTION

Do not disconnect the communications cable while the DVR2000E and PC are communicating

Settings are arranged into six groups.

- System Configuration
- Setting Adjustments
- Control Gain
- Analysis
- Protection Settings
- Metering, Operation, and Alarms

Each setting group has a corresponding button that can be selected to access that group of settings. The six setting groups can also be accessed by clicking Screens on the menu bar and then selecting the desired setting group from the list. Once a setting group is accessed, the individual settings of the group can be viewed and changed.

A setting is changed by clicking within the setting field and typing the new setting. The range limit of a setting can be viewed by double-clicking the setting. Any setting changes made on a setting group screen must be sent to the DVR2000E before viewing other screens. Otherwise, the setting changes will be lost. A single setting change can be sent to the DVR2000E by pressing the Enter key on your PC keyboard. Multiple setting changes can be sent to the DVR2000E by clicking the SendToDVR button. Settings can also be sent to the DVR2000E by clicking Communications on the menu bar and clicking Send To DVR.

SENDING AND RECEIVING SETTINGS

When communication is enabled, DVR2000E settings can be sent or received through DVR2000E-32.

Sending Settings

Settings changes are sent to the DVR2000E by clicking the SendToDVR button. This causes the settings displayed on the current settings screen to become the DVR2000E settings. Settings can also be sent to the DVR2000E by clicking Communications on the menu bar and clicking Send To DVR. Individual setting changes can be sent to the DVR2000E by pressing the Enter key on your PC keyboard after changing the setting.

Receiving Settings

DVR2000E settings are retrieved by clicking the GetFromDVR button. This causes the DVR2000E settings to be displayed on the settings screen. Settings can also be received from the DVR2000E by clicking Communications on the menu bar and clicking Get From DVR.

Saving Settings to DVR2000E Memory

Settings are saved in nonvolatile memory (EEPROM). In the event of a power loss, these are the settings that are active at power up. If settings are changed and sent to the DVR2000E but not sent to EEPROM, the changed settings are lost if DVR2000E operating power is lost. When exiting DVR2000E-32 or closing communication, you are asked if you want to save the settings to EEPROM. This question is asked even if no settings changes were made.

When communication is enabled, setting changes are saved to EEPROM by clicking the EEPROM button. The opportunity to save settings to EEPROM is also given through a dialog box when exiting DVR2000E-32 or closing communication.

SETTING DEFINITIONS

Each of the six setting groups has a corresponding DVR2000E-32 screen. The settings of each screen are categorized by one or more tabs. In the following paragraphs, settings are arranged and defined according to the organization of the DVR2000E-32 screens and tabs.

System Configuration

The System Configuration screen consists of one tab labeled System Settings. Click the Configure button to access the System Configuration screen or click Screens on the menu bar and click System Configuration.

System Settings

System settings are shown in Figure 5-8 and are described in the following paragraphs.

Sensing Voltage. This setting is used to configure the DVR2000E for either single-phase or three-phase sensing voltage.

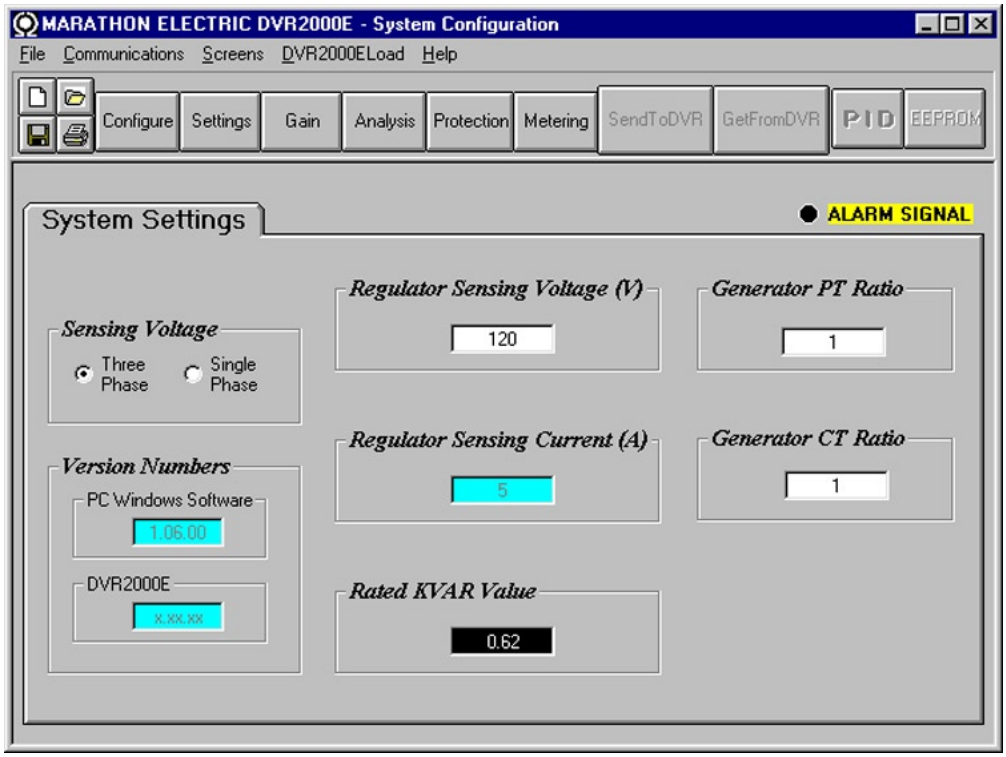

Figure 5-8. System Configuration Screen

Regulator Sensing Voltage (V). The nominal generator line-to-line ac voltage obtained from the generator sensing transformer is entered in this setting field. Voltages within the ranges of 100 to 140 Vac, 200 to 280 Vac, or 340 to 560 Vac may be entered in 0.1 Vac increments. A setting of 600 Vac is also possible.

Regulator Sensing Current (A). This read-only field indicates the rated output of the current transformer (CT) that supplies the DVR2000E with B-phase generator line current.

Version Numbers. These two version numbers are read-only. They indicate the DVR2000E-32 software version and the DVR2000E embedded software version. If a DVR2000E version number is not shown, then the PC and software have not communicated with the DVR2000E. The DVR2000E version number is indicated only when communication between the DVR2000E andDVR2000E-32 occurs.

Generator PT Ratio. The ratio of the generator sensing transformer is entered in this setting field. This ratio allows the voltage displayed through DVR2000E-32 to match the actual generator output voltage. A ratio of 1 to 150 may be entered in increments of 0.01.

Generator CT Ratio. The ratio of the generator B-phase current transformer is entered in this setting field. This ratio allows the current displayed by the DVR2000E to match the actual B-phase generator output current. A ratio of 1 to 1,000 may be entered in increments of 0.1. Note: A 500:5 CT has a ratio of 100.

Rated KVAR Value. This read-only field displays the rated KVAR value.

Setting Adjustments

The Setting Adjustments screen consists of three tabs: Setpoint, Startup, and Engine Unloading.

Setpoint Tab

The Setpoint tab settings of the Setting Adjustments screen are shown in Figure 5-9. Each setting of the Setpoint tab is described in the following paragraphs.

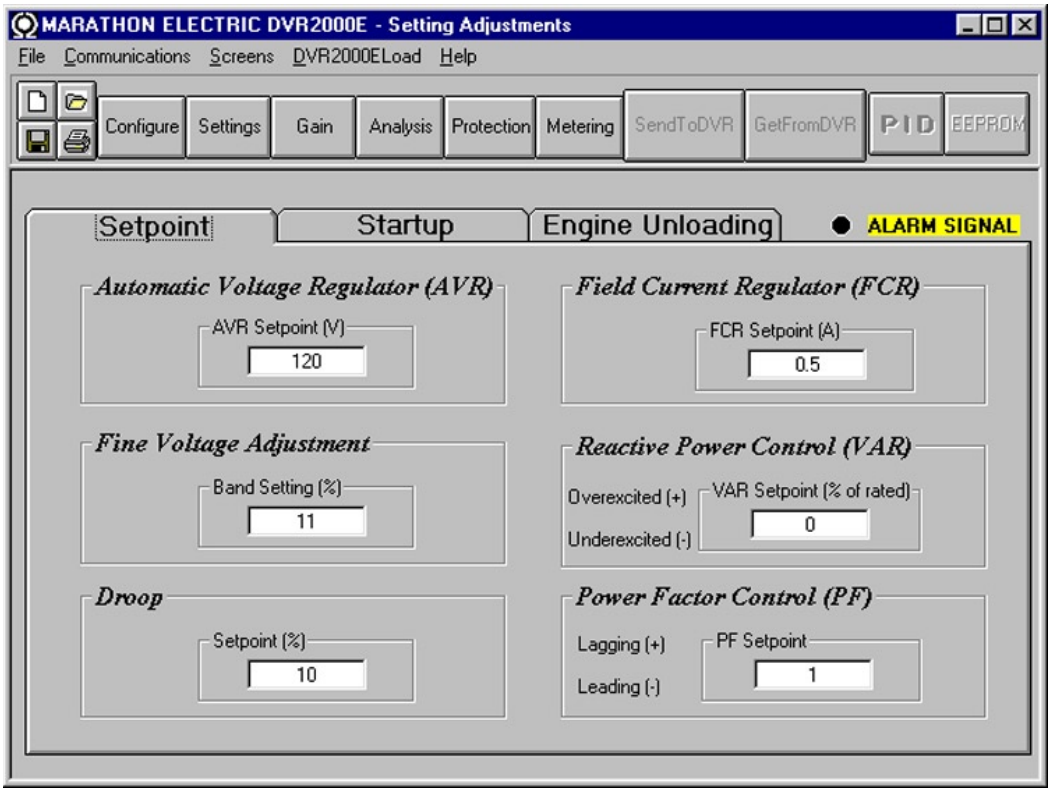

Figure 5-9. Setting Adjustments Screen, Setpoint Tab

Automatic Voltage Regulator (AVR) - AVR Setpoint (V). This setting field is used to enter the desired generator output terminal voltage. The AVR setpoint value range depends on the regulator sensing voltage and band setting.

Fine Voltage Adjustment - Band Setting (%). The Band Setting determines the minimum and maximum adjustment allowed to the AVR Setpoint. This value is expressed as a percentage of the Regulator Sensing Voltage (see Figure 5-8). Band Setting values are entered as a percentage over a range of 0 to 15 percent in 0.1 percent increments.

Droop - Setpoint (%). This setting controls the reactive droop compensation feature of the DVR2000E. The setpoint value is based on a 0.8 power factor load and determines the amount of change permitted in the generator voltage setpoint when the DVR2000E responds to a reactive load. The setpoint value is adjustable from 0 to 10 percent in increments of 0.01 percent.

Field Current Regulator (FCR) - FCR Setpoint (A). This setting defines the field current setpoint when operating in Manual mode. The FCR Setpoint field accepts a value of 0 to 3 Adc in increments of 0.01 Adc

Reactive Power Control (VAR) - VAR Setpoint (% of nom.). The VAR Setpoint determines the level of generator vars maintained by the DVR2000E when operating in Var Control mode. Values from -100 to +100 percent in 1.0 percent increments may be entered in the VAR Setpoint field.

Power Factor Control (PF) - PF Setpoint. The PF Setpoint determines the level of generator power factor maintained by the DVR2000E when operating in Power Factor Control mode. PF Setpoint values are adjustable from -0.6 to -1 (1) or 0.6 to +1 in 0.001 increments.

Startup Tab

The Startup-tab settings of the Setting Adjustment screen are shown in Figure 5-10. Each setting of the Startup tab is described in the following paragraphs.

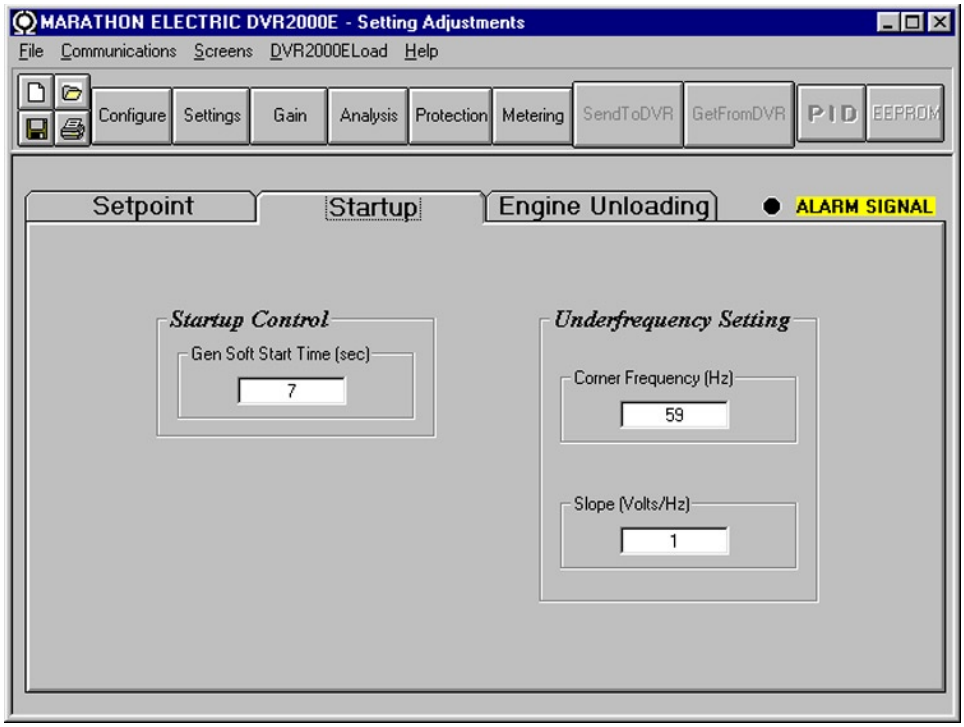

Figure 5-10. Setting Adjustments Screen, Startup Tab

Startup Control - Gen Soft Start Time (sec). This setting defines the time limit for the generator soft-start voltage offset. The soft-start time can be set from 1 to 120 seconds in 1 second increments.

Underfrequency Setting - Corner Frequency (Hz). The Corner Frequency setting defines the value of frequency that causes the DVR2000E to adjust the voltage setpoint so that the generator voltage follows the selected volts per hertz slope. A value of 40 to 65 hertz can be entered in this setting field in 0.01 increments.

Underfrequency Setting - Slope (Volts/Hz). The slope for generator underfrequency protection is selected with this setting. A slope setting of 1 to 3.00 can be entered in increments of 0.01. The slope is a per-unit setting.

Engine Unloading Tab

The Engine Unloading tab settings of the Setting Adjustments screen are shown in Figure 5-11. Each setting of the Engine Unloading tab is described in the following paragraphs.

Unloading Activation – Frequency (Hz). This frequency is entered as a value below the underfrequency corner where the engine unloading feature may be activated. A frequency value of 0.9 to 9.0 hertz can be entered in 0.1 hertz increments.

Unloading Activation – Rate (Hz/25 msec). The engine unloading feature is activated when the frequency rate of change exceeds the setting of this field. An unloading activation rate of 0 to 25.5 hertz per 25 milliseconds can be entered in 0.1 hertz per 25 millisecond increments.

Unloading Droop – Percentage (%). The value in this field defines the percent drop in generator output voltage for each 1.5 percent decrease in generator frequency when operating in the Engine Unloading mode. The Unloading Droop Percentage is adjustable from 1 to 20 percent in 1 percent steps.

Unloading Droop – Time (sec). This value defines the length of time that the Engine Unloading mode may be active before control is passed to the normal Underfrequency mode of operation. Droop time is adjustable from 1 to 5 seconds in 1 second increments.

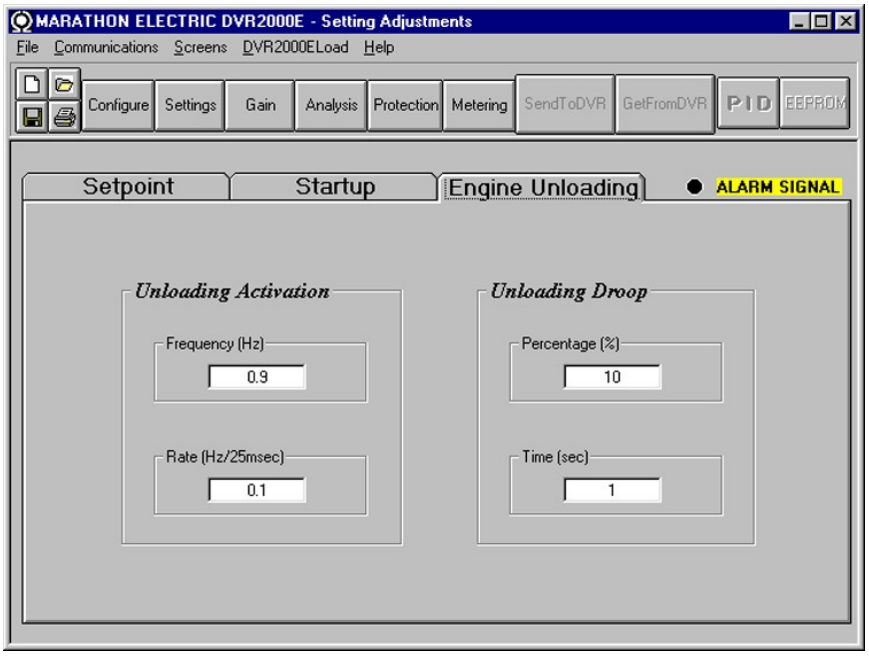

Figure 5-11. Setting Adjustments Screen, Engine Unloading Tab

Control Gain

The Control Gain screen consists of one tab labeled Control Gain. Click the Gain button to access the Control Gain screen or click Screens on the menu bar and click Control Gain.

Control Gain Tab

Control gain settings are shown in Figure 5-12 and are described in the following paragraphs.

Stability Range. This setting selects one of 7 preset stability ranges within the DVR2000E. A guide for selecting the stability range is provided in Table 5-1. A setting of 21 enables the entry of custom stability settings through the DVR2000E-32 PID window. Information about the PID window is provided later under the heading of PID Window. When the Stability Range is set at 21, the PID button may be selected to access the PID window. A Stability Range setting of 1 through 7 disables the PID button and prevents access to the PID window.

Table 5-1. DVR2000E Stability Range Settings

Frame/Poles	Time Constants		Stability Range
	Generator (T'do)	Exciter (Texc)	
360/4	1.0	0.17	1
430/4	1.5	0.25	2
570/4	2.0	0.33	3
740/4	2.5	0.42	4
1,000/4	3.0	0.50	5
740/6	3.5	0.58	6
1,000/6	4.0	0.67	7

AVR/FCR - Proportional Gain KP. This setting selects the proportional constant (KP) stability parameter. The DVR2000E supplies a value that is equivalent to KP multiplied by the error between the voltage setpoint and the actual generator output voltage. KP values of 0 to 1,000 may be entered in increments of 0.01.

Observe the following guidelines when tuning the KP value. If the transient response has too much overshoot, then KP should be decreased. If the transient response is too slow, then KP should be increased.

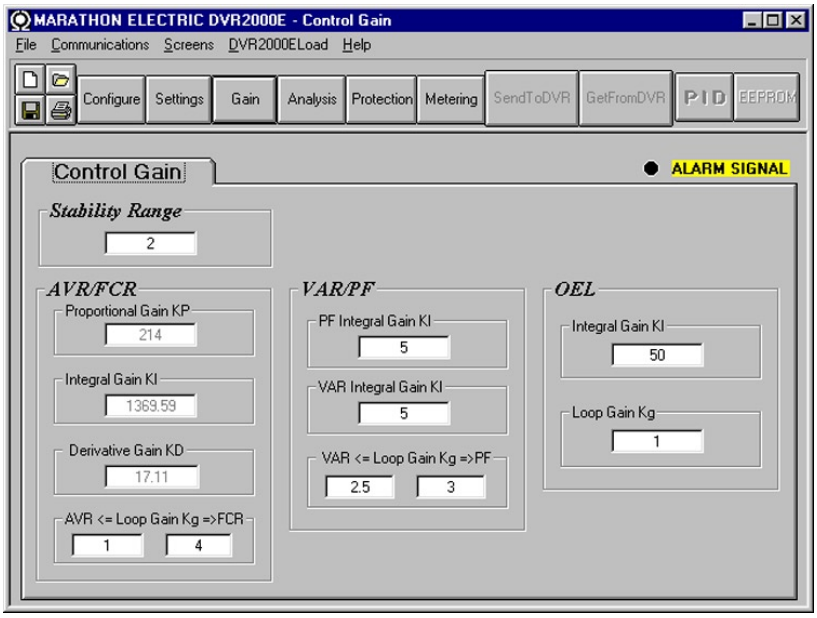

Figure 5-12. Control Gain Screen

AVR/FCR - Integral Gain KI. This setting selects the integral constant (KI) stability parameter. The DVR2000E supplies a value that is equivalent to KI multiplied by the integral of the error between the voltage setpoint and the actual generator output voltage. KI values of 0 to 2,000 may be entered in increments of 0.01.

Increasing the value of KI decreases the time required to reach steady state.

AVR/FCR - Derivative Gain KD. This setting selects the derivative constant (KD) stability parameter. The DVR2000E provides an output value that is equivalent to KD multiplied by the derivative of the error between the voltage setpoint and the actual generator output voltage. KD values of 0 to 1,000 may be entered in increments of 0.01.

Increasing the value of KD reduces transient response ringing.

AVR/FCR - Loop Gain Kg=>AVR. This setting adjusts the loop-gain level of the PID algorithm for AVR . Loop Gain values of 0.5 to 4.5 may be entered for AVR operation in increments of 0.01.

AVR/FCR - Loop Gain Kg=>FCR. This setting adjusts the loop-gain level of the PID algorithm for FCR . Loop Gain values of 0 to 1,000 may be entered FCR operation in increments of 0.01.

VAR/PF - PF Integral Gain KI. This setting adjusts the integral gain and determines the characteristic of the DVR2000E(C) dynamic response to a changed PF setting. PF KI values of 0 to 1,000 may be entered in increments of 0.01.

VAR/PF - Var Integral Gain KI. This setting adjusts the integral gain and determines the characteristic of the DVR2000E(C) dynamic response to a changed var setting. Var KI values of 0 to 1,000 may be entered in increments of 0.01.

VAR/PF - VAR<=Loop Gain Kg=>PF. This setting adjusts the loop-gain level of the PI algorithm for var or power factor control. Loop Gain values of 0 to 1,000 may be entered for var and power factor operation in increments of 0.01.

OEL - Integral Gain KI. This setting controls the rate at which the DVR2000E responds during an overexcitation event. KI values of 0 to 1,000 may be entered in increments of 0.01.

OEL - Loop Gain Kg. This setting adjusts the loop-gain level of the PID algorithm for the over-excitation limiting function. Loop Gain values of 0 to 1,000 may be entered in increments of 0.01.

Analysis

Click the Analysis button or click Screens on the Menu bar and click Analysis to view the Analysis screen. The Analysis screen consists of four tabs: VAR, PF, AVR, and FCR. Each of the tabs displays four metered sensing values and has six alarm signal indicators. Metered sensing values include Vrms (rms voltage), Ifd (dc field current), reactive power (vars), and power factor (PF). Alarm signal indicators include Overexcitation Shutdown, Generator Overvoltage, DVR Overtemperature, Loss of Generator Sensing, Overexcitation Limiting, and Underfrequency Active.

The operating status and control mode of the DVR2000E determine which tabs of the Analysis screen are enabled and can be accessed by the user. Table 5-2 lists the DVR2000E operating status and control modes that enable the four tabs of the Analysis screen.

Table 5-2. Analysis Screen Tab Combinations

Control Mode	Operating Status	Tab Enabled
AVR	OFF	AVR
AVR	PF	AVR, PF
AVR	VAR	AVR, VAR
FCR	N/A	FCR

Control mode and operating status selections are made at the Operation tab of the DVR2000E-32 Metering screen and are discussed later in this section.

AVR Tab

Figure 5-13 illustrates the settings, sensing values, and alarm signal indicators of the AVR tab. The settings of the AVR tab make it possible to increment and decrement the AVR setpoint of the DVR2000E. The sensing values and alarm signal indicators of the AVR tab are also displayed by the other tabs of the Analysis screen.

Voltage Step Response - AVR Setpoint (V) (Nominal). This read-only field indicates the AVR setpoint. (The AVR setpoint is set by using the Setpoint tab of the Setting Adjustments screen). The voltage displayed in the AVR Setpoint field is selected by clicking the adjacent button. Clicking this button sends the AVR Setpoint value to the DVR2000E and changes the color of the button from gray to red.

Voltage Step Response - Increment of AVR Setpoint (V). These two fields indicate the increase that occurs to the AVR setpoint when the corresponding Increment button is clicked. The “% increase” field is used to set and indicate the percentage that the AVR setpoint is increased when the Increment button is clicked. The “AVR Setpoint =” field indicates the value of voltage that corresponds to the “% increase” field. Any setpoint value within range and higher than setpoint value be can also be typed into the “AVR Setpoint =” field which updates the “% increase” field also. The AVR setpoint changes to this value when the adjacent button is clicked. When clicked, the Increment button changes from gray to red to indicate that the AVR setpoint has increased to the value in the “AVR Setpoint =” field.

Voltage Step Response - Decrement of AVR Setpoint (V). These two fields indicate the change that will occur to the AVR setpoint when the corresponding Decrement button is clicked. The “% decrease” field is used to set and indicate the percentage that the AVR setpoint is decreased when the Decrement button is clicked. The “AVR Setpoint =” field indicates the value of voltage that corresponds to the “% decrease” field. Any setpoint value within range and lower than setpoint value can also be typed into the “AVR Setpoint =” field which updates the “% decrease” field also. The AVR setpoint changes to this value when the adjacent button is clicked. When clicked, the Decrement button changes from gray to red to indicate that the AVR setpoint has decreased to the value in the “AVR Setpoint =” field.

Voltage Step Response - Meter. The meter in the AVR tab shows the value selected. If an AVR setpoint value is sent by increase, decrease or setpoint button the meter shows the corresponding value and meter value text box also displays it. Any value within the range can either be input to meter value text box or selected by dragging the pointer in the meter using mouse. This value can then be sent to the unit by pressing Send button.

The setpoint value currently set in the unit by any of the above methods is displayed in the current setpoint textbox. To return to the nominal setting the button adjacent to AVR Setpoint (V) (Nominal) should be pressed. If the AVR analysis screen is left without returning to nominal setpoint, a message box (Figure 5-14) is shown which allows the user to return to nominal setpoint by pressing YES or remain at the current setpoint by pressing NO.

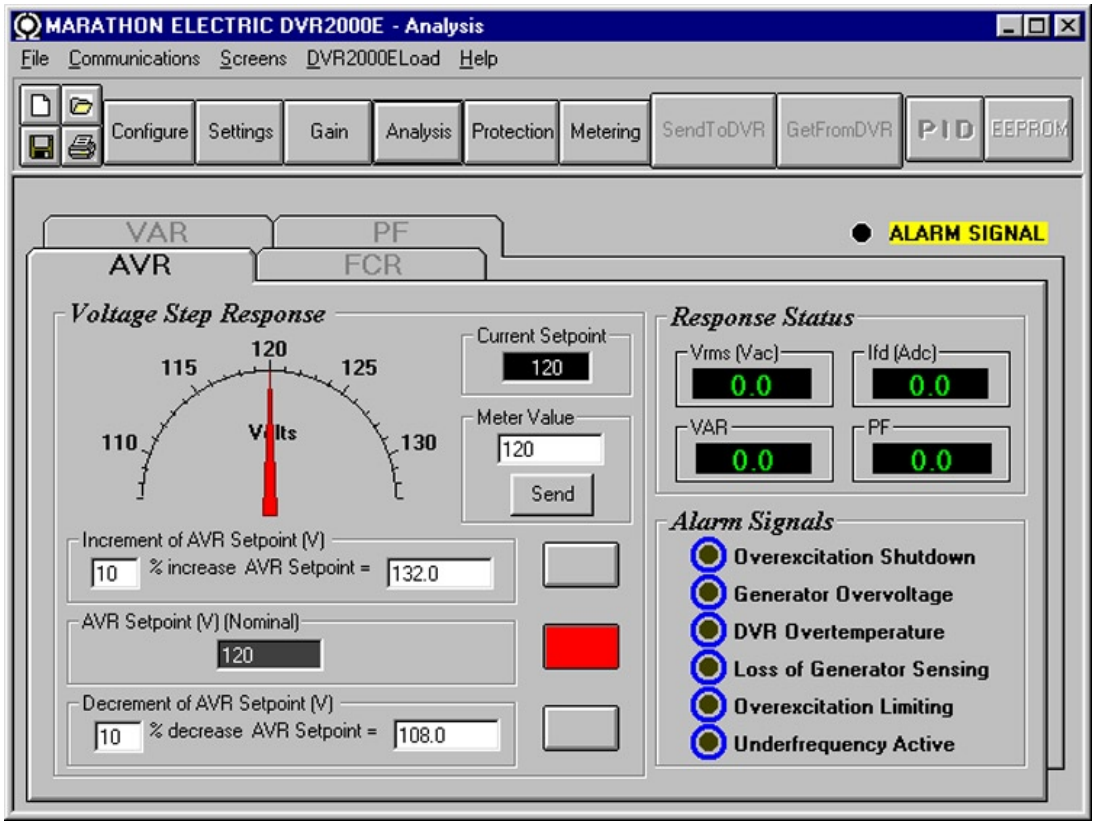

Figure 5-13. Analysis Screen, AVR Tab

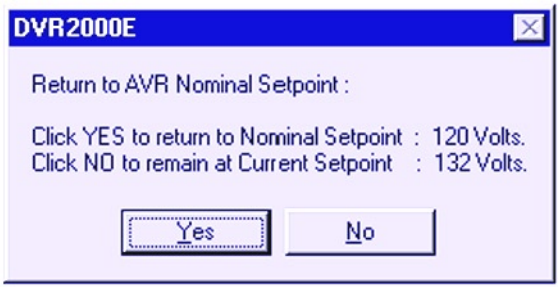

Figure 5-14. Message Box - Return to AVR Nominal Setpoint

FCR Tab

Figure 5-15 illustrates the settings, sensing values, and alarm signal indicators of the FCR tab. The settings of the FCR tab make it possible to increment and decrement the FCR setpoint of the DVR2000E. The sensing values and alarm signal indicators of the FCR tab are also displayed by the other tabs of the Analysis screen.

Field Current Step Response - FCR Setpoint (A). This read-only field indicates the FCR setpoint. (The FCR setpoint is set by using the Setpoint tab of the Setting Adjustments screen). The current displayed in the FCR Setpoint field is selected by clicking the adjacent pushbutton. Clicking this button sends the FCR Setpoint value to the DVR2000E and changes the color of the pushbutton from gray to red.

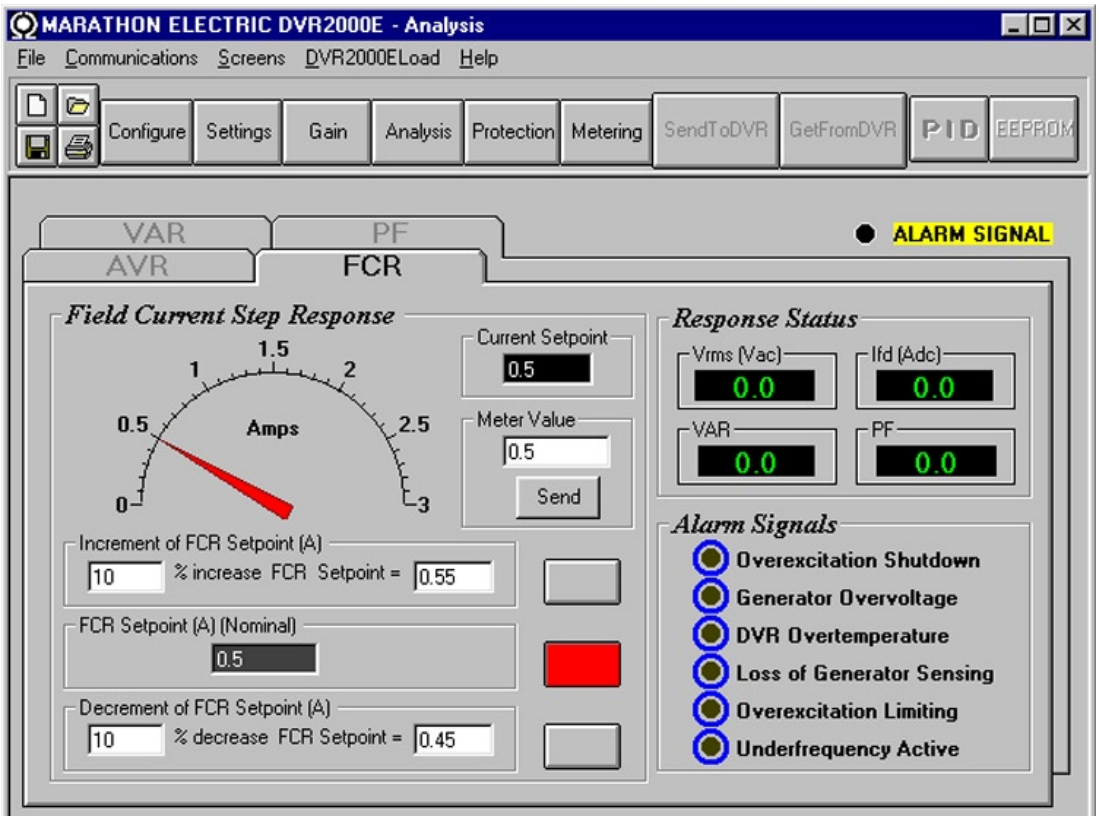

Figure 5-15. Analysis Screen, FCR Tab

Section 5

Field Current Step Response - Increment of FCR Setpoint (A). These two fields indicate the increase that occurs to the FCR setpoint when the corresponding Increment button is clicked. The "% increase" field is used to set and indicate the percentage that the FCR setpoint is increased when the Increment button is clicked. The "FCR Setpoint =" field indicates the value of current that corresponds to the "% increase" field. Any setpoint value within range and higher than setpoint value can also be typed into The "FCR Setpoint =" field which updates the "% increase" field also. The FCR setpoint changes to this value when the adjacent button is clicked. When clicked, the Increment button changes from gray to red to indicate that the FCR setpoint has increased to the value in the "FCR Setpoint =" field.

Field Current Step Response - Decrement of FCR Setpoint (A). These two fields indicate the change that will occur to the FCR setpoint when the corresponding Decrement button is clicked. The "% decrease" field is used to set and indicate the percentage that the FCR setpoint is decreased when the decrement button is clicked. The "FCR Setpoint =" indicates the value of current that corresponds to the "% decrease" field. Any setpoint value within range and lower than setpoint value can also be typed into The "FCR Setpoint =" field which updates the "% decrease" field also. The FCR setpoint changes to this value when the adjacent button is clicked. When clicked, the Decrement button changes from gray to red to indicate that the FCR setpoint has decreased to the value in the "FCR Setpoint =" field.

Field Current Step Response - Meter. The meter in the FCR tab shows the value selected. If an FCR setpoint value is sent by increase, decrease or setpoint button the meter shows the corresponding value and meter value text box also displays it. Any value within the range can either be input to meter value text box or selected by dragging the pointer in the meter, using mouse. This value can then be sent to the unit by pressing Send button.

The setpoint value currently set in the unit by any of the above methods is displayed in the current setpoint textbox. To return to the nominal setting the button adjacent to FCR Setpoint (I) (Nominal) should be pressed. If the FCR analysis screen is left without returning to nominal setpoint a message box is shown (Figure 5-16) which allows the user to return to nominal setpoint by pressing YES or remain at the current setpoint by pressing NO.

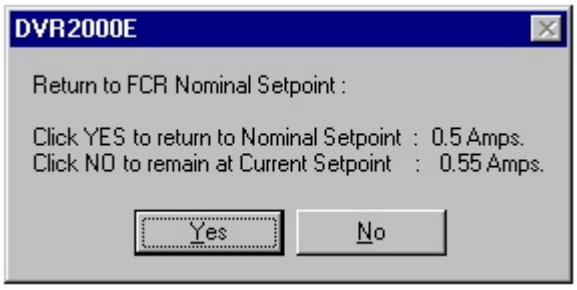

Figure 5-16. Message Box to Return to FCR Nominal Setpoint

PF Tab (Available on DVR2000EC only)

Figure 5-17 illustrates the settings, sensing values, and alarm signal indicators of the PF tab. Each setting of the PF tab is described in the following paragraphs.

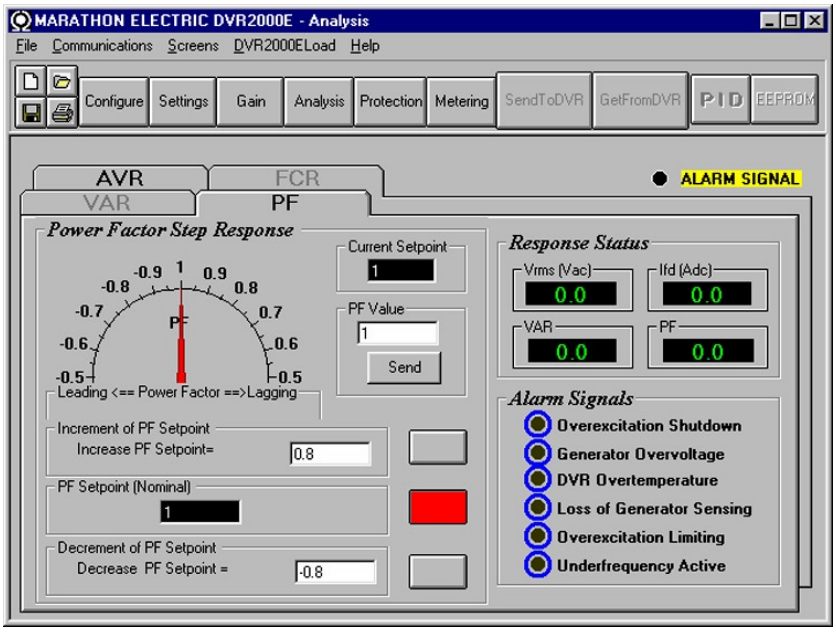

Figure 5-17. Analysis Screen, PF Tab

Power Factor Step Response - Power Factor Setpoint (Nominal). This read-only field indicates the PF setpoint. (The PF setpoint is set by using the Setpoint tab of the Setting Adjustments screen). The value displayed in the PF Setpoint field is selected by clicking the adjacent button. Clicking this button sends the PF Setpoint value to the DVR2000E and changes the color of the button from gray to red.

Power Factor Step Response - Increment of PF setpoint. This field indicate the increase that occurs to the PF setpoint when the corresponding increment button is clicked. Any setpoint value within the range and higher than setpoint value can be input to this filed. The PF setpoint changes to this value when the adjacent button is clicked. When clicked, the Increment button changes from gray to red to indicate that the PF setpoint has increased to the value in the field.

Power Factor Step Response - Decrement of PF setpoint. This field indicate the decrease that occurs to the PF setpoint when the corresponding decrement button is clicked. Any setpoint value within the range and lower than setpoint value can be input to this filed. The PF setpoint changes to this value when the adjacent button is clicked. When clicked, the Increment button changes from gray to red to indicate that the PF setpoint has decreased to the value in the field.

Power Factor Step Response - Meter. The meter in the PF tab shows the value selected. If an PF setpoint value is sent by increase, decrease or setpoint button the meter shows the corresponding value and meter value text box also displays it. Any value within the range can either be input to meter value text box or selected by dragging the pointer in the meter using mouse. This value can then be sent to the unit by pressing Send button.

The setpoint value currently set in the unit by any of the above methods is displayed in the current setpoint textbox. To return to the nominal setting the button adjacent to PF Setpoint (Nominal) should be pressed. If the PF analysis screen is left without returning to nominal setpoint a message box is shown (Figure 5-18) which allows the user to return to nominal setpoint by pressing YES or remain at the current setpoint by pressing NO.

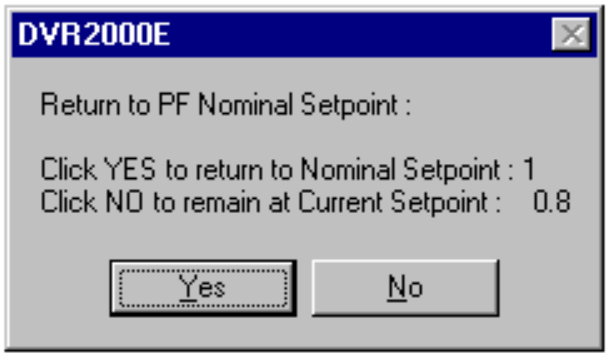

Figure 5-18. Message Box to Return to PF Nominal Setpoint

VAR Tab (Available on DVR2000EC only)

Figure 5-19 illustrates the settings, sensing values, and alarm signal indicators of the VAR tab. Each setting of the VAR tab is described in the following paragraphs.

VAR Step Response - VAR Setpoint (Nominal). This read-only field indicates the VAR setpoint. (The VAR setpoint is set by using the Setpoint tab of the Setting Adjustments screen). The value displayed in the VAR Setpoint field is selected by clicking the adjacent button. Clicking this button sends the VAR Setpoint value to the DVR2000E and changes the color of the button from gray to red.

VAR Step Response - Increment of VAR setpoint. This field indicate the increase that occurs to the VAR setpoint when the corresponding increment button is clicked. Any setpoint value within the range and higher than setpoint value can be input to this filed. The VAR setpoint changes to this value when the adjacent button is clicked. When clicked, the Increment button changes from gray to red to indicate that the VAR setpoint has increased to the value in the field.

VAR Step Response - Decrement of VAR setpoint. This field indicate the decrease that occurs to the VAR setpoint when the corresponding decrement button is clicked. Any setpoint value within the range and lower than setpoint value can be input to this filed. The VAR setpoint changes to this value when the adjacent button is clicked. When clicked, the Increment button changes from gray to red to indicate that the VAR setpoint has decreased to the value in the field.

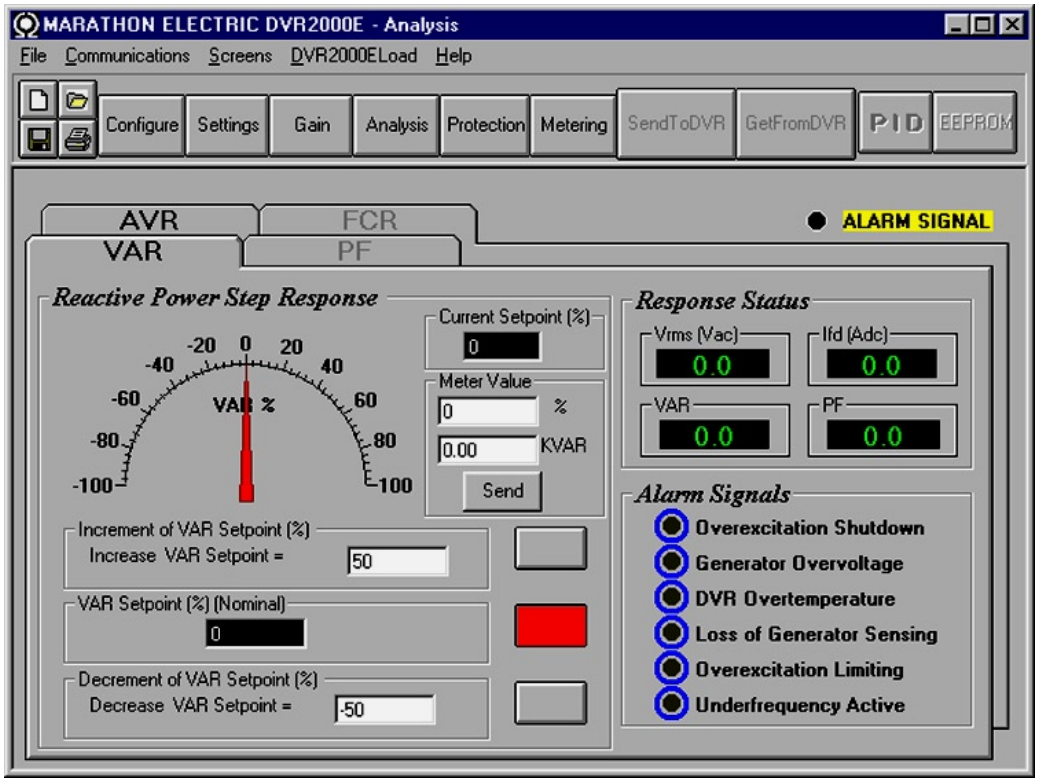

Figure 5-19. Analysis Screen, VAR Tab

VAR Step Response - Meter. The meter in the VAR tab shows the value selected. If an VAR setpoint value is sent by increase, decrease or setpoint button the meter shows the corresponding value and meter value text box also displays it. Any value within the range can either be input to meter value text box or selected by dragging the pointer in the meter using mouse. This value can then be sent to the unit by pressing Send button.

The setpoint value currently set in the unit by any of the above methods is displayed in the current setpoint textbox. To return to the nominal setting the button adjacent to VAR Setpoint (Nominal) should be pressed. If the VAR analysis screen is left without returning to nominal setpoint a message box is shown which allows the user to return to nominal setpoint by pressing YES or remain at the current setpoint by pressing NO.

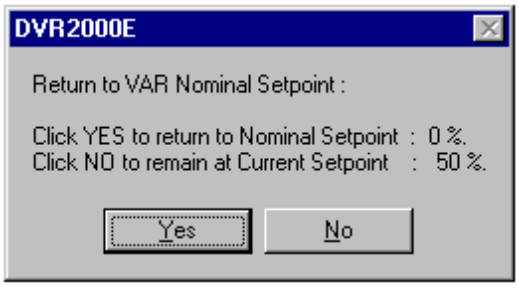

Figure 5-20. Message box to return to VAR Nominal Setpoint

Protection and Relay Settings

The Protection and Relay Settings screen consists of one tab labeled Protection. Click the Protection button to access the Protection screen or click Screens on the menu bar and click Protection/Relay.

Protection Tab

Protection settings are shown in Figure 5-21 and are described in the following paragraphs.

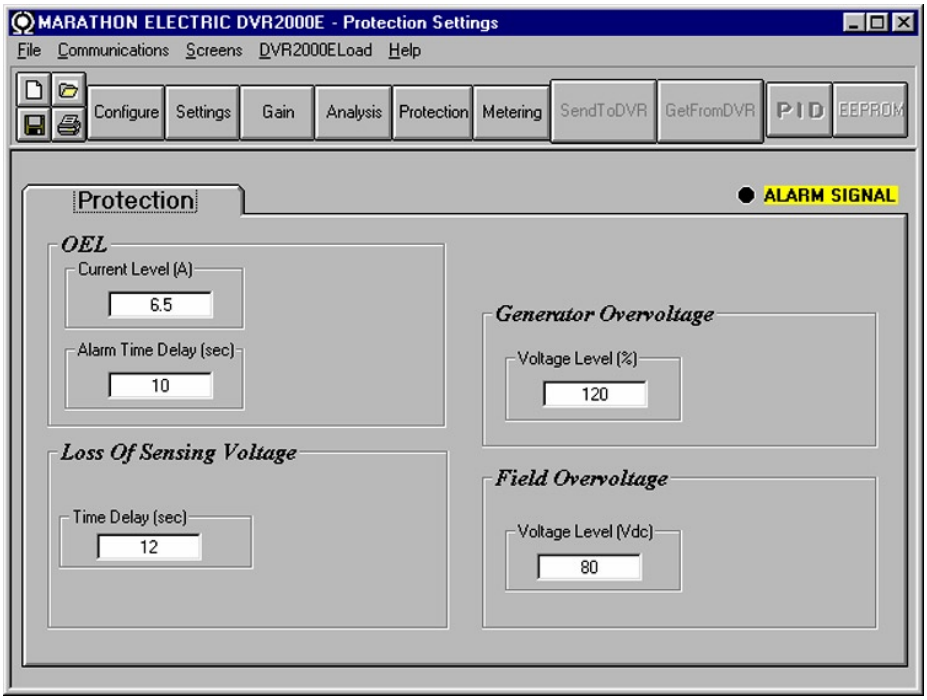

Figure 5-21. Protection Settings Screen Remove

OEL - Current Level (A). The value of current in this field determines the excitation level that will cause the DVR2000E to issue an overexcitation limit alarm. A current level of 0 to 7.5 A may be entered in 0.001 increments. When the level of field current increases above the value of this field, the OVEREXCITATION SHUTDOWN LED on the front panel lights and the OEL time delay starts timing down.

OEL - Alarm Time Delay (sec). The value of this field determines the time delay between when the DVR2000E recognizes an overexcitation condition and the DVR2000E Alarm output (terminals AL1, AL2) closes. A time delay of 0 to 10 seconds may be entered in 1 second increments.

Field Overvoltage - Voltage Level (Vdc). The voltage value in this field determines the field voltage level that will cause the DVR2000E to issue an overexcitation limit alarm. When the field voltage increases above the value of this field, the OVEREXCITATION SHUTDOWN LED on the front panel lights. If the alarm condition exists for more than 15 seconds, the DVR2000E Alarm output (terminals AL1, AL2) closes.

Loss of Sensing Voltage - Time Delay (sec). The value of this field determines the time delay between when a loss of sensing voltage is recognized and the DVR2000E responds according to the Hardware Shutdown and LOS Option options selected. A time delay of 0 to 25 seconds may be entered in 1 second increments.

Generator Overvoltage - Voltage Level (%). The value of this field is expressed as a percentage and determines the level of generator voltage required to initiate a generator overvoltage condition. An overvoltage percentage value of 105 to 120 percent may be entered in 1 percent increments. A generator overvoltage condition lights the GENERATOR OVERVOLTAGE LED on the front panel and closes the Alarm output at DVR2000E terminals AL1 and AL2 after a delay of .75 seconds.

Metering, Operation and Alarms

The Metering, Operation and Alarms screen is viewed by clicking the Metering button or by clicking Screens on the Menu bar and clicking Metering/Operation. Information displayed on the Metering, Operation and Alarms screen can be frozen by clicking the Metering button while viewing the screen or by clicking Metering on the Menu bar and clicking Disable Metering. Metering can be resumed by clicking the Metering button or by clicking Metering on the Menu bar and clicking Enable Metering. The Metering, Operation and Alarms screen consists of two tabs: Operation and Alarm/Status.

Operation Tab

Operation tab metering values, setpoint values and control functions are illustrated in Figure 5-22.

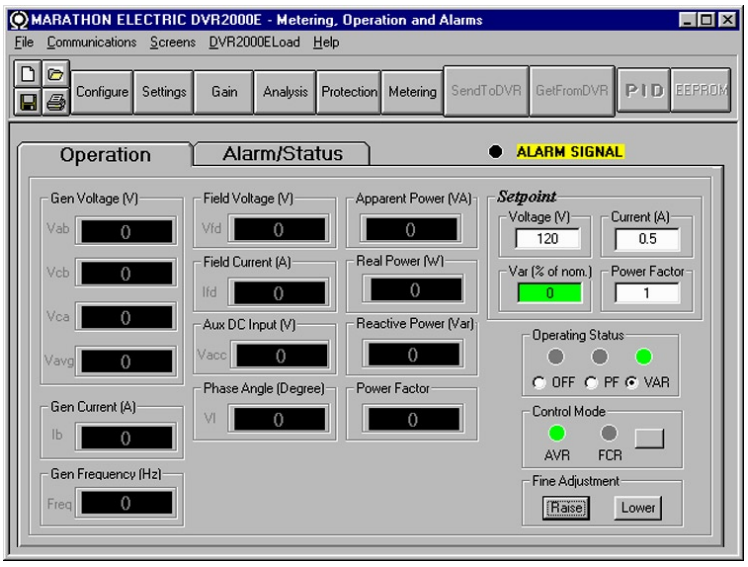

Figure 5-22. Metering, Operation and Alarms - Operation Tab

Gen Voltage (V). These metering values report the status of the V_{A-B}, V_{C-B}, V_{C-A}, and V_{AVG} generator voltages and are the products of the voltage sensed at terminals E1, E2, and E3 and the Generator PT ratio. All metering values are updated once each second. When single-phase sensing is used (System Configuration screen, Sensing Voltage) and the DVR2000E sensing voltage terminals (E1, E2, and E3) are connected as shown in Figure 4-7, all of the generator voltage metering values will be identical.

Gen Current (A). This metering value indicates the level of the B-phase generator current and is the product of the current input to CT1 and CT2 and the CT ratio. Generator current is monitored through DVR2000E terminals CT1 and CT2.

Gen Frequency (Hz). This metering value indicates the frequency of the monitored generator voltage.

Field Voltage (V). This metering value indicates the value of voltage being supplied from the DVR2000E output (terminals F+ and F-) to the generator field.

Field Current (A). This metering value indicates the amount of current flowing from the DVR2000E output (terminals F+ and F-) to the generator field.

Aux DC Input (V). This metering value indicates the level of dc control voltage applied from a remote device to DVR-2000E terminals A and B. The displayed value correlates to the generator voltage setpoint.

Phase Angle (Degree). This metering value indicates the phase angle difference (in degrees) between the generator voltage and the generator current.

Apparent Power (VA). This value is the calculated product of the metered generator voltage (V_{AVG}), metered generator current (Ib), and the square root of 3. See Equation 5-1.

$$VA = V_{AVG} \times I_B \times \sqrt{3}$$

Equation 5-1. Apparent Power Formula

Real Power (W). This value is the calculated product of the metered generator voltage(V_{AVG}), metered generator current (I_B), square root of 3 and the cosine of the metered phase angle. See Equation 5-2.

$$W = V_{AVG} \times I_B \times \sqrt{3} \times \cos\Phi$$

Equation 5- 2. Real Power Equation

Reactive Power (var). This value is the calculated product of the metered generator voltage (VAVG), metered generator current (I_B) square root of 3 and the sine of the metered phase angle. See Equation 5-3.

$$VAR = V_{AVG} \times I_B \times \sqrt{3} \times \sin\Phi$$

Equation 5- 3. Reactive Power Equation

Power Factor. This value is the calculated result of dividing the Real Power (W) value by the Apparent Power (VA) value. See Equation 5-4.

$$PF = W \div VA = COS\Phi$$

Equation 5- 4. Power Factor Equation

Operating Status. The Operating Status controls and indicators include three buttons and three corresponding indicators. Operating Status buttons are labeled PF, VAR, and OFF. Clicking the PF button changes the color of the adjacent PF indicator to green and causes the DVR2000EC to maintain the desired power factor regulation point. The power factor regulation point can be set within the range of 0.6 lead to 0.6 lag. Clicking the VAR button changes the color of the adjacent VAR indicator to green and causes the DVR2000EC to maintain the desired var regulation point. The var regulation point can be set within the range of 100 percent absorb to 100 percent generate. Clicking the OFF button changes the color of the adjacent OFF indicator to red and disables power factor and var regulation.

Operation of the Operating Status controls is determined by the status of the contacts connected across the DVR2000EC Var/PF Control terminals (52J, 52K). When these contacts are open, the Operating Status controls are enabled. Closing the contacts at terminals 52J and 52K disables the Operating Status controls and interrupts regulation of vars or power factor until the contacts are opened again.

Setpoint - Voltage (V). This setting field can be used to enter the desired generator output terminal voltage. The voltage setpoint can also be entered at the Setting Adjustments screen, Setpoint tab, Automatic Voltage Regulator (AVR) - AVR Setpoint (V). The background color of this field is green when operating in AVR mode and power factor and var regulation is disabled.

Setpoint - Current (A). This setting defines the field current setpoint when operating in FCR mode. The current setpoint can also be entered at the Setting Adjustments screen, Setpoint tab, Field Current Regulator (FCR) - FCR Setpoint. Current values from 0 to 3 Adc may be entered in increments of 0.01 Adc. The background color of this field is green when operating in FCR mode.

Setpoint - Var (% of nom.). This setting determines the level of generator vars maintained by the DVR2000EC when operating in var mode. The var setpoint can also be entered at the Setting Adjustments screen, Setpoint tab, Reactive Power Control (VAR) - VAR Setpoint (% of nom.). The background color of this field is green when the DVR2000EC is operating in AVR mode and is regulating the var setpoint.

Setpoint - Power Factor. This setting determines the level of power factor regulation maintained by the DVR2000EC. The power factor setpoint can also be entered at the Setting Adjustments screen, Setpoint tab, Power Factor Control (PF) - PF Setpoint. Power Factor setpoint values are adjustable from -0.6 to -1 (1) or 0.6 to +1 in 0.001 increments. The background color of this field is green when the DVR2000EC is operating in AVR mode and is regulating the power factor setpoint.

Control Mode. Clicking the AVR button changes the color of the adjacent AVR indicator to green and enables the AVR operating mode. When operating in AVR mode, the DVR2000E regulates the generator output voltage at the AVR setpoint. Clicking the FCR button changes the color of the adjacent FCR indicator to green and enables the FCR operating mode. When operating in FCR mode, the DVR2000E maintains the field current at the FCR setpoint.

Fine Adjustment. Raise and Lower buttons control the fine adjustment of the operating setpoint. (The fine adjustment through the front panel push buttons only controls the voltage setpoint.) Raise and Lower buttons perform the same function as closing the appropriate set of contacts connected to the External Adjust terminals (6D and 7 to decrease, 6U and 7 to increase) of the DVR2000E. In AVR mode, each click of the Raise button increases the voltage setpoint 0.1 volts; each click of the Lower button decreases the voltage setpoint 0.1 volts. The minimum and maximum limits for fine adjustment of the voltage setpoint are controlled by the Regulator Sensing Voltage setting (System Configuration screen) and the Fine Voltage Adjustment - Band setting (Setting Adjustments screen). Fine adjustment of the voltage setpoint can be increased/decreased no higher/lower than

the Regulator Sensing Voltage setting plus/minus the Band setting. For example, a Regulator Sensing Voltage setting of 100 volts and a Band setting of 10 percent allows the Fine Adjustment function to increase the voltage setpoint to a maximum of 110 volts and decrease the voltage setpoint to a minimum of 90 volts. For VAR, PF or FCR modes, the Raise and Lower buttons allow fine adjustment over the entire adjustment range.

Alarm/Status Tab

The Alarm/Status tab indicators provide the status of DVR2000E protection functions, control modes, and contact inputs. Alarm/Status tab indicators are illustrated in Figure 5-23 and are described in the following paragraphs.

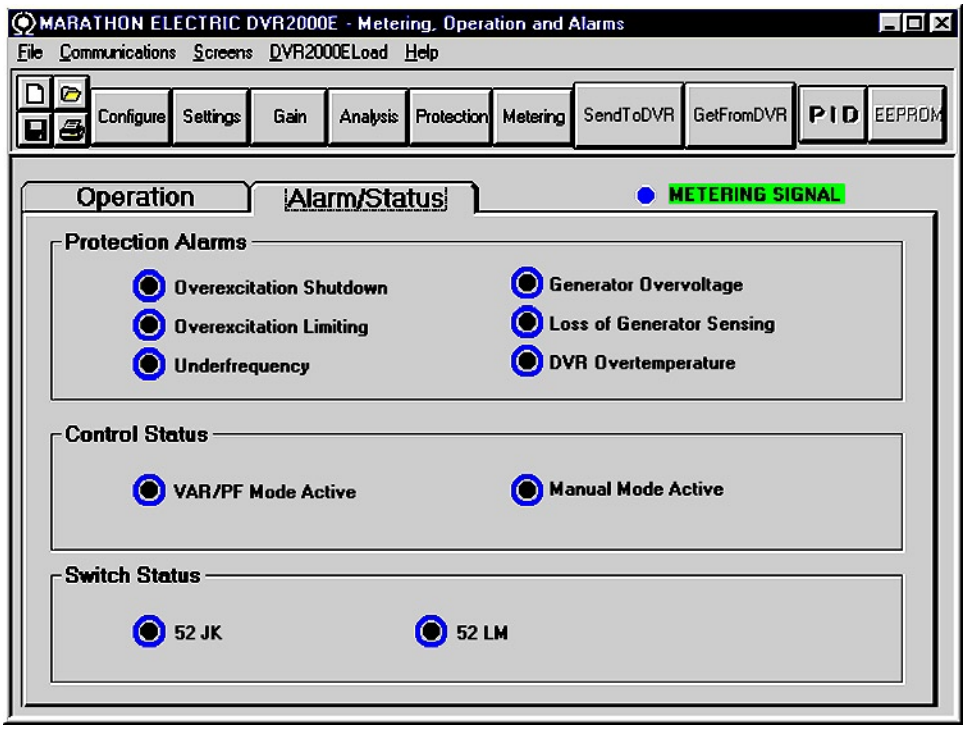

Figure 5-23. Metering, Operation and Alarms - Alarm/Status Tab

Protection Alarms. Six Protection Alarm indicators provide the status of DVR2000E protection functions. Alarm indicators include Overexcitation Shutdown, Overexcitation Limiting, Underfrequency, Generator Overvoltage, Loss of Generator Sensing, and DVR Overtemperature. When a DVR2000E protection function detects an alarm condition, the appropriate indicator changes from black to red.

Control Status. Two Control Status indicators indicate when the VAR/PF and Manual modes are active. The Manual Mode Active indicator changes from black to red when the FCR control mode is active. The VAR/PF Mode Active indicator changes from black to red when the DVR2000EC is operating in AVR mode and correction of power factor or vars is selected.

Switch Status. Three Switch Status indicators indicate when the DVR2000E control inputs are open or closed. The 52JK switch open indicator changes from black to red when the user-supplied contacts at terminals 52J and 52K are closed. When this control input is open, selection of PF or VAR mode can be made on the Operation tab of the Metering, Operation, and Alarms screen. The 52LM switch closed indicator changes from black to red when the user-supplied contacts at terminals 52L and 52M are closed. When this control input is closed, parallel control and droop is inactive.

Metering Signal. The Metering Signal indicator of the Alarm/Status tab flashes to indicate when metering is active. When the Metering button is clicked or Metering on the Menu bar is clicked followed by Disable Metering, the Metering Signal indicator stops flashing and the metering functions stop being updated.

PID DATA

DVR2000E-32 enables generator stability to be set through the automatic calculation of PID parameters. PID stands for Proportional, Integral, Derivative. The word proportional means that the response of the DVR2000E output is proportional or relative to the amount of change that is observed. Integral means that the DVR2000E output is proportional to the amount of time that a change is observed. Integral action eliminates offset. Derivative means that the DVR2000E output is proportional to the required rate of excitation change. Derivative action avoids excitation overshoot.

DVR2000E-32 automatically calculates PID values after the user selects the generator frequency, generator time constant (T'do), and exciter time constant (Texc). With DVR2000E-32, the user may generate new PID numbers, add to a PID list file, and update the AVR gain settings.

The PID window (Figure 5-24) is accessed by clicking the PID button. The PID button can be clicked only when the Stability Range setting of the Control Gain screen is set at a value of 21. (A setting of 21 enables the entry of custom stability settings through the PID window.) Then, when a field of the Control Gain screen is changed or selected, the PID button changes from gray to yellow and the button can be clicked to view the PID window. After the PID numbers are modified, calculated, and updated, the PID window is closed by clicking the Update Setting Screen button. The modified PID values are then shown on the Control Gain screen.

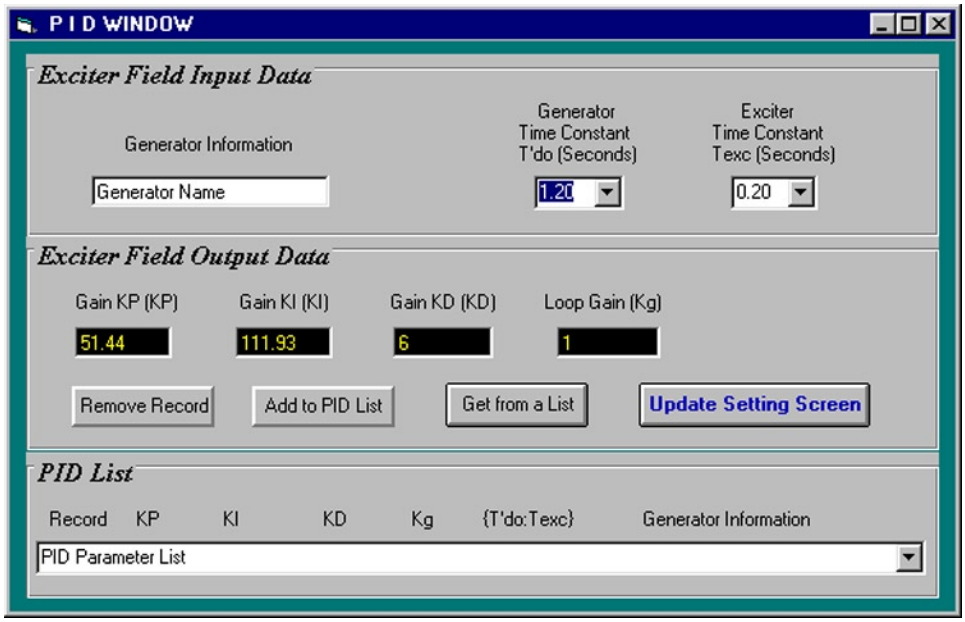

Figure 5-24. PID Window

PID Calculation Based on Input Values

The available range for the exciter time constant depends on the value entered for the generator time constant. (The default value for the exciter time constant is the generator time constant divided by 6.) The generator time constant value selected must be in the range of 1.00 to 15.00 seconds and in 0.05 increments. When the generator time constant value is 1.00, the available exciter time constant range is 0.03 to 0.50 in 0.01 second increments. When the generator time constant value is 15.00, the available exciter time constant range is 0.30 to 3.00 in 0.01 second increments.

For example, when T'do is set at 2.0 seconds, Texc is 0.33. After specifying the input values, a set of PID parameters (output data) is generated automatically. If T'do is set at 5.00 seconds, then Texc is 0.83 seconds. The calculated KP is 155.47, KI is 138.72, KD is 48, and Kg is 1.

PID parameters can be directly removed from, added to, or modified in the PID List Data. PID parameters may also be saved into a file (pidlist.dat).

Adding to the PID List

CAUTION

Improper PID numbers will result in poor system performance or system damage.

PID parameters can be added to a list and recalled for operation and comparison. To add to the list, type a name for the generator (or other appropriate information) in the generator information box. Select the generator time constant. Observe the PID gain parameters in the Field Output Data fields. If these gain parameters are appropriate, click the Add to PID List button. Check for the new parameters by pulling down the PID List (click the Down arrow). The new gain and time constant parameters should be displayed.

Removing a PID List Record

PID parameters can also be removed from the list. To remove a list (record), pull down the PID List and select the record or list so that the gain and time constant parameters are displayed. Click the Remove Record button and the listed record is deleted.

Retrieving Existing Data from the PID List

To retrieve existing data, pull down the PID List and select the record or list so that the gain and time constant parameters are displayed and highlighted. Click the Get from a List button and the listed record input and output data displays in the boxes.

SETTINGS FILES

DVR2000E-32 software enables you to print a list of DVR2000E settings, save DVR2000E settings to a file, and open a settings file and upload those settings to a DVR2000E. a settings file may also be opened and edited within any text editing software.

Printing Settings Files

A printout of DVR2000E settings can be useful for record keeping or comparison purposes. DVR2000E settings are printed by clicking the print icon or clicking File on the Menu bar and then clicking Print. When the print command is given, a print dialog box prompts you to select a printer. Once the printer is selected, a second dialog box (Figure 5-25) provides the opportunity to add a title, unit information, and comments to the settings list. Each entry is limited to a maximum of 60 characters. After this information is entered, OK is clicked and the report is printed.

Saving Settings Files

Saving DVR2000E settings to a file for uploading to other DVR2000E units saves setup time when configuring multiple units to the same configuration. A settings file can also be created in DVR2000E-32 without being connected to a DVR2000E. The settings of the desired screens can be changed and these settings can then be saved to a file. Once a settings file is created, it can be edited using any text editing software, and then saved for uploading.

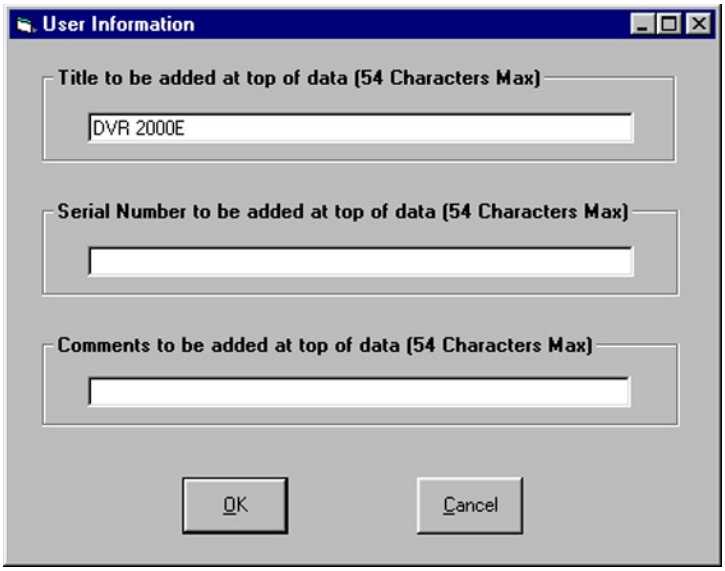

Figure 5-25. User Information Dialog Box for Settings List

A settings file is created by clicking the save icon or by clicking File on the Menu bar and then clicking Save. When the file command is given, a dialog box asks if you want to save the current settings into a DVR2000E data file. Clicking Yes displays a Save As dialog box where the settings are assigned a file name and then saved. All DVR2000E settings files are automatically given a .de1 extension by DVR2000E-32.

Uploading Settings Files

A DVR2000E settings file downloaded from a DVR2000E or created within DVR2000E-32 can be uploaded to multiple DVR2000E units. Only a DVR2000E settings file with a .de1 extension can be uploaded to a DVR2000E unit. Before uploading a file, communication must be initiated with the DVR2000E that is to receive the settings. Refer to the paragraphs under the headings Starting DVR2000E-32, Establishing Communication.

Section 5

CAUTION

Before uploading a settings file, remove operating power from the DVR2000E, disconnect the field wiring from terminals F+ and F- and re-apply operating power to the DVR2000E.

The upload process is started by clicking the open icon or clicking File on the menu bar and then clicking Open. A dialog box is then displayed (Figure 5-26) reminding you that the DVR2000E should be off-line before uploading settings. Clicking Yes loads the settings into DVR2000E memory.

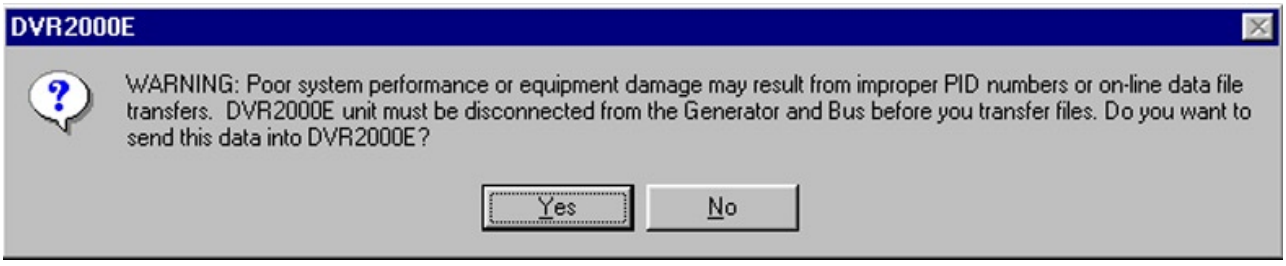

Figure 5-26. Settings Upload Dialog Box

PASSWORD PROTECTION

Password protection guards against unauthorized changing or viewing of DVR2000E settings. A single password protects all DVR2000E settings. The DVR2000E is delivered with a default password of dvr. Changing the password provides security against unauthorized changes to settings. Once changed, the password should be stored in a secure location. If the user-defined password is lost or forgotten, DVR2000E-32 must be reloaded to restore the default password.

Changing the Password

> NOTE
>
> A password change can be made only after communication between DVR2000E-32 and the DVR2000E is established.

A new password can be programmed by performing the following steps.

1. Click Communications on the menu bar and click Password Change on the drop-down menu. The Change Password dialog box of Figure 5-27 appears.
2. Type the current password in the “Enter your access password” field of the Change Password dialog box and press the Enter key on your keyboard.
3. Another dialog box will appear with instructions for making the password change. Click the OK button and type a new password (8 alphanumeric characters, maximum) in the “Enter your new password” field.
4. Press the Enter or Tab key on your keyboard to advance the cursor into the field labeled “Re-enter your new password”. Type the new password again to confirm the changed password and press the Enter key. When the Enter key is pressed, the new password is enabled and a dialog box appears to remind you to keep your password in a secure location.



Figure 5-27. Password Dialog Box

UPDATING EMBEDDED FIRMWARE

The DVR 2000E uses non-volatile flash memory for storing its embedded firmware (operating program) and can be reprogrammed by connecting the RS-232 port, located on the on the back of the device, to a Windows®

compatible PC running the Embedded Program Loader software. It is not necessary to physically replace EPROM chips to update the program.

The process of updating the embedded firmware can be started by clicking DVR2000ELoad on the menu bar and clicking Uploading Embedded Software. A warning window, Figure 5-28, will be displayed. The DVR 2000E should be disconnected from the generator and bus before continuing with this procedure and the current settings file should be backed up since uploading may replace some settings with defaults. Clicking No will cancel this procedure.

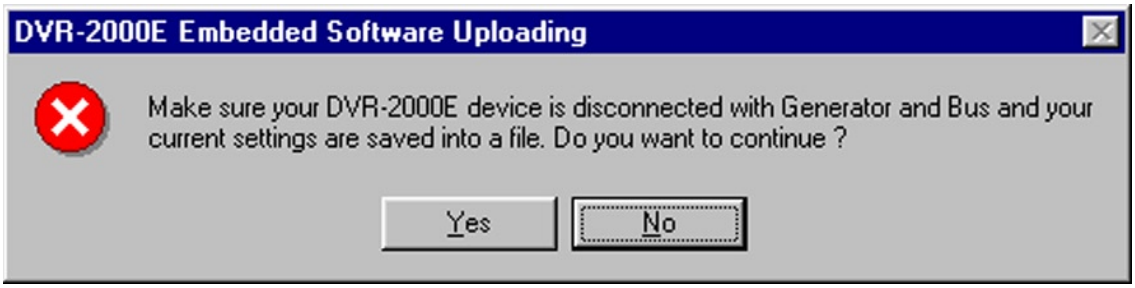

Figure 5-28. Embedded Software Uploading

Click Yes to proceed with software uploading. When Yes is clicked, the following screen is shown to select the communication port. When Initialize is selected, PC Software reads , checks within ranges and saves all settings. The following progress bar is shown while in process.



Figure 5-29. Communication Settings

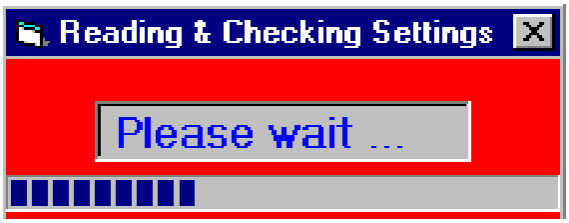

Figure 5-30. Comm Port

The DVR2000E Embedded Program Loader (Figure 5-31) will be displayed by clicking Yes.

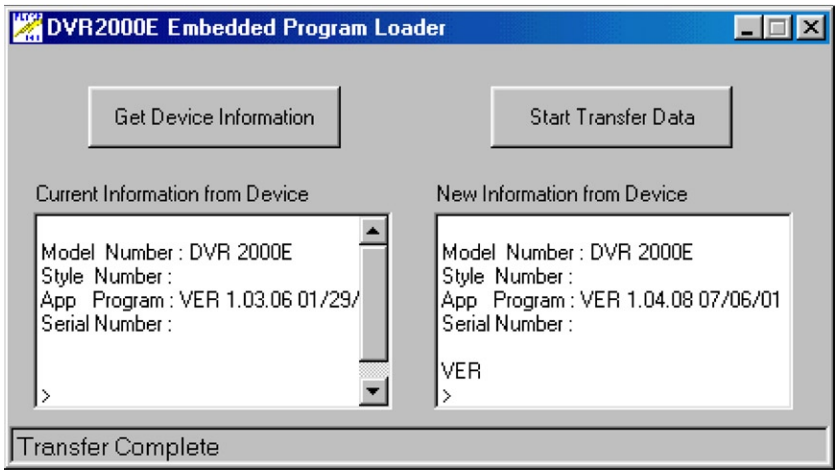

Figure 5-31. DVR2000E Embedded Program Loader

Clicking the Get Device Information button displays the current device's model number, style number, application program version and serial number in the lower left hand corner of Figure 5-31.

CAUTION

If power is lost or communication is interrupted during transfer, the unit will not recover and will no longer be operational.

Clicking the Start Transfer Data button displays the Settings File Saved? window (Figure 5-32). Clicking No in the Settings File Saved window will return the user to the DVR2000E Embedded Program Loader screen (Figure 5-29). Clicking Yes will display the Open Dialog box (Figure 5-33).

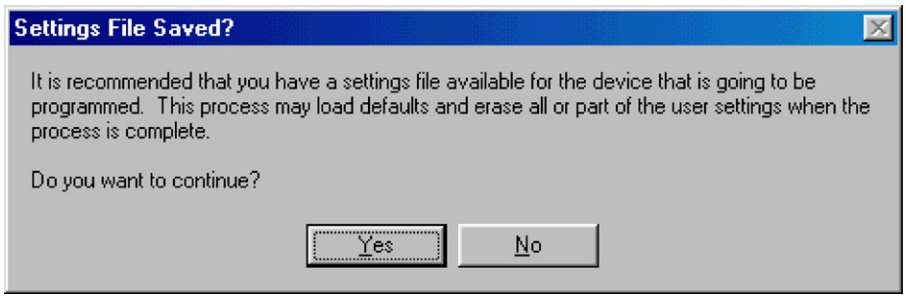

Figure 5-32. Settings File Saved Dialog Box

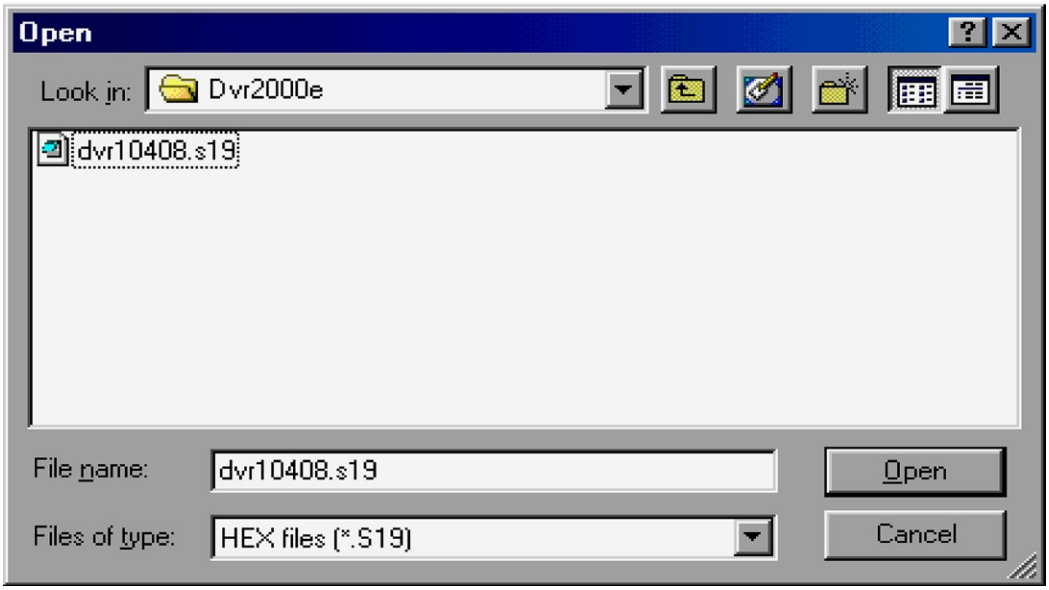

Figure 5-33. Open Dialog Box

Select the location of the embedded firmware update file, select the file, and click Open. The embedded firmware will begin transferring from the PC to the DVR 2000E. A progress bar, as displayed in Figure 5-34 marks the progress of the transfer.

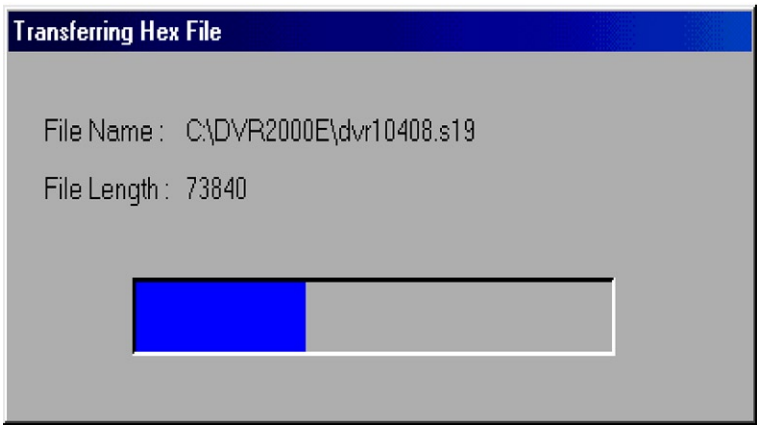

Figure 5-34. Transferring Hex File Dialog Box

The DVR 2000E unit will reboot automatically upon completion of the transfer. The new information from the device will be displayed in the lower right hand corner of the Embedded Program Loader dialog box. See Figure 5-31. Close the DVR2000E Embedded Program Loader. PC software then loads the default settings. The saved settings will be loaded back into the unit (Figure 5-35) and checked again (Figure 5-36).

TERMINATING COMMUNICATION

DVR2000E communication is terminated by clicking on Communications on the menu bar, and clicking Close Comm Port. You are asked if you want to save the settings to EEPROM. This question is asked even if no changes were made to the DVR2000E settings. When you execute the Close command (with a Yes or No to save settings to EEPROM), communication with the DVR2000E is terminated. If you choose to exit DVR2000E-32 (by clicking File on the menu bar and then Exit) without first closing communication, you are still given the opportunity to save the settings to EEPROM.

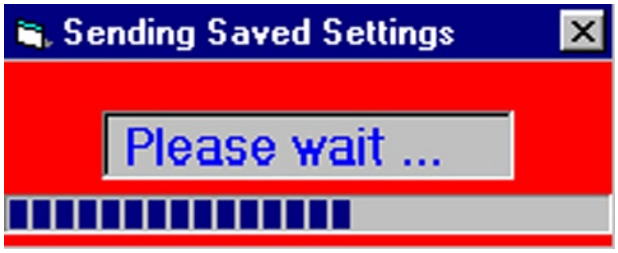

Figure 5-35. Sending Saved Settings

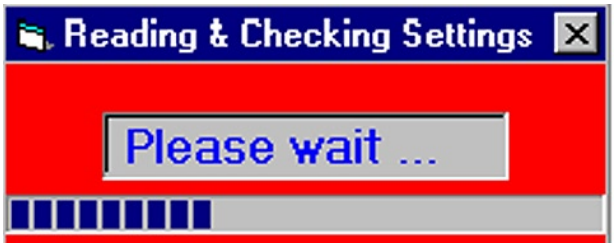

Figure 5-36. Reading & Checking Settings

SECTION 6 • DVR2000E SOFTWARE FOR THE PALM OS® PLATFORM

TABLE OF CONTENTS

SECTION 6 • DVR2000E SOFTWARE FOR THE PALM OS® PLATFORM 70

INTRODUCTION.....70
INSTALLATION 70
Installing The Software 70
Connecting the DVR2000E and Handheld 72
STARTING THE SOFTWARE 72
INITIAL ADJUSTMENTS 74
SOFTWARE OPERATING MODES.....75
On-Line Mode.....75
Off-Line Mode.....75
MAIN SCREEN 76
Change Password 77
Navigating Through the Setting Groups 78
Changing Settings 79
Alarm and Contact Input Status 79
System Status 80
Software Version Information.....82
Contact Information 82
U.S. Regional Numeric Settings Information 82
SOFTWARE FILE OPERATIONS SCREEN 83
Creating a Settings File 83
Sending a Settings File to the DVR2000E.....83
Reading Settings from the DVR2000E 84
Deleting User-Created Settings Files 84

Figures
FIGURE 6-1. WELCOME SCREEN 71
FIGURE 6-2. SELECTION DESTINATION DIRECTORY SCREEN 71
FIGURE 6-3. MODULES SELECTION SCREEN.....71
FIGURE 6-4. SELECT A USER SCREEN.....72
FIGURE 6-5. INSTALLATION COMPLETE SCREEN 72
FIGURE 6-6. MAIN MENU ICONS SCREEN 73
FIGURE 6-7 PLEASE ENTER PASSWORD SCREEN 73
FIGURE 6-8. PASSWORD IS INCORRECT SCREEN.....73

FIGURE 6-9. SOFTWARE STARTUP SCREEN 74
FIGURE 6-10. WHICH MODE SCREEN 74
FIGURE 6-11. SETTINGS SELECTION SCREEN....75
FIGURE 6-12. DOWNLOADING PROGRESS 75
FIGURE 6-13. FILE OPERATIONS SCREEN 76
FIGURE 6-14. MAIN SCREEN....77
FIGURE 6-15.CHANGE PASSWORD DIALOG BOX SCREEN....77
FIGURE 6-16.ENTER NEW PASSWORD SCREEN....77
FIGURE 6-17.NEW PASSWORD IS SCREEN 78
FIGURE 6-18. SETTINGS CHANGE - PART 1 SCREEN 79
FIGURE 6-19.SETTING CHANGE – PART 2 SCREEN....79
FIGURE 6-20.ALARM/CONTACT STATUS SCREEN 80
FIGURE 6-21.READING DATA SCREEN....80
FIGURE 6-22. SYSTEM STATUS WITHOUT OPERATING MODE SCREEN....80
FIGURE 6-23. SYSTEM STATUS WITH OPERATING MODE SCREEN 81
FIGURE 6-24. COMMAND NOT AVAILABLE SCREEN....81
FIGURE 6-25. ABOUT SCREEN....82
FIGURE 6-26. CONTACT SCREEN....82
FIGURE 6-27. NUMERIC SETTINGS SCREEN 83

Tables

Table 6-1. Settings Group Summary.... 78

Section 6

SECTION 6 • DVR2000E SOFTWARE FOR THE PALM OS® PLATFORM

INTRODUCTION

Software for the Palm OS® platform provides a portable communication link between the DVR2000E and the user. The software enables the use of a Palm OS® handheld or personal digital assistant (PDA) to view and change DVR2000E settings and create a settings file that can be uploaded to DVR2000E units.

INSTALLATION

Software for the Palm OS® platform has the following minimum recommended installation and operating requirements.

- IBM-compatible personal computer (PC)
  - 486DX2 or faster microprocessor
  - Microsoft Windows® 95, 98, ME or NT 4.0 operating system
  - CD-ROM drive
  - One available serial port
  - Palm™ Desktop software, version 3.0.1 or later
- Palm OS® handheld
  - Palm OS® version 3.3 or later
- HotSync® cable or cradle

Installing The Software

Software for the Palm OS® platform is comprised of a series of files that run as a single application on the handheld. A setup utility automatically loads the files into the Palm Desktop application Install Tool on the PC. The software is installed on the handheld during the next HotSync® operation.

Use the following procedure to install the software on the handheld.

Section 6

> NOTE
>
> The Palm™ Desktop software supplied with the handheld must be installed on the PC before the software's setup utility is run.
>
> The handheld must have a unique user identification in order for the installation of the software to be successful. This is accomplished by performing a HotSync® operation before installing the software.

1. Insert the software installation CD into the CD-ROM drive of the PC.
2. When the DVR2000E Setup and Documentation CD menu appears, click the Install button for the Palm OS® Program. The setup utility starts and displays the Welcome Screen of Figure 6-1. Click the Next> button to view the Select Destination Directory Screen (Figure 6-2).

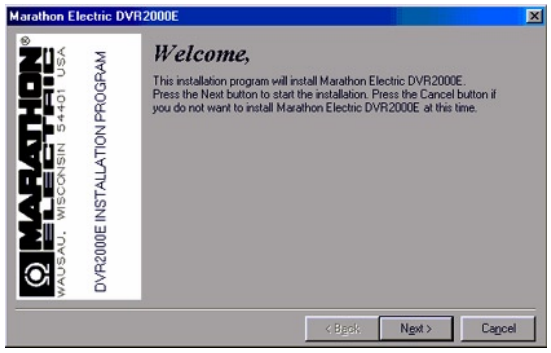

Figure 6-1. Welcome Screen

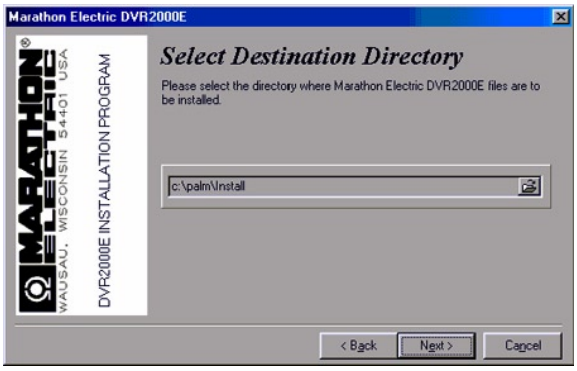

Figure 6-2. Selection Destination Directory Screen

3. Accept the default installation location by clicking Next> or change the location to the desired folder and click Next>. The Modules Selection Screen (Figure 6-3) appears.

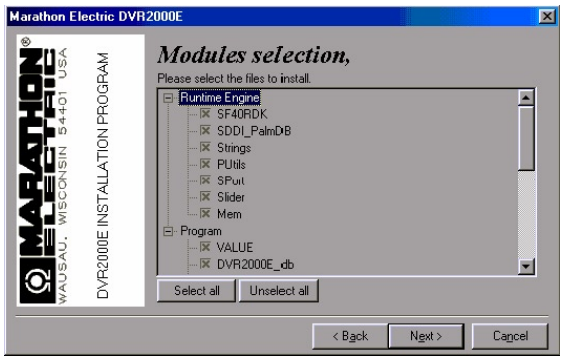

Figure 6-3. Modules Selection Screen

4. Select all of the software files for installation by clicking the Select all button. Click the Next> button to proceed to the Select A User Screen (Figure 6-4).

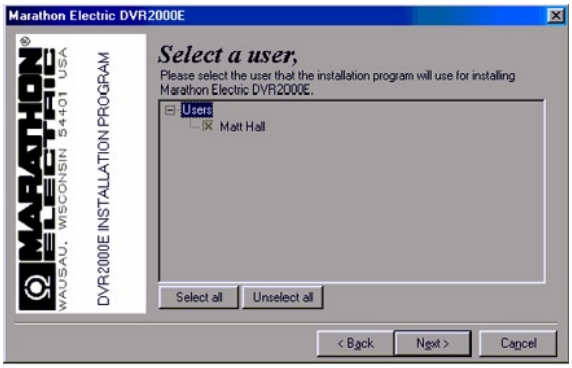

Figure 6-4. Select A User Screen

5. Click the check box next to the desired user or click the Select all button to make the software available to all users. Click the Next> button to complete the installation. The Installation Complete Screen (Figure 6-5) appears and confirms that the software was installed successfully. Click the Quit button to exit the setup utility.

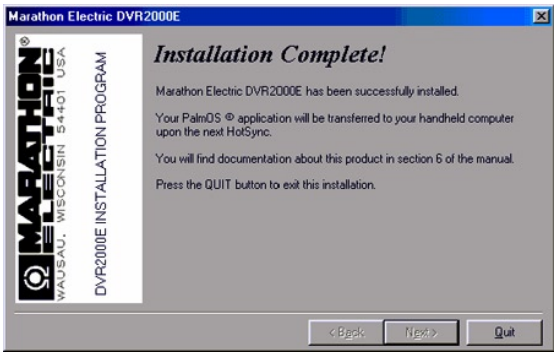

Figure 6-5. Installation Complete Screen

6. Connect the handheld and PC using a HotSync® cable or cradle and perform a HotSync® operation to load the software on the handheld.

Section 6

Connecting the DVR2000E and Handheld

Communication between the DVR2000E and the handheld requires the proper connections. A 9-pin, male-to-male, null-modem adapter can be used to connect the handheld to the DVR2000E in series with a HotSync® cable.

STARTING THE SOFTWARE

The software is started by tapping the DVR2000E icon on the Main Menu Icons Screen (Figure 6-6) of the handheld. The Please Enter Password Screen appears (Figure 6-7). The default password is “DVR.” Tap “OK” after entering the password. If the password entered is incorrect, the Password Is Incorrect Screen (Figure 6-8) appears. Tapping “OK” will close the application. The password can be entered by using your stylus and Graffiti® script in the writing area of your handheld. An alternative method is to bring up the keyboard display and tap out the alphabetic code using the stylus followed by a tap to “DONE.” The keyboard can be displayed by tapping the “abc” symbol in the lower left side of the handheld screen.

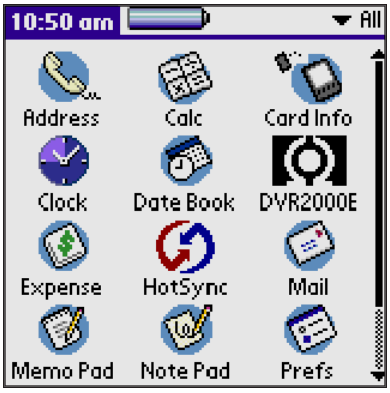

Figure 6-6. Main Menu Icons Screen



Figure 6-7 Please Enter Password Screen



Figure 6-8. Password Is Incorrect Screen

If the password entered is correct, the Software Startup Screen (Figure 6-9) appears briefly followed by the Which Mode Screen (Figure 6-10) asking if you want to work on-line or off-line.

NOTE

Ensure that the handheld is connected to the DVR2000E with the correct cable before attempting to work in the On-Line mode. If the communication cable is not connected, the handheld will lock up and require a soft reset.



Figure 6-9. Software Startup Screen



Figure 6-10. Which Mode Screen

Section 6

INITIAL ADJUSTMENTS

CAUTION

Read and understand the operation of the individual adjustments before attempting any initial adjustments.

Before starting the generator, the procedures in the following paragraphs should be performed.

Remove the 5 ampere fuse before starting the generator for the first time. Perform all preliminary engine governor adjustments without the regulator energized.

After initial governor adjustments are complete, reinstall the 5 ampere fuse and connect only the power input leads or PMG leads to the regulator. Remove all other regulator connections that may be present and temporarily insulate them.

Start and run the generator at rated speed. The regulator will perform the self-test and enter a shutdown mode. At this time, initial adjustments can be made.

After the initial adjustments are made, shut down the generator and connect the remaining regulator leads. The generator may be started and final adjustments may be performed on the regulator.

SOFTWARE OPERATING MODES

The software has two modes of operation: On-Line and Off-Line. On-Line mode enables direct com-munication with the DVR2000E. In On-Line mode, DVR2000E settings can be viewed and changed, and system alarms and status indicators can be verified. The Off-Line mode can be used to view and edit settings files when the handheld is not connected to the DVR2000E. The handheld can then be connected to the DVR2000E and the settings file uploaded.

The following paragraphs describe how each software operating mode is accessed.

On-Line Mode

Tapping the On-Line button in the Which Mode Screen (Figure 6-10) establishes communication between the software and the DVR2000E. When communication is established, the software downloads the settings from the DVR-2000E so that they can be viewed and edited on the handheld. The screen shown in Figure 6-12 is displayed when the software is downloading settings from the DVR2000E.

Off-Line Mode

Tapping the Off-Line button in the Which Mode Screen (Figure 6-10) displays the Settings Selection Screen (Figure 6-11) that asks the user Which Settings? The user is prompted to select either the factory-default DVR2000E settings (Default button) or a user-created settings file (Open… button) from a list of settings files stored on the handheld.



Figure 6-11. Settings Selection Screen

Tapping the Default button causes the software to retrieve the factory-default settings from the handheld so that they can be viewed and edited. A screen similar to the one shown in Figure 6-12 is displayed while the software retrieves the factory-default settings.



Figure 6-12. Downloading Progress

Tapping the Open button displays the File Operations Screen of Figure 6-13. One of 10 user-created settings files or the factory-default settings file can be selected from the list displayed on this screen. When the settings file name is tapped, the settings are retrieved. A screen similar to the one shown in Figure 6-12 is displayed while the software retrieves the factory-default settings or user-created settings file. When the settings file has been retrieved, a dialog box appears and confirms that the settings were loaded. Tapping the OK button displays the Main Screen shown in Figure 6-14.

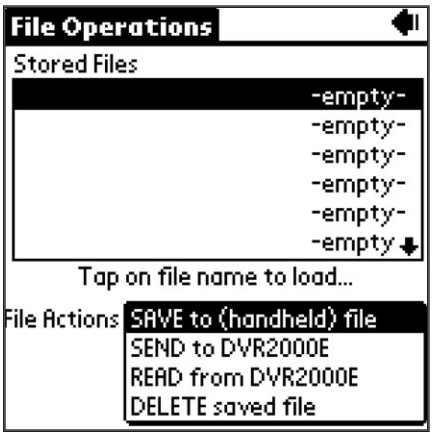

Figure 6-13. File Operations Screen

More information about the File Operations Screen is provided in the software File Operations Screen subsection.

CAUTION

Do not disconnect the communications cable while the DVR2000E and handheld are communicating.

NOTE

The Save to DVR button of the main screen, system status screen, and all of the settings group screens, is not always present. See Figure 6-14. It is displayed only in On-Line mode when settings have been changed but not saved to the DVR2000E. If the software is exited (either by turning off the handheld or switching to another application) without tapping the Save to DVR button, setting changes are not saved in the DVR2000E and may be erased if the DVR2000E loses operating power.

MAIN SCREEN

The software Main Screen of Figure 6-14 is the gateway to other software screens where settings changes can be made. The status of DVR2000E alarms, outputs and system parameters can be viewed, the software version level is stated, and contact information is provided.



Figure 6-14. Main Screen

Change Password

The password can be changed without having to re-enter the existing password. From the Main Screen, tap the Menu silk screen button or the title bar, “MARATHON DVR2000E.” The Change Password Dialog Box Screen (Figure 6-15) appears. Tapping “Change Password” displays the Enter NEW Password Screen (Figure 6-16). “Cancel” returns you to the Main Screen. Enter the new password and tap “OK.” The New Password Is Screen (Figure 6-17) appears indicating the clear-text password that was accepted. Remember the new password. If forgotten, the software will have to be reinstalled. Tapping “OK” returns you to the Main Screen.



Figure 6-15.Change Password Dialog Box Screen



Figure 6-16.Enter New Password Screen



Figure 6-17.New Password Is Screen

Navigating Through the Setting Groups

DVR2000E settings are divided into the seven groups/screens listed below. Each setting group/screen is accessed from the main screen.

- Configuration
- Settings
- Control
- Limiter
- AVR/FCR Gain
- Protection
- Var/PF Gain

A group of settings is accessed by tapping the group name listed on the main screen. A summary of the individual settings available at each screen is provided in Table 6-1.

Table 6-1. Settings Group Summary

Configuration Screen Sensing Mode Rated Sensing Voltage Generator PT Ratio Generator CT Ratio Fine Voltage Adj. Band	AVR/FCR Gain Screen Stability Range AVR Kp AVR Ki AVR Kd AVR Kg FCR Kg
Settings Screen Voltage Setpoint (AVR) Field Current Setpoint (FCR) Var Setpoint PF Setpoint	Protection Screen OEL Shutdown Time Delay Generator Overvoltage Level Field Overvoltage Level LOS Time Delay
Control Screen Soft Start Time Underfrequency Kneepoint Volts/Hertz Slope Droop Setpoint Eng. Unload Activation Freq. Eng. Unload Droop Pct. Eng. Unload Droop Time Eng. Unload Activation Rate	Var/PF Gain Screen Var Ki Var Kg PF Ki PF Kg
	Limiter Screen Overexcitation Limiter OEL Ki OEL Kg

Changing Settings

When a setting screen is selected and displayed, the description for each setting is listed in the Item column. The value for each setting is listed in the Value column. And the range for the highlighted setting is listed in the Settings Range box.

To change a setting, highlight the desired setting by tapping it. Ensure that the cursor is on the Change to: line and enter the new value in the Graffiti® writing area of the handheld. In the example of Figure 6-18 (Setting Change – Part 1 Screen), the Control screen Soft Start Time setting of 20 seconds is being replaced with a new setting of 50 seconds. Once the new value is entered in the Change to: line, the Update button is tapped to send the setting to the DVR2000E. When the handheld confirms the DVR2000E setting change, the handheld emits a two-tone beep, the new setting is displayed in the Value column, and the Save to DVR button appears in the lower, right-hand corner of the screen. See Figure 6-19, Setting Change – Part 2 Screen.



Figure 6-18. Settings Change - Part 1 Screen

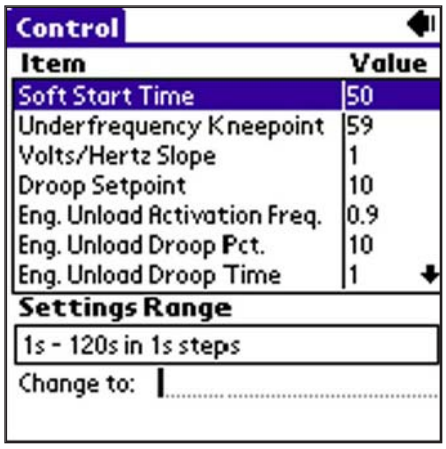

Figure 6-19.Setting Change – Part 2 Screen

Multiple changes can be made before saving the DVR2000E settings. Settings are saved by tapping the Save to DVR button on any of the screens that display the button.

Alarm and Contact Input Status

The Alarm/Contact Status Screen (Figure 6-20) is accessed from the software Main Screen (Figure 6-14). Tap the down arrow (▾) on the Other Pages: line and then select Alarm/Contact Status from the drop-down menu. Figure 6-21 (Reading Data Screen) shows how the screen will look while the Palm is polling the DVR2000E for data.

Figure 6-20 (Alarm/Contact Status Screen) shows how the screen appears after all polling is complete. The screen displays the status of the DVR2000E front panel LEDs. An alarm condition is indicated by a checked box (☒). The screen also indicates the position of the DVR2000E 52 LM, and 52 JK contact inputs. To refresh the status of the Alarm/Contact Status indicators, tap the Update button. To return to the Main Screen, tap the Back icon ◂).

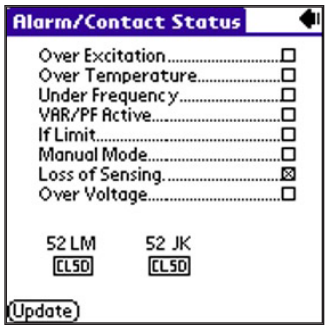

Figure 6-20.Alarm/contact Status Screen

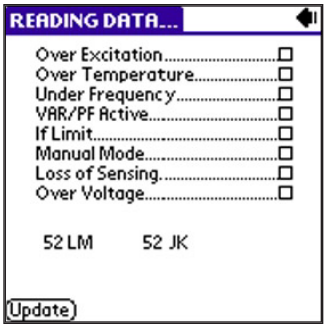

Figure 6-21.Reading Data Screen

System Status

The System Status Without Operating Mode Screen shown in Figure 6-22 is accessed from the Main Screen (Figure 6-14) by tapping the arrow on the Other Pages: line and then tapping System Status. The System Status Screen displays the current mode setting.

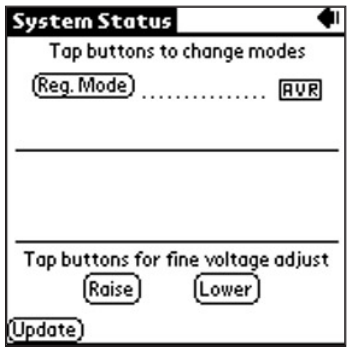

Figure 6-22. System Status Without Operating Mode Screen

Regulation Mode Button

Tapping the Reg. Mode button toggles between Field Current Regulation (FCR) mode and Automatic Voltage Regulation (AVR) mode.

Operating Mode Buttons

If the Var/PF option is installed, the Systems Status Screen may be different than that of Figure 6-22. This is illustrated in Figure 6-23, System Status With Operating Mode Screen. The Operating Mode segment of the System Status Screen (Figure 6-23) has three buttons labeled OFF, PF and VAR. A box around the Operating Mode's OFF, PF and VAR buttons indicates which mode is selected. A checked box below the buttons indicate which of the three modes the DVR2000E is currently operating in. The figure also shows that the selected operating mode is VAR while the DVR2000E is operating in OFF (AVR mode). Tapping the PF button places the DVR2000E in the power factor operating mode and causes a checked box (☒) to appear below the PF button. Tapping the VAR button places the DVR2000E(C) in the VAR operating mode and causes a checked box to appear below the VAR button. Tapping the OFF button disables both power factor and var regulation and places a checked box below the OFF button. The example of Figure 6-23 shows that power factor and var regulation are disabled.

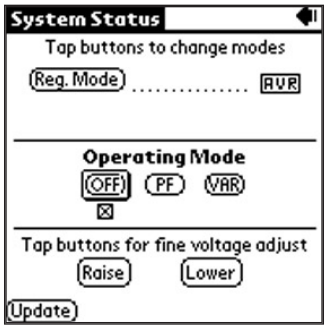

Figure 6-23. System Status With Operating Mode Screen

Operation of the Operating Mode controls is determined by the status of the contacts connected across the DVR2000E(C) Var/PF Control terminals (52J, 52K). When these contacts are open, the Operating Status controls are enabled. Closing the contacts at terminals 52J and 52K disables the Operating Status controls and interrupts regulation of vars or power factor until the contacts are opened again.

If a setting change is attempted and the requested feature or capability is not installed, then This command is not available message will be displayed after tapping the Update button. Figure 6-24, Command Not Available Screen illustrates this event. Tap OK to return to the previous screen.



Figure 6-24. Command Not Available Screen

Fine Adjust Buttons

Fine adjustments to the operating setpoint are made by tapping the Raise and Lower buttons of the System Status Without Operating Mode Screen (Figure 6-22). (The fine adjustment through the front panel push buttons only controls the voltage setpoint.) An arrow serves as a reminder of which button was last tapped. In AVR mode, a single tap of the Raise or Lower buttons increments or decrements the generator voltage by 0.1 volts and the range of which is constrained by the Generator Rated Voltage and the Generator Voltage Adjust Band settings. For

SECTION 7 • MAINTENANCE AND TROUBLE-SHOOTING

PREVENTATIVE MAINTENANCE

The only preventive maintenance required on the DVR2000E is to periodically check that the connections between the DVR2000E and the system are clean and tight. DVR2000E units are manufactured using state-of-the-art, surface-mount technology. As such, Katolight recommends that no repair procedures be attempted by anyone other than Katoligh personnel.

TROUBLESHOOTING

If you do not get the results that you expect from the DVR2000E, first check the programmable settings for the appropriate function. Use the following troubleshooting procedures when difficulties are encountered in the operation of your excitation system.

Generator Voltage Does Not Build

Step 1. Verify that all wiring is properly connected. Refer to Figures 4-6 through 4-10.

If wiring is improperly connected or loose, reconnect wiring properly.

If wiring connections are correct, proceed to Step 2.

Step 2. Verify that the generator is spinning at rated speed.

If the generator is not up to rated speed, increase generator speed to the rated value.

If the generator is spinning at rated speed, proceed to Step 3.

Step 3. Check for correct input power to the DVR2000E. Refer to Section 1, General Information, Specifications for input power requirements.

If voltage is not present, refer to the generator manual for repair procedures.

If voltage is present, proceed to Step 4.

Step 4. Verify that the fuse is not open.

Replace any open fuse.

If no fuses are open, proceed to Step 4.

Step 5. Verify that the front panel OVEREXCITATION SHUTDOWN indicator is not lit.

If the front panel OVEREXCITATION SHUTDOWN indicator (field voltage) is lit, check the generator and/or load conditions. Interrupt input power or shut down the generator for a minimum of one minute.

If the front panel OVEREXCITATION SHUTDOWN indicator is not lit, proceed to Step 6.

Step 6. Verify that the front panel OVEREXCITATION LIMITING indicator is not lit.

If the front panel OVEREXCITATION LIMITING indicator is lit, check the generator and load conditions. Also check the field current limit setpoint for the correct level. Interrupt input power or shut down the generator for a minimum of 1 minute.

If the front panel OVEREXCITATION LIMITING indicator is not lit, proceed to Step 7.

Step 7. Verify that the DVR2000E soft start settings are correct. Too long of a soft start setting may give the appearance of no buildup.



Figure 6-27. Numeric Settings Screen

SOFTWARE FILE OPERATIONS SCREEN

The File Operations Screen (Figure 6-13) displays a list of 10 user-created settings files and one factory-default settings file. When less than 10 user-created settings files exist, placeholders labeled "– empty –" occupy unused locations in the list. Tapping the name of a user-created file or the default settings file loads the file settings into software.

A drop-down menu is accessed by tapping the down arrow (▾) on the File Actions line. Selections from the drop-down menu enable you to create a settings file, send a settings file to the DVR2000E, retrieve settings from the DVR2000E and delete user-created settings files from the file list on the File Operations Screen.

Creating a Settings File

A settings file can be created with software in either On-Line or Off-Line mode. In On-Line mode, the existing DVR2000E settings can be downloaded from the DVR2000E and then modified to create a settings file. The factory-default settings or a user-created settings file can be retrieved and modified in either On-Line mode or Off-Line mode to create a new settings file. When editing of the settings is complete, the following steps are used to save the settings file with a unique name.

1. On the software main screen, tap the down arrow (▾) on the Other Pages: line.
2. Select File Operations from the drop-down menu and then tap the Open… button in the "Which Settings?" dialog box to access the File Operations Screen.
3. Tap the down arrow (▾) on the File Actions: line of the File Operations Screen.
4. Select SAVE to (handheld) file from the drop-down menu.
5. Use the handheld Graffiti® writing area to enter a name for the file. Up to 50 alphanumeric characters can be used. Note that no more than approximately 13 characters are shown in the Save As: field when entering a file name. Upon saving, a date/time stamp will be added to the end of the filename.

Sending a Settings File to the DVR2000E

An existing settings file can be sent to the DVR2000E by using the following procedure.

1. On the software main screen, tap the down arrow (▾) on the Other Pages: line.
2. Select File Operations from the drop-down menu and then tap the Open… button in the Which Settings? dialog box to access the File Operations Screen.
3. Select the desired settings file from the list on the File Operations Screen to load the settings into software.
4. Tap the OK button to acknowledge that the settings were loaded.
5. Repeat Steps 1 and 2 to access the File Operations Screen.
6. Tap the down arrow (▾) on the File Actions: line and select SEND to DVR2000E from the drop-down menu.
7. Ensure that the proper data cable is connected between the DVR2000E and the handheld.
8. Tap the OK button in the Connect Cable dialog box to send the file.
9. Tap the OK button to acknowledge that the settings were sent to the DVR-2000E.
10. To save the settings in DVR2000E memory, tap the Save to DVR2000E button which is accessible from

any of the software screens.
11. Tap OK to acknowledge that the settings were saved to DVR2000E memory.

Reading Settings from the DVR2000E

DVR2000E settings are read into the software on your handheld by performing the following steps.

1. On the software Main Screen, tap the down arrow (▾) on the Other Pages: line.
2. Select File Operations from the drop-down menu and then tap the Open button in the Which Settings? dialog box to access the File Operations Screen.
3. Tap the down arrow (▾) on the File Actions: line and then select READ from DVR2000E from the drop-down menu.
4. Ensure that the proper data cable is connected between the DVR2000E and the handheld.
5. Tap the OK button in the Connect Cable dialog box to read the DVR2000E settings into the software.
6. Once the settings are read, tap the OK button to acknowledge that the DVR2000E settings were read into the software.

Deleting User-Created Settings Files

Perform the following steps to delete a user-created settings file.

1. On the software Main Screen, tap the down arrow (▾) on the Other Pages: line.
2. Select File Operations from the drop-down menu and then tap the Open button in the Which Settings? dialog box to access the File Operations Screen.
3. Tap the down arrow (▾) on the File Actions: line and then select Delete saved file.
4. Tap the name of the settings file that to be deleted.
5. Tap the Delete button to remove the selected settings file from the handheld.

SECTION 7 • MAINTENANCE AND TROUBLE-SHOOTING

TABLE OF CONTENTS

SECTION 7 • MAINTENANCE AND TROUBLE-SHOOTING....86

PREVENTATIVE MAINTENANCE....86
TROUBLESHOOTING....86
Generator Voltage Does Not Build....86
Low Generator Output Voltage....87
High Generator Output Voltage....87
Poor Voltage Regulation....88
Generator Output Unstable (Hunting)....88
OVEREXCITATION SHUTDOWN Indicator Is Annunciating....89
LOSS OF GENERATOR SENSING Indicator Is Annunciating....89
OVEREXCITATION LIMITING Indicator Is Annunciating....89
UNDERFREQUENCY ACTIVE Indicator Is Annunciating....90
No Droop....90

Section S7

SECTION 7 • MAINTENANCE AND TROUBLE-SHOOTING

PREVENTATIVE MAINTENANCE

The only preventive maintenance required on the DVR2000E is to periodically check that the connections between the DVR2000E and the system are clean and tight. DVR2000E units are manufactured using state-of-the-art, surface-mount technology. As such, Katolight recommends that no repair procedures be attempted by anyone other than Katolight personnel.

TROUBLESHOOTING

If you do not get the results that you expect from the DVR2000E, first check the programmable settings for the appropriate function. Use the following troubleshooting procedures when difficulties are encountered in the operation of your excitation system.

Generator Voltage Does Not Build

Step 1. Verify that all wiring is properly connected. Refer to Figures 4-6 through 4-10.

If wiring is improperly connected or loose, reconnect wiring properly.

If wiring connections are correct, proceed to Step 2.

Step 2. Verify that the generator is spinning at rated speed.

If the generator is not up to rated speed, increase generator speed to the rated value.

If the generator is spinning at rated speed, proceed to Step 3.

Step 3. Check for correct input power to the DVR2000E. Refer to Section 1, General Information, Specifications for input power requirements.

If voltage is not present, refer to the generator manual for repair procedures.

If voltage is present, proceed to Step 4.

Step 4. Verify that the fuse is not open.

Replace any open fuse.

If no fuses are open, proceed to Step 4.

Step 5. Verify that the front panel OVEREXCITATION SHUTDOWN indicator is not lit.

If the front panel OVEREXCITATION SHUTDOWN indicator (field voltage) is lit, check the generator and/or load conditions. Interrupt input power or shut down the generator for a minimum of one minute.

If the front panel OVEREXCITATION SHUTDOWN indicator is not lit, proceed to Step 6.

Step 6. Verify that the front panel OVEREXCITATION LIMITING indicator is not lit.

If the front panel OVEREXCITATION LIMITING indicator is lit, check the generator and load conditions. Also check the field current limit setpoint for the correct level. Interrupt input power or shut down the generator for a minimum of 1 minute.

If the front panel OVEREXCITATION LIMITING indicator is not lit, proceed to Step 7.

Step 7. Verify that the DVR2000E soft start settings are correct. Too long of a soft start setting may give the appearance of no buildup.

If the soft start settings are incorrect, adjust the settings.

If the soft start settings have no effect, proceed to Step 8.

Step 8. Replace the DVR2000E unit.

If replacing the DVR2000E unit does not correct the malfunction, then the generator is defective. Consult with the generator manufacturer.

Low Generator Output Voltage

Step 1. Verify that the voltage adjustment is not set too low.

If the voltage adjustment is too low, adjust it to the correct setpoint.

If the voltage adjustment is correct, proceed to Step 2.

Step 2. Verify that the underfrequency knee setpoint is not greater than the generator frequency.

If the underfrequency setpoint is too high, adjust the setpoint below the rated generator frequency.

If the underfrequency setpoint is correct, proceed to Step 3.

Step 3. Verify that the generator is spinning at rated speed.

If the generator is not up to rated speed, increase the generator speed to the rated level.

If the generator is spinning at rated speed, proceed to Step 4.

Step 4. Check for correct input power to the DVR2000E. Refer to Section 1 (General Information, Specifications) for input power requirements.

If the DVR2000E input voltage is low, refer to the PMG manual for PMG.

If the voltage is at the required level, proceed to Step 5.

Step 5. Verify that the sensing potential transformer (if used) has the correct turns ratio and is operating correctly.

If the turns ratio of the sensing potential transformer is incorrect, replace the sensing potential transformer.

If the sensing potential transformer is operating correctly, proceed to Step 6.

Step 6. Verify that the front panel OVEREXCITATION LIMITING indicator is not lit.

If the front panel OVEREXCITATION LIMITING indicator is lit, check the generator and/or load conditions. Also check the field-current limit setpoint for the correct level. Interrupt input power or shut down the generator for a minimum of one minute.

If the front panel OVEREXCITATION LIMITING indicator is not lit, proceed to Step 7.

Step 7. Low generator output voltage may occur when operating in droop mode with an inductive load.

If the low voltage condition is not caused by the droop function, proceed to Step 8.

Step 8. Replace the DVR2000E unit.

High Generator Output Voltage

Step 1. Verify that the voltage adjustment is not set too high.

If the voltage adjustment is too high, adjust it to the correct setpoint.

If the voltage adjustment is correct, proceed to Step 2.

Step 2. Verify that the sensing potential transformer (if used) has the correct turns ratio.

If the turns ratio of the sensing potential transformer is incorrect, replace the sensing potential transformer with the correct one.

If the sensing potential transformer is correct, proceed to Step 3.

Step 3. High generator output voltage may occur when operating in droop mode with a capacitive load.

If the high voltage condition is not caused by the droop function, proceed to Step 4.

Step 4. Replace the DVR2000E unit.

Poor Voltage Regulation

Step 1. Verify that the case of the DVR2000E is properly grounded.

If the DVR2000E is not properly grounded, connect a dedicated ground wire to the quarter-inch fast-on connector labeled GND on the rear of the DVR2000E case.

If the DVR2000E is properly grounded, proceed to Step 2.

Step 2. Check for grounded field leads.

If the field leads are grounded, isolate them from ground.

If the field leads are not grounded, proceed to Step 3.

Step 3. Check for grounded PMG leads.

If the PMG leads are grounded, isolate them from ground.

If the PMG leads are not grounded, proceed to Step 4.

Step 4. Verify that the generator frequency is not dropping below the DVR2000E underfrequency setpoint when load is applied to the generator.

If the generator frequency is dropping below the underfrequency setpoint, reduce the setpoint if possible. Also check the prime mover and generator for proper sizing in relation to the applied load.

If poor regulation is not related to DVR2000E underfrequency operation, proceed to Step 5.

Step 5. Verify that regulation is not being affected by normal droop operation.

If droop operation is not affecting regulation, proceed to Step 6.

Step 6. Replace the DVR unit.

Generator Output Unstable (Hunting)

Step 1. Verify that the governor for the prime mover is operating properly.

If the governor is not operating properly, troubleshoot using the manufacturer's suggested procedures.

If the governor is operating properly, proceed to Step 2.

Step 2. Verify that the sensing and input power leads are connected securely.

If the sensing or input power leads are not connected securely, tighten the connections.

If the sensing or input power lead connections are secure, proceed to Step 3.

Step 3. Verify that the DVR2000E Stability Range is set to the proper range.

If the Stability Range setting is incorrect, reset the Stability Range.

If the Stability Range setting is correct, proceed to Step 4.

Step 4. Verify that the Stability Level is properly set.

If the Stability Level is not properly set, reset the Stability Level.

OVEREXCITATION SHUTDOWN Indicator Is Annunciating

Step 1. Verify that the field overvoltage setpoint is adjusted properly.

If not properly adjusted, readjust the field overvoltage setpoint.

If properly adjusted, proceed to Step 2.

Step 2. Check for generator overloading.

If the generator is operating with a larger than rated load, shed load.

If the generator is operating with a rated or less than rated load, proceed to Step 3.

Step 3. Replace the DVR2000E.

If replacing the DVR2000E does not correct the malfunction, proceed to Step 4.

Step 4. Refer to the generator manual. Generator is defective.

LOSS OF GENERATOR SENSING Indicator Is Annunciating

Step 1. Verify that the voltage sensing leads are properly connected.

If the sensing leads are not properly connected, correct the connections.

If the sensing lead connections are correct, proceed to Step 2.

Step 2. For single-phase sensing, verify that E2 and E3 are connected.

If E2 and E3 are not connected, connect them both to phase C sensing voltage.

If E2 and E3 are properly connected, proceed to Step 3.

Step 3. Verify that the sensing potential transformer (if used) has the correct turns ratio and is functioning properly.

If the sensing potential transformer has the wrong turns ratio or is malfunctioning, replace it.

If the sensing potential transformer is correct and functioning properly, proceed to Step 4.

Step 4. Verify that the generator output voltage is present on all phases.

If the generator is missing a phase, refer to the generator manual. Generator is defective.

If generator output voltage is balanced on all phases, proceed to Step 5.

Step 5 Replace the DVR2000E.

OVEREXCITATION LIMITING Indicator Is Annunciating

Step 1. Check for generator overloading.

If the generator is operating with a larger than rated load, shed load.

If the generator is operating with a rated or less than rated load, proceed to Step 2.

Step 2. Verify that the DVR2000E output (field) current limit is not set too low.

If the output current limit setpoint is too low, adjust for the proper setting.

If the output current limit is set properly, proceed to Step 3.

Step 3. Verify that the generator exciter field is not shorted.

If the generator exciter field is shorted, replace the generator.

If the generator exciter field is not shorted, proceed to Step 4.

Step 4. Replace the DVR2000E.

If replacing the DVR2000E does not correct the malfunction, proceed to Step 5.

Step 5. Refer to the generator manual. Generator is defective.

UNDERFREQUENCY ACTIVE Indicator Is Annunciating

Step 1. Verify that the generator is operating at rated speed.

If the generator is not operating at rated speed, adjust the generator speed.

If the generator is operating at the rated speed, proceed to Step 2.

Step 2. Verify that the underfrequency setpoint is correct.

If the underfrequency setpoint is incorrect, adjust it to the correct value.

No Droop

Step 1. Verify that the DVR2000E 52L/M contact input is open.

If the 52L/M contact input is not open, it must be opened to enable the droop function.

If the 52L/M contact input is open, proceed to Step 2.

Step 2. Verify that the DVR2000E 52J/K contact input (if present) is closed or the Var/PF function is disabled via the Windows® software. Var/PF operation must be disabled for droop operation. If Var/PF operation is disabled, proceed to Step 3.

Step 3. Verify that the DVR2000E droop setting is not adjusted to 0% droop.

If the droop setting is adjusted to 0% droop, increase the setpoint above 0%.

If the droop setting is adjusted to above 0%, proceed to Step 4.

Step 4. Check for an open in the circuit connected to DVR2000E CT1 and CT2.

If there is an open circuit, repair as necessary.

If there is no open circuit, proceed to Step 5.

Step 5. Verify that all connections are correct according to Figures 4-6 and 4-7.

If connections are incorrect, correct the problem.

If connections are correct, proceed to Step 6.

Step 6. Verify that the load being applied to the generator for droop testing is not purely resistive.

If only a resistive load is being applied to the generator, apply an inductive load and retest.

If the load being applied to the generator is inductive, proceed to Step 7.

Step 7. Verify that your DVR2000E is compatible with the current sensing transformer (5 A secondary) being used. For example, a current sensing transformer with a 1 ampere output rating would produce very little droop since your DVR2000E has a 5 ampere current transformer input.

If the current transformer input is incorrect, replace the current sensing transformer for compatibility.

If the current transformer input is correct, proceed to Step 8.

Step 8. If the above steps fail to correct the malfunction, replace the DVR2000E unit.

Phone: 507.625.7973

Fax: 507.625.2968

www.katolight.com

Printed in USA

DVR2000E_Manual_KL 3-12-04

KATOLIGHT CORPORATION

PUBLICATION NUMBER: 351-01057-00B
PUBLICATION DATE: FEB 2004

INSTRUCTION MANUAL

FOR

VOLTAGE REGULATOR

Models: K65-12B
K125-10B

KATO Engineering Inc.

P.O. Box 8447
Mankato, MN 56002-8447
(507) 625-4011
Fax (507) 345-2798
www.kato-eng.com

INTRODUCTION

This manual provides information concerning the operation and installation of the K65-12B and K125-10B Voltage Regulators. To accomplish this, the following is provided.

- Specifications
- Mounting Information
- Operation
- Maintenance

WARNING

TO AVOID PERSONAL INJURY OR EQUIPMENT DAMAGE, ONLY QUALIFIED PERSONNEL SHOULD PERFORM THE PROCEDURES PRESENTED IN THIS MANUAL.

CAUTION

MEGGERS AND HIGH POTENTIAL TEST EQUIPMENT SHOULD BE USED WITH EXTREME CARE. INCORRECT USE OF SUCH EQUIPMENT COULD DAMAGE COMPONENTS CONTAINED IN THE DEVICE.

First Printing: May 14, 2001

Printed in USA

It is not the intention of this manual to cover all details and variations in equipment, nor does this manual provide data for every possible contingency regarding installation or operation. The availability and design of all features and options are subject to modification without notice.

Revisions

Date	Level	Revised
02/01/02	A	Changed figure 2-2.1 to reflect new chassis ground terminal
02/20/02	B	Changed figure 2-2.1 and assorted text changes.
02/17/04	C	Added Figure 2-2-b; simple connection
02/17/04	D	Corrected Figure2-3

CONTENTS

SECTION 1 • GENERAL INFORMATION 1-1

GENERAL 1-1
SPECIFICATIONS 1-1

SECTION 2 • INSTALLATION 2-1

MOUNTING 2-1
CONNECTIONS 2-2
Terminal Descriptions 2-2

SECTION 3 • OPERATION 3-6

GENERAL 3-6
PRELIMINARY SET-UP 3-6
SYSTEM START-UP 3-6
ADJUSTMENTS 3-7
Field Flashing 3-7
Frequency Roll-Off Adjustment 3-7
Stability (STB) Adjustment 3-8
Voltage (VLT ADJ) Adjustment 3-8
Factory Voltage Adjust Range Calibration Adjustment 3-8
Parallel Droop (DRP) Compensation 3-8
OPTIONS 3-8
Remote Voltage Adjust 3-9
Excitation Disable 3-9
Var/PF Control 3-9
Manual Voltage Control 3-9
OPERATIONAL TEST 3-9

SECTION 4 • MAINTENANCE 4-1

PREVENTIVE MAINTENANCE 4-1
TROUBLESHOOTING 4-1

SECTION 1 • GENERAL INFORMATION

GENERAL

The K65-12B and K125-10B Voltage Regulators are contained in an encapsulated plastic case. The regulator controls the dc exciter field power of conventional, 50 or 60 hertz brushless generators.

Regulation is provided by sensing the generator output voltage, converting it to a dc signal and comparing the signal to a reference voltage signal. An error signal is developed and used to control the dc field power in order to maintain a constant generator output.

The regulator includes frequency compensation with selectable slope, inverse time overexcitation shutdown, solid-state build-up circuitry, single-phase or three-phase voltage sensing, single-phase or three-phase shunt, or permanent magnet power input, and parallel droop compensation, and an accessory input. The accessory input provides compatibility with accessories such as a var/power factor controller.

SPECIFICATIONS

Refer to Table 1-1 for the electrical specifications and to Table 1-2 for the physical specifications of the K65-12B and K125-10B.

Table 1-1. Electrical Specifications

Specifications	K65-12B	K125-10B
Output Power (with a 240 Vac Input):	12 Adc @ 65 Vdc maximum continuous. 25 Adc @ 125 Vdc forcing for 10 seconds.	10 Adc @ 125 Vdc Maximum Continous. 20 Adc @ 250 Vdc forcing for 10 seconds.
AC Input Power:	100 to 280Vac, single-phase 50 to 400 Hz, or 63 to 105 Vac; three-phase, 50 to 400Hz, , 1092 VA maximum continuous burden	180 to 280 Vac, single-phase or three-phase, 50 to 400 Hz, 1750 VA maximum continuous burden
AC Sensing Voltage:	90 to 140 Vac, 50/60 Hz; single- or three-phase.	90 to 140 Vac, 50/60 Hz; single- or three-phase.
External Voltage Adjust Rheostat:	10 kohm, 2 W, potentiometer	10 kohm, 2 W, potentiometer
Regulation Accuracy:	±0.5% Average responding	±0.5% Average responding
Voltage Drift:	±1% voltage variation for a 40°C (104°F) change.	±1% voltage variation for a 40°C (104°F) change.
Response Time:	< 4 milliseconds	< 4 milliseconds
Frequency Compensation:	1 or 2 V/Hz jumper selectable with knee adjustable from 45 Hz to 65 Hz.	1 or 2 V/Hz jumper selectable with knee adjustable from 45 Hz to 65 Hz.
EMI Suppression:	Internal filter	Internal filter
Voltage Build-Up:	Internal provisions for automatic voltage build-up from generator residual voltages as low as six Vac.	Internal provisions for automatic voltage build-up from generator residual voltages as low as six Vac.
Overexcitation Shutdown:	Overexcitation protection starts timing at 90 Vdc ±5% and takes the output to zero in greater than 30	Overexcitation protection starts timing at 180 Vdc ±5% and takes the output to zero

	seconds. The output can be 125 Vdc for greater than 10 seconds.	in greater than 30 seconds. The output can be 250 Vdc for greater than 10 seconds.
Droop	1 A or 5 A, <10 VA, Adjustable from 0 to 10% at rated input current, 0.8 power factor	1 A or 5 A, <10 VA, Adjustable from 0 to 10% at rated input current, 0.8 power factor
UL Recognized/CSA Certified	UL Recognized per Standard 508, UL File NO. E97035. CSA Certified per Standard CAN/CSA-C22.2 No. 14-95, CSA File No. LR 23131	UL Recognized per Standard 508, UL File NO. E97035. CSA Certified per Standard CAN/CSA-C22.2 No. 14-95, CSA File No. LR 23131

Table 1-2. Physical Specifications

	K65-12B and K125-10B
CE Conformity	Conforms to: Radiated Emissions..... EN50081-2 Radiated Immunity: Electric field..... EN61000-4-3 (10 V/m Conducted..... EN61000-4-6 (10 VRMS) Conducted Emissions..... EN50081-2 (EN55011, Class A) ESD Immunity..... EN50082-2 (4 KV contact, 8 KV air) EFT Immunity ..... EN50082-2 (2 KV coupling clamp) Magnetic Immunity ..... EN50082-2 (30ARMS, 50 Hz) Safety:..... EN61010-1 (When enclosed within a suitable steel enclosure attached to the generator)
Operating and Storage Temperature:	-40°C (-40°F) to +70°C (+158°F).
Shock:	Withstands up to 20 g in each of three mutually perpendicular axes.
Vibration:	Withstands the following accelerations at the stated frequency: 0.5 g; 18 to 2000 Hz
Weight:	Approximately 1.1 kg (2.5 lbs.)

SECTION 2 • INSTALLATION

MOUNTING

The regulator may be mounted in any position. Refer to the outline drawing (Figure 2-1) for overall dimensions. The regulator may be mounted directly on the generator set using UNF 1/4-20 or equivalent hardware. Select the proper hardware to withstand any expected shipping/transportation and operating conditions.

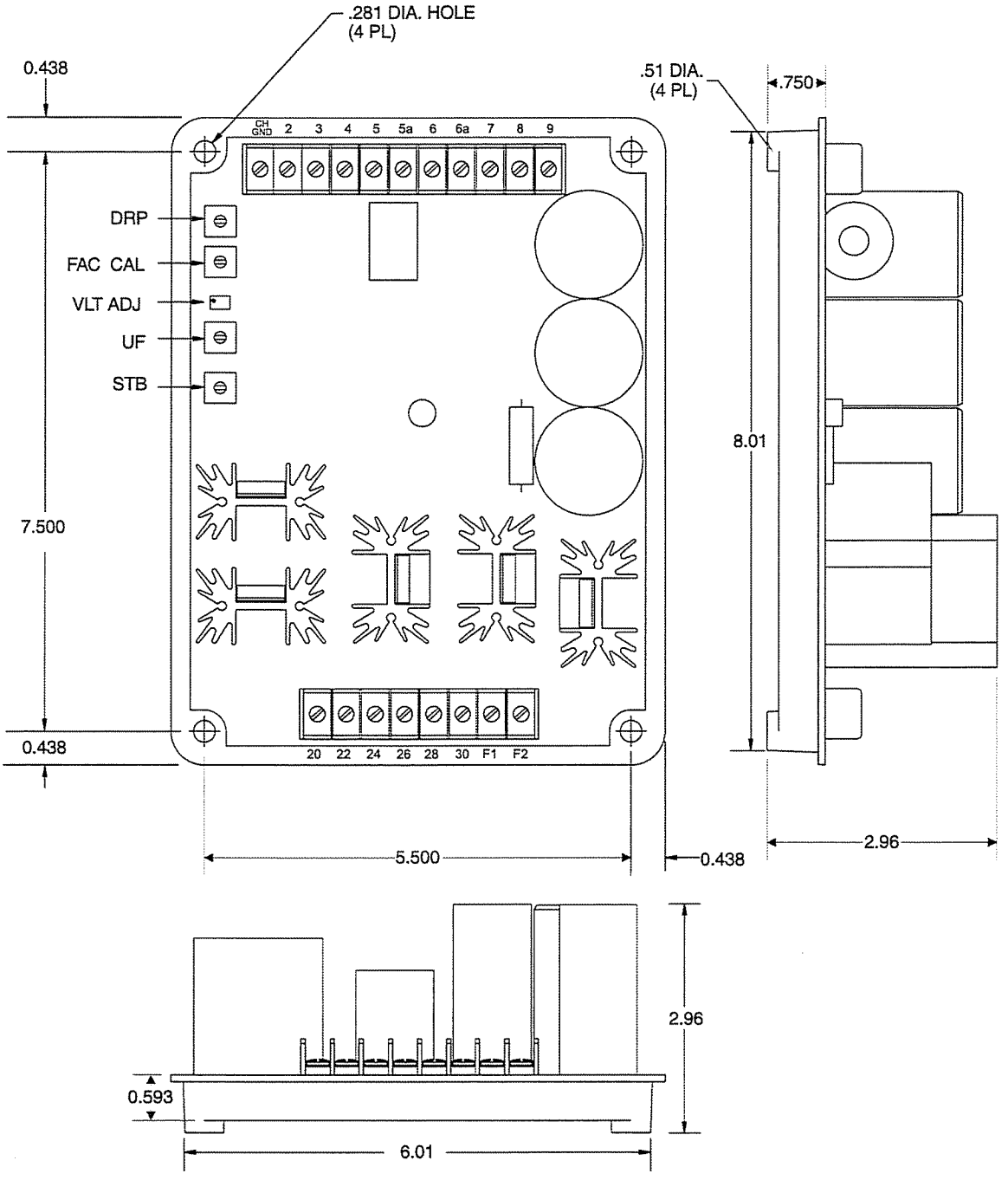

Figure 2-1. K65-12B and K125-10B Outline Drawing

CONNECTIONS

Before connecting the K65-12B and K125-10B into your system, review the terminal descriptions provided in Table 2-1, the internal adjustments provided in Table 2-2, and the typical interconnection diagrams shown in Figure 2-2

Table 2-1. Terminal Descriptions

Terminal Number	Terminal Description
Upper Terminal Strip	
CH GND	Chassis ground connection
2	Auxiliary Input from var Power Factor Controller
3	Auxiliary Input from var Power Factor Controller
4	Connect to 7 to use internal voltage adjust, no connection for external voltage adjust
5	1 Amp Current Transformer
5a	5 Amp Current Transformer
6	Current Transformer Common
6a	Common connection for selectable features
7	Connect Remote Adjust from 7 to 6a, connect to 4 for internal voltage adjust
8	Connect to 6a to select 1v/Hz underfrequency slope (Not 810-34334-00)
9	Connect to 6a to select 3 phase sensing
Lower Terminal Strip	
20	Phase C sensing input
22	Phase A sensing input
24	Phase B sensing input
26	3-phase power input
28	1-phase or 3-phase power input
30	1-phase or 3-phase power input
F1	Field +
F2	Field -

Table 2-2. Internal Adjustments

Adjustment	Adjustment Description
DRP	Voltage Droop Adjust
FAC CAL	FAC CAL is a factory voltage adjust range calibration. No customer adjustment is required.
VLT ADJ	Multi-turn Voltage Adjust
UF	Underfrequency Knee Adjust (Not 810-34334-00)
STB	Stability Adjust

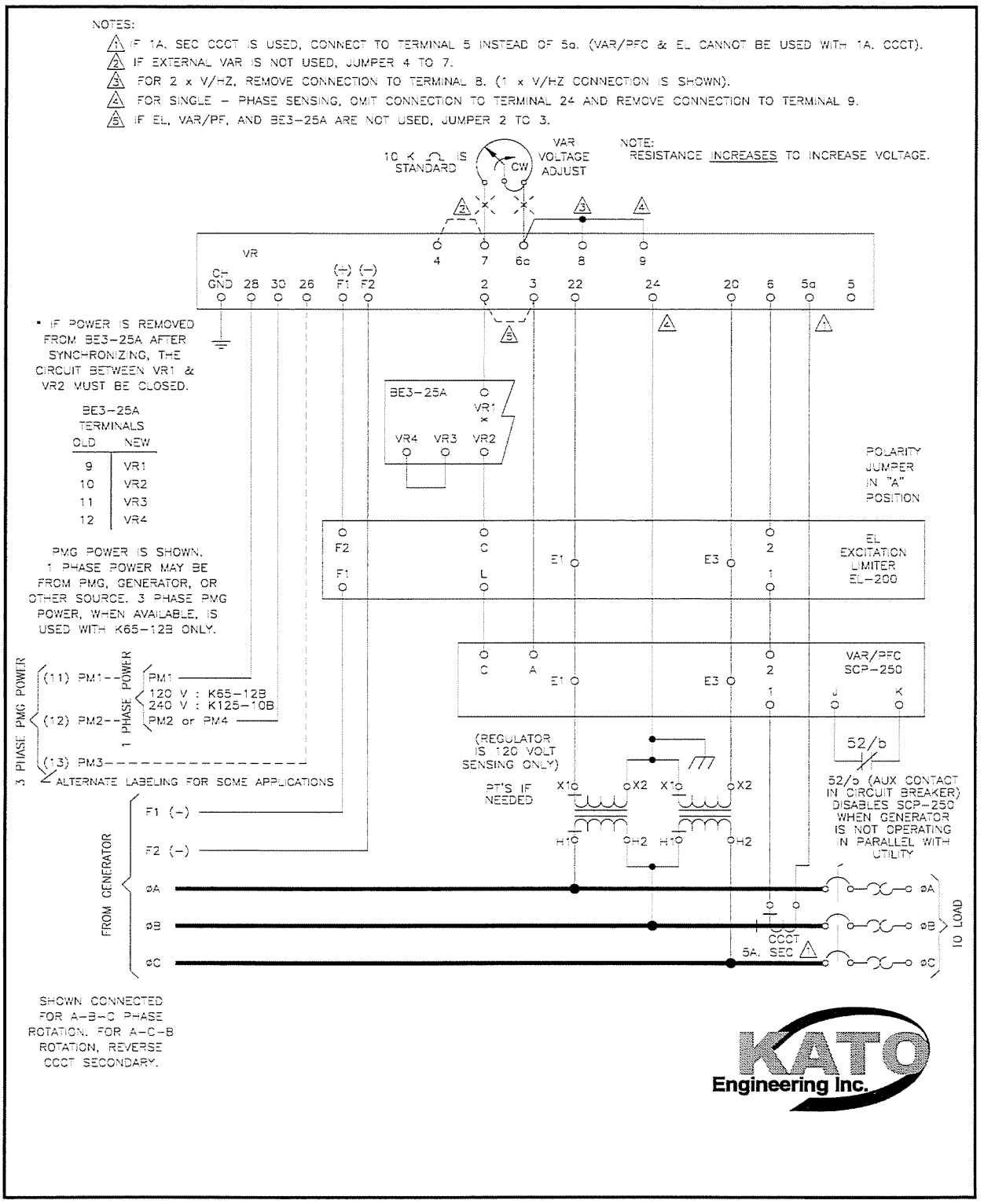

Figure 2-2-a Regulator Connections

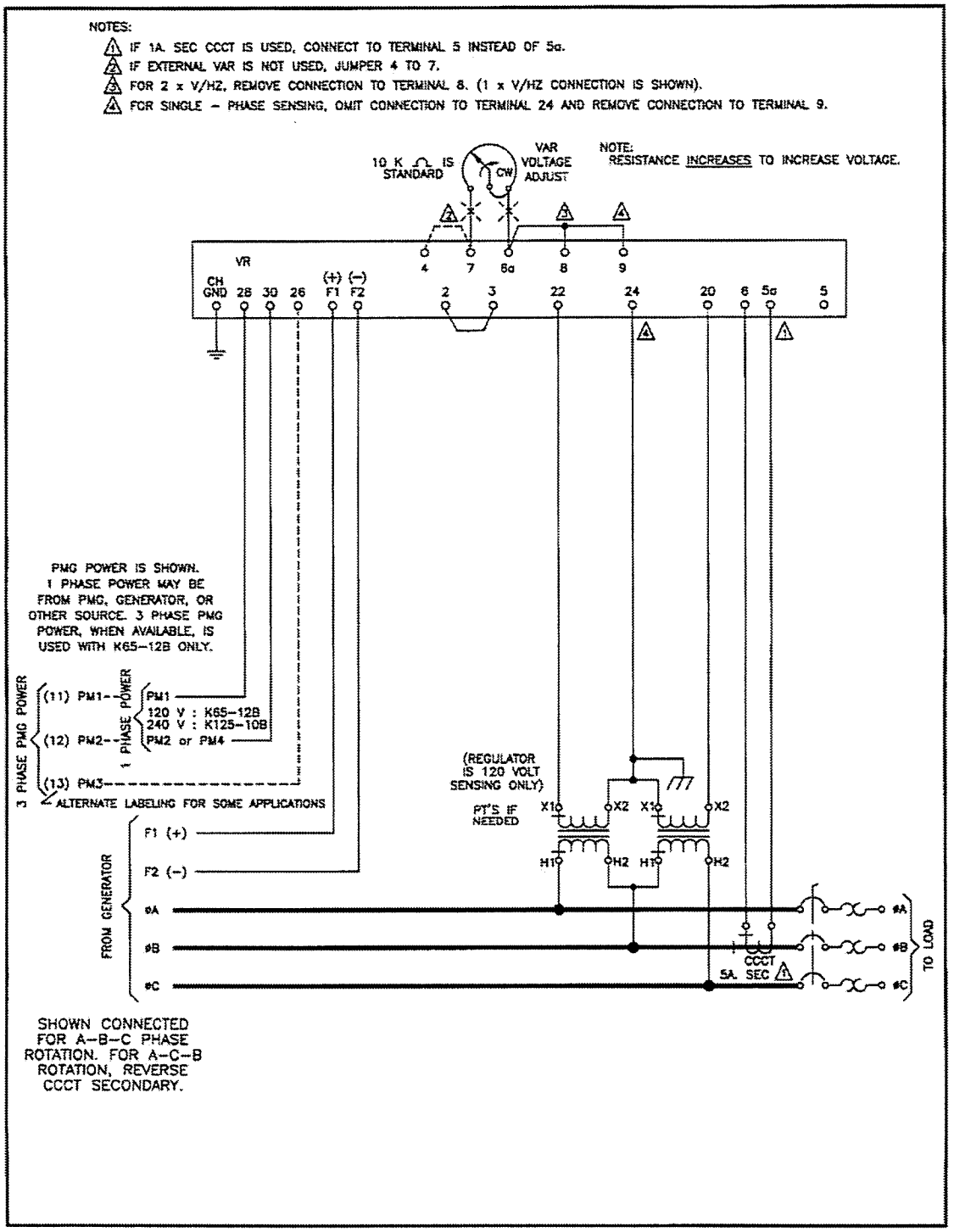

Figure 2-2-b Regulator Connections (Simple)

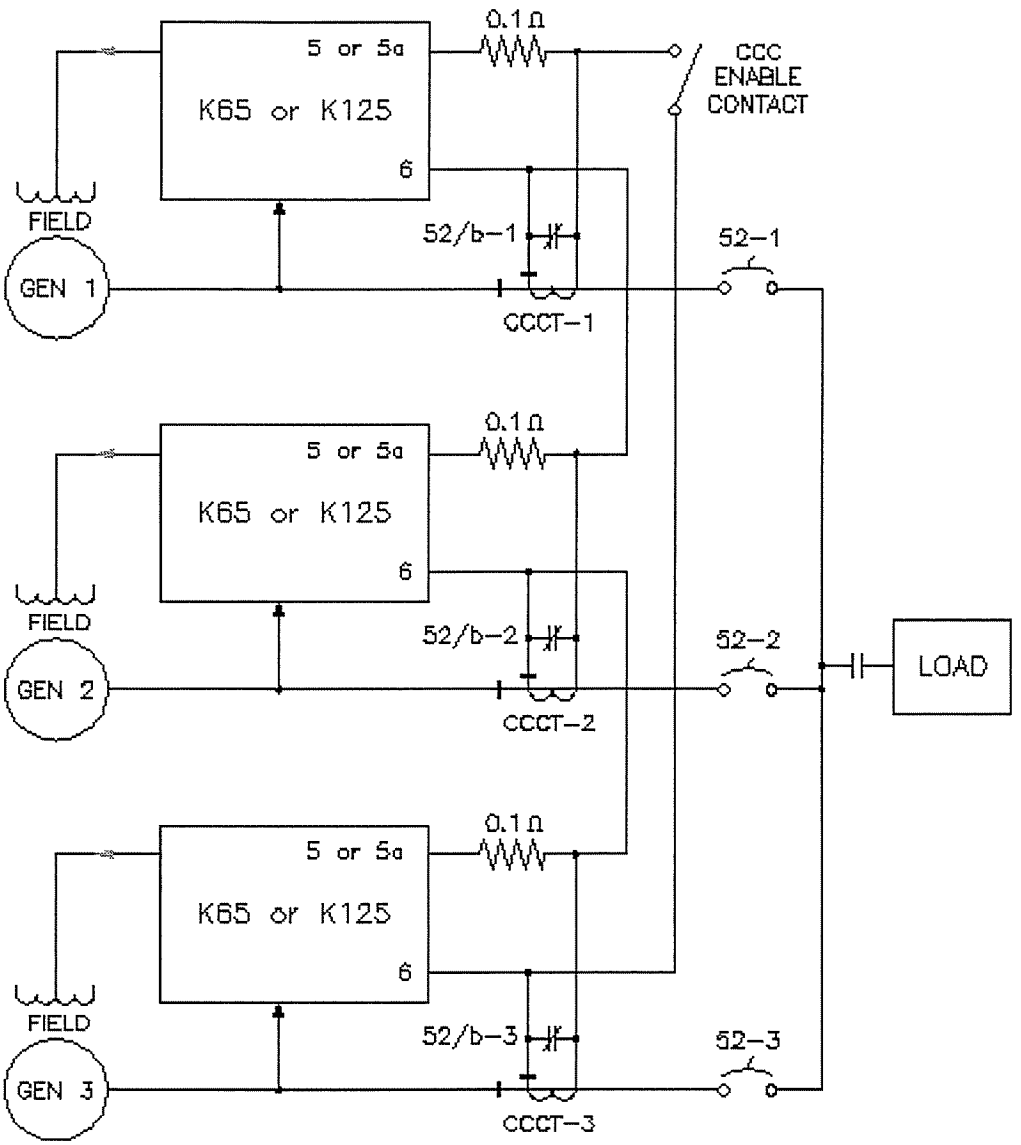

Figure 2-3. K65-12B & K125-10B Cross-Current Compensation

SECTION 3 • OPERATION

GENERAL

Table 3-1 provides system start-up procedures for the K65-12B and K125-10B Voltage Regulators. Symptoms of problems occurring during start-up that arise from incorrect regulator adjustment and certain generator system problems that resemble faulty regulation are included together with possible solutions. Simplifying the system by eliminating components, such as remote adjust potentiometers and other non-essential items can be helpful in the troubleshooting process. Adjustments, options, and an operational test are included in the paragraphs after the table.

PRELIMINARY SET-UP

To prevent damage to the regulator, ensure that the regulator has been installed and connected in accordance with Section 2 before proceeding with the system start-up.

SYSTEM START-UP

Refer to Table 3-1 for starting up the system.

Table 3-1. System Start-Up

Procedure	Symptom	Remedy
1. Perform the preliminary set-up.	N/A	N/A
2. Start prime mover and bring up to rated speed.	a. Voltage does not build-up.	a. Flash field. (Except with PMG) b. Remove power for 1 minute to allow the over excitation circuit to reset. c. Troubleshoot. See Section 4.
	b. Voltage builds up and then decays.	a. Troubleshoot. See Section 4.
3. Slowly adjust **VLT ADJ** or external voltage adjust rheostat until voltage reaches nominal.	a. Voltage does not build up to rated value.	a. Check generator output for shorted or excessive load. b. Troubleshoot. See Section 4.
	b. Voltage high and uncontrollable.	a. Troubleshoot. See Section 4.
4. Apply and remove load to check stability.	Generator response too slow or is hunting (oscillating).	a. Check generator output for shorted or excessive load. Adjust STB with no load applied. b. Check stability of governor system. c. Troubleshoot. See Section 4.

Katolight Service - Master Repair Manual - Page 1242

Procedure	Symptom	Remedy
5. Check regulation under normal operating conditions.	Poor regulation.	a. Check that prime mover is up to speed. b. Check that voltmeter is connected at the same point as the regulator sensing. c. Use an average sensing voltmeter (not a RMS sensing). d. Troubleshoot. See Section 4.
6. Reduce generator frequency. Generator output should decrease from this point.	Generator output voltage does not decrease at desired frequency.	a. Check that all wiring is in accordance with Section 2. b. Adjust UF control.

ADJUSTMENTS

For location of the adjustments referenced in the following paragraphs, refer to Figure 2-1.

Field Flashing (ONLY for units with NO PMG)

When the regulator is operated with the generator for the first time, the polarity of the residual magnetism may not be correct or of sufficient magnitude. If generator residual voltage is less than 6 Vac for the K65-12B or 12 Vac for the K125-10B at terminals 26 and 28, shut down the prime mover and proceed with the following steps:

CAUTION

Do not flash the field with the generator in motion. The regulator may be damaged.

(1) With the prime mover at rest, apply a dc source (ungrounded), of not more than 24 Vdc, to terminals **F1** (positive) and **F2** (negative) in series with a limiting resistor. Use one (1) ohm of resistance for each volt from the dc power source with a power rating of least one (1) watt per ohm.

EXAMPLE: If using a 24 Vdc source, use a 24-ohm, 24-watt resistor.

(2) Allow the field to be flashed for approximately ten seconds before removing the dc source.

(3) If voltage build-up does not occur after performing steps (1) and (2), verify the polarity of the dc source used in steps (1) and (2) and re-perform.

Frequency Roll-Off (Knee) Adjustment (Not on 810-34334-00)

The underfrequency knee can be set for 45 to 60 Hz operation as described in the following paragraphs.

(1) .Adjust the underfrequency potentiometer (UF) fully CCW.

(2) Set the generator to the desired frequency

(3) Adjust the Voltage Adjust (internal or external) for nominal generator voltage.

(4) Adjust the underfrequency potentiometer (UF) CW until the voltage begins to decrease.

(5) Adjust the underfrequency potentiometer (UF) CCW until the voltage just returns to the value set in Step 3.

(6) The underfrequency "knee" is now set just below the nominal operating frequency. Further rotation in the CCW direction will lower the frequency at which underfrequency compensation begins.

(7) Connecting a jumper from terminal 8 to terminal 6a will provide an underfrequency slope of 1 X V/Hz. No connection to terminal 8 will result in an underfrequency slope of 2 X V/Hz.

Stability (STB) Adjustment

An oscilloscope or other voltage-recording device should be used if an optimal stability setting is desired. **Adjust the stability setting with the generator at no load.** Good response can be obtained with the following procedure.

(1) Rotation of the **STB** control in the clockwise (CW) direction will slow response time.

(2) Rotation of the **STB** control in the counter-clockwise (CCW) direction will speed response time. If rotated too far CCW, the generator voltage may oscillate (hunt).

(3) Rotate the front panel **STB** control CCW until the system just begins to oscillate and then rotate CW just past the point where oscillation occurred.

Voltage (VLT ADJ) Adjustment

(1) Installation of a jumper across terminals 4 and **7** allows the internal **VLT ADJ** adjustment to vary the generator nominal voltage over the operating range.

(2) Remove the jumper between terminals **4** and **7** and connect a 10k ohm external voltage adjust potentiometer across terminals **6** and **7** to allow operation of the external voltage adjust potentiometer. The internal voltage adjustment should be set fully CW for proper operation of the external adjustment.

Factory Voltage Adjust Range Calibration Adjustment

CAUTION

The factory calibration (FAC CAL) adjustment is intended for use by factory technicians only. The following procedure can be used if the factory calibration has been disturbed.

(1) With the voltage regulator operating on a generator, adjust the calibration potentiometer fully ccw and the voltage adjust potentiometer fully cw. Adjust the calibration potentiometer cw until the generator voltage is 144 ± 1 Vac. Adjust the voltage adjust ccw and verify the generator voltage is less than 90 Vac. The unit is calibrated and the calibration potentiometer can be sealed.

Parallel Droop (DRP) Compensation

(1) Variable parallel droop compensation levels can be obtained by adjusting the droop potentiometer. CW rotation increases the amount of droop for a given condition.

OPTIONS

The K65-12B and the K125-10B may be equipped with the following options to enhance operational characteristics. Characteristics of these options are defined in the following paragraphs.

Remote Voltage Adjust

Connect a 10 k ohm potentiometer from terminals 6 to 7, remove the jumper from terminal 4 to 7 and adjust the internal voltage adjust potentiometer fully clock wise to allow operation of a remote voltage adjust.

Excitation Disable

This option provides for disabling of the excitation system by removal of power from the voltage regulator. A switch removing voltage from terminals 26, 28 and/or 30 will remove power.

Var/PF Control

This option allows the K65-12B and the K125-10B to either regulate the volt-amps reactive (var) or power factor while the generator is connected to an infinite or utility bus. The var/PF option (Model Number SCP250G-50 for 50-hertz operation or SCP250G-60 for 60-hertz operation) supplies a dc signal into the K65-12B & K125-10B terminals **2** and **3** to regulate to the SCP250 var or power factor setting.

Manual Voltage Control

This option provides a manual back-up channel for manually controlling the generator output during generator start-up and commissioning or in the unlikely event that the voltage regulator should fail. Manual voltage controller models MVC-300 (if exciter field current does not exceed 7 amps) or the MVC-112 are suitable for use with the either the K65-12B or the K125-10B.

OPERATIONAL TEST

To operationally test any K65-12B or the K125-10B, perform the following steps.

a. Connect the voltage regulator as shown by Figure 3-1 and apply 120 Vac.

b. Adjust the **VLT ADJ** control fully counterclockwise (CCW).

   RESULT: Observe that the lamp is OFF.

c. Adjust the front panel **VLT ADJ** control clockwise (CW).

   RESULT: Observe that the lamp is now ON.

d. Adjust the front panel **VLT ADJ** control until the lamp just goes out.

Regulator operation is satisfactory if the above results are obtained. Stability, however, must be tested with the regulator operating while connected to the generator.

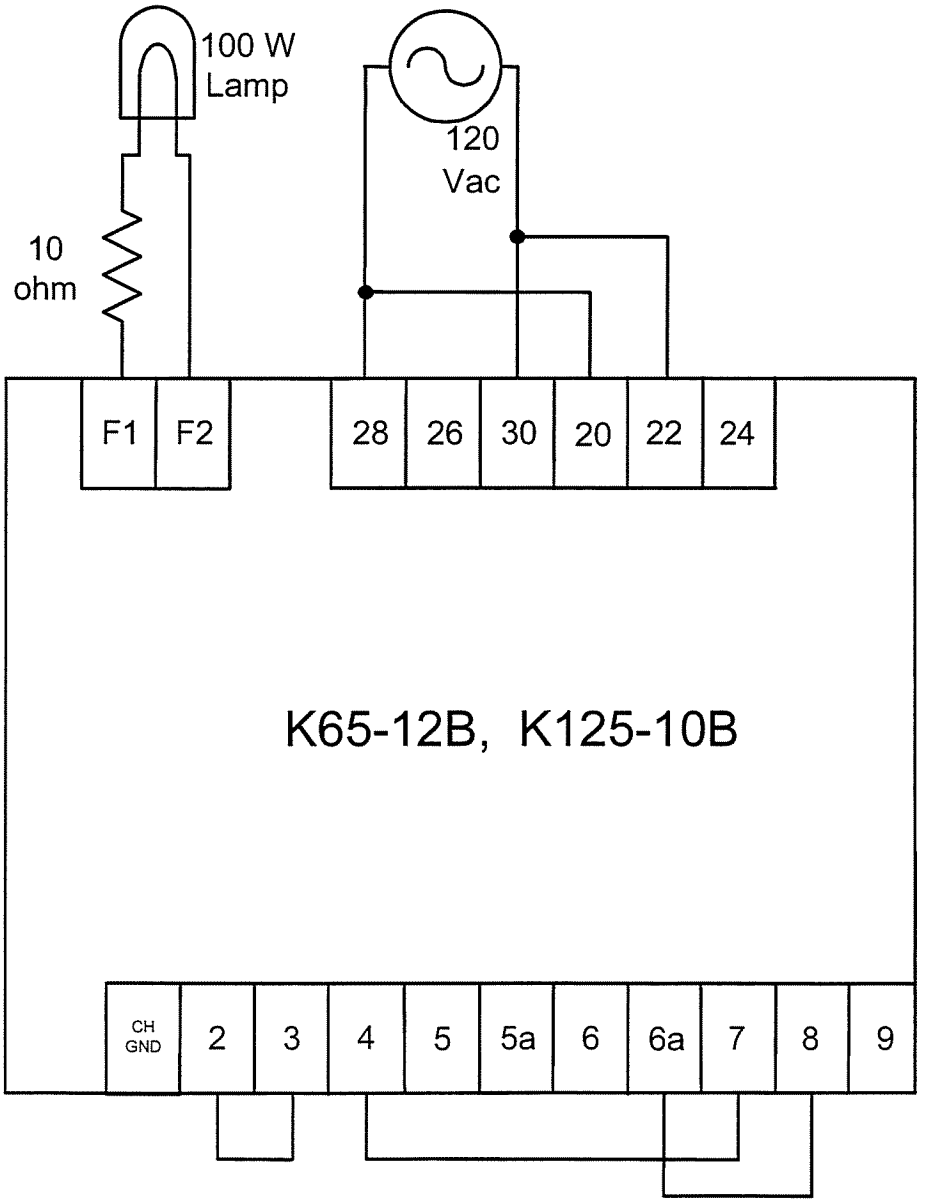

Figure 3-1. Operational Test Setup

SECTION 4 • MAINTENANCE

PREVENTIVE MAINTENANCE

A periodic inspection should be made of the voltage regulator to ensure that it is clean and free from accumulations of dust and moisture. Be sure that all connections are clean and tight.

TROUBLESHOOTING

In case of failure/defective operation of the unit, the following table (Table 4-1) is provided to aid in the determination of the cause and the possible solution. Simplifying the system by eliminating components, such as remote adjust potentiometers and other non-essential items can be helpful in the troubleshooting process.

Table 4-1. Troubleshooting

Symptom	Possible Cause	Remedy
Voltage does not build up.	a. No voltage or incorrect voltage to power input at terminals **26**, **28** or **30**.	a. Flash field. (except with PMG) b. Verify wiring. c. Check fuses supplying power. d. Replace regulator.
	b. Overexcitation circuit is shutting off regulator.	Shutdown regulator power for 1 minute then restart. Watch for high field voltage.
Voltage builds up and then decays.	a. Single or three phase jumper incorrect.	Verify single or three phase sensing is applied to 20, 22 and/or 24 and verify connection from upper terminal **6a** to **9** is correct.
	b. Defective regulator.	Replace regulator.
Voltage does not build up to rated value.	a. Single or three phase jumper incorrect.	Verify single or three phase sensing is applied to 20, 22 and/or 24 and verify connection from terminal **6a** to **9** is correct.
	b. Internal or external voltage adjustments are improperly set.	Adjust VLT ADJ control and/or external voltage adjust rheostat. Verify proper connection from 4 to 7.
	c. The regulator is operating on the underfrequency curve.	Verify the generator is rotating at the proper frequency. Verify proper adjustment of the underfrequency pot.
	d. Faulty regulator.	Replace regulator.
	e. Terminals 2 and 3 are not jumpered and there is no device connected to these terminals.	a. Jumper terminals 2 and 3. b. Connect var/PF controller or other device to terminals 2 and 3.
	f. Jumpers are set for single-phase sensing and three - phase voltage is applied.	Install jumpers between terminals 6a and 9.

Katolight Service - Master Repair Manual - Page 1247

Symptom	Possible Cause	Remedy
Voltage does not build up to rated value. (continued)	g. Voltage adjust pot not in use and terminals 4 and 7 are not jumpered.	Install jumper.
Voltage high and uncontrollable.	a. No sensing input.	Verify wiring.
	b. Single or three phase jumper incorrect.	Verify whether single or three phase sensing is applied to 20, 22 and/or 24 and verify connection from terminal **6a** to **9** is correct.
	c. Faulty regulator.	Replace regulator.
	d. Voltage adjust pot in use and terminals 4 and 7 are still jumpered.	Remove jumper.
Generator response too slow or hunting.	a. Improper front panel **STB** adjustment.	Re-adjust front panel **STB** adjustment, as described in section 3.
	b. Improper governor setting.	Adjust governor.
	c. Faulty regulator.	Replace regulator.
Poor regulation.	a. Low prime mover speed.	Verify prime mover speed.
	b. Faulty regulator.	Replace regulator.
Improper droop.	a. CT input is reversed	Correct CT input connections.
a. Output increases based on the amount of current and the droop pot setting.	b. CT input improperly connected to the one ampere or five ampere input terminals, or is shorted out.	Correct CT input connections.
b. Too much or too little droop.	c. Sensing Input connected out of phase.	Correct sensing input connections.
c. Improper droop characteristics.		

KAVC63-4 Voltage Regulator

HIGHLIGHTS

- Integrated circuitry for compact size, simplicity, reliability
- Extremely rugged
- Exciter field current 4A continuous, 7 A forcing
- Regulation accuracy better than + 1.0% no load to full load
- Fast response
- EMI suppression
- CSA approved, File #LR23131
- UL Recognized, File #E97035

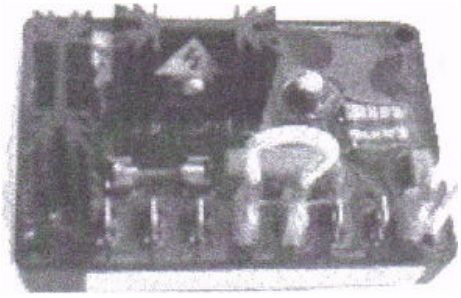

DESCRIPTION

The KAVC63-4 model of voltage regulator maintains generator line voltage on brushless generators from 5 KW to over 100 KW in size. The voltage regulator senses generator average voltage to maintain a precise regulation band within + 1%. This is accomplished by converting a 240 VAC single phase power input to a controlled DC signal to the generator's exciter field. The solid-state voltage build-up circuit will enable automatic generator line voltage build-up with a voltage input to the regulator of at least 6 VAC. Customer accessible stability, underfrequency and range adjusts enable fine tuning of the voltage regulator to the generator in use.

The over-excitation feature assists in protecting the voltage regulator during an over-excitation fault condition. During this mode, a shutdown signal is sent to the power stage, turning the regulator off. This feature will reset when the voltage input is removed (less the 6 VAC for a minimum of 2 seconds) to the regulator.

Figure 1 demonstrates the underfrequency characteristics of the voltage regulator during prime mover low speed conditions. Customer curve selection matches the voltage regulator to 50 or 60 Hz systems.

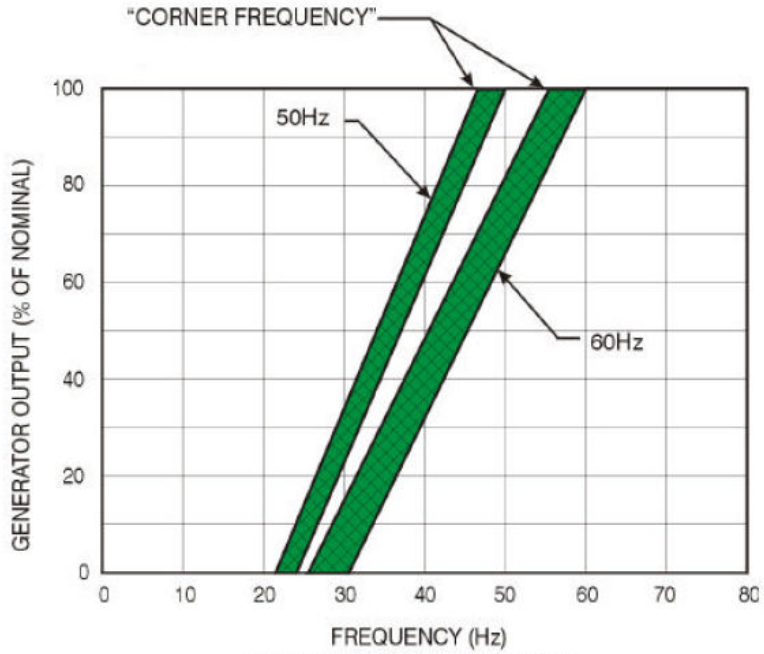

Figure 1 Frequency Compensation Characteristic

KAVC63-4 Voltage Regulator

KATOLIGHT CORPORATION

SPECIFICATIONS

DC Output				Exciter Field Resistance		Sensing/Power Input	
Max. Cont.		Max. Forcing 1 Min. (240Vac Input)		Min. OHMS@ 25° C	Max. OHMS	Single Phase Voltage Range	Burden
AMP	VOLT	AMP	VOLT				
4	63	7	100	15	100	171-264 Vac	500VA

- DC Output Power: 4 Adc at 63 Vdc maximum continuous, 7 Adc at 100 Vdc one minute forcing. (Forcing with 240 Vac nominal input.)
- Exciter Field DC Resistance: 15 ohms minimum; 100 ohms maximum.
- AC Sensing/Power Input: Operating range: 190-240 Vac single phase, 50/60 Hz ± 10%. Burden 500VA.
- Voltage Adjust Range: 171 - 264 Vac.
- Regulation Accuracy: Better than + 1.0% no load to full load.
- Response Time: Less than 1.5 cycles for + 5% change in sensing voltage.
- EMI Suppression: Internal electromagnetic interference filtering.
- Over-excitation Shutdown: Field voltage shuts down after time delay if exciter field voltage exceeds 100 Vdc + 5%. The time delay is inversely proportional to the magnitude of the detected overvoltage condition up to the 135 Vdc point, thus allowing nominal forcing for approximately 1 minute. Beyond 135 Vdc, the field voltage is removed within 2.0 seconds.
- Voltage Buildup: Internal provisions for automatic voltage buildup from generator residual voltages as low as 6 Vac.
- Terminations: 1/4" "Fast-On" Terminals.
- Power Dissipation: 15 Watts maximum.
- Operating Temperature: -40°C (-13°F) to +60° C (140°F).
- Storage Temperature: -40°C (-40°F) to +85°C
- Vibration: Withstands 1.2 Gs at 5 to 26 Hz; 0.036" double amplitude at 27 to 52 Hz; and 5 Gs at 53 to 500 Hz.
- Shock: Withstands up to 15 Gs in each of three mutually perpendicular axes.
- Weight: 8 oz. (0.22 kg) Net.

DIAGRAM

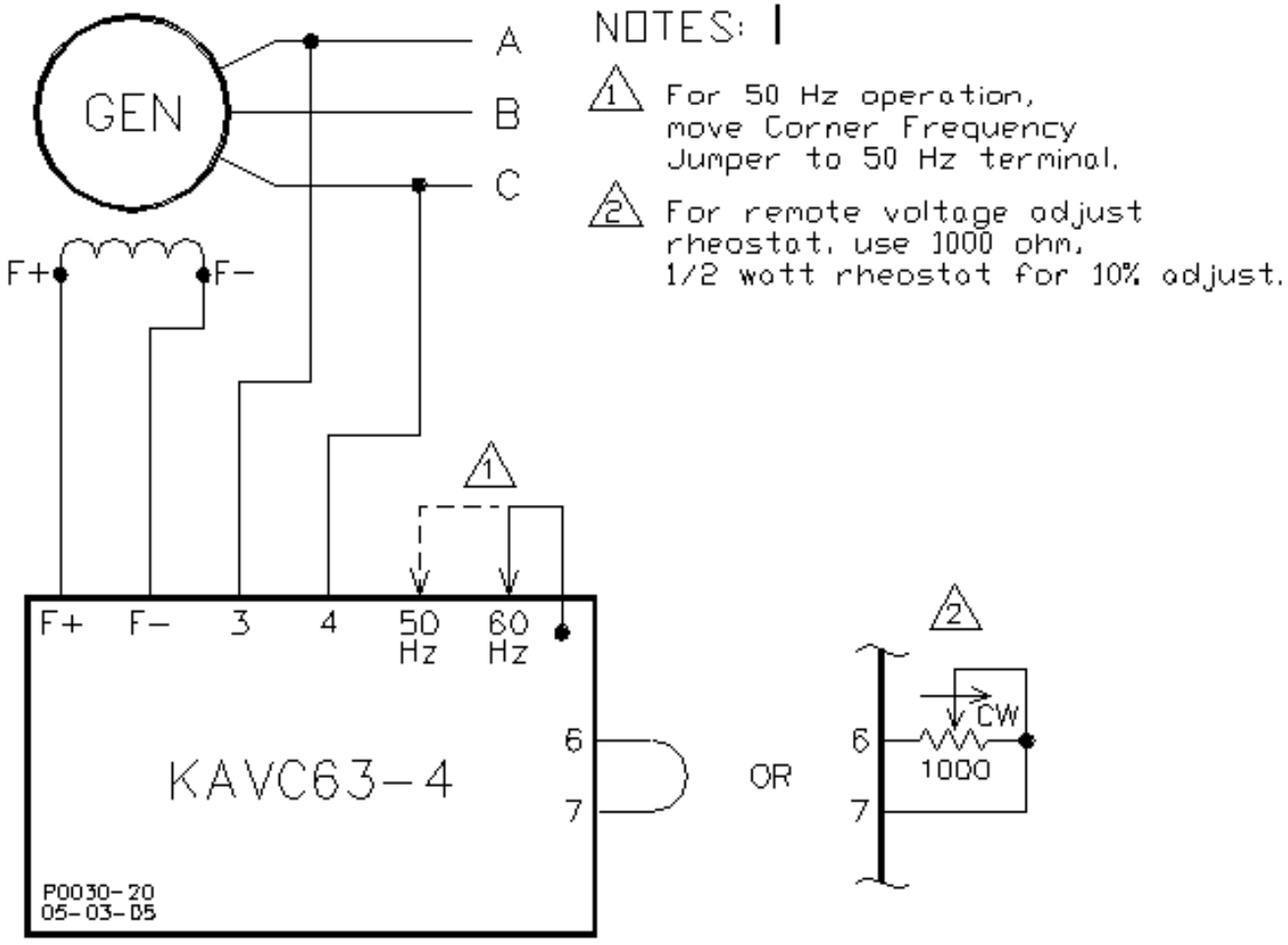

Figure 2: Typical Interconnection Diagram
Interconnection Diagram, 208/240 Vac Nominal.

DRAWING

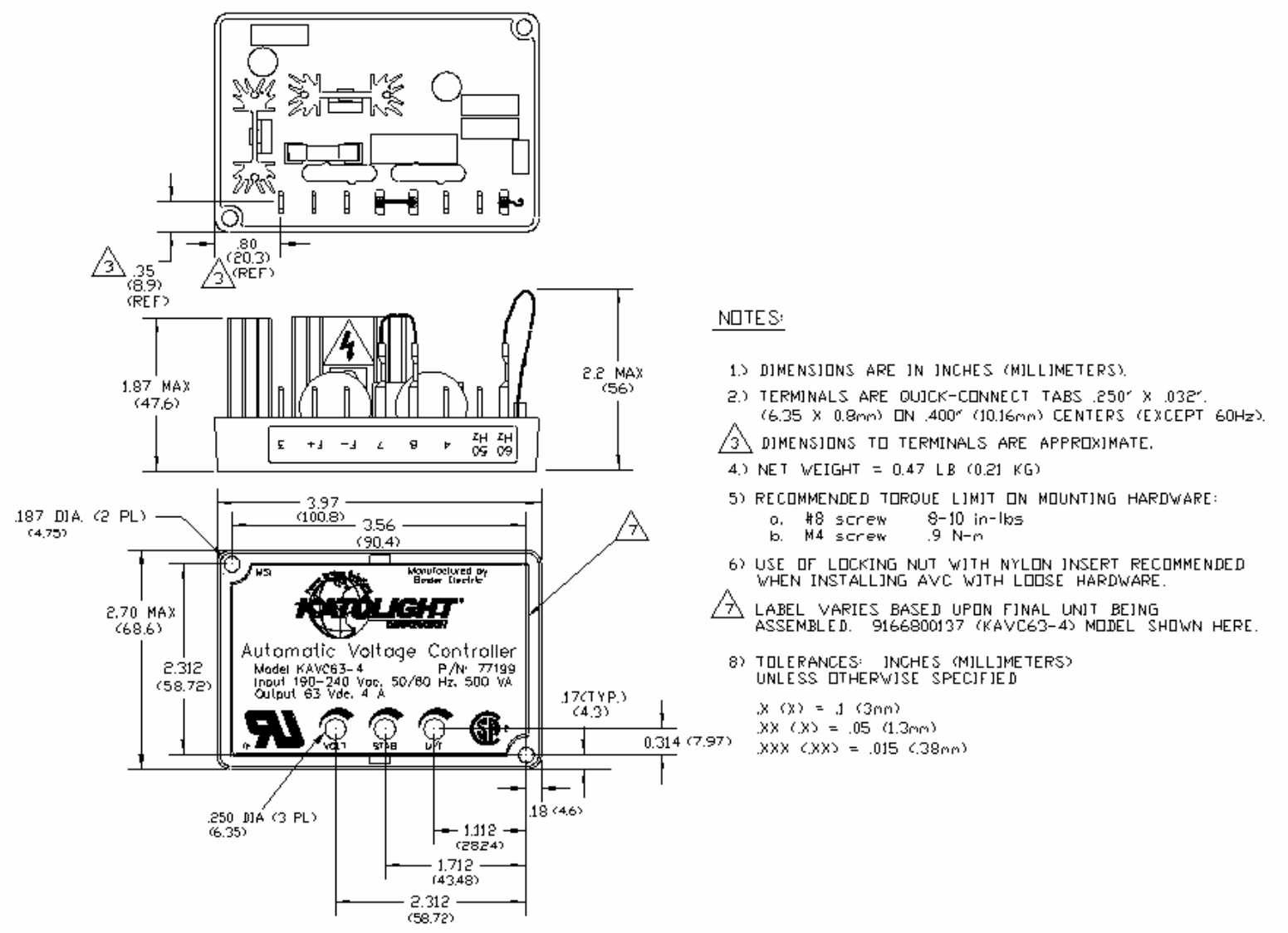

Figure 3: Outline Drawing

Materials and specifications subject to change without notice.
© Katolight Corporation. 100 Power Drive, Mankato, MN 56001

PUBLICATION NO. 351-01015-00A
PUBLICATION DATE: JANUARY 1993
SUPERSEDES PUBLICATION NO. 351-01015-00

INSTRUCTION MANUAL

KATO KCR 160
VOLTAGE REGULATOR

INCLUDES

SPECIFICATIONS AND GENERAL INFORMATION
PRINCIPLES OF OPERATION
INSTALLATION INSTRUCTIONS
ADJUSTMENT AND OPERATING INSTRUCTIONS
MAINTENANCE AND TROUBLESHOOTING
DRAWINGS

Kato Engineering

RELIANCE ELECTRIC

SAFETY PRECAUTIONS

Follow the precautions described below when installing, adjusting, testing, operating and repairing this equipment.

WARNING

Lethal voltages, 225 VAC or higher, are present at the voltage regulator when generator set is operating. Stop generator set before making connections, repairs or adjustments to this equipment. Disregarding this precaution can result in serious injury or electrocution.

WARNING

Off position on regulator shutdown switch, field circuit breaker or off-auto-manual switch does not remove voltage generated by action of residual magnetism in the exciter field. Stop generator set before making connections, repairs or adjustments. Disregarding this precaution can result in serious injury or electrocution.

WARNING

Install this equipment only in accordance with the instructions contained in this manual and wiring diagram provided with generator. Incorrect wiring can cause fire hazard and can destroy this equipment.

CAUTION

The DC output field circuit must not be opened or grounded while the unit is running. To do so will cause inductive arcing that can destroy this equipment.

CAUTION

High potential and megger tests must not be made to the voltage regulator. To do so will destroy this equipment.

CAUTION

Do not attempt to flash the exciter field while the generator set is running and be careful to maintain correct polarity when connecting flashing source. Disregarding this precaution can result in equipment damage.

TABLE OF CONTENTS

SECTION 1 GENERAL INFORMATION, SPECIFICATIONS, OPTIONS AND ACCESSORIES

	Page No.
General	1-1
Special Features	1-1
Options	1-1 and 1-2
Accessories	1-2
Specifications	1-2 and 1-3
Figure 1-1 KCR 160 Underfrequency Performance	1-3

SECTION 2 PRINCIPLES OF OPERATION

Regulator Circuits	2-1 – 2-3

SECTION 3 INSTALLATION

Safety Precautions	3-1
Mounting	3-1
Electrical Connections	3-1 and 3-2
Connecting Accessories	3-2

SECTION 4 OPERATION AND ADJUSTMENTS

General	4-1
Adjustments	4-1
Field Flashing	4-1 and 4-2
Regulator Voltage Shutdown Switch	4-2
Field Circuit Breaker	4-2
Auto/Manual Voltage Control	4-2
Initial Operation	4-2

SECTION 5 MAINTENANCE AND TROUBLESHOOTING

Safety Summary	5-1
Preventive Maintenance	5-1
Trouble Isolation to Faulty Operation of Voltage Regulator or Generator	5-1
Voltage Regulator Operational Test	5-1
Voltage Regulator Fuse	5-1
Troubleshooting	5-2
Table 5-1 Troubleshooting Chart	5-2 and 5-3

SECTION 6 DRAWINGS

General	6-1
Figure 6-1 Voltage Regulator Drawing	6-1
Figure 6-2 Voltage Regulator with UFL Schematic Diagram	6-2
Figure 6-3 Voltage Regulator with Flat Regulation Option Schematic Diagram	6-3
Figure 6-4 Typical Interconnection	6-4
Figure 6-5 Voltage Regulator Mounting Detail Drawing	6-5
Figure 6-6 Underfrequency Limit Jumper Wire	6-5
Figure 6-7 Sensing Transformer T1 Connection for 225 VAC ± 15% Sensing	6-6
Figure 6-8 Sensing Transformer T1 Connection for 115 VAC ± 15% Sensing	6-6
Figure 6-9 Voltage Regulator Operational Test	6-7

SECTION 1 GENERAL INFORMATION, SPECIFICATIONS, OPTIONS AND ACCESSORIES

GENERAL

The KCR 160 voltage regulator controls generator output voltage by regulating the current to the exciter field.

The regulators consist of transformers, transistors, silicon diodes, silicon controlled rectifiers, resistors, and capacitors.

The KCR 160 voltage regulator can be used on any generating system within its rating. The regulator specifications are contained on pages 1-2 and 1-3.

SPECIAL FEATURES

A. Underfrequency Limit

An underfrequency limit is a built-in feature in the KCR 160 voltage regulator except in the case where flat regulation option is provided.

The underfrequency limit circuit reduces the regulator output current applied to the exciter field when the generator is operated at less than rated speed. The factory set underfrequency operational threshold of standard KCR 160 voltage regulators is listed in the voltage regulator specifications. The percentage of generator output voltage that will be obtained for a specific reduction in frequency below the underfrequency operational threshold is shown in Figure 1-1. During operation at speeds that maintain generator frequency above the underfrequency operational threshold the underfrequency limit circuit has no effect on the regulator output current.

B. Field Flashing

The KCR 160 voltage regulator contains a built-in solid state generator field flashing circuit. The use of solid state components rather than a flashing relay eliminates the possibility of contact failure or contact arcing.

OPTIONS

Options available in this series regulator are described in the list that follows. The option must be specified when purchasing the voltage regulator.

A. Underfrequency Operational Threshold

Underfrequency operational threshold either higher or lower than 55 hertz for 60 hertz system or 45 hertz for 50 hertz system.

Where this is the case, the required underfrequency operational threshold must be specified when ordering the voltage regulator.

B. Flat Regulation

Flat regulation for use in variable frequency constant voltage application.

Where this requirement exists, it must be specified when ordering the voltage regulator.

NOTE: Any KCR 160 voltage regulator equipped with the flat regulation option will not have an underfrequency limit circuit.

C. External Voltage Adjust Option

All KCR 160 voltage regulators contain a voltage adjust control located on the regulator. In the case where panel mounted voltage adjust control is required, a 250 ohm, 2 watt rheostat will be supplied as a separate item.

D. 115 VAC Sensing Option

Standard model KCR 160 voltage regulator is equipped for 225 ± 15 percent sensing.

Where specified in the purchase order the regulator can be equipped for use with 115 VAC ± 15 percent sensing.

E. Stability Adjust Potentiometer Option

The regulator can be equipped with a stability adjust potentiometer R48. The option must be specified in the purchase order. This control provides adjustment of the stabilizing signal applied to the error detector circuit.

ACCESSORIES

Accessories are items that may be required in a generating system but are not included as built-in features or options of either the generator or the voltage regulator. They must be ordered as individual items. Some of the accessories available for use with voltage regulating systems are contained in the list that follows.

A. Voltage Matching and Power Isolation Transformers

Voltage matching transformers that also provide power isolation are available for applications where 100 to 139 VAC cannot be obtained from the generating system. Be sure to state generating system voltage when ordering voltage matching transformer.

B. Field Circuit Breaker

Field circuit breakers used in a regulating system equipped with KCR 160 voltage regulator contain a thermal element that connects in series with the voltage regulator DC output while the circuit breaker contacts series connect in the conductor carrying input power to the voltage regulator.

C. Automatic /Manual Voltage Control

This control module contains a three position switch to allow automatic voltage regulation by action of the voltage regulator or manual voltage control by action of the manual voltage control circuitry. The OFF position removes excitation by disconnecting power to both the voltage regulator and the manual voltage control circuitry. The manual voltage control circuit portion of this control includes a rectifier and a manual voltage control variac.

D. Regulator Voltage Shutdown Switch (Engine Idle Switch)

This switch is for use in engine driven generator sets where the system does not include underfrequency protection or another means of removing excitation such as field circuit breaker or an automatic/manual control switch. Opening the switch removes input power to the voltage regulator.

SPECIFICATIONS

NOTE: The following specifications are applicable for KCR 160 voltage regulators except as noted.

A. Input Power

Voltage:	100 VAC to 139 VAC.
Frequency:	50/60 hertz.
Burden:	350 volt ampere, maximum.

B. Sensing

Voltage:	225 VAC ± 15 percent except where 115 VAC sensing is specified in purchase order.
Frequency:	50/60 hertz.
Burden:	1 volt ampere, maximum.

C. DC Output Power

Voltage:	65 volt dc, maximum continuous; 90 volt DC one minute field forcing.
Current:	3 ampere, maximum continuous; 4 ampere, one minute field forcing.
Field Resistance:	Approximately 20 ohms, minimum; 400 ohms maximum.

D. Underfrequency Operational Threshold

45 hertz for 50 hertz generating system;
55 hertz for 60 hertz system (except otherwise specified in purchase order).

NOTE: Regulators with flat regulation option will not have underfrequency limit circuitry.

SPECIFICATIONS (Cont.)

E. Regulator Response

Less than 17 millisecond.

F. Power Dissipation

Less than 25 watts at maximum continuous rating.

G. Operating Temperature

-40°C to +60°C.

H. Physical Size

Height:	2.25 inches (5.7 cm).
Width:	7.25 inches (18.4 cm).
Length:	6.25 inches (15.9 cm).
Weight:	1 lb. 14 oz. (850 gm) with base.

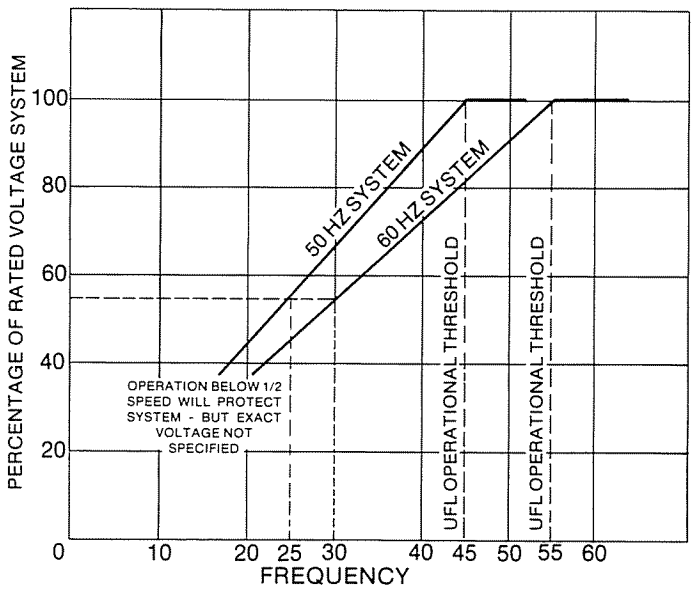

FIGURE 1-1 KCR 160 UNDERFREQUENCY PERFORMANCE

SECTION 2 PRINCIPLES OF OPERATION

REGULATOR CIRCUITS

The KCR 160 voltage regulator consists of seven basic circuits described in the paragraphs that follow. All of these circuits except the external voltage adjust option are contained on an etched circuit board. Drawings that show the location of parts comprising the regulator and the electrical interconnection of the parts are shown in Section 6 of this manual.

A. Output Power Circuit

This circuit supplies the exciter field current. The circuit consists of silicon diodes D12 and D13, a free wheeling rectifier D14, silicon controlled rectifiers SCR1 and SCR2, a capacitor C10, and a resistor R45.

The 120 VAC ± 15 percent regulator input power is applied to a single phase SCR/diode bridge comprised of diodes D12, D13 and silicon controlled rectifiers SCR1 and SCR2. It is the conduction time of the SCR/diode bridge circuit that determines the amount of output current to the exciter field. The greater the time of conduction of the SCR's the greater the output voltage. Conduction time is controlled by the timing of turn-on gating pulses from the regulating circuit.

The output power circuit includes an inductive load transient voltage suppression network comprised of capacitor C10, resistor R45, and free wheeling rectifier D14. Capacitor C11 and resistor R44 assist in spike suppression. Diodes D10 through D13 supply power to the flashing and regulation circuits.

B. Sensing Circuit

This circuit is comprised of sensing transformer T1, diodes D1,D2, D3, D4, resistor R1, capacitor C1, resistors R3 and R4, voltage adjust potentiometer R2, and when specified in the purchase order, an external voltage adjust rheostat.

Diodes D1 through D4 form a full-wave bridge rectifier. Sensing transformer T1 is a voltage step-down transformer with secondary winding voltage about one-tenth as high as the voltage applied across the primary winding. Resistor R1 and capacitor C1 form an RC filter which reduces the AC ripple present in the rectifier output. Potentiometer R2, resistors R3 and R4, and when supplied the external voltage adjust rheostat form a series connected voltage divider.

The sensing circuit functions as follows:

The generator sensing voltage is connected at terminals E1 and E3. This voltage is applied across the primary winding on the sensing transformer. The output voltage from the sensing transformer secondary winding is rectified and filtered and a representative sample, taken from the voltage divider, is applied to the error detector.

C. Voltage Adjust

The voltage adjust permits adjustment of generator voltage. This control forms part of the sensing circuit voltage divider.

Where the external voltage adjust is not supplied, a jumper is connected across regulator terminals R1-R2 and voltage adjustment is made by turning potentiometer R2 using a small screwdriver.

Where the external voltage adjust rheostat is provided, the jumper is removed from the terminal R1 and R2 and the external rheostat is electrically series connected in the voltage divider circuit through interconnecting wires to terminals R1 and R2. Voltage adjustment is made by turning the external voltage adjust rheostat. In this case the internal potentiometer R2 functions as a voltage range control. It is normally set to establish maximum voltage limit of the external voltage adjust rheostat.

D. Error Detector

Transistors Q1 and Q2 are connected in a manner that forms an emitter coupled differential amplifier. A representative sample of the rectified sensing voltage, taken at the junction of resistors R3 and R4, is applied as input voltage at the base of Q1. A reference voltage taken from the underfrequency limit circuitry or from the circuit comprised of zener diode Z1 and diodes D16, D17 is applied as the input voltage at the base of Q2. When the two voltages are not equal, the resulting difference is amplified and applied to the regulation circuit.

E. Regulation Circuit

The circuit controls the regulator output by regulating the turn-on gating pulse applied to the silicon controlled rectifiers in the output power circuit. The regulation circuit, in turn, is controlled by action of the error detector.

Diodes D8 and D9, zener diode Z2, resistors R33 through R38, resistors R46 and R47, capacitor C9, programmable unijunction transistor Q7, and two current dividers form the regulation circuit.

The conduction time of Q7 is controlled by the charge rate of capacitor C9 while the charge rate of C9 is regulated by the output of the error detector. The output of programmable unijunction transistor Q7 is applied to two current dividers, comprised of resistors R41 and R43, and R42 and R43. These current dividers provide the turn-on gating signal to the output power circuit SCR's.

F. Generator Field Flashing Circuit

This circuit provides a gating signal to the regulator output power SCR's each time the generator is started. When the generator voltage builds-up to about 70 percent of rated sensing voltage the flashing circuitry turns-off and the gating signal is controlled by action of the regulating circuitry. The flashing circuit operates as described in the paragraphs that follow. Transistors Q5 and Q6, resistors R24 through R29, and D7 form a Schmidt trigger circuit. During generator starting the field effect transistor Q8 conducts firing SCR3 which in turn provides a turn-on signal to the output power stage circuit SCR's. The Schmidt trigger circuit conducts when generator sensing voltage increases to approximately 70 percent of rated. This action turns off Q8 and SCR3 which terminates field flashing.

G. Stability Circuit

The voltage regulator includes a negative feedback system loop stability circuit comprised of resistors R30, R31 and R32 and capacitors C7 and C8. This RC network injects a stabilizing signal from the regulator output into the error detector which helps to prevent generator voltage oscillation.

NOTE: Where specified in the purchase order, regulator can be equipped with a stability adjust potentiometer.

H. Underfrequency Limit (UFL)

This circuit provides a reference voltage to the error detector which is constant when the generator is operating above the limiting frequency and decreases in proportion to the generator frequency during underspeed operation. The proportionate decrease in voltage applied to the reference side of the error detector during underspeed operation results in a decrease in regulator power SCR phase angle, which proportionately reduces excitation and generator output voltage. This action reduces kW load which enables faster engine speed recovery and provides voltage regulator and generator underfrequency protection.

The UFL circuitry described in the paragraphs that follow is located on the voltage regulator circuit board as shown in Figure 6-2. The UFL consists of a two-pole filter, a Schmidt trigger circuit, a circuit that provides pulse proportional to the generator frequency and an underfrequency operational threshold adjustment R18.

The two-pole filter provides voltage to the reference side of the error detector which is the average of the Schmidt trigger output. The filter consists of transistor Q3, resistors R14 through R16, and capacitors C2 and C3.

The Schmidt trigger consists of three nor gates within integrated circuit IC1 (pins 4 through 14). It is turned on by a pulse from Q4 and off by a pulse from the timing capacitor C4. For operation in 50 Hertz application, parallel connected capacitors C12 and C4 provide the turn-off pulse. During operation at rated frequency Q4 turns the Schmidt trigger on but the timing capacitors discharged before reaching the threshold level of the Schmidt trigger. Thus during operation at rated frequency the Schmidt trigger stays on. Its output is a constant level DC voltage which results in two-pole filter output that is approximately the same as the fixed reference voltage across the circuit comprised of zener diode Z1 and diodes D16 through D18.

Whenever frequency drops below the underfrequency operational threshold the timing capacitor(s) charge to the threshold level of the Schmidt trigger, which then turns off the Schmidt trigger. The trig-

ger turns on from the next pulse from Q4, and again turns off when the timing capacitors charge to the threshold level of the Schmidt trigger. The sequence of ON-OFF pulses changes the Schmidt trigger output from a constant level DC signal to a square wave which decreases the average output of the two-pole filter. This action lowers the voltage at the reference side of the error detector with respect to the sensing side of the error detector. The regulator then reacts by decreasing the phase angle of the power SCR's reducing excitation and thereby, generator output voltage. During underspeed operation below the underfrequency operational threshold the ratio of on time to off time of the Schmidt trigger decreases proportionally to the change in frequency. This action results in a decrease in voltage that is proportional to the decrease in frequency as illustrated in Figure 1-1.

The circuit that provides the turn-on and turn-off pulse for the Schmidt trigger described in the preceeding paragraphs consists of transistor Q4, capacitor C5, resistors R20 and R21, part of integrated circuit IC1, timing capacitor C4 and for 50 hertz operation, timing capacitors C4 and C12. The circuit operates as described in the paragraph that follows.

Pins 1 and 2 on IC1 receive a rectified signal from sensing circuit diodes D5 and D6 which is proportional to the generator frequency. The output at pin 3 on IC1 is a square wave which is differentiated by capacitor C5. These pulses are divided by resistors R20 and R21. The resultant signal turns transistor Q4 on and off. When Q4 conducts, the pulse turns on the Schmidt trigger described in the preceeding paragraphs and the timing capacitors discharge. The timing capacitors then charge while Q4 is off. The Schmidt trigger output controls the two-pole filter described in preceeding paragraphs.

SECTION 3 INSTALLATION

SAFETY PRECAUTIONS

Follow the safety precautions contained on page i of this manual when installing, operating, adjusting, and making repairs to this equipment.

MOUNTING

The voltage regulator is convection cooled. Vertical mounting is recommended to obtain optimum cooling. The regulator can be mounted on sheet metal plates, within enclosures or within the generator terminal box providing that shock and vibration are not excessive and temperature does not exceed 60° C. Retain sufficient space about the regulator for cooling airflow and making electrical connections. Mount as illustrated in Figure 6-5.

ELECTRICAL CONNECTIONS

Electrical wire connections on the regulator are made to the terminal strip located on the regulator. The underfrequency jumper, transformer T1 connections and the fuse are contained on the circuit board.

A. Input Power (Terminals P1 and P2)

The voltage regulator operates on a power input voltage applied to terminals P1 and P2 (see Specifications for input voltage and frequency). If the correct voltage is not available or if the circuit supplying the input voltage is grounded, a power isolation transformer must be used.

NOTE: To ensure correct frequency between the sensing and power circuitry, regulator input power must be supplied by the generator.

B. Regulating Sensing (Terminals E1 and E3)

Sensing can be taken from any pair of generator lines that provide the correct sensing voltage at the voltage regulator sensing terminals. Standard model KCR 160 regulators have single phase, 50/60 hertz, is 225 VAC ± 15 percent sensing. The sensing transformer T1 is connected as shown in Figure 6-7.

Standard models can be modified for 115 VAC ± 15 percent sensing by modification of the regulator as illustrated in Figure 6-8.

CAUTION

Circuit between the regulator output and exciter field must not be grounded and must not be opened while generator is running. To do so will cause inductive arcing that can destroy this equipment.

C. Sensing Transformer T1

The sensing transformer primary contains two windings that can be connected either series, for 190 to 260 VAC sensing (225 ± 15%), or parallel, for 98 to 132 VAC sensing (115 ± 15%). The connections are made at the regulator circuit board as follows:

1. T1 Connected Series for 225 VAC ± 15% Sensing: Except when otherwise specified in the purchase order the sensing transformer T1 primary is connected to the circuit board in series for 225 VAC sensing as illustrated in Figure 6-7.

2. T1 Connected Parallel for 115 ± 15% Sensing: Standard KCR 160 voltage regulators can be modified for 115 VAC ± 15% sensing by installing two jumper wires and cutting a section of the foil on the foil side of the circuit board as shown in Figure 6-8. This change connects the sensing transformer primary winding in parallel.

D. Output Power (Terminals F+ and F-)

Correct polarity must be maintained between the regulator output and exciter field. To minimize conducted EMI the leads should be kept as short as possible and should be shielded when more than one or two feet in length. Effective shielding can be attained by routing both leads through 1/2-inch metal conduit. When the voltage regulator is installed within the generator outlet box it is possible to achieve satisfactory results with short non-shielded leads.

E. Underfrequency Limit

Unless otherwise specified in the purchase order, the KCR 160 voltage regulator will be provided with underfrequency limit for use with 60 hertz generator. The difference between the underfrequency limit circuit used with 60 hertz generators and the underfrequency limit circuit used with 50 hertz generators and the means of converting the circuit is described in the procedures that follow.

1. 50 Hertz Operation: For 50 Hz operation the voltage regulator must have jumper wire across a portion of the circuit board identified 50 Hz (See Figure 6-6). The jumper wire is installed from the component side of the board and its ends soldered to the foil side of the board.

2. 60 Hertz Operation: For 60 Hz operation the jumper wire is removed from the portion of the circuit board identified 50 Hz. To convert from 50 Hz system operation to 60 Hz system operation remove jumper wire by cutting the jumper at each of its ends.

F. Regulator Fuse

The KCR 160 is supplied with a 2 amp normal blow fuse in the power input circuit. Fuse rating is 4 amp max. Recommended fuse size is 1½ to 2 times the exciter field current with rated load connected to the generator. If an overload should cause the fuse to open, replace the fuse as described in the Maintenance Section in this manual.

G. External Voltage Adjust Rheostat

This option where provided is inter-connected to regulator terminals R1 and R2 as shown in Figures 6-2 and 6-3. In order to provide sufficient mechanical strength size 16 or larger wires are recommended. Terminals on the rheostat are viewed from the rheostat back.

CONNECTING ACCESSORIES

CAUTION

The circuit between the voltage regulator DC output (terminals F+ and F-) and the exciter field must never be opened during operation. To do so will produce inductive arcing that can destroy the voltage regulator. Therefore, never install the contact portion of circuit breakers, relays, or switches in the field circuit.

A. Regulator Voltage Shutdown Switch (Engine Idle Switch)

Where generator set is equipped with this switch, opening the switch removes input power from the regulator thereby shutting down the excitation current applied to the exciter field. This switch must always be series connected in the circuit providing input power to regulator terminals P1 or P2.

B. Field Circuit Breaker

The system can be equipped with a field circuit breaker. The thermal element of the circuit breaker is series connected in the field circuit from the regulator output terminal F+ or F-. The contact portion of circuit breaker must be series connected in the regulator input power to terminal P1 or P2. NEVER CONNECT CIRCUIT BREAKER CONTACTS TO THE REGULATOR OUTPUT TERMINALS F+ OR F-.

C. Manual Voltage Control

An auto/manual voltage control module is available for use with the generating system to provide manual voltage control independent of the voltage regulator. Wires from both the regulator output and the manual control output connect to the exciter field. Switch contacts must not be used in the circuit between the regulator output and the exciter field. A multi-pole switch which connects input power to the voltage regulator or input power to the manual voltage control permits selection of either the automatic voltage control mode of operation or the manual voltage control mode of operation. OFF position opens input power to both the voltage regulator and the manual voltage control circuitry.

SECTION 4 OPERATION AND ADJUSTMENT

GENERAL

This section contains operation and adjustment procedures. Before operating make certain that the regulator is connected into the system as shown on the interconnection diagram provided with the generator set and as described in Section 3 of this manual. Follow the safety precautions contained on page i of this manual when adjusting and checking connections to this equipment.

ADJUSTMENTS

A. Potentiometer R2 (Voltage Adjust or Voltage Range Adjust)

This control is located on the voltage regulator. The control is a ten turn potentiometer. Adjustment is made using a small screwdriver. Maximum resistance is attained at full counter-clockwise adjustment and complete clockwise adjustment results in minimum resistance.

1. Where generator set is not equipped with the external voltage adjust option, generator voltage is adjusted by turning potentiometer R2. Complete (CCW) maximum resistance results in minimum voltage. Complete (CW) minimum resistance results in maximum voltage. Adjustment is made at rated RPM and with the generator output circuit breaker open.

2. Where generator set is equipped with the external voltage adjust rheostat option, the potentiometer R2 establishes the voltage range of the external voltage adjust rheostat. R2 is typically adjusted to limit the maximum voltage. General procedure is as follows:
   a. Adjust external voltage adjust rheostat to complete clockwise (maximum voltage).
   b. Be sure output circuit breaker is OFF.
   c. Start generator set and increase speed to rated RPM.
   d. Monitor voltage using generator voltmeter.
   e. Adjust potentiometer R2 to position where generator voltmeter measures maximum operating voltage.
   f. Reduce generator voltage to nominal operating voltage by turning the external voltage adjust rheostat in counter clockwise direction.

B. Underfrequency Operational Threshold Adjust R18

Adjustment was made at the factory. Voltage will decrease at frequencies below the operational threshold as shown in Figure 1-1.

C. Stability Adjust Option R48

This optional control permits adjustment of the stability signal applied to the regulator error detector circuit. Where provided, this control is factory adjusted. One complete turn changes resistance from minimum resistance to maximum resistance. Adjustment should be made only in case generator voltage is not stable (oscillates). Adjustment is made at rated RPM with no-load applied. Check stability and, if necessary, make final adjustment while load is applied. Clockwise rotation increases the stabilizing signal. Measurement of generator voltage stability is best made using an oscilloscope.

FIELD FLASHING

CAUTION

Do not attempt to flash the exciter field while the generator set is running and be careful to observe polarity when connecting flashing source. Disregarding this precaution can result in equipment damage.

The voltage regulator contains an internal solid state field flashing circuit. A minimum of about 6 VAC at the regulator input power terminals P1 and P2 is required for operation of the flashing circuit. Usually the exciter field poles retain sufficient magnetism to allow circuit operation and generator voltage buildup. However, if flashing is required, stop the generator and then flash field as given in the procedure that follows.

1. Connect the negative lead of a 12 or 24 volt DC flashing source onto regulator terminal F-. Do not remove any other wires from terminal F-.
2. Slide the positive lead of the flashing source onto regulator terminal F+. Only a few seconds flashing should be necessary.
3. Slide the flashing source positive lead off terminal F+. Then remove flashing source negative lead from terminal F- and tighten terminal.
4. Start generator and check for satisfactory voltage buildup.

Katolight Service - Master Repair Manual - Page 1266

WARNING

Off position on regulator shutdown switch, field circuit breaker or Off-Auto-Manual switch does not remove voltage generated by action of residual magnetism in the exciter field. Stop generator set before making connections, repairs, or adjustments. Disregarding this precaution can result in serious injury or electrocution.

REGULATOR VOLTAGE SHUTDOWN SWITCH (ENGINE IDLE SWITCH)

The generator set may be equipped with a switch to allow removal of excitation to the exciter field in an emergency or when the prime mover must be operated at reduced speed. The switch must be installed in the regulator input power wiring to terminal P1 or P2. Manually opening the switch shuts down the regulator. Manually close the switch to obtain regulator output.

FIELD CIRCUIT BREAKER

The generator set may be equipped with a field circuit breaker that prevents excessive field current. The circuit breaker thermal element is installed in the field circuit while the circuit breaker contacts must be in the input power wiring to regulator terminals P1 or P2. When tripped open, the circuit breaker removes excitation by removing input power to the voltage regulator. Make certain the field circuit breaker is closed before operating the generator set.

AUTO/MANUAL VOLTAGE CONTROL

The generator set may be equipped with an auto/manual voltage control module. This option allows operation in the manual voltage control mode for trouble isolation during troubleshooting or emergency operation in the event a failure of the regulator occurs. This option includes a three position switch. The AUTO position connects power to the voltage regulator providing automatic voltage regulation, the MAN position connects power to the manual voltage control, and the OFF position removes input power to both the voltage regulator and manual voltage control circuitry thereby removing excitation applied to the exciter field. Normal operation of the generator set is the automatic voltage control mode (switch set to AUTO).

INITIAL OPERATION

Before operating the regulator for the first time, verify correct wiring and review the preceeding section of this manual. Initial startup should be made with no-load applied (output circuit breaker OFF). Verify operation is satisfactory before closing circuit breaker.

SECTION 5 MAINTENANCE AND TROUBLESHOOTING

SAFETY SUMMARY

Follow the safety precautions contained on page i of this manual when testing, troubleshooting, and making repairs to this equipment.

PREVENTIVE MAINTENANCE

This unit should be inspected periodically to insure wiring to the voltage regulator is in good condition, terminal connections are tight and free of corrosion, and air flow is not restricted. Accumulations of dust, dirt or other foreign material should be removed using a clean cloth. Under normal operating conditions, inspection at six month intervals is generally sufficient.

TROUBLE ISOLATION TO FAULTY OPERATION OF VOLTAGE REGULATOR OR GENERATOR

A. Manual Voltage Control

In the event abnormal operation such as high voltage, low voltage, or unstable voltage occurs during operation in the automatic voltage control mode, the set may be operated in the manual mode to determine whether problem persists. Satisfactory operation in the manual voltage control mode while system malfunction occurs in the automatic voltage control mode indicates that the problem is within the voltage regulator. If operation is not satisfactory in both the manual and automatic regulating modes, the problem is within the exciter or generator.

B. Field Flashing

Failure of generator voltage build-up when the generator set is started can be due to loss of residual magnetism in the exciter field. About 6 VAC minimum is required at regulator input terminals P1 and P2 for automatic build-up by the internal flashing circuitry. Residual magnetism can be restored by flashing the exciter field as described in Section 4 of this manual.

C. Excitation From 12-24 VDC Adjustable DC Power Source or Battery

Where the generator set is not equipped with an auto/manual voltage control the application of rated no-load excitation from a 12-24 VDC power source or batteries may be used to determine whether abnormal operation is caused by faulty operation of the voltage regulator or, exciter or generator troubles. Generator no-load excitation may be determined from the factory test tag supplied with the generator.

This test requires removing the regulator input power wires from regulator terminals P1 and P2 and the regulator DC output (field) wires from terminals F- and F+. General procedure is given in the paragraphs that follow.

After the wires described in the preceeding paragraphs have been removed from the regulator terminals, insulate lugged ends on the regulator input power wires and connect a variable DC power supply or battery with 1.5 ampere or higher DC ammeter to the exciter field leads. Where battery is used, series connect a variable resistor or rheostat in the circuit. Be sure positive of power source is connected to F+.

Operate generator set at rated speed and adjust to rated no-load excitation listed on the generator factory test data tag. Measure generator output voltage. Where rated no-load voltage is attained, problem is most likely the voltage regulator. Abnormal generator voltage indicates problem is within the exciter or generator.

VOLTAGE REGULATOR OPERATIONAL TEST

Voltage regulator test can be made by removing the voltage regulator from the generating system and testing as described in Figure 6-9. When installing the regulator back into the regulating system make certain it is wired as shown on the wiring diagram provided with the generator set.

VOLTAGE REGULATOR FUSE

The KCR 160 is supplied with a 2 amp normal blow fuse in the power input circuit. Fuse rating is 4 amp max. Recommended fuse size is 1½ to 2 times the exciter field current with rated load connected to the generator.

Katolight Service - Master Repair Manual - Page 1268

TROUBLESHOOTING

To avoid trouble during initial operation the importance of eliminating wiring errors cannot be overemphasized. Excessively high voltage at the regulator input power terminals, excessively high or low voltage at the regulator sensing terminals, or opening or grounding the regulator output can cause voltage regulator failure.

Some of the possible malfunctions that could occur during operation of the voltage regulator and the corrective action are listed in Table 5-1.

TABLE 5-1 TROUBLESHOOTING CHART

SYMPTOM	PROBABLE CAUSE	REMEDY
No voltage output	Regulator voltage shutdown switch or field circuit breaker open.	Close switch or circuit breaker.
	Auto/Manual/Off switch set to Off.	Set to AUTO position.
	Loss of exciter residual magnetism.	Flash field as described in Section 4 in this manual.
	Voltage regulator or voltage regulator fuse open.	Replace voltage regulator or replace fuse.
	Defective generator or exciter.	Test windings and exciter diodes. Replace defective parts.
	No connections to regulator terminals F+ and F- or P1 and P2.	Refer to wiring diagrams provided with generator set.
Voltage remains at residual voltage level provided by exciter.	Same as for preceeding symptom except exciter has residual voltage.	Same as for preceeding symptom except field flashing is not required.
Voltage builds up until flashing circuit deactivates then fluctuates between about 70 percent and 30 percent of rated.	Voltage regulator.	Replace voltage regulator.
Generator voltage low while regulator output is either normal or higher than normal.	Exciter or generator.	Test windings and exciter diodes. Replace faulty parts.
	High resistance connections between regulator output F+ and F- and exciter field.	Check wiring and connections. Tighten and clean terminals.
	Overload.	Reduce load applied to generator.
Generator output voltage and excitation lower than normal.	Underspeed.	Increase speed to produce rated output frequency.

TABLE 5-1 TROUBLESHOOTING CHART (Cont.)

SYMPTOM	PROBABLE CAUSE	REMEDY
Generator output voltage and excitation higher than normal.	Underfrequency circuit operating at too high frequency.	Contact factory.
	Voltage too low at regulator input power terminals P1 and P2.	Voltage should be 120 VAC ± 10 percent.
	Wrong sensing voltage at terminals E1 and E3 or transformer T1 not connected correctly.	Refer to Section 3, Installation, and Figures 6-7 and 6-8.
	Faulty voltage regulator.	Replace voltage regulator.
Voltage and excitation higher than normal.	Short in regulator sensing circuitry.	Check wiring to terminals E1 and E3. Replace voltage regulator if short is within the voltage regulator.
	Open circuit at regulator terminals E1 and E3.	Correct wiring error.
	Wrong voltage at regulator sensing terminals E1 and E3 or sensing transformer T1 not connected correctly.	Refer to the wiring diagrams provided with the generator set and review Section 3 Installation.
	External voltage adjust option not connected correctly or is wrong size.	Connect as shown in Figure 6-4. Must be 250 ohm rheostat.
	Where external voltage adjust option is not provided, jumper not installed across regulator terminals R1 and R2.	Install jumper across regulator terminals R1 and R2.
Poor regulation.	Load not balanced.	Balance load.
	Voltage too low at regulator input power terminals P1 and P2.	Voltage should be 120 VAC ± 10 percent.
	Prime mover speed fluctuating.	Adjust prime mover governor.
	Voltage regulator.	Replace voltage regulator.
	Operating temperature too high.	Refer to Specifications. Add cooling or take other measures to reduce ambient temperature.
	Adjust. Refer to procedure given in Section 4 in this manual.	Adjustment of potentiometer R48 required. (Applicable only in regulator with stability adjust option.)

SECTION 6 DRAWINGS

GENERAL

This section contains drawings and diagrams to facilitate installation, operation, and maintenance of the voltage regulator. An interconnection diagram is generally provided with the generator set.

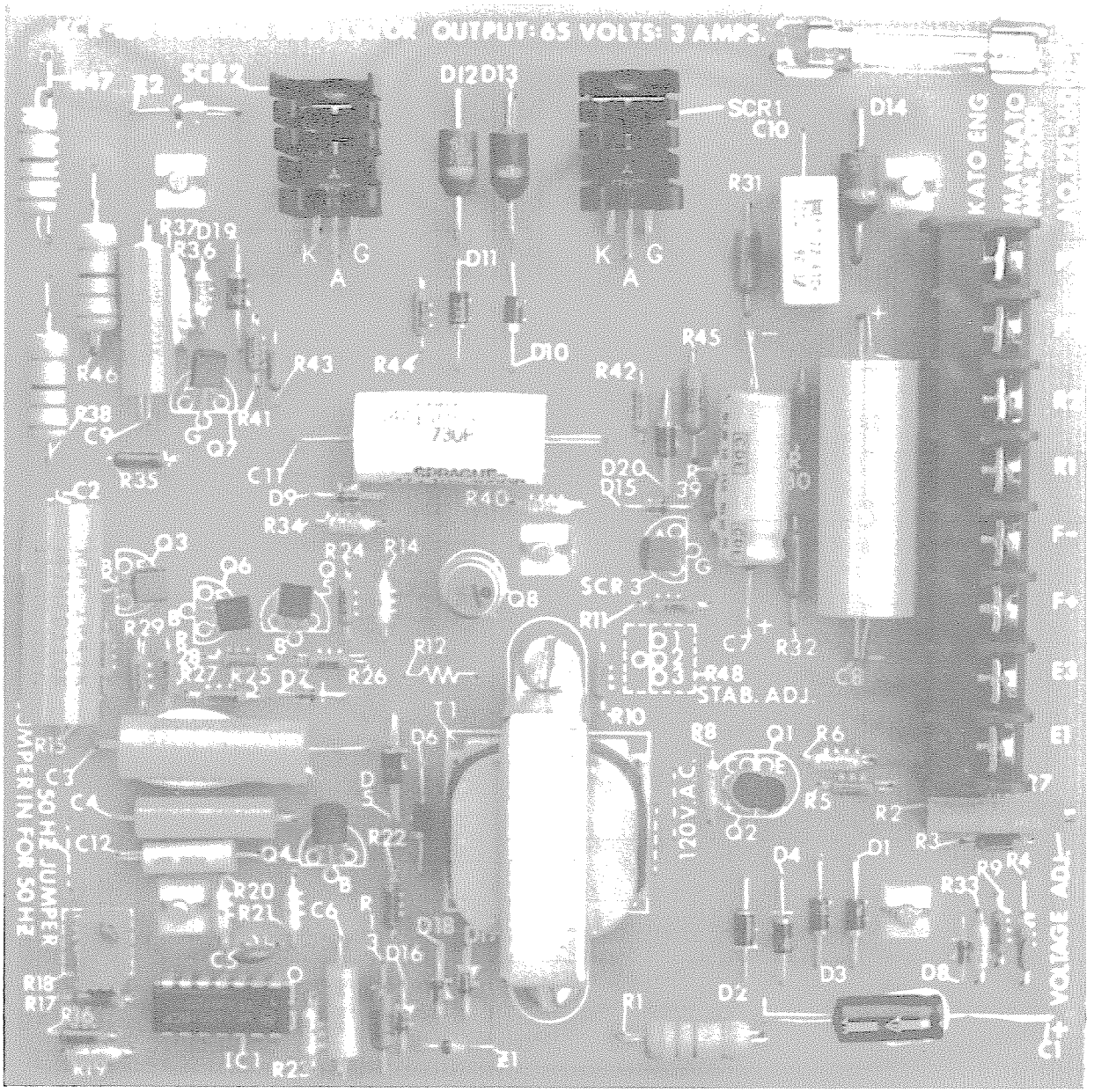

FIGURE 6-1 VOLTAGE REGULATOR DRAWING

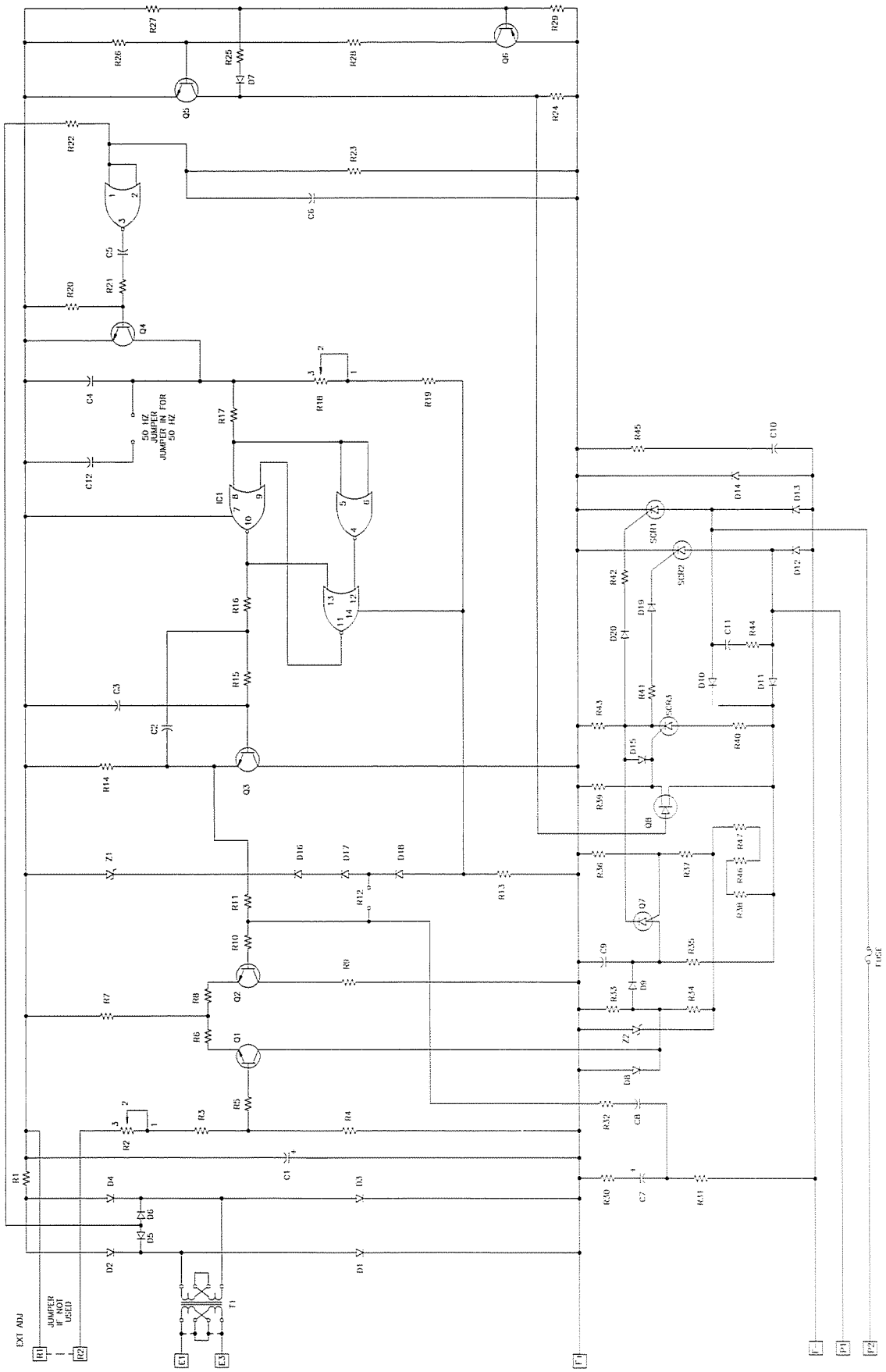

FIGURE 6-2 VOLTAGE REGULATOR WITH UFL SCHEMATIC DIAGRAM

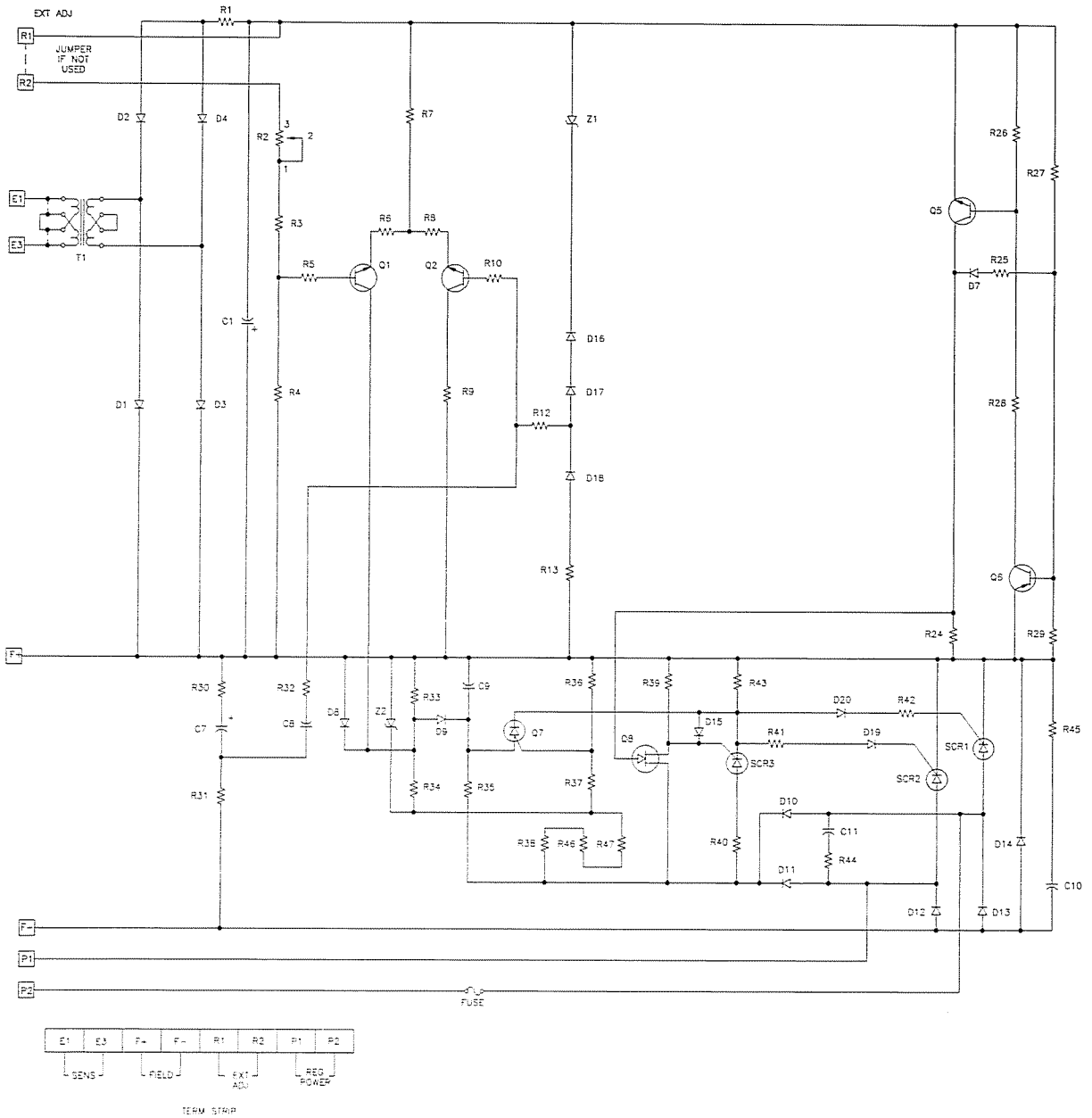

FIGURE 6-3 VOLTAGE REGULATOR WITH FLAT REGULATION OPTION SCHEMATIC DIAGRAM

NOTES

1. Where field resistance is less than 20 ohms a series resistance may be added to limit maximum current to 3 amp. continuous, 4 amp during field forcing.
2. Where generator set is equipped with field circuit breaker be sure to install thermal element of breaker in positive line. Circuit breaker contact must be in current carrying line to the regulator input power.
3. Shutdown switch allows removal of excitation by opening power to voltage regulator. Where one of the wires to regulator input power is a neutral line be sure to connect the switch in current carrying conductor.
4. Voltage regulator requires single phase, 50/60 Hz, 120 VAC ± 10% input power. A power matching transformer is required when correct input voltage is not available.
5. Verify correct sensing voltage. Standard KCR 160 voltage regulators utilize 225 VAC ± 15% sensing internally connected as ahown in Figure 6-7. Optional voltage is shown in Figure 6-8.
6. Where external voltage adjust option is not supplied install a jumper across regulator terminals R1 and R2. Jumper across regulator terminals R1 and R2 is not used with external voltage adjust.
7. External voltage adjust wiring as viewed from back of rheostat.

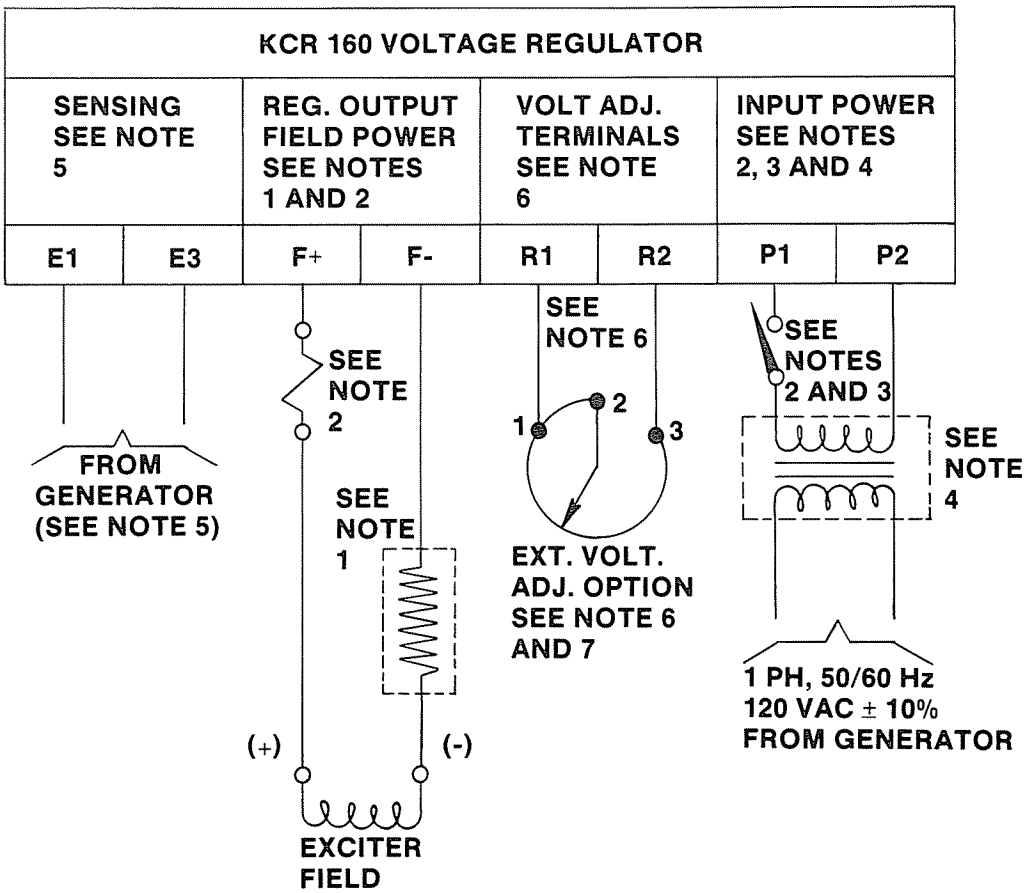

FIGURE 6-4 TYPICAL INTERCONNECTION

Height: 2.25 in. max. with base plate
1.75 in. max. without base plate

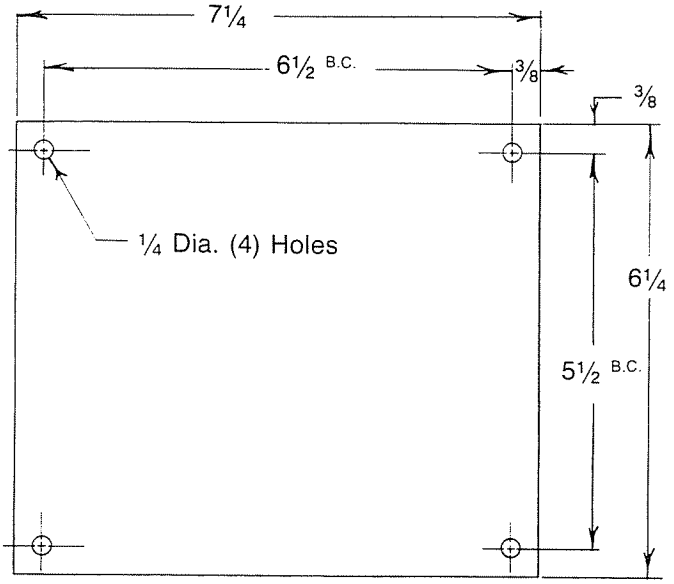

Fig. 6-5a. Regulator Mounting Detail

Circuit Board can be mounted without base plate as shown in Fig. 6-5b. Use 5 #8-18 ¾ inch "B" point self-tapping screws through 3/16 holes in panel or mounting surface and thread completely in plastic pads on regulator.

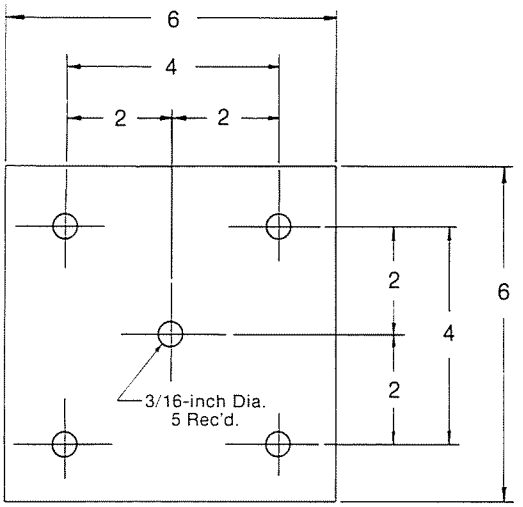

Fig. 6-5b. Circuit Board Mounting Detail

FIGURE 6-5 VOLTAGE REGULATOR MOUNTING DETAIL DRAWING

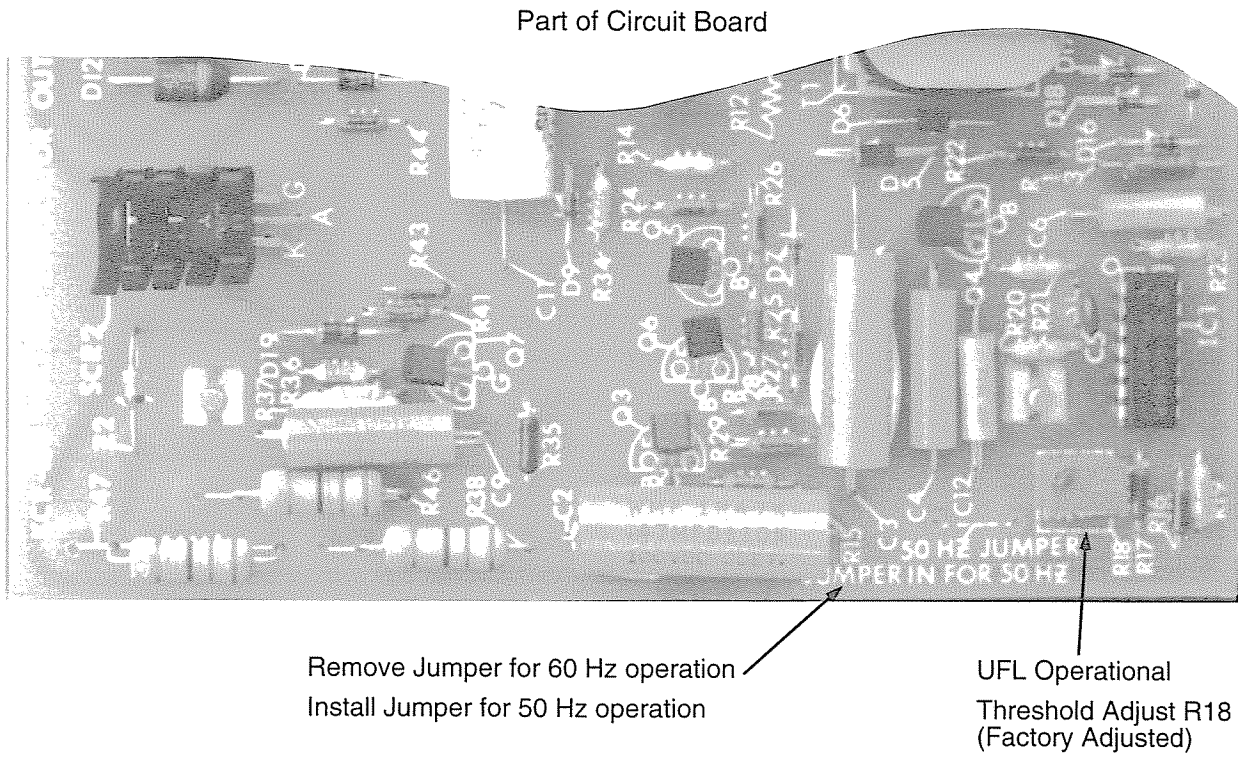

FIGURE 6-6 UNDERFREQUENCY LIMIT JUMPER WIRE

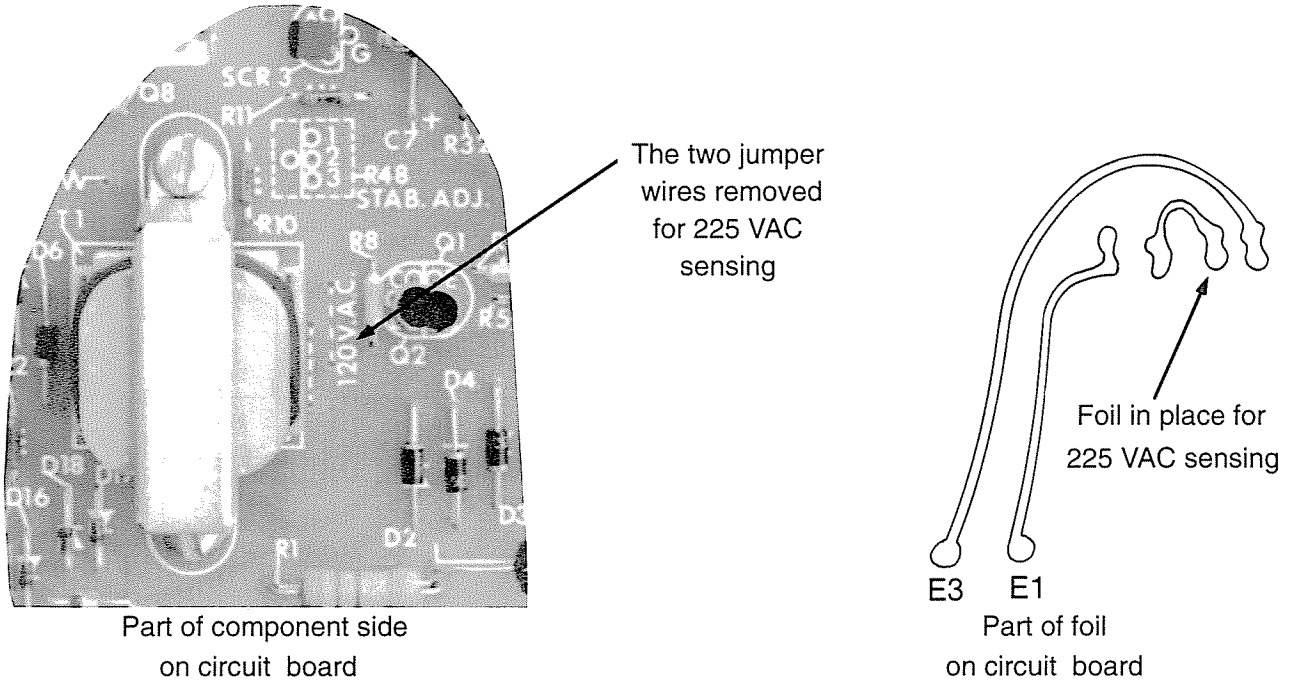

FIGURE 6-7 SENSING TRANSFORMER T1 CONNECTION FOR 225 VAC ± 15% SENSING

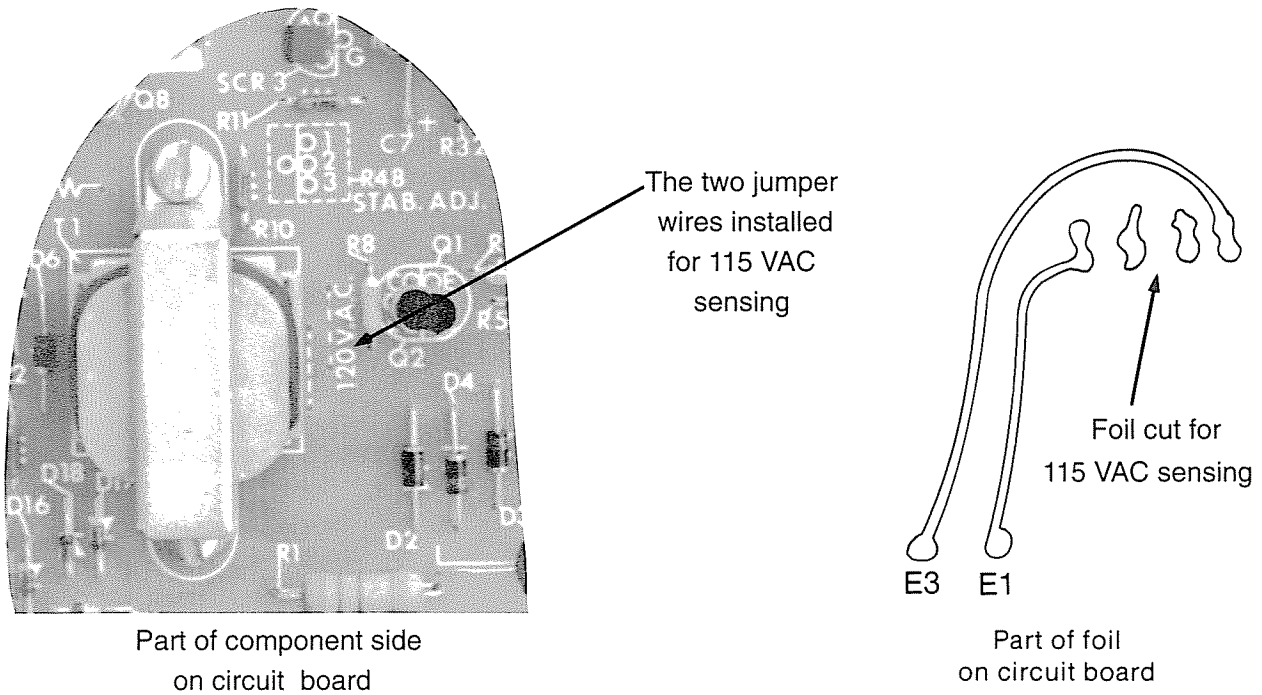

FIGURE 6-8 SENSING TRANSFORMER T1 CONNECTION FOR 115 VAC ± 15% SENSING

PROCEDURE

1. Ascertain sensing voltage (See Specifications).
2. Remove regulator from generating system and connect as shown in the appropriate drawing below.
3. Turn voltage adjust potentiometer (R2) screw adjustment to full counter-clockwise position.
4. Plug in regulator. Light should flash on momentarily.
5. Slowly turn voltage adjust (R2) screw adjustment clockwise. Before reaching complete clockwise setting the light should come on to full brillance.
6. At regulating point about 5 or 6 turns in voltage setting should turn the bulb on and off. (See Note)

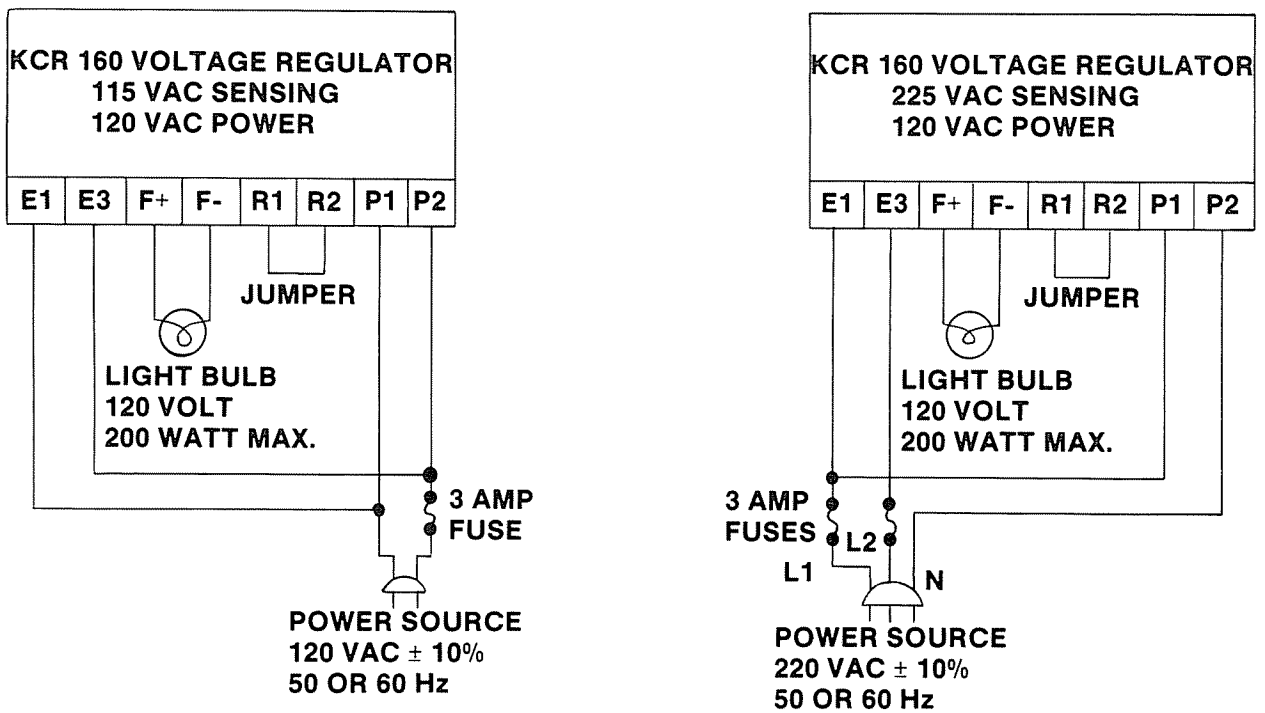

FIGURE 6-9 VOLTAGE REGULATOR OPERATIONAL TEST

Kato Engineering

P.O. Box 8447
Mankato, MN 56002-8447 U.S.A.
(507) 625-4011 / FAX (507) 345-2798
TELEX 29-0786 C.P.O. 390

RELIANCE ELECTRIC

Publication Date: 351-01001-00B
Publication Date: May 2002

INSTRUCTION MANUAL

KCR 360
VOLTAGE REGULATOR

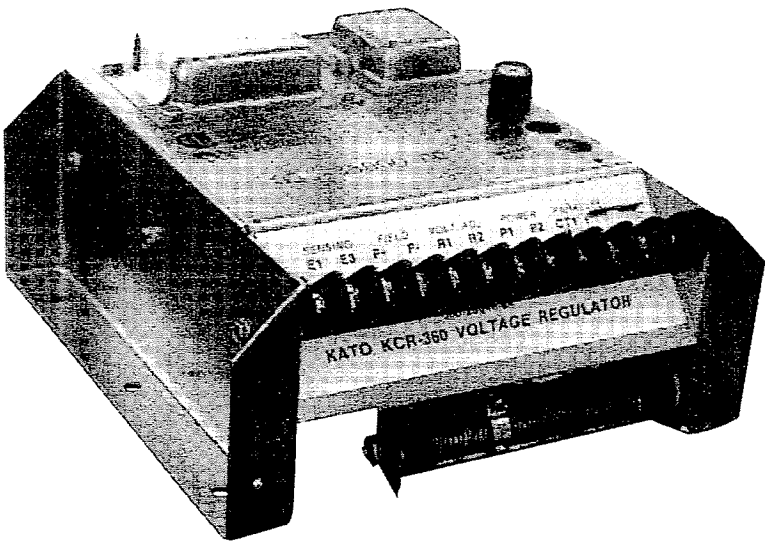

KATO Engineering Inc.

P.O. Box 8447
Mankato, MN 56002-8447
(507) 625-4011
Fax (507) 345-2798
www.kato-eng.com

SAFETY SUMMARY

Observe the safety precautions that follow and the instructions contained in this manual when installing, operating, testing and making repairs to this equipment.

WARNING

De-energize generator set starting circuit before making repairs, connecting test instruments or removing or making connections to or within the voltage regulator. Dangerous voltages are present at the voltage regulator terminal board and within the voltage regulator when the generator set is running. These include the sensing voltage, power to the voltage regulator and the voltage regulator output. Accidental contact with live conductors could result in serious electrical shock or electrocution.

Electromagnetic interference capacitors are connected between the line and ground. To eliminate electrical shock hazard the regulator chassis must be connected to the system power ground.

Fire hazard can exist if voltage regulator fuse is larger than 8 ampere or delay type fuse is used.

CAUTION

Regulator sensing circuit must never be opened while power is applied to the regulator input power terminals. Loss of sensing voltage will result in maximum regulator output.

The voltage regulator dc output (terminal F+ and F-) must never be opened during operation. To do so will produce inductive arcing that could destroy the exciter or voltage regulator. Therefore, never place circuit breaker contacts or voltage shutdown switch in the exciter field circuit.

CAUTION

Megger or high potential test equipment must not be used when testing the voltage regulator. Disconnect interconnecting conductors between the generator and voltage regulator when testing generator or exciter with megger or high potential test equipment. The high voltage developed by megger or high potential test equipment will destroy the solid state components within the voltage regulator.

Katolight Service - Master Repair Manual - Page 1280

TABLE OF CONTENTS

SECTION 1

GENERAL INFORMATION SPECIFICATIONS AND APPLICATION

	PAGE
GENERAL	1-1
APPLICATION	1-1
SPECIAL FEATURES	1-1
OPTIONAL FEATURES	1-2
ACCESSORIES	1-2
KCR 360 REGULATOR OPTION CHART	1-3
TABLE 1-1 STANDARD MODELS OF KCR 360 VOLTAGE REGULATOR	1-4
SPECIFICATIONS	1-5
FIG. 1-1 KCR 360 UNDERFREQUENCY PERFORMANCE	

SECTION 2

PRINCIPLES OF OPERATION

VOLTAGE REGULATOR CIRCUITS	2-1
A. Sensing Circuit Single Generator Operation	2-2
B. Sensing Circuit During Parallel Generator Operation In Reactive Voltage Droop Compensation Mode	2-2
C. Sensing Circuit During Parallel Generator Operation In Parallel Cross-Current Compensation Mode	2-3
D. Error Detector	2-4
E. Phase Control Circuit	2-5
F. Power Controller	2-5
G. Field Flashing Circuit	2-5
H. Stability Control	2-6
I. Underfrequency Limit (UFL)	2-6
J. Volts-Per-Hertz Sensing Option	2-7
K. Flat Regulation for Constant Voltage Variable Frequency Application	2-8

SECTION 3

INSTALLATION

MOUNTING	3-1
INTERCONNECTION	3-1
A. Sensing (Terminals E1 and E3)	3-2
B. Input Power (Terminals P1 and P2)	3-3
C. Grounding	3-3
D. Output Power (Terminal F+ and F-)	3-4
E. External Voltage Adjust Rheostat (Terminals R1 & R2)	3-4

Katolight Service - Master Repair Manual - Page 1281

F. Connection to Terminals CT1 and CT2 (Generator Operating Singly and Parallel) 3-4
G. Underfrequency Limit (UFL) 3-5
H. Voltage Regulator Fuse 3-5
ACCESSORY ITEMS 3-6
A. Voltage Shutdown (Engine Idle Switch) 3-6
B. Field Circuit Breaker 3-7
C. Auto/Manual Voltage Control 3-7

SECTION 4

ADJUSTING CONTROLS AND OPERATING PROCEDURE

GENERAL 4-1
ADJUSTMENTS 4-1
A. Generator Voltage Adjust Rheostat (VAR) 4-1
B. Nominal Voltage Range Set Adjust (R2) 4-1
C. Stability Adjustment (R6) 4-1
D. Parallel Voltage Droop Resistor (R1) 4-2
E. Underfrequency Adjustment (R55) 4-2
F. Manual Voltage Control Variac 4-3
FIELD FLASHING 4-3
SINGLE UNIT INITIAL OPERATION PROCEDURE 4-4
A. Automatic Mode Operation 4-4
B. Manual Mode Operation 4-6
PARALLEL OPERATION 4-7
A. Metering 4-7
B. Checks Prior to Initial Parallel Operation 4-8
C. Preliminary Operation 4-8
D. Paralleling Generators 4-9
E. Shutting Down One or More Generators Operating Parallel 4-11
TABLE 4-1 VOLTAGE ACROSS UFL TERMINALS AT 60 HZ 4-12
TABLE 4-2 VOLTAGE ACROSS UFL TERMINALS AT 50 HZ 4-12

SECTION 5

MAINTENANCE, TROUBLESHOOTING AND REPLACEMENT PARTS

PREVENTIVE MAINTENANCE 5-1
CORRECTIVE MAINTENANCE 5-1
VOLTAGE REGULATOR OPERATION TEST 5-1
REPAIR SERVICE AND REPLACEMENT PARTS 5-2
TROUBLESHOOTING 5-2
TABLE 5-1 TROUBLESHOOTING CHART 5-3
TABLE 5-2 REPLACEMENT PARTS LIST 5-10

Katolight Service - Master Repair Manual - Page 1282

SECTION 6

DRAWINGS

GENERAL		6-1
FIG. 6-1	KCR 360 VOLTAGE REGULATOR OUTLINE	6-1
FIG. 6-2	KCR 360 VOLTAGE REGULATOR ELECTRICAL SCHEMATIC	6-2
FIG. 6-3	UNDERFREQUENCY LIMIT (UFL) ELECTRICAL SCHEMATIC	6-3
FIG. 6-4	PARALLEL VOLTAGE DROOP CT'S INTERCONNECTION	6-4
FIG. 6-5	CROSS-CURRENT COMPENSATION CT'S INTERCONNECTION	6-5
FIG. 6-6	TYPICAL KCR 360 VOLTAGE REGULATOR AND BRUSHLESS GENERATOR INTERCONNECTION	6-6
FIG. 6-7	VOLTAGE REGULATOR OPERATIONAL TEST CONNECTION DIAGRAM	6-8
FIG. 6-8	CHANGE IN SCR PHASE ANGLE WITH CHANGE IN PHASE CONTROL CIRCUIT PEDESTAL VOLTAGE	6-9

Katolight Service - Master Repair Manual - Page 1283

SECTION 1

GENERAL INFORMATION, SPECIFICATIONS AND APPLICATION

GENERAL

The KCR 360 voltage regulators consist of transformers, transistors, silicon diodes, silicon controlled rectifiers (SCR's), integrated circuits, resistors and capacitors. The regulators are relatively unaffected by humidity, temperature, vibration or shock and are not subject to wear from moving parts. Solid state components rather than relays are used in the regulator field flashing and underfrequency circuit, eliminating the possiblity of contact arcing or contact failure.

APPLICATION

KCR 360 series voltage regulators control generator output voltage by regulating the amount of current to the exciter field. The maximum continuous output rating of this series of voltage regulators is 65 Vdc, 5 amperes, with one-minute field forcing capacity of 90 Vdc, 7 amperes. They are designed primarily for 50/60 Hz or 400 Hz brushless generators up to 400 kW that have exciter field resistance of not less than 10 ohms or more than 400 ohms. KCR 360 voltage regulator specifications are given in this section.

SPECIAL FEATURES

The KCR 360 voltage regulators have silicon controlled rectifiers (SCR's) in the output stage. Electromagnetic interference (EMI) filtering in the output circuit reduces the conducted interference generated by the SCR power stage to negligible levels.

KCR 360 voltage regulators, except when the flat regulation option or volts per hertz sensing option is specified, include a very precise solid state underfrequency limit. The underfrequency limit protects the generator and exciter during underspeed operation. At speed below the predetermined frequency where limiting begins, the decrease in voltage is proportional to the decrease in frequency.

The KCR 360 series of voltage regulators also includes solid state field flashing and parallel operation components. The paralleling input is isolated for use during parallel generator operation in either the voltage droop mode or cross-current compensation mode.

Katolight Service - Master Repair Manual - Page 1284

OPTIONAL FEATURES

Optional features available in the KCR 360 series voltage regulator are given in the list that follows. The optional feature or features required must be listed on the purchase order when ordering the voltage regulator.

A. Special UFL Underfrequency Operational Threshold

For use with turbo charged engine driven generator sets. Typically 48 Hz for 50 Hz operation; 58 Hz for 60 Hz operation.

For different setting or application state required operational threshold in purchase order.

B. Volts Per Hertz Sensing

C. Flat Regulation

For motor-generator set application where voltage must remain constant and for variable frequency/constant voltage application.

D. Special Sensing Voltage or Frequency

For applications where sensing voltage or frequency requirements differ from those listed in specifications.

ACCESSORIES

A description of the accessories that are available is contained in the list that follows:

A. Power Isolation Transformers and Voltage Matching Power Transformer.

Kato Engineering power isolation transformers are designed specifically for voltage regulators that have silicon controlled rectifiers in the output stage. They are available with 120 Vac primary windings and 120 Vac secondary windings for power isolation. Voltage matching power transformers that also provide power isolation are available for applications when 120 Vac cannot be obtained from the generating system. Voltage matching power transformers are also available for use in applications where it is necessary to reduce the generator output voltage to the level required by the voltage regulator sensing transformer. As an example, for use with three or four wire 4160 Vac generator, a transformer is required that has a 4160 Vac primary and either a 600, 480, 416, 240, 208 or 120 Vac secondary.

Katolight Service - Master Repair Manual - Page 1285

B. Paralleling Current Transformers

A complete line of current transformers designed specifically for parallel generator operation is available. When consulting the factory be sure to give generator's rated voltage, kVA, and full load line current.

C. Field Circuit Breaker

The field circuit breaker opens power to the voltage regulator (terminal P1 or P2). The circuit may be either the type that trips when dc excitation is excessive or the type that measures generator line current through a current transformer and trips when line current is excessive. The field circuit breaker can be manually tripped during underspeed operation or emergency voltage shutdown.

D. Auto/Manual Voltage Control

Kato auto/manual voltage control modules are for use with regulators used in brushless generator applications. The module includes a full wave rectifier, a variable transformer (variac) for manual voltage control and a three-position switch. The switch allows the generator to be controlled either automatically by that voltage regulator or manually. The OFF position provides voltage shutdown by de-energizing both the voltage regulator and the manual voltage control rectifier.

E. Engine Idle Switch (Voltage Shutdown Switch)

This switch disconnects power to voltage regulator (terminal P1 or P2). The switch should be included in engine generator set systems when the voltage regulator does not have underfrequency limit circuitry or when the system does not include a field circuit breaker or auto/manual voltage control option.

KCR 360 VOLTAGE REGULATOR OPTION CHART

Standard KCR 360 voltage regulators are shown in Table 1-1. To use this table to identify the KCR 360 model you have received, find the part number of your regulator on the part list located near the back of your instruction book. The table shows the operating characteristics of each regulator. Be sure to use this information when contacting Kato Engineering for regulator repair or replacement.

Katolight Service - Master Repair Manual - Page 1286

TABLE 1-1

STANDARD MODELS OF KCR 360 VOLTAGE REGULATOR

Regulator Part Number	Sensing	Sensing* Response	Power	No Flashing	Special Comments
821-36000-00	50/60Hz	Flat	50/60Hz		
821-36000-04	50/60Hz	Flat	50/60Hz	X	
821-36000-98	50/60Hz	Flat	50/60Hz		Note 1
821-36000-99	50/60Hz	Flat	50/60Hz		Note 1
821-36001-00	50/60Hz	55Hz UFL	50/60Hz		
821-36001-01	50/60Hz	55Hz UFL	50/60Hz		Note 2
821-36001-02	50/60Hz	58Hz UFL	50/60Hz		Note 3
821-36001-03	50/60Hz	55Hz UFL	50/60Hz		Note 4
821-36001-04	50/60Hz	55Hz UFL	50/60Hz	X	
821-36001-96	50/60Hz	55Hz UFL	50/60Hz		Note 5
821-36001-97	50/60Hz	55Hz UFL	50/60Hz		Note 6
821-36001-98	50/60Hz	55Hz UFL	50/60Hz		Note 7
821-36001-99	50/60Hz	55Hz UFL	50/60Hz		Note 1
821-36002-00	50/60Hz	Volts/Hz	50/60Hz		
821-36031-00	50/60Hz	55Hz UFL	400 Hz		
821-36050-00	50/60Hz	Flat	90-180Hz		Note 8
821-36200-00	400Hz	Flat	50/60Hz		
821-36200-04	400Hz	Flat	50/60Hz	X	
821-36200-84	400Hz	Flat	50/60Hz	X	Note 1
821-36201-00	400Hz	350Hz UFL	50/60Hz		
821-36201-04	400Hz	350Hz UFL	50/60Hz	X	
821-36201-99	400Hz	350Hz UFL	50/60Hz		Note 5
821-36230-00	400Hz	Flat	400Hz		
821-36231-00	400Hz	350Hz UFL	400Hz		
821-36232-00	400Hz	Volts/Hz	400Hz		
821-36331-00	400Hz	350Hz UFL	400Hz		
821-36401-00	80Hz	74Hz UFL	50/60Hz		
821-36401-01	100Hz	92Hz	50/60Hz		
821-36402-00	200Hz	Volts/Hz	50/60Hz		
821-36402-01	80Hz	Volts/Hz	50/60Hz		
821-36451-00	180Hz	165Hz UFL	180Hz		
821-36800-00	24 Vdc	Flat	50/60Hz		

* Where UFL values are listed as 55 or 58 Hz, operation is 60 Hz. See manual for modification to 50 Hz operation.
**For applications with full power available to the regulator.

Katolight Service - Master Repair Manual - Page 1287

NOTES FOR TABLE 1-1:

1. Special component values for stability on some applications.
2. Fuse removed to meet U.S. National Fire Protection Codes for operation in Class I Group D Division 2 Harzardous Environments. Regulator protection must be provided by an external hermetically sealed magnetic circuit breaker.
3. UFL set at 58 Hz for application on turbocharge engines.
4. For use on single phase 50/60 Hz generators. The current transformer burden is an external reactor, Kato P/N 859-51120-01.
5. Two coats of conformal coating on the circuit board for extra moisture protection.
6. Fuse is 5 amp to meet previous UL requirements. Regulator is now recognized with 8A fuse.
7. Underfrequency limit modified to withstand 300% overspeed.
8. Permanent Magnet Generator (PMG) power, 90-180 Hz.

SPECIFICATIONS

THe specifications that follow are applicable for KCR 360 series voltage regulators.

A. Sensing

Sensing is single phase and measures average voltage. Refer to "Optional Features" in this section when the voltage regulator includes special sensing option. Sensing requirements for standard 50/60 Hz and 400 Hz KCR 360 voltage regulators are as follows:

Frequency: 50/60 Hz or 400 Hz
Ac Voltage: 100-139, 200-228, 216-265, 375-458, 432-528, 540-600
Voltage Adjustment Range: 10%
Voltage Adjust Rheostat: External, 250 ohm, 2 watt minimum
Sensing Transformers Taps Marked: 120, 208, 240, 416, 480 and 600
Burden: 6 Va maximum

B. Input Power

Voltage: 100 to 139 Vac, single phase
Frequency: 50/60 Hz or 400 Hz
Burden: 600 Va maximum

NOTE: If correct voltage is not available or if field is grounded, a matching isolation transformer must be used.

NOTE: Minimum generator residual voltage for automatic field flashing is 6 Vac at terminals P1 and P2.

Katolight Service - Master Repair Manual - Page 1288

C. Power Output With 120 Vac Input Power

Voltage: 65 Vdc, maximum continuous; 90 Vdc, one-minute forcing
Amperes: 5 amperes, maximum continuous; 7 amperes, one-minute field forcing
Field Resistance: 10 ohms minimum, 400 ohm maximum
Fused: 8 amperes, ABC type fuse (See "Voltage Regulator Fuse" Section 3).

D. Paralleling

1 ampere for 6% droop, maximum burden 5 Va. Isolated for paralleling generator operation in either the reactive voltage droop mode or cross-current compensation mode. Set for 4% droop prior to shipment from factory.

E. Underfrequency Protection Underfrequency Limit

Except where an optional feature is included, the underfrequency limit (UFL) circuit will provide underfrequency protection by reducing voltage proportional to frequency (see Fig. 1-1). The frequency where limiting starts is as follows:

-55 Hz for 60 Hz systems
-45 Hz for 50 Hz systems
-350 to 360 Hz for 400 Hz systems

F. Regulator Accuracy

1% over full range of generator loading and at generator speed deviation up to 5% from rated.

G. Regulator Response

Less than 17 milliseconds.

H. Thermal Stability

Less than 1% for 40 degrees C change in ambient temperature.

I. Operating Temperature

-40 degrees C to +60 degrees C

J. Storage Temperature

-60 degrees C to +85 degrees C

Katolight Service - Master Repair Manual - Page 1289

K. Power Dissipation

Less than 35 watts at maximum continuous rating during single generator operation; less than 40 watts at maximum continuous rating parallel generator operation.

L. Electromagnetic Interference Suppression

KCR 360 voltage regulators include conducted electromagnetic interference filters in the voltage regulator input power circuit.

M. Shock

Tested to withstand up to 20G's in each axis.

N. Vibration

Tested to withstand 1.2G's from 6 to 26 Hz; 0.32 inch double amplitude from 26 to 52 Hz; 5G's from 53 to 150 Hz.

O. Construction

Steel chassis with welded seams, zinc plated per specification QQ-2-325, Type II, Class 2; circuit board is silicon resin conformal coated.

P. Dimensions

7 1/2 inches (199 millimeters) X 7 1/4 inches (184 millimeters) X 3 29/32 inches (100 millimeters).

Q. Weight

6.2 pounds (2.81 kilograms) net. 7 pounds (3.18 kilograms) shipping weight.

R. Mounting

Voltage regulator may be mounted in any position providing sufficient space about the unit for satisfactory cooling. Be sure shock and vibration do not exceed regulator specifications.

Katolight Service - Master Repair Manual - Page 1290

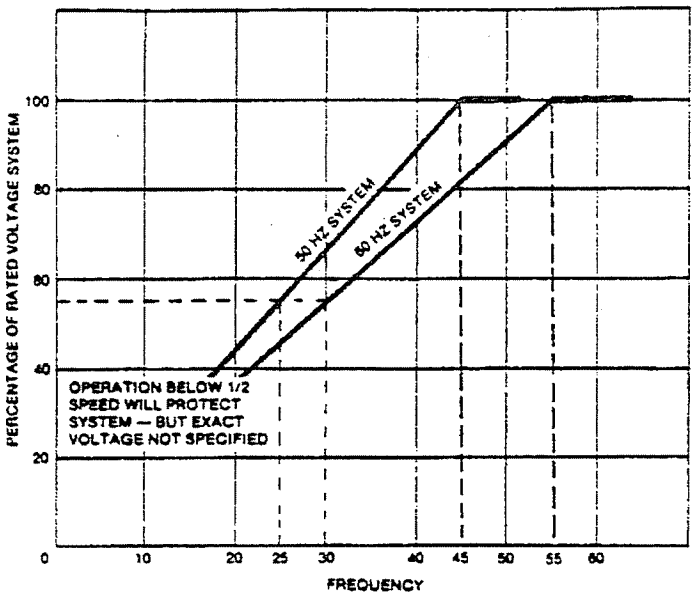

Fig. 1-1 KCR 360 Underfrequency Performance

NOTE: Voltage threshold for standard 50/60 Hz application. See Table 1-1 for optional variations.

Katolight Service - Master Repair Manual - Page 1291

SECTION 2

PRINCIPLES OF OPERATION

VOLTAGE REGULATOR CIRCUITS

Operation and function of the various regulator circuits is described in the paragraphs that follow.

The voltage regulator senses the generator voltage, compares a rectified sample of that voltage with a reference voltage and supplies the field current required to maintain the predetermined ratio between the generator voltage and the reference voltage.

The sensing circuitry also includes a transformer T2 and slide wire resistor R1. The transformer T2, resistor R1, and an external current transformer provide means of attaining reactive kVA load sharing during parallel generator operation. The parallel operation components do not affect voltage regulator operation when the generator is operated singly.

On regulators equipped with underfrequency limit (UFL), the underfrequency circuitry interacts with the regulator sensing and error detector in a manner that decreases voltage during underspeed operation. A solid state flashing circuit de-energizes when generator voltage has built up to about 70% of rated voltage output.

Operation of the various regulator circuits is described in detail in the paragraphs that follow. Most of the circuits are contained on a printed circuit board. Parts that are individually mounted on the regulator case are the sensing transformer T1, parallel operation transformer T2, parallel voltage droop slide-wire resistor R1, rectifier assembly DB1, SCR1, SCR2, and an electromagnetic interference filter. External voltage adjust rheostat VAR is provided for installation on a control panel. The circuitry described in the following paragraphs is shown on the electrical schematic of the voltage regulator (Fig. 6-2) and on the electrical schematic of the underfrequency limit circuitry (Fig. 6-3).

Katolight Service - Master Repair Manual - Page 1292

A. Sensing Circuit During Single Generator Operation

The voltage sensing transformer T1 provides a voltage proportional to the generator voltage output. This voltage is fed across the primary of T2 to a full wave rectifier comprised of silicon diodes D3 and D4. The rectified voltage is filtered by resistors R3 and R4, and capacitor C1. The dc signal from the filter is applied to the error detector and the underfrequency limit.

Shorting the secondary parallel operation transformer T2, either by using the jumper bar across CT1 and CT2 or setting unit/parallel switch to UNIT position (closed), eliminates the effect of T2 during single generator operation.

B. Sensing Circuit During Parallel Generator Operation in Reactive Voltage Droop Compensation Mode

Generators interconnected as shown in Fig. 6-4 for reactive voltage droop compensation will proportionally share inductive reactive loads during parallel operation by a decrease in generator system voltage. This method of kVAR load sharing is described in the paragraphs that follow.

Sensing transformer T1 provides a voltage proportional to the sensing voltage applied to regulator terminals E1 and E3. A current transformer (CT) installed in line 2 of the generator develops a signal that is proportional in amplitude and phase to the line current. The signal develops a voltage across the slide-wire parallel voltage droop adjust resistor R1. The tap on R1 supplies part of this voltage to the primary of transformer T2.

The voltage developed in the secondary of T1 and the voltage developed in the secondary of T2 add vectorially. This action provides a voltage to the rectifier that is the vector sum of the stepped down sensing voltage and the parallel current transformer signal through T2. The sensing rectifier dc output is filtered and applied to the error detector and underfrequency limit.

When a resistive (unity power factor) load is connected to the generator, the voltage that appears across the droop resistor leads the sensing voltage by 90 degrees, and the vector sum of the two voltages is nearly the same as the original sensing voltage; consequently, almost no change occurs in generator output voltage.

Katolight Service - Master Repair Manual - Page 1293

When lagging power factor (inductive) load is connected to the generator, the voltage across the droop resistor becomes more in phase with the sensing voltage, and the combined vectors of the two voltages result in a larger voltage being applied to the sensing rectifiers. Since the action of the regulator is to maintain a constant voltage at the sensing rectifiers, the regulator reacts by decreasing the generator output voltage.

When a leading power factor (capacitive) load is connected to the generator, the voltage across the droop resistor becomes out of phase with the sensing voltage and the combined vectors of the two voltages result in a smaller voltage being applied to the sensing rectifiers. Then the regulator reacts by increasing the generator voltage.

During parallel operation of two or more genrators interconnected for reactive voltage droop, if field excitation on one of the generators should become excessive and cause a circulating current to flow between the generators, the circulating current will appear as an inductive load to the generator with excessive excitation and a capacitive load to the other generator(s). The parallel components R1 and T1 will cause the voltage regulator of the generator with excessive field excitation to decrease excitation and generator voltage while the voltage regulators of the other generator(s) will react so as to increase excitation and generator voltage.

C. Sensing Circuit During Parallel Generator Operation in Parallel Cross-Current Compensation Mode

Parallel cross-current compensation allows two or more paralleled generators to share inductive reactive loads with no droop or decrease in the generator system output voltage when the line currents are proportional and in phase. This is accomplished by the action and circuity described previously for parallel reactive voltage droop compensation and the interconnection of the current transformer secondaries in a closed series loop as shown in Fig. 6-5. Circulating currents cause the system to react as described previously for parallel voltage droop compensation.

A unit/parallel switch connected in each generator system as shown in Fig. 6-5 eliminates the series resistance of the current transformers in shut down generator sets from the current transformers of the generator sets that are operating.

Katolight Service - Master Repair Manual - Page 1294

D. Error Detector

The error detector circuitry consists of a voltage adjust circuit, a voltage divider, a two-stage differential amplifier, and an internal minor feedback filter. The voltage adjust circuit consists of an external voltage adjust rheostat VAR, a voltage range adjustment R6, and fixed resistor R1. Full travel of the external voltage adjust provides 10% adjustment of the generator output voltage from nominal. The voltage range adjustment R6 establishes the maximum and/or minimum voltage adjust limit of VAR. The voltage adjust circuit and a voltage divider consisting of resistors R5 and R71 determine the input signal to the first differential amplifier.

The first differential stage is comprised of transistors Q1 and Q2, resistors R9 through R23, capacitor C3, zener diode Z1, and circuitry within the underfrequency limit. Underfrequency limit (UFL) provides a reference voltage to the base of transistor Q2 as described in "Underfrequency Limit" in this section. During generator operation at rated frequency the reference signal is constant and almost identical to the voltage across zener diode 21. Voltage from the sensing circuit which is proportional to the generator voltage is applied to the base of transistor Q1. When Q1 base voltage is different from the reference voltage applied to the base of Q2, there will be a difference in Q1 collector current with respect to Q2 collector current.

The current from the collector of transistor Q1 is divided by resistors R9 and R16 and injected into the base of the second stage differential amplifier transistor Q3. Similarly, the current from the collector of transistor Q2 is divided by resistors R14 an R15 and injected into the second stage differential amplifier transistor Q4. Resistors R10 and C3 help to prevent oscillations at high frequencies. The second stage differential amplifier amplifies the output of the first stage differential amplifier. Components included in the second stage differential amplifier are transistors Q3 and Q4, and resistors R24 through R27. The collector voltage of transistor Q3 controls the phase control circuit. The minor feedback filter consists of resistor R8 and capacitor C2. The filter removes any remaining ac from the dc signal.

Katolight Service - Master Repair Manual - Page 1295

E. Phase Control Circuit

The phase control circuit consists of diodes D5 and D6, resistors R28 through R32, capacitors C6 and C7, zener diode Z2 and programmable unijunction transistor (PUT) Q5.

The phase control circuit is a "ramp and pedestal" control that regulates the phase angle of the power controller circuit SCR's by controlling the "turn on" signal it supplies to the gate of the SCRs. An exponential ramp voltage that starts from a voltage pedestal provides the "turn on" gating signal. Because the ramp voltage starts from the voltage pedestal, a small change in the amplitude of the pedestal voltage results in a large change in SCR phase angle as illustrated in Fig. 6-8.

The amplitude of the pedestal voltage is determined by the collector current of second stage differential amplifier transistor Q3. Zener diode Z2 serves as a voltage clamp and resistors R31 and R32 are a voltage divider which determines the threshold of the programmable unijunction transistor Q5. The outputof PUT Q5 is applied to the gate of he power controller SCR's through resistors R43 and R44.

F. Power Controller

The power controller is the output stage of the voltage regulator. It is an SCR/diode bridge consisting of silicon controlled rectifiers SCR1 and SCR2 and a diode assembly DB1. The output of the power controller is regulated by the "turn on" gating signal its SCRs receive from the phase control circuit.

G. Field Flashing Circuit

The flashing circuit includes silicon controlled rectifier SCR1, field effect transistor (FET) Q6, transistors Q7 through Q9, resistors R34 through R46, diodes D7 through D10, and capacitor C8.

Transistors Q8 and Q9, and resistors R34, R36, R37, R38, R40 and R41 comprise a Schmidt trigger circuit. The Schmidt trigger turns on when an increasing voltage is present with magnitude approximately 70% of the nominal 24 Vdc output of the sensing rectifiers, and turns off when a decreasing voltage is present with magnitude of approximately 30% of the nominal output of the sensing rectifier.

Katolight Service - Master Repair Manual - Page 1296

E. Phase Control Circuit

The phase control circuit consists of diodes D5 and D6, resistors R28 through R32, capacitors C6 and C7, zener diode Z2 and programmable unijunction transistor (PUT) Q5.

The phase control circuit is a "ramp and pedestal" control that regulates the phase angle of the power controller circuit SCR's by controlling the "turn on" signal it supplies to the gate of the SCRs. An exponential ramp voltage that starts from a voltage pedestal provides the "turn on" gating signal. Because the ramp voltage starts from the voltage pedestal, a small change in the amplitude of the pedestal voltage results in a large change in SCR phase angle as illustrated in Fig. 6-8.

The amplitude of the pedestal voltage is determined by the collector current of second stage differential amplifier transistor Q3. Zener diode Z2 serves as a voltage clamp and resistors R31 and R32 are a voltage divider which determines the threshold of the programmable unijunction transistor Q5. The outputof PUT Q5 is applied to the gate of he power controller SCR's through resistors R43 and R44.

F. Power Controller

The power controller is the output stage of the voltage regulator. It is an SCR/diode bridge consisting of silicon controlled rectifiers SCR1 and SCR2 and a diode assembly DB1. The output of the power controller is regulated by the "turn on" gating signal its SCRs receive from the phase control circuit.

G. Field Flashing Circuit

The flashing circuit includes silicon controlled rectifier SCR1, field effect transistor (FET) Q6, transistors Q7 through Q9, resistors R34 through R46, diodes D7 through D10, and capacitor C8.

Transistors Q8 and Q9, and resistors R34, R36, R37, R38, R40 and R41 comprise a Schmidt trigger circuit. The Schmidt trigger turns on when an increasing voltage is present with magnitude approximately 70% of the nominal 24 Vdc output of the sensing rectifiers, and turns off when a decreasing voltage is present with magnitude of approximately 30% of the nominal output of the sensing rectifier.

Katolight Service - Master Repair Manual - Page 1297

When the Schmidt trigger is off, FET Q6 is on, turning on transistor Q7 which supplies current to fire slave SCR1 located on the circuit board. Slave SCR1 fires the silicon controlled rectifiers SCR1 and SCR2 in the regulator power controller circuit which, when on, supply current to the exciter field.

When the Schmidt trigger turns on, FET Q6 turns off. This action turns off transistor Q7 which removes the gating signal to slave SCR1 and in turn the gating signal of the flashing circuit from the power controller SCRs.

Resistor R70 and capacitor C19 provide assistance in the firing of the power controller SCRs. Capacitor C8 and resistor R45 assist in limiting conducted EMI. Diodes D8, D9 and those in DB1 supply power to the flashing and phase control circuits. Diode D10 is a free-wheeling diode for inductive load transient voltage suppression.

H. Stability Control

The stability circuit is a rate feedback RC network. It consists of capacitors C4 and C5, resistors R7, R19 and R20, and stability adjust potentiometer R6. This RC network injects a stabilizing signal from the regulator output which helps to prevent generator voltage oscillation.

I. Underfrequency Limit (UFL)

The UFL provides a reference voltage to the error detector which is constant when the generator output frequency is higher than a predetermined limiting frequency. When the generator is operating slower than the predetermined limiting frequency, the UFL will provide the error detector with a reference voltage that is proportionally lower.

The reference voltage to the UFL is supplied by zener diode Z1. The predetermined frequency where limiting starts for standard 50 Hz, 60 Hz and 400 Hz KCR 360 regulators is given in Section 1. The operation of the various components comprising the UFL assembly is described in the paragraphs that follow.

The voltage from the sensing transformer is rectified by diodes D1 and D2 and the rectified signal is applied to a Schmidt trigger consisting of opertional amplifier IC2A, and resistors R47 through R51. A square wave is generated at the output of IC2A at double the frequency of the sensing voltage. This square wave is differentiated by capacitor C11 making a fast rise time pulse for each input square pulse.

Katolight Service - Master Repair Manual - Page 1298

A nor gate integrated circuit IC1, resistors R53, R58 and R59, diode D11 and capacitor C12 make up the monostable multivibrator. The monostable multivibrator output pulse is uniform in amplitude and duration for each input pulse. Thus, the average voltage level of the collective pulses at the output of the monostable multivibrator is directly proportional to the frequency of the pulses.

The output of the monstable multivibrator is fed into a four-pole Butterworth low pass filter comprised of operational amplifier IC2B and IC2C, resistors R60 through R66, and capacitors C13 and through C18. This filtering circuit does the actual averaging of the collective pulses from the monostable multivibrator.

Diode D12 and integrated circuit IC2D form a voltage clamping circuit. If the voltage from the Butterworth filter is equal to or greater than the zener reference, the UFL output to the error detector will be the same as the zener reference and the UFL will have no effect on regulator operation. However, when the voltage from the filter decreases as occurs during underspeed operation of the generator, the reference voltage applied to the error detector is less than the zener reference. This action will cause the error detector differential signal to increase in a manner that results in a proportionally later turn on signal to the regulator output SCR's. The regulator then decreases excitation and a lowering of generator output voltage occurs.

A resistive network consisting of resistors R54 and R56 and potentiometer R55 determines the frequency where underfrquency limiting begins. Zener diode Z3 and capacitors C9 and C10 protect the integrated circuits from damage should excessive voltage spikes occur.

J. Volts Per Hertz Sensing Option

Where this option is included, the volts per hertz circuitry interconnections within the regulator are the same as the UFL circuit shown on Fig. 6-2. The volts per hertz circuitry is identical to the UFL circuitry shown in Fig. 6-3, except R67 is omitted, R68 is installed, and D12 is replaced with a jumper. IC2D then operates as a buffer amplifier. The output voltage to the error detector will be proportional to the generator frequency. Where the volts per hertz option is provided, voltage will be proportional to frequency from rated frequency down to approximately one-half rated frequency.

Katolight Service - Master Repair Manual - Page 1299

K. Flat Regulation For Constant Voltage Variable Frequency Application

Where this option is included, the underfrequency limit circuitry (UFL) shown in Figs. 6-2 and 6-3 is not included. A fixed reference voltage from zener diode Z1 and across resistor R17 is applied to the reference side of the error detector (transistor Q2). Where this option is included, a decrease in frequency will not result in drop in voltage. Minimum frequency that can be attained while maintaining rated voltage will depend on voltage regulator capacity and saturation characteristics of the exciter and generator.

Katolight Service - Master Repair Manual - Page 1300

SECTION 3

INSTALLATION

MOUNTING

The voltage regulator can be mounted in any position without affecting its operating characteristics. Sufficient space should be retained about the regulator for heat dissipation, making electrical connections and controls adjustments. The voltage regulator can be mounted in any location where shock and vibration is not excessive and the temperature is not excessive.

INTERCONNECTION

The regulator must be connected to the generator system as instructed in this section and as shown in the connection diagram provided with the generator set. An overall outline drawing that shows the location of regulator mounting provisions and identifies parts of the voltage regulator is contained in Section 6. Also contained in Section 6 are typical interconnection diagrams and an electrical schematic of the voltage regulator. Number 14 gauge or larger wire should be used for connections to the voltage regulator.

WARNING

DE-ENERGIZE GENERATOR SET STARTING CIRCUIT BEFORE MAKING REPAIRS, CONNECTING TEST INSTRUMENTS OR REMOVING OR MAKING CONNECTIONS TO OR WITHIN THE VOLTAGE REGULATOR. DANGEROUS VOLTAGES ARE PRESENT AT THE VOLTAGE REGULATOR TERMINAL BOARDS AND WITHIN THE VOLTAGE REGULATOR WHEN THE GENERATOR SET IS RUNNING. THESE INCLUDE THE SENSING VOLTAGE, POWER TO THE VOLTAGE REGULATOR AND THE VOLTAGE REGULATOR OUTPUT. ACCIDENTAL CONTACT WITH LIVE CONDUCTORS COULD RESULT IN SERIOUS ELECTRICAL SHOCK OR ELECTROCUTION.

Katolight Service - Master Repair Manual - Page 1301

CAUTION

MEGGER OR HIGH POTENTIAL TEST EQUIPMENT MUST NOT BE USED WHEN TESTING THE VOLTAGE REGULATOR. DISCONNECT INTERCONNECTING CONDUCTORS BETWEEN THE GENERATOR AND VOLTAGE REGULATOR WHEN TESTING GENERATOR OR EXCITER WITH MEGGER OR HIGH POTENTIAL TEST EQUIPMENT. THE HIGH VOLTAGE DEVELOPED BY MEGGER OR HIGH POTENTIAL TEST EQUIPMENT WILL DESTROY THE SOLID STATE COMPONENTS WITHIN THE VOLTAGE REGULATOR.

A. Sensing (Terminals E1 and E3)

Standard KCR 360 voltage regulators have a internal sensing transformer provided with taps on the primary winding for sensing voltages of 100 to 139, 200 to 228, 216 to 265, 375 to 458, 432 to 528 and 540 to 600 Vac. The transformer taps are identified with the corresponding nominal voltages which are 120, 208, 240, 416, 480, and 600 Vac. To obtain proper operation, sensing connections must be made as follows:

1. Internal wire from voltage regulator terminal E3 must be connected onto the correct tap on sensing transformer T1.

2. For operation with generator voltages above 600 volts, a potential transformer of metering quality must be used to supply the regulator sensing voltage. The sensing circuit load is less than 6 VA and correct polarity must be maintained to the voltage regulator sensing input.

3. For precise voltage regulation, the sensing leads should be connected as close as possible to the point where regulation is desired. The regulator regulates according to the voltage that is applied to its sensing terminals. Therefore, it cannot correct for voltage drop in leads that may occur at points beyond the point where regulator sensing is obtained. The leads that supply regulator sensing should not be used to supply power to any other equipment or to the regulator power stage.

Katolight Service - Master Repair Manual - Page 1302

CAUTION

REGULATOR SENSING CIRCUIT MUST NEVER BY OPENED WHILE POWER IS APPLIED TO THE REGULATOR INPUT POWER TERMINALS. LOSS OF SENSING VOLTAGE WILL RESULT IN MAXIMUM REGULATOR OUTPUT.

4. In applications where regulator sensing leads are connected beyond the output side of the generator circuit breaker and when regulator power is obtained from the generator, the leads that provide regulator power must be connected at points beyond the output side of the generator circuit breaker.

5. If the generator is to be operated in parallel with other generators, the phase relationship of sensing voltage and the parallel operation current transformers is very important. (Refer to "Connection to Terminals CT1 and CT2" in this section).

B. Input Power (Terminals P1 and P2)

The voltage regulator operates from single phase 100 Vac to 139 Vac input power applied to terminals P1 and P2. If the correct voltage is not available or if the field is grounded, a power isolation transformer must be used. The transformer is not furnished with the regulator but can be ordered from Kato Engineering Company.

WARNING

ELECTROMAGNETIC INTERFERENCE CAPACITORS ARE CONNECTED BETWEEN THE LINE AND GROUND. TO ELIMINATE ELECTRICAL SHOCK HAZARD THE REGULATOR CHASSIS MUST BE CONNECTED TO THE SYSTEM POWER GROUND.

C. Grounding

The power input leads are electromagnetic interference filtered. A good electrical power ground is not necessarily a good interference ground. Ground leads should be as short as possible, preferably of copper strap with a width 1/5 the length. Grounding the system to earth ground makes all grounds common.

Katolight Service - Master Repair Manual - Page 1303

D. Output Power (Terminals F+ and F-)

The field resistance must not be less than 10 ohms and correct polarity must be maintained between the regulator output and exciter field. Because the regulator output leads are not connected to any part of the system except the exciter field, they are not filtered. To minimize conducted EMI the leads should be kept as short as possible and shielded. Effective shielding can be attained by routing both leads through 1/2 inch conduit. In general, not more than one or two feet of field leads should be unshielded. If the voltage regulator is installed within the generator outlet box, it is possible to achieve satisfactory results with short unshielded leads.

E. External Voltage Adjust Rheostat (Terminals R1 and R2)

Terminals R1 and R2 are provided for connection of the voltage adjust rheostat. The rheostat provides adjustment of the regulated generator voltage $\pm$10% of nominal. It is provided as a separate item for panel mounting. Connecting wires from the rheostat attach to terminals R1 and R2. A jumper wire must be connected between the rheostat wiper arm terminal and the rheostat terminal that is common with regulator terminal R2.

F. Connection to Terminals CT1 and CT2 (Generators Operating Singly and Parallel)

The KCR 360 voltage regulator is supplied with a jumper across terminals CT1 and CT2. Electrical connections to terminal CT1-CT2 are as follows:

For generator operating singly, the jumper bar must be installed across terminals CT1 and CT2.

For parallel operation of generators, the jumper bar must be removed and the secondary of a current transformer must be connected to terminals CT1 and CT2. The current transformer is connected in the generator line that does not supply sensing to the regulator and should deliver one ampere secondary current at rated load. The phase relationship of the current transformer signal to the regulator sensing voltage must be correct or the systems will not parallel properly. Figs. 6-4 and 6-5 show the correct polarity for A-B-C (1-2-3) phase rotation. If the phase sequence is not A-B-C (1-2-3) the current transformers secondary leads must be interchanged.

Katolight Service - Master Repair Manual - Page 1304

1. Reactive Voltage Droop - Connect the current transformer to its respective regulator as shown in Fig. 6-4.

2. Cross-Current Compensation - For cross-current, connect each CT to its respective regulator. Then connect the finish of the first CT to the start of the second CT, the finish of the second CT to the start of the third CT, etc. Continue until all CT's are connected in series and connect the finish of the last CT to the start of the first CT (See Fig. 6-5).

   On parallel cross-current compensation applications consisting of two or more generators, a unit/parallel switch should be used if all the generators are not always on the bus. If the switch is not used, a voltage droop will be introduced into the system which will cause the voltage of the incoming generator to fluctuate prior to paralleling. This is due to the unloaded generator parallel CT not supplying its compensating signal, but allowing a voltage drop to occur across it. Ideally, the switch is an auxiliary on the generator output circuit breaker that opens when the breaker is closed.

G. Underfrequency Limit (UFL)

The underfrequency limit components are located on the voltage regulator circuit board (see Figs. 6-2 and 6-3). Use of jumper wire J1 is as follows:

1. 50/60 Hz Sensing, Voltage Regulator Operating 60 Hz - Make certain jumper wire is installed across area marked J1. Wire is mounted on component side of circuit board and the ends of the jumper wire are soldered onto the film side of the circuit board.

2. 50/60 Hz Sensing, Voltage Regulator Operating 50 Hz - Make certain jumper wire J1 is removed. Remove J1 by cutting each end of the jumper wire.

3. 400 Hz Sensing Voltage Regulator - Make certain jumper wire J1 is installed.

H. Voltage Regulator Fuse

The voltage regulator contains an 8 ampere normal blow fuse in the voltage regulator input power circuit (see Fig. 6-2). In applications where voltage regulator power requirements are reduced, as when used with small generators where excitation is less than given, a smaller fuse may be used. Never install a fuse larger than 8 amperes and never install a delay type fuse.

Katolight Service - Master Repair Manual - Page 1305

CAUTION

FIRE HAZARD CAN EXIST IF VOLTAGE REGULATOR FUSE IS LARGER THAN 8 AMPERE OR DELAY TYPE FUSE IS USED.

ACCESSORY ITEMS

Accessory items provided with the generator system must be connected as shown on the wiring diagram provided with the generator set and the accessory item drawing or instruction. The precautions and general procedures that follow should be observed when connecting accessory items.

NOTE: On generator systems that include the auto/manual voltage control option, the OFF position on the AUTO/OFF/MANUAL selector switch provides voltage shutdown. On generator systems that include a field circuit breaker, manually tripping the circuit breaker OFF provides voltage shutdown.

CAUTION

NEVER INSTALL THE VOLTAGE SHUTDOWN SWITCH IN THE EXCITER FIELD CIRCUIT. THE VOLTAGE REGULATOR DC OUTPUT (TERMINALS F+ AND F-) MUST NOT BE OPENED DURING OPERATION.

A. Voltage Shutdown (Engine Idle Switch)

The system can be equipped with a switch to allow removal of excitation in an emergency or when the prime mover must be operated at reduced speeds. This switch must be placed in the input power line to the regulator (terminal P1 or P2).

CAUTION

THE VOLTAGE REGULATOR DC OUTPUT (TERMINAL F+ AND F-) MUST NEVER BE OPENED DURING OPERATION. TO DO SO WILL PRODUCE INDUCTIVE ARCING THAT COULD DESTROY THE EXCITER OR VOLTAGE REGULATOR. THEREFORE, NEVER PLACE CIRCUIT BREAKER CONTACTS IN THE EXCITER FIELD CIRCUIT.

Katolight Service - Master Repair Manual - Page 1306

B. Field Circuit Breaker

The field circuit breaker must be of the type that has separate terminals for the thermal element and the contacts. The circuit breaker thermal element can be either of the following types.

1. Field Current Heats the Thermal Element - The thermal element connects between the voltage regulator output and the exciter field.

2. Generator Line Current Heats the Thermal Element - The thermal element connects to a current transformer located in one of the generator load lines.

C. Auto/Manual Voltage Control

The auto/manual voltage control option includes the components described in the paragraphs that follow. Connect the auto/manual voltage control module as shown on the wiring diagram provided with the generator.

1. Three-Position Selector Switch - When switch is set to the AUTO position, power is fed across the switch contacts to regulator input power terminals P1 and P2. When switch is set to MAN position, power is fed across the switch contacts to the manual voltage control circuit rectifiers. OFF position opens input power to both the voltage regulator and the manual voltage control rectifiers.

2. Manual Voltage Control Circuit - The manual voltage control circuit consists of a full wave rectifier assembly and a manual voltage control variac. The manual voltage control variac controls generator output whenever the generator set is operated in the manual voltage control mode.

Katolight Service - Master Repair Manual - Page 1307

SECTION 4

ADJUSTING CONTROLS AND OPERATING PROCEDURE

GENERAL

This section contains procedures for controls adjustment, field flashing and initial operation for both single and parallel units. Before initial operation is attempted, verify that the regulator is connected for the application. (See wiring diagram provided with the generator set and review the procedures given in Section 3.)

ADJUSTMENTS

The adjustments pertaining to the voltage regulator and system operation are described in the paragraphs that follow. Except where noted, adjustment is made during initial operation and normally does not have to be repeated during the life of the voltage regulator.

A. Generator Voltage Adjust Rheostat (VAR)

This adjustment is provided to control the generator voltage. When set to its maximum counterclockwise position, minimum generator voltage is obtained. Maximum generator voltage is obtained when the rheostat is set to its maximum clockwise position.

B. Nominal Voltage Range Set Adjust (R2)

This adjustment is provided to extend the limits of the generator voltage adjust rheostat (VAR). Normally R2 is set to provide the generator voltage adjust rheostat with an adjustment range of ±10% of rated voltage. R2 is locaed on the circuit board section of the regulator and is adjustable through a hole in the top of the regulator case. A 5/16 inch hex-head locknut that keeps the potentiometer shaft from turning due to vibration must be loosened before attempting to adjust R2 with a small screwdriver. The locknut must be re-tightened after adjustment is complete.

C. Stability Adjustment (R6)

Stability control R6 provides for stable regulating operation by controlling the amount of feedback that is applied to the error detector stage. Turning the control counter-clockwise decreases the amount of the stability feedback, making the regulator respond faster.

Katolight Service - Master Repair Manual - Page 1308

This control is located on the regulator circuit board and is adjustable through a hole in the top of the regulator case. A 5/16 inch hex-head locknut that keeps the control shaft from turning due to vibration, must be loosened before attempting to adjust R6 with a small screwdriver. The locknut must be retightened after adjustment is complete.

Operate generator at rated frequency, no load, the point at which the Stability adjustment is most critical. Adjust STABILITY by first rotating control fully clockwise with screwdriver. Set STABILITY by rotating pointer counter-clockwise one quarter turn. This setting normally assures good stability, but may not provide optimum response time for the generator. If the generator voltage oscillates (hunts), the control should be turned clockwise past the point where oscillation stops. If faster response is required, rotate control counter-clockwise until voltage becomes unstable, then rotate clockwise until voltage is stable. Optimum adjustment is attained when generator voltage is stable and response is satisfactory at no-load and also during operation under any load up to the full load rating of the generator.

D. Parallel Voltage Droop Resistor (R1)

This adjustment is provided to control the voltage droop signal of generators operating parallel. It is located at the lower section of the regulator case. Maximum voltage droop is attained when the resistor is set to its maximum resistance position. Each generator that will be operated parallel should be adjusted for identical voltage droop as described in the "Initial Parallel Operation" procedure that follows. Adjustment is made by loosening the slider screw with a screwdriver, moving the slider and then tightening the slider screw after the adjustment has been made.

E. Underfrequency Adjustment (R55)

This adjustment is included in voltage regulators provided with the underfrequency limit option. R55 is adjusted at the factory as listed in Section 1 in this manual, or requested in the generator set purchase order.

1. Adjusting Underfrequency Limit when generator frequency can be set to the desired breakpoint.
   a. Connect accurate voltmeter between circuit board terminals TP1 and TP2.
   b. Run generator at the desired Underfrequency Limit set point (for example 58Hz).
   c. Adjust R55 for zero volts as indicated on the meter.

2. Adjusting Underfrequency Limit when generator frequency can not be adjusted.
   a. Connect accurate voltmeter between circuit board terminals TP1 (negative) and TP2 (positive).

Katolight Service - Master Repair Manual - Page 1309

b. Run generator at rated speed and voltage.
c. Determine the desired Underfrequency Limit setting voltage from Table 4-1 for 60 Hz generators or Table 4-2 for 50 Hz generators.
d. Adjust R55 until the voltage between TP1-TP2 equals the test voltage given in the appropriate table. EXAMPLE: With unit running at 60 Hz and where limiting is desired at about 55 Hz, voltage across TP1-TP2 should be -0.438 V dc.

3. Run generator at rated speed.

4. Adjust R55 to position where voltage across TP1-TP2 equals the test voltage given in the appropriate table.

Example: When unit is running at 60 Hz and limiting is desired at about 55 Hz, voltage across TP1-TP2 should be -0.360 Vdc. Voltage across TP1-TP2 will then drop to zero when speed is decreased to 55 Hz.

F. Manual Voltage Control Variac

This control is inclued in generator sets equipped with the automatic/manual voltage control option. During generator set operation using the manual voltage control mode, the mode selector is set to the MAN position and generator voltage output is controlled by the manual voltage control variac. In order to maintain generator output voltage at a constant level during operation in the manual voltage control mode, the manual voltage control variac must be adjusted each time a change in load occurs (either added or shed).

FIELD FLASHING

CAUTION

DO NOT ATTEMPT TO FLASH THE EXCITER FIELD WHILE THE GENERATOR SET IS RUNNING. BE CAREFUL TO OBSERVE POLARITY WHEN CONNECTING FLASHING SOURCE.

The voltage regulator contains an internal solid state field flashing circuit. A minimum of about 6 Vac at the regulator input power terminals is required for operation of the flashing circuit. Usually the exciter field poles retain sufficient magnetism to allow circuit operation and generator voltage buildup. However, if flashing is required, stop the generator and then flash field as given in the procedure that follows.

1. Connect the negative lead of a 12 or 24 Vdc flashing source onto regulator terminal F-. Do not remove any other wires from terminal F-.

Katolight Service - Master Repair Manual - Page 1310

2. Slide the positive lead of the flashing source onto regulator terminal F+. Only a few seconds flashing should be necessary.

3. Slide the flashing source positive lead off terminal F+. Then remove flashing source negative lead from terminal F- and tighten terminal.

4. Start generator and check for satisfactory voltage buildup.

SINGLE UNIT INITIAL OPERATION PROCEDURE

Before operating the generator for the first time, doublecheck to make certain all wiring connections are made correctly. Review the wiring diagrams provided with the generator set, the installation instructions contained in Section 3 and the adjustment procedures given in preceding paragraphs.

When the generator set is equipped with the automatic/manual voltage control option, normal operation of the generator set is the automatic voltage control mode. During generator set operation in the automatic voltage control mode, generator output voltage is pre-established during no-load operation by adjustment of the external voltage adjust rheostat and automatically maintained at that amplitude under all load conditions from no-load to full rated load by the voltage regulator.

A. Automatic Mode Operation

Review preceding paragraphs. Procedure for single unit automatic mode operation is given below.

1. If the generator set is equipped with the auto/manual control option, set the selector switch to the AUTO position.

2. Turn the voltage adjust rheostat to about half way between the maximum counterclockwise and maximum clockwise positions.

3. Open the output circuit breaker. Do not apply load until satisfactory no load operation is attained.

4. If a voltage shutdown switch or field circuit breaker is used, close the switch to connect input power to the voltage regulator.

5. On generators that will be operated parallel (and if the sets are equipped with unit/parallel switches) close the switch on all generators.

6. Start the prime mover and bring up to rated speed.

NOTE: Deviation in generator output voltage approximately ±10% of rated can be corrected by adjusting the voltage adjust

Katolight Service - Master Repair Manual - Page 1311

rheostat and if necessary, the voltage range set adjust (see "Adjustments " in this section).

7. Verify generator voltage. Any of the following conditions can occur:

   a. No Voltage Build-up -- If this condition exists, exciter may not have sufficient residual magnetism. Flash field as given in "Field Flashing" in this section.

   b. Overvoltage (+15% or more) -- If this condition occurs, open the shutdown switch immediately and/or stop the prime mover. Determine the cause of overvoltage.

   c. Undervoltage (-15% or more) -- If this condition occurs, open the shut down switch immediately and/or shut down the prime mover. Determine the cause of undervoltage.

   d. Undervoltage by Operation of the Underfrequency Limit Circuit (UFL) -- The underfrequency circuit is designed to operate when generator frequency decreases about 10% below rated frequency. The nominal setting of the under frequency circuit is given in Section 1. Undervoltage by operation of the underfrequency circuit can occur if the prime mover governor is not adjusted to maintain rated speed or when the underfrequency limit circuit is adjusted to operate at a frequency that is very close to the rated frequency of the generator.

   e. Voltage Begins to Build Up and Collapses -- If this condition exists, stop the prime mover and determine the cause of collapse. Refer to troubleshooting procedure.

   f. Oscillating Voltage (Hunting) -- If this condition occurs, verify that prime mover speed is not fluctuating. Then, if condition persists, adjust the stability adjust (R6) according to instructions in this section.

8. Operate generator set for about one-half hour.

9. After about one-half hour of satisfactory operation, load may be applied as follows:

10. Close output circuit breaker and connect load.

11. Be sure generator output voltage is correct and stable. Be sure steady state voltage regulation is satisfactory (see Section 1).

Katolight Service - Master Repair Manual - Page 1312

12. Remove load.

13. If generator will be operating parallel, adjust the parallel operation resistor R1 as given in the steps that follow.

14. If generator set is equipped with unit/parallel switch, open the switch.

15. Monitor no-load voltage.

16. Apply inductive load and note the droop in generator voltage. A droop of about 6% is attained when R1 is set to maximum resistance and the current transformer second ary current is one ampere.

17. If droop is more than is required, set R1 for less resistance. If droop is less than is required, increase resistance across R1. (See "Parallel Voltage Droop Resistor" in this section.)

18. Repeat steps 15 through 17 as necessary to obtain required droop signal.

19. To stop unit, remove load, open output circuit breaker and then stop prime mover.

B. Manual Mode Operation

This test applies only to generator sets equipped with the auto/manual votlage control option. Normal operation of the generator set is the automatic voltage control mode. The manual voltage control mode provides a means of oeprating the set should the voltage regulator fail. The manual control should be tested for proper operation during the initial operation of the set and can be used to determine whether cause of system malfunctions are due to faulty generator or voltage regulator operation. Test the manual voltage control as follows:

1. Perform preceding automatic mode operating procedure.

2. Open output circuit breaker and if running, stop prime mover.

3. If included, close unit/parallel switch.

4. Set auto/off/manual selector switch to MAN position.

5. Set manual voltage adjust variac to the complete counterclockwise position.

6. Start prime mover and bring up to rated speed.

Katolight Service - Master Repair Manual - Page 1313

7. Turn manual voltage adjust variac to position where correct generator voltage is measured by the generator voltmeter.

8. Turn manual voltage adjust variac to position where voltmeter indicates generator voltage is about 5% higher than rated.

9. Close output circuit breaker and apply load.

10. Measure output voltage. If not correct, adjust the manual voltage adjust variac.

11. Repeat steps 8 and 10 each time load is increased.

12. Before shedding load, decrease generator voltage about 5% below rated.

13. Adjust manual voltage adjust variac to position where voltmeter indicates generator is producing required voltage.

14. Repeat steps 12 and 13 each time any part of the load is shed.

15. To stop generator set, follow steps 16 through 19.

16. Remove load and open generator circuit breaker.

17. Set voltage adjust rheostat for rated generator output voltage.

18. Stop prime mover.

19. Set auto/off/manual switch to AUTO position.

PARALLEL OPERATION

The paragraphs that follow describe the procedures to be followed to operate two or more generators in parallel. In generating systems equipped with the automatic/manual voltage control option, parallel operation should always be made in the automatic voltage control mode. NEVER ATTEMPT TO PARALLEL GENERATORS WHEN THE MODE SWITCH IS SET TO MAN POSITION.

A. Metering

In order to attain satisfactory paralleling and to check for proper parallel operation all generators should be equipped with the following monitoring equipment.

1. Ac voltmeter to measure generator output voltage (1 per set).

Katolight Service - Master Repair Manual - Page 1314

2. Ac voltmeter to measure bus voltage (1 per system).

3. Ac ammeter (1 per set).

4. Power factor or kVAR Meter (1 per set).

5. KW meter (1 per set).

6. Exciter field current dc ammeter (1 per set).

7. Synchroscope or a set of lights to indicate when units are in phase.

B. Checks Prior to Initial Parallel Operation

Before initial parallel operation review the procedures and checks that follow:

1. Be sure each generator is connected to the bus with the same phase rotation as that of the bus. This may be done using a phase rotation test instrument or an induction motor of known rotation during the initial single unit operation procedure.

2. Be sure the voltage regulating system of each generator is equipped with the parallel signal sensing transformer.

3. Make certain the paralleling signal at regulator terminals CT1 and CT2 have the proper phase rotation with that of the sensing voltage at terminals E1 and E3. Review "Sensing" and "Connection to Terminals CT1 and CT2." In applications where units are connected for reactive voltage droop, verify that the connection is made as shown in Fig. 6-4. Cross-current compensation application requires interconnection of the system as shown in Fig. 6-5.

4. Prior to operation, the slide wire of the parallel voltage droop resistor R1 on all regulators should be set for identical droop. This can be accomplished by testing each generator set, one at a time, as given in the Single Unit Initial Operation Procedure in this section.

C. Preliminary Operation

Before attempting to parallel two or more generator sets, individual sets should be tested to verify that paralleling features function properly. The test that follows may be used.

1. On generating systems equipped with the auto/manual control option, set switch to AUTO position.

2. Be sure the jumper bar has been removed from across regulator terminals CT1 and CT2.

Katolight Service - Master Repair Manual - Page 1315

3. ON generating systems equipped with unit/parallel switches, be sure that the switch on generator set being tested is set to PAR position (open) and verify that the switch for each remaining generator is set to UNIT position (closed).

4. Place the generator in operation as described in "Automatic Mode Operation." Observe procedure given in following steps 5 and 6.

5. Apply 25 to 100% unity power factor load to the set under test. Generator voltage should change less than 1% and the frequency should decrease if the governor is set for droop operation.

6. Apply a 25 to 100% 0.8 power factor inductive load. Voltage should droop. If the voltage rises instead of drooping, reverse CT leads. If droop is not correct adjust parallel droop resistor R1. (See "Parallel Voltage Droop Resistor" in this section.)

D. Paralleling Generators

These instructions for paralleling generators should be followed in sequential order. All instructions should be completely reviewed and understood before paralleling is attempted.

1. Set auto/off/manual switch on all generators to AUTO position (on generator set equipped with automatic/manual voltage control option).

2. On generating systems equipped with unit/parallel switches, set switch on unit being started (generator set No. 1) to PARALLEL position (open). Set switch on remaining generator sets to UNIT position (closed).

3. Start generator set No.1.

4. Adjust generator voltage and frequency to nominal.

5. Apply the load.

6. Verify satisfactory voltage regulation and make certain frequency is not fluctating.

7. Repeat preceding procedures 1 and 2 on generator set No. 2.

8. Start generator set No. 2.

9. Adjust generator set No.2 frequency and voltage to nominal.

Katolight Service - Master Repair Manual - Page 1316

10. Adjust speed of generator set No.2 slightly higher than that of generator set No. 1.

11. Observing the synchroscope (or lights), when generator No. 2 is in phase with generator No. 1, close the circuit breaker for generator No. 2.

12. Immediately after closing the circuit breaker, measure line current of generator No. 2. It should be well within the rating of the generator. Also, immediately after closing the circuit breaker, observe the kW or power factor meters. The following conditions could occur.

    a. A high ammeter reading accmpanied by a large kW unbalance. When this condition exists, the speed governor is either not adjusted correctly or is faulty.

    b. A high ammeter reading accompanied by large kVAR unbalance. When this condition exists, the voltage regulating system is either not adjusted correctly or is faulty.

13. Adjust the speed of generator set No.2 to the point where each generator is carrying the desired share of kW load. (See note following procedure 14.)

14. Adjust the voltage of generator No. 2 until the ammeter readings of both generators are near minimum. (See following note.)

NOTE: If kVAR or power factor meters are available, adjust voltage adjust rheostats for equal or proportional kVAR or power factor readings.
If the generators are equipped with power factor meters, alternately adjust the speed and voltage on No. 2 until the ammeter readings are proportional and the power factor readings are equal.

NOTE: To obtain best results, final adjustments should be made with full load on the bus.

15. With full load applied, readjust the speed and voltage of generator No. 2 until the desired load division is obtained.

NOTE: The best adjustment is obtained when each generator supplies the same percent of its rated current, the power factor readings are equal, or the sum of the ammeter currents is minimum.

16. In applications where three or more generators are to be operated parallel, repeat preceding procedures 7 through 15 for generator set No. 3, then No. 4, etc.

Katolight Service - Master Repair Manual - Page 1317

E. Shutting Down One or More Generators Operating Parallel

Before dropping one or more generators operating parallel from the line bus it is essential that the total load on the bus is reduced to equal to or less than the combined capacity of the generators remaining of the bus. Shut down one or more of generator sets operating parallel as follows:

1. Reduce load to combined capacity of generators remaining on the bus.

2. On systems where the prime mover governor is equipped with a manual speed adjust, the load can be shifted to generators remaining on the bus by reducing the speed of the generator set being dropped from the bus.

3. Open the circuit breaker on the generator set being taken off the bus.

4. Close its unit/parallel switch (on generator sets equipped with a unit/parallel switch).

5. Shutdown the prime mover.

6. In applications where three or more generators are operated parallel, repeat preceding procedure 1 through 5 for each generator set being taken off the bus.

Katolight Service - Master Repair Manual - Page 1318

TABLE 4-1

VOLTAGE ACROSS UNDERFREQUENCY LIMIT TERMINALS TP1-TP2 WITH GENERATOR RUNNING AT 60 HZ AND 240 VAC SENSING

DESIRED BREAK FREQUENCY	DC VOLTAGE TP1 TO TP2
60 Hz	0.000
59 Hz	-0.080
58 Hz	-0.140
57 Hz	-0.218
56 Hz	-0.291
55 Hz	-0.360
54 Hz	-0.454
53 Hz	-0.534
52 Hz	-0.540
51 Hz	-0.720
50 Hz	-0.797

NOTE: Jumper wire must be across J1 on 60 Hz system. Measured voltage mut be negative (-). Slight variatin in break frequency may exist due to circuit and meter tolerances.

TABLE 4-2

VOLTAGE ACROSS UNDERFREQUENCY LIMIT TERMINALS TP1-TP2 WITH GENERATOR RUNNING AT 50 HZ AND 200 VAC SENSING

DESIRED BREAK FREQUENCY	DC VOLTAGE TP1 TO TP2
50 Hz	0.000
49 Hz	-0.085
48 Hz	-0.177
47 Hz	-0.267
46 Hz	-0.364
45 Hz	-0.456
44 Hz	-0.558
43 Hz	-0.672
42 Hz	-0.789
41 Hz	-0.897
40 Hz	-1.008

NOTE: Jumper wire J1 must be removed duing 50 Hz operation. Measured voltage must be negative (-). Slight variation in break frequency may exist due to circuit and meter tolerances.

Katolight Service - Master Repair Manual - Page 1319

SECTION 5

MAINTENANCE, TROUBLESHOOTING AND REPLACEMENT PARTS

PREVENTIVE MAINTENANCE

The regulator should be periodically inspected to insure air flow is not restricted. Dirt, dust and other foreign material may be removed using low pressure (25 to 50 psi) compressed air. Connections between the regulator and system should be checked periodically to insure they are tight and free of corrosion.

CORRECTIVE MAINTENANCE

Repairs to the regulator can be made following the diagrams in Section 6. Warranty and repair service information is given in the paragraphs that follow. A list of replacement parts is contained in Table 5-2. Due to a protective conformal coating, repairs on the printed circuit board are difficult and should not be attempted. A test to determine if the regulator is operational is described below.

On generator sets equipped with the auto/manual voltage control option, operation of the generator set in the automatic voltage control mode can be compared with how well it operates in the manual votage control mode. Faulty operation in the automatic mode and satisfactory operation in the manual mode indicates a problem in the voltage regulator while faulty operation in both the automatic and manual voltage control modes means the problem is probably within the exciter or generator.

VOLTAGE REGULATOR OPERATIONAL TEST

Connect regulator as shown in Fig. 6-7. Perform operational test as follows:

1. Connect internal wire from terminal E3 to the 120 volt tap on sensing transformer T1.
2. Connect jumper across terminals CT1 and CT2.
3. Adjust the external voltage adjust for maximum resistance (complete counterclockwise position).
4. Connect light bulb across terminals F+ and F- and wires to terminal E1, E3, P1 and P2 as shown in Fig. 6-7.
5. Connect to 120 Vac power source.

Katolight Service - Master Repair Manual - Page 1320

6. Turn the external voltage adjust clockwise. Before reaching the maximum clockwise position the bulb should come on to near full brilliance.

7. At the regulating point a small change in adjustment of the external voltage adjust rheostat should turn the light on or off. If the light does not come on or stays on at full brilliance, the regulator is probably defective.

8. Before re-installing in generating system, connect regulator as it was before steps 1, 2, and 3.

REPAIR SERVICE AND REPLACEMENT PARTS

All repair and replacement part requests should be addressed to Kato Engineering, Parts and Service Department, 2075 Howard Drive, Mankato, MN 56001. Be sure to include regulator part number and serial number. This information is given in the parts list provided with the generator set. To order accessory items include the voltage regulator part number and generator data. See Table 5-2, Replacement Parts List, at the end of this section.

TROUBLESHOOTING

The more common generator system malfunctions, causes of the malfunction and appropriate repair procedure are listed in Table 5-1 that follows.

Incorrect electrical connections between the generator system and the regulator and poor electrical connctions are often the cause of system malfunction. Before assuming a failure of the generator or regulator has occured, check wiring against the wiring diagrams provided with the generator set and the instructions given in Section 3. Also make certain all connections are tight and free of corrosion.

Katolight Service - Master Repair Manual - Page 1321

TABLE 5-1

TROUBLESHOOTING CHART

SYMPTOM	PROBABLE CAUSE	REMEDY
Voltage does not build up to rated value.	Shutdown switch open.	Close switch.
	Fuse blown.	Replace fuse. If fuse blows again determine cause of overload.
	Auto/off/manual switch set to OFF position.	Set to AUTO position.
	Field circuit breaker open.	Close circuit breaker.
	No input power to terminals P1 and P2.	Correct wiring.
	Inaccurate generator voltmeter.	Test with test voltmeter. Calibrate or replace faulty meter
	Voltage too low at terminals P1 and P2.	Correct wiring.
	Low residual voltage (or reverse residual).	Flash field. See Section 4.
	Internal wire from terminal E3 not connected to correct tap on sensing transformer T1.	Correct wiring. See Section 4.
	Poor or no connection between exciter field and regulator terminals F+ and F-.	Correct wiring and check connections.
	Reverse polarity connections between exciter field and regulator terminals F+ and F-.	Connect correctly and flash field to restore residual.
	Prime mover not up to rated speed.	Bring up to speed.

Katolight Service - Master Repair Manual - Page 1322

	Open or incorrectly connected external voltage adjust rheostat.	Correct wiring. See Section 3.
	Voltage range set adjust R2 set too low.	Adjust R2. See Section 4.
	Shorted or open electromagnetic interference filter.	Replace filter.
	Faulty regulator power stage (SCR1, SCR2 or diodes DB1).	Test. If faulty, replace the regulator.
	Faulty printed circuit board.	Replace the regulator.
	Defective rectifiers in the exciter, defective exciter windings or defective generator.	Observe operation of the exciter and generator. Refer to generator instruction manual for additional information.
	Generator output heavily loaded.	Remove excessive load.
Voltage builds up until flashing circuitry operates, then oscillates between 1/3 to 2/3 rated voltage.	Faulty printed circuit board.	Replace regulator.
Voltage high; not controllable with volt. adjust rheo.	No voltage to terminals E1-E3.	Correct wiring.
	Open sensing transformer.	Correct wiring and check for open winding(s).
	Automatic/off/manual switch set to MAN position.	Set to AUTO position for automatic voltage regulation.

Katolight Service - Master Repair Manual - Page 1323

	External voltage adjust rheostat shorted.	Correct wiring. Use ohmmeter to test resistance across rheostat. Replace shorted rheostat.
	Internal wire from terminal E3 not connected to correct tap on sensing transformer T1.	Correct nominal sensing voltage from generator and wiring to transformer T1. See Section 3.
	Faulty regulator circuit board.	Replace regulator.
	Regulator power stage SCR's or diodes faulty.	Replace the voltage regulator.
Voltage high, controllable with voltage adjust rheostat.	Internal wire from terminal E3 to wrong tap on sensing transformer T1.	Connect wire to correct tap on T1.
	Improper connection of sensing to regulator terminals E1 and E3.	Correct wiring to regulator.
	Voltage range set adjust R2 set too high.	Adjust R2. See Section 4.
	Generator voltmeter inaccurate.	Connect a test voltmeter to check operation of generator output. Calibrate or replace the meter.
	Faulty SCR1 and SCR2.	Replace regulator.
	Faulty regulator circuit board.	Replace the voltage regulator.

Katolight Service - Master Repair Manual - Page 1324

Poor regulation.	Voltage at regulator terminals P1 and P2 too low at nominal generator voltage.	Raise input voltage to 100 to 139 Vac.
	In single generator set operation, jumper not installed across terminals CT1 and CT2.	Install jumper.
	Unit/parallel switch in parallel position during single generator operation.	For single generator operation place switch in UNIT position.
	Unit/parallel switch of generator not on the bus set to PAR position.	Set switch of generators not on the bus to UNIT position.
	Prime mover not up to rated speed or prime mover speed fluctuating.	Bring up to rated speed and/or adjust governor.
	Unbalanced load.	Balance load.
	Exciter field resistance too low and/or exciter field volts too low.	Add a series resistor. Resistance should not be less than 10 ohms. Voltage applied to the exciter field at no load should not be less than 10 Vdc and best operation generally occurs when voltage is about 20 Vdc during no load operation. The resistor must not limit regulator output during full load operation.
	Faulty regulator circuit board.	Replace the voltage regulator.
	Faulty regulator power stage diodes or SCR's.	Replace the voltage regulator.

Katolight Service - Master Repair Manual - Page 1325

Poor voltage stability.	Stability adjust R6 not adjusted for sufficient stabilizing signal.	Adjust R6 as given in Section 4.
	Frequency unstable.	Adjust prime mover governor.
	No-load field voltage or resistance too low.	See symptom "Poor Regulation."
	Voltage at regulator input power terminals P1 and P2 too low.	See symptom "Poor Regulation."
	Voltage fluctuated to point where flashing circuit energizes or de-energizes.	Replace the circuit board.
	Faulty circuit board or regulator power stage SCR's and/or diodes.	Replace voltage regulator.
	Fault in exciter or generator	Refer to generator manual.
Voltage recovery slow on load change.	Stability adjust R6 maladjusted.	Adjust R6. See Section 4.
	Slow prime mover response.	Consult speed governor manual.
	Exciter field resistance too high.	Resistance must not limit regulator output.
	Voltage regulator capacity less than exciter requirements due to incorrect regulator application.	Contact factory.
	Generator and/or prime mover overloaded.	Reduce load to rated.
Underfrequency limit (UFL) operates at too high or low frequency.	Prime mover needs adjustment.	Verify governor operation, adjust as required.

Katolight Service - Master Repair Manual - Page 1326

	Incorrect use of jumper wire J1.	Correct use of jumper wire is given in Section 3.
	Wrong voltage regulator	Contact factory.
	R55 (Fig. 6-3) not adjusted correctly.	Adjust R55. See Section 4.
No droop compensation can be obtained for parallel generators.	Jumper across terminals CT1 and CT2.	Remove jumper.
	Unit/parallel switch closed. (Set to UNIT position).	Set switch on generator sets to PAR position. Leave switch on any generators that will remain shutdown in the UNIT position.
	Parallel droop adjust R1 set to minimum droop position.	Increase resistance across R1 by adjusting its slider.
	Parallel CT does not supply the correct secondary current.	Consult factory, giving generators rated line current and voltage. Be sure ampere turns of generator line through transformer are correct.
Voltage rises instead of droops on application of inductive load.	Wrong polarity between parallel CT secondary leads and regulator terminals CT1 and CT2.	Interchange leads at terminals CT1 and CT2.
Parallel generators do not divide reactive kVAR load equally, resulting in circulating reactive current between generators.	Terminals CT1 and CT2 shorted by jumper or unit/parallel switch.	Remove jumper. Set switch to PAR position.

Katolight Service - Master Repair Manual - Page 1327

	Slider on droop resistor R1 set too low.	Adjust for increased droop by moving slider to position where resistance is increased across the resistor.
	Droop resistors on generators operating parallel set at different droop position.	Adjust R1 on all generators for identical droop. See Section 4.
	Wrong parallel CT or wrong ampere turns through the CT primary.	Consult factory, giving generator set details.
	Parallel CT not in correct generator line.	Verify wiring.
	Parallel CT polarity reversed.	Interchange CT secondary leads at regulator terminals CT1 and CT2.
Parallel generators do not divide kW load equally.	Improper setting of power sensing of governor.	Repair or replace governor.

Katolight Service - Master Repair Manual - Page 1328

TABLE 5-2

REPLACEMENT PARTS LIST

NOTE: Because of the difficulty of making repairs to conformal-coated circuit boards, replacement of board or regulator, rather than repair, is recommended.

PART NAME	PART NUMBER
KCR 360 Voltage Regulator	As given on nameplate.
Sensing Transformer T1.	855-63610-01
Parallel Operation Transformer T2.	855-11610-01
Parallel Operation Voltage Droop Adjust Resistor R1, 5 ohm ±10%, 50 watt.	866-15035-10
Electromagnetic Interference Filter	514-00404-97
External Voltage Adjust Rheostat, RV4 type, 1 3/32 inch diameter, 250 ohm, 2 watt	867-32522-80
or	
External Voltage Adjust Rheostat, 1 9/16 inch diameter, 250 ohm, 25 watt	867-32575-79
Printed Circuit Board Assembly	Consult factory. Regulator replacement is recommended.
Fuse, 8 amp ABC	515-01208-31. 8 amp maximum for regulator protection. See Section 3 "Voltage Regulator Fuse."
Fuse Holder	516-30004-00
Silicon Controlled Rectifier SCR1 or SCR2, 8 amp, 400 volt.	849-30401-00
Rectifier Assembly DB-1, 30 amp, 400 volt, center tapped, TO-3 case.	851-33416-90

Katolight Service - Master Repair Manual - Page 1329

SECTION 6

DRAWINGS

GENERAL

This section contains drawings and diagrams to facilitate installation, operation and maintenance of the voltage regulator. An interconnection diagram appropriate for the specific generating system is generally provided in the generator set manual.

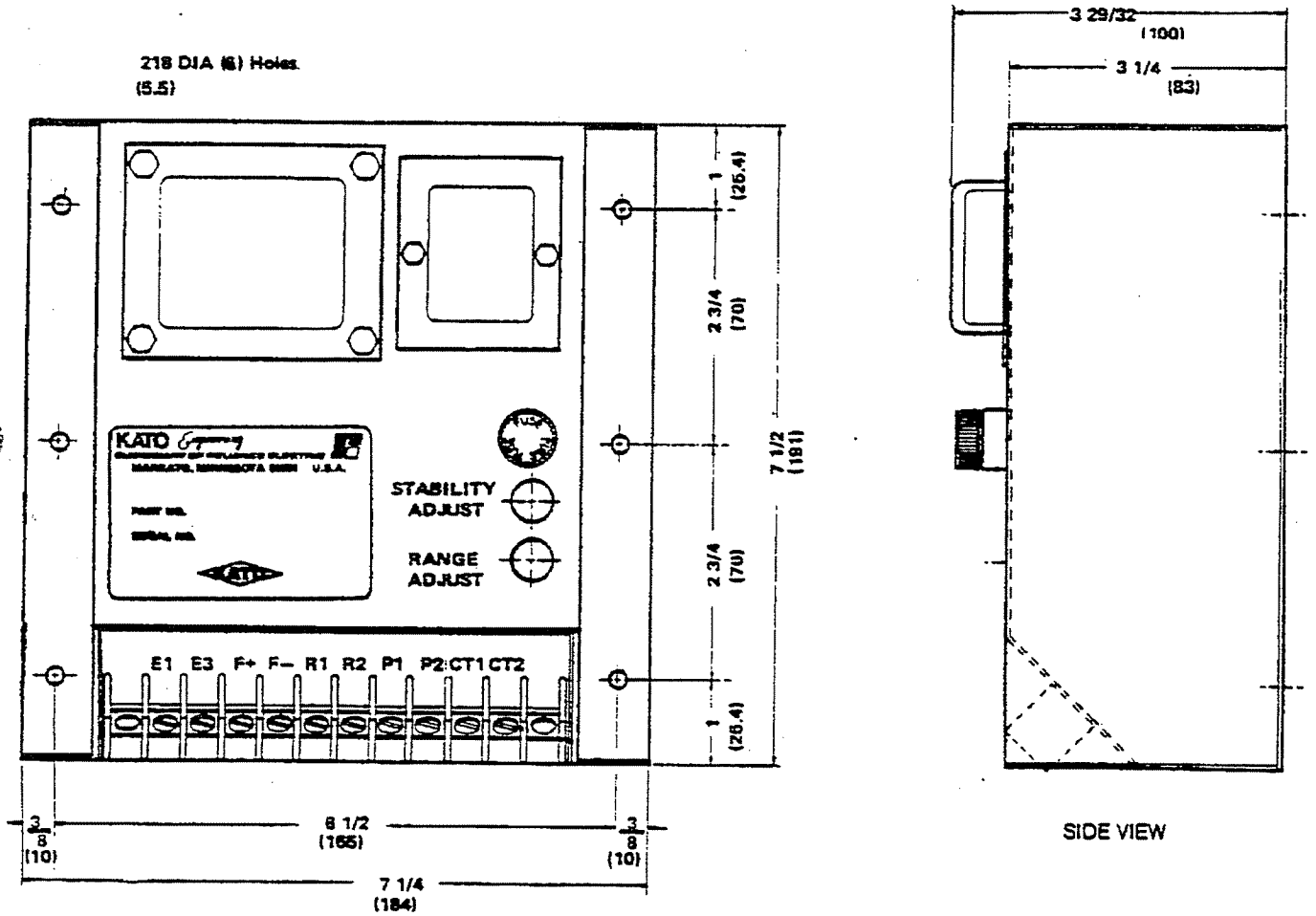

Weight: 6.2 Pounds
2.81 Kilograms

Dimensions given in inches and within parenthesis in millimeters

Fig. 6-1 KCR 360 Voltage Regulator Outline

Katolight Service - Master Repair Manual - Page 1330

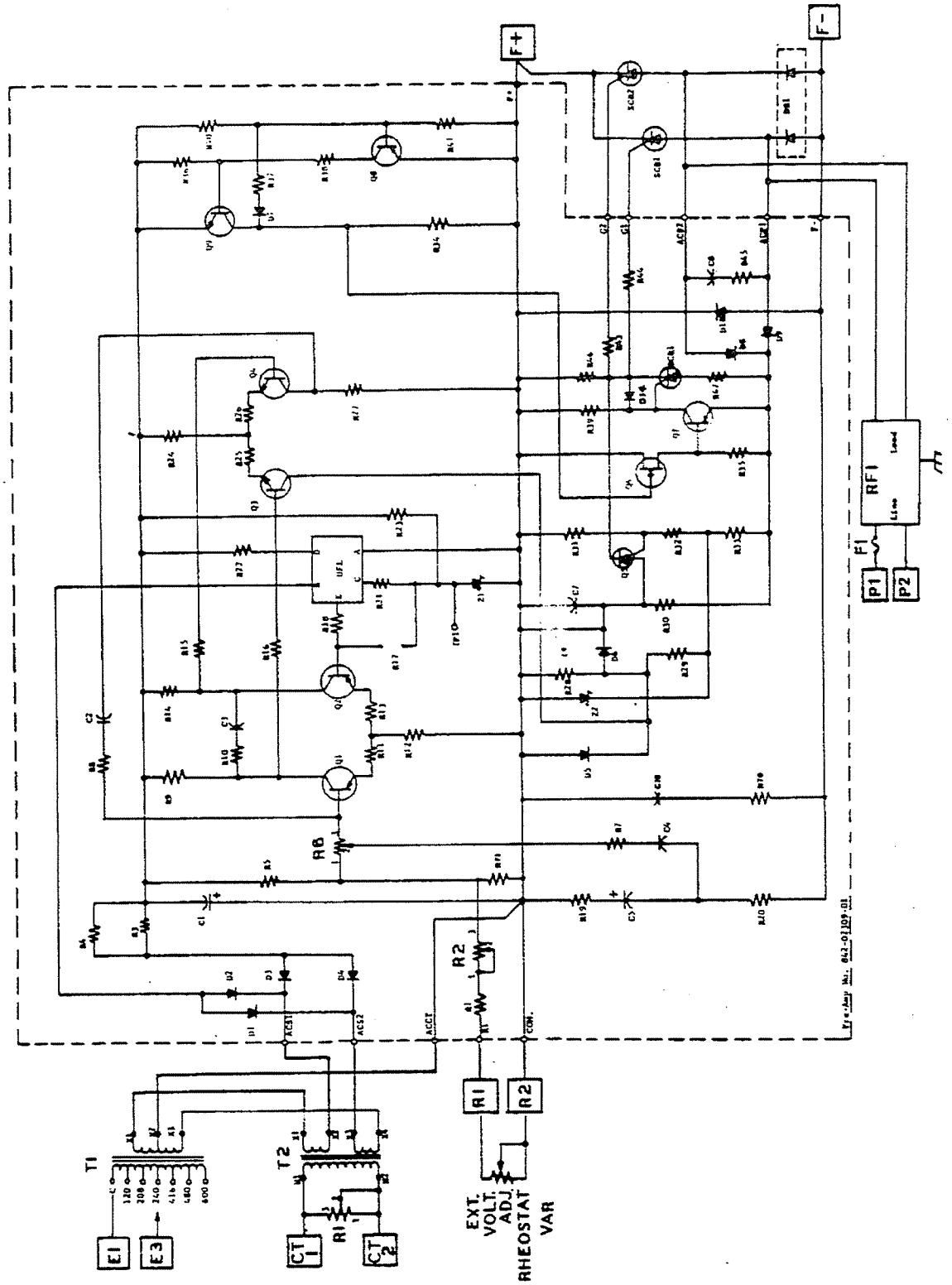

Fig. 6-2 KCR 360 Voltage Regulator Electrical Schematic

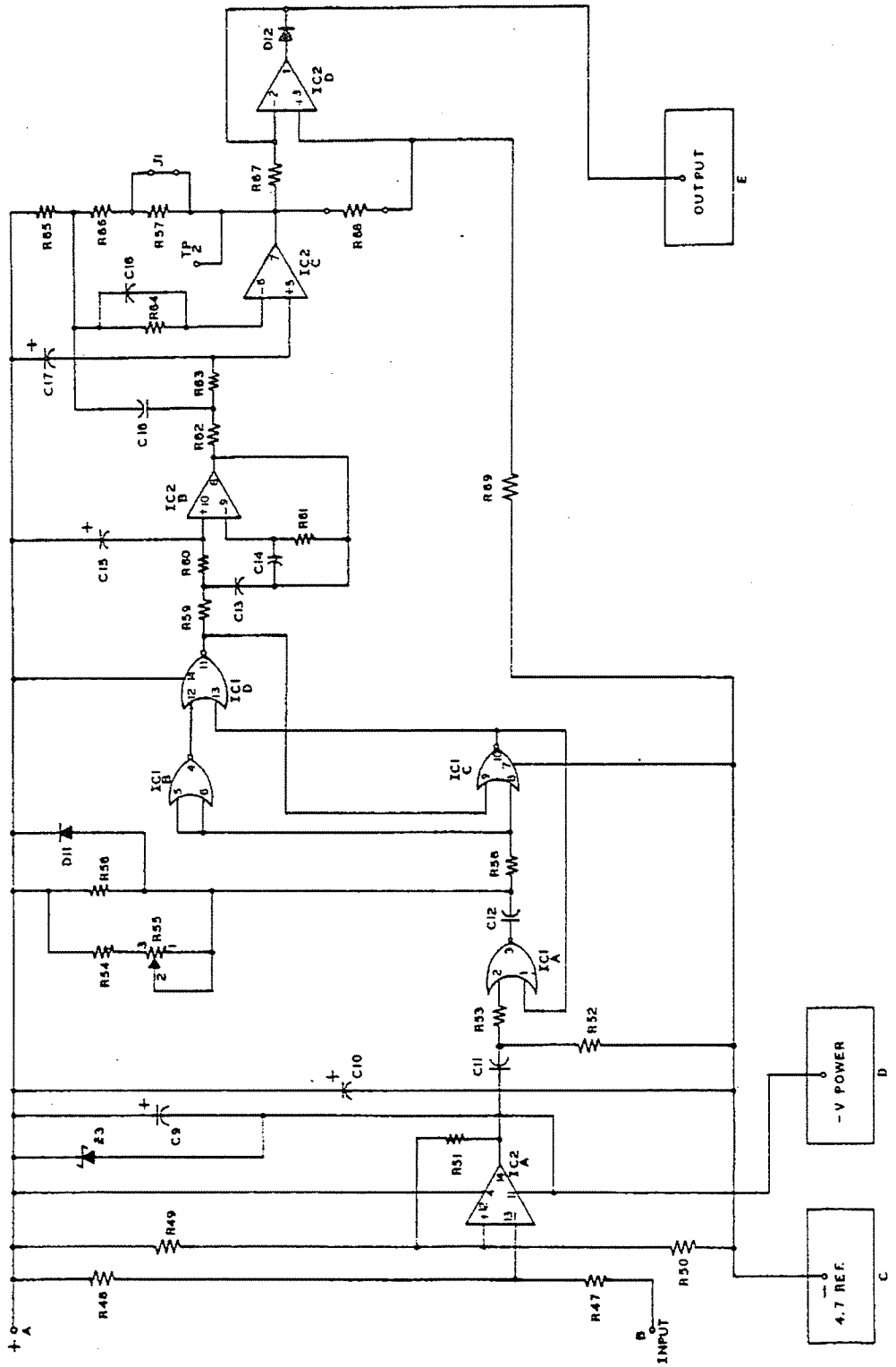

Fig. 6-3 Underfrequency Limit (UFL) Electrical Schematic

Katolight Service - Master Repair Manual - Page 1332

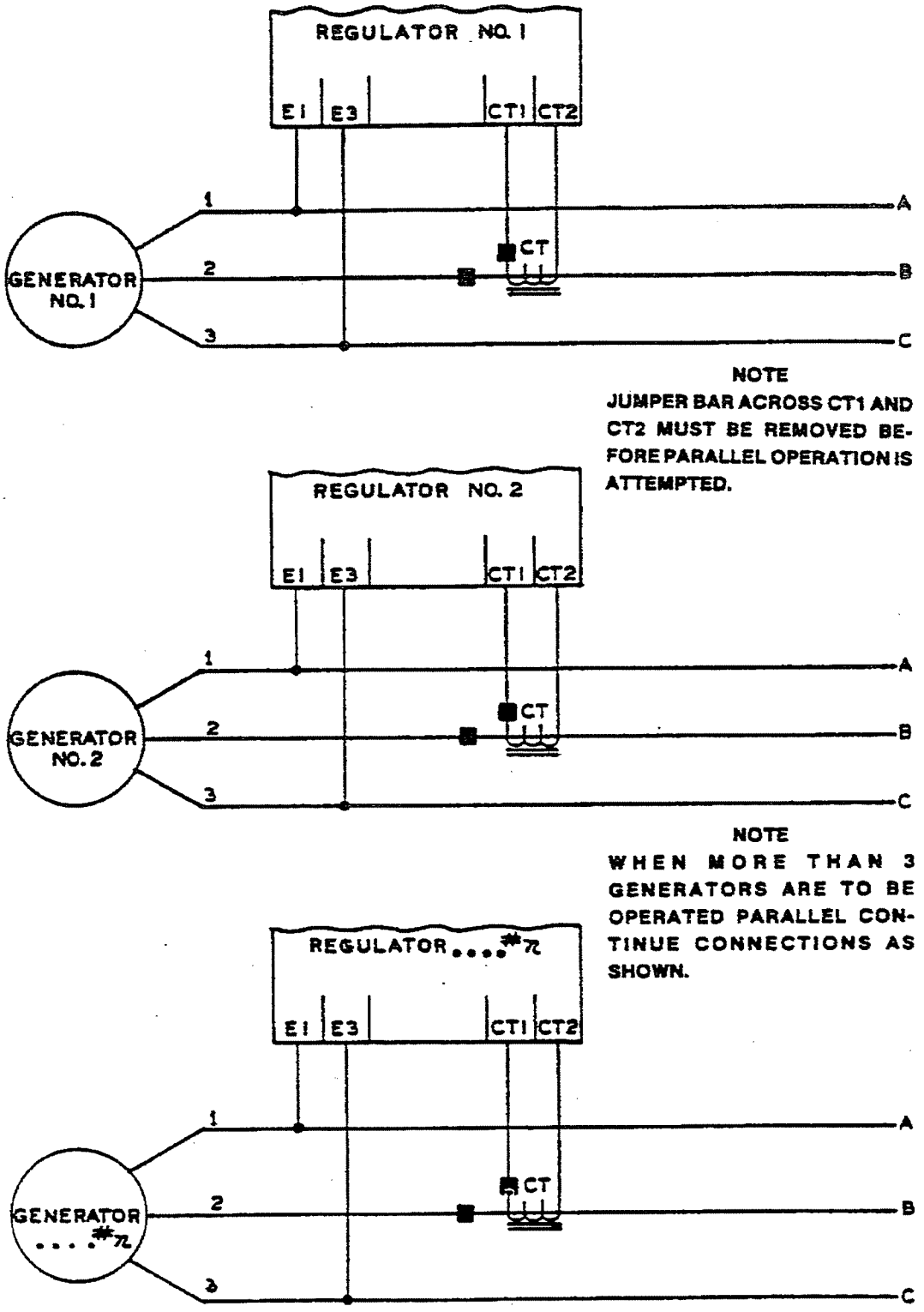

Fig. 6-4 Parallel Voltage Droop CT's Interconnection

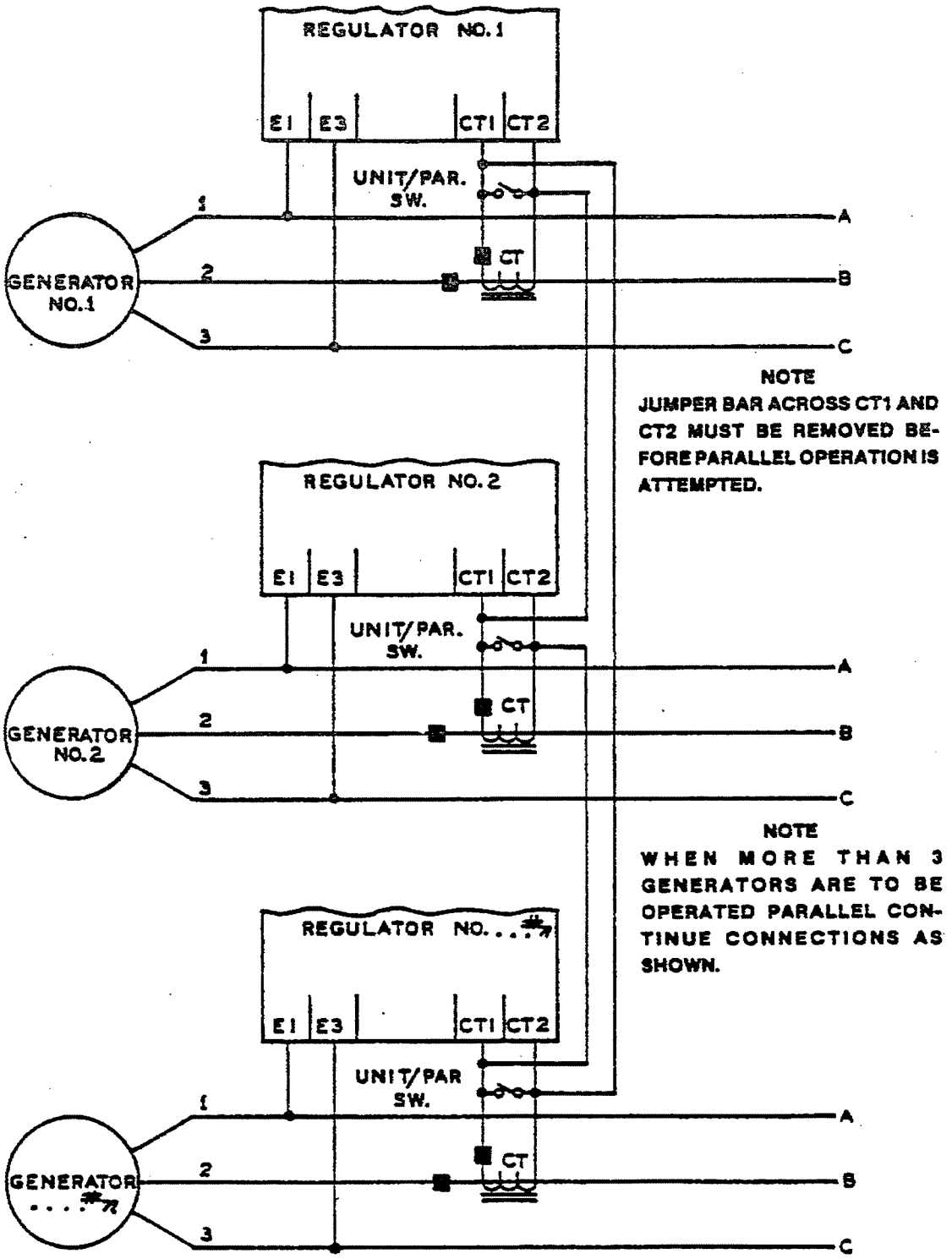

Fig. 6-5 Cross-Current Compensation CT's Interconnection

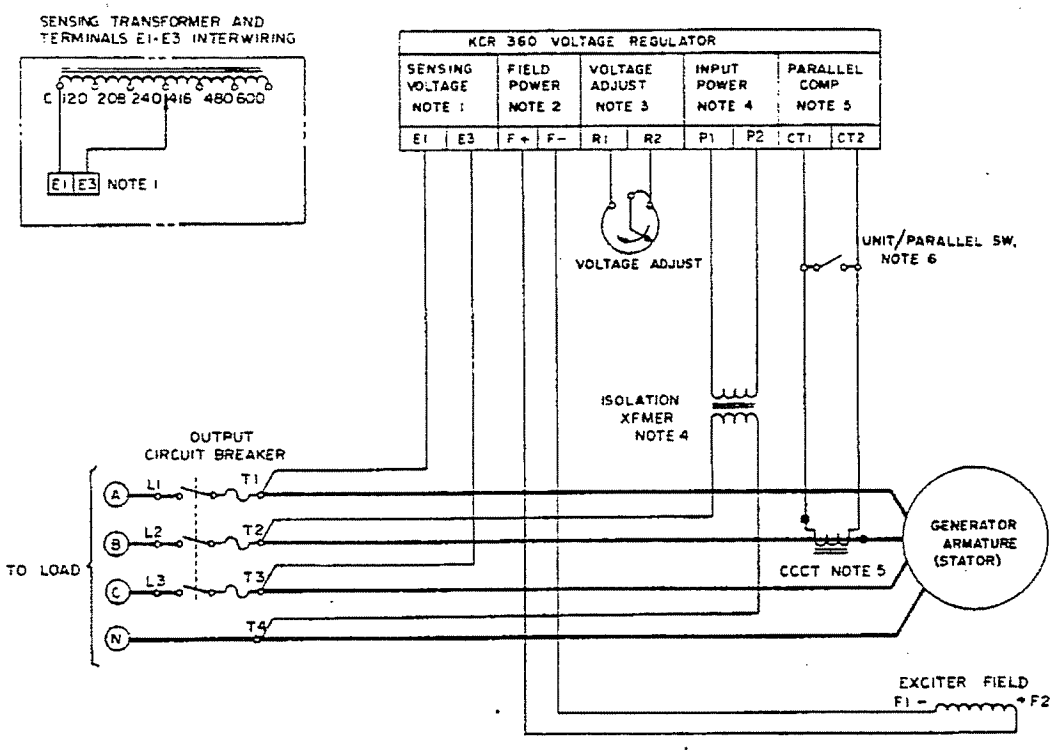

Fig. 6-6 Typical KCR 360 Voltage Regulator and Brushless Generator Interconnection

Sensing Transformer T1 Voltage
for 50 and 60 Hz Operation

Transformer Tap	120	208	240	416	480	600
Nominal Voltage Range	100-139	190-225	225-265	375-450	450-528	540-600

Katolight Service - Master Repair Manual - Page 1335

NOTES FOR FIGURE 6-6:

1. Sensing Voltage -- Determine nominal generator operating voltage. Connect the wire from regulator terminal E3 onto proper tap of the sensing transformer. Refer to the auxiliary view of the sensing transformer and the voltage chart.

2. Field Power -- The regulator maximum continuous rating is 65 Vdc, 5 amps. One minute field forcing capacity is 90 Vdc, 7 amps. The dc field resistance must not be less than 10 ohms. Resistance must be added in series if the field resistance is less than 10 ohms.

3. Voltage Adjust -- Voltage adjust is obtained by connecting a 250 ohm, 2 watt potentiometer to terminals R1 and R2. Potentiometer must have jumper from center (slider) terminal to its end terminal as shown in this drawing.

4. Input Power -- Input power must be single phase. 50/60 Hz, 100 to 139 Vac. A voltage matching transformer must be used if the correct voltage is not available at the generator. An isolation transformer must be used if the field is grounded or when a field flashing circuit which is grounded is included in the generator set regulating system.

5. Parallel Compensation -- Generators operating parallel must be equipped with current transformer CCCT. They may be connected for individual voltage droop as illustrated or interconnected for cross current compensation. Polarity is for A-B-C phase rotation. IF the phase sequence is A-C-B, reverse the current transformer secondary leads.

6. Unit/Parallel Switch -- On parallel cross-current compensation applications, a unit/parallel switch should be used if all the generators are not always on the bus. If the switch is not used, a voltage droop will be introduced into the system.

7. Regulators are provided with bar style jumper across terminals CT1 and CT2. Generators operating singly require the jumper across terminals CT1 and CT2. Remove jumper for parallel operation.

8. Underfrequency Limit -- For 50 Hz operation, jumper wire J1 should be cut.

Katolight Service - Master Repair Manual - Page 1336

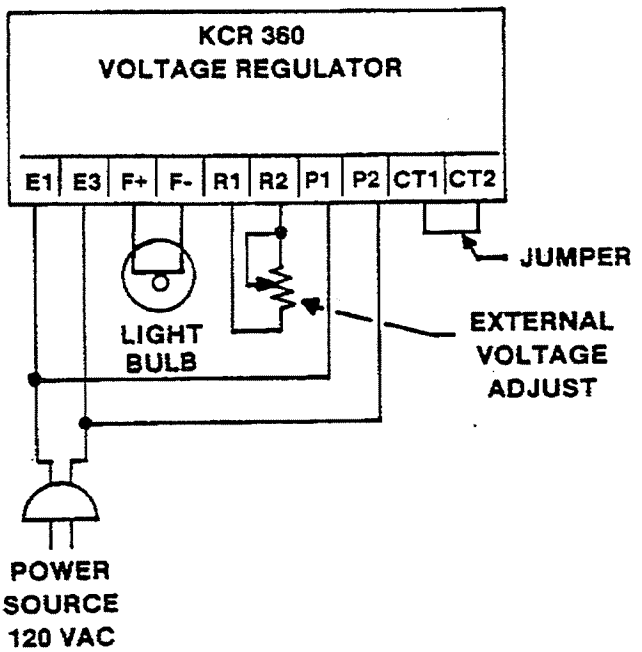

Fig. 6.7 Voltage Regulator Operational Test Connection Diagram

Katolight Service - Master Repair Manual - Page 1337

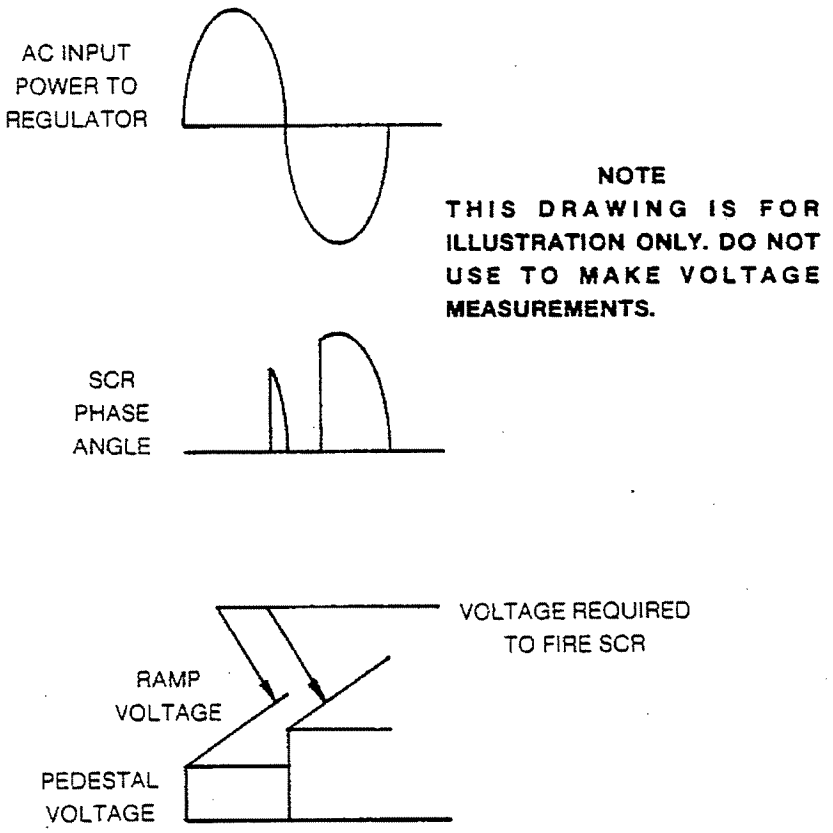

Fig. 6-8 Change in SCR Phase Angle with Change in Phase Control Circuit Pedestal Voltage

Publication Number: 351-01001-00 (3)
Publication Date: April 1983

KCR-360 SENSING CONNECTION

Complete Installation Instructions are given in Section 3 of the KCR-360 manual.

********** WARNING **********

De-energize generator set starting circuit before making repairs, connecting test instruments, removing or making connections to the voltage regulator. Dangerous voltages are present at the voltage regulator terminal boards and within the voltage regulator when the generator is running. These include the sensing voltage, power to the voltage regulator and the voltage regulator output. Accidental contact with live conductors could result in serious electrical shock or electrocution.

****

KCR-360 voltage regulators have an internal sensing transformer provided with taps on the primary winding for sensing voltages of 100 to 139, 200 to 228, 216 to 265, 275 to 458, 432 to 528, and 540 to 600 VAC. The transformer taps are identified with the corresponding nominal voltages which are 120, 208, 240, 416, 480, and 600 VAC.

Voltage taps are consecutive, starting with 120 volt near the center of the regulator and progressing to the 600 volt tap near the outside edge of the regulator. Details are shown in the figure below. Regulators are set at the factory for 240 volts unless specifically ordered for a different voltage.

To obtain proper operation for other voltages, the sensing connection must be changed as follows:

A. The slate wire with a brown stripe must be unsoldered from the existing terminal and resoldered to the correct terminal on sensing transformer T1.

B. For operation with generator voltages above 600 volts, a potential transformer of metering quality must be used to supply the regulator sensing voltage. The sensing circuit load is less than 6VA and correct polarity must be maintained to the voltage regulator sensing input.

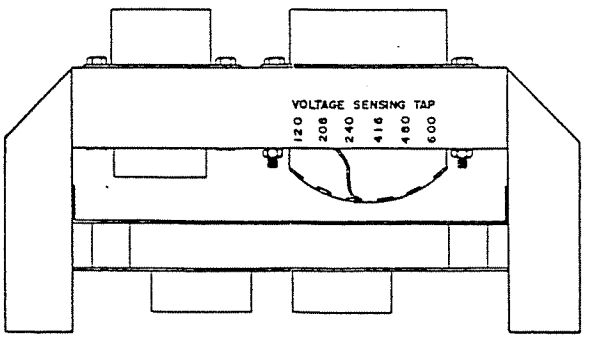

VOLTAGE SENSING TAP IDENTIFICATION

PUBLICATION NUMBER: **351-01002-00**
PUBLICATION DATE: **June 1982**

INSTRUCTION MANUAL

KATO™ KCR 760
VOLTAGE REGULATOR

INCLUDES
PRINCIPLES OF OPERATION
INSTALLATION INSTRUCTIONS
ADJUSTMENT AND OPERATING INSTRUCTIONS
MAINTENANCE AND TROUBLESHOOTING
DRAWINGS AND GENERAL INFORMATION

KATO ENGINEERING
RELIANCE ELECTRIC

Safety Summary

Observe the safety precautions that follow and the instructions contained in this manual when installing, operating, testing and making repairs to this equipment.

WARNING

De-energize generator set starting circuit before making repairs, connecting test instruments or removing or making connections to or within the voltage regulator. Dangerous voltages are present at the voltage regulator terminal board and within the voltage regulator when the generator set is running. These include the sensing voltage, power to the voltage regulator and the voltage regulator output. Accidental contact with live conductors could result in serious electrical shock or electrocution.

CAUTION

Regulator sensing circuit must never be opened while power is applied to the regulator input power terminals. Loss of sensing voltage will result in maximum regulator output.

The voltage regulator dc output (terminals F+ and F-) must never be opened during operation. To do so will produce inductive arcing that could destroy the exciter or voltage regulator. Therefore, never place circuit breaker contacts or voltage shutdown switch in the exciter field circuit.

CAUTION

Megger or high potential test equipment must not be used when testing the voltage regulator. Disconnect interconnecting conductors between the generator and voltage regulator when testing generator or exciter with megger or high potential test equipment. The high voltage developed by megger or high potential test equipment will destroy the solid state components within the voltage regulator.

SECTION 1
GENERAL INFORMATION, SPECIFICATIONS AND APPLICATION

GENERAL

The KCR 760 voltage regulator consists of transformers, transistors, silicon diodes, silicon controlled rectifiers (SCR's), integrated circuits, resistors, and capacitors. The regulators are relatively unaffected by humidity, temperature, vibration, or shock and are not subject to wear from moving parts. Solid state field flashing components rather than relays are used in the field flashing and underfrequency circuits, eliminating the possibility of contact arcing or contact failure.

APPLICATION

The KCR 760 voltage regulator is designed for operation with brushless synchronous generators. The voltage regulator controls generator voltage by regulating the amount of current it supplies the exciter field.

STANDARD FEATURES, OPTIONS AND ACCESSORIES

Features provided in standard KCR 760 voltage regulators, options available in this series, and various accessories that can be supplied with the generator set voltage regulating system are described in the paragraphs that follow. Where options are specified in the purchase order, the required circuitry changes are made within the regulator at the factory while accessories are parts that mount external to the regulator.

A. Sensing

1. **Standard Sensing**
   The basic KCR 760 regulator utilizes single phase 50/60 Hz sensing. The sensing transformer has a multi-tap primary permitting operation at sensing voltages of 100 to 600 V ac. The standard regulator includes an underfrequency limit circuit that decreases voltage in proportion to the decrease in frequency when speed drops below the UFL operational threshold. The UFL in standard 50/60 Hz sensing regulators is adjusted with an operational threshold of 45 Hz for 50 Hz application and 55 Hz for 60 Hz application.
2. **Optional Sensing**
   When specified in the purchase order the regulator can be supplied with the following variations in sensing circuitry.
   a. Three phase 50/60 Hz, 100-600 V ac sensing.
   b. UFL set 48/58 Hz for use with turbocharged engines.
   c. Volts-per-hertz circuitry in place of UFL for applications where voltage must be proportional to frequency over a speed range from rated rpm down to approximately ½ rated speed.
   d. 400 Hz, single or three phase, 100-600 V ac with 350 Hz UFL operational threshold.
   e. 400 Hz with UFL threshold higher or lower than 350 Hz.
   f. 50/60 Hz or 400 Hz, single or three phase 100-600 V ac with flat regulation for motor-generator set or variable frequency/constant voltage applications. Regulators with flat regulation will not include UFL or V/Hz circuitry.

B. Regulator Input Power and dc Output

1. **Standard Input Power and dc Output**
   Standard KCR 760 regulator utilizes single phase, 120 V ac $\pm$10% input power and has rated maximum continuous output of 65 V dc, 10 A; 90 V dc, 15 A one-minute field forcing.
2. **Optional Input Power and dc Output**
   When specified in the purchase order, the KCR 760 regulator may be modified to operate from single phase, 240 V ac $\pm$10% input power and thereby have rated maximum continuous output of 125 V dc, 10 A; 180 V dc, 15 A one-minute field forcing.

C. Field Flashing

KCR 760 voltage regulators include solid state field flashing circuitry.

D. Voltage Regulator Fuse

1. **Standard Fuse**
   Standard KCR 760 regulators are supplied with a 15 A normal blow fuse in the input power circuitry within the regulator. This fuse provides voltage regulator overload protection.

Katolight Service - Master Repair Manual - Page 1345

2. **Optional Fuse**
   In applications where the system does not include a field circuit breaker and generator field protection is required, a smaller fuse may be used. For generator field protection, fuse amperage should be 1 ½ to 2 times the exciter field current with rated load connected to the generator. Fuse amperage must not exceed 15 ampere or 2/3 open circuit forcing. Fuse must be normal blow type. Do not install time delay type fuse.

E. Voltage Adjustment

1. **Standard Voltage Adjust**
   KCR 760 voltage regulators are provided with an internal voltage range adjust potentiometer and an auto voltage adjust rheostat for remote mounting. The auto voltage adjust rheostat permits adjustment of generator voltage approximately $\pm$10% from the nominal sensing voltage.
2. **Wide Range Voltage Adjust**
   For applications where voltage must be adjusted more than $\pm$10% from nominal, wide range voltage adjust circuitry can be provided with the generator set. This accessory is designed for remote mounting and is electrically connected between the generator sensing lines and the regulator sensing terminals.

F. Parallel Operation Components

KCR 760 voltage regulators include a parallel operation reactive voltage droop transformer (T3) and a parallel voltage droop potentiometer (R4). For parallel operation each generator must be equipped with a current transformer for sensing reactive current. The transformer may have either a 1 A or 5 A secondary.

Where 1 A current transformer is used, the secondary leads connect to regulator terminals CT⊙ and CT1. Where a 5 A current transformer is used, the secondary connects to regulator terminals CT⊙ and CT5.

G. Electromagnetic Interference Filters

When specified in the purchase order the KCR 760 regulator can be supplied with EMI filters as an external accessory.

H. Input Power Load Isolation or Voltage Matching Transformers

Load isolation and voltage matching transformers are accessory items that mount external to the voltage regulator.

Load isolation transformers are available with 120 V primary, 120 V secondary (for use with standard 120 V ac input power voltage regulators), or 240 V ac primary and 240 V ac secondary (for use with 240 V ac input power regulators).

Load isolation transformers are recommended for any application where frequency of the input power to the regulator is different from the sensing frequency, such as 400 Hz motor-generator applications where regulator input power is taken from 50/60 Hz motor-generator set input power lines.

Voltage matching transformers are available for applications where available voltage is different from the voltage regulator rated input voltage.

I. Field Circuit Breaker

When specified in the purchase order, the generating system can be provided with a field circuit breaker for generator field protection.

J. Voltage Shutdown Switch

When specified in the purchase order, the generating system can be supplied with a switch that electrically connects in the line that supplies input power to the regulator. This protective device is recommended for engine driven generator applications not provided with field circuit breaker or underfrequency protection.

K. Automatic/Manual Voltage Control

When specified in the purchase order, the generating system can be supplied with an automatic/manual voltage control module. This accessory includes a full wave rectifier and a variable transformer (variac) for manual voltage control and a three position switch. The switch allows the generator to be controlled either automatically by the voltage regulator or manually. The OFF position provides voltage shut-down by de-energizing both the voltage regulator and the manual voltage control rectifier.

SPECIFICATIONS

A. Power Output:

65 V dc, 10 amperes, maximum continuous output; 90 V dc, 15 A one-minute field forcing where regulator is constructed for 120 V ac input.

125 V dc, 10 amperes, maximum continuous output; 180 V dc, 15 A one-minute field forcing where regulator is constructed for 240 V ac input.

Katolight Service - Master Repair Manual - Page 1346

B. Input Power:

Single phase, 50/60 Hz, 120 ± 10%; or single phase, 50/60 Hz, 240 V ac ± 10%.

NOTE: Specify regulator input and regulator power output requirement in purchase order. Input frequency other than 50/60 Hz must be specified on the purchase order.

C. Sensing:

Standard regulators are constructed for single phase 100 V ac to 600 V ac sensing.

Three phase 100 V ac to 600 V ac available as optional feature.

Special voltage or frequency available as optional feature.

V/Hz sensing available as optional feature.

D. Voltage Adjustment Range:

± 10% Standard. Wide range voltage adjust available as an optional accessory.

E. Field Resistance:

6.5 Ω minimum; 100 Ω maximum for standard 65 V dc regulator. 12.5 Ω minimum; 200 Ω maximum for optional 125 V dc regulator.

F. Burden Resistance:

Sensing: 6 VA maximum. Input power: 2400 VA maximum for 240 V ac input; 1200 VA maximum for 120 V ac input. Paralleling: 10 VA maximum.

G. Paralleling:

1 A for 6% droop or 5 A for 6% droop on current transformer. For 1 A connect to terminals CT• common and CT1; for 5 A connect to terminal CT• common and CT5. Factory adjusted 4% droop.

H. Fuse:

15 A maximum, ABC type fuse for voltage regulator protection.

I. Underfrequency Protection:

Except where flat regulation, V/Hz sensing or UFL with special operational threshold is specified in the purchase order, the underfrequency limit (UFL) circuit will provide underfrequency protection by reducing voltage in proportion to frequency. The UFL operational threshold where limiting starts is as follows:

1. **Standard**

   55 Hz for 60 Hz system
   45 Hz for 50 Hz system
   350 to 360 Hz for 400 Hz system

2. **Optional for use with generator driven by turbocharged engine**

   58 Hz for 60 Hz system
   48 Hz for 50 Hz system
   380 Hz for 400 Hz system

J. Regulator Accuracy:

Voltage regulation is maintained within ± ½ percent over full range of generator loading and for generator speed variations of up to 5 percent.

K. Regulator Response:

Less than 17 milliseconds.

L. Thermal Stability:

Less than ± ½ percent for 40° change in ambient temperature.

M. Operating Temperature:

-40°C to +60°C.

N. Storage Temperature:

-60°C to +85°C.

O. Power Dissipation:

Less than 35 W at maximum continuous rating during single generator operation; less than 45 W at maximum continuous rating during parallel generator operation.

P. Shock:

Tested to withstand up to 20 g's in each axis.

Q. Vibration:

Tested to withstand 1.2 g's from 6 to 26 Hz; 0.32 in. double amplitude from 26 to 52 Hz; 5 g's from 53 to 150 Hz.

R. Construction:

Steel chassis with welded seams; zinc plated according to specification QQ-2-325, Type II, Class 2; circuit board is silicon resin conformal coated.

S. Dimensions:

11½ in. (292 millimeters) x 8⅜ in. (213 millimeters) x 5 in. (127 millimeters).

T. Weight:

13 pounds (5.9 kilograms).

U. Mounting:

Voltage regulator may be mounted in any position providing that sufficient space is retained about the unit for satisfactory cooling, and shock and vibration do not exceed regulator specifications.

SECTION 2
PRINCIPLES OF OPERATION

GENERAL

Parts comprising the KCR 760 voltage regulator are shown on the electrical schematics contained in Section 6 in this manual.

A standard single phase sensing KCR 760 voltage regulator with underfrequency limit or V/Hz sensing circuitry is described in the paragraphs that follow. Where regulator has either three phase sensing or is designed for flat regulation the following difference will apply.

1. **Three phase sensing**

   Where the three phase sensing option is included the regulator will have two sensing transformers (T1 and T3) with interconnected primary windings and interconnected secondary winding.

2. **Flat Regulation**

   Where regulator is designed for flat regulation the regulator will not have the UFL or V/Hz circuitry and the voltage applied to the reference side of the first stage differential amplifier in the error detector will be the voltage across Zener diode Z1.

VOLTAGE REGULATOR CIRCUITS

The voltage regulator senses the generator voltage, compares a rectified sample of that voltage with a reference voltage and supplies the field current required to maintain the predetermined ratio between the generator voltage and the reference voltage. Transformer T1 is the sensing transformer in a standard single phase sensing KCR 760 voltage regulator while a KCR 760 voltage regulator designed for three phase sensing includes two sensing transformers (T1 and T3). The sensing circuitry also includes a transformer (T2) and potentiometer (R4). Transformer T2, potentiometer R4, and an external current transformer provide means of attaining reactive kVA load sharing during parallel generator operation. The parallel operation components do not affect voltage regulator operation when the generator is operated singly.

On regulators equipped with underfrequency limit (UFL) or V/Hz option, this circuitry interacts with the regulator sensing and error detector in a manner that decreases voltage during underspeed operation. A solid state flashing circuit operates each time the generator is started. The flashing circuit de-energizes when generator voltage has built up to about 70 percent of rated voltage output. Most of the circuits are contained on a printed circuit board. Parts that are individually mounted on the regulator case are the sensing transformer(s), parallel operation transformer T2, parallel voltage droop potentiometer R4, the power stage, and a fuse. External voltage adjust rheostat VAR is provided for installation on a control panel.

A. Sensing Circuit During Single Generator Operation

The voltage sensing transformer(s) provides a voltage proportional to the generator voltage output. This voltage is fed across the primary of T2 to a full wave rectifier comprised of silicon diodes D3, D4, D17, D18, D23, and D24. The rectified voltage is filtered by resistor R3, choke L1 and capacitor C1. The dc signal from the filter is applied to the error detector and the underfrequency limit.

Shorting the secondary parallel operation transformer T2, either by using the jumper bar across CT• and CT1, or turning R4 to its full counterclockwise position or setting the UNIT/PARALLEL switch to UNIT position, eliminates that effect of T2 during single generator operation.

B. Sensing Circuit During Parallel Generator Operation in Reactive Voltage Droop Compensation Mode

Generators interconnected for reactive voltage droop compensation will proportionally share inductive reactive loads during parallel operation by a decrease in generator system voltage. This method of kVAR load sharing is described in the paragraphs that follow.

The sensing transformer(s) provides a voltage proportional to the sensing voltage. A current transformer (CT) installed in line 2 of generator develops a signal that is proportional in amplitude and phase to the line current. This signal develops a voltage across the slide-wire parallel voltage droop adjust potentiometer R4. The tap on R4 supplies part of this voltage to the primary of transformer T2.

The voltage developed in the secondary of the sensing transformer(s) and the voltage developed in the secondary of T2 add vectorially. This action provides a voltage to the sensing diodes that is the vector sum of the stepped down sensing voltage and the parallel current transformer signal through T2. The sensing rectifier dc output is filtered and applied to the error detector and underfrequency limit.

When a resistive (unity power factor) load is connected to the generator, the voltage that appears across the droop potentiometer leads the sensing voltage by 90 degrees, and the vector sum of the two voltages is nearly the same as the original sensing voltage; consequently, almost no change occurs in generator output voltage.

Katolight Service - Master Repair Manual - Page 1349

When lagging power factor (inductive) load is connected to the generator, the voltage across the droop potentiometer becomes more in phase with the sensing voltage, and the combined vectors of the two voltages result in a larger voltage being applied to the sensing rectifiers. Since the action of the regulator is to maintain a constant voltage at the sensing rectifiers, the regulator reacts by decreasing the generator output voltage.

When a leading power factor (capacitive) load is connected to the generator, the voltage across the droop potentiometer becomes out of phase with the sensing voltage and the combined vectors of the two voltages result in a smaller voltage being applied to the sensing rectifiers. Then the regulator reacts by increasing the generator voltage.

During parallel operation of two or more generators interconnected for reactive voltage droop, if field excitation on one of the generators should become excessive and cause a circulating current to flow between the generators, the circulating current will appear as an inductive load to the generator with excessive excitation and a capacitive load to the other generator(s). The parallel components R4 and T2 will cause the voltage regulator of the generator with excessive field excitation to decrease the generator voltage while the voltage regulators of the other generator(s) will increase the generator voltage.

C. Sensing Circuit During Parallel Generator Operation in Parallel Cross-Current Compensation Mode

Parallel cross-current compensation allows two or more paralleled generators to share inductive reactive loads with no droop or decrease in the generator system output voltage when the line currents are proportional and in phase. This is accomplished by the action and circuitry described previously for parallel reactive voltage droop compensation and the interconnection of the current transformer secondaries in a closed series loop. Circulating currents cause the system to react as described previously for parallel voltage droop compensation.

A unit/parallel switch connected in each generator system eliminates the series resistance of the CT's in shut down generator sets from the CT's of the generator sets that are operating.

D. Error Detector

The error detector circuitry consists of a voltage adjust circuit, a voltage divider, a two-stage differential amplifier, and an internal minor feedback filter. The voltage adjust circuit consists of an external voltage adjust rheostat VAR, a voltage range adjustment R2, and fixed resistor R1. Full travel of the external voltage adjust provides $\pm$ 10% adjustment of the generator output voltage from nominal. The voltage range adjustment R2 establishes the maximum and/or minimum voltage adjust limit of VAR. The voltage adjust circuit and a voltage divider consisting of resistors R5 and R71 determine the input signal to the first differential amplifier.

The first differential stage is comprised of transistors Q1 and Q2, resistors R9 through R23, capacitor C3, Zener diode Z1, and circuitry within the underfrequency limit. Underfrequency limit (UFL) provides a reference voltage to the base of transistor Q2 as described in the UFL circuit description. During generator operation at rated frequency the reference signal is constant and identical to the Zener voltage. Voltage from the sensing circuit which is proportional to the generator voltage is applied to the base of transistor Q1. When Q1 base voltage is different from the reference voltage applied to the base of Q2, there will be a difference in Q1 collector current with respect to Q2 collector current.

The current from the collector of transistor Q1 is divided by resistors R9 and R16 and injected into the base of the second stage differential amplifier transistor Q3. Similarly, the current from the collector of transistor Q2 is divided by resistors R14 and R15 and injected into the second stage differential amplifier transistor Q4. Resistors R10 and C3 help to prevent oscillations at high frequencies. The second stage differential amplifier amplifies the output of the first stage differential amplifier. Components included in the second stage differential amplifier are transistors Q3 and Q4, and resistors R24 through R27. The collector voltage of transistor Q3 controls the phase control circuit. The minor feedback filter consists of resistor R8 and capacitor C2. The filter removes any remaining ac from the dc signal.

E. Phase Control Circuit

The phase control circuit consists of diodes D5 and D6, resistors R28 through R32, capacitors C6 and C7, Zener diode Z2 and programmable unijunction transistor (PUT) Q5.

The phase control circuit is a"ramp and pedestal" control that regulates the phase angle of the power controller circuit SCR's by controlling the "turn on" signal it supplies to the gate of the SCR's. An exponential ramp voltage that starts from a voltage pedestal provides the "turn on" gating signal. Because the ramp voltage starts from the voltage pedestal, a small change in the amplitude of the pedestal voltage results in a large change in SCR phase angle.

Katolight Service - Master Repair Manual - Page 1350

The amplitude of the pedestal voltage is determined by the collector current of second stage differential amplifier transistor Q3. Zener diode Z2 serves as a voltage clamp and resistors R31 and R32 are a voltage divider which determines the threshold of the programmable unijunction transistor Q5. The output of PUT Q5 is applied to the gate of the power controller SCR's through resistors R43 and R44.

F. Power Stage (Power Controller)

The power stage supplies the generator exciter field current. The power stage consists of an SCR/diode bridge rectifier. The power stage input is either single phase 120 V ac or single phase 240 V ac depending on regulator design. The output of the power stage is regulated by the "turn on" gating signal its SCR's receive from the phase control circuit. The circuit includes a free wheeling diode for field discharge of the inductive exciter field load and a fuse (F1) in its input power line.

G. Field Flashing Circuit

The flashing circuit includes the power stage SCR's, field effect transistor (FET) Q6, transistors Q7 through Q10, resistors R34 through R46, diodes D7 through D11 and capacitor C8. Transistors Q8 and Q9, and resistors R34, R36, R37, R38, R40 and R41 comprise a Schmidt trigger circuit. The Schmidt trigger turns on when an increasing voltage is present with magnitude approximately 70% of the nominal 24 V dc output of the sensing rectifiers, and turns off when a decreasing voltage is present with magnitude of approximately 30% of the nominal output of the sensing rectifier.

When the Schmidt trigger is off, FET Q6 is on. This action turns on transistors Q10 and Q7 which supply current to fire slave SCR1 located on the circuit board. Slave SCR1 fires the silicon controlled rectifiers SCR1 and SCR2 in the regulator power controller circuit which, when on, supply current to the exciter field. When the Schmidt trigger turns on, FET Q6 turns off. This action turns off transistors Q10 and Q7 which removes the gating signal to slave SCR1 and in turn the gating signal of the flashing circuit from the power controller SCR's.

H. Stability Control

The stability circuit is a rate feedback RC network. It consists of capacitors C4 and C5, resistors R7, R19 and R20, and stability adjust potentiometer R6. This RC network injects a stabilizing signal from the regulator output which helps to prevent generator voltage oscillation.

I. Underfrequency Limit (UFL)

NOTE: The underfrequency limit circuitry is not included when regulator includes the flat regulation option. Where regulator is supplied with the V/Hz sensing option, operation and construction of the V/Hz circuitry is similar to the underfrequency limit.

The UFL provides a reference voltage to the error detector which is constant when the generator output frequency is higher than a predetermined limiting frequency. When the generator is operating slower than the predetermined UFL operational threshold, the UFL will provide the error detector with a reference voltage that is proportionally lower.

The reference voltage to the UFL is supplied by Zener diode Z1. The UFL operational threshold for standard 50 Hz, 60 Hz, and 400 Hz KCR 760 regulators are given in Section 1 in this manual. The operation of the various components comprising the UFL assembly is described in the paragraphs that follow.

The voltage from the sensing transformer is rectified by diodes D19 and D21 and the rectified signal is applied to a Schmidt trigger consisting of operational amplifier IC2A, and resistors R47 through R51. A 24 V dc peak-to-peak square wave is generated at the output of IC2A at double the frequency of the sensing voltage.

The 24 V dc square wave from the Schmidt trigger is fed to the first stage of a two-stage monostable multivibrator where it is decreased to a 5 V dc peak-to-peak square wave at double the frequency of the sensing voltage. The 5 V dc square wave is applied to the second stage of the monostable multivibrator. The monostable multivibrator output pulse is uniform in amplitude and duration for each input pulse. Thus, the average voltage level of the collective pulses at the output of the monostable multivibrator is directly proportional to the frequency of the pulses. The monostable multivibrator output is fed into a four-pole Butterworth low pass filter comprised of operational amplifier IC2B and IC2C, resistors R60 through R66, and capacitors C13 and C18. This filtering circuit does the actual averaging of the collective pulses from the monostable multivibrator. Amplifier gain is set at level where its output equals the Zener reference at rated 60 Hz or 400 Hz operation by resistors R65, R66 and capacitor C16. Where operated at rated frequency of 50 Hz, the circuit is set for 50 Hz operation by removing jumper J1. This action adds R57 to the circuit.

Diode D12 and integrated circuit IC2D form a voltage clamping circuit. If the voltage from the Butterworth filter is equal to that of the Zener reference, the UFL output to the error detector will be the same as the Zener reference and the UFL will have no effect on regulator operation. However, when the voltage from the filter decreases as occurs during underspeed operation of the generator, the reference voltage applied to the error detector is less than the Zener reference. This action will cause the error detector differential signal to proportionally increase in a manner that results in a proportionally later turn-on signal to the regulator output SCR's. The regulator then decreases excitation and a lowering of generator output voltage occurs.

A resistive network consisting of resistors R54 and R56 and potentiometer R55 determines the underfrequency limit operational threshold. Zener diode Z3 and capacitors C9 and C10 protect the integrated circuits from damage should excessive voltage spikes occur.

SECTION 3
INSTALLATION

MOUNTING

The voltage regulator can be mounted in any position without affecting its operating characteristics. The voltage regulator is convection cooled. Sufficient space should be retained about the regulator for heat dissipation, making electrical connections and controls adjustments. The voltage regulator can be mounted in any location where shock and vibration is not excessive and the ambient temperature does not exceed its ambient operational limits.

INTERCONNECTION

The regulator must be connected to the generator system as instructed in this section and as shown in the connection diagram provided with the generator set. An overall outline drawing that shows the location of regulator mounting provision and identifies parts of the voltage regulator is contained in Section 6. Also contained in Section 6 are typical interconnection diagrams and electrical schematics of the voltage regulator. Number 14 gauge or larger wire should be used for connections to the voltage regulator.

WARNING

De-energize generator set starting circuit before making repairs, connecting test instruments or removing or making connections to or within the voltage regulator. Dangerous voltages are present at the voltage regulator terminal boards and within the voltage regulator when the generator set is running. These include the sensing voltage, power to the voltage regulator and the voltage regulator output. Accidental contact with live conductors could result in serious electrical shock or electrocution.

CAUTION

Megger or high potential test equipment must not be used when testing the voltage regulator. Disconnect interconnecting conductors between the generator and voltage regulator when testing generator or exciter with megger or high potential test equipment. The high voltage developed by megger or high potential test equipment will destroy the solid state components within the voltage regulator.

A. Single Phase 100-600 V ac Sensing (Terminals E1 and E2)

Standard KCR 760 voltage regulator designed for single phase sensing has an internal sensing transformer (T1) as shown on Figure 3. This transformer is provided with taps on the primary winding for sensing voltages of 100 to 139, 200 to 228, 216 to 265, 375 to 458, 432 to 528 and 540 to 600 V ac. The transformer primary winding taps are identified with the corresponding nominal voltages which are 120, 208, 240, 416, 480, and 600 V ac. To obtain proper operation the internal wire from voltage regulator terminal E3 must be connected onto the correct primary tap on transformer T1. Electrical wires within the regulator connect to the sensing transformer secondary winding as shown on Figure 3.

CAUTION

Regulator sensing circuit must never be opened while power is applied to the regulator input power terminals. Loss of sensing voltage will result in maximum regulator output.

B. Three Phase 100-600 V ac Sensing (Terminals E1, E2 and E3)

Where regulator is designed for three phase sensing the regulator includes two sensing transformers (T1 and T3) as shown on Figure 4.

Except when otherwise specified in the purchase order, the regulator sensing transformers will both include multi-tap primary winding for use with the sensing voltages described in the preceding "Single Phase 100-600 V ac Sensing" procedure.

To obtain proper operation the internal wire from voltage regulator terminal E3 must be connected to correct primary winding tap on transformer T1, and the internal wire from voltage regulator terminal E2 must be connected to the corresponding primary winding tap on transformer T3. Electrical wires within the regulator connect to the sensing transformers secondary winding as shown on Figure 4.

Katolight Service - Master Repair Manual - Page 1353

C. Input Power (Terminal P1 and P2)

Before making electrical connections, refer to the wiring diagram provided with the generator. Connect input power in accordance with appropriate steps that follow.

1. Where regulator is designed for 120 V ac ± 10% input power and 65 V dc maximum continuous output, connect single phase 120 V ac power to terminals P1 and P2. Refer to Section 1 for recommended use of load isolation and voltage matching transformers.

NOTE: Jumper wire J3 on regulator circuit board is installed when regulator input power is 120 V ac ± 10% and removed when input power is 240 V ac ± 10%.

2. Where regulator is designed for 240 V ac ± 10% input power and 125 V ac maximum continuous output, connect single phase 240 V ac power to terminals P1 and P2. Refer to Section 1 for recommended use of load isolation and voltage matching transformers.
3. Where regulating system is supplied with electromagnetic interference filters, connect as shown on the wiring diagram provided with the generator set.

D. Output Power (Terminals F+ and F-)

1. Be sure regulator output matches the generator exciter rating. KCR 760 voltage regulator designed for 120 V ac input is designed for 65 V dc maximum continuous output. KCR 760 voltage regulator designed for 240 V ac input is designed for 125 V dc maximum continuous output.
2. Correct polarity must be maintained between the regulator output and exciter field.
3. Field resistance for 65 V dc regulator should not be less than 6.5 Ω while field resistance for 125 V dc regulator should not be less than 12.5 Ω.
4. Field circuit should not be grounded and must not be opened or shorted during operation of the generator set.
5. Because the regulator output leads are not connected to any part of the system except the exciter field, they are not filtered. To minimize conducted EMI the leads should be kept as short as possible and shielded. Effective shielding can be attained by routing both leads through ½ inch conduit. In general, not more than one or two feet of field leads should be unshielded. If the voltage regulator is installed within the generator outlet box, it is possible to achieve satisfactory results with short unshielded leads.

E. Grounding

A good electrical power ground is not necessarily a good electromagnetic interference ground. Ground leads should be as short as possible, preferably of copper strap with a width of 1/5 the length. Grounding the chassis to earth ground makes all grounds common.

F. External Voltage Adjust Rheostat (Terminals R1 and R2)

Terminals R1 and R2 are provided for connection of the voltage adjust rheostat. The rheostat provides adjustment of the regulated generator voltage ± 10% of nominal. It is provided as a separate item for panel mounting. Connecting wires from the rheostat attach to terminals R1 and R2. A jumper wire must be connected between rheostat terminal 2 and rheostat terminal 1 as shown in Fig. 2.

G. Connection to Reactive Voltage Droop Terminals CT•, CT1 and CT5.

1. Parallel Operation

Where generators will be operating parallel, install current transformer in Phase B from each generator and connect according to a or b that follows.

a. Current Transformer (1 ampere secondary)

Connect secondary leads to CT• common and CT1. Be sure to maintain correct polarity. Make certain jumper, when supplied, is removed from across CT• and CT1.

b. Current Transformer (5 ampere secondary)

Connect secondary leads to CT• common and CT5. Be sure to maintain correct polarity. Make certain jumper, when supplied, is removed from across CT• and CT1.

2. Reactive Voltage Droop or Cross-Current Compensation

The regulating system may be connected for parallel operation in either the reactive voltage droop or cross-current compensation mode. Connect according to either a or b that follows.

a. Reactive Voltage Droop

Connect the current transformer to the respective regulator as shown in Fig. 8.

b. Cross-Current Compensation

For cross-current, connect each CT to its respective regulator. Then connect the finish of the first CT to the start of the third CT, etc. Continue until all CT's are connected in series and connect the finish of the last CT to the start of the first CT (see Fig. 9).

Katolight Service - Master Repair Manual - Page 1354

On parallel cross-current compensation applications consisting of two or more generators, a unit/parallel switch should be used if all the generators are not always on the bus. If the switch is not used, a voltage droop will be introduced into the system which will cause the voltage of the incoming generator to fluctuate prior to paralleling. This is due to the unloaded generator parallel CT not supplying its compensating signal, but allowing a voltage drop to occur across it. Ideally, the switch is an auxiliary on the generator output circuit breaker that opens when the breaker is closed.

3. **Generator Operating Singly**

When generators are not operating parallel and reactive voltage droop is not required, one of the following methods must be employed to eliminate the effect of the parallel operation transformer within the voltage regulator.

a. Install unit/parallel switch across the current transformer secondary and close switch during single generator operation.

b. Set voltage droop resistor R4 to its minimum droop position.

c. Where generator will be operating singly, install jumper across terminals CT• and CT1.

H. UFL Circuit 50/60 and 400 Hz Selector J1.

The underfrequency limit components or V/Hz components are located on the voltage regulator circuit board, Fig. 5. Parts comprising the UFL or V/Hz components are shown on Fig. 7. A jumper wire J1 eliminates the effect of resistor R57. Removing the jumper J1 places R57 in the circuit.

1. **60 or 400 Hz operation**

Make certain jumper wire is installed across area marked J1. Wire is mounted on component side of circuit board and ends of jumper wire are soldered on foil side of the circuit board.

2. **50 Hz Operation**

Make certain jumper wire is removed from across area marked J1. Remove J1 by cutting each end of the jumper wire.

I. Voltage Regulator Fuse

The voltage regulator contains a 15 A normal blow fuse in the voltage regulator input power circuit (see Fig. 1, 3 and 4). In applications where voltage regulator power requirements are reduced, as when used with small generators where excitation is less than given, a smaller fuse may be used. Never install a fuse larger than 15 ampere and never install a delay type fuse.

WARNING

Fire hazard can exist if voltage regulator fuse is larger than 15 A or delay type fuse is used.

ACCESSORY ITEMS

Accessory items provided with the generator system must be connected as shown on the wiring diagram provided with the generator set and the accessory item drawing or instruction. The precautions and general procedures that follow should be observed when connecting accessory items.

NOTE: On generator systems that include the auto/manual voltage control option, the OFF position on the AUTO/OFF/MANUAL selector switch provides voltage shutdown. On generator systems that include a field circuit breaker, manually tripping the circuit breaker OFF provides voltage shutdown.

CAUTION

Never install the voltage shutdown switch in the exciter field circuit as the voltage regulator dc output (terminals F+ and F-) must not be opened during operation. To do so will produce inductive arcing that could destroy the exciter and regulator output power bridge.

A. Voltage Shutdown (Engine Idle Switch)

The system can be equipped with a switch to allow removal of excitation in an emergency or when the prime mover must be operated at reduced speeds. This switch must be placed in the input power line to the regulator (terminal P1 or P2).

CAUTION

The voltage regulator dc output (terminal F+ and F-) must never be opened during operation. To do so will produce inductive arcing that could destroy the exciter or voltage regulator. Therefore, never place circuit breaker contacts in the exciter field circuit.

B. Field Circuit Breaker

The field circuit breaker must be of the type that has separate terminals for the thermal element and the contacts.

The circuit breaker thermal element receives heat from either the field current or generator line current. Where it is heated by field current, the thermal element connects between the voltage regulator output and the exciter field. Where it is heated by generator line current, the thermal element connects to a current transformer located in one of the generator load lines.

C. Auto/Manual Voltage Control

The auto/manual voltage control option includes the components described in the paragraphs that follow. Connect the auto/manual voltage control module as shown on the wiring diagram provided with the generator.

1. **Three-Position Selector Switch**

   When switch is set to the AUTO position power is fed across the switch contacts to regulator input power teminal P1 and P2. When switch is set to MAN position, power is fed across the switch contacts to the manual voltage control circuit rectifiers. OFF position opens input power to both the voltage regulator and the manual voltage control rectifiers.

2. **Manual Voltage Control Circuit**

   The manual voltage control circuit consists of a full wave rectifier assembly and a manual voltage control variac. The manual voltage control variac controls generator output whenever the generator set is operated in the manual voltage control mode of operation.

Katolight Service - Master Repair Manual - Page 1356

SECTION 4
CONTROLS ADJUSTMENT AND OPERATING PROCEDURES

GENERAL

Before initial operation is attempted, verify that the regulator is connected for the application.(See wiring diagram provided with the generator set and review the procedures given in Section 3.)

ADJUSTMENTS

The adjustments pertaining to the voltage regulator and system operation are described in the paragraphs that follow and, except where noted, adjustment is made during initial operation and normally does not have to be repeated during the life of the voltage regulator.

A. Generator Voltage Adjust Rheostat (VAR)

This adjustment is provided to control the generator voltage. When set to its maximum counterclockwise position, minimum generator voltage is obtained. Maximum generator voltage is obtained when the rheostat is set to its maximum clockwise position.

B. Nominal Voltage Range Set Adjust (R2)

This adjustment is provided to extend the limits of the generator voltage adjust rheostat (VAR). Normally R2 is set to provide the generator voltage adjust rheostat with an adjustment range of $^{+}$10% of rated voltage. R2 is located on the regulator. A ½ inch locknut must be loosened before attempting to adjust R2 with a small screwdriver. The locknut must be retightened after adjustment is complete.

C. Stability Adjustment (R6)

This control is located on the regulator circuit board and is adjustable through the top of the regulator case. A ½ inch hex-head locknut that keeps the potentiometer shaft from turning due to vibration must be loosened before attempting to adjust R6 with a small screwdriver. The locknut must be retightened after adjustment is complete.

Stability control R6 provides for stable regulating operation by controlling the amount of feedback that is applied to the error detector stage. Normally it is factory set at or near its maximum clockwise position. This setting normally assures good stability, but tends to slow the response time of the generator. If rotated counterclockwise the system response time becomes faster. However, if set too far counterclockwise, the generator voltage may oscillate (hunt). If oscillation occurs, the potentiometer should be turned clockwise past the point where oscillation stops. The system stability is most critical at no-load. Optimum adjustment is attained when generator voltage is stable and response is satisfactory at no-load and also during operation under any load up to the full load rating of the generator. If a setting is desired that provides the fastest possible voltage response with good generator stability, an oscilloscope or some voltage recording device should be used.

D. Parallel Voltage Droop Potentiometer (R4)

This adjustment is provided to control the voltage droop signal of generators operating parallel. It is located on the regulator chassis. Maximum voltage droop is attained when the potentiometer is set to its maximum clockwise position. Each generator that will be operated parallel should be adjusted for identical voltage droop as described in the "Initial Parallel Operation" procedure that follows. Adjustment is made by loosening the locknut with a ½ inch wrench, adjusting the droop with a screwdriver and then tightening the locknut after the adjustment has been made.

NOTE: Where generator will be operating singly and use of reactive voltage droop circuitry is not desired, either set R4 to minimum droop position or install jumper or unit/parallel switch across terminals CT◎ and CT1.

E. Potentiometer (R89)

Do not adjust potentiometer R89. This potentiometer is for reference circuitry temperature compensation and has been factory set for optimum temperature compensation.

Katolight Service - Master Repair Manual - Page 1357

F. Underfrequency Adjustment (R55)

This adjustment is included in voltage regulators provided with the underfrequency limit option. R55 is adjusted at the factory as listed in Section 1 in this manual, or requested in the generator set purchase order. Adjustment of R55 is made while the generator is running at rated speed and measuring the voltage from circuit board terminal TP1 (negative) to TP2 (positive) with an accurate dc voltmeter. Table 4-1 lists dc voltage across TP1-TP2 for 60 Hz generators, and Table 4-2 lists dc voltage across TP1-TP2 for 50 Hz generators. Adjustment is made as follows.

1. Ascertain where underfrequency limiting should begin. This is the UFL operational threshold.
2. Install accurate dc voltmeter from TP1 (negative) to TP2 (positive).
3. Run generator at rated speed.
4. Adjust R55 to position where voltage across TP1-TP2 equals the test voltage given in the appropriate table. **EXAMPLE:** With unit running at 60 Hz and where limiting is desired at about 55 Hz, voltage across TP1-TP2 should be -0.438 V dc. Voltage across TP1-TP2 will then drop to zero when speed is decreased to 55 Hz.

TABLE 4-1
VOLTAGE ACROSS UNDERFREQUENCY LIMIT TERMINALS TP1-TP2 WITH GENERATOR RUNNING AT 60 Hz AND RATED SENSING VOLTAGE

OPERATIONAL THRESHOLD	dc VOLTAGE TP1 TO TP2
60 Hz	0.000
59 Hz	-0.087
58 Hz	-0.169
57 Hz	-0.265
56 Hz	-0.350
55 Hz	-0.438

NOTE: Jumper wire must be across J1 on 60 Hz system. Measured voltage must be negative (-). Slight variation in operating threshold may exist due to circuit and meter tolerances.

TABLE 4-2
VOLTAGE ACROSS UNDERFREQUENCY LIMIT TERMINALS TP1-TP2 WITH GENERATOR RUNNING AT 50 Hz AND RATED SENSING VOLTAGE

OPERATIONAL THRESHOLD	dc VOLTAGE TP1 TO TP2
50 Hz	0.000
49 Hz	-0.107
48 Hz	-0.210
47 Hz	-0.315
46 Hz	-0.425
45 Hz	-0.553

NOTE: Jumper wire J1 must be removed during 50 Hz operation. Measured voltage must be negative (-). Slight variation in operating threshold may exist due meter tolerances.

G. Manual Voltage Control Variac

This control is included in generator sets equipped with the automatic/manual voltage control option. During generator set operation using the manual voltage control mode, the mode selector is set to the MAN position and generator voltage output is controlled by the manual voltage control variac. In order to maintain generator output voltage at a constant level during operation in the manual voltage control mode, the manual voltage control variac must be adjusted each time a change in load occurs (either added or shed).

Katolight Service - Master Repair Manual - Page 1358

FIELD FLASHING

CAUTION

Do not attempt to flash the exciter field while the generator set is running. Be careful to observe polarity when connecting flashing source. Accidental polarity reversal will destroy the voltage regulator power stage.

The voltage regulator contains an internal solid state field flashing circuit. A minimum of about 6 V ac at the regulator input power terminals is required for operation of the flashing circuit. Usually the exciter field poles retain sufficient magnetism to allow circuit operation and generator voltage buildup

However, if flashing is required, stop the generator and then flash field as given in the procedure that follows.

1. Connect the negative lead of a 12 or 24 V dc flashing source onto regulator terminal F-. Do not remove any other wires from terminal F-.
2. Slide the positive lead of the flashing source onto regulator terminal F+. Only a few seconds flashing should be necessary.
3. Slide the flashing source positive lead off terminal F+. Then remove flashing source negative lead from terminal F- and tighten terminal.
4. Start generator and check for satisfactory voltage buildup.

SINGLE UNIT INITIAL OPERATION PROCEDURE

Before operating the generator for the first time, double check to make certain all wiring connections are made correctly. Review the wiring diagrams provided with the generator set, the installation instructions contained in Section 3 and the preceding adjustment procedures.

When the generator set is equipped with the automatic/manual voltage control option, normal operation of the generator set is the automatic voltage control mode. During generator set operation in the automatic voltage control mode, generator output voltage is pre-established during no-load operation by adjustment of the external voltage adjust rheostat and automatically maintained at the amplitude under all load conditions from no-load to full rated load by the voltage regulator.

A. Automatic Mode Operation

Review preceding "Adjustment" and "Single Unit Operation"procedures. General procedure for single unit automatic mode operation is as given in steps 1 through 19 that follow.

1. If the generator set is equipped with the auto/manual control option, set the selector switch to the AUTO position.
2. Turn the voltage adjust rheostat to position that is about one-half of the way between the maximum counterclockwise and maximum clockwise positions.
3. Open the output circuit breaker. Do not apply load until satisfactory no-load operation is attained.
4. If a voltage shutdown switch or field circuit breaker is used, close the switch to connect input power to the voltage regulator.
5. On generators that will be operated parallel and if the sets are equipped with unit/parallel switches, close the switch on all generators.
6. Start the prime mover and bring up to rated speed.

NOTE: Deviation in generator output voltage approximately $\pm$10% of rated can be corrected by adjusting the voltage adjust rheostat and if necessary, the voltage range set adjust.

7. Verify generator voltage. Any of the following conditions can occur.

   a. No Voltage Buildup

   If this condition exists, the exciter may not have sufficient residual magnetism. Residual magnetism may be restored by flashing the field as described in the "Field Flashing" instructions.

   b. Overvoltage (+15% or more)

   If this condition occurs, open the shutdown switch immediately and/or stop the prime mover. Determine the cause of overvoltage.

   c. Undervoltage (-15% or more)

   If this condition occurs, open the shutdown switch immediately and/or shut down the prime mover. Determine the cause of undervoltage.

d. Undervoltage by Operation of the Underfrequency Limit Circuit (UFL)

Undervoltage by operation of the underfrequency circuit can occur if the prime mover governor is not adjusted to maintain rated speed or when the underfrequency limit circuit is adjusted to operate at a frequency that is very close to the rated frequency of the generator.

e. Voltage Begins to Build Up and Collapses

If this condition exists, stop the prime mover and determine the cause of collapse. If necessary refer to troubleshooting procedure.

f. Oscillating Voltage (Hunting)

If this condition occurs, be sure prime mover speed is not fluctuating. Then, if condition persists, adjust the stability adjust (R6) as given in "Stability Adjustment", page 4-1.

8. Operate generator set for about one-half hour.
9. After about one-half hour of satisfactory operation, load may be applied as follows:
10. Close output circuit breaker and connect load.
11. Be sure generator output voltage is correct and stable. Verify that steady state voltage regulation is satisfactory.
12. Remove load.
13. If generator will be operating parallel, adjust the parallel operation potentiometer R4 as given in steps 14 through 18 which follow. To stop unit see step 19.
14. If generator set is equipped with unit/parallel switch, open the switch.
15. Monitor no-load voltage.
16. Apply inductive load and note the droop in generator voltage. A droop of about 6% is attained when R4 is turned to complete clockwise position for maximum resistance and the current transformer secondary current is one ampere connected to terminals CT⊖ and CT1 or 5 amperes connected to terminals CT⊖ and CT5.
17. If droop is more than is required, turn R4 counterclockwise. If droop is less than is required, turn R4 clockwise.
18. Repeat steps 15 through 17 as necessary to obtain required droop signal.
19. To stop unit, remove load, open output circuit breaker and then stop prime mover.

B. Manual Mode Operation

This test applies only to generator sets equipped with the auto/manual voltage control option. Normal operation of the generator set is in the automatic voltage control mode. The manual voltage control mode provides a means of operating the set should the voltage regulator fail. The manual control should be tested for proper operation during the initial operation of the set and can be used to determine whether cause of system malfunctions are due to faulty generator or voltage regulator operation. Test the manual voltage control as follows:

1. Perform preceding automatic mode operating procedure.
2. Open output circuit breaker and, if running, stop prime mover.
3. If included, close unit/parallel switch.
4. Set auto/off/manual selector switch to MAN position.
5. Set manual voltage adjust variac to the complete counterclockwise position.
6. Start prime mover and bring up to rated speed.
7. Turn manual voltage adjust variac to position where correct generator voltage is measured by the generator voltmeter.
8. Turn manual voltage adjust variac to position where voltmeter indicates generator voltage is about 5% higher than rated.
9. Close output circuit breaker and apply load.
10. Measure output voltage. If not correct, adjust the manual voltage adjust variac.
11. Repeat steps 8 and 10 each time load is increased.
12. Before shedding load, decrease generator voltage about 5% below rated.
13. Adjust manual voltage adjust variac to position where voltmeter indicates generator is producing required voltage.
14. Repeat steps 12 and 13 each time any part of the load is shed.

Katolight Service - Master Repair Manual - Page 1360

15. To stop generator set, follow steps 16 through 19.
16. Remove load and open generator circuit breaker.
17. Set voltage adjust rheostat for rated generator output voltage.
18. Stop prime mover.
19. Set auto/off/manual switch to AUTO position.

PARALLEL OPERATION

The paragraphs that follow describe the procedures to be followed to operate two or more generators in parallel. In generating systems equipped with the automatic/manual voltage control option, parallel operation should always be made in the automatic voltage control mode. NEVER ATTEMPT TO PARALLEL GENERATORS WHEN THE MODE SWITCH IS SET TO MAN POSITION.

A. Metering

In order to attain satisfactory paralleling and to check for proper parallel operation all generators should be equipped with the following monitoring equipment.

1. ac voltmeter to measure generator output voltage (1 per set).
2. ac voltmeter to measure bus voltage (1 per system).
3. ac ammeter (1 per set).
4. Power factor or kVAR meter (1 per set).
5. kW meter (1 per set).
6. Exciter field current dc ammeters (1 per set).
7. Synchroscope or a set of lights to indicate when units are in phase.

B. Checks Prior to Initial Parallel Operation

Before initial parallel operation review the procedures and checks that follow.

1. Verify that each generator is connected to the bus with the same phase rotation as that of the bus. This may be done using some phase rotation test instrument or an induction motor of known rotation during the initial single unit operation procedure.
2. Verify that the voltage regulating system of each generator is equipped with the parallel signal sensing transformer.
3. Make certain the paralleling signal at regulator terminals CT⌀ and CT1 or CT5 have the proper phase rotation with that of the sensing voltage at terminals E1 and E3. In applications where units are connected for reactive voltage droop, verify that the connection is made as shown in Figure 8. Cross-current compensation application requires interconnection of the system as shown in Figure 9.
4. Prior to operation, the parallel voltage droop potentiometer R4 on all regulators should be set for identical droop. This can be accomplished by individually testing each generator set, one at a time, as given in the "Single Unit Initial Operation Procedure".

C. Preliminary Parallel Operation

Before attempting to parallel two or more generator sets, individual sets should be tested to ensure that paralleling features function properly. The test that follows may be used.

1. On generating systems equipped with the auto/manual control option, verify that the switch is set to AUTO position.
2. Verify that the jumper bar has been removed from across regulator terminals CT⌀ and CT1.
3. On generating systems equipped with unit/parallel switches, verify that the switch on generator set being tested is set to PAR position (open) and be sure that the switch for each remaining generator is set to UNIT position (closed).
4. Place the generator in operation as described in the section "Single Unit Initial Operation Procedure" through number 19. Observe procedure given in the following steps 5 and 6.
5. Apply 25% to 100% unity power factor load to the set under test. Generator voltage should change less than 1% and the frequency should decrease if the governor is set for droop operation.
6. Apply a 25% to 100% 0.8 P.F. inductive load. Voltage should droop. If the voltage rises instead of drooping, reverse CT leads. If droop is not correct adjust parallel droop resistor R4 as described in the "Parallel Voltage Droop Resistor" adjustment procedure at the beginning of Section 4.

D. Paralleling Generators

The instructions that follow contain the procedures in sequential order to be followed when paralleling generators. These instructions and those contained in preceding paragraphs should be completely reviewed and understood before paralleling is attempted.

1. Set auto/off/manual switch on all generators to AUTO position (generator set equipped with automatic/manual voltage control option).
2. On generating systems equipped with unit/parallel switches, set switch on unit being started (generator set No. 1) to PARALLEL position (open). Set switch on remaining generator sets to UNIT position (closed).
3. Start generator set No. 1.
4. Adjust generator voltage and frequency to nominal.
5. Apply the load.
6. Verify satisfactory voltage regulation and make certain frequency is not fluctuating.
7. Repeat preceding procedures 1 and 2 on generator set No. 2.
8. Start generator set No. 2.
9. Adjust generator set No. 2 frequency and voltage to nominal.
10. Adjust speed of generator set No. 2 slightly higher than that of generator set No. 1.
11. Observing the synchroscope (or lights), when generator No. 2 is in phase with generator No. 1, close the circuit breaker for generator No. 2.
12. Immediately after closing the circuit breaker, measure line current of generator No. 2. It should be well within the rating of the generator. Also, immediately after closing the circuit breaker, observe the kW or power factor meters. The following conditions could occur:
    a. **A high ammeter reading accompanied by a large kW unbalance.**
       When this condition exists, the speed governor is either not adjusted correctly or is faulty.
    b. **A high ammeter reading accompanied by a large kVAR unbalance.**
       When this condition exists, the voltage regulating system is either not adjusted correctly or is faulty.
13. Adjust the speed of generator set No. 2 to the point where each generator is carrying the desired share of kW load. (See note following procedure 14.)
14. Adjust the voltage of generator No. 2 until the ammeter readings of both generators are near minimum. (See following note.)

NOTE: If kVAR or power factor meters are available, adjust voltage adjust rheostats for equal or proportional kVAR or power factor readings.

If the generators are equipped with power factor meters, alternately adjust the speed and voltage on No. 2 until the ammeter readings are proportional and the power factor readings are equal.

NOTE: To obtain best results, final adjustments should be made with full load on the bus.

15. With full load applied, readjust the speed and voltage of generator No. 2 until the desired load division is obtained.

NOTE: The best adjustment is obtained when each generator supplies the same percent of its rated current, the power factor readings are equal, or the sum of the ammeter currents is minimum.

16. In applications where three or more generators are to be operated parallel, repeat preceding procedures 7 through 15 for generator set No. 3, then No. 4, etc.

Katolight Service - Master Repair Manual - Page 1362

E. Shutting Down One or More Generators Operating Parallel

Before dropping one or more generators operating parallel from the line bus, it is essential that the total load on the bus is reduced to equal to or less than the combined capacity of the generators remaining on the bus. Shut down one or more of generator sets operating parallel as follows:

1. Reduce load to combined capacity of generators remaining on the bus.
2. On systems where the prime mover governor is equipped with a manual speed adjust, the load can be shifted to generators remaining on the bus by reducing the speed of the generator set being dropped from the bus.
3. Close its unit/parallel switch (on generator sets equipped with a unit/parallel switch).
4. Shutdown the prime mover.
5. In applications where three or more generators are operated parallel, repeat preceding procedures 1 through 4 for each generator set being taken off the bus.

SECTION 5
MAINTENANCE, TROUBLESHOOTING AND VOLTAGE REGULATOR OPERATIONAL TEST

PREVENTIVE MAINTENANCE

The regulator should be periodically inspected to ensure that air flow is not restricted. Dirt, dust, and other foreign material may be removed using low pressure (25 to 50 PSI) compressed air. Connections between the regulator and system should be checked periodically to ensure they are tight and free of corrosion.

CORRECTIVE MAINTENANCE

Repairs to the regulator can be made by following the diagrams in Section 6. Due to a protective conformal coating, repairs on the printed circuit board are difficult and should not be attempted. A test procedure that may be performed to determine if the regulator is basically operational follows the troubleshooting chart.

On generator sets equipped with the auto/manual voltage control option, operation of the generator set in the automatic voltage control mode can be compared to how well it operates in the manual voltage control mode. Faulty operation in the automatic mode and satisfactory operation in the manual mode indicates a problem in the voltage regulator while, if faulty operation in both the automatic and manual voltage control mode occurs, the problem is probably within the exciter or generator.

TROUBLESHOOTING

The more common generator system malfunctions, causes of the malfunctions and appropriate repair procedures are listed in the troubleshooting chart that follows.

Incorrect electrical connections between the generator system and the regulator and poor electrical connections are often the cause of system malfunction. Before assuming a failure of the generator or regulator has occured, check wiring against the wiring diagrams provided with the generator set and the instructions given in Section 3. Also make certain all connections are tight and free of corrosion.

Katolight Service - Master Repair Manual - Page 1364

TROUBLESHOOTING CHART

SYMPTOMS	PROBABLE CAUSE	REMEDY
Voltage does not build up to rated value.	Shutdown switch open.	Close switch.
	Fuse blown.	Replace fuse. If fuse blows repeatedly, determine cause of overload.
	Auto/off/manual switch set to OFF position.	Set to AUTO position.
	Field circuit breaker open.	Close circuit breaker.
	No input power to terminals P1 and P2.	Verify wiring.
	Inaccurate generator voltmeter.	Verify using test voltmeter. Calibrate or replace faulty meter.
	Voltage too low at terminals P1 and P2.	Verify wiring.
	Low residual voltage (or reverse residual).	Flash field. Refer to procedure given in Section 4.
	Internal wire from sensing terminals on regulator not connected to correct tap on sensing transformer (2).	Verify wiring.
	No connections or poor connection between exciter field and regulator terminals F+ and F-.	Connect correctly and flash field to restore residual.
	Prime mover not up to rated speed.	Bring up to speed.
	Open or incorrectly connected external voltage adjust rheostat.	Verify wiring.
	Voltage range adjust R2 set too low.	Refer to procedure given in Section 4.
	Potentiometer R89 out of adjustment.	Factory set adjustment. If accidentally adjusted during operation of the regulator, contact factory.
	Faulty regulator power stage.	Test. If faulty replace the regulator or the power module.

Katolight Service - Master Repair Manual - Page 1365

TROUBLESHOOTING CHART (CONT.)

SYMPTOMS	PROBABLE CAUSE	REMEDY
	Faulty printed circuit board.	Replace the regulator.
	Defective rectifiers in the exciter, defective exciter windings or defective generator.	Verify operation of the exciter and/or generator Refer to generator instruction manual for additional information.
	Generator output heavily loaded.	Remove excessive load.
Voltage builds up until flashing circuitry operates, then oscillates between approximately 1/3 to 2/3 rated voltage.	Faulty printed circuit board.	Replace regulator.
Voltage high and not controllable with voltage adjust rheostat.	No voltage to sensing terminals on regulator.	Verify wiring.
	Open sensing transformer.	Verify wiring and check for open windings.
	Automatic/off/manual switch set to MAN position.	Set to AUTO position for automatic voltage regulation.
	External voltage adjust rheostat shorted.	Verify wiring. Use ohmmeter to test resistance across rheostat. Replace shorted rheostat.
	Internal wire from sensing terminals on regulator not connected to correct tap on sensing transformer(s).	Verify nominal sensing voltage from generator and wiring to sensing transformer(s).
	Faulty regulator circuit board.	Replace regulator.
	Faulty regulator power stage SCR's or diodes.	Replace failed parts or the voltage regulator.
Voltage high, controllable with voltage adjust rheostat.	Internal wire from terminal(s) E2, E3 to wrong tap on sensing transformer(s) T1 and T3.	Verify nominal generator voltage. Correct wiring.
	Improper connection of sensing to regulator sensing terminals.	Verify wiring to regulator.
	Single-phase sensing applied to regulator designed for three-phase sensing.	Connect three-phase sensing.
	Voltage range adjust R2 set too high.	Adjust R2. Refer to procedure given in Section 4.

Katolight Service - Master Repair Manual - Page 1366

TROUBLESHOOTING CHART (CONT.)

SYMPTOMS	PROBABLE CAUSE	REMEDY
	R89 Adjustment.	Factory set. If accidentally turned, contact factory.
	Generator voltmeter inaccurate.	Connect a test voltmeter to check operation of generator output. Calibrate or replace the meter.
	Faulty SCR1 and SCR2.	Replace regulator or power module.
	Faulty regulator circuit board.	Replace the voltage regulator
Poor regulation.	Voltage at regulator terminals P1 and P2 too low at nominal generator voltage.	Input voltage for standard KCR 760 voltage regulators should be 100 to 139 V ac for unit with 65 V dc output, and 200 to 240 V ac where regulator rated output is 125 V dc.
	Jumper not installed across terminals CT⊖ and CT1 while generator operating singly.	Install jumper.
	Unit/parallel switch in PARALLEL position during single generator operation.	For single generator operation place switch in UNIT position.
	Unit/parallel switch of generator not on the bus set to PAR position.	Set switch of generators not on the bus to UNIT position.
	Prime mover not up to rated speed, or prime mover speed fluctuating.	Bring up to rated speed and/or adjust governor.
	Unbalanced load.	Balance load.
	Exciter field resistance too low and/or exciter field volts too low.	Add a series resistor. Resistance should not be less than 6.5 ohms for 65 V dc continuous full load rated regulator or 13 ohms for a 125 V dc regulator. Voltage applied to the exciter field at no load should not be less than 10 V dc and best operation generally occurs when voltage is about 20 V dc during no load operation. The resistor must not limit regulator output during full load operation.
	Faulty regulator circuit board.	Replace the voltage regulator.
	Faulty regulator power stage diodes or SCR's.	Replace the voltage regulator or the faulty components.

Katolight Service - Master Repair Manual - Page 1367

TROUBLESHOOTING CHART (CONT.)

SYMPTOMS	PROBABLE CAUSE	REMEDY
Poor voltage stability.	Stability adjust R6 not adjusted to provide sufficient stabilizing signal.	Adjust R6. Refer to procedure given in Section 4.
	Frequency unstable.	Adjust prime mover governor.
	No-load field voltage and/or resistance too low.	See symptom "Poor regulation."
	Voltage at regulator input power terminals P1 and P2 too low.	See symptom "Poor regulation."
	Voltage fluctuated to point where flashing circuit energizes or de-energizes.	Replace the circuit board or the voltage regulator.
	Faulty circuit board or regulator power stage SCR's and/or diodes.	Replace voltage regulator.
	Fault in exciter or generator.	Verify exciter and generator operation.
Voltage recovery slow on load change.	Stability adjust R6 maladjusted.	Adjust R6. Refer to procedure given in Section 4.
	Slow prime mover response.	Check speed governor operation; adjust as necessary.
	Exciter field resistance too high.	Refer to specifications given in Section 1. Resistance must not limit regulator output.
	Voltage regulator capacity less than exciter requirements.	Wrong application of voltage regulator. Refer to regulator specifications given in Section 1.
	Generator and/or prime mover overloaded.	Reduce load to rated.
Underfrequency limit (UFL) operates at too high frequency or too low frequency.	Prime mover needs adjustment.	Verify governor operation, adjust as required.
	Incorrect use of 50/60 or 400 hertz selector J1.	Correct use of jumper J1 is given in Section 3.
	Wrong voltage regulator.	Contact factory.
	UFL threshold adjust (R55) not adjusted correctly.	Adjust R55. Refer to procedure given in Section 4.

Katolight Service - Master Repair Manual - Page 1368

TROUBLESHOOTING CHART (CONT.)

SYMPTOMS	PROBABLE CAUSE	REMEDY
No droop compensation can be obtained for parallel generators.	Jumper across terminals CT• and CT1.	Remove jumper.
	Unit/parallel switch closed (set to UNIT position.)	Set switch on generator sets to PAR position. Leave switch in the UNIT position on any generators that will remain shutdown .
	Parallel droop adjust R4 set to minimum droop position.	Turn R4 clockwise to increase droop.
	Parallel CT does not supply the correct secondary current.	Where 1 ampere CT is used, connect to regulator terminals CT• and CT1. Terminals CT• and CT5 are for use with 5 ampere CT. Consult factory, giving generator rated line current and voltage. Verify that the number of turns on generator line through transformer are correct.
Voltage rises instead of droops on application of inductive load.	Wrong polarity between parallel CT secondary leads and regulator terminals.	Interchange leads at terminals CT• and CT1. Where 5 ampere CT is used, terminals will be CT• and CT5.
Parallel generators do not divide reactive kVAR load equally resulting in circulating reactive current between generators.	Terminals CT• and CT1 or CT5 shorted by jumper or unit/parallel switch.	Remove jumper. Set switch to PAR position.
	Unequal adjustment of voltage droop potentiometers.	Adjust for equal droop.
	Droop resistors on generators operating parallel set at different droop position.	Adjust R1 on all generators for identical droop. Refer to procedure given in Section 4.
	Wrong parallel CT or wrong ampere turns through the CT primary.	Consult factory, giving generator set details.
	Parallel CT not in correct generator line.	Verify wiring.
	Parallel CT polarity reversed.	Interchange CT secondary leads at regulator terminals. CT• and Ct1 are for use with 1 ampere CT. CT• and CT5 are for use with 5 ampere CT.
Parallel generators do not divide kW load equally.	Improper setting of power sensing of governor.	Adjust governor.

VOLTAGE REGULATOR OPERATIONAL TEST

Connect regulator as shown in Figure 10. Perform operational test as given in the procedure that follows.

1. Connect internal wire from terminal E3 to the tap on sensing transformer T1 that matches the input power described in step 5.
2. Connect jumper across terminals CT0 and CT1.
3. Adjust the external voltage adjust for maximum resistance (complete counterclockwise position). If light is on when voltage adjust is turned to its complete counterclockwise position, the problem is likely in the regulator.
4. Connect light bulb across terminals F+ and F- and wires to terminal E1, E3, P1, and P2 as shown in Fig. 10.
5. Connect to 120 V ac power source when regulator full load output rating is 65 V dc. Connect to 240 V ac power source when regulator full load output rating is 125 V dc.
6. Turn the external voltage adjust clockwise. Before reaching the maximum clockwise position the bulb should come on to near full brilliance.
7. At the regulating point a small change in adjustment of the external voltage adjust rheostat should turn the light on or off. If the light does not come on, the problem is likely in the regulator.
8. Before installing back in generating system, connect regulator as it was before steps 1 through 6.

SECTION 6
DRAWINGS AND PARTS LIST

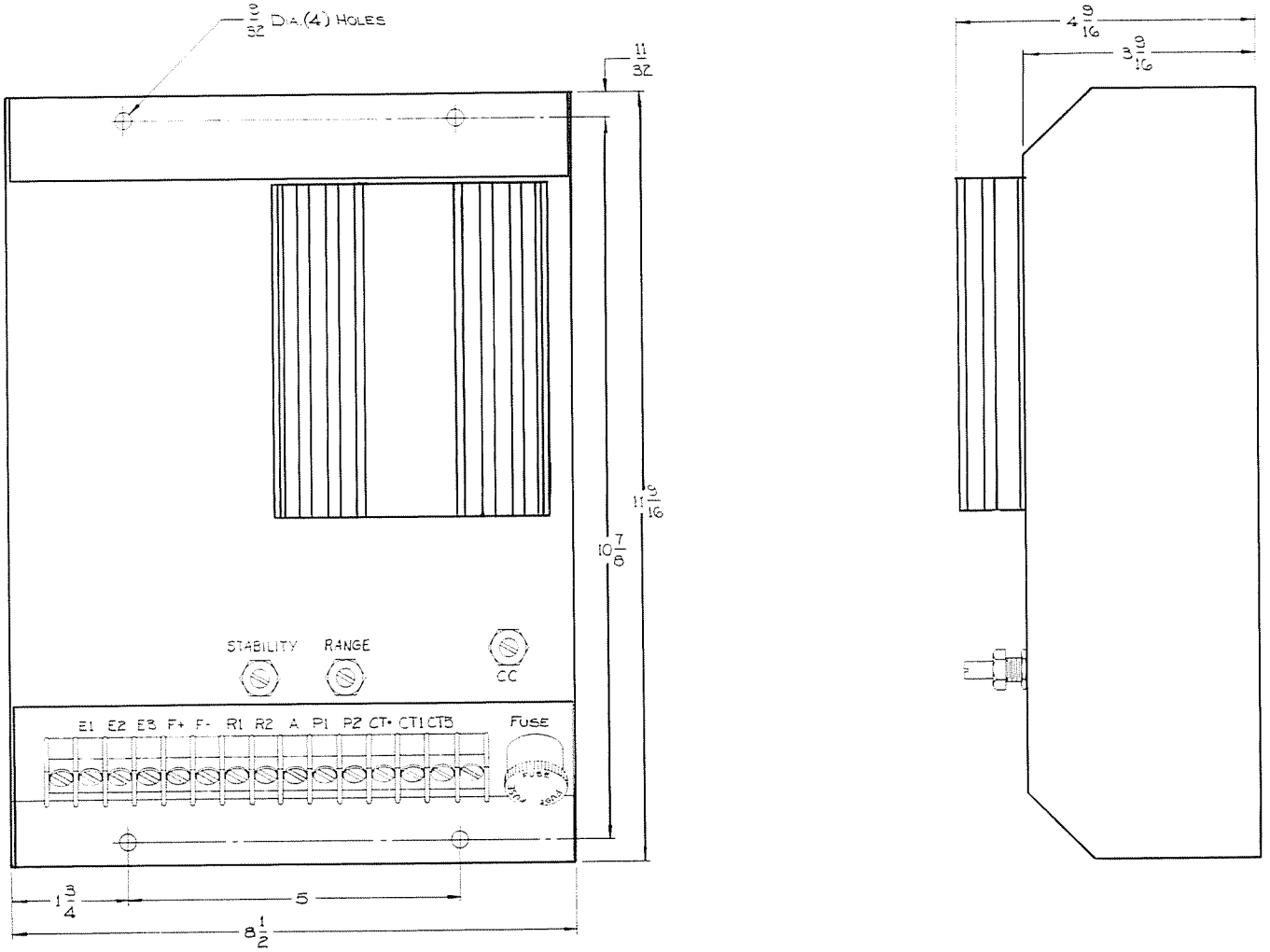

Fig. 1 KCR 760 Regulator Outline Drawing

(Drawing Number 412-76001-00 sheet 1)

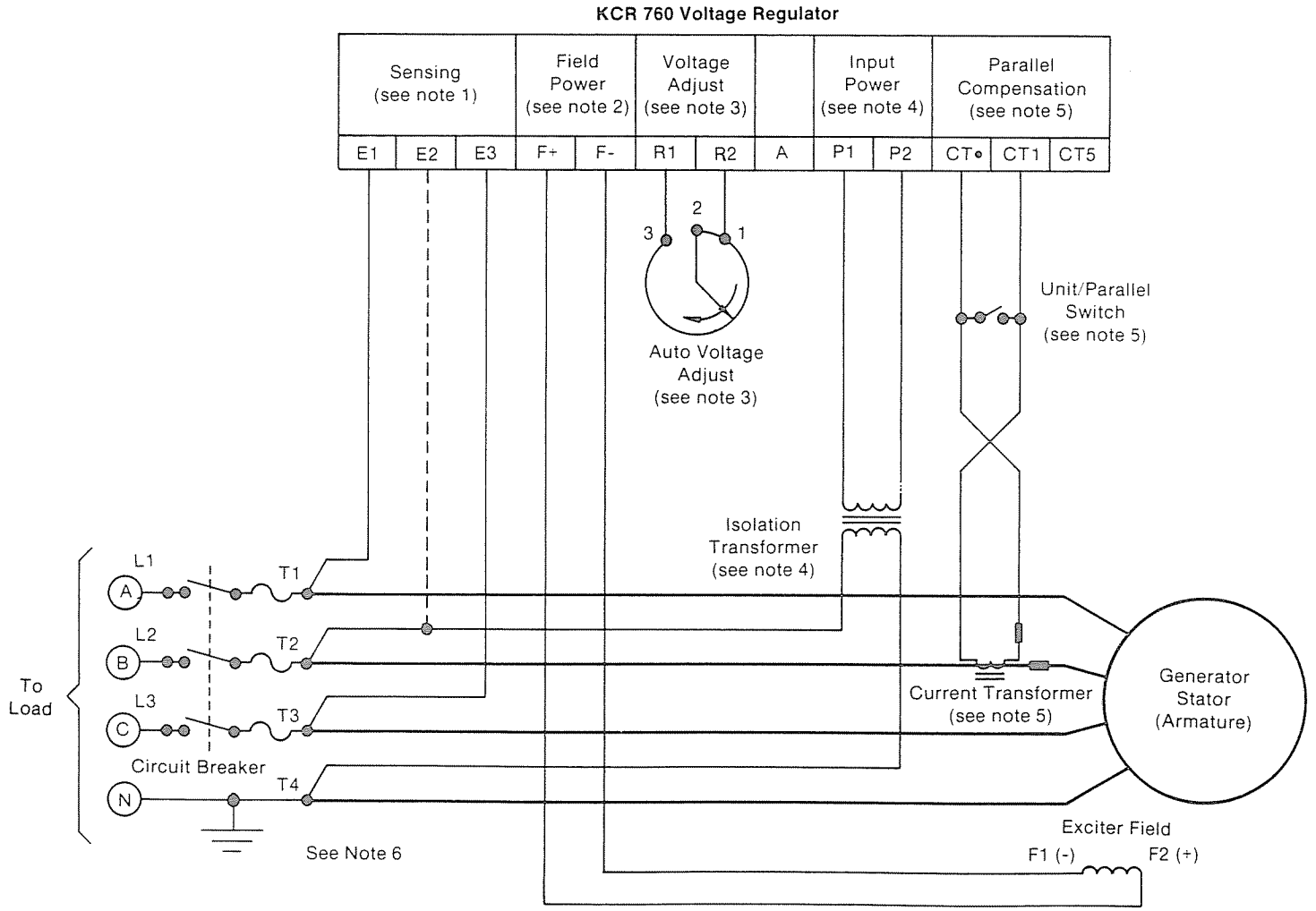

NOTES

1. For single phase sensing, terminals are E1 and E3. For three phase sensing, terminals are E1, E2, and E3. See Figures 3 and 4.
2. Field must not be opened, shorted or grounded while generator is operating.
3. External voltage adjust must have jumper across its terminals 1 and 2.
4. Input power standard KCR 760 voltage 120 V ac; optional 240 V ac. Maximum continuous dc output 65 V dc for 120 V ac input; 130 V ac for 240 V ac output. See Figures 3 and 4.
5. Current transformer required for generators operating in parallel. Connection shown on this drawing: one-ampere current transformer and reactive voltage droop compensation. See Figures 3 and 4.
6. Ground neutral in accordance with applicable electrical code.

Fig. 2 Typical KCR 760 Voltage Regulator Interconnection

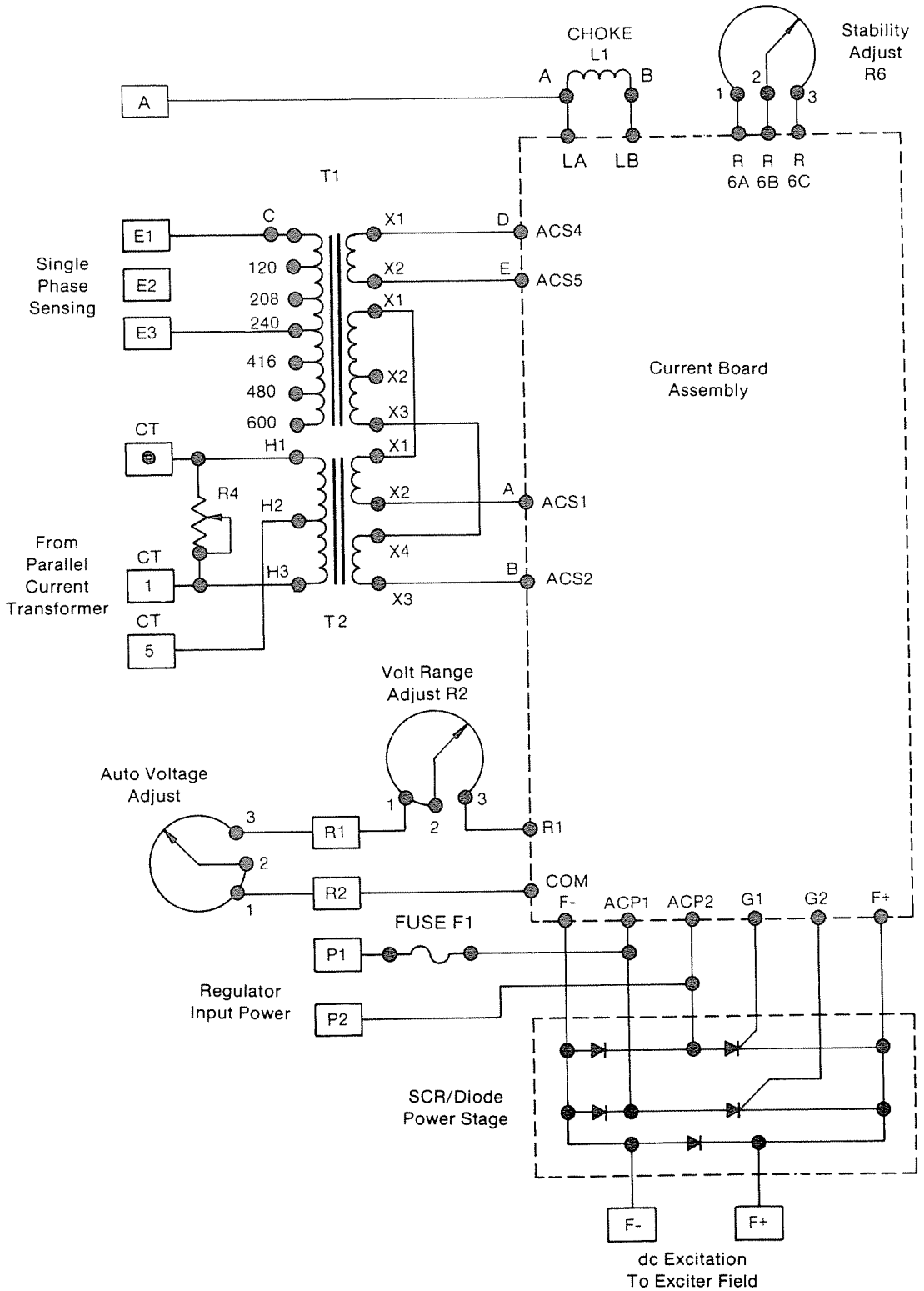

Sensing: Use sensing terminals E1 and E3. Internal wire from E3 must connect to tap on T1 that matches generator voltage.

Parallel Operation: External current transformer required for parallel operation. Where current transformer has 1 amp secondary, connect to terminals CT• and CT1. Where current transformer has 5 amp secondary, connect to terminals CT• and CT5. For single generator operation remove droop signal by adjusting R4 to zero resistance measured across terminals CT• and CT1.

Fuse F1: Normal blow, 15 amp maximum for voltage regulator protection.

Input Power: For 120 V ac input, 65 V dc output: install circuit board jumper J3. For 240 V ac input, 125 V dc output: remove circuit board jumper J3.

Fig. 3 Schematic Diagram, Single-Phase Sensing for KCR 760 Voltage Regulator

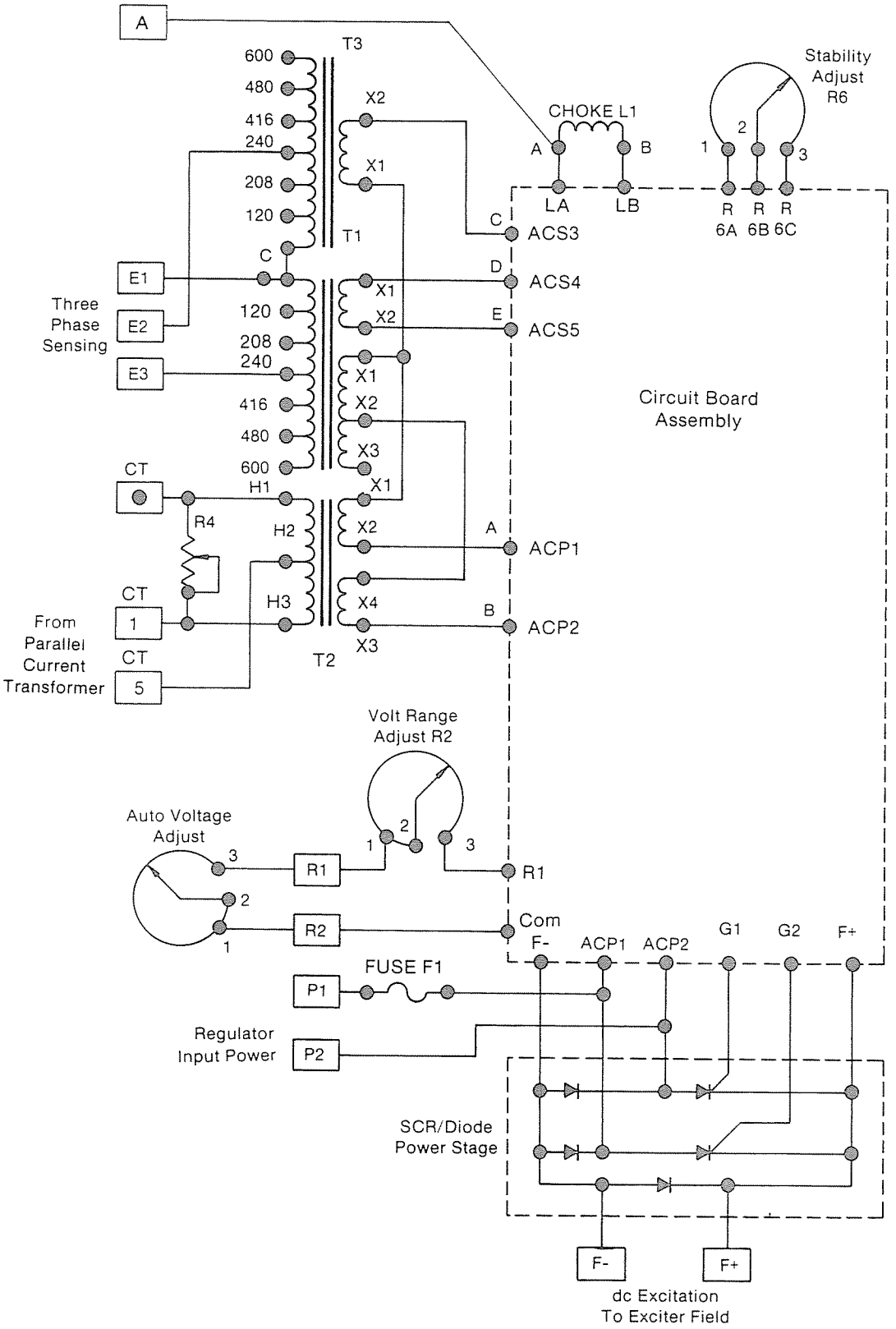

Refer to procedures given on Fig. 3. Three phase sensing uses terminals E1, E2, E3 and sensing transformers T1 and T3. Wire from E2 must connect to tap on T3 that matches generator voltage. Wire from E3 must connect to tap on T1 that matches generator voltage.

Fig. 4 Schematic Diagram, Three Phase Sensing KCR 760 Voltage Regulator

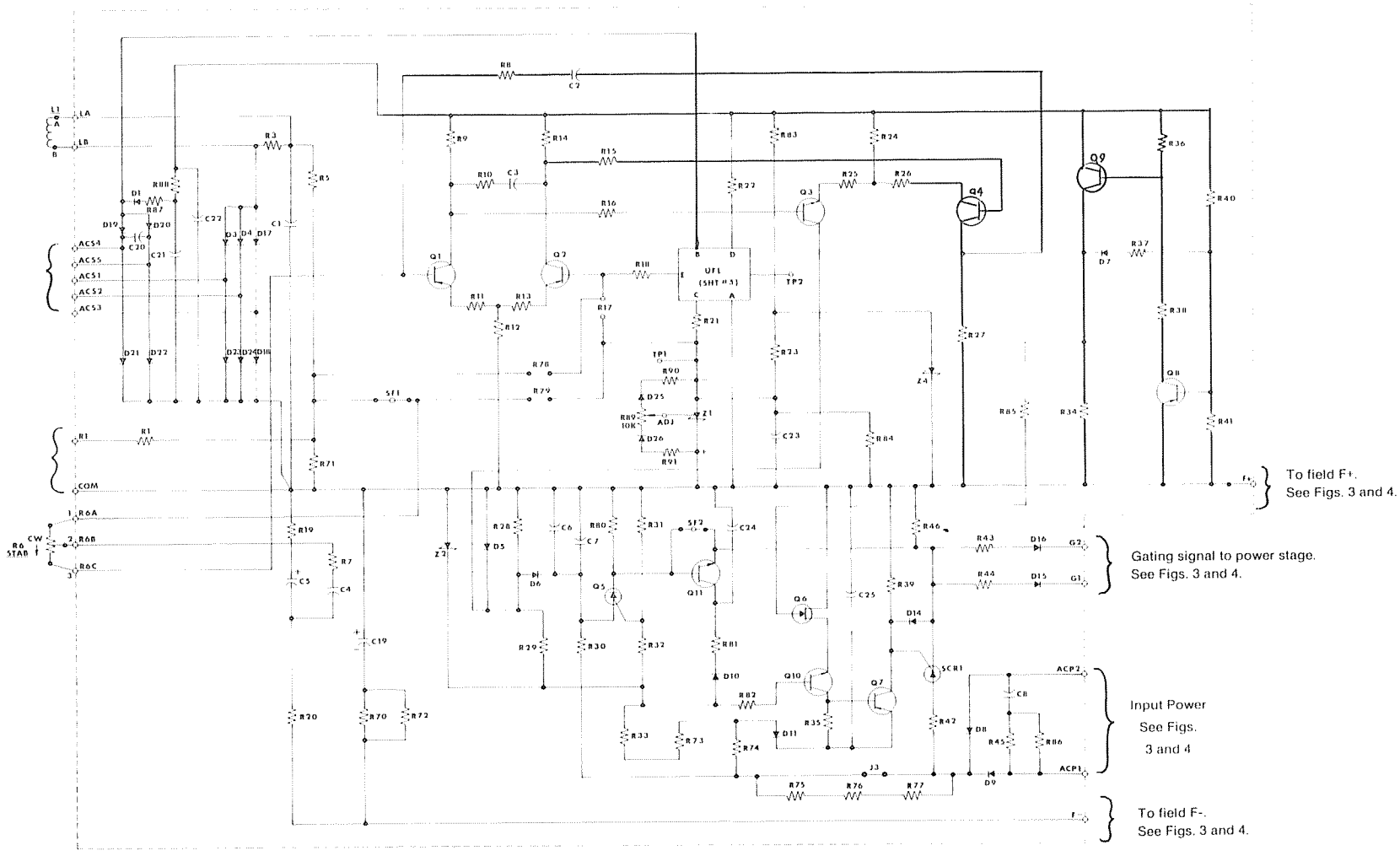

NOTE: Jumper J3. Install where input is 120 V ac; remove where input is 240 V ac.
For schematic of UFL circuitry, see Fig. 7.

Fig. 5 Circuit Board Schematic, KCR 760 Voltage Regulator with UFL or Volts-Per-Hertz Circuitry.
(Drawing Number 412-76001-00 sheet 2)

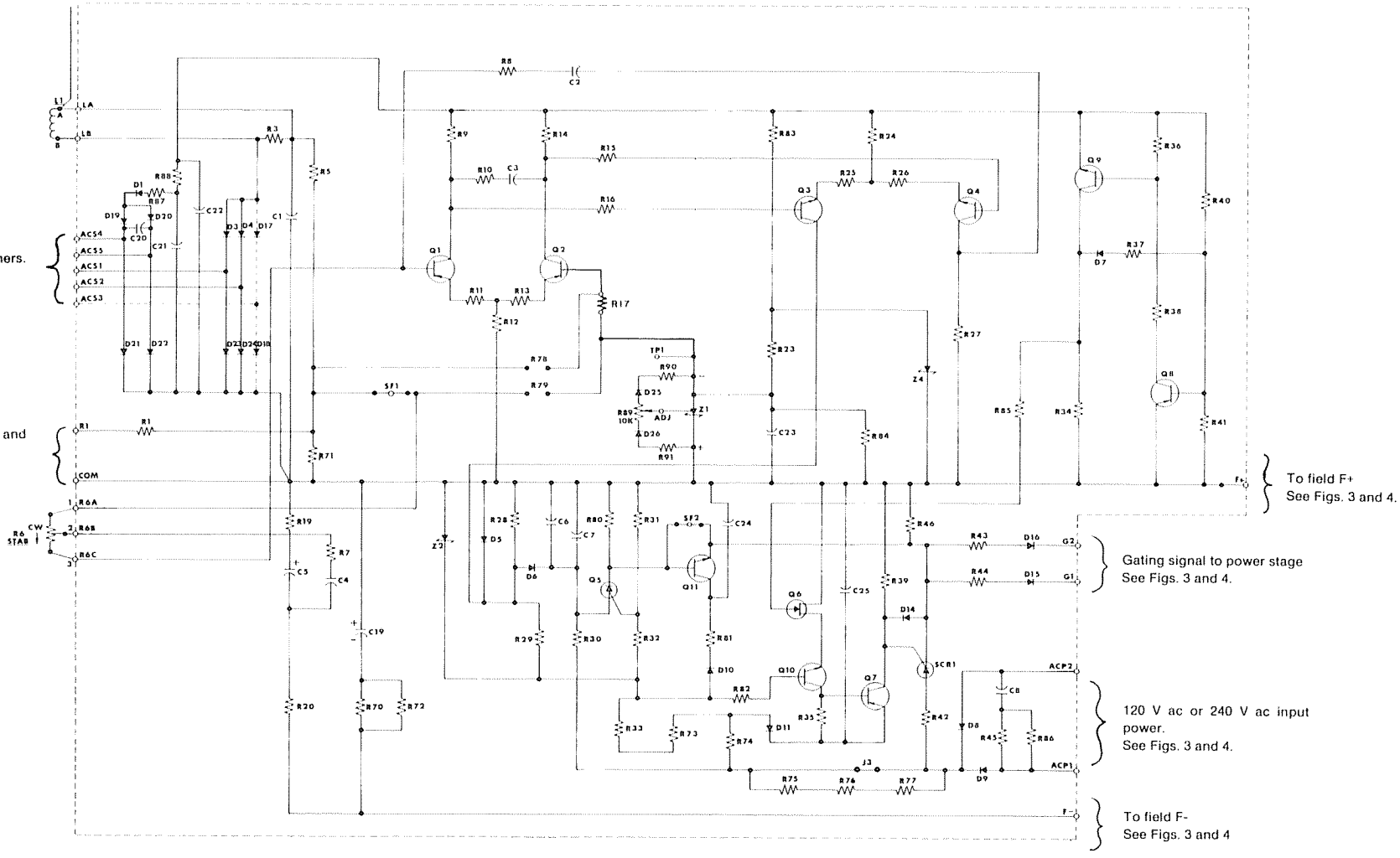

NOTE: JUMPER J3: Install where input is 120 V ac; remove where input is 240 V ac.

Fig. 6 Circuit Board Schematic for KCR 760 Voltage Regulator with Flat Regulation Option (Drawing Number 412-76001-00 sheet 2)

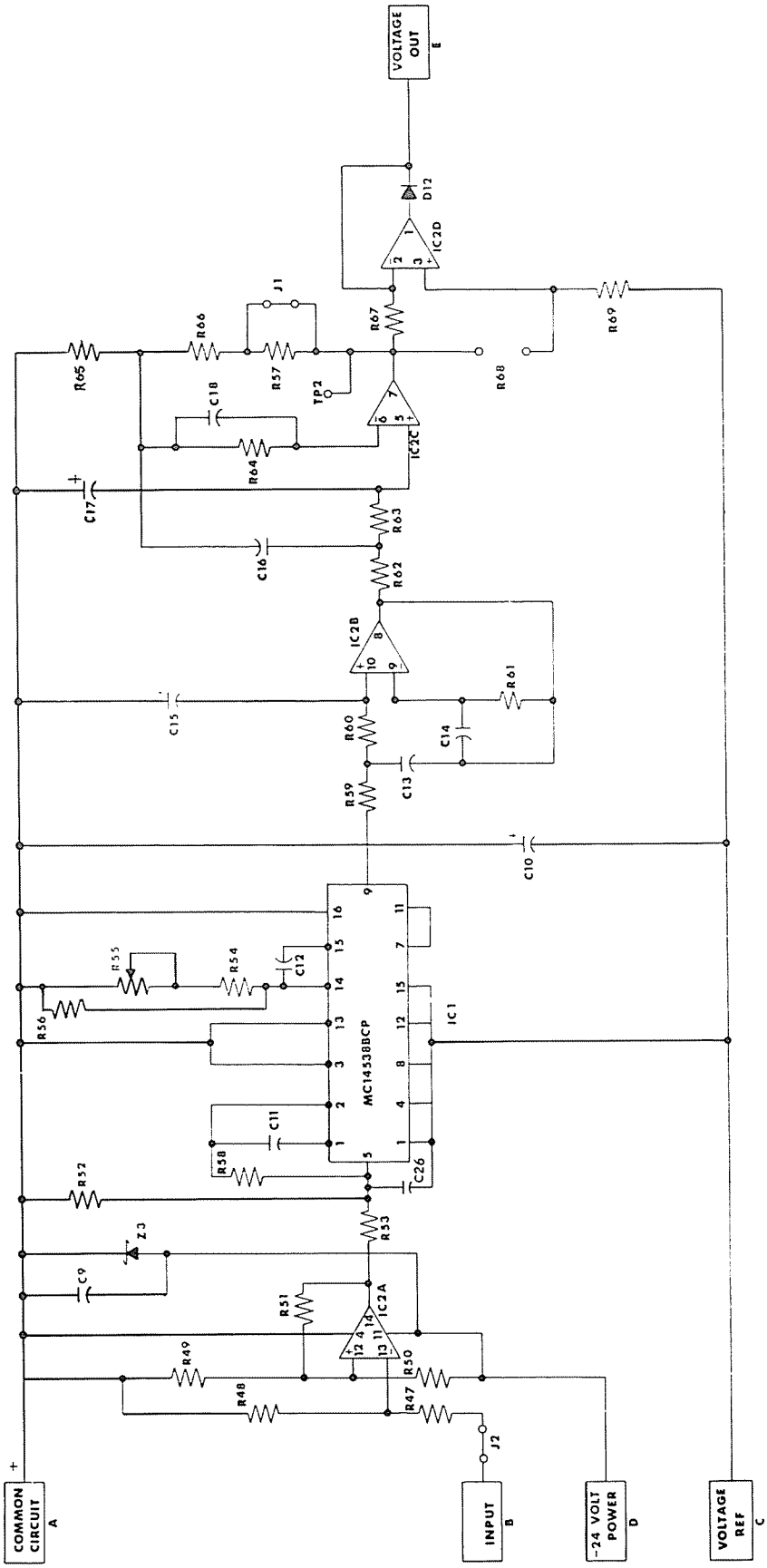

Fig. 7 Electrical Schematic Diagram; Underfrequency Limit (UFL)
(Drawing Number 412-76001-00 sheet 3)

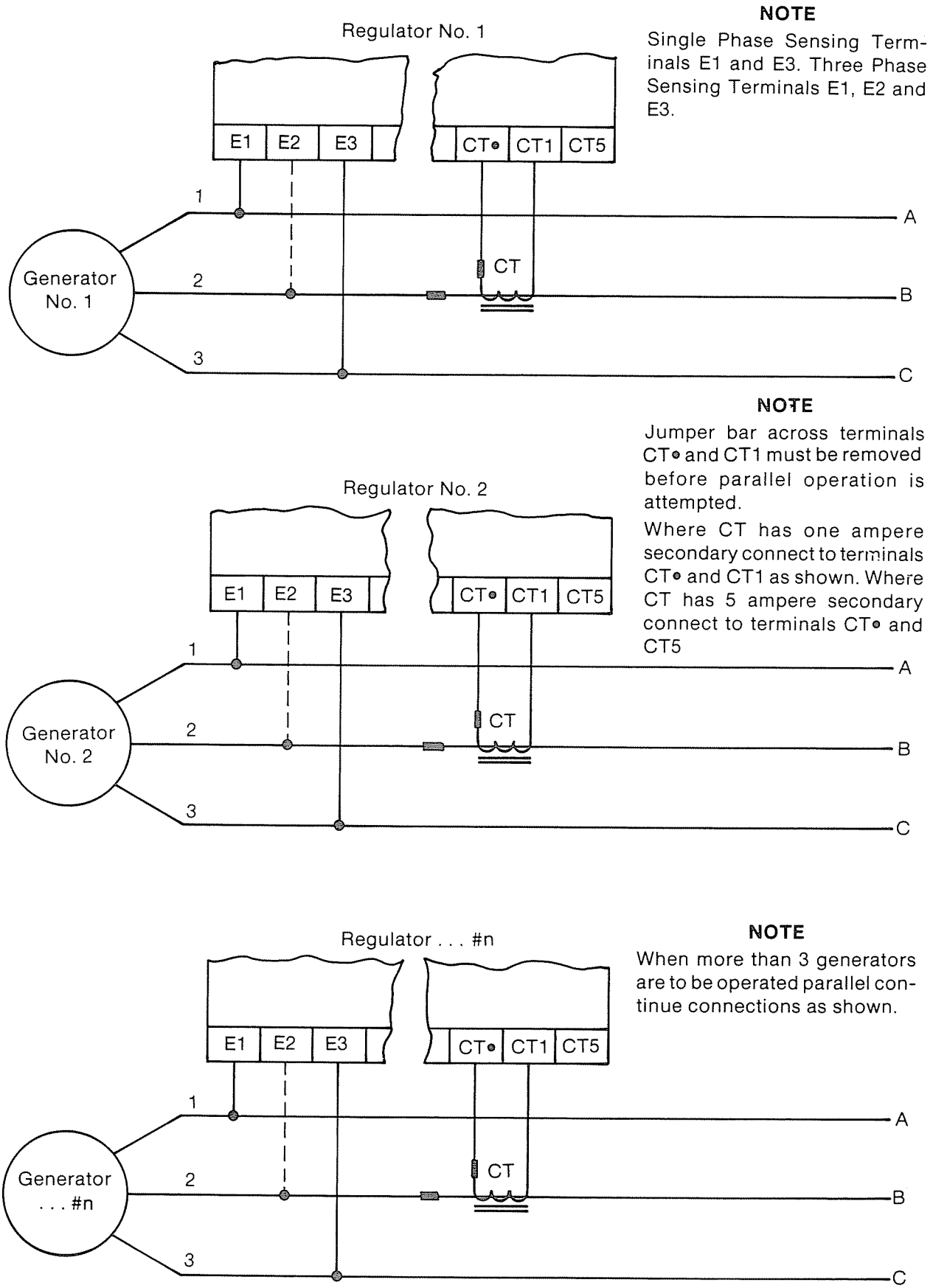

Fig. 8 Interconnection Diagram, Parallel Voltage Droop

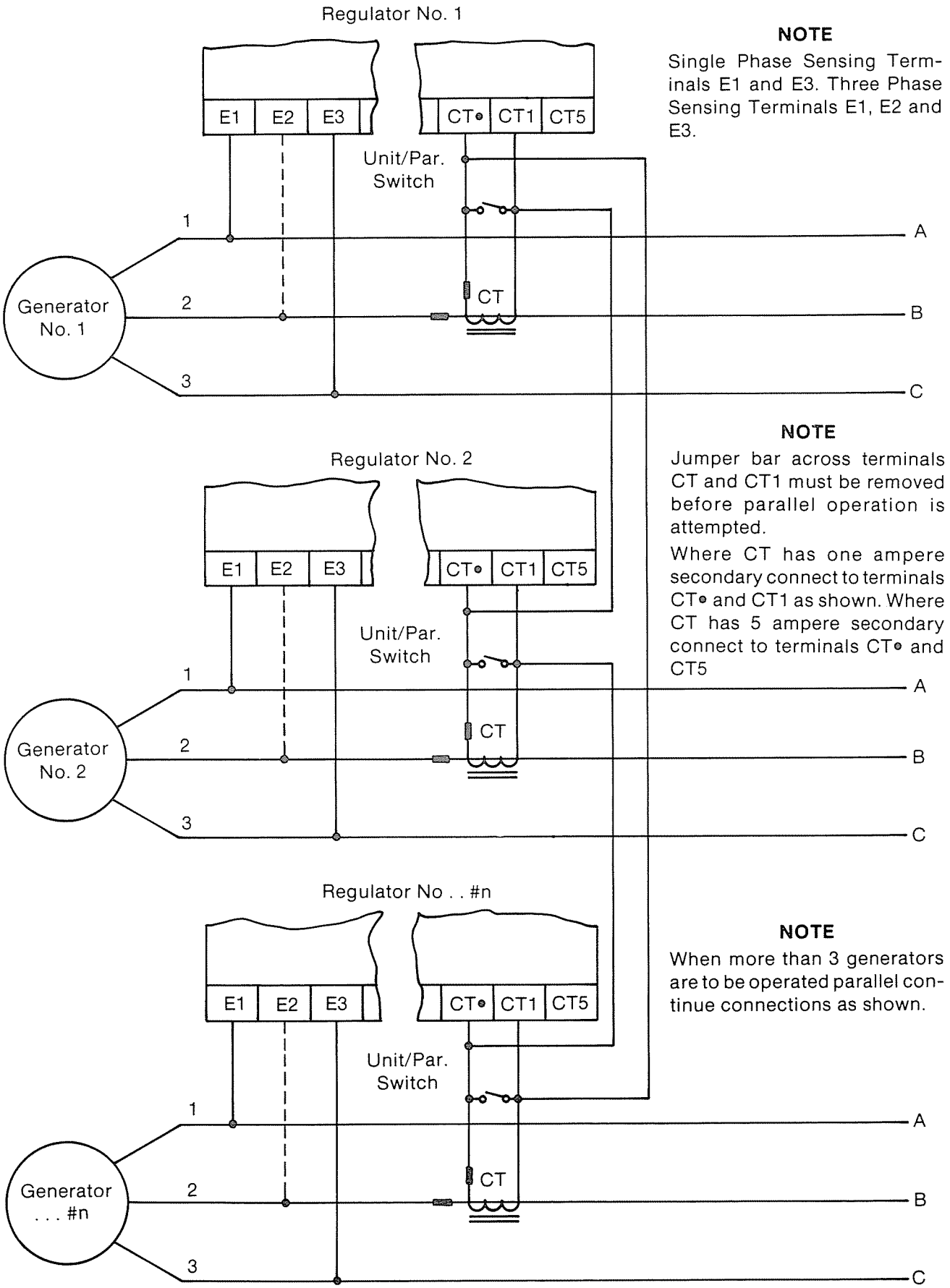

Fig. 9 Interconnection Diagram, Cross-Current Compensation

Follow the test procedure given in Section 5 in this manual.

Internal wire from E3 must connect to 120 V ac tap on transformer T1.

120 V ac may be used to test voltage regulators designed for 120 V ac or 240 V ac input power.

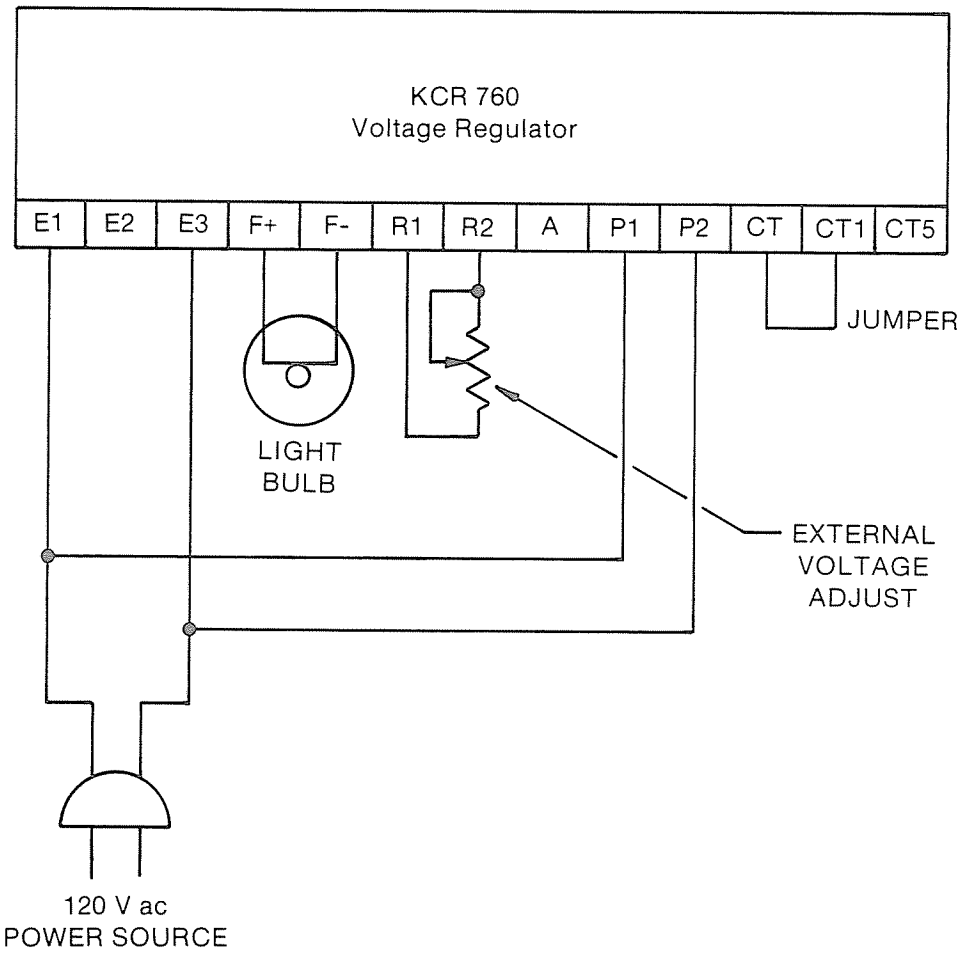

Fig. 10 KCR 760 Operational Test

P.O. Box 47, Mankato, Minnesota 56001 / TLX: 29-0786 / (507) 625-4011 / **351-01002-00**

KATO ENGINEERING
RELIANCE ELECTRIC

INSTRUCTION MANUAL
FOR
VOLTAGE REGULATOR
Models: KR2F/FM, KR2FF/FFM
KR4F/FM, KR4FF/FFM
KR7F/FM, KR7FF/FFM

Part Numbers: 9 1160 00 XXX through 9 1165 00 XXX

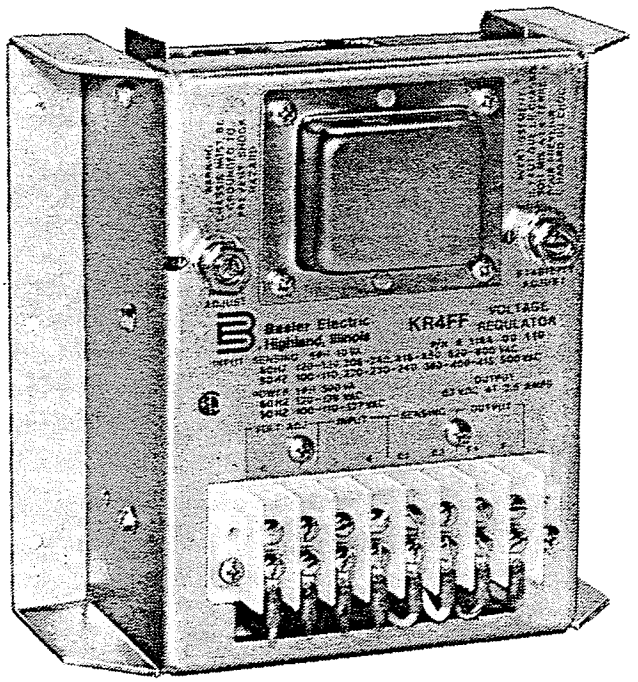

Basler Electric
Highland, Illinois

Publication Number: 9 1160 00 99X
Date: December, 1976
Revision A: October, 1985

© 1985 by Basler Electric Company

WARNING

To prevent personal injury or equipment damage, only qualified technicians/operators should install, operate or service this device.

CAUTION

Meggers and high potential test equipment must not be used. Incorrect use of such equipment could damage components contained in the device.

CONFIDENTIAL INFORMATION

OF BASLER ELECTRIC COMPANY, HIGHLAND, ILL. IT IS LOANED FOR CONFIDENTIAL USE, SUBJECT TO RETURN ON REQUEST, AND WITH THE MUTUAL UNDERSTANDING THAT IT WILL NOT BE USED IN ANY MANNER DETRIMENTAL TO THE INTERESTS OF BASLER ELECTRIC COMPANY

REV	ECA
A	7305

Katolight Service - Master Repair Manual - Page 1384

SECTION 1.0

GENERAL INFORMATION

1.1 GENERAL

The KR series of Basler voltage regulators control generator output voltage by regulating the amount of current to the exciter field. They include Electromagnetic Interference (EMI) filtering. Underfrequency roll-off characteristic is a built-in feature of the KR-FF series. The operation and specifications of the KR-FM are identical to the KR-F. The same applies for the KR-FFM and the KR-FF.

1.2 SPECIFICATIONS

The following specifications are applicable to both the KR-F and KR-FF series voltage regulators except as noted.

Input Power	See Table 1-1
Output Power	See Table 1-1
Input Sensing Voltage	120-139/208-240/416-480/520-600 Vac ±10%(60 Hz); 100-110/220-230-240/380-400-415/500 Vac ±10%(50 Hz)
Phase	Single
Burden (maximum)	10 Va
Field Resistance	See Table 1-1
Regulation Accuracy	±1% maximum over full range of alternator/generator loading and 5% frequency variation.
Regulator Response	Less than 17 milliseconds (20 milliseconds on 50 Hz)
Regulator Drift	Less than 1% for a 72°F (40°C) ambient temperature change.
Voltage Adjust Range	Minimum ±10% of nominal voltage
Regulator Sensing	Single Phase
Operating Temperature Range	-40°F (-40°C) to +140°F (+60°C)
Storage Temperature Range	-85°F (-65°C) to +185°F (+85°C)
Power Dissipation	Less than 20 watts at maximum continuous rating.

Katolight Service - Master Repair Manual - Page 1385

Underfrequency Operational Threshold (KRFF series only):	54 Hz nominal in 60 Hz systems. See Figure 1-2 44 Hz nominal in 50 Hz systems. See Figure 1-3
Mounting:	The unit is designed to operate when mounted directly on diesel or turbine driven generator systems. It can also be mounted in switchgear or control panels.
Shock:	Withstands up to 20 G's in each of three mutually perpendicular planes.
Vibration:	Withstands 5 to 26 Hz @ 1.2 G's; 27 to 52 Hz @ .036 double amplitude; 53 to 260 Hz 5.0 G's.
Electromagnetic Interference (EMI) Filtering	See Figure 1-1
Weight	6.0 lbs. net (2.718 kg); 7.0 lbs. shipping (3.171 kg)

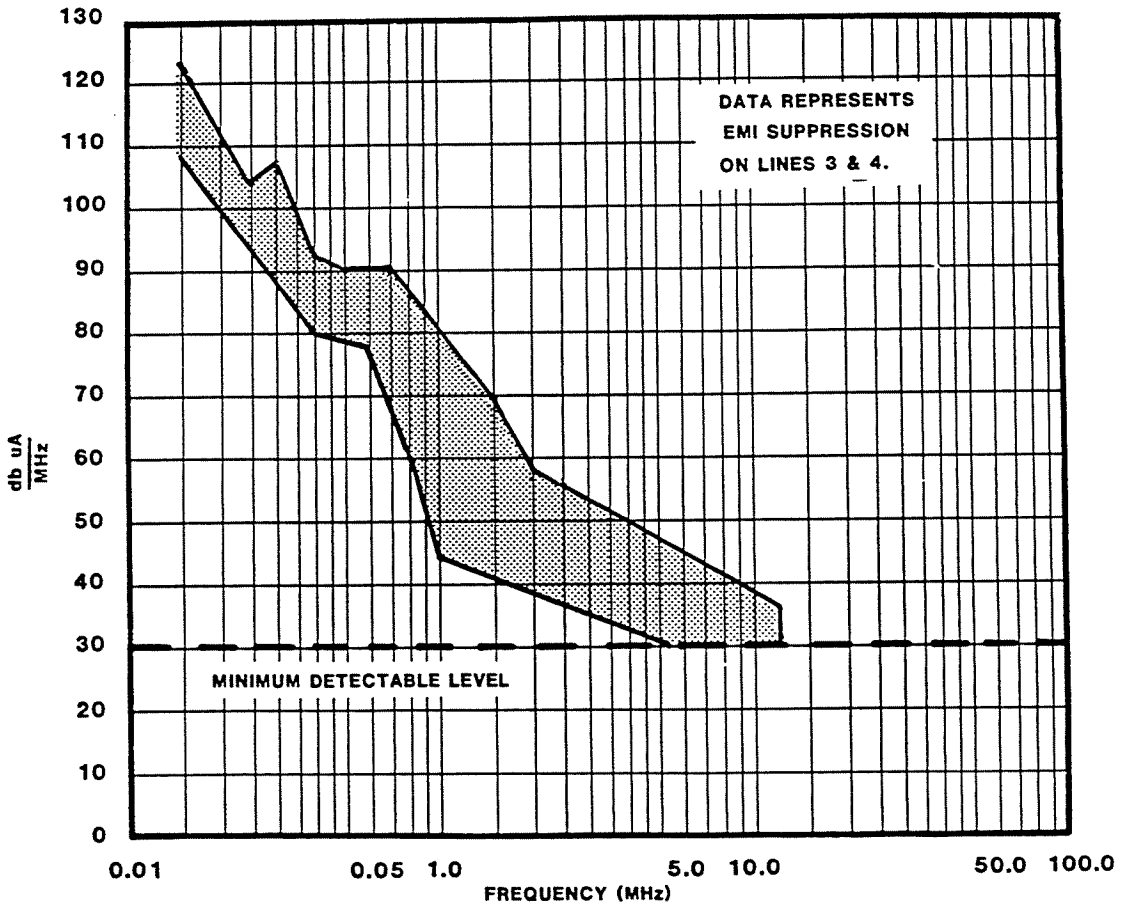

Figure 1-1 Typical Suppression of Conducted EMI

Basler Electric
Highland, Illinois
Katolight Service - Master Repair Manual - Page 1386

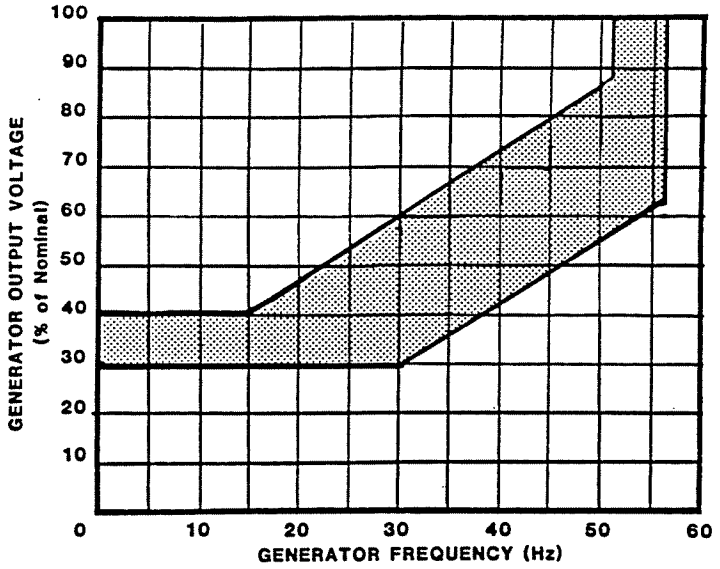

Figure 1-2 Voltage-Frequency Roll-Off Curve.
(60 Hertz System KR-FF Series Only)

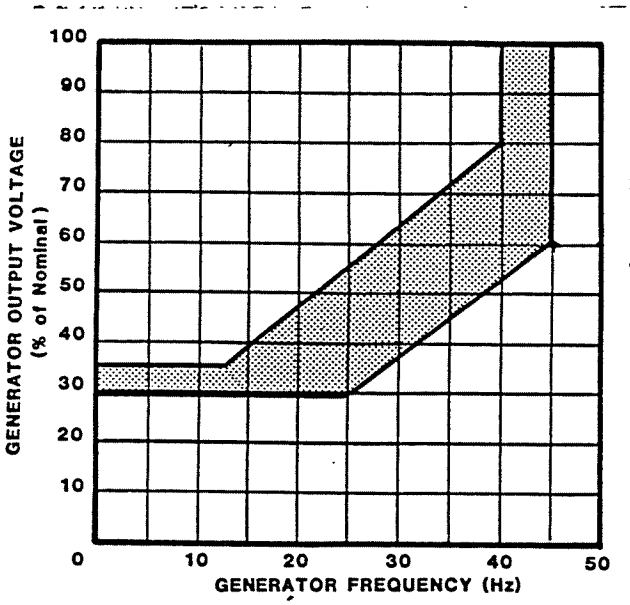

Figure 1-3 Voltage-Frequency Roll-Off Curve.
(50 Hertz System KR-FF Series Only)

Basler Electric
Highland, Illinois
Katolight Service - Master Repair Manual - Page 1387

Table 1-1. Power Requirements

MODEL	PART NUMBER	POWER INPUT (1)			POWER OUTPUT				FIELD RESISTANCE		UNDER-FREQUENCY ROLL-OFF
					MAXIMUM CONTINUOUS		1 MINUTE FORCING				
		AC VOLTS (3)	FREQ. (Hz)	BURDEN (VA)	VOLTS DC	AMPS DC	(4) VOLTS DC	AMPS DC	MIN. OHMS	MAX. OHMS	
KR2F/FM (2)	9 1160 00 XXX	120-139 100-127	60 50	640 640	32	8	45	12	4.25	400	NO
KR4F/FM	9 1161 00 XXX	120-139 100-127	60 50	300 300	63	2.5	90	3.5	25	400	NO
KR7F/FM	9 1162 00 XXX	208-277 220-240	60 50	840 840	125	3.5	180	5	36	400	NO
KR2FF/FFM (2)	9 1163 00 XXX	120-139 100-127	60 50	640 640	32	8	45	12	4.25	400	YES
KR4FF/FFM	9 1164 00 XXX	120-139 100-127	60 50	300 300	63	2.5	90	3.5	25	400	YES
KR7FF/FFM	9 1165 00 XXX	208-277 220-240	60 50	840 840	125	3.5	180	5	36	400	YES

NOTES:

(1) If correct voltage is not available, a suitable power transformer must be used.

(2) When using a transformer with this regulator, use an airgap isolation transformer.

(3) All voltage ranges in Vac, Plus or Minus 5%.

(4) Voltage forcing ratings based on the following inputs: KR2F, KR2FF, KR4F, KR4FF - 120 Vac
KR7F, KR7FF - 240 Vac

Katolight Service - Master Repair Manual - Page 1388

SECTION 2.0

PRINCIPLES OF OPERATION

(Refer to Figure 2-1)

2.1 EMI FILTERING

Power for the regulator is applied to terminals 3 and 4 and then to an electromagnetic interference (EMI) filter which reduces the interference generated by the regulator. The output of the filter is applied to the Thyristor Power Stage.

2.2 THYRISTER POWER STAGE

It is the conduction time of the Thyristor Power Stage that determines the amount of output current to the generator exciter field. Conduction time, in turn, is controlled by the timing of gating pulses from the Sensing and Gating Circuitry. The greater the time of conduction of the thyristor(s), the greater the output voltage.

2.3 GENERATOR SENSING

The generator sensing voltage is connected at E1 and E3. The tap selection on the primary winding of the transformer is as shown in paragraph 3.4. The output voltage from one of the sensing transformer secondary windings is rectified and a representative sample, taken from a voltage divider network is applied to the Sensing and Gating Circuitry.

2.4 SENSING AND GATING CIRCUITRY

The Sensing and Gating Circuitry is comprised of electronic components which sense any change in generator output voltage and translate such changes into gating pulses. The gating pulse is sent to the Thyristor Power Stage to permit it to conduct and provide the correct exciter field current to maintain a constant generator voltage. When the Sensing and Gating Circuitry determines that generator output is low, the gating pulse is applied to the thyristor(s) earlier in the cycles causing a greater output current to flow. When the generator output voltage is high, the gating pulse is applied later in the cycle causing less current to flow to the exciter field.

2.5 VOLTAGE BUILD-UP

When the generator is first placed into operation, the Thyristor Power Stage is bypassed through the closed contacts of K1. During this time, residual generator voltage is rectified and applied directly to the generator exciter field. When the generator voltage builds up to a sufficient value, K1 energizes and gating pulses are applied to the Thyristor Power Stage, as required, from the Sensing and Gating Circuitry.

Katolight Service - Master Repair Manual - Page 1389

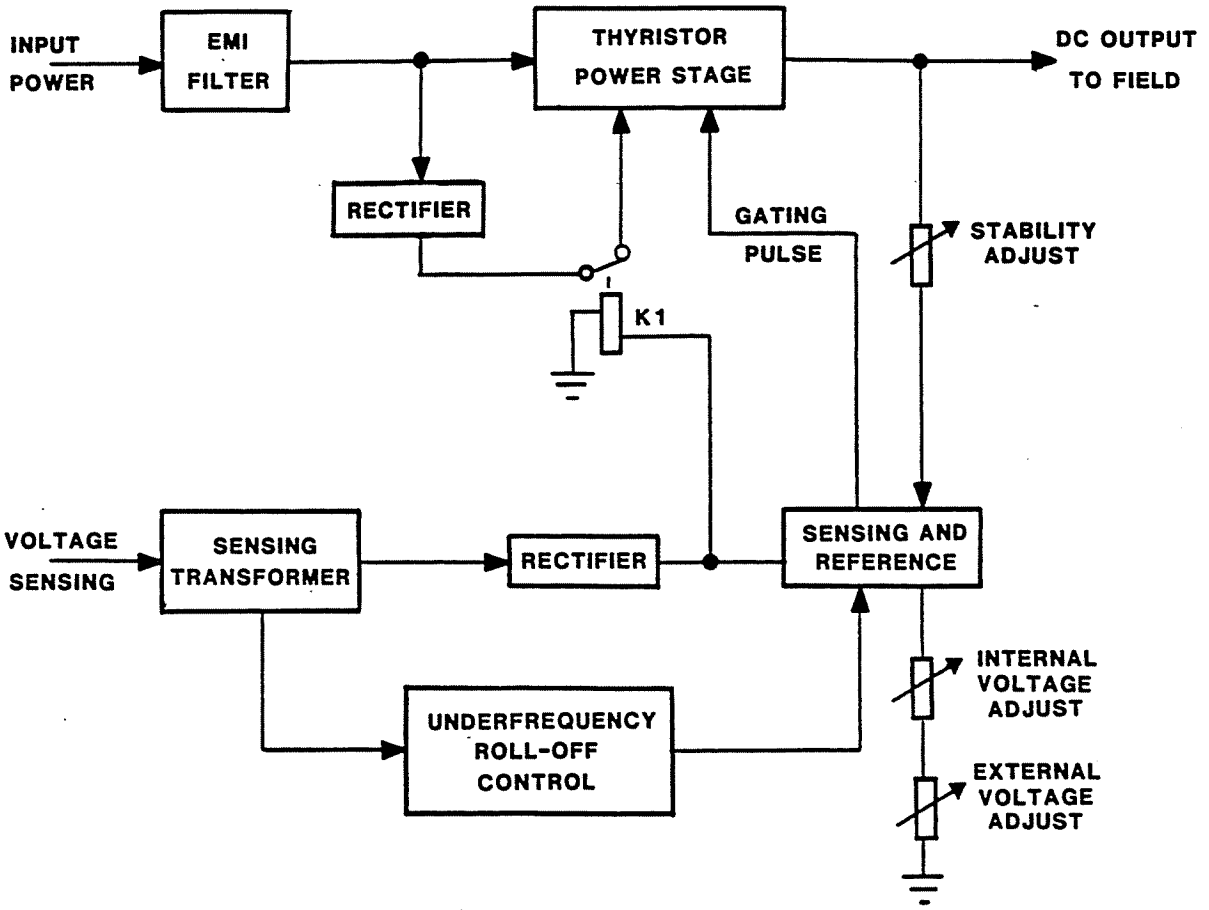

Figure 2-1. Block Diagram.

Basler Electric
Highland, Illinois
Katolight Service - Master Repair Manual - Page 1390

2.6 STABILITY ADJUSTMENT

A feedback signal taken from the F1 terminal is applied to the Sensing and Gating Circuitry. This signal, controlled by the stability adjustment prevents voltage from hunting or oscillating. (Refer to paragraph 3.3)

2.7 INTERNAL VOLTAGE RANGE ADJUSTMENT

This control permits adjustment of the External Voltage Adjust Rheostat range (refer to paragraph 3.2).

2.8 EXTERNAL VOLTAGE ADJUST RHEOSTAT

The external voltage adjust rheostat connected across terminals 6 and 7 allows adjustment of generator voltage ±10% of nominal. (Refer to paragraph 3.1).

2.9 UNDERFREQUENCY CONTROL (KR-FF ONLY)

The output from a secondary winding of the generator sensing transformer is applied to the Underfrequency Control Circuit. This circuit reduces the regulator output current to the exciter field when the generator is operated at less than rated speed. The percentage of generator output voltage that will be obtained for a specific reduction in frequency is illustrated in Figures 1-2 and 1-3. The horizontal axis of each graph represents generator frequency and the vertical axis represents percent of nominal generator output voltage. The operational envelope (shaded area) indicates the limits within which generator output voltage will be reduced. The shaded area is primarily a function of operational temperature and normal tolerances in components. Typical curves will track between the two extremes, usually closer to the upper limit than the lower. The operation threshold is factory set at 54 Hz for 60 Hz generators and 44 Hz for 50 Hz generators.

Basler Electric
Katolight Service - Master Repair Manual - Page 1391

SECTION 3.0
CONTROLS AND INDICATORS

3.1 EXTERNAL VOLTAGE ADJUST

This 500 ohm, 25 watt rheostat is supplied as a separate item for panel mounting. It provides adjustment of the regulated generator voltage ±10% of nominal. When connected as shown in Figure 4-1 adjusting it to its maximum resistance position (CCW), minimum generator voltage is obtained. Maximum generator voltage is obtained with minimum resistance (CW).

3.2 VOLTAGE RANGE ADJUSTMENT

This screwdriver adjustment is factory set to establish the nominal ranges of sensing voltage associated with 60 Hz operation. If 60 Hz sensing is employed, this control need not normally be adjusted.

When nominal 50 hz sensing voltages are required, this control is used to establish the desired nominal sensing voltage. This is done in the following manner: (1) set the External Voltage Adjust Rheostat (paragraph 3.1) to the middle of its adjustment range, (2) insure that the appropriate sensing voltage connection is made (paragraph 3.4) and that the 50 Hz connection is made (paragraph 3.5), (3) with the regulator properly connected into the system (Figure 4-1) bring the generator up to rated frequency (50 Hz), (4) while watching the generator voltmeter, adjust the Internal Voltage Range Adjustment until the nominal generator voltage is obtained. (Voltage increases with CW rotation). After the Internal Voltage Range Adjustment has been properly set, the External Voltage Adjust Rheostat will provide voltage adjustment ±10% of nominal. NOTE: This voltage range adjustment capability exists with 60 Hz operation as well.

3.3 STABILITY ADJUSTMENT

This screwdriver adjustment adjusts stability by controlling the amount of feedback that is applied to the Sensing and Gating Circuitry. Normally it is factory set near the extreme clockwise (CW) position. This setting normally assures good stability, but tends to slow the response time of the generator. If rotated counterclockwise (CCW), the system response time becomes faster. However, if rotated too far CCW, the generator voltage may oscillate (hunt). It should then be rotated CW well above the point where oscillating occurred. The system voltage stability is most critical at no-load. If a setting is desired that provides the fastest possible voltage response with good generator stability, an oscilloscope or some load transient voltage recording device should be used.

Basler Electric Highland, Illinois
Katolight Service - Master Repair Manual - Page 1393

3.4 SENSING TRANSFORMER RECONNECTION

An internal sensing transformer has provisions for sensing the following voltages:

60 Hz; 120-139,208-240,416-480 and 520-600 ±10%
50 Hz; 100-110,220-230-240,380-400-415 and 500 ±10%

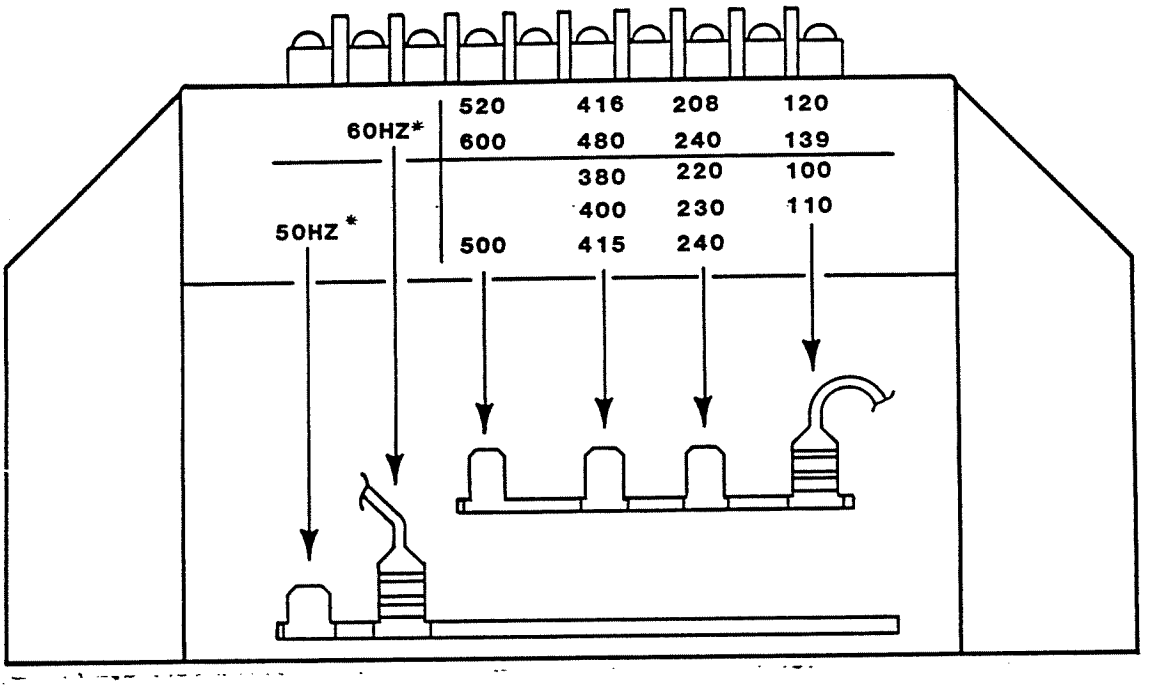

* These terminals apply only to the KR-FF series.

Figure 3-1 Sensing Transformer Connections

The transformer is normally factory connected to the 120 volt tap, and must be reconnected to another tap before operation if other than 120 volt sensing is employed. Reconnection is facilitated through the use of solderless connectors. Figure 3-1 shows the sensing transformer location and the voltage tap identification.

3.5 50/60 HZ CONNECTION (KR-FF ONLY)

The regulator is supplied connected for 60 Hz underfrequency roll-off. If operation is at 50 Hz, move the quick disconnect lead from the 60 Hz position to the 50 Hz position (See Figure 3-1).

Basler Electric
Katolight Service - Master Repair Manual - Page 1394

SECTION 4.0

INSTALLATION

4.1 INTERCONNECTION (See Figure 4-1)

CAUTION

Meggers and high potential test equipment must not be used. Incorrect use of such equipment will destroy the semiconductors in the regulator.

4.1.1 General

The regulator connects with the generator system as shown in the overall interconnection diagram, Figure 4-1. Number 14 gauge wire or larger should be used for connections to the voltage regulator.

4.1.2 Input Power (Terminals 3 and 4)

The voltage regulator operates on a power input voltage applied to terminals 3 and 4 (see Table 1-1 for input voltages). If the correct voltage is not available at the generator, or if the field flashing circuit is grounded, a power isolation transformer must be used.

CAUTION

Without the use of this transformer, a ground in the field circuit and a grounded generator output will destroy the thyristor power stage.

The transformer is not furnished with the regulator but can be ordered separately from Basler Electric Company.

CAUTION

Pertains only to ungrounded generator system. (Refer to Figure 4-2.)

The KR voltage regulators contain filter capacitors that are internally connected between terminal 3 and the chassis and between terminal 4 and the chassis. Each capacitor is rated at 370 Vac. When using these regulators with generators whose output is above 370 Vac be careful that the voltage between terminal 3 and ground and the voltage between terminal 4 and ground does not exceed 370 Vac. The voltage across the regulator's filter capacitors can exceed 370 Vac on an ungrounded generating system when the line-to-line voltage exceeds 370 Vac.

Basler Electric
Highland, Illinois
Katolight Service - Master Repair Manual - Page 1395

NOTES

1. POWER MATCHING TRANSFORMER IS REQUIRED IF APPROPRIATE INPUT VOLTAGE IS NOT AVAILABLE AT GENERATOR TERMINALS. IF FIELD OR FLASHING CIRCUIT IS GROUNDED AN ISOLATION TRANSFORMER IS ALSO REQUIRED. (SEE SECTION 4.0)
2. INTERNAL SENSING TRANSFORMER IS PROVIDED WITH TAPS FOR THE FOLLOWING VOLTAGES: 60 HZ; 120-139, 208-240, 416-480, 520-600: 50 HZ; 100-110, 220-230-240, 380-400-414, 500. IT IS SHIPPED CONNECTED TO THE 120 VOLT TAP. IF VOLTAGE OTHER THAN 120V IS REQUIRED CONNECT WIRE TO APPLICABLE TAP. (SEE PARAGRAPH 3.4)
3. THE EXCITER FIELD DC RESISTANCE MUST BE AT LEAST *OHMS. IF NOT, A SERIES RESISTOR MUST BE ADDED SO THAT THE TOTAL RESISTANCE IS AT LEAST THIS VALUE. (SEE PARAGRAPH 4.1.3).
4. SHUTDOWN SWITCH ALLOWS REMOVAL OF FIELD EXCITATION. IF SWITCH IS NOT USED, TEMPORARY SWITCH SHOULD BE INSTALLED DURING INITIAL OPERATION.
5. THE REGULATOR CONTAINS AN INTERNAL RELAY FOR VOLTAGE BUILD-UP. ALTHOUGH FLASHING IS SELDOM REQUIRED IF IT IS REFER TO PARAGRAPH 5.2. IF PERMANENT FIELD FLASHING IS DESIRED CONNECT AS SHOWN (ALWAYS LIMIT THE FLASHING CURRENT TO LESS THAN 50% OF THE NO LOAD FIELD CURRENT). DIODE MUST HAVE MINIMUM RATING OF 15A 800 VOLT PIV.
6. THE REGULATOR AND GENERATOR CHASSIS MUST BE GROUNDED. THIS IS PERTINENT FOR EMI SUPPRESSION. IF UNGROUNDED, THE KRFF REGULATOR WILL BE ELECTRICALLY HOT. (SEE PARAGRAPH 4.1.2).

* KR2F & KR2FF - 4.25 OHMS
KR4F & KR4FF - 25 OHMS
KR7F & KR7FF - 36 OHMS

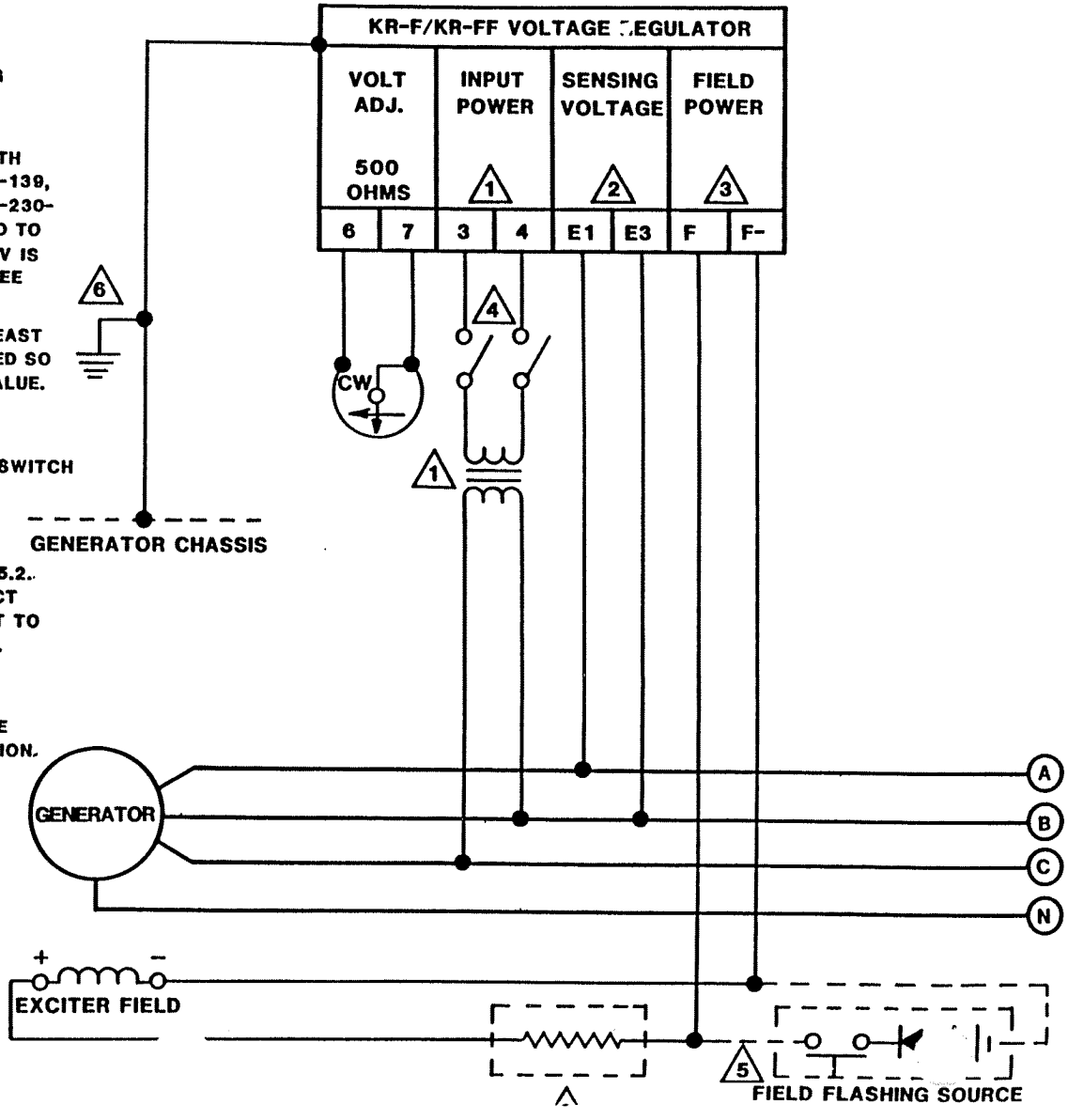

Figure 4-1. Interconnection Diagram (Typical).

Basler Electric
Highland, Illinois
Katolight Service - Master Repair Manual - Page 1396

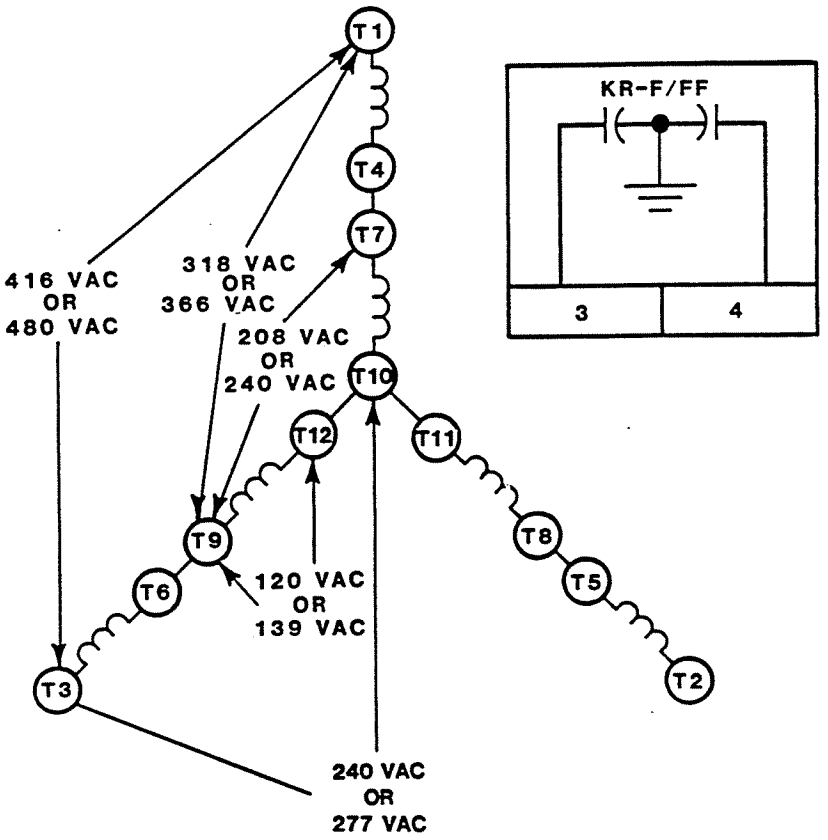

Figure 4-2. Ungrounded Neutral Generator System (Typical).

For example; on a 480 Vac generating system with an ungrounded neutral lead and regulator chassis, if the KR7F/FF regulator input power (terminals 3 and 4) is obtained line to neutral (277 Vac), and then a ground occurs on one of the other two generator lines, 480 Vac will be applied across one of the voltage regulator filter capacitors.

On this same generating system with the same conditions just described, but with the KR7F/FF voltage regulator connected from phase to phase (T7 and T9) at the generator's Wye connection tie point (240 Vac - KR7F/FF only) the voltage across the regulator's filter capacitors would have been reduced to 366 Vac.

NOTE: On this same generating system using a KR2F/FF or KR4F/FF voltage regulator connected T9 to T12 (120-139) Vac, one filter capacitor would also be subjected to 366 Vac.

If the line-to-line voltage of the generating system is reduced to 416 Vac, the voltage across the regulator's filter capacitors is reduced to 318 Vac.

Basler Electric
Katolight Service - Master Repair Manual - Page 1397

The power input leads are EMI filtered. In most applications, securing the regulator with a good metal-to-metal bond insures reducing interference to acceptable limits. As in all interference reduction situations, it is necessary to maintain a good connection between the filter ground and the system ground. A good electrical power ground is not necessarily a good interference ground. Ground leads should be as short as possible, preferably of copper strap whose width is 1/5 the length. For applications involving radio reception, additional improvement can be noticed by connecting the system to earth ground. This is because radio reception takes place between an antenna and earth ground. Grounding the system to earth ground simply makes all grounds common.

WARNING

To eliminate electrical shock hazard, it is necessary that the regulator chassis (filter ground) be connected to the system power ground because of filter capacitors connected between the line and regulator case.

4.1.3 Output Power (Terminals F+ and F-)

The dc resistance of the exciter field winding must be at least * ohms. If the field resistance is less than this value, a series resistor is required. This additional resistance is required to limit regulator field current forcing because excessive current may damage regulator semiconductors. This resistance must not be of such a value to restrict the excitation at full load.

*KR2F and KR2FF 4.25 Ohms Min.
KR4F and KR4FF 25.00 Ohms Min.
KR7F and KR7FF 36.00 Ohms Min.

Because the regulator output leads are not connected to any part of the system except the generator field, they are not filtered. Since EMI is present on these leads, it may be necessary to observe precautions with regard to the lead installation. Optimum results will be obtained in the field leads are kept as short as possible and shielded. Effective shielding can be achieved by routing both leads through standard 1/2 inch conduit. Not more than one or two feet of field leads should be unshielded. If the regulator is installed on the generator frame, it is possible to achieve satisfactory results with short unshielded leads.

4.1.4 External Voltage Adjust Rheostat (Terminals 6 and 7)

The voltage adjust rheostat is furnished with the unit for remote mounting and wiring.

Basler Electric
Katolight Service - Master Repair Manual - Page 1398

4.2 MOUNTING

This unit is convection cooled and should not be mounted near heat generating equipment or inside totally enclosed switchgear where the temperature rise could exceed its operating limit. Vertical mounting is recommended to obtain optimum convection cooling. (See Figure 4-3.)

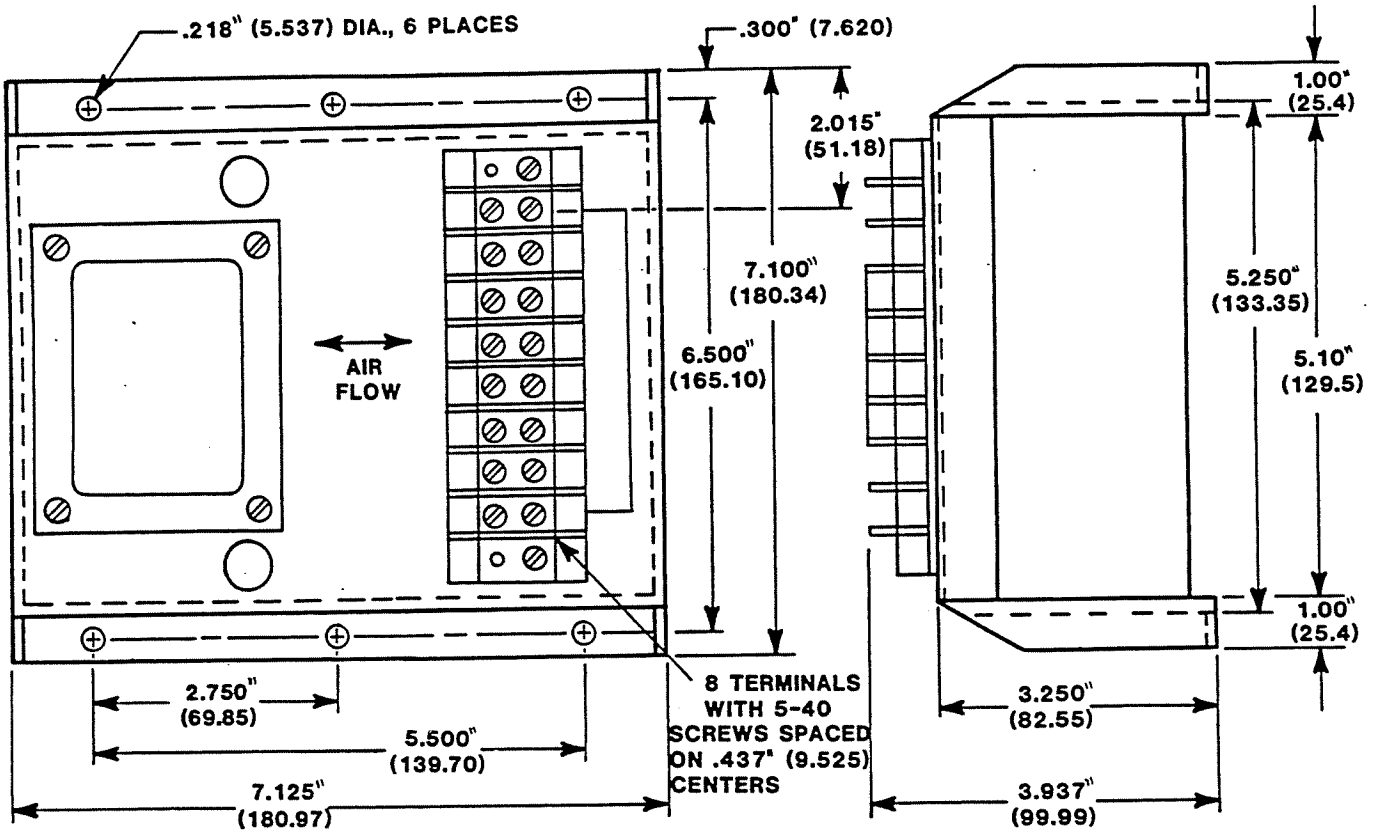

Figure 4-3. Outline Drawing.

4.3 ACCESSORY ITEMS

4.3.1 Voltage Shutdown

The system can be equipped with a switch to allow removal of excitation in an emergency or when the generator prime mover must be operated at reduced speed. This switch must always be placed in the input power line to the regulator (terminals 3 or 4).

Basler Electric
Highland, Illinois
Katolight Service - Master Repair Manual - Page 1399

CAUTION

The voltage regulator dc output (terminals F+ and F-) must never be opened during operation. To do so will produce inductive arcing that can possibly destroy the exciter and/or the voltage regulator. Therefore, never place the voltage shutdown switch in the exciter field circuit.

4.3.2 Parallel Operation

An APM 300 paralleling module is available for use with the voltage regulator to provide parallel operation of two or more generators.

4.3.3 Manual Voltage Control

A manual voltage control module is available for use with the voltage regulator to provide manual voltage control, independent of the voltage regulator.

4.3.4 Excitation Support System

In brushless exciter applications, no source of power is available for field forcing during short circuit and large motor starting conditions. The addition of an Excitation Support System (prevents collapse of excitation by providing constant voltage to the regulator for all load conditions and short circuit.

Basler Electric
Katolight Service - Master Repair Manual - Page 1400

SECTION 5.0

OPERATION

5.1 GENERAL

This section contains operation and adjustment procedures. Before operating, make certain that the regulator is connected into the system as shown on the Interconnection Diagram (Figure 4-1). Even momentary operation with an incorrect connection can damage this control equipment.

5.2 FIELD FLASHING

CAUTION

Do not attempt to flash the machine while it is rotating

The regulator contains an internal relay for automatic voltage buildup. Usually there is sufficient residual voltage to allow the generator voltage to buildup without flashing. However, if field flashing is required, apply a 12 or 24 Vdc flashing source, (with the prime mover at rest) across terminals F+ and F- on the regulator. The positive of the flashing source must be connected to F+ and the negative to F-. This action remagnetizes the field poles and allows buildup when the system is restarted. Be careful to observe polarities. If these leads are reversed, the flashing secure will be short circuited, resulting in potentially dangerous arcing or heating.

5.2 OPERATION AT REDUCED SPEEDS (KR-F ONLY)

CAUTION

When using the KR-F regulator, do not operate the generating system at reduced speed for an extended period of time. Prolonged operation at speeds lower than normal can seriously damage the voltage regulator and/or exciter field. If prime mover operation at reduced speed is essential, input power should be removed (terminals 3 and 4) from the exciter.

Katolight Service - Master Repair Manual - Page 1401

SECTION 6.0

MAINTENANCE AND TROUBLESHOOTING

6.1 PREVENTIVE MAINTENANCE

This unit should be inspected periodically to insure that the air flow is not restricted.

6.2 TROUBLESHOOTING

To avoid trouble during initial operation, the importance of eliminating wiring errors cannot be over-emphasized. The voltage regulator cannot operate properly unless connected correctly, and may fail if operated while incorrectly connected. An effective test, used to determine if the regulator is basically operational, is described in Figure 6-1.

Some of the possible malfunctions that could occur during operation of the voltage regulator and the corrective action are listed in Table 6-1.

It is recommended that the regulator be returned to Basler Electric Company for repair if the problem cannot be resolved using Table 6-1.

NOTES: (1) If, when troubleshooting a generating system, a defective voltage regulator is found, do not install a replacement regulator without first measuring the dc resistance of the exciter field winding to insure that the resistance is above the minimum specified in Table 1-1 for that regulator model.

(2) On generating systems not using a power isolation transformer, or using a power isolation transformer with a grounded secondary, insure that the exciter field winding or circuitry is not grounded before installing a new voltage regulator.

Basler Electric
Katolight Service - Master Repair Manual - Page 1403

PROCEDURE:

1. MOVE WIRE ON REGULAR SENSING TRANSFORMER TO 120 VOLT TAP.
2. CONNECT AS SHOWN. LIGHT BULB SHOULD BE 120 VOLT (ANY WATTAGE BELOW 200 WATT IS SATISFACTORY).
3. ADJUST EXTERNAL VOLTAGE ADJUST RHEOSTAT FOR MAXIMUM RESISTANCE.
4. PLUG IN REGULATOR TO 120 VOLT 60 CYCLE SOURCE. (LIGHT WILL FLASH ON MOMENTARILY WHEN PLUGGED IN).
5. SLOWLY ADJUST EXTERNAL VOLTAGE ADJUST RHEOSTAT TOWARD MINIMUM RESISTANCE. BEFORE REACHING MINIMUM RESISTANCE LIGHT BULB SHOULD COME ON TO NEAR FULL BRILLANCE. (BRILLANCE WILL BE LESS WHEN TESTING KR2F AND KR2FF.)
6. AT THE REGULATING POINT, A SMALL CHANGE IN THE EXTERNAL VOLTAGE ADJUST RHEOSTAT SHOULD TURN THE LIGHT BULB ON OR OFF.
7. THIS TEST MAY NOT REVEAL A VOLTAGE STABILITY PROBLEM.
8. BEFORE INSTALLING BACK IN SYSTEM, CONNECT REGULATOR SENSING TRANSFORMER TO ORIGINAL TAP.

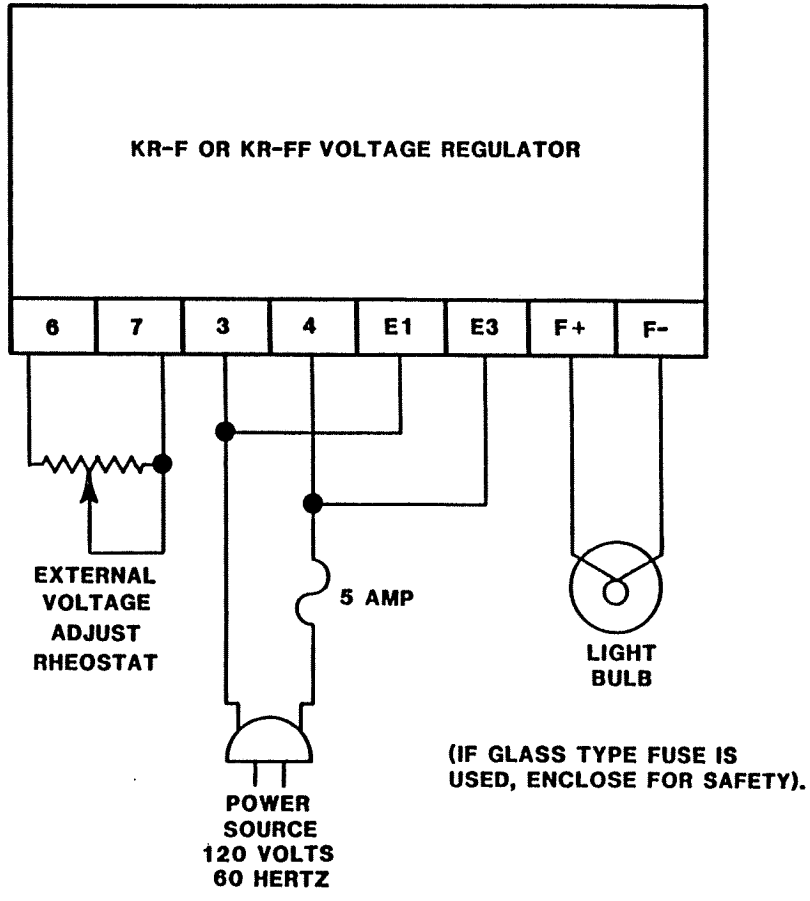

Figure 6-1. Operational Test.

Table 6-1 Troubleshooting Chart

SYMPTOM	PROBABLE CAUSE	SOLUTION
Voltage does not buildup to rated value.	Shutdown switch open.	Close switch.
	No input power to terminals 3 and 4.	Verify wiring.
	No connections to F+ and F-.	Verify wiring.
	Low residual voltage (or reverse residual).	Flash Field (see paragraph 5.2).
	Sensing terminals not connected to correct tap.	Verify correct tap (see par. 3.4)
	Prime mover not up to speed.	Bring up to speed.
	Generator output shorted or heavily loaded.	Remove short or load.
	Open in External Voltage Adjust Rheostat or associated circuitry.	Repair open connections or replace rheostat.
	External Voltage Adjust maladjusted. --	Adjust to rated value.
	Faulty voltage regulator.	Replace regulator.
	Defective generator or exciter.	Verify operation of exciter and/or generator.
Voltage high, uncontrollable with the voltage adjust rheostat.	No sensing voltage (terminals E1 and E3).	Verify connections.
	Sensing transformer set to wrong tap.	Verify sensing tap (see paragraph 3.4).
Voltage builds up until relay actuates then decays.	Open in External Voltage Adjust Rheostat or associated circuitry.	Repair open connections or replace rheostat.
	Defective voltage regulator.	Replace regulator.
Poor voltage stability (hunting)	Frequency unstable.	Consult governor manual.
	Stability adjust (R15) out of adjustment.	Adjust CW for increased stability.
	No load field voltage below rated.	See paragraph 4.1.3
	Faulty voltage regulator.	Replace regulator.
	Faulty exciter or generator.	Verify exciter and/or generator operation.
Poor regulation	Unit-Parallel switch in Parallel position. (When Parallel Assembly is used).	Place in Unit position (short parallel CT secondary).
	Regulator sensing and voltage metering not at same location.	Place voltmeter at same point as regulator sensing.
	Waveform distortion in generator voltage. (Regulator senses average voltage; meter; may be indicating RMS value).	Consult generator manufacturer.
	Field requirements exceeds capability of reg.	Verify field requirements.
	Prime mover is not up to rated speed.	Increase speed to rated.
	Input to terminals 3 and 4 low.	Voltage must be that indicated in Table 1-1.
	Faulty voltage regulator.	Replace regulator.
	Faulty exciter or generator.	Verify exciter and/or generator operation.

Basler Electric
Katolight Service - Master Repair Manual - Page 1405

SECTION 7.0
SPARE PARTS

7.1 GENERAL

The spare parts list, Table 7-1, identifies basic parts and assemblies of the voltage regulator with maintenance significance. When ordering parts, specify the complete part number of the voltage regulator, a description of the component part and its part number.

Table 7-1. Spare Parts List

DESCRIPTION	REFERENCE DESIGNATION	BASLER PART NUMBER
EMI Filter	FL1	BE 10281 005
Sensing Transformer	T1	BE 15724 001 (KR-F) BE 15724 002 (KR-FM) BE 15723 001 (KR-FF) BE 15723 002 (KR-FFM)
Resistor, Variable WW, 500 ohm, 25W	External Voltage Adjust Rheostat	06874
Circuit Board Assembly	----------	9 1160 01 120 (KR2F) 9 1160 01 114 (KR2FM) 9 1160 01 117 (KR2FF) 9 1160 01 111 (KR2FFM)
Diode (1N3671AR)	CR14	02677
SCR (16RC40A)	CR17	07476
Circuit Board Assembly	----------	9 1160 01 122 (KR7F) 9 1160 01 116 (KR7FM) 9 1160 01 119 (KR7FF) 9 1160 01 113 (KR7FFM)
SCR (2N4101)	CR15, CR16	09390
Diode (1N3671AR)	CR10, CR11, CR14, CR18, CR19	02677
Circuit Board Assembly	----------	9 1160 01 121 (KR4F) 9 1160 01 115 (KR4FM) 9 1160 01 118 (KR4FF) 9 1160 01 112 (KR4FFM)
SCR (2N4101)	CR15, CR16	09390
Diode (1N3671AR)	CR14, CR18, CR19	02677

Basler Electric
Katolight Service - Master Repair Manual - Page 1407

INSTRUCTIONS
FOR
VOLTAGE REGULATOR
KR4FFX/FFMX and KR7FFX/FFMX
9 1610 00 101/9 1606 00 101 and 9 1611 00 101/9 1607 00 101

Basler Electric
Phone 618 654-2341
Route 143 Box 269
Highland IL 62249 USA

Power Systems Group
Fax 618 654-2351
http://www.basler.com
info@basler.com

INTRODUCTION

The Basler KR Series Voltage Regulators precisely control the output voltage of an ac electric generating system by controlling the amount of current supplied to the exciter (or generator) field. The KR Series Voltage Regulators contain built-in Electromagnetic Interference (EMI) filtering and an underfrequency roll-off characteristic.

ELECTRICAL SPECIFICATIONS

Input Power Requirements

KR4FFX/FFMX: 120 to 139 Vac (nom.), 1ϕ, 60 Hz, 300 VA. 100 to 127 Vac (nom.), 1ϕ, 50 Hz, 300 VA.

KR7FFX/FFMX: 208 to 277 Vac (nom.), 1ϕ, 60 Hz, 840 VA. 220 to 240 Vac (nom.), 1ϕ, 50 Hz, 840 VA.

Input Sensing Requirements

50 Hz, 1ϕ: 100-110/220-230-240/380-400-415/500 Vac, ±10%, 60 Hz, 1ϕ; 120-139/208-240/416-480/520-600 Vac, ±10%.

Input Sensing Burden

10 VA per phase

Power Output

KR4FFX/FFMX: 2.5 A @ 63 Vdc maximum continuous. 3.5 A @ 90 Vdc 1 minute forcing (120 Vac input).

KR7FFX/FFMX: 3.5 A @ 125 Vdc maximum continuous. 5.0 A @ 180 Vdc 1 minute forcing (240 Vac input).

Field Resistance

KR4FFX/FFMX: 25 ohms minimum, 400 ohms maximum.

KR7FFX/FFMX: 36 ohms minimum, 400 ohms maximum.

Regulation Accuracy

±1% from no-load to full-rated load and 5% frequency variation.

Thermal Stability

±1% voltage variation for a 40°C (104°F) change within the operating range.

Power Dissipated

<20 watts at maximum continuous rating.

Underfrequency Operational Threshold

54 Hz nominal in 60 Hz systems (see Figure 1).
44 Hz nominal in 50 Hz systems (see Figure 2).

Regulator Response

<17 milliseconds in 60 Hz systems.
<20 milliseconds in 50 Hz systems.

Frequency Compensation

Variable. Frequency roll-off is preset at the factory for 48.5 Hz (50 Hz systems) and 58.5 Hz (60 Hz systems). Either V/Hz or 2 V/Hz can be selected. Refer to Figures 1 and 2.

Electromagnetic Interference (EMI) Filtering

Refer to Figure 3.

PHYSICAL SPECIFICATIONS

Operating Temperature: -40° C (-40° F) to +60° C (+140°F).

Storage Temperature: -65° C (-85° F) to +85° C (+185° F).

Weight 6.0 lbs. (2.7 kg) net. 7.0 lbs. (3.2 kg) shipping.

Vibration: Withstands the following:5 to 26 Hz at 1.2 g. 27 to 52 Hz at 0.036 inch double amplitude. 53 to 260 Hz at 5.0 g.

Shock: Withstands 20 g in each of three mutually perpendicular planes.

Mounting The unit is designed to operate when mounted directly on a diesel or turbine driven generator system. The unit can also be mounted in switchgear or control panels.

Accessories

The KR Series Voltage Regulator is designed to be compatible with any of the following listed accessories and equipment.

1. VAR/Power Factor Controller (SCP 250)
2. Series Boost Option
3. Current Transformers (CT2 through CT50)
4. Minimum/Maximum Excitation Limiter (EL 200)
5. Auto-Synchronizer (BE3-25A)
6. Auto-Synchronizer (BE1-25A)
7. Line Drop Compensator (LDC 300)

CONTROLS

External Voltage Adjust

This 175 ohm, 25 watt rheostat is supplied as a loose item for remote panel mounting. It provides an adjustment of ±10% of the nominal voltage of the regulated generator voltage. When connected as shown in Figure 4, adjustment of the rheostat to maximum resistance (CCW) will obtain minimum generator voltage output. Maximum generator voltage output is obtained by turning the rheostat clockwise (CW) to the minimum resistance position.

Voltage Range Adjustment

This screwdriver adjustment is factory set to establish the nominal ranges of sensing voltages associated with 60 Hz operation. If 60 Hz sensing is used, this control will not normally need adjustment.

When nominal 50 Hz sensing voltages are required, this control is used to establish the desired nominal sensing voltage. This is done in the following manner.

(1) Set the External Voltage Adjust Rheostat to the middle of its adjustment range.

(2) Ensure that the appropriate sensing voltage connection is made (refer to Figure 4) and that the 50 Hz connection is made.

(3) With the regulator properly connected into the system (Figure 4), bring the generator up to rated frequency (50 Hz).

(4) While watching the generator voltmeter, adjust the Internal Voltage Range Adjustment until the nominal generator voltage is obtained. (Voltage increases with CW rotation.)

After the internal Voltage Range Adjustment has been properly set, the External Voltage Adjust Rheostat will provide a voltage adjustment of ±10% of nominal (both 50 and 60 Hz systems).

Stability Adjustment

This screwdriver adjustment adjusts the system stability by controlling the amount of feedback that is applied to the Sensing and Gating Circuitry. Normally, it is factory preset near the extreme clockwise (CW) position. This setting normally assures good stability, but tends to slow the response time of the generator. If rotated counterclockwise (CCW), the system response time becomes faster. However, if rotated too far CCW, the generator voltage may oscillate (hunt). It should then be rotated CW well above the point where oscillating occurred. The system voltage stability is most critical at no-load. If a setting is desired that provides the fastest possible voltage response with good generator stability, an oscilloscope or some load transient voltage recording device should be used.

Sensing Transformer Reconnection

An internal sensing transformer has provisions for the following voltages:

60 Hz: 120-139/208-240/416-480 and 520-600; ±10%
50 Hz: 100-110/220-230-240/380-400-415 and 500; ±10%

The transformer is normally factory connected to the 120 Vac tap and must be reconnected to another tap before operation if a voltage other than the 120 Vac sensing is used. Reconnection is facilitated through the use of solderless connectors. Figure 4 shows the sensing transformer location and the voltage tap identification.

INSTALLATION

General

The Regulator must be connected to the generator system as instructed in this section and as shown in the basic interconnection diagram (Figure 5).

Input Power (Terminals 3 and 4)

The voltage regulator operates on a power input voltage applied to terminals 3 and 4. If the correct voltage is not available at the generator, or if the field flashing circuit is grounded, a power isolation transformer must be used. The transformer is not furnished with

Publication:	Rev		First Printing	04/90	Copyright
9 1606 00 991	F	Basler Electric	Revised	06/2000	1997-2000

the regulator but can be ordered separately from the Basler Electric Company.

The KR Voltage Regulators contain filter capacitors that are internally connected between terminal 3 and the chassis and between terminal 4 and the chassis. Each capacitor is rated at 370 Vac. When using these regulators with generators whose output is above 370 Vac, ensure that the voltage between terminal 3 and ground and terminal 4 and ground does not exceed 370 Vac. The voltage across the regulator's filter capacitors can exceed 370 Vac on an ungrounded generating system when the line-to-line voltage exceeds 370 Vac.

Example (Figure 6): On a 480 Vac generating system with an ungrounded neutral lead and regulator chassis, if the KR7FFX regulator input power (terminals 3 and 4) is obtained line-to-neutral (277 Vac), and then a ground occurs on one of the other two generator lines, 480 Vac will be applied across one of the voltage regulator filter capacitors.

On this same system with the same conditions, but with the regulator connected phase-to-phase (T7 and T9) at the generator's Wye connection tie point (240 Vac) the voltage across the regulator's filter capacitors would have been reduced to 366 Vac.

If the line-to-line voltage of the generating system is reduced to 416 Vac, the voltage across the regulator's filter capacitors is reduced to 318 Vac.

The power input leads are EMI filtered. In most applications, securing the regulator with a good metal-to-metal bond ensures a reduction in interference to acceptable limits. As in all interference reduction situations, it is necessary to maintain a good electrical connection between the filter ground and the system ground. A good electrical power ground is **not** necessarily a good interference ground. Ground leads should be as short as possible, preferably of a copper braid whose width is 1/5 of the length. For applications involving radio reception, additional improvement can be noticed by connecting the system to earth ground. This is because radio reception takes place between an antenna and earth ground. Grounding the system to earth ground simply makes all grounds common.

WARNING!

To eliminate any electrical shock hazard, it is imperative that the regulator chassis (filter ground) be connected to the system power ground. This is because the filter capacitors are connected between the line and the regulator case.

Output Power (Terminals F+ and F-)

The dc resistance of the exciter field winding must be at least the minimum value specified in the *Electrical Specifications*. If the field resistance is less than this value, a series resistor is required to increase the field resistance. This additional resistance is required to limit the regulator field current forcing because excessive current may damage the regulator semiconductors. This resistance must not be of such a value as to restrict the excitation at full load.

Because the regulator output leads are not connected to any part of the system except the generator field, they are not filtered. Since EMI is present on these leads, it may be necessary to observe precautions with regard to the lead installation. Optimum results will be obtained when the field leads are kept as short as possible and shielded. Effective shielding can be achieved by routing both leads through a standard 0.5 inch diameter conduit. Not more than one or two feet of the field leads should be unshielded. If the regulator is installed on the generator frame, it is possible to achieve satisfactory results with short, unshielded leads.

External Voltage Adjust Rheostat

The voltage adjust rheostat (Terminals 6 and 7) is furnished with the voltage regulator for remote mounting and wiring. It should be 175 ohms and 2 watts minimum.

MOUNTING

The Voltage Regulator may be mounted in any position. However, it should be vertically mounted to obtain optimum cooling. The Regulator can be mounted in any location where the ambient temperature does not exceed the operational limits. Due to its rugged construction, the Regulator can be mounted directly on the generator. Mounting hardware should be selected based upon the vibration and shock expected to be encountered during shipping/transport and normal operation. Refer to Figure 7 for the outline drawing of the unit which provides overall and mounting dimensions.

ACCESSORY ITEMS

Voltage Shutdown Switch

The system can be equipped with a switch to allow the removal of the excitation in case of an emergency or when the generator prime mover must be operated at reduced speed. This switch **must always** be placed in the input power line that is connected to the regulator at terminals 3 and 4.

CAUTION!

The voltage regulator dc output (terminals F+ and F-) must never be opened during operation. To do so will produce inductive arcing that can possibly destroy the exciter and/or the voltage regulator. Therefore, **never** place the voltage shutdown switch in the exciter field circuit.

Parallel Operation

An APM 300 Paralleling Module is available for use with the voltage regulator and will provide for the parallel operation of two or more generators.

Manual Voltage Control

A Manual Voltage Control is available for use with the voltage regulator to provide a manual backup that is independent of the voltage regulator.

Excitation Support System

In brushless exciter applications, no source of power is available for field forcing during short circuit and large motor starting conditions. The addition of an Excitation Support System will prevent the collapse of excitation by providing constant voltage to the regulator for all load conditions and short circuits.

OPERATION

This section contains operation procedures. Before operating, ensure that the regulator is connected into the system as shown on the interconnection diagram (Figure 5). Even momentary operation with an incorrect connection can damage the regulator or other control equipment.

Field Flashing

CAUTION!

Do not attempt to flash the machine when it is rotating.

When the Voltage Regulator is operated with the generator for the first time, the polarity of residual magnetism may not be correct or of sufficient magnitude. If the generator does not build up after start-up, check for 6 volts or more residual at the regulator terminals TB1-3 and TB1-4. If the voltage is below 6 volts, shut down the prime mover and proceed as follows:

1. With the prime mover at rest, connect a limiting resistor of 25 to 30 ohms in series with the field (terminals F+ and F-).
2. Observe polarity and apply a dc source (non-grounded) of not more than 12 Vdc, to the series circuit of the field and resistor.
3. Allow approximately 3 seconds before removing the dc source.
4. With the voltage regulator power input disconnected (terminals 3 and 4), start the prime mover and measure the voltage at the generator terminals. If the generator output is less than 6 volts, repeat steps 1 through 3. If the voltage is greater than 6 volts, voltage build-up should occur. Stop the prime mover and reconnect the regulator input power.

Preliminary Operation

Verify that all wiring is properly and securely connected (Refer to Figure 5).

System Checkout

Perform the following steps to ensure the proper operation of the regulator initial operation.

Step 1. Start the prime mover and bring up to rated speed. If a voltage shutdown switch is used, close the switch to apply excitation. When this switch is not used, generator voltage will build-up automatically.

Step 2. Verify the generator output voltage. Note that any of the following conditions may occur:

(a) *Overvoltage*. If this condition occurs, open the shutdown switch and stop the prime mover. determine the cause of the overvoltage. If necessary refer to the troubleshooting chart.

(b) *No Voltage Build-up*. If this condition occurs, field flashing may be required.

(c) *Undervoltage*. If this condition occurs, adjust the External Voltage Adjust Rheostat. If not corrected, refer to the troubleshooting chart.

(d) *Voltage Builds Up and Then Collapses*. If this condition occurs, stop the prime mover and determine the cause by referring to the troubleshooting chart.

(e) *Oscillating Voltage*. If this condition occurs, rotate the Stability Adjustment Potentiometer (R15) to correct. If the voltage continues to oscillate and the Stability Adjustment (R15) has no effect, refer to the troubleshooting chart.

Step 3. Adjust the External Voltage Adjust Rheostat for nominal generator output voltage.

Step 4. Apply a load to the generator.

Step 5. Verify that voltage regulation is within ±1%. If it is not, refer to the troubleshooting chart.

Step 6. Alternately remove and apply the load several times to determine if the generator voltage is stable.

MAINTENANCE AND TROUBLESHOOTING

Preventive Maintenance

The only preventive maintenance required on the KR Series Voltage Regulators is to periodically check that the connections between the Regulator and system are clean and tight and that the air flow is not obstructed by accumulations of dirt and dust.

Corrective Maintenance

The KR Series Voltage Regulators are designed for ease of repair by the replacement of major parts, such as the transformers, heatsinks, or the printed circuit board.

Warranty and Repair Service

The Basler KR Series Voltage Regulators are warranted against defective material and workmanship for 18 months from the date of shipment from our factory. Units submitted for warranty repair should be returned to the factory in Highland, Illinois, freight prepaid, with a complete description of the installation and the reported problem. Pre-arrangement with either the nearest Basler Sales Office or with the factory will assure the fastest possible turn around time.

Functional Testing

To functional test the KR Voltage Regulator, refer to Figure 8 and proceed as follows:

Step 1. Move the wire on the regulator sensing transformer to the 120 V tap.

Step 2. Connect regulator as shown in Figure 8. The light bulb should be 120 Vac with a wattage reading below 200 W.

Step 3. Adjust the External Voltage Adjust Rheostat for maximum resistance (fully counter-clockwise).

Step 4. Connect the regulator to a 120 Vac, 60 Hz. source. Note that the light bulb will flash momentarily when the voltage is applied.

Step 5. Slowly adjust the External Voltage Adjust Rheostat toward minimum resistance (CW). Before reaching full CW rotation, the light bulb should come on to near full brilliance. If the light bulb(s) do not illuminate, the regulator is defective.

Step 6. At the regulating point, a small change in the External Voltage Adjust Rheostat should turn the light bulb on or off.

Step 7. This test may not reveal a stability problem.

Step 8. Before installing the regulator back into the system, connect the regulator sensing transformer back to the original tap selected.

Troubleshooting Chart

Common generator system malfunctions and the appropriate repair procedures are listed in the following paragraphs.

Voltage Does Not Build up to Rated Value

Step 1. Check for low residual voltage (less than 6 volts). If low residual voltage exists, flash the field in accordance with *Field Flashing*. If residual voltage is normal, proceed to Step 2.

Step 2. Check that Shutdown Switch is closed and that fuses are intact. If Shutdown Switch is closed and fuses are intact, proceed to Step 3.

Step 3. Check that prime mover is up to speed. If prime mover is operating at rated speed, proceed to Step 4.

Step 4. Verify that generator output is not shorted or heavily loaded. If output is not shorted, proceed to Step 5.

Step 5. Verify that wiring and external Voltage Adjust Rheostat is not defective. If wiring is defective, repair or replace wiring. If rheostat is defective, replace rheostat. If wiring and rheostat are not defective, proceed to Step 6.

Step 6. Verify that all wiring is correctly connected at power input terminals 3 and 4 and that input power is of correct value. If power input is low or not present, repair wiring. If power input is present, proceed to Step 7.

Step 7. Verify that connections at terminals F+ and F- are correct. If connections are incorrect, repair wiring. If connections are correct, proceed to Step 8.

Step 8. Verify that correct sensing tap has been selected. If wrong sensing tap has been selected, reconnect to proper tap. If correct tap has been selected, proceed to Step 9.

Step 9. Verify generator/exciter operation. If generator/exciter operation is improper, contact generator/exciter manufacturer. If generator/exciter operation is proper, proceed to Step 10.

Step 10. If the above steps fail to correct the malfunction, replace the voltage regulator.

Voltage Builds up and Then Decays

Step 1. Check for open circuit from external Voltage Adjust Rheostat. If wiring is defective, repair wiring. If rheostat is defective, replace rheostat. If connections are proper and not defective and rheostat is not defective, proceed to Step 2.

Step 2. Replace the voltage regulator.

Voltage High and Uncontrollable with Voltage Adjust Rheostat

Step 1. Verify that sensing voltage is available at terminals E1 and E3 and that the proper taps are used. If sensing voltage is not available, correct wiring. If sensing voltage is proper, proceed to step 2.

Step 2. Replace the voltage regulator.

Voltage High and Controllable with Voltage Adjust Rheostat

Step 1. Verify that the sensing voltage is available at terminals E1 and E3 and that the proper taps are used. If the sensing voltage is not available, repair wiring. If the sensing voltage is proper, proceed to Step 2.

Step 2. Check for defective voltmeter. If voltmeter is defective, replace voltmeter. If voltmeter is not defective, proceed to Step 3.

Step 3. If the above steps fail to correct the malfunction, replace the regulator.

Poor Stability (Hunting).

Step 1. Verify that the frequency is stable. If the frequency is unstable, consult with the governor manufacturer. If the frequency is stable, proceed to Step 2.

Step 2. Check the adjustment of the Stability Adjustment (R15). If adjusting the Stability Adjustment does not correct the malfunction, proceed to Step 3.

Step 3. Verify that the no-load field voltage is not below rated. If the no-load field voltage is below rated, refer to *Installation, Output Power (Terminals F+ and F-)*, and change the field series resistance. If the no-load field voltage is at rated, proceed to Step 4.

Step 4. Verify generator/exciter operation. If generator/exciter operation is improper, contact generator/exciter manufacturer. If generator/exciter operation is proper, proceed to Step 5.

Step 5. If the above steps fail to correct the malfunction, replace the voltage regulator.

Poor Regulation.

Step 1. Verify that the field voltage/current requirements at full load are not in excess of the maximum regulator output capability. If regulator limits are being exceeded (per *Specifications)*, consult with the factory for a suitable model. If regulator limits are not exceeded, proceed to Step 2.

Step 2. Verify that the input power to terminals 3 and 4 is correct (see *Specifications*). If input power is incorrect, connect proper power input. If input power is correct, proceed to Step 3.

Step 3. Verify that the generator output voltmeter is connected at the same location as sensing inputs. If voltmeter location is different, reconnect. If voltmeter location is the same, proceed to Step 4.

Step 4. Check for waveform distortion due to harmonic content in generator output voltage. (Regulator senses average voltage, meter may be indicating RMS value.) If waveform distortion is present, use an average sensing (rectifier type) voltmeter to verify regulation accuracy. If waveform distortion is not present, proceed to Step 5.

Step 5. Verify that the Unit/Parallel switch is in Unit position except during parallel operation. If Unit/Parallel is in an incorrect position, place switch into proper position. If Unit/Parallel switch is in proper position, proceed to Step 6.

Step 6. Verify generator/exciter operation. If generator/exciter operation is improper, contact generator/exciter manufacturer. If generator/exciter operation is proper, proceed to step 7.

Step 7. If the above steps fail to correct the malfunction, replace the voltage regulator.

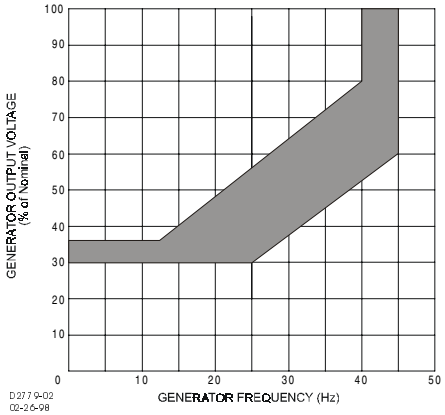

Figure 1. 50 Hz Frequency Compensation

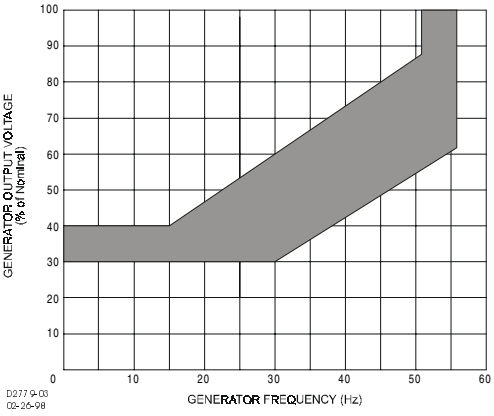

Figure 2. 60 Hz Frequency Compensation

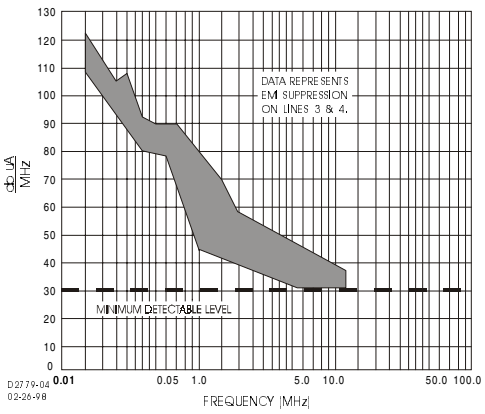

Figure 3. Typical Suppression of Conducted EMI

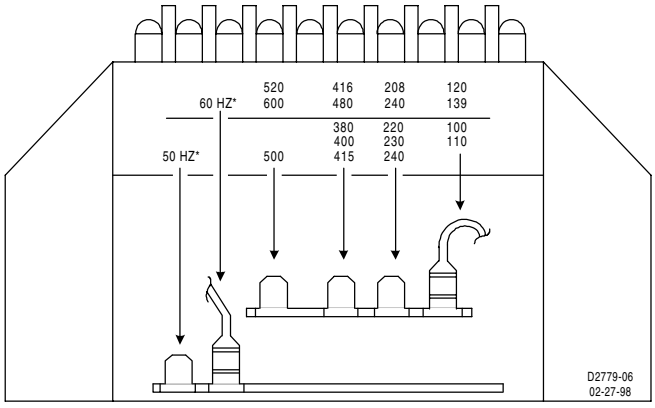

Figure 4. Sensing Transformer Connections

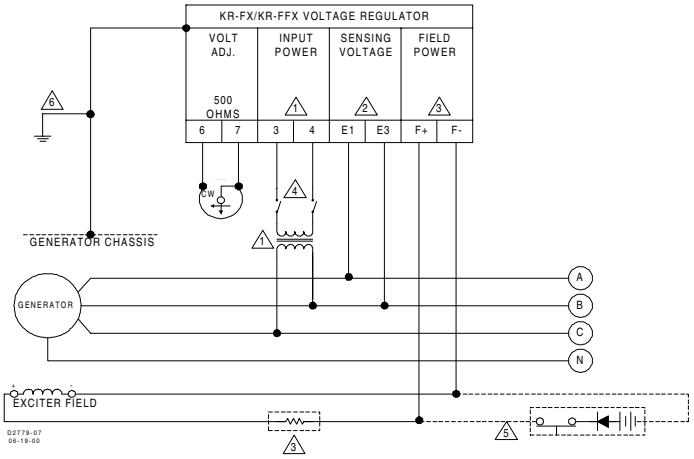

Figure 5. Interconnection Diagram (Typical)

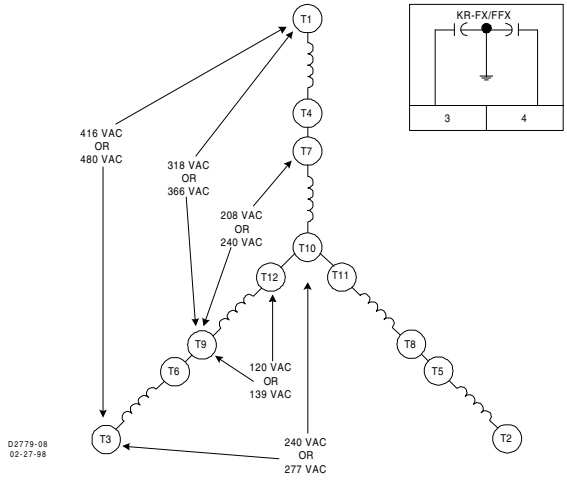

Figure 6. Ungrounded Neutral Generator System (Typical)

NOTES:

1. Power matching transformer is required if appropriate input voltage is not available at generator terminals. If field or flashing circuit is grounded, an isolation transformer is also required.
2. Internal sensing transformer is provided with taps. It is shipped connected to the 120 Volt tap. If voltage other than 120 V is required, connect wire to applicable tap.
3. The exciter field dc resistance must be at least that listed in the *Specifications*. If not, a series resistor must be added so that the total resistance is at least this value.
4. Shutdown switch allows removal of field excitation. If switch is not used, a temporary switch should be installed during initial operation.
5. The regulator contains an internal relay for voltage buildup. If flashing is required, refer to *Field Flashing*. If permanent field flashing is desired, connect as shown and limit flashing current to <50% of no-load field current. Diode rating: 15 A, 600 PIV.
6. Regulator and generator must be grounded. This is pertinent for EMI suppression. If ungrounded, the KR regulator will be electrically hot.

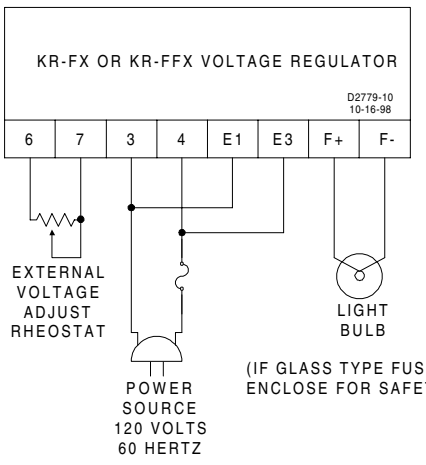

Figure 8. Functional Test Setup

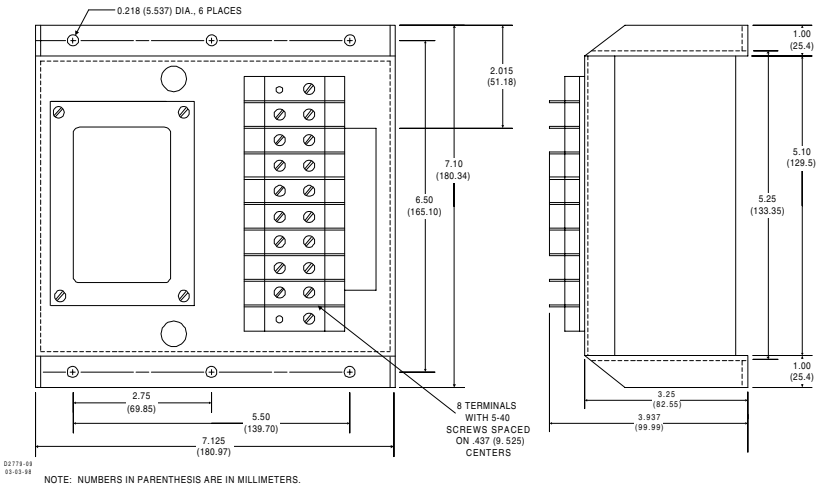

Figure 7. KR Regulator, Outline Drawing

INSTRUCTION MANUAL

FOR

VOLTAGE REGULATOR

Model: LS65-12B

Publication Number: 9 3372 00 990
Revision: E 02/2001

INTRODUCTION

This manual provides information concerning the operation and installation of the LS65-12B Voltage Regulator. To accomplish this, the following is provided.

- Specifications
- Mounting Information
- Operation
- Maintenance

WARNING

TO AVOID PERSONAL INJURY OR EQUIPMENT DAMAGE, ONLY QUALIFIED PERSONNEL SHOULD PERFORM THE PROCEDURES PRESENTED IN THIS MANUAL.

CAUTION

MEGGERS AND HIGH POTENTIAL TEST EQUIPMENT SHOULD BE USED WITH EXTREME CARE. INCORRECT USE OF SUCH EQUIPMENT COULD DAMAGE COMPONENTS CONTAINED IN THE DEVICE.

CONTENTS

SECTION 1 • GENERAL INFORMATION 1-1

GENERAL 1-1
SPECIFICATIONS 1-1

SECTION 2 • INSTALLATION 2-1

MOUNTING 2-1
CONNECTIONS 2-2
Terminal Descriptions 2-2

SECTION 3 • OPERATION 3-1

GENERAL 3-1
PRELIMINARY SET-UP 3-1
SYSTEM START-UP 3-1
ADJUSTMENTS 3-2
Field Flashing 3-2
Frequency Roll-Off Adjustment 3-2
Stability (STB) Adjustment 3-3
Voltage (VLT ADJ) Adjustment 3-3
Factory Voltage Adjust Range Calibration Adjustment 3-3
Parallel Droop (DRP) Compensation 3-3
OPTIONS 3-3
Remote Voltage Adjust 3-4
Excitation Disable 3-4
Current Boost Module 3-4
Var/PF Control 3-4
Manual Voltage Control 3-4
OPERATIONAL TEST 3-4

SECTION 4 • MAINTENANCE 4-1

PREVENTIVE MAINTENANCE 4-1
TROUBLESHOOTING 4-1

SECTION 5 • MANUAL CHANGE INFORMATION 5-1

CHANGES 5-1

SECTION 1 • GENERAL INFORMATION

GENERAL

The LS65-12B Voltage Regulator is contained in an encapsulated plastic case. The regulator controls the dc exciter field power of conventional, 50 or 60 hertz brushless generators.

Regulation is provided by sensing the generator output voltage, converting it to a dc signal and comparing the signal to a reference voltage signal. An error signal is developed and used to control the dc field power in order to maintain a constant generator output.

The regulator includes frequency compensation with selectable slope, inverse time overexcitation shutdown, solid-state build-up circuitry, single-phase or three-phase voltage sensing, single-phase or three-phase shunt, or permanent magnet power input, and parallel droop compensation, and an accessory input. The accessory input provides compatibility with accessories such as a var/power factor controller.

SPECIFICATIONS

Refer to Table 1-1 for the electrical specifications and to Table 1-2 for the physical specifications of the LS65-12B.

Table 1-1. Electrical Specifications

Output Power (with a 240 Vac Input):	12 Adc @ 65 Vdc maximum continuous. 25 Adc @ 125 Vdc forcing for 10 seconds.
AC Input Power:	180 to 264 Vac, single-phase or three-phase, 50/60 Hz, or 63 to 105 Vac; three-phase, 100 to 240 Hz, PMG, 3125 VA maximum 240 Vac; single-phase, 100 to 240 Hz, PMG, 3125 VA.
AC Sensing Voltage:	180 to 264 Vac, 50/60 Hz; single- or three-phase.
External Voltage Adjust Rheostat:	10 kohm, 2 W, potentiometer
Regulation Accuracy:	±1% of voltage setpoint
Voltage Drift:	±1% voltage variation for a 40°C (104°F) change.
Response Time:	< 4 milliseconds
Frequency Compensation:	1 or 2 V/Hz jumper selectable with knee adjustable from 45 Hz to 65 Hz.
EMI Suppression:	Internal filter
Voltage Build-Up:	Internal provisions for automatic voltage build-up from generator residual voltages as low as six Vac.
Overexcitation Shutdown:	Overexcitation protection starts timing at 90 Vdc ±5% and takes the output to zero in greater than 30 seconds. The output can be 125 Vdc for greater than 10 seconds.
Droop	1 A or 5 A, <10 VA, Adjustable from 0 to 10% at rated input current, 0.8 power factor
Power Dissipation:	50 W maximum.
UL Recognized/CSA Certified	UL Recognized per Standard 508, UL File NO. E97035. CSA Certified per Standard CAN/CSA-C22.2 No. 14-95, CSA File No. LR 23131

Katolight Service - Master Repair Manual - Page 1416

Table 1-2. Physical Specifications

CE Conformity	Conforms to: Radiated Emissions ..... EN50081-2 Radiated Immunity: Electric field ..... EN61000-4-3 (10 V/m Conducted ..... EN61000-4-6 (10 VRMS) Conducted Emissions ..... EN50081-2 (EN55011, Class A) ESD Immunity ..... EN50082-2 (4 KV contact, 8 KV air) EFT Immunity ..... EN50082-2 (2 KV coupling clamp) Magnetic Immunity ..... EN50082-2 (30ARMS, 50 Hz) Safety: EN61010-1
Operating and Storage Temperature:	-40°C (-40°F) to +70°C (+158°F).
Shock:	Withstands up to 20 g in each of three mutually perpendicular axes.
Vibration:	Withstands the following accelerations at the stated frequency: 0.5 g; 18 to 2000 Hz
Weight:	Approximately 1.1 kg (2.5 lbs.)

Katolight Service - Master Repair Manual - Page 1417

SECTION 2 • INSTALLATION

MOUNTING

The regulator may be mounted in any position. Refer to the outline drawing (Figure 2-1) for overall dimensions. The regulator may be mounted directly on the generator set using UNF 1/4-20 or equivalent hardware. Select the proper hardware to withstand any expected shipping/transportation and operating conditions.

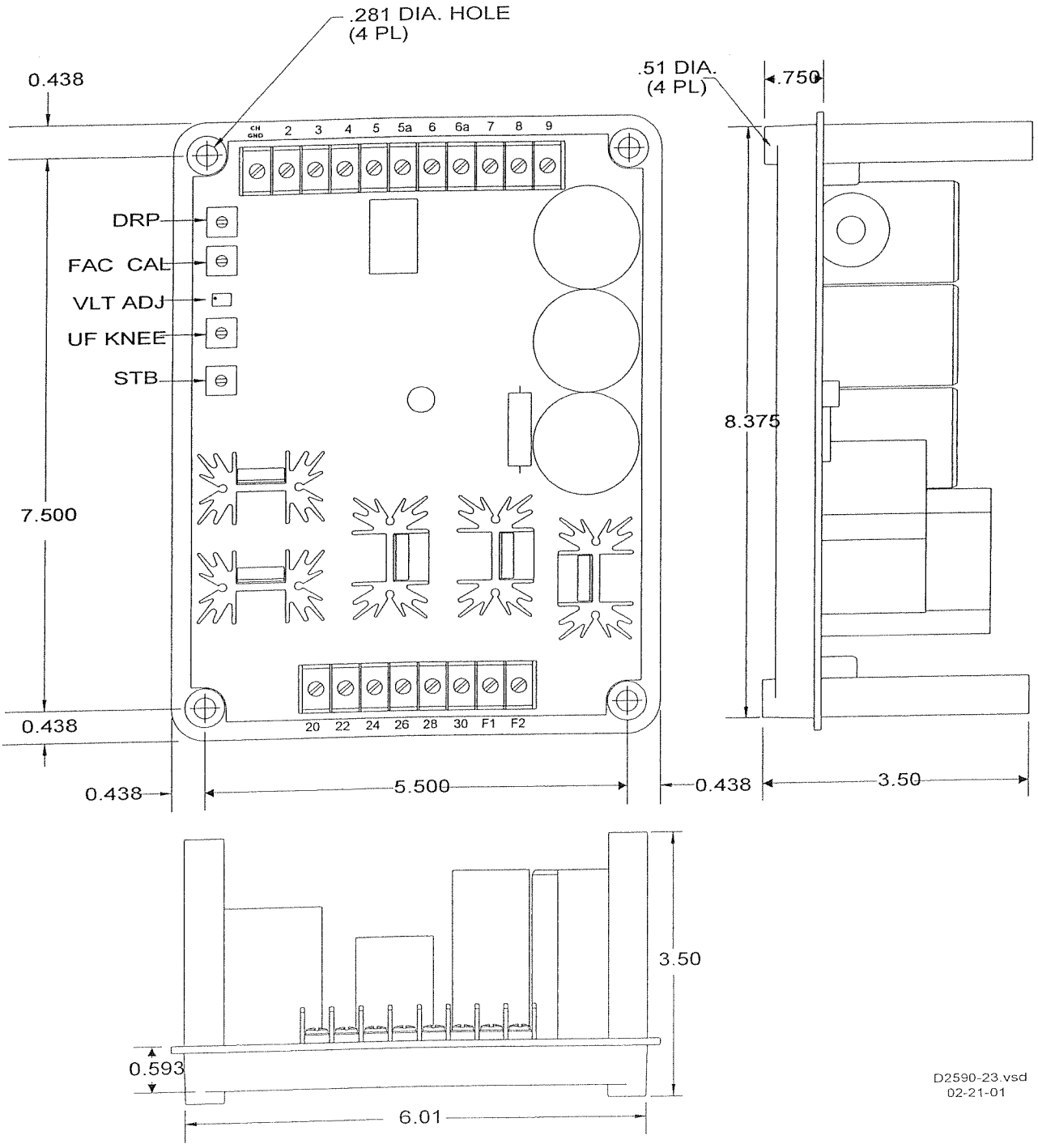

Figure 2-1. LS65-12B Outline Drawing

CONNECTIONS

Before connecting the LS65-12B into your system, review the terminal descriptions provided in Table 2-1, the internal adjustments provided in Table 2-2, and the typical interconnection diagrams shown in Figures 2-2 through 2-17. **When automatic voltage regulation is used with a permanent magnetic excited generator, ensure that the jumpers are removed between terminals 20 - 28, 22 - 30, and 24 – 26.**

Terminal Descriptions

Table 2-1. Terminal Descriptions

Terminal Number	Terminal Description
Upper Terminal Strip	
CH GND	Chassis ground connection
2	Auxiliary Input from var Power Factor Controller
3	Auxiliary Input from var Power Factor Controller
4	Connect to 7 to use internal voltage adjust, no connection for external voltage adjust
5	1 Amp Current Transformer
5a	5 Amp Current Transformer
6	Current Transformer Common
6a	Common connection for selectable features
7	Connect Remote Adjust from 7 to 6a, connect to 4 for internal voltage adjust
8	Connect to 6a to select 1v/Hz underfrequency slope
9	Connect to 6a to select 3 phase sensing
Lower Terminal Strip	
20	Phase C sensing input
22	Phase A sensing input
24	Phase B sensing input
26	3-phase power input
28	1-phase or 3-phase power input
30	1-phase or 3-phase power input
F1	Field +
F2	Field -

Table 2-2. Internal Adjustments

Adjustment	Adjustment Description
DRP	Voltage Droop Adjust
FAC CAL	FAC CAL is a factory voltage adjust range calibration. No customer adjustment is required.
VLT ADJ	Multi-turn Voltage Adjust
UF	Underfrequency Knee Adjust
STB	Stability Adjust

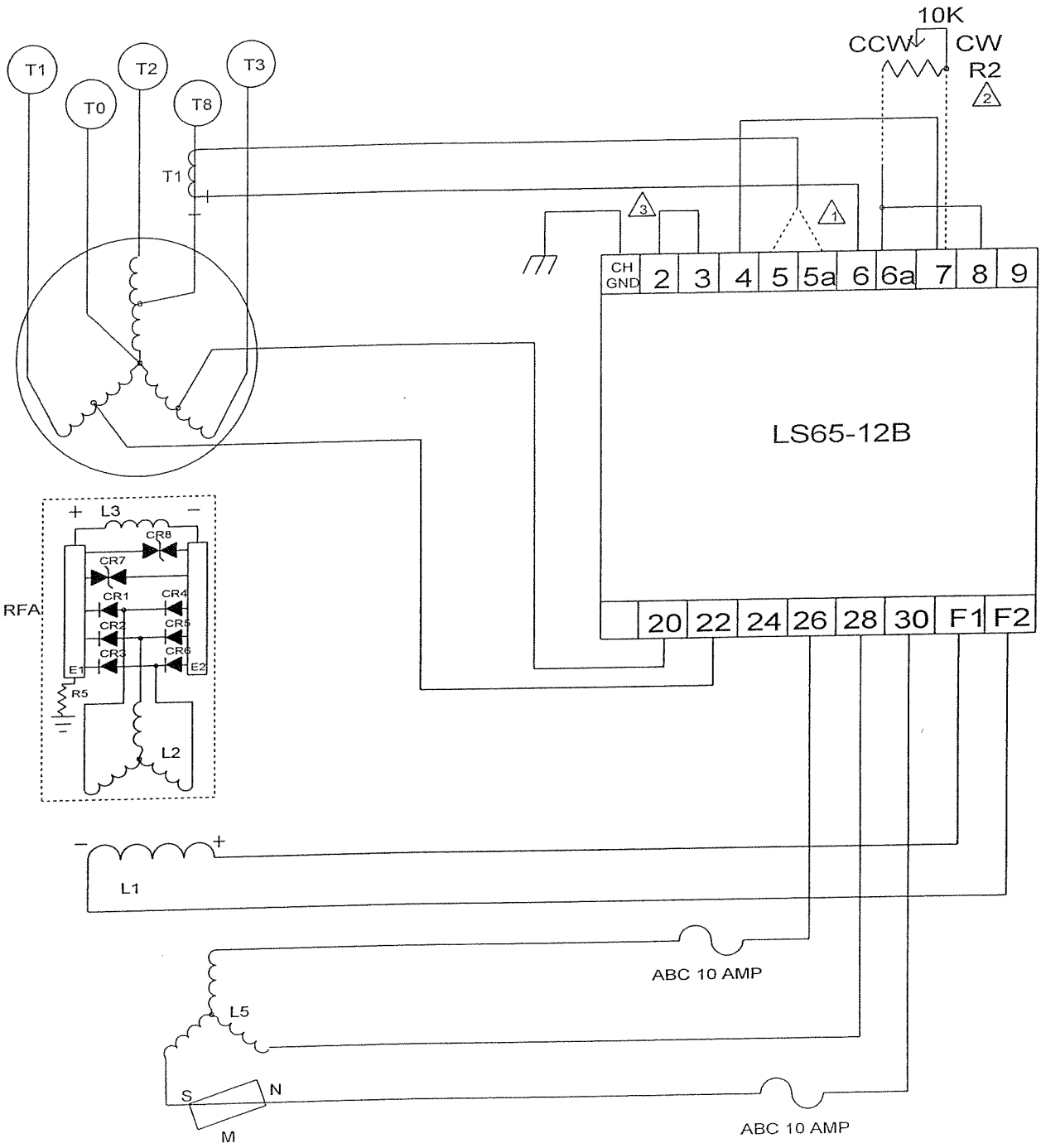

CR1-6 ROTATING RECTIFIERS
CR7,8 SURGE SUPPRESSION DIODES
E1 POSITIVE HEAT SINK
E2 NEGATIVE HEAT SINK
L1 EXCITER FIELD (STATOR)
L2 EXCITER ARMATURE (ROTOR)
L3 ROTATING FIELD (MAIN ROTOR)
L4 STATOR (MAIN STATOR)
L5 PM EXCITER STATOR
M ROTATING PERMANENT MAGNET
R2 REMOTE LEVEL RHEOSTAT
R5 SUPPRESSION RESISTOR
RFA REVOLVING FIELD ASSY
T1 VOLTAGE DROOP TRANSFORMER
(MAY NOT BE SUPPLIED)

1. CONNECT TO TERMINAL 5 FOR 1 AMP CT, CONNECT TO TERMINAL 5a FOR 5 AMP CT.

2. CONNECT REMOTE VOLTAGE ADJUST FROM 6a TO 7 AND REMOVE LINK 4-7 IF FITTED WITH A REMOTE ADJUST.

   CONNECT 6a TO 8 FOR 1V/Hz; REMOVE FOR 2V/Hz UNDERFREQUENCY SLOPE.

   CONNECT 6a TO 9 FOR 3-PHASE SENSING; OPEN FOR 1-PHASE SENSING.

3. CONNECT 2 AND 3 TO SCP250 VAR/PF CONTROLLER. SHORT WHEN NOT USED.

D2590-11.vsd
002-21-01

Figure 2-2. 10-12 Lead, PMG, Single-Phase Sensing

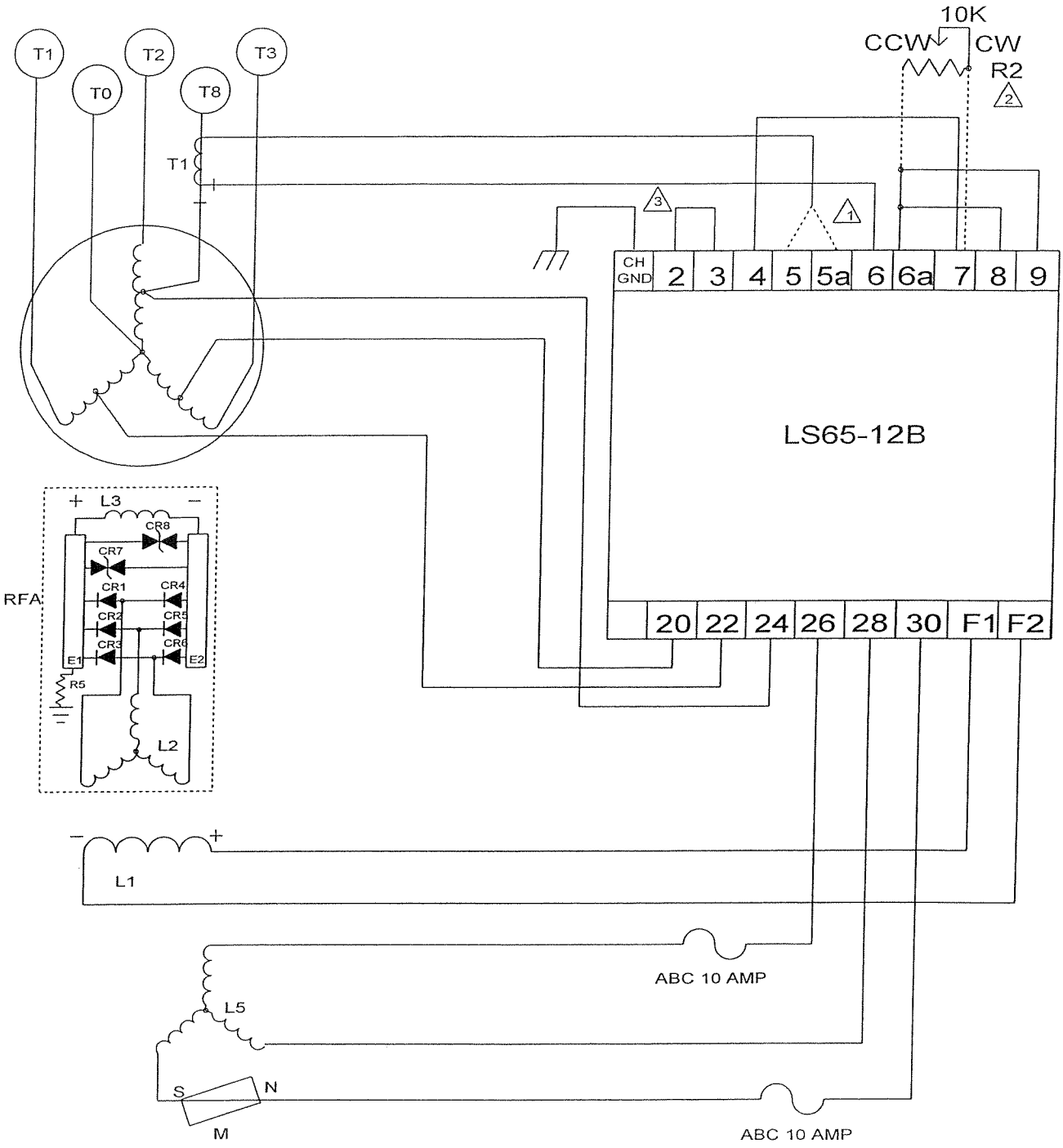

CR1-6 ROTATING RECTIFIERS
CR7,8 SURGE SUPPRESSION DIODES
E1 POSITIVE HEAT SINK
E2 NEGATIVE HEAT SINK
L1 EXCITER FIELD (STATOR)
L2 EXCITER ARMATURE (ROTOR)
L3 ROTATING FIELD (MAIN ROTOR)
L4 STATOR (MAIN STATOR)
L5 PM EXCITER STATOR
M ROTATING PERMANENT MAGNET
R2 REMOTE LEVEL RHEOSTAT
R5 SUPPRESSION RESISTOR
RFA REVOLVING FIELD ASSY
T1 VOLTAGE DROOP TRANSFORMER
(MAY NOT BE SUPPLIED)

△1 CONNECT TO TERMINAL 5 FOR 1 AMP CT, CONNECT TO TERMINAL 5a FOR 5 AMP CT.

△2 CONNECT REMOTE VOLTAGE ADJUST FROM 6a TO 7 AND REMOVE LINK 4-7 IF FITTED WITH A REMOTE ADJUST.

CONNECT 6a TO 8 FOR 1V/Hz; REMOVE FOR 2V/Hz UNDERFREQUENCY SLOPE.

CONNECT 6a TO 9 FOR 3-PHASE SENSING; OPEN FOR 1-PHASE SENSING.

△3 CONNECT 2 AND 3 TO SCP250 VAR/PF CONTROLLER. SHORT WHEN NOT USED.

D2590-12.vsd
02-21-01

Figure 2-3. 10-12 Lead, PMG, Three-Phase Sensing

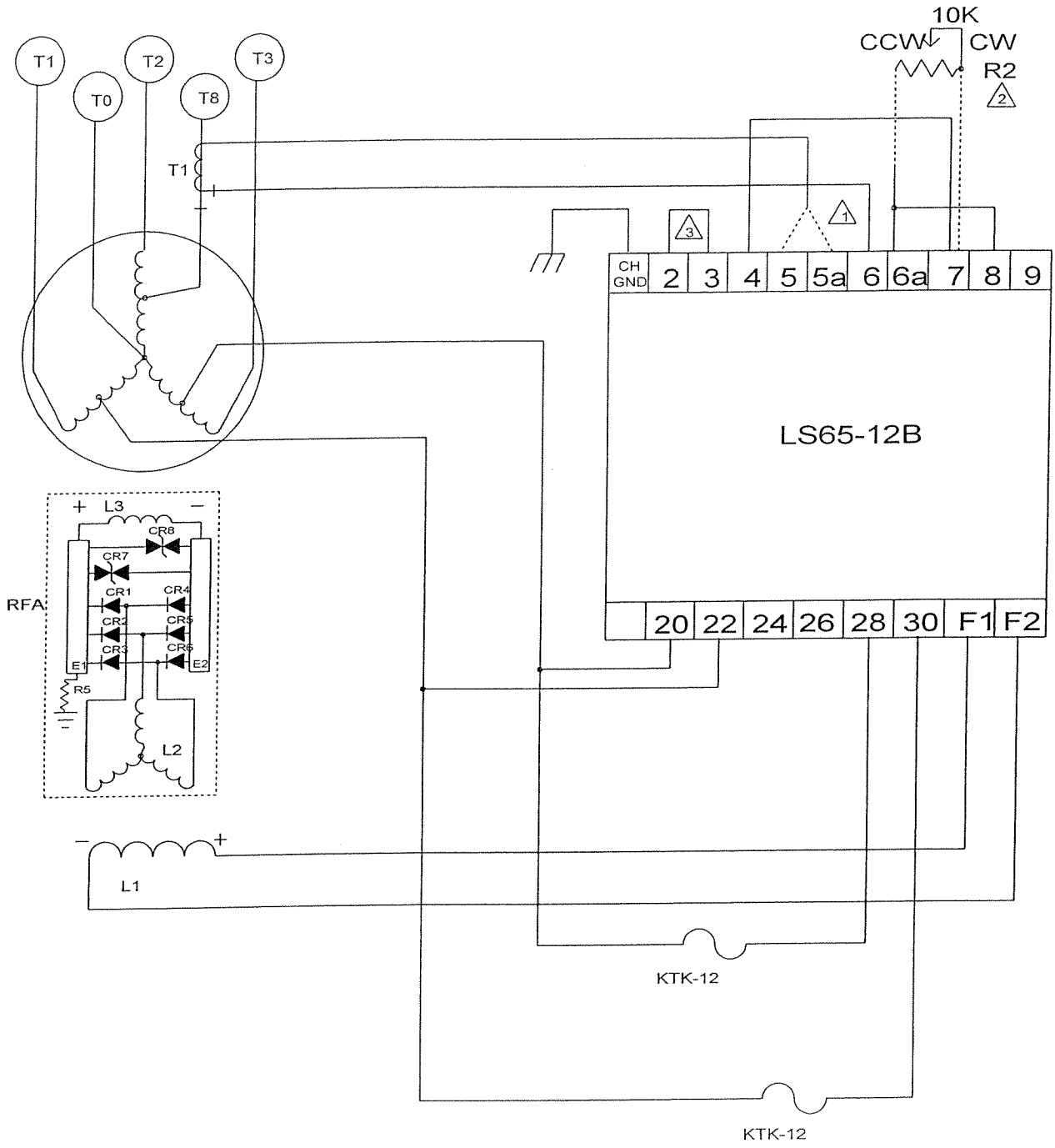

CR1-6 ROTATING RECTIFIERS
CR7,8 SURGE SUPPRESSION DIODES
E1 POSITIVE HEAT SINK
E2 NEGATIVE HEAT SINK
L1 EXCITER FIELD (STATOR)
L2 EXCITER ARMATURE (ROTOR)
L3 ROTATING FIELD (MAIN ROTOR)
L4 STATOR (MAIN STATOR)
L5 PM EXCITER STATOR
M ROTATING PERMANENT MAGNET
R2 REMOTE LEVEL RHEOSTAT
R5 SUPPRESSION RESISTOR
RFA REVOLVING FIELD ASSY
T1 VOLTAGE DROOP TRANSFORMER
(MAY NOT BE SUPPLIED)

1. CONNECT TO TERMINAL 5 FOR 1 AMP CT, CONNECT TO TERMINAL 5a FOR 5 AMP CT.

2. CONNECT REMOTE VOLTAGE ADJUST FROM 6a TO 7 AND REMOVE LINK 4-7 IF FITTED WITH A REMOTE ADJUST.

   CONNECT 6a TO 8 FOR 1V/Hz; REMOVE FOR 2V/Hz UNDERFREQUENCY SLOPE.

   CONNECT 6a TO 9 FOR 3-PHASE SENSING; OPEN FOR 1-PHASE SENSING.

3. CONNECT 2 AND 3 TO SCP250 VAR/PF CONTROLLER. SHORT WHEN NOT USED.

D2590-13.vsd
02-21-01

Figure 2-4. 10-12 Lead, Shunt Excited, Single-Phase Sensing

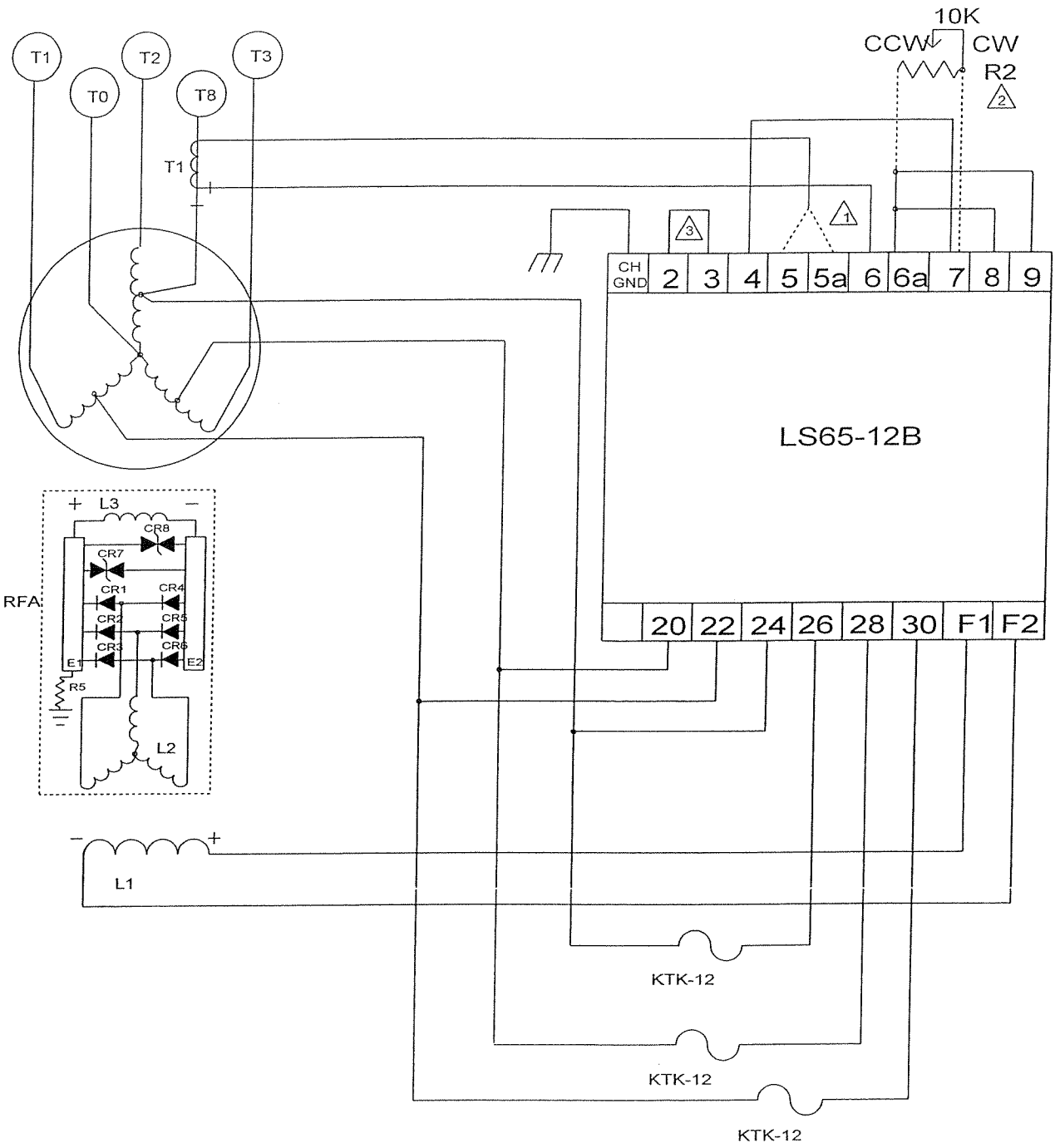

CR1-6 ROTATING RECTIFIERS
CR7,8 SURGE SUPPRESSION DIODES
E1 POSITIVE HEAT SINK
E2 NEGATIVE HEAT SINK
L1 EXCITER FIELD (STATOR)
L2 EXCITER ARMATURE (ROTOR)
L3 ROTATING FIELD (MAIN ROTOR)
L4 STATOR (MAIN STATOR)
L5 PM EXCITER STATOR
M ROTATING PERMANENT MAGNET
R2 REMOTE LEVEL RHEOSTAT
R5 SUPPRESSION RESISTOR
RFA REVOLVING FIELD ASSY
T1 VOLTAGE DROOP TRANSFORMER
(MAY NOT BE SUPPLIED)

1. CONNECT TO TERMINAL 5 FOR 1 AMP CT, CONNECT TO TERMINAL 5a FOR 5 AMP CT.

2. CONNECT REMOTE VOLTAGE ADJUST FROM 6a TO 7 AND REMOVE LINK 4-7 IF FITTED WITH A REMOTE ADJUST.

   CONNECT 6a TO 8 FOR 1V/Hz; REMOVE FOR 2V/Hz UNDERFREQUENCY SLOPE.

   CONNECT 6a TO 9 FOR 3-PHASE SENSING; OPEN FOR 1-PHASE SENSING.

3. CONNECT 2 AND 3 TO SCP250 VAR/PF CONTROLLER. SHORT WHEN NOT USED.

D2590-14.vsd
02-21-01

Figure 2-5. 10-12 Lead, Shunt Excited, Three-Phase Sensing

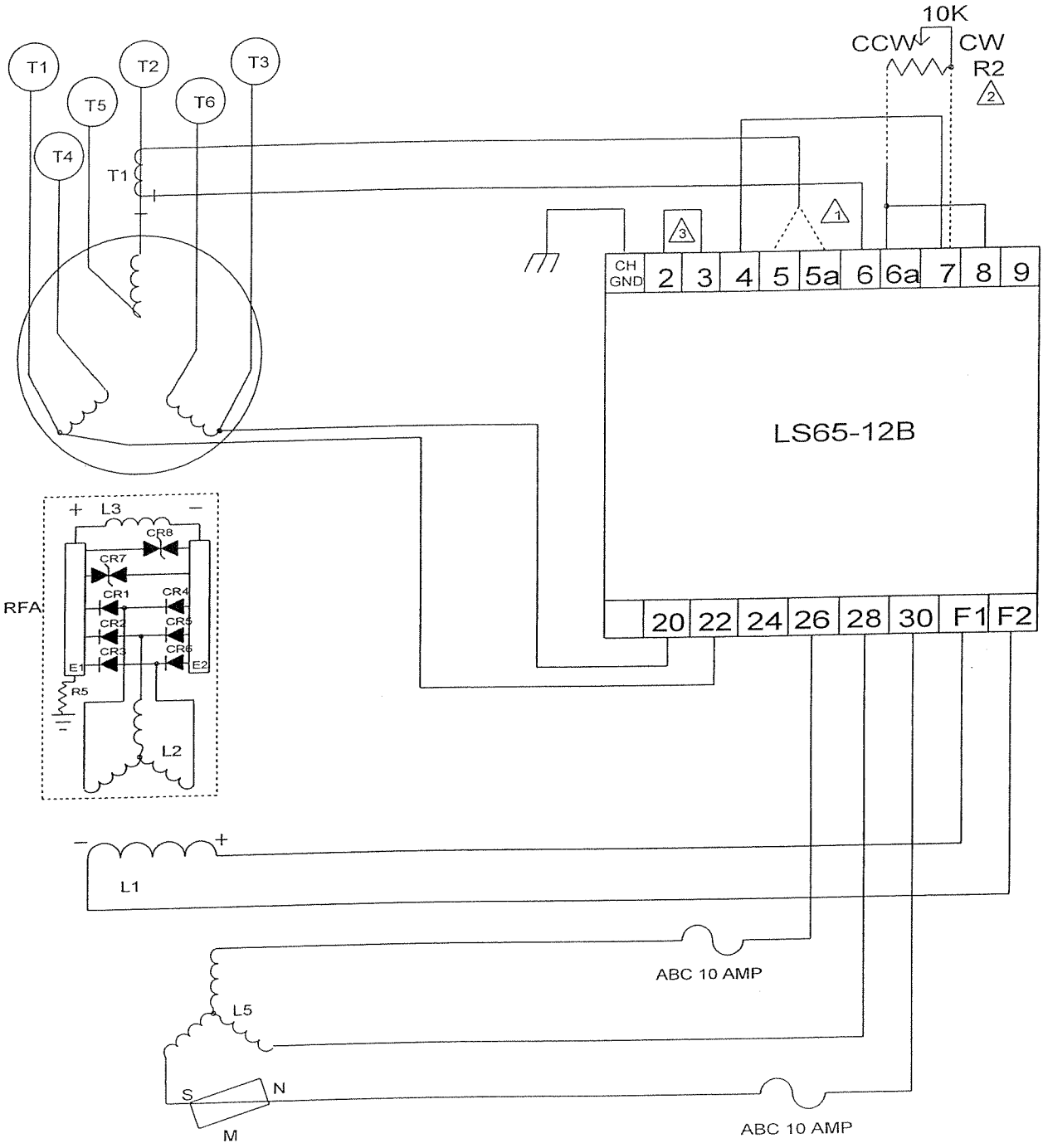

CR1-6 ROTATING RECTIFIERS
CR7,8 SURGE SUPPRESSION DIODES
E1 POSITIVE HEAT SINK
E2 NEGATIVE HEAT SINK
L1 EXCITER FIELD (STATOR)
L2 EXCITER ARMATURE (ROTOR)
L3 ROTATING FIELD (MAIN ROTOR)
L4 STATOR (MAIN STATOR)
L5 PM EXCITER STATOR
M ROTATING PERMANENT MAGNET
R2 REMOTE LEVEL RHEOSTAT
R5 SUPPRESSION RESISTOR
RFA REVOLVING FIELD ASSY
T1 VOLTAGE DROOP TRANSFORMER
(MAY NOT BE SUPPLIED)

1. CONNECT TO TERMINAL 5 FOR 1 AMP CT, CONNECT TO TERMINAL 5a FOR 5 AMP CT.

2. CONNECT REMOTE VOLTAGE ADJUST FROM 6a TO 7 AND REMOVE LINK 4-7 IF FITTED WITH A REMOTE ADJUST.

   CONNECT 6a TO 8 FOR 1V/Hz; REMOVE FOR 2V/Hz UNDERFREQUENCY SLOPE.

   CONNECT 6a TO 9 FOR 3-PHASE SENSING; OPEN FOR 1-PHASE SENSING.

3. CONNECT 2 AND 3 TO SCP250 VAR/PF CONTROLLER. SHORT WHEN NOT USED.

D2590-15.vsd
02-21-01

Figure 2-6. 4-6 Lead, PMG, Single-Phase Sensing

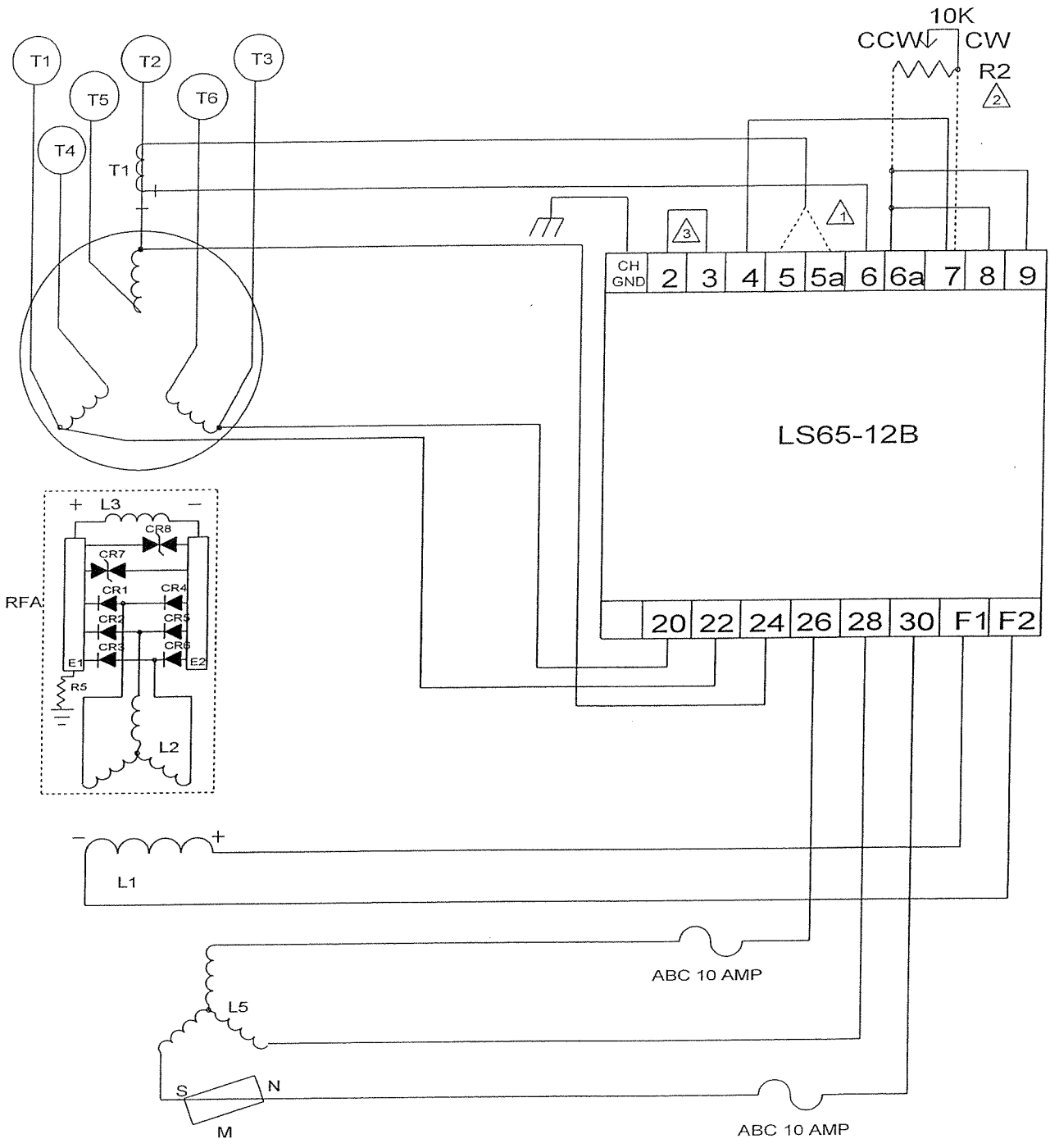

CR1-6 ROTATING RECTIFIERS
CR7,8 SURGE SUPPRESSION DIODES
E1 POSITIVE HEAT SINK
E2 NEGATIVE HEAT SINK
L1 EXCITER FIELD (STATOR)
L2 EXCITER ARMATURE (ROTOR)
L3 ROTATING FIELD (MAIN ROTOR)
L4 STATOR (MAIN STATOR)
L5 PM EXCITER STATOR
M ROTATING PERMANENT MAGNET
R2 REMOTE LEVEL RHEOSTAT
R5 SUPPRESSION RESISTOR
RFA REVOLVING FIELD ASSY
T1 VOLTAGE DROOP TRANSFORMER
(MAY NOT BE SUPPLIED)

1. CONNECT TO TERMINAL 5 FOR 1 AMP CT, CONNECT TO TERMINAL 5a FOR 5 AMP CT.

2. CONNECT REMOTE VOLTAGE ADJUST FROM 6a TO 7 AND REMOVE LINK 4-7 IF FITTED WITH A REMOTE ADJUST.

   CONNECT 6a TO 8 FOR 1V/Hz; REMOVE FOR 2V/Hz UNDERFREQUENCY SLOPE.

   CONNECT 6a TO 9 FOR 3-PHASE SENSING; OPEN FOR 1-PHASE SENSING.

3. CONNECT 2 AND 3 TO SCP250 VAR/PF CONTROLLER. SHORT WHEN NOT USED.

D2590-16.vsd
02-21-01

Figure 2-7. 4-6 Lead, PMG, Three-Phase Sensing

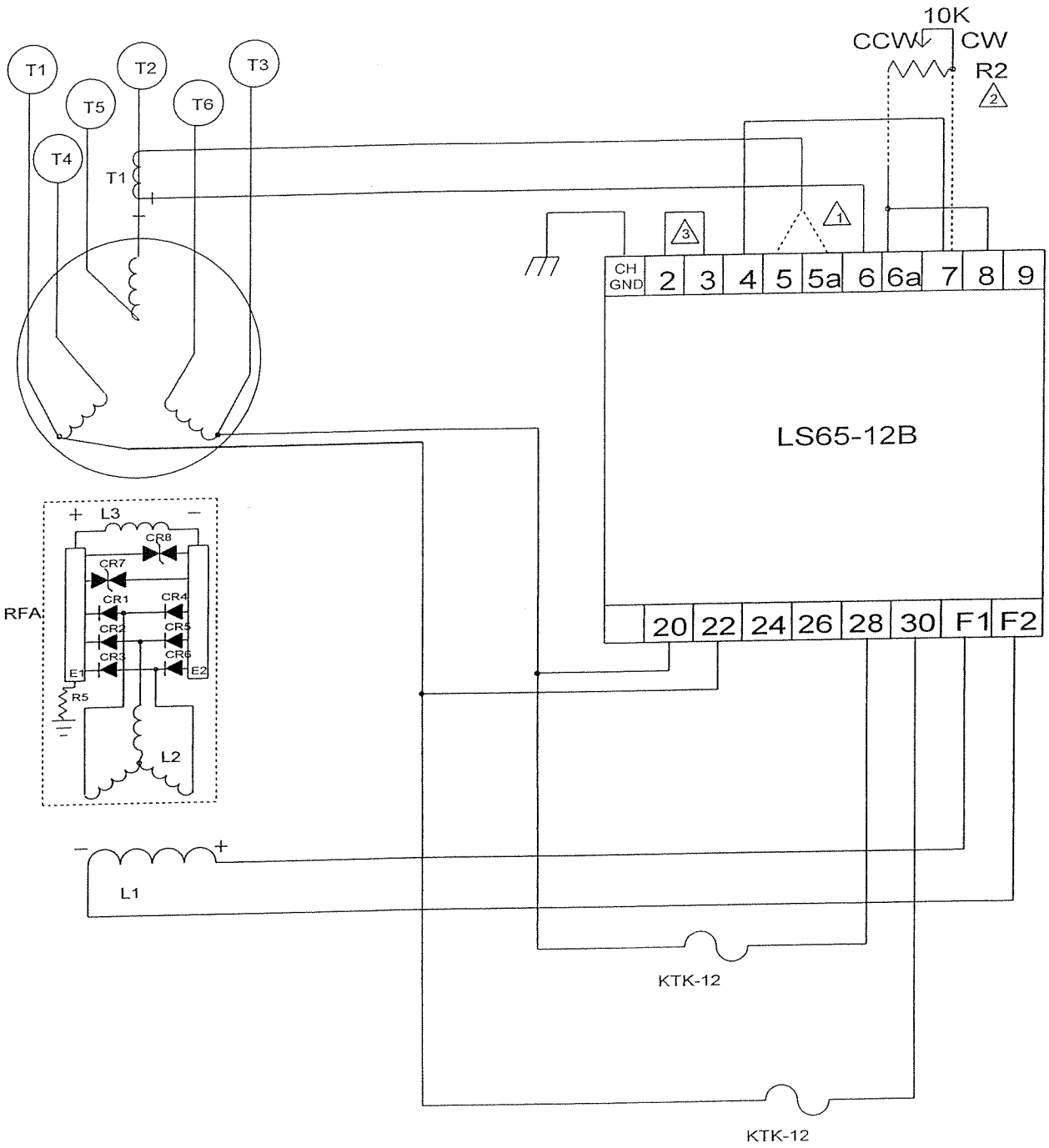

CR1-6 ROTATING RECTIFIERS
CR7,8 SURGE SUPPRESSION DIODES
E1 POSITIVE HEAT SINK
E2 NEGATIVE HEAT SINK
L1 EXCITER FIELD (STATOR)
L2 EXCITER ARMATURE (ROTOR)
L3 ROTATING FIELD (MAIN ROTOR)
L4 STATOR (MAIN STATOR)
L5 PM EXCITER STATOR
M ROTATING PERMANENT MAGNET
R2 REMOTE LEVEL RHEOSTAT
R5 SUPPRESSION RESISTOR
RFA REVOLVING FIELD ASSY
T1 VOLTAGE DROOP TRANSFORMER
(MAY NOT BE SUPPLIED)

△1 CONNECT TO TERMINAL 5 FOR 1 AMP CT, CONNECT TO TERMINAL 5a FOR 5 AMP CT.

△2 CONNECT REMOTE VOLTAGE ADJUST FROM 6a TO 7 AND REMOVE LINK 4-7 IF FITTED WITH A REMOTE ADJUST.

CONNECT 6a TO 8 FOR 1V/Hz; REMOVE FOR 2V/Hz UNDERFREQUENCY SLOPE.

CONNECT 6a TO 9 FOR 3-PHASE SENSING; OPEN FOR 1-PHASE SENSING.

△3 CONNECT 2 AND 3 TO SCP250 VAR/PF CONTROLLER. SHORT WHEN NOT USED.

D2590-17.vsd
02-21-01

Figure 2-8. 4-6 Lead, Shunt Excited, Single-Phase Sensing

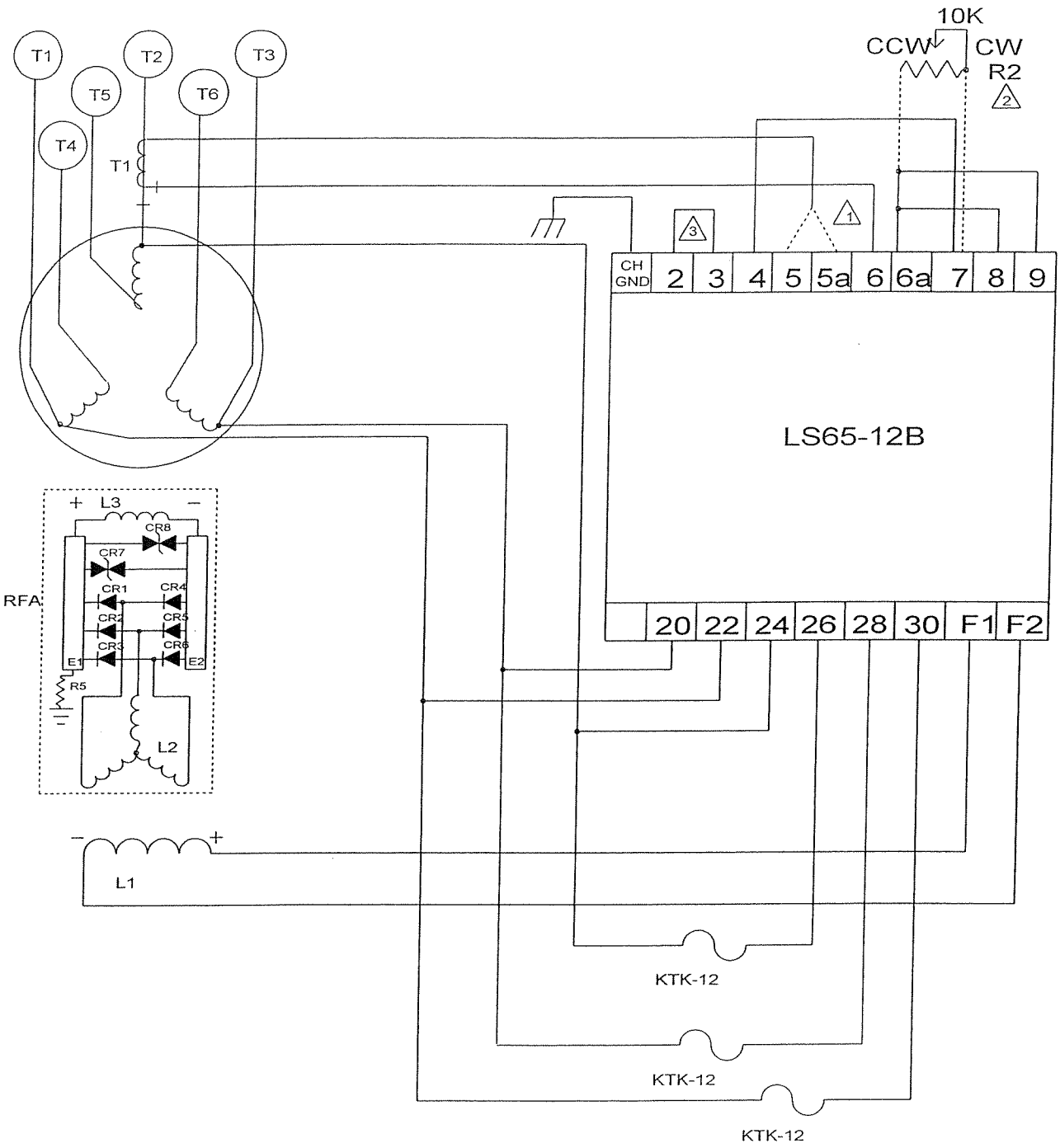

CR1-6 ROTATING RECTIFIERS
CR7,8 SURGE SUPPRESSION DIODES
E1 POSITIVE HEAT SINK
E2 NEGATIVE HEAT SINK
L1 EXCITER FIELD (STATOR)
L2 EXCITER ARMATURE (ROTOR)
L3 ROTATING FIELD (MAIN ROTOR)
L4 STATOR (MAIN STATOR)
L5 PM EXCITER STATOR
M ROTATING PERMANENT MAGNET
R2 REMOTE LEVEL RHEOSTAT
R5 SUPPRESSION RESISTOR
RFA REVOLVING FIELD ASSY
T1 VOLTAGE DROOP TRANSFORMER
(MAY NOT BE SUPPLIED)

1. CONNECT TO TERMINAL 5 FOR 1 AMP CT, CONNECT TO TERMINAL 5a FOR 5 AMP CT.

2. CONNECT REMOTE VOLTAGE ADJUST FROM 6a TO 7 AND REMOVE LINK 4-7 IF FITTED WITH A REMOTE ADJUST.

   CONNECT 6a TO 8 FOR 1V/Hz; REMOVE FOR 2V/Hz UNDERFREQUENCY SLOPE.

   CONNECT 6a TO 9 FOR 3-PHASE SENSING; OPEN FOR 1-PHASE SENSING.

3. CONNECT 2 AND 3 TO SCP250 VAR/PF CONTROLLER. SHORT WHEN NOT USED.

D2590-18.vsd
02-21-01

Figure 2-9. 4-6 Lead, Shunt Excited, Three-Phase Sensing

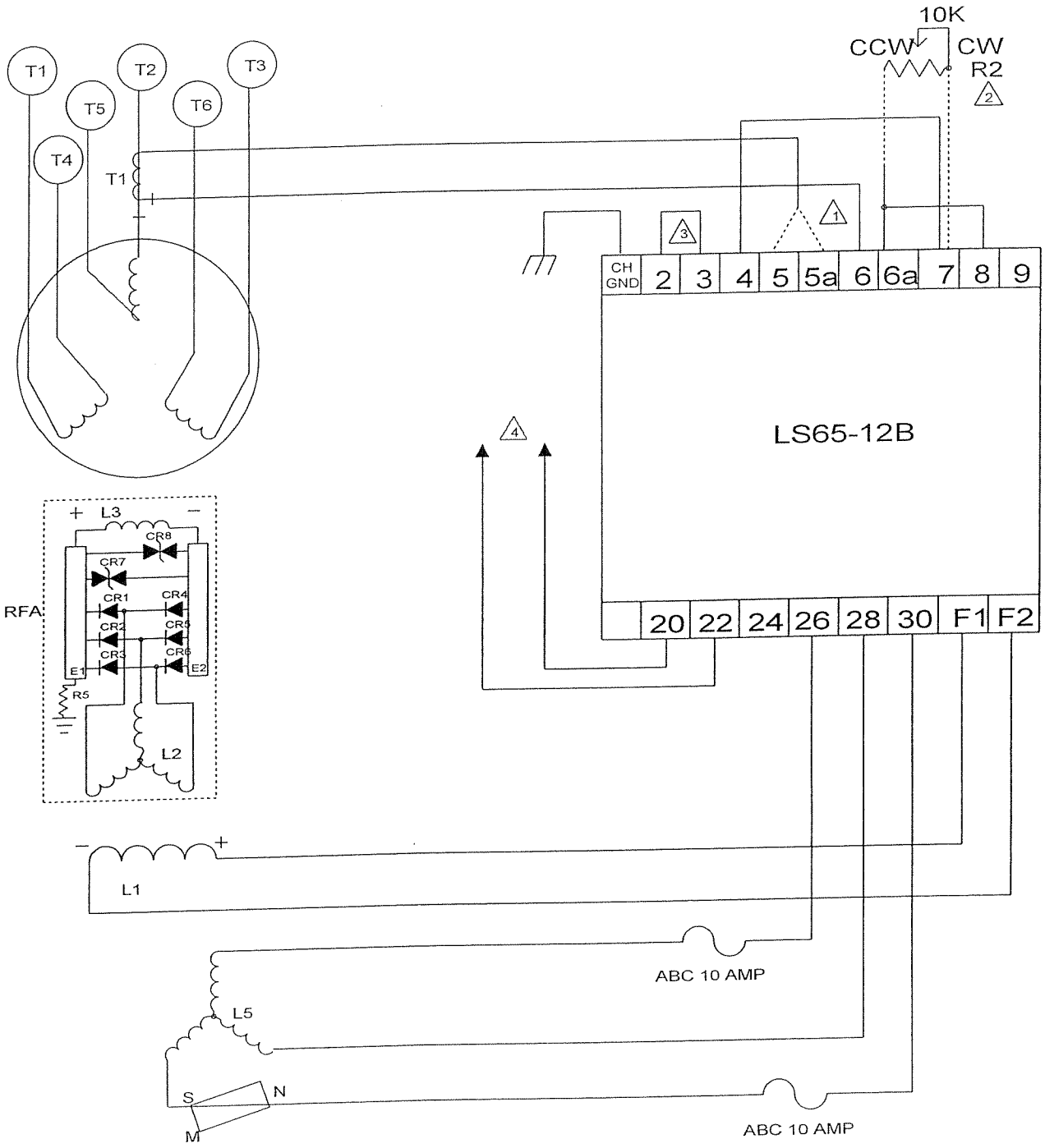

CR1-6 ROTATING RECTIFIERS
CR7,8 SURGE SUPPRESSION DIODES
E1 POSITIVE HEAT SINK
E2 NEGATIVE HEAT SINK
L1 EXCITER FIELD (STATOR)
L2 EXCITER ARMATURE (ROTOR)
L3 ROTATING FIELD (MAIN ROTOR)
L4 STATOR (MAIN STATOR)
L5 PM EXCITER STATOR
M ROTATING PERMANENT MAGNET
R2 REMOTE LEVEL RHEOSTAT
R5 SUPPRESSION RESISTOR
RFA REVOLVING FIELD ASSY

(MAY NOT BE SUPPLIED) VOLTAGE DROOP TRANSFORMER

D2590-19.vsd
02-21-01

1. CONNECT TO TERMINAL 5 FOR 1 AMP CT,
   CONNECT TO TERMINAL 5a FOR 5 AMP CT.
2. CONNECT REMOTE VOLTAGE ADJUST FROM 6a TO 7 AND REMOVE LINK 4-7 IF FITTED WITH A REMOTE ADJUST.
   CONNECT 6a TO 8 FOR 1V/Hz; REMOVE FOR 2V/Hz UNDERFREQUENCY SLOPE.
   CONNECT 6a TO 9 FOR 3-PHASE SENSING; OPEN FOR 1-PHASE SENSING.
3. CONNECT 2 AND 3 TO SCP250 VAR/PF CONTROLLER. SHORT WHEN NOT USED.
4. 3-PHASE VOLTAGE SENSING LEADS - CONNECT TO 240 VOLT SECONDARY OF METERING TRANSFORMERS.
   PHASE RELATION WITH TRANSFORMER T1 IS IMPORTAN
   CONNECT TERMINAL 22 TO P.T. ON GENERATOR T1
   CONNECT TERMINAL 24 TO P.T. ON GENERATOR T2
   CONNECT TERMINAL 20 TO P.T. ON GENERATOR T3

Figure 2-10. Medium Voltage, PMG, Single-Phase Sensing

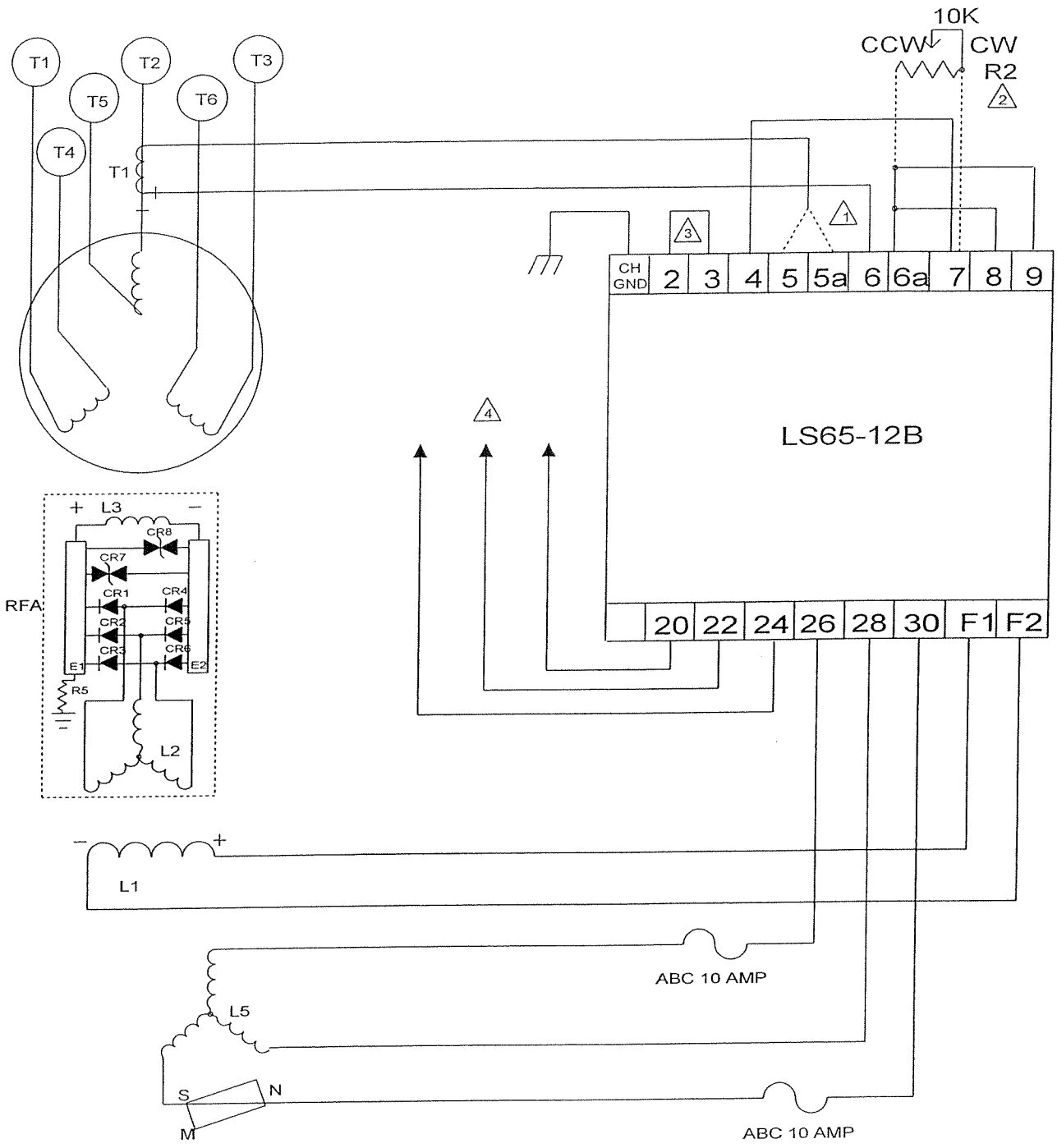

CR1-6 ROTATING RECTIFIERS
CR7,8 SURGE SUPPRESSION DIODES
E1 POSITIVE HEAT SINK
E2 NEGATIVE HEAT SINK
L1 EXCITER FIELD (STATOR)
L2 EXCITER ARMATURE (ROTOR)
L3 ROTATING FIELD (MAIN ROTOR)
L4 STATOR (MAIN STATOR)
L5 PM EXCITER STATOR
M ROTATING PERMANENT MAGNET
R2 REMOTE LEVEL RHEOSTAT
R5 SUPPRESSION RESISTOR
RFA REVOLVING FIELD ASSY

(MAY NOT BE SUPPLIED) VOLTAGE DROOP TRANSFORMER

D2590-20.vsd
02-21-01

1. CONNECT TO TERMINAL 5 FOR 1 AMP CT,
   CONNECT TO TERMINAL 5a FOR 5 AMP CT.
2. CONNECT REMOTE VOLTAGE ADJUST FROM 6a TO 7 AND REMOVE LINK 4-7 IF FITTED WITH A REMOTE ADJUST.
   CONNECT 6a TO 8 FOR 1V/Hz; REMOVE FOR 2V/Hz UNDERFREQUENCY SLOPE.
   CONNECT 6a TO 9 FOR 3-PHASE SENSING; OPEN FOR 1-PHASE SENSING.
3. CONNECT 2 AND 3 TO SCP250 VAR/PF CONTROLLER. SHORT WHEN NOT USED.
4. 3-PHASE VOLTAGE SENSING LEADS - CONNECT TO 240 VOLT SECONDARY OF METERING TRANSFORMERS.
   PHASE RELATION WITH TRANSFORMER T1 IS IMPORTAN
   CONNECT TERMINAL 22 TO P.T. ON GENERATOR T1
   CONNECT TERMINAL 24 TO P.T. ON GENERATOR T2
   CONNECT TERMINAL 20 TO P.T. ON GENERATOR T3

Figure 2-11. Medium Voltage, PMG, Three-Phase Sensing

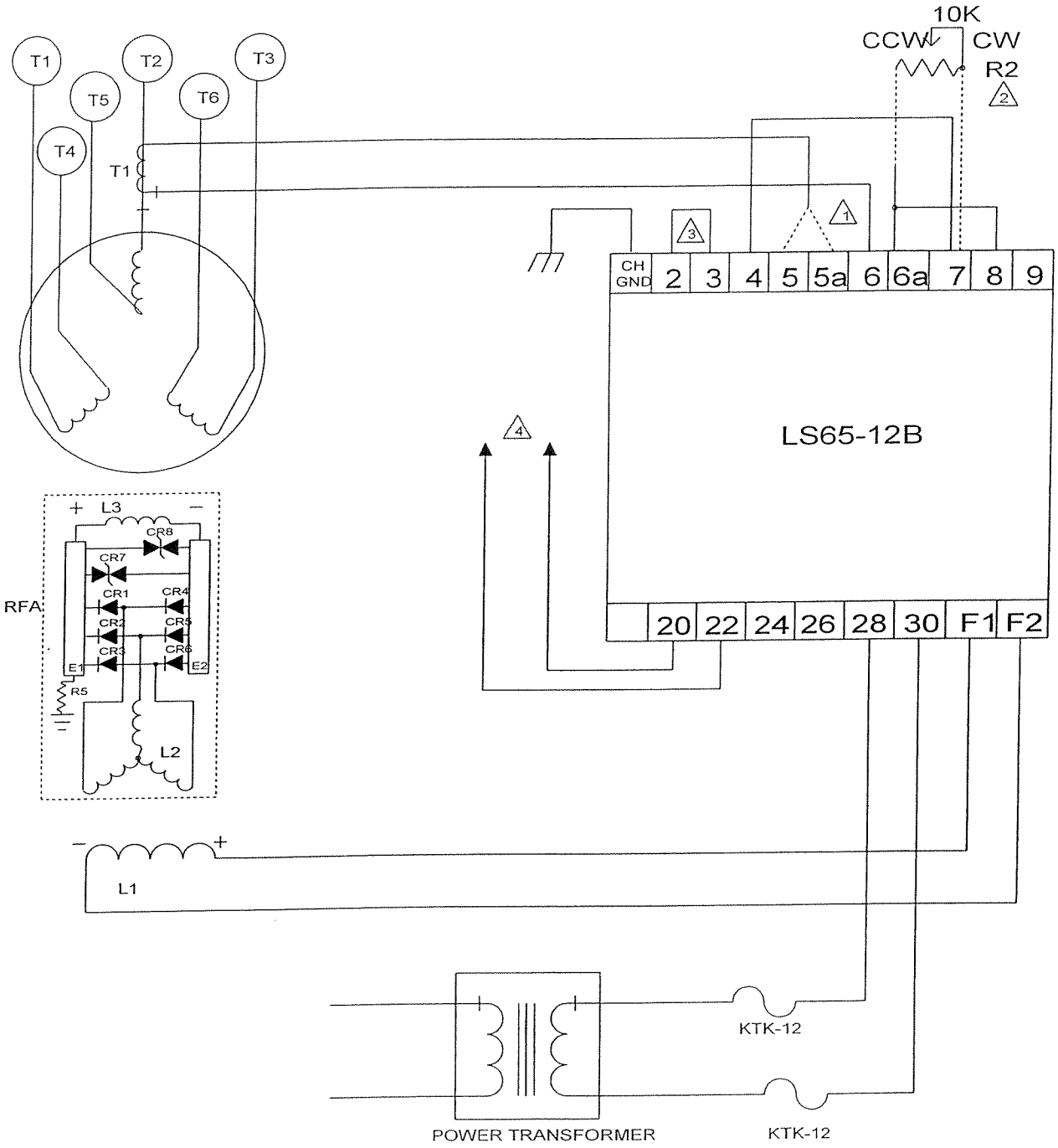

CR1-6 ROTATING RECTIFIERS
CR7,8 SURGE SUPPRESSION DIODES
E1 POSITIVE HEAT SINK
E2 NEGATIVE HEAT SINK
L1 EXCITER FIELD (STATOR)
L2 EXCITER ARMATURE (ROTOR)
L3 ROTATING FIELD (MAIN ROTOR)
L4 STATOR (MAIN STATOR)
L5 PM EXCITER STATOR
M ROTATING PERMANENT MAGNET
R2 REMOTE LEVEL RHEOSTAT
R5 SUPPRESSION RESISTOR
RFA REVOLVING FIELD ASSY

(MAY NOT BE SUPPLIED) VOLTAGE DROOP TRANSFORMER

D2590-21.vsd
02-21-01

1. CONNECT TO TERMINAL 5 FOR 1 AMP CT,
   CONNECT TO TERMINAL 5a FOR 5 AMP CT.
2. CONNECT REMOTE VOLTAGE ADJUST FROM 6a TO 7 AND REMOVE LINK 4-7 IF FITTED WITH A REMOTE ADJUST.
   CONNECT 6a TO 8 FOR 1V/Hz; REMOVE FOR 2V/Hz UNDERFREQUENCY SLOPE.
   CONNECT 6a TO 9 FOR 3-PHASE SENSING; OPEN FOR 1-PHASE SENSING.
3. CONNECT 2 AND 3 TO SCP250 VAR/PF CONTROLLER. SHORT WHEN NOT USED.
4. 3-PHASE VOLTAGE SENSING LEADS - CONNECT TO 240 VOLT SECONDARY OF METERING TRANSFORMEF
   PHASE RELATION WITH TRANSFORMER T1 IS IMPORT
   CONNECT TERMINAL 22 TO P.T. ON GENERATOR T1
   CONNECT TERMINAL 24 TO P.T. ON GENERATOR T2
   CONNECT TERMINAL 20 TO P.T. ON GENERATOR T3

Figure 2-12. Medium Voltage, Shunt Excited, Single-Phase Sensing

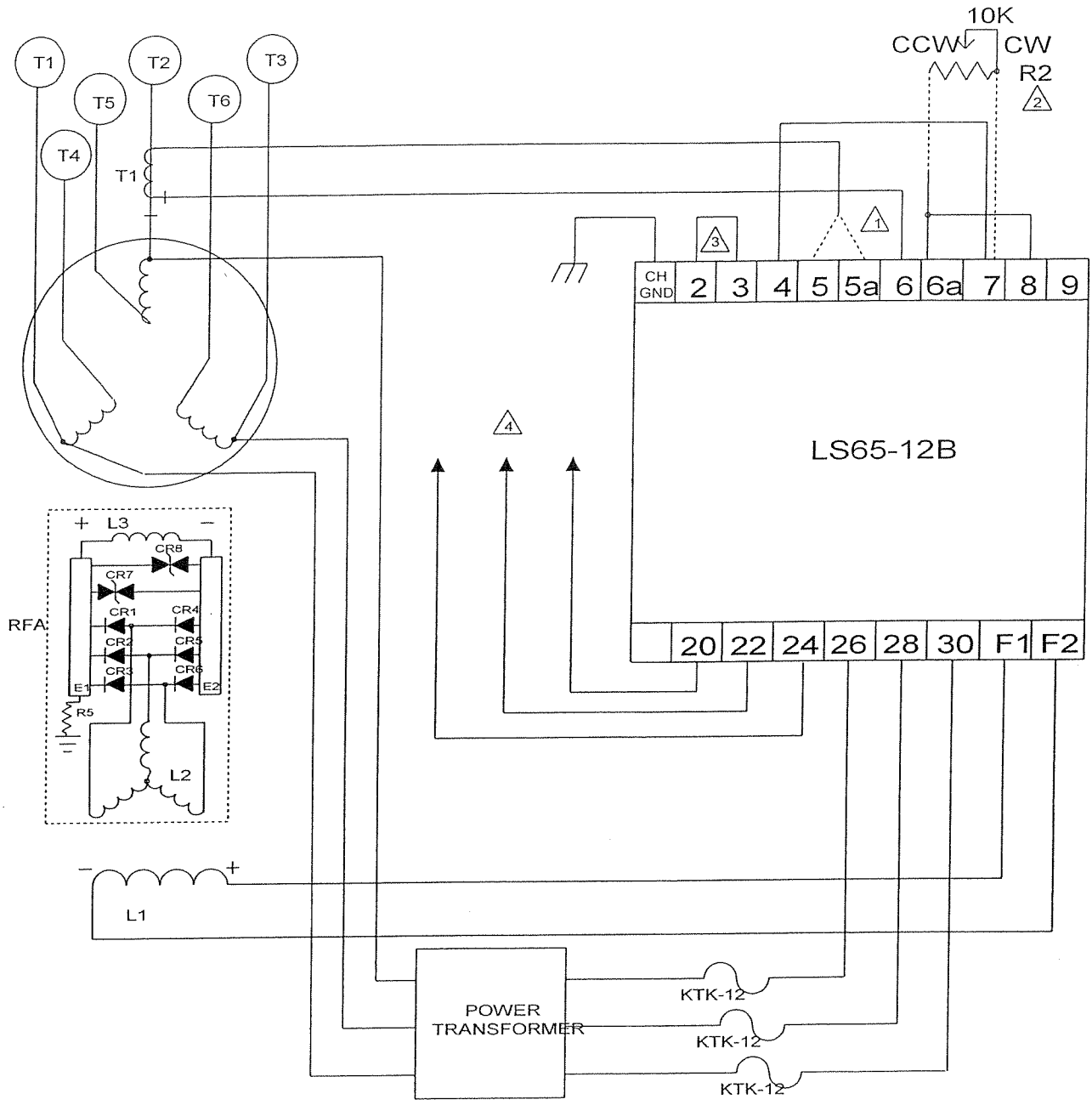

CR1-6 ROTATING RECTIFIERS
CR7,8 SURGE SUPPRESSION DIODES
E1 POSITIVE HEAT SINK
E2 NEGATIVE HEAT SINK
L1 EXCITER FIELD (STATOR)
L2 EXCITER ARMATURE (ROTOR)
L3 ROTATING FIELD (MAIN ROTOR)
L4 STATOR (MAIN STATOR)
L5 PM EXCITER STATOR
M ROTATING PERMANENT MAGNET
R2 REMOTE LEVEL RHEOSTAT
R5 SUPPRESSION RESISTOR
RFA REVOLVING FIELD ASSY

(MAY NOT BE SUPPLIED) VOLTAGE DROOP TRANSFORMER

D2590-22.vsd
02-21-01

1. CONNECT TO TERMINAL 5 FOR 1 AMP CT,
CONNECT TO TERMINAL 5a FOR 5 AMP CT.

2. CONNECT REMOTE VOLTAGE ADJUST FROM 6a TO 7 AND REMOVE LINK 4-7 IF FITTED WITH A REMOTE ADJUST.
CONNECT 6a TO 8 FOR 1V/Hz; REMOVE FOR 2V/Hz UNDERFREQUENCY SLOPE.
CONNECT 6a TO 9 FOR 3-PHASE SENSING; OPEN FOR 1-PHASE SENSING.

3. CONNECT 2 AND 3 TO SCP250 VAR/PF CONTROLLER. SHORT WHEN NOT USED.

4. 3-PHASE VOLTAGE SENSING LEADS - CONNECT TO 240 VOLT SECONDARY OF METERING TRANSFORMERS. PHASE RELATION WITH TRANSFORMER T1 IS IMPORTAN
CONNECT TERMINAL 22 TO P.T. ON GENERATOR T1
CONNECT TERMINAL 24 TO P.T. ON GENERATOR T2
CONNECT TERMINAL 20 TO P.T. ON GENERATOR T3

Figure 2-13. Medium Voltage, Shunt Excited, Three-Phase Sensing

Katolight Service - Master Repair Manual - Page 1431

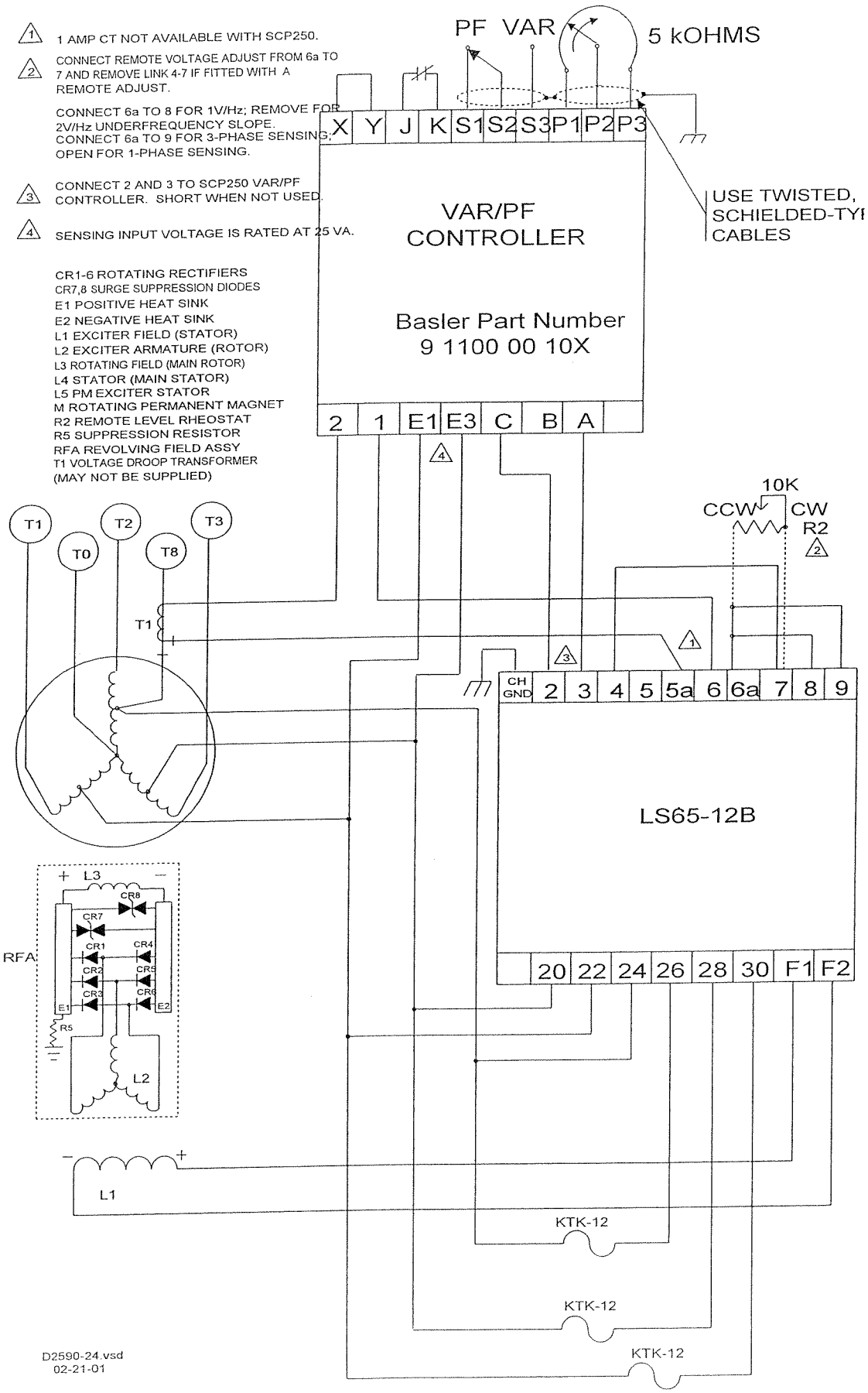

Figure 2-14. LS65-12B Interconnected With VAR/PF Controller

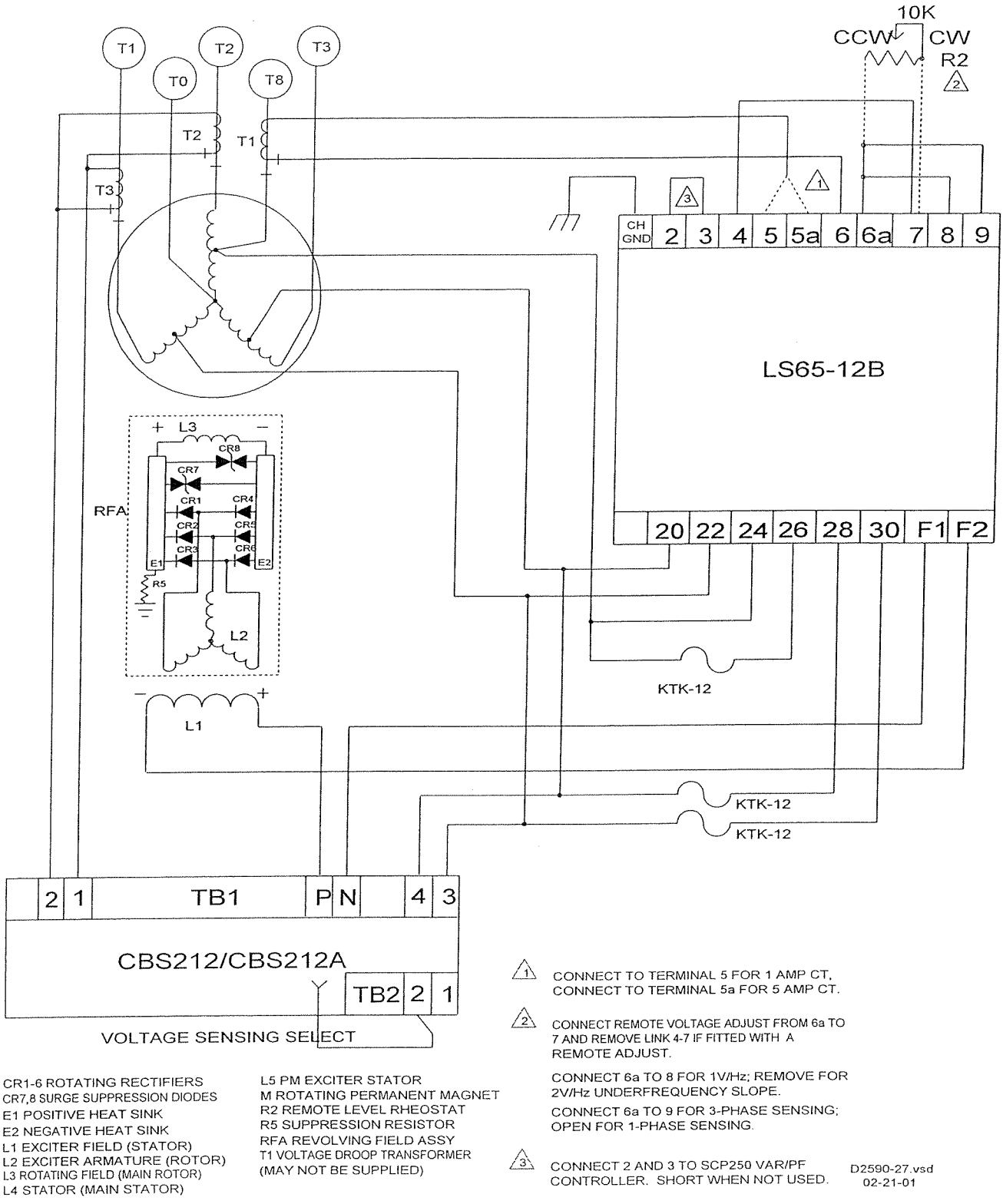

Figure 2-15. LS65-12B Interconnected With Current Boost System

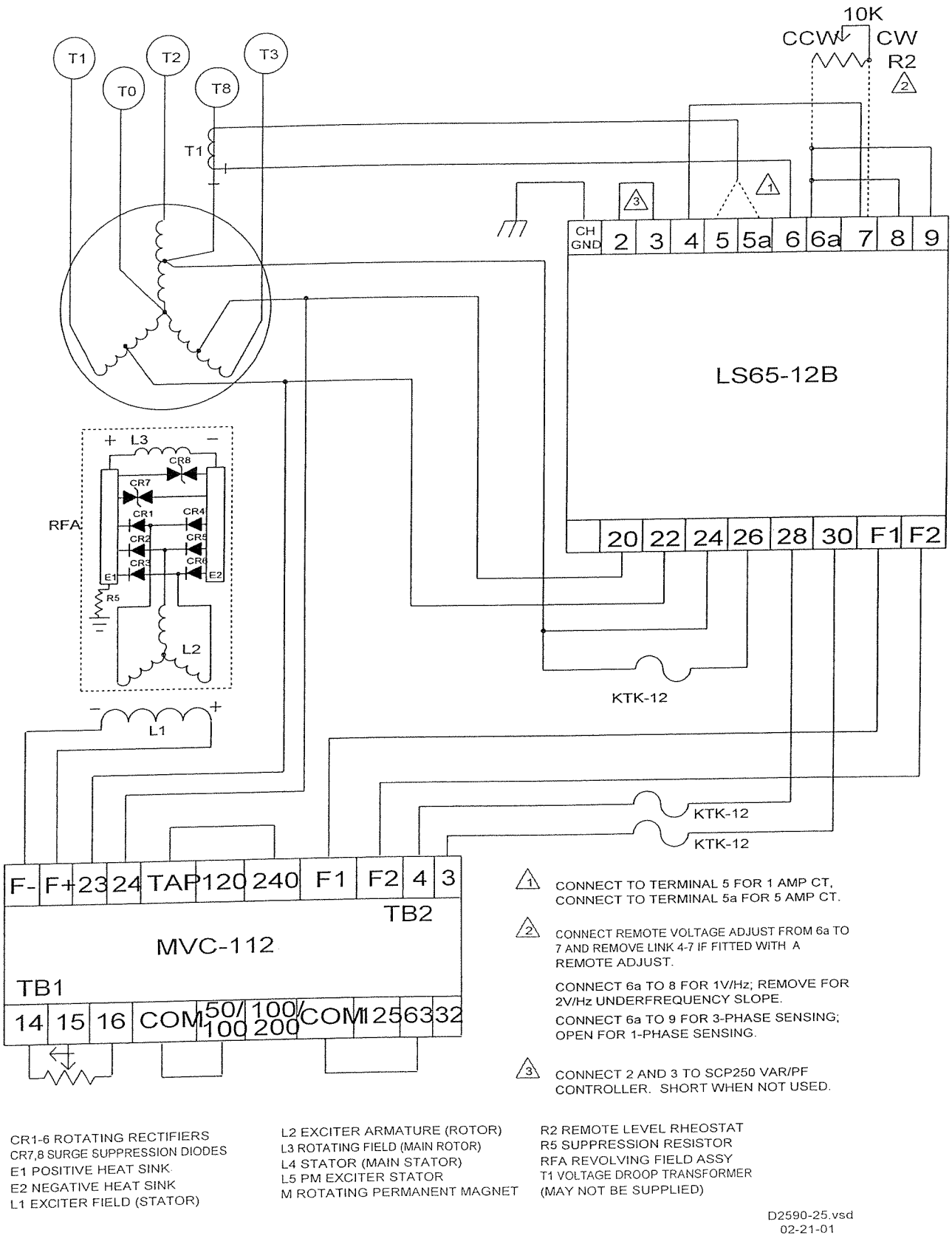

Figure 2-16. LS65-12B Interconnected With Manual Voltage Controller

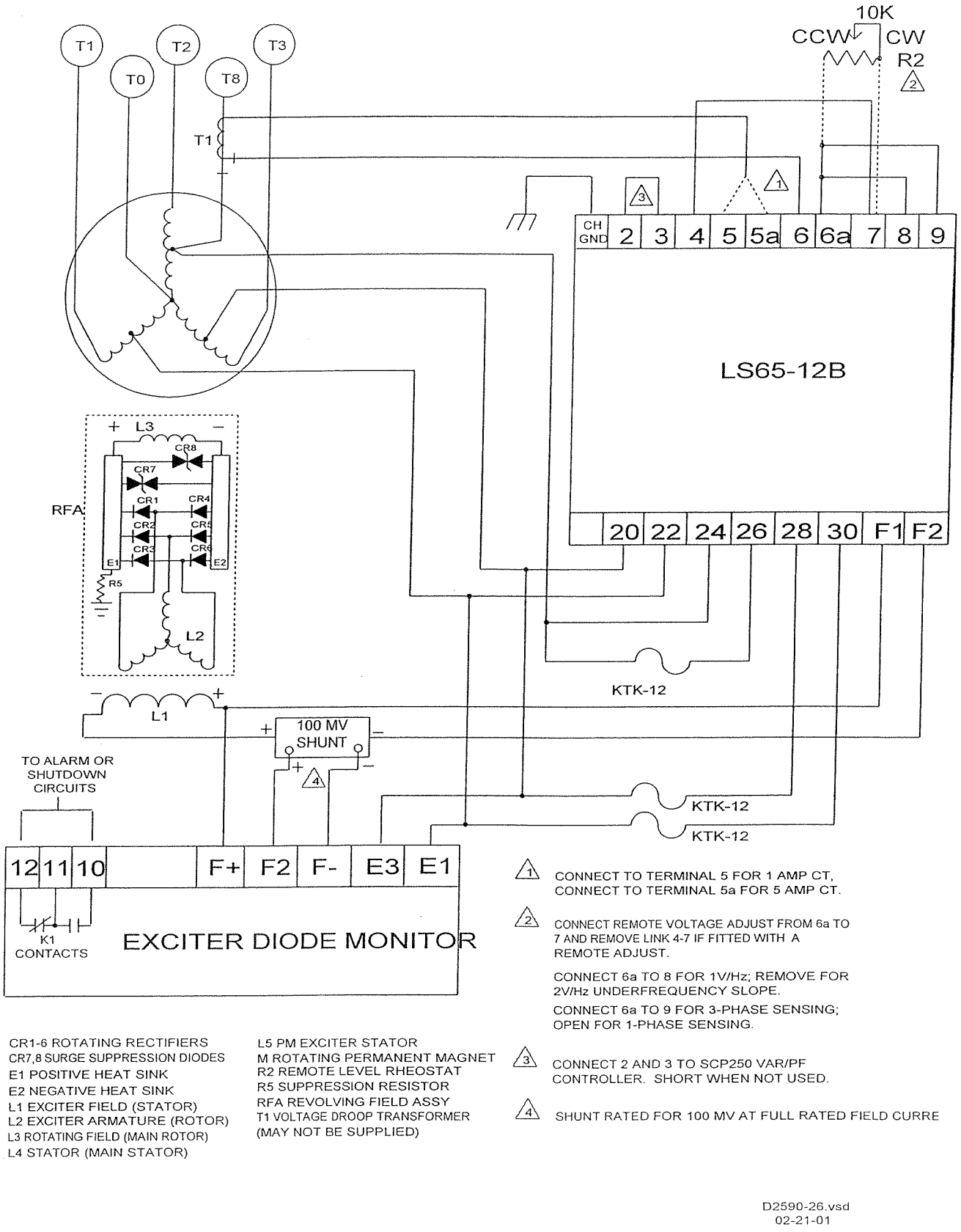

Figure 2-17. LS65-12B Interconnected With Exciter Diode Monitor

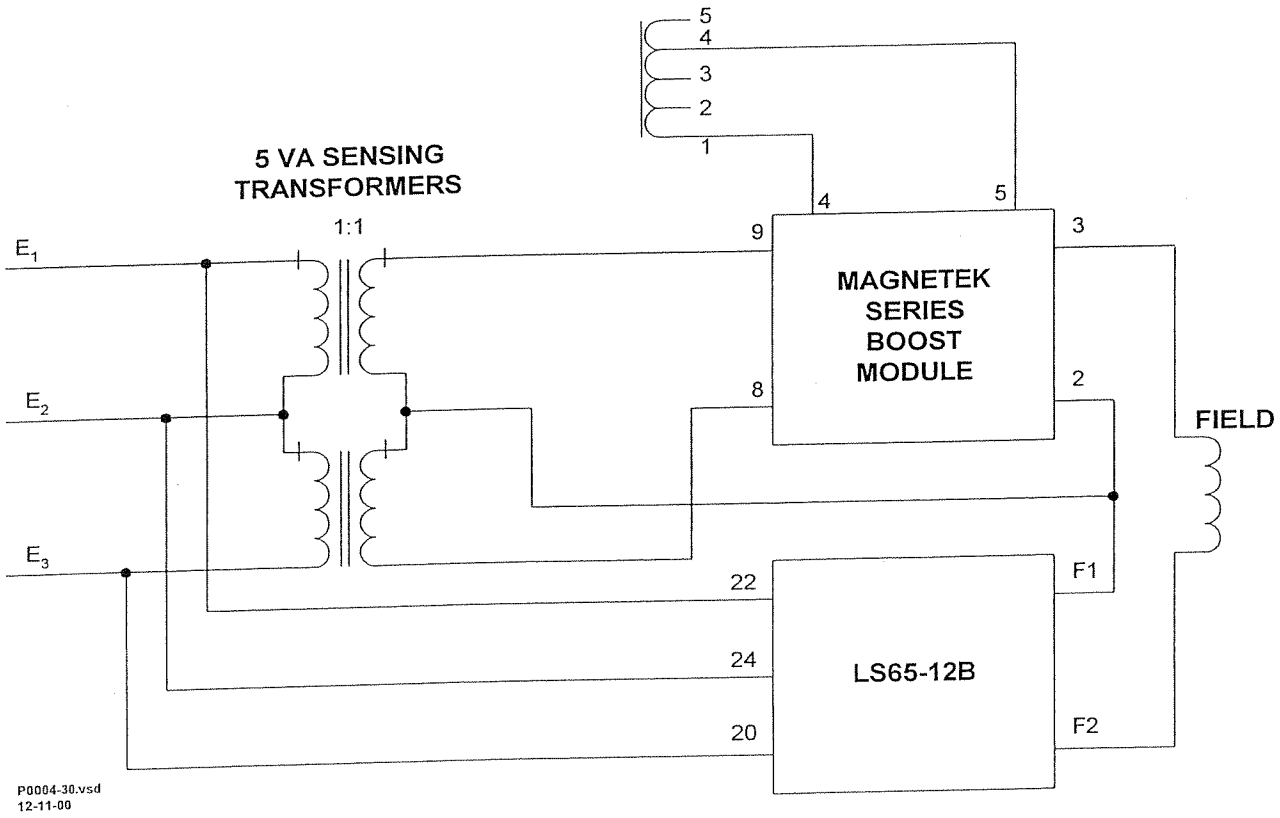

Figure 2-18. LS65-12B Interconnect With Magnetek Series-Boost Module

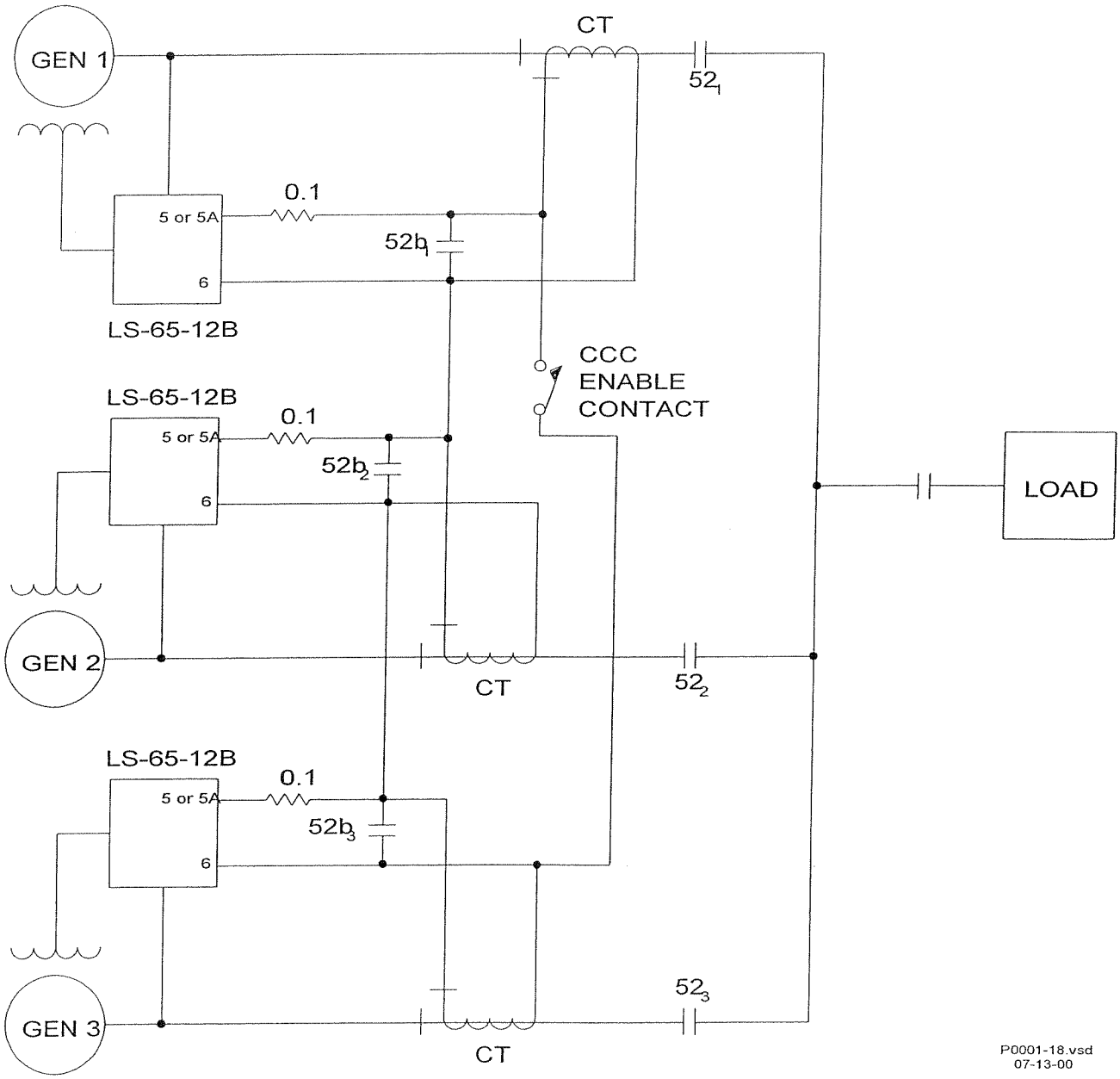

Figure 2-19. LS65-12B Cross-Current Compensation

SECTION 3 • OPERATION

GENERAL

Table 3-1 provides system start-up procedures for the LS65-12B Voltage Regulator. Symptoms of problems occurring during start-up that arise from incorrect regulator adjustment and certain generator system problems that resemble faulty regulation are included together with possible solutions. Simplifying the system by eliminating components, such as remote adjust potentiometers and other non-essential items can be helpful in the troubleshooting process. Adjustments, options, and an operational test are included in the paragraphs after the table.

PRELIMINARY SET-UP

To prevent damage to the regulator, ensure that the regulator has been installed and connected in accordance with Section 2 before proceeding with the system start-up.

SYSTEM START-UP

Refer to Table 3-1 for starting up the system.

Table 3-1. System Start-Up

Procedure	Symptom	Remedy
1. Perform the preliminary set-up.	N/A	N/A
2. Start prime mover and bring up to rated speed.	a. Voltage does not build-up.	a. Flash field. b. Remove power for 1 minute to allow the over excitation circuit to reset. c. Troubleshoot. See Section 4.
	b. Voltage builds up and then decays.	a. Troubleshoot. See Section 4.
3. Slowly adjust **VOLT** adjustment or external voltage adjust rheostat until voltage reaches nominal.	a. Voltage does not build up to rated value.	a. Check generator output for shorted or excessive load. b. Troubleshoot. See Section 4.
	b. Voltage high and uncontrollable.	a. Troubleshoot. See Section 4.
4. Apply and remove load to check stability.	Generator response too slow or is hunting (oscillating).	a. Check generator output for shorted or excessive load. Adjust STB with no load applied. b. Check stability of governor system. c. Troubleshoot. See Section 4.

Katolight Service - Master Repair Manual - Page 1438

Procedure	Symptom	Remedy
5. Check regulation under normal operating conditions.	Poor regulation.	a. Check that prime mover is up to speed. b. Check that voltmeter is connected at the same point as the regulator sensing. c. Use an average sensing voltmeter (not a RMS sensing). d. Troubleshoot. See Section 4.
6. Reduce generator frequency. Generator output should decrease from this point.	Generator output voltage does not decrease at desired frequency.	a. Check that all wiring is in accordance with Section 2. b. Adjust FREQ control.

ADJUSTMENTS

For location of the adjustments referenced in the following paragraphs, refer to Figure 2-1.

Field Flashing

When the regulator is operated with the generator for the first time, the polarity of the residual magnetism may not be correct or of sufficient magnitude. If generator residual voltage is less than 6 Vac at terminals 26,28 and 30 shut down the prime mover and proceed with the following steps:

CAUTION

Do not flash the field with the generator in motion. The regulator may be damaged.

(1) With the prime mover at rest, apply a dc source (ungrounded), of not more than 24 Vdc, to terminals **F1** (positive) and **F2** (negative) in series with a limiting resistor. Use one (1) ohm of resistance for each volt from the dc power source with a power rating of least one (1) watt per ohm.

EXAMPLE: If using a 24 Vdc source, use a 24-ohm, 24-watt resistor.

(2) Allow the field to be flashed for approximately ten seconds before removing the dc source.

(3) If voltage build-up does not occur after performing steps (1) and (2), verify the polarity of the dc source used in steps (1) and (2) and re-perform.

Frequency Roll-Off Adjustment

The underfrequency knee can be set for 50 (60) Hz operation as described in the following paragraphs.

(1) Adjust the generator frequency for 50 (60) Hz.

(2) Adjust the underfrequency potentiometer (UF) CCW.

(3) Adjust the Voltage Adjust for 200 (240) Vac.

(4) Adjust the underfrequency potentiometer (UF) CW until the voltage begins to decrease.

(5) Adjust the underfrequency potentiometer (UF) CCW until the voltage just returns to the value set in Step 3.

(6) The underfrequency knee is now set just below the nominal operating frequency. Further rotation in the CCW direction will lower the frequency at which underfrequency compensation begins.

(7) Connecting a jumper from terminal 8 to terminal 6a will provide an underfrequency slope of 1 pu V/Hz. No connection to terminal 8 will result in an underfrequency slope of 2 pu V/Hz.

Stability (STB) Adjustment

An oscilloscope or other voltage-recording device should be used if an optimal stability setting is desired. **Adjust the stability setting with the generator at no load.** Good response can be obtained with the following procedure.

(1) Rotation of the front panel **STB** control in the clockwise (CW) direction will slow response time.

(2) Rotation of the front panel **STB** control in the counter-clockwise (CCW) direction will speed response time. If rotated too far CCW, the generator voltage may oscillate (hunt).

(3) Rotate the front panel **STB** control CCW until the system just begins to oscillate and then rotate CW just past the point where oscillation occurred.

Voltage (VLT ADJ) Adjustment

(1) Installation of a jumper across terminals 4 and **7** allows the internal (front panel) **VLT ADJ** adjustment to vary the generator nominal voltage over the operating range.

(2) Remove the jumper between terminals **4** and **7** and connect a 10k ohm external voltage adjust potentiometer across terminals **6** and **7** to allow operation of the external voltage adjust potentiometer. The internal voltage adjustment should be set fully CW for proper operation of the external adjustment.

Factory Voltage Adjust Range Calibration Adjustment

CAUTION

The factory calibration (FAC CAL) adjustment is intended for use by factory technicians only. The following procedure can be used if the factory calibration has been disturbed.

(1) With the voltage regulator operating on a generator, adjust the calibration potentiometer fully ccw and the voltage adjust potentiometer fully cw. Adjust the calibration potentiometer cw until the generator voltage is 272 ± 1 Vac. Adjust the voltage adjust ccw and verify the generator voltage is between 156 and 180 Vac. The unit is calibrated and the calibration potentiometer can be sealed.

Parallel Droop (DRP) Compensation

(1) Variable parallel droop compensation levels can be obtained by adjusting the droop potentiometer. CW rotation increases the amount of droop for a given condition.

OPTIONS

The LS65-12B may be equipped with the following options to enhance operational characteristics. Characteristics of these options are defined in the following paragraphs.

Remote Voltage Adjust

Connect a 10 k ohm potentiometer from terminals 6 to 7, remove the jumper from terminal 4 to 7 and adjust the internal voltage adjust potentiometer fully clock wise to allow operation of a remote voltage adjust.

Excitation Disable

This option provides for disabling of the excitation system by removal of power from the LS65-12B. A switch removing voltage from terminals 26, 28 and/or 30 will remove power.

Current Boost Module

This option provides short circuit support during motor starting or generator fault clearing. When these conditions cause the generator voltage to be low, special current transformers provide excitation to the exciter field to boost the generator output.

Var/PF Control

This option allows the LS65-12B to regulate the var and power factor while the generator is connected to an infinite or utility bus. The var/PF option (Model Number SCP250G-50 for 50-hertz operation or SCP250G-60 for 60-hertz operation) supplies a dc signal into the LS65-12B terminals **2** and **3** to regulate the SCP250 var or power factor setting.

Manual Voltage Control

This option provides a manual back-up channel for manually controlling the generator output during generator start-up and commissioning or in the unlikely event that the LS65-12B should fail. This option comes in two models. Manual voltage controller model MVC-112 is suitable for use with the LS65-12B

OPERATIONAL TEST

To operationally test any LS65-12B, perform the following steps.

a. Connect the voltage regulator as shown by Figure 3-1 and apply 240 Vac.

b. Adjust the front panel **VLT ADJ** control fully counterclockwise (CCW).

   RESULT: Observe that the lamp is OFF.

c. Adjust the front panel **VLT ADJ** control clockwise (CW).

   RESULT: Observe that the lamp is now ON.

d. Adjust the front panel **VLT ADJ** control until the lamp just goes out.

Regulator operation is satisfactory if the above results are obtained. Stability, however, must be tested with the generator and regulator in operation.

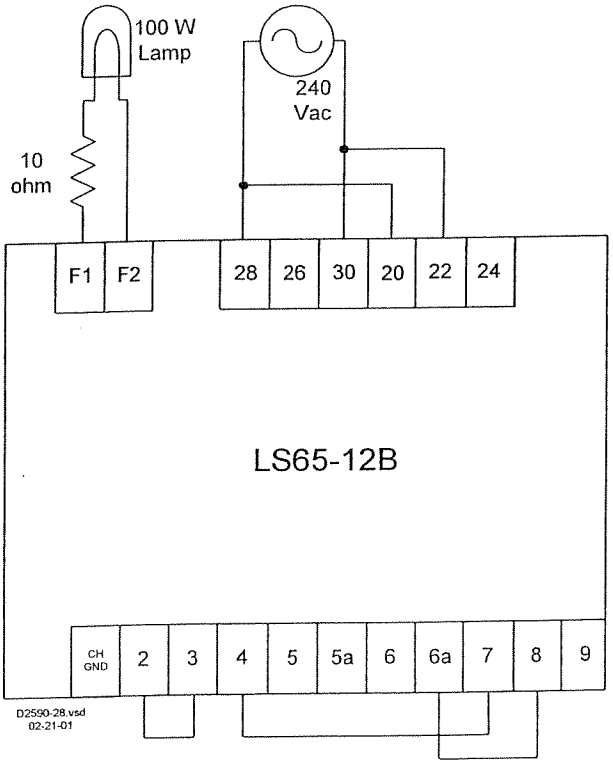

Figure 3-1. Operational Test Setup

SECTION 4 • MAINTENANCE

PREVENTIVE MAINTENANCE

A periodic inspection should be made of the voltage regulator to ensure that it is clean and free from accumulations of dust and moisture. Be sure that all connections are clean and tight.

TROUBLESHOOTING

In case of failure/defective operation of the unit, the following table (Table 4-1) is provided to aid in the determination of the cause and the possible solution. Simplifying the system by eliminating components, such as remote adjust potentiometers and other non-essential items can be helpful in the troubleshooting process.

Table 4-1. Troubleshooting

Symptom	Possible Cause	Remedy
Voltage does not build up.	a. No voltage or incorrect voltage to power input at terminals **26**, **28** or **30**.	a. Flash field. b. Verify wiring. c. Check fuses. d. Replace regulator.
	b. Overexcitation circuit is shutting off regulator.	Shutdown prime mover for 1 minute then restart. Watch for high field voltage.
Voltage builds up and then decays.	a. Defective external voltage adjust rheostat or no connection between terminals 4 and **7**.	Replace external voltage adjust rheostat or the jumper across terminals 4 and 7 and verify operation with the internal voltage adjust.
	b. Single or three phase jumper incorrect.	Verify single or three phase sensing is applied to 20, 22 and/or 24 and verify connection from upper terminal **6a** to **9** is correct.
	c. Defective regulator.	Replace regulator.
Voltage does not build up to rated value.	a. Single or three phase jumper incorrect.	Verify single or three phase sensing is applied to 20, 22 and/or 24 and verify connection from upper terminal **6a** to **9** is correct.
	b. Internal or external voltage adjustments are improperly set.	Adjust front panel **VOLT** control and/or external voltage adjust rheostat. Verify proper connection from 4 to 7.
	c. The regulator is operating on the underfrequency curve.	Verify the generator is rotating at the proper frequency. Verify proper adjustment of the underfrequency pot.
	d. Faulty regulator.	Replace regulator.

Katolight Service - Master Repair Manual - Page 1443

Symptom	Possible Cause	Remedy
Voltage does not build up to rated value (Continued).	e. Terminals 2 and 3 are not jumpered and there is no var/PF controller connected in the system.	a. Jumper terminals 2 and 3. b. Connect var/PF controller to terminals 2 and 3.
	f. Jumpers are set for single-phase sensing and three - phase voltage is applied.	Install jumpers correctly.
Voltage high and uncontrollable.	a. No sensing input.	Verify wiring.
	b. Single or three phase jumper incorrect.	Verify single or three phase sensing is applied to 20, 22 and/or 24 and verify connection from upper terminal **6a** to **9** is correct.
	c. Faulty regulator.	Replace regulator.
	d. Voltage adjust pot in use and terminals 4 and 7 are still jumpered.	Remove jumper.
	e. Voltage adjust pot not in use and terminals 4 and 7 are not jumpered.	Install jumper.
	f. Jumpers are set for three-phase sensing and single-phase voltage is applied.	Install jumpers correctly.
Generator response too slow or hunting.	a. Improper front panel **STB** adjustment.	Re-adjust front panel **STB** adjustment.
	b. Improper governor setting.	Adjust governor.
	c. Faulty regulator.	Replace regulator.
Poor regulation.	a. Low prime mover speed.	Verify prime mover speed.
Improper droop. a. Output increases based on the amount of current and the droop pot setting.	a. CT input is reversed	Correct CT input connections.
b. Too much or too little droop.	b. CT input improperly connected to the one ampere or five ampere input terminals.	Correct CT input connections.
c. Improper droop characteristics.	c. Sensing Input connected out of phase.	Correct sensing input connections.

SECTION 5 • MANUAL CHANGE INFORMATION

CHANGES

Substantive changes in this manual to date are summarized in Table 5-1.

Table 5-1. Summary of Changes

Revision	Summary of Changes	ECO	Date
A	Changed Table 2-2 to align with Figure 2-1 and added new Figure 2-18, *LS65-12B, Cross Current Compensation*. Added Section 5, *Manual Change Information.*	9963	07/2000
B	Added "When automatic voltage regulation is used with a permanent magnetic excited generator, ensure that the jumpers are removed between terminals 20 - 24, 22 - 26, and 24 – 30." to the first paragraph in Section 2, *Installation, Connections*. Added "Adjust STB with no load applied." to Table 3-1, Procedure 4, Remedy a. Added "Adjust the stability setting with no load on the generator." to Section 3, *Operation, Adjustments, Stability (STB) Adjustment*, first paragraph. Changed Table 4-1, *Troubleshooting*.	11484	11/2000
C	Corrected Table 1-1 input voltage ranges by changing VA to Vac and added single-phase voltage range. Added European Community conformation standards specifications. Corrected terminal numbers in the first paragraph, page 2-2, and made the last sentence in that paragraph bold typeface. Added Note 4 to Figure 2-14. Added new Figure 2-18, and renumbered old 2-18 to Figure 2-19. Reworded the second sentence under *Stability (STB) Adjustment* on page 3-3, and made the entire sentence in bold typeface.	11686	12/2000
D	Changed Figure 2-1 to incorporate new standoffs. Added Section 5 to the Table of Contents.	12301	02/2001
E	Added chassis ground terminal to Table 2-1 and the illustrations in Section 2. Added CW and CCW to rheostat R2 in Figures 2-2 through 2-17, added a jumper between Terminal 9 and rheostat R2 in Figure 2-11, deleted two callouts for Note 1 in Figure 2-14 and changed text for Note 1, deleted the Spike Suppression Module from Figures 2-15 and 2-16, and corrected Figure 2-19 to identify appropriate auxiliary breaker contacts and generators.	12393	02/2001

LEROY SOMER

3742 en - 04.2003 / a



This manual is to be given to the end user

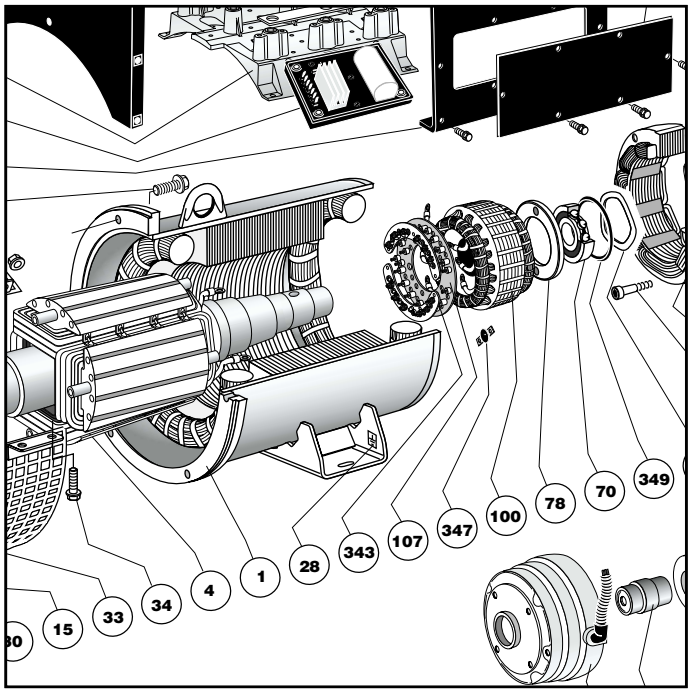

LSA 47.2 - 4 POLES

ALTERNATORS

Installation and maintenance

LSA 47.2 - 4 POLES
ALTERNATORS

This manual concerns the alternator which you have just purchased.

The latest addition to a whole new generation of alternators, this range benefits from the experience of the leading manufacturer worldwide, using advanced technology and incorporating strict quality control.

We wish to draw your attention to the contents of this maintenance manual. By following certain important points during installation, use and servicing of your alternator, you can look forward to many years of trouble-free operation.

SAFETY MEASURES

Before using your machine for the first time, it is important to read the whole of this installation and maintenance manual.

All necessary operations and interventions on this machine must be performed by a qualified technician.

Our technical support service will be pleased to provide any additional information you may require.

The various operations described in this manual are accompanied by recommendations or symbols to alert the user to the potential risk of accidents. It is vital that you understand and take notice of the different warning symbols used.

WARNING

Warning symbol for an operation capable of damaging or destroying the machine or surrounding equipment.



Warning symbol for general danger to personnel.



Warning symbol for electrical danger to personnel.

WARNING SYMBOLS

A set of self-adhesive stickers depicting the various warning symbols is included with this maintenance manual. They should be positioned as shown in the drawing below once the machine has been fully installed.

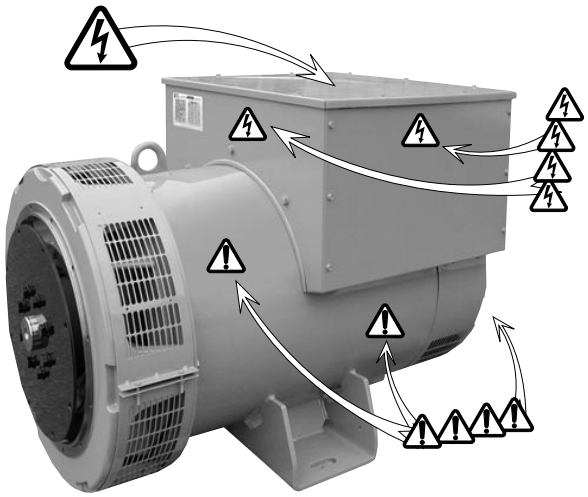

Note: LEROY-SOMER reserves the right to modify the characteristics of its products at any time in order to incorporate the latest technological developments. The information contained in this document may therefore be changed without notice.

Copyright 2003: LEROY-SOMER
This document is the property of:
MOTEURS LEROY-SOMER
It may not be reproduced in any form without prior authorization.
All brands and models have been registered and patents applied for.

Katolight Service - Master Repair Manual - Page 1448

LSA 47.2 - 4 POLES
ALTERNATORS

CONTENTS

1 - RECEIPT

1.1 - Standards and safety measures 4

1.2 - Inspection 4

1.3 - Identification 4

1.4 - Storage 4

2 - TECHNICAL CHARACTERISTICS

2.1 - Electrical characteristics 5

2.2 - Mechanical characteristics 5

2.3 - SHUNT excitation system 6

2.4 - AREP/PMG excitation system 7

3 - INSTALLATION

3.1 - Assembly 9

3.2 - Checks prior to first use 9

3.3 - Terminal connection diagrams 10

3.4 - Commissioning 12

3.5 - Setting up 13

4 - SERVICING - MAINTENANCE

4.1 - Safety measures 16

4.2 - Routine maintenance 16

4.3 - Fault detection 17

4.4 - Mechanical defects 17

4.5 - Electrical faults 18

4.6 - Dismantling, reassembly 20

4.7 - Installation and maintenance of the PMG 22

4.8 - Table of characteristics 23

5 - SPARE PARTS

5.1 - First maintenance parts 24

5.2 - Technical support service 24

5.3 - Accessories 24

5.4 - Exploded views, parts list 25

LSA 47.2 - 4 POLES
ALTERNATORS
RECEIPT

1 - RECEIPT

1.1 - Standards and safety measures

Our alternators comply with most international standards and are compatible with:
- the recommendations of the
International Electrotechnical Commission
IEC 34-1, (EN 60034).
- the recommendations of the
International Standards Organisation ISO 8528.
- the European Community directive 89/336/EEC on Electromagnetic Compatibility (EMC).
- the European Community directives
73/23/EEC and 93/68/EEC (Low Voltage Directive)
They are CE marked with regard to the LVD (Low Voltage Directive) in their role as a machine component. A declaration of incorporation can be supplied on request.
Before using your generator for the first time, read carefully the contents of this installation and maintenance manual, supplied with the machine. All operations performed on the generator should be undertaken by qualified personnel with specialist training in the commissioning, servicing and maintenance of electrical and mechanical machinery. This maintenance manual should be retained for the whole of the machine's life and be handed over with the contractual file.
The various operations described in this manual are accompanied by recommendations or symbols to alert the user to the potential risk of accidents. It is vital that you understand and take notice of the different warning symbols used.

1.2 - Inspection

On receipt of your alternator, check that it has not suffered any damage in transit. If there are obvious signs of knocks, contact the transporter (you may be able to claim on their insurance) and after a visual check, turn the machine by hand to detect any malfunction.

1.3 - Identification

The alternator is identified by means of a nameplate fixed on the machine (see drawing).
Make sure that the nameplate on the machine conforms to your order.
The machine name is defined according to various criteria, for example: LSA 47.2 M7 C6/4 -
• LSA: name used in the PARTNER range
M: Marine
C: Cogeneration
T: Telecommunications.
• 47.2: machine type
• M7: model
• C: excitation system
(C: AREP/J: SHUNT or PMG/E: COMPOUND)
• 6/4 : winding number / number of poles.

1.3.1 - Nameplate

So that you can identify your machine quickly and accurately, we suggest you write its specifications on the nameplate below.

1.4 - Storage

Prior to commissioning, machines should be stored:
- Away from humidity: in conditions of relative humidity of more than 90%, the machine insulation can drop very rapidly, to just above zero at around 100%; monitor the state of the anti-rust protection on unpainted parts. For storage over an extended period, the machine can be placed in a sealed enclosure (heatshrunk plastic for example) with dehydrating sachets inside, away from significant and frequent variations in temperature to avoid the risk of condensation during storage.
- If the area is affected by vibration, try to reduce the effect of these vibrations by placing the generator on a damper support (rubber disc or similar) and turn the rotor a fraction of a turn once a fortnight to avoid marking the bearing rings.

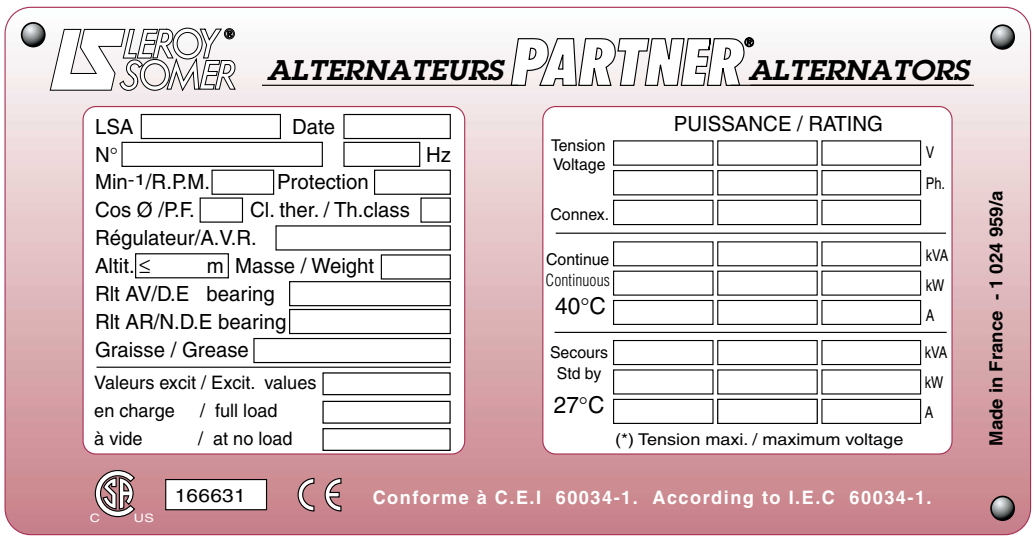

Katolight Service - Master Repair Manual - Page 1450

LSA 47.2 - 4 POLES
ALTERNATORS
TECHNICAL CHARACTERISTICS

2 - TECHNICAL CHARACTERISTICS

2.1 - Electrical characteristics

The LSA 47.2 alternator is a machine without sliprings or revolving armature brushes, wound as “2/3 pitch”, 6 or 12-wire, with class H insulation and a field excitation system available in either SHUNT, AREP or "PMG" version (see diagrams). Interference suppression conforms to standard EN 55011, group 1, class B.

2.1.1 - Electrical options

- Stator temperature detection sensors
- Bearing sensors (PTC, PT100, etc)
- Space heater

2.2 - Mechanical characteristics

- Steel frame
- Cast iron end shields
- Protected ball bearings, greased for life
- Mounting arrangements:

IM 1201 (MD 35) foot and flange mounted, single-bearing with SAE coupling disc.
IM 1001 (B 34) double-bearing with SAE flange and standard cylindrical shaft extension.

- Drip-proof machine, self-cooled
- Degree of protection: IP 23

2.2.1 - Mechanical options

- Air inlet filter
- Regreasable ball bearings
- IP 44 protection

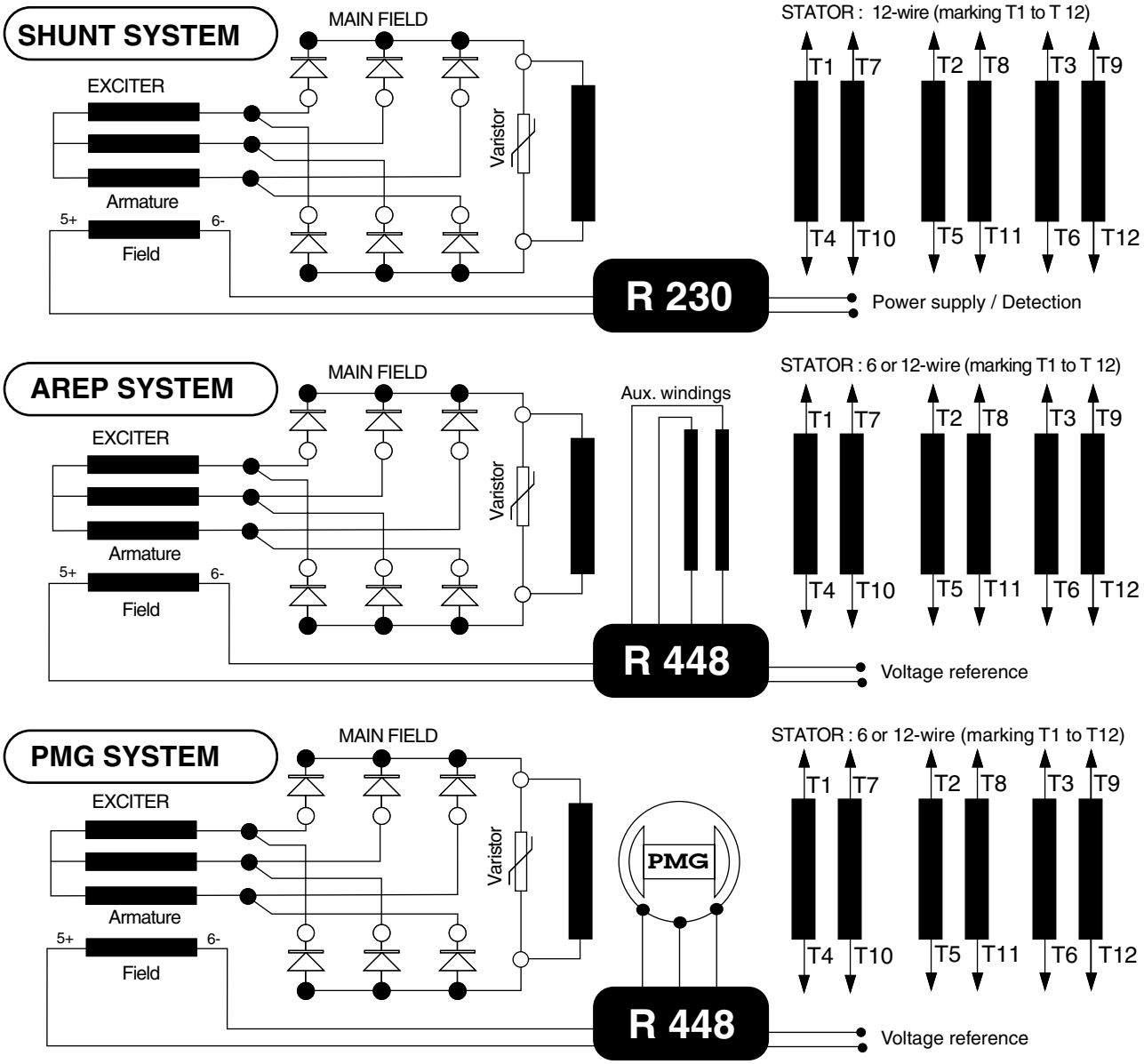

LSA 47.2 - 4 POLES
ALTERNATORS
TECHNICAL CHARACTERISTICS

2.3 - SHUNT excitation system

The alternator with Shunt excitation is self-excited with an **R 230** voltage regulator. The regulator monitors the excitation current of the exciter as a function of the alternator output voltage. Very simple in design, the alternator with shunt excitation has no sustaining short-circuit capacity.

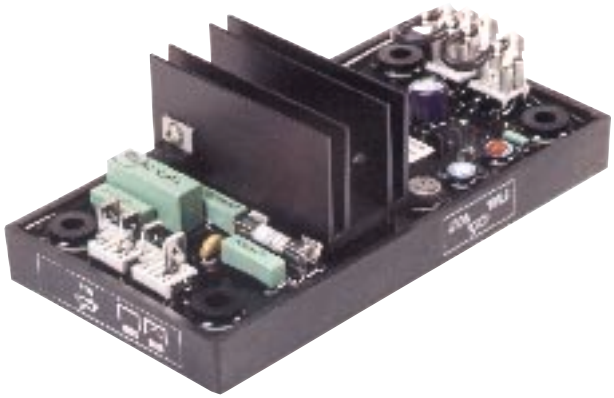

2.3.1 - R 230 AVR

- Voltage regulation: around ± 0.5%
- Voltage sensing range 85 to 139 V (50/60 Hz)
- Rapid response time (500 ms) for a transient voltage variation amplitude of ± 20%
- Voltage setting **P1**
- Stability setting **P2**
- Power supply protected by 8 A fuse, slow action (tolerates 10 A for 10 s)
- Frequency: 50 Hz with **ST3** jumper - 60 Hz without ST3 jumper
- Factory-set underspeed protection **P3**

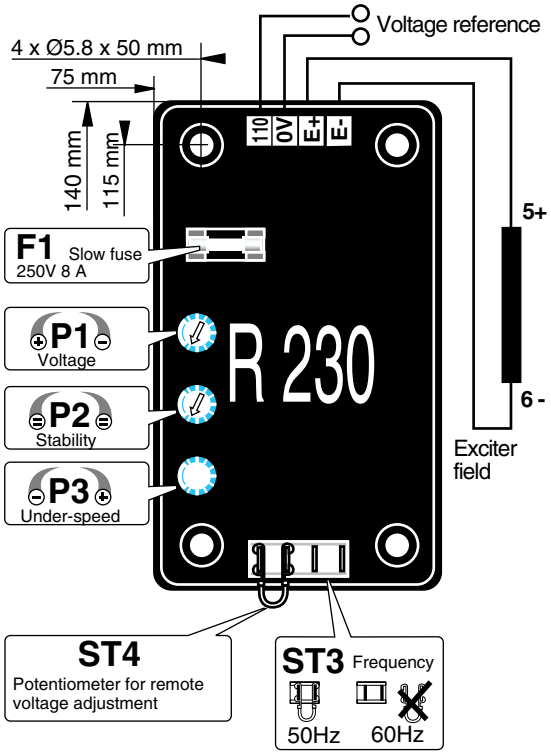

2.3.2 - R 230 AVR options

Potentiometer for remote voltage adjustment, 1000 Ω /0.5 W min: adjustment range ± 5%.
Remove the **ST4** jumper.

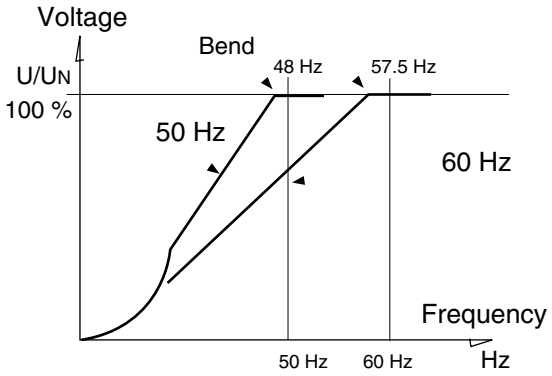

2.3.3 - Additional functions with the R 448

As an option, the LSA 47.2 SHUNT alternator can work with the R 448 AVR in order to obtain the following functions:
- Parallel operation between alternators with C.T.
- Parallel operation with the mains with C.T. and R 726 module
- 3-phase sensing (R 731 module)
- LAM function integrated in the R 448 AVR

In this case, the R 448 AVR replaces the R 230.

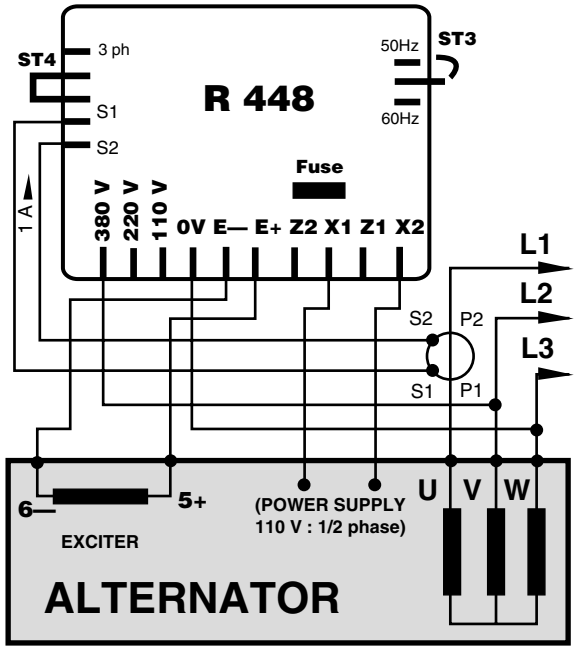

For adjustment and maintenance, refer to section 3.5 of this manual.

Katolight Service - Master Repair Manual - Page 1452

LSA 47.2 - 4 POLES
ALTERNATORS
TECHNICAL CHARACTERISTICS

2.4 - AREP/PMG excitation system

For both AREP & PMG excitation systems, the alternator voltage regulator is the R 448.

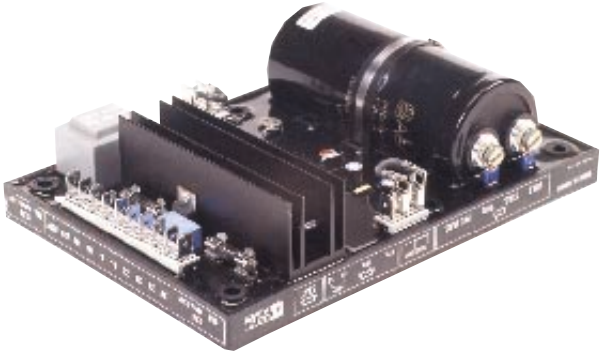

With **AREP** excitation, the electronic AVR is powered by two auxiliary windings which are independent of the voltage sensing circuit. The first winding (X1, X2) has a voltage proportional to that of the alternator (Shunt characteristic), the second (Z1, Z2) has a voltage in proportion with the stator current (compound characteristic: Booster effect). The power supply voltage is rectified and filtered before being used by the AVR monitoring transistor. As a result the machine has a short-circuit current capacity of 3 IN for 10 s, and good immunity to distortions generated by the load.

With **PMG** excitation, a permanent magnet generator (PMG) is added to the alternator. This is fitted at the rear of the machine and connected to the R 448 AVR. The PMG supplies the AVR with voltage which is independent of the main alternator winding. As a result the machine has a short-circuit current capacity of 3 IN for 10 s, and good immunity to distortions generated by the load.

The AVR monitors and corrects the alternator output voltage by adjusting the excitation current.

2.4.1 - R448 AVR characteristics

- shunt power supply: max 140V - 50/60 Hz
- rated overload current: 10A - 10s
- electronic protection (overload, voltage sensing opening short-circuit): excitation overload current for 10 s then return to approximately 1A.
The alternator must be stopped (or the power switched off, see section 3.5.3) in order to reset the protection.
- Fuse:
  - F1 on X1,X2.
- voltage sensing: 5 VA isolated via transformer
0-110 V terminals = 95 to 140 V
0-220 V terminals = 170 to 260 V
0-380 V terminals = 340 to 520 V
- voltage regulation ± 0.5%
- normal or rapid response time via ST2 jumper
- voltage adjustment via P2 potentiometer
other adaptation transformer voltages
- current sensing: (parallel operation):
C.T. 2.5 VA cl1, secondary 1A (optional)
- quadrature droop adjustment via potentiometer P1
- underspeed protection (U/f) and LAM: frequency threshold
adjustable via potentiometer P4
- max. excitation current adjustment via P5: 4 to 10A
- 50/60 Hz selection via ST3 jumper

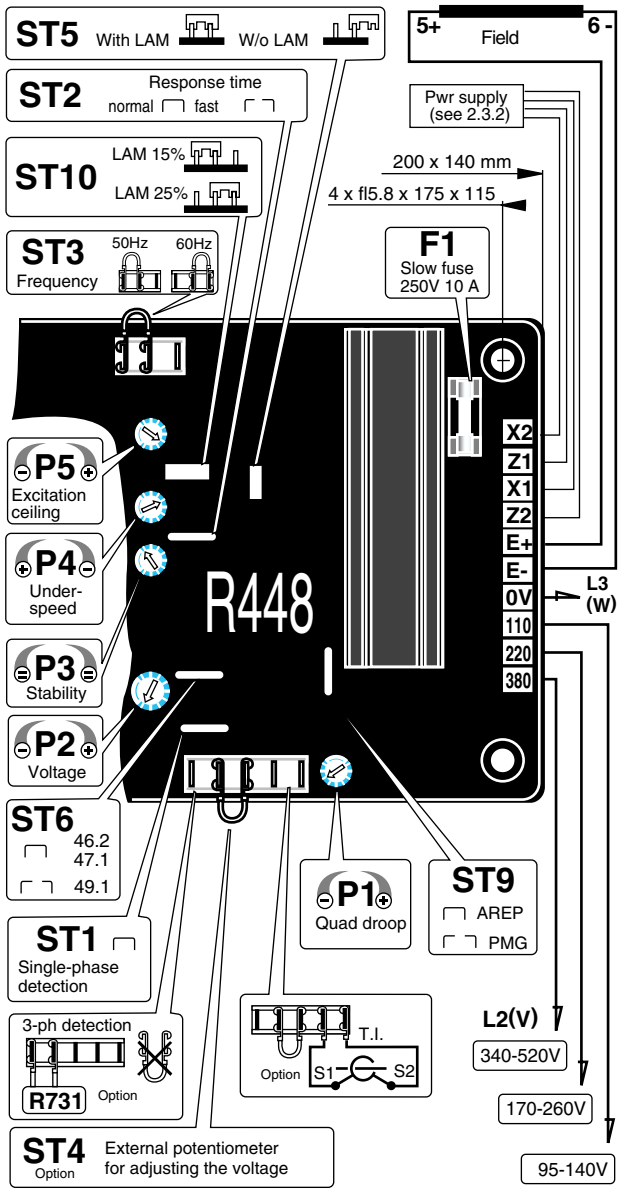

2.4.2 - R 448 power supply connection

AREP excitation

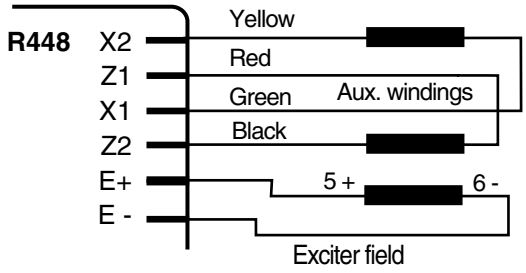

LSA 47.2 - 4 POLES
ALTERNATORS
TECHNICAL CHARACTERISTICS

PMG excitation

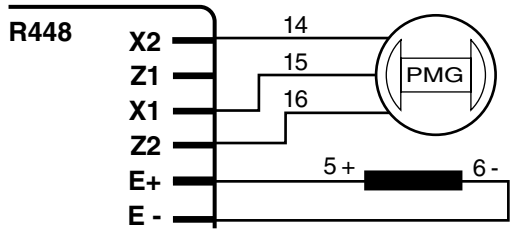

2.4.3 - Frequency compared with voltage (without LAM)

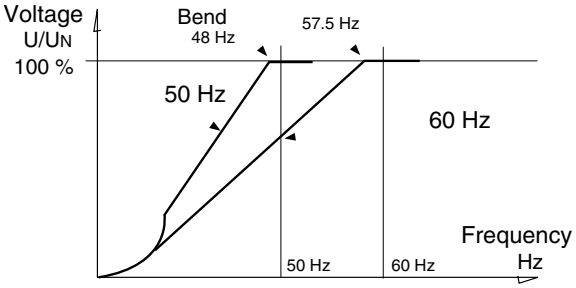

2.4.4 - LAM characteristics

The LAM system is integrated in the regulator and is active as standard (ST5 with bridge). It can be deactivated by removing the ST5 bridge.
The LAM can be adjusted to 15% or 25% by means of the ST10 jumper.
- Role of the “LAM” (Load Adjustment Module):
On application of a load, the rotation speed of the generator set decreases. When it passes below the preset frequency threshold, the LAM causes the voltage to drop by approximately 15% or 25% and consequently the amount of active load applied is reduced by approximately 25% to 45%, until the speed reaches its rated value again.
Hence the LAM can be used either to reduce the speed variation (frequency) and its duration for a given applied load, or to increase the applied load possible for one speed variation (turbo-charged engine).
To avoid voltage oscillations, the trip threshold for the LAM function should be set approximately 2 Hz below the lowest frequency in steady state.
Use of the LAM at 25% is recommended for load impacts ≥ 70% of the genset rated power.

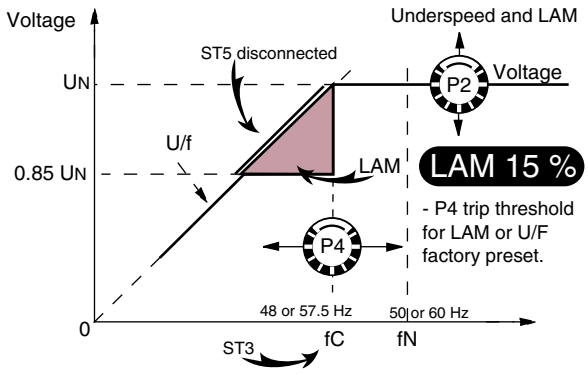

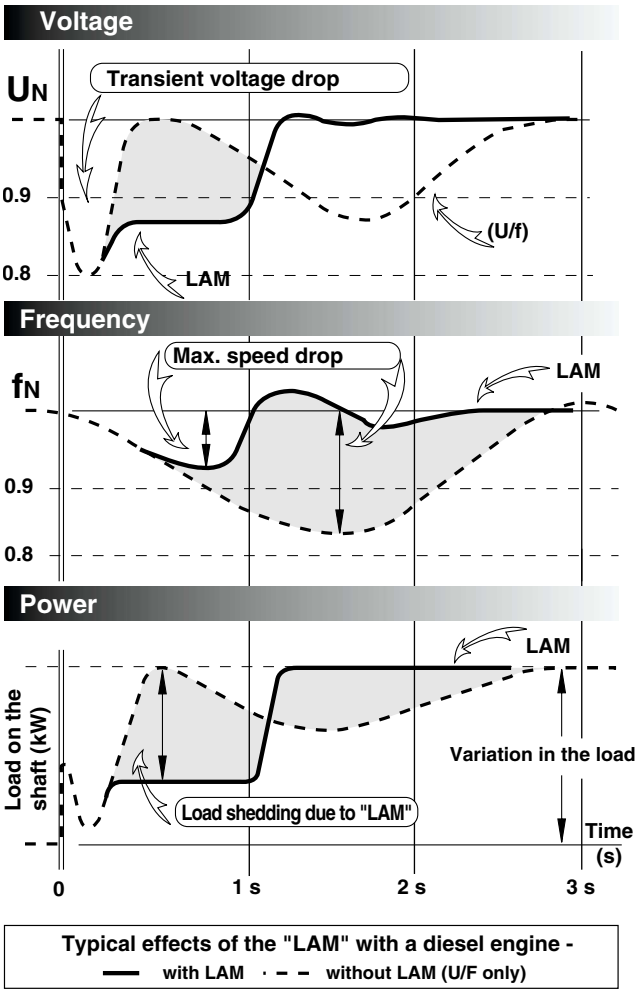

Typical effects of the "LAM" with a diesel engine -
with LAM — without LAM (U/F only) - - -

2.4.5 - R 448 AVR options

- Current transformer for parallel operation
of ...../1 A - 2.5 VA CL 1 (See the diagram included with this manual).
- Rhe remote voltage adjustment potentiometer:
470 Ω, 3 W min: adjustment range ± 5% (range limited by internal voltage potentiometer P2). Remove ST4 to connect the potentiometer. (A 1 k Ω potentiometer can also be used to extend the adjustment range to ± 10%).
- R 731 module: detection of 200 to 500V 3-phase voltage, compatible with parallel operation. Disconnect ST1 to connect the module; set the voltage via the module potentiometer.
- R 726 module: regulation system changed to "4-function". (See the maintenance manual and connection diagram.)
- PF regulation φ (2F)
- voltage matching before paralleling (3 F)
- mains connection of alternators already running in parallel (4F)

The R 726 module is connected in place of ST4.

Katolight Service - Master Repair Manual - Page 1454

3 - INSTALLATION

3.1 - Assembly

All mechanical handling operations must be undertaken using approved equipment.
Whilst being handled, the machine should remain horizontal.

3.1.1 - Handling

The generously-sized lifting rings are for handling the alternator alone. They must not be used to lift the genset. Choose a hoisting system which respects the positioning of the rings.

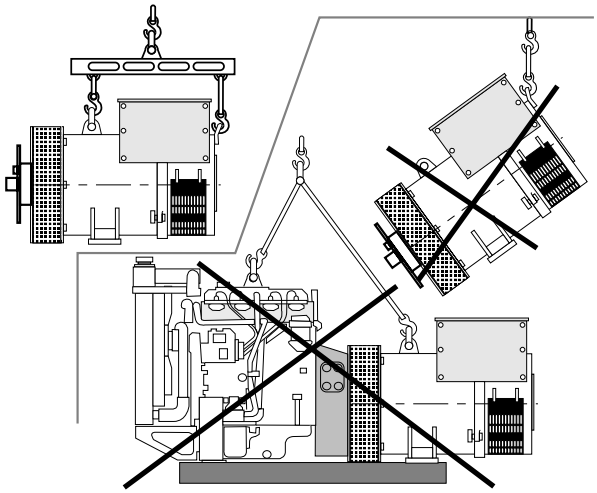

3.1.2 - Coupling

3.1.2.1 - single-bearing alternator
Before coupling the machines, check that they are compatible by:
- undertaking a torsional analysis of the transmission
- checking the dimensions of the flywheel and its housing, the flange, coupling discs and offset

WARNING

When coupling the alternator to the prime mover, do not use the fan to turn the alternator or rotor.
The holes of the coupling discs should be aligned with the flywheel holes by cranking the engine.
Check that the "O" ring seal and the preloading (wavy) washer are present in the NDE bearing seat.
Check that there is lateral play on the crankshaft.

3.1.2.2 - double-bearing alternator
- Semi-flexible coupling

Careful alignment of the machines is recommended, checking that the lack of concentricity and parallelism of both parts of the coupling do not exceed 0.1 mm.
This alternator has been balanced with a 1/2 key.

3.1.3 - Location

Ensure that the ambient temperature in the room where the alternator is placed cannot exceed 40°C for standard power ratings (for temperatures > 40°C, apply a derating coefficient). Fresh air, free from damp and dust, must be able to circulate freely around the air intake grilles on the opposite side from the coupling. It is essential to prevent not only the recycling of hot air from the machine or engine, but also exhaust fumes.

3.2 - Checks prior to first use

3.2.1 - Electrical checks

Under no circumstances should an alternator, new or otherwise, be operated if the insulation is less than 1 megohm for the stator and 100,000 ohms for the other windings.
There are three possible methods for restoring the above minimum values.
a) Dry out the machine for 24 hours in a drying oven at a temperature of 110 °C (without the regulator)
b) Blow hot air into the air intake, having made sure that the machine is rotating with the exciter field disconnected.
c) Run in short-circuit mode (disconnect the AVR):
- Short-circuit the three output power terminals using connections capable of supporting the rated current (try not to exceed 6 A/mm2)
- Insert a clamp ammeter to monitor the current passing through the short-circuit connections.
- Connect a 24 Volt battery in series with a rheostat of approximately 10 ohms (50 W) to the exciter field terminals, respecting the polarity.
- Open fully all the alternator openings.
- Run the alternator at its rated speed, and adjust the exciter field current using the rheostat to obtain the rated output current in the short-circuit connections.

Note: Prolonged standstill: In order to avoid these problems, we recommend the use of space heaters, as well as turning over the machine from time to time. Space heaters are only really effective if they are working continuously while the machine is stopped.

3.2.2 - Mechanical checks

Before starting the machine for the first time, check that:
- all fixing bolts and screws are tight
- the cooling air is drawn in freely
- the protective grilles and housing are correctly in place
- the standard direction of rotation is clockwise as seen from the shaft end (phase rotation in order 1 - 2 - 3).

For anti-clockwise rotation, swap 2 and 3.
- the winding connection corresponds to the site operating voltage (see section 3.3)

LSA 47.2 - 4 POLES
ALTERNATORS
INSTALLATION

3.3 - Terminal connection diagrams

To modify the connection, change the position of the stator cables on the terminals. The winding code is specified on the nameplate.

3.3.1 - Terminal connection: 12 wire

The connection accessories are detailed in section 5.3.3.

Any intervention on the alternator terminals during reconnection or checks should be performed with the machine stopped.

Connection codes	Voltage L.L			Factory connection
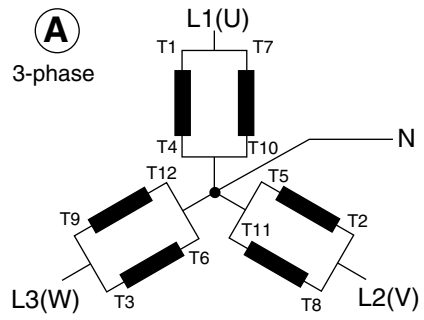	Winding	50 Hz	60 Hz	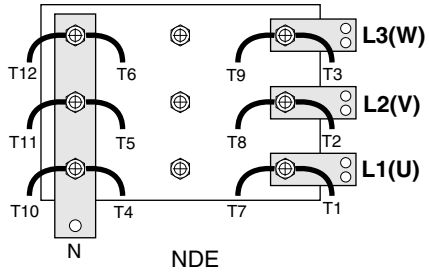
	6	190 - 208	190 - 240	
	7	220	-	
	8	-	190 - 208	
	R 230 voltage sensing: 0 => (T8) / 110 V => (T11) R 448 voltage sensing: 0 => (T3) / 220 V => (T2)			
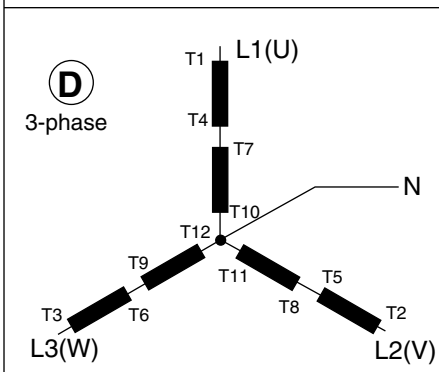	Winding	50 Hz	60 Hz	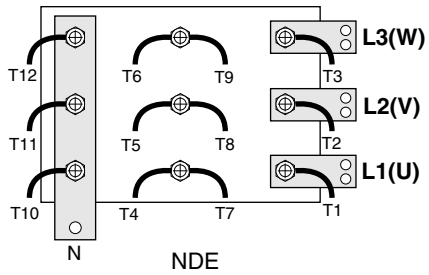
	6	380 - 415	380 - 480	
	7	440	-	
	8	-	380 - 416	
	R 230 voltage sensing: 0 => (T8) / 110 V => (T11) R 448 voltage sensing: 0 => (T3) / 380 V => (T2)			
	9	-	600	
	Winding 9: R 448 voltage sensing + transformer (Diagram on request)			
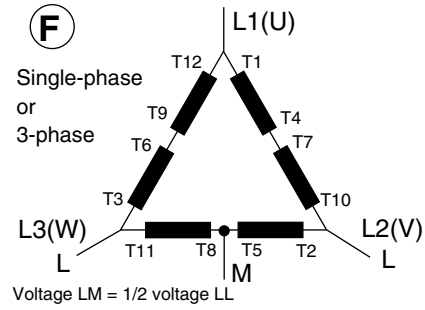	Winding	50 Hz	60 Hz	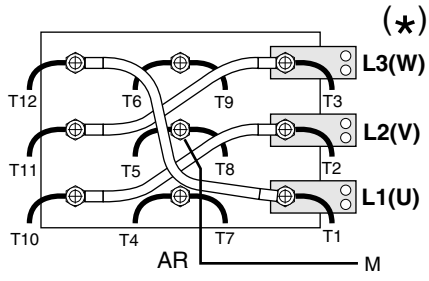
	6	220 - 240	220 - 240	
	7	240 - 254	-	
	8	-	220 - 240	
	R 230 voltage sensing: 0 => (T8) / 110 V => (T11) R 448 voltage sensing: 0 => (T3) / 220 V => (T2)			Operating phases L2 (V), L3 (W) single phase

In case of reconnection, ensure that AVR voltage sensing is correct!
The factory can supply a set of flexible shunts and special connection links as an option for making these connections (*).

Katolight Service - Master Repair Manual - Page 1456

LSA 47.2 - 4 POLES
ALTERNATORS
INSTALLATION

3.3.2 - Terminal connection: 6 wire

(not possible with the R 230)

Connection codes

D 3-phase

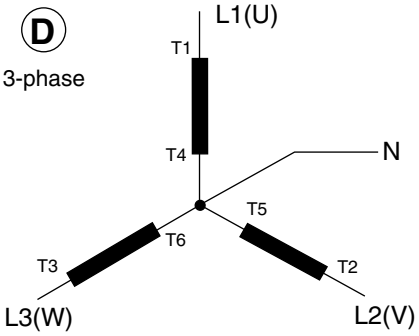

Voltage L.L

Winding	50 Hz	60 Hz
6S	380 - 415	380 - 480
7S	440	-
8S	-	380 - 416

⚠ R 448 voltage sensing:
0 => (T3) / 380 V => (T2)

9S	-	600

Winding 9: R 448 voltage sensing + transformer (Diagram on request)

Factory connection

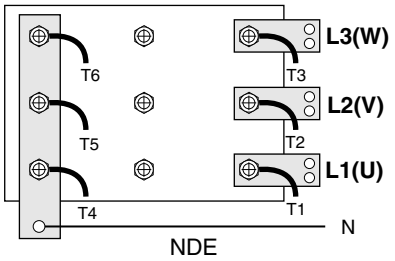

F Single-phase or 3-phase

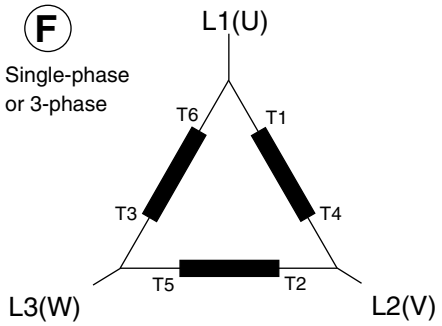

Winding	50 Hz	60 Hz
6S	220 - 240	220 - 277
7S	240 - 254	-
8S	-	220 - 240

⚠ R 448 voltage sensing:
0 => (T3) / 220 V => (T2)

Operating phases: L2 (V), L3 (W) single phase

(*)

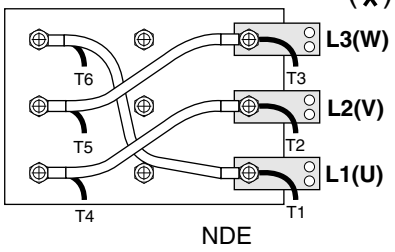

⚠ **In case of reconnection, ensure that AVR voltage sensing is correct!**
The factory can supply a set of flexible shunts and special connection links as an option for making these connections (*).

3.3.3 - Option connection diagram

A standard alternator is fitted with 3 starting ranges, 1 neutral connection link.

R 791 T Interference suppression kit (standard for CE marking)

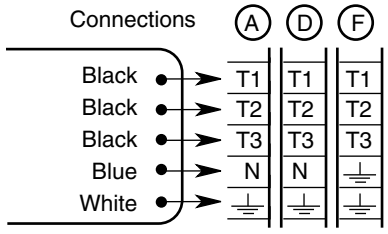

Remote voltage potentiometer

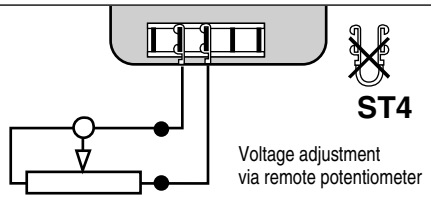

LSA 47.2 - 4 POLES
ALTERNATORS
INSTALLATION

Current transformer connection

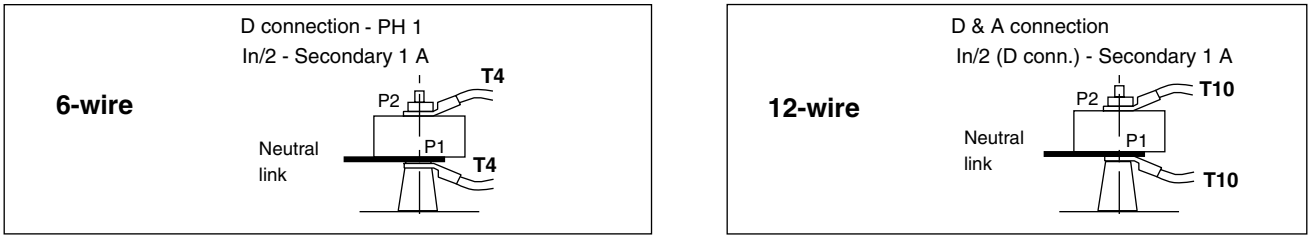

Space heater

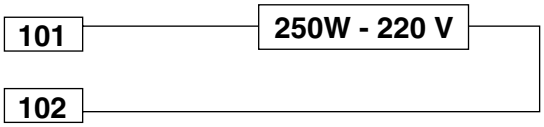

PTC stator temperature sensors

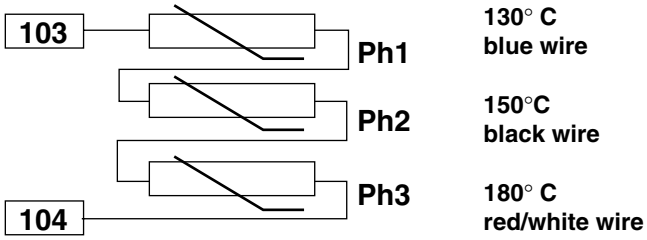

3.3.4 - Connection checks



Electrical installations must comply with the current legislation in force in the country of use.
Check that:
- The residual circuit-breaker conforms to legislation on protection of personnel, in force in the country of use, and has been correctly installed on the alternator power output as close as possible to the alternator. (In this case, disconnect the wire of the interference suppression module linking the neutral).
- Any protection devices in place have not been tripped.
- If there is an external AVR, the connections between the alternator and the cabinet are made in accordance with the connection diagram.
- There is no short-circuit phase-phase or phase-neutral between the alternator output terminals and the generator set control cabinet (part of the circuit not protected by circuit-breakers or relays in the cabinet).
- The machine should be connected with the busbar separating the terminals as shown in the terminal connection diagram.

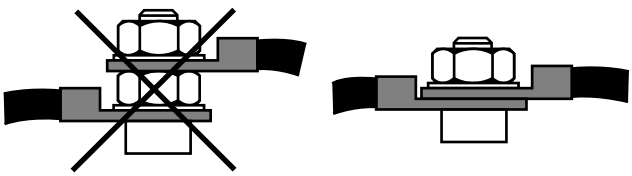

3.3.5 - Electrical checks on the AVR

- Check that all connections have been made properly as shown in the attached wiring diagram.
- Check that the ST3 frequency selection jumper is on the correct frequency setting.
- Check whether the ST4 jumper or the remote adjustment potentiometer have been connected.
- Optional operating modes
  • ST1 jumper: open circuit to connect the R 731 3-phase sensing module.
  • ST2 jumper: open circuit for rapid response time
  • ST5 jumper: open to suppress the LAM function.

3.4 - Commissioning



The machine can only be started up and used if the installation is in accordance with the regulations and instructions defined in this manual.
The machine is tested and set up at the factory. When first used with no load, make sure that the drive speed is correct and stable (see the nameplate). With the regreasable bearing option, we recommend greasing the bearings at the time of commissioning (see 4.2.3).
On application of the load, the machine should achieve its rated speed and voltage; however, in the event of abnormal operation, the machine setting can be altered (follow the adjustment procedure in section 3.5). If the machine still operates incorrectly, the cause of the malfunction must be located (see section 4.4).

Katolight Service - Master Repair Manual - Page 1458

LSA 47.2 - 4 POLES
ALTERNATORS
INSTALLATION

3.5 - Setting up

The various adjustments during tests must be made by a qualified engineer.

WARNING

Ensure that the drive speed specified on the nameplate is reached before commencing adjustment

1500 min^{-1}/50Hz or 1800 min^{-1}/60 Hz.

Do not try to set the voltage if the frequency or speed is not correct (risk of irreparable rotor damage).
The AVR is used to make any adjustments to the machine.

After operational testing, replace all access panels or covers.

3.5.1 - R 230 settings

Shunt excitation system

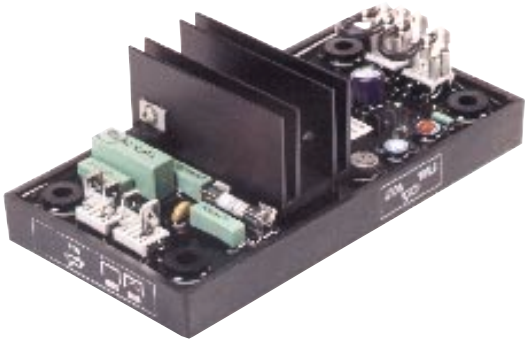

Initial potentiometer settings
- **P1** potentiometer (AVR voltage adjustment): fully anti-clockwise
- Remote voltage adjustment potentiometer: centre position
Run the alternator at its rated speed. If the voltage does not increase, the magnetic circuit should be remagnetized (see section 4.5)
- Turn the AVR voltage adjustment potentiometer **P1** slowly until the output voltage rated value is obtained
- Adjust the stability setting using **P2**
- Sealed potentiometer **P3** is factory set at 48 Hz for 50 Hz and 57.5 Hz for 60 Hz

3.5.2 - R 448 settings

SHUNT, AREP or PMG excitation system

WARNING

Before any intervention on the AVR, make sure that the ST9 jumper is closed with AREP excitation and open circuit with PMG excitation.

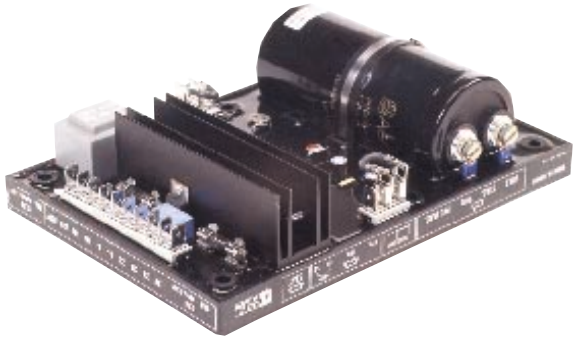

a) Initial potentiometer settings (see table below)
- Remote voltage adjustment potentiometer: centre (ST4 jumper removed).

Action	Factory setting	Pot.
Voltage minimum fully anti-clockwise	400V - 50 Hz (Input 0 - 380 V)	
Stability	Not set (centre position)	
Threshold/LAM or U/F Underspeed protection and "LAM" trip threshold Maximum frequency fully anti-clockwise	Potentiometer factory sealed If ST3 = 50 Hz (factory) = 48 Hz If ST3 = 60 Hz (factory) = 58 Hz	
Voltage quadrature droop (// operation with C.T.) - 0 quadrature droop fully anti-clockwise.	Not set (fully anti-clockwise)	
Excitation ceiling Limit of excitation and short-circuit current, minimum fully anti-clockwise	10 A maximum	

Adjustments in standalone operation

b) Install a D.C. analogue voltmeter (needle dial) cal. 100V on terminals E+, E- and an A.C. voltmeter cal 300 - 500 or 1000V on the alternator output terminals.

c) Make sure that the ST3 jumper is positioned on the desired frequency (50 or 60 Hz).

d) Voltage potentiometer P2 at minimum, fully anti-clockwise.

e) Turn the V/Hz potentiometer P4 fully clockwise.

Katolight Service - Master Repair Manual - Page 1459

f) Turn the stability potentiometer P3 anti-clockwise to 2 marks away from the central position.

g) Start the engine and set its speed to a frequency of 48 Hz for 50 Hz, or 58 for 60 Hz.

h) Set the output voltage to the desired value using P2.
- Rated voltage UN for solo operation (eg. 400 V)
- Or UN + 2 to 4% for parallel operation with C.T. (eg. 410 V -)

If the voltage oscillates, use P3 to make adjustments (try both directions) observing the voltage between E+ and E- (approx. 10V D.C.). The best response times are obtained at the limit of the instability. If no stable position can be obtained, try disconnecting or replacing the ST2 jumper (normal/fast).

i) Check LAM operation: ST5 closed.

j) Turn potentiometer P4 slowly anti-clockwise until there is a significant voltage drop (approximately 15%)

k) Vary the frequency (speed) around 48 or 58 Hz according to the operating frequency, and check the change in voltage from that observed previously (approximately 15%).

l) Readjust the speed of the unit to its rated no-load value.

Adjustments in parallel operation

WARNING

Before any intervention on the alternator, make sure that the speed droop is identical for all engines.

m) Preset for parallel operation (with C.T. connected to S1, S2 on connector J2)
- Potentiometer P1 (quadrature droop) in centre position.
Apply the rated load (cos Ø = 0.8 inductive).
The voltage should drop by 2 to 3%. If it increases, swap the 2 incoming wires of the C.T. secondary.

n) The no-load voltages should be identical for all the alternators intended to run in parallel.
- Couple the machines in parallel
- By adjusting the speed, try to obtain 0 KW power exchange.
- By altering the voltage setting P2 or Rhe on one of the machines, try to cancel (or minimise) the current circulating between the machines.

From now on, do not touch the voltage settings.
o) Apply the available load (the setting is only correct if a reactive load is available)
- By altering the speed, match the KW (or divide the rated power of the units proportionally)
- By altering the quadrature droop potentiometer P1, match or divide the currents.

3.5.3 - Max. excitation setting (excitation ceiling)

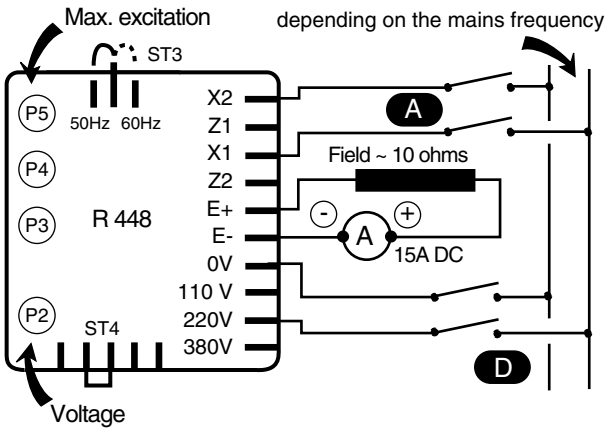

Adjustment of the current limit
via potentiometer P5 (fuse rating: 8A-10 seconds).
The maximum factory setting corresponds to that of the excitation current required to obtain a 3-phase short-circuit current of approximately 3 IN at 50 Hz for industrial power, unless otherwise specified(*).
A static method can be used to reduce this value or adapt the Isc to the actual operating power (derated machine), which is safer for the alternator and the installation. Disconnect power supply wires X1,X2 and Z1,Z2 and the voltage reference (0-110V-220V-380V) from the alternator.
Connect the mains power supply (200-240V) as indicated (X1,X2). Install a 10A D.C. ammeter in series with the exciter field. Turn P5 fully anti-clockwise and activate the power supply. If there is no output current from the AVR, turn potentiometer P2 (voltage) clockwise until the ammeter indicates a stable current. Switch the power supply off, then on again, turn P5 clockwise until the required max. current is obtained (no more than 10 A).

Checking the internal protection:

Open switch (D): the excitation current should increase to its preset ceiling, remain at that level for ≥ 10 seconds and then drop to < 1A.
To reset, switch off the power supply by opening switch (A).
Note: After setting the excitation ceiling as described, adjust the voltage again (see section 3.5.2.) via P2.
(*): In some countries it is a legal requirement to have a short-circuit current, so as to offer discriminating protection.

Katolight Service - Master Repair Manual - Page 1460

3.5.4 - Special type of use

- Field weakening

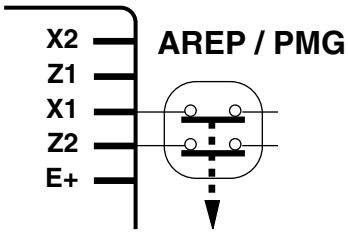

The exciter is switched off by disconnecting the AVR power supply (1 wire on each auxiliary winding); contact rating: 16 A - 250V A.C.
Connection is identical for resetting the AVR internal protection.

- Field forcing

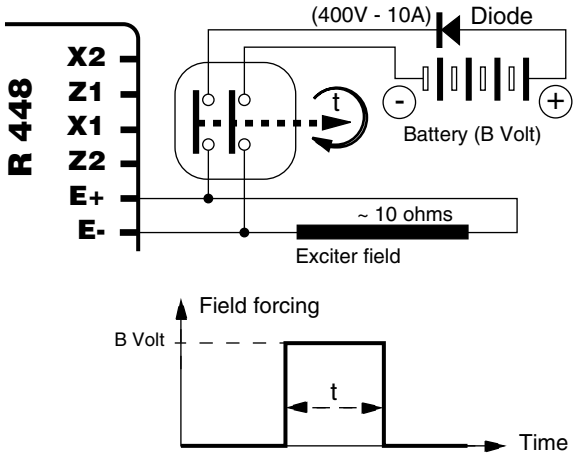

Applications	B volts	Time t
Guaranteed voltage build-up	12 (1A)	1 -2 s
Parallel operation, de-energized	12 (1A)	1 -2 s
Parallel operation, at standstill	24 (2A)	5 - 10 s
Frequency starting	48 (4A)	5 - 10 s
Sustained voltage on overload	48 (4A)	5 - 10 s

4 - SERVICING - MAINTENANCE

4.1 - Safety measures



Servicing or troubleshooting must be carried out strictly in accordance with instructions so as to avoid the risk of accidents and to maintain the machine in its original state.



All such operations performed on the alternator should be undertaken by personnel trained in the commissioning, servicing and maintenance of electrical and mechanical components.

Before any intervention on the machine, ensure that it cannot be started by a manual or automatic system and that you have understood the operating principles of the system.

4.2 - Routine maintenance

4.2.1 - Checks after start-up

After approximately 20 hours of operation, check that all fixing screws on the machine are still tight, plus the general state of the machine and the various electrical connections in the installation.

4.2.2 - Cooling circuit

It is advisable to check that circulation of air is not reduced by partial blocking of the air intake and outlet grilles: mud, fibre, grease, etc.

4.2.3 - Bearings

The bearings are regreasable (option). It is advisable to lubricate the machine during operation. Time intervals and quantity of grease are given in the table below.

NDE/DE bearing	6318 C3	6315 C3
Quantity of grease	41 g	30 g
Regreasing interval	3500 hrs	4500 hrs

Lubrication intervals are given for grease type
LITHIUM - standard - NLGI 3.
In the factory, the grease used for lubrication is:
SHELL - ALVANIA G3.
Before using another grease, check for compatibility with the original one. Monitor the temperature rise in the bearings, which should not exceed 50°C above the ambient temperature. Should this value be exceeded, the machine must be stopped and checks carried out.

4.2.4 - Electrical servicing

Cleaning product for the windings



Do not use: trichlorethylene, perchlorethylene, trichloroethane or any alkaline products.

Certain strictly defined pure volatile degreasing agents can be used, such as:
- Normal petrol (without additives)
- Toluene (slightly toxic); inflammable
- Benzene (or benzine, toxic); inflammable
- Ciclohexare (non toxic); inflammable

Cleaning of the stator, rotor, exciter and diode bridge
The insulating components and the impregnation system are not at risk of damage from solvents (see the above list of authorised products).
Avoid letting the cleaning product run into the slots. Apply the product with a brush, sponging frequently to avoid accumulation in the housing. Dry the winding with a dry cloth. Let any traces evaporate before reassembling the machine.

4.2.5 - Mechanical servicing



Cleaning the machine using water or a high-pressure washer is strictly prohibited.
Any problems arising from such treatment are not covered by our warranty.

Degreasing: Use a brush and detergent (suitable for paintwork).
Dusting: Use an air gun.
If filters have been added to the machine after manufacture and do not have thermal protection, the service personnel should clean the air filters periodically and systematically, as often as is necessary (every day in very dusty atmospheres).
The filter cant be cleaned with air gun in case of dry dust.
The filter must be changed in case of greasy dust.
After cleaning the alternator, it is essential to check the winding insulation (see sections 3.2 and 4.8).

4.3 - Fault detection

If, when commissioned, the alternator does not work normally, the source of the malfunction must be identified.
To do this, check that:
- the protection devices are fitted correctly
- the connections comply with the diagrams in the manuals supplied with the machine
- the speed of the unit is correct (see section 1.3)

Repeat the operations defined in section 3.

4.4 - Mechanical defects

Fault		Action
Bearing	Excessive temperature rise in one or both bearings (bearing temperature more than 80 °C) with or without abnormal bearing noise.	- If the bearing has turned blue or if the grease has turned black, change the bearing. - Bearing not fully locked (abnormal play in the bearing cage). - Check the end shield alignment (flange not properly fitted).
Abnormal temperature	Excessive temperature rise in the alternator housing (more than 40° C above the ambient temperature)	- Air flow (intake-outlet) partially clogged or hot air is being recycled from the alternator or engine - Alternator operating at too high a voltage (> 105% of Un on load) - Alternator overloaded
Vibration	Excessive vibration	- Misalignment (coupling) - Defective mounting or play in coupling - Rotor balancing fault (Engine - Alternator)
	Excessive vibration and humming noise coming from the machine	- Phase imbalance - Stator short-circuit
Abnormal noise	Alternator damaged by a significant impact, followed by humming and vibration	- System short-circuit - Mis-paralleling Possible consequences: - Broken or damaged coupling - Broken or bent shaft extension. - Shifting and short-circuit of revolving field winding. - Fan fractured or coming loose on shaft. - Irreparable damage to rotating diodes or AVR.

4.5 - Electrical faults

Fault	Action	Effect	Check/Cause
No voltage at no load on start-up	Connect a new battery of 4 to 12 volts to terminals E- and E+, respecting the polarity, for 2 to 3 seconds	The alternator builds up and its voltage is still correct when the battery is removed.	- Lack of residual magnetism
		The alternator builds up but its voltage does not reach the rated value when the battery is removed.	- Check the connection of the voltage reference to the AVR - Faulty diodes - Armature short-circuit
		The alternator builds up but its voltage disappears when the battery is removed	- Faulty AVR - Field windings open circuit (check winding) - Revolving field coil open circuit (check the resistance)
Voltage too low	Check the drive speed	Correct speed	Check the AVR connections (AVR may be faulty) - Field windings short-circuited - Rotating diodes burnt out - Revolving field coil short-circuited - Check the resistance
		Speed too low	Increase the drive speed (Do not touch the AVR voltage pot. (P2) before running at the correct speed).
Voltage too high	Adjust AVR voltage potentiometer	Adjustment ineffective	Faulty AVR
Voltage oscillations	Adjust the AVR stability potentiometer	If no effect: try normal or fast stability modes (ST2)	- Check the speed: possibility of cyclic irregularity - Loose connections - Faulty AVR - Speed too low when on load (or LAM set too high)
Voltage correct at no load and too low when on load	Run at no load and check the voltage between E+ and E- on the AVR	Voltage between E+ and E- (DC) SHUNT/AREP/PMG < 10V	- Check the speed (or LAM set too high)
		Voltage between E+ and E- SHUNT/AREP/PMG > 15V	- Faulty rotating diodes - Short-circuit in the revolving field coil. Check the resistance - Faulty exciter armature. Check the resistance.
Voltage disappears during operation	Check the AVR, the surge suppressor, the rotating diodes, and replace any defective components	The voltage does not return to the rated value	- Exciter winding open circuit - Faulty exciter armature - Faulty AVR - Revolving field coil open circuit or short-circuited

Katolight Service - Master Repair Manual - Page 1464

4.5.1 - Checking the winding

You can check the winding insulation by performing a high voltage test. In this case, you must disconnect all AVR wires.

WARNING

Damage caused to the AVR in such conditions is not covered by our warranty.



After operational testing, replace all access panels or covers.

4.5.2 - Checking the diode bridge

A diode in good working order should allow the current to flow only in the anode-to-cathode direction

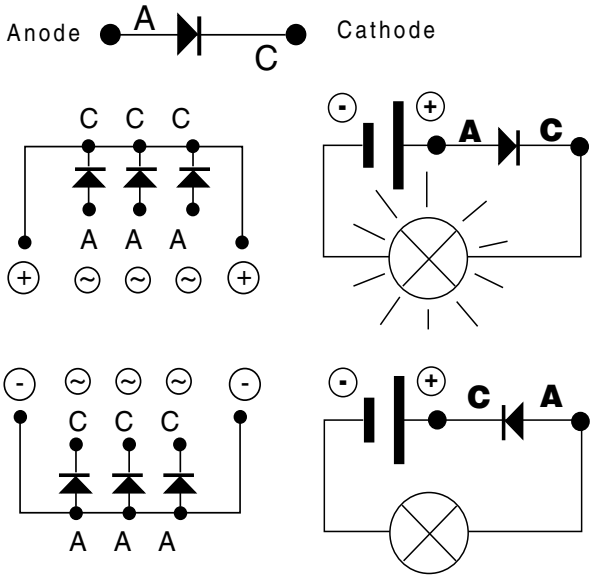

4.5.3 - Checking the windings and rotating diodes using separate excitation



During this procedure, make sure that the alternator is disconnected from any external load and inspect the terminal box to check that the connections are fully tightened.

1) Stop the unit, disconnect and isolate the AVR wires.
2) There are two ways of creating an assembly with separate excitation.

Assembly A: Connect a 12 V battery in series with a rheostat of approximately 50 ohms - 300 W and a diode on both exciter field wires (5+) and (6-).

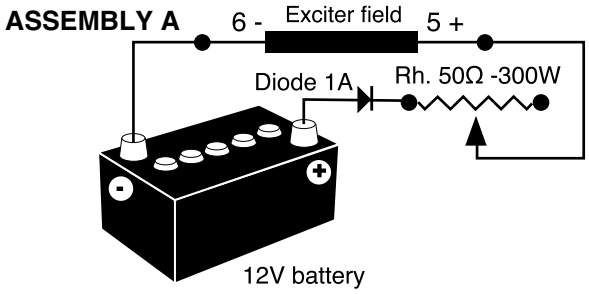

Assembly B: Connect a "Variac" variable power supply and a diode bridge on both exciter field wires (5+) and (6-).
Both these systems should have characteristics which are compatible with the field excitation power of the machine (see the nameplate).
3) Run the unit at its rated speed.
4) Gradually increase the exciter field current by adjusting the rheostat or the variac and measure the output voltages on L1 - L2 - L3, checking the excitation voltage and current at no load and on load (see the machine nameplate or ask for the factory test report).
When the output voltage is at its rated value and balanced within 1% for the rated excitation level, the machine is in good working order. The fault therefore comes from the AVR or its associated wiring (ie. sensing, auxiliary windings).

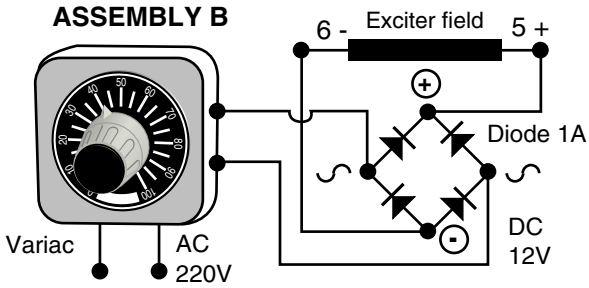

4.6 - Dismantling, reassembly (see sections 5.4.1 & 5.4.2)

WARNING

During the warranty period, this operation should only be carried out in an LEROY-SOMER approved workshop or in our factory, otherwise the warranty may be invalidated.
Whilst being handled, the machine should remain horizontal (rotor not locked in position).

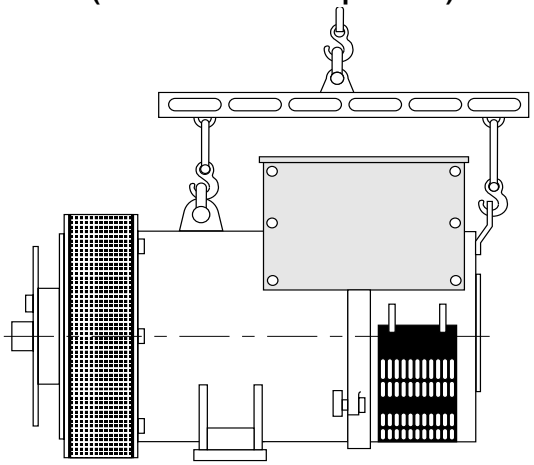

4.6.1 - Tools required

To fully dismantle the machine, we recommend using the tools listed below:
- 1 ratchet spanner + extension
- 1 torque wrench
- 1 set of flat spanners: 8 mm, 10 mm, 18 mm
- 1 socket set: 8, 10, 13, 16, 18, 21, 24, 30 mm
- 1 socket with male ferrule: 5 mm
- 1 puller

4.6.2 - Screw tightening torque

IDENTIFICATION	screw Ø	Torque N.m
Field screw	M 6	10
Diode nut	M 6	4
Flange/frame screw	M 12	69
NDE shield/frame screw	M 12	69
Disc/Sleeve screw	M 16	170
Earth screw	M 10	20
Grille screws	M 6	5
Cover screws	M 6	5
Terminal block nut	M 12	35
Earth screw	M 12	35

4.6.3 - Access to diodes

- Open the air intake grille (51).
- Disconnect the diodes.
- Check the 6 diodes using an ohmmeter or a battery lamp (see section 4.5.2).
If the diodes are faulty,
- Remove the surge suppressor (347).
- Remove the 6 "H" nuts for mounting the diode bridges on the support.
- Change the crescents, respecting the polarity.

4.6.4 - Access to connections and the regulation system

Access directly by removing the top of the cover (48) or the AVR access door (466).

4.6.5 - Replacing the NDE bearing

- Remove the air intake grille (51).
- Remove the lid of the protective cover (48) and the side panels (366) and (367).
- Remove the hook (21) and the cover rear panel (365).
- Replace the hook (21) in order to manipulate the flange.
- Disconnect the exciter wires (5+,6-).
If using a single-bearing or double-bearing machine with the regreasable bearing option:
- Remove the bearing thrust screws (78).
- Remove all 5 screws (37).
- Remove the shield (36).
- Take out the antifriction bearing (70) using a puller with a central screw (see drawing below).

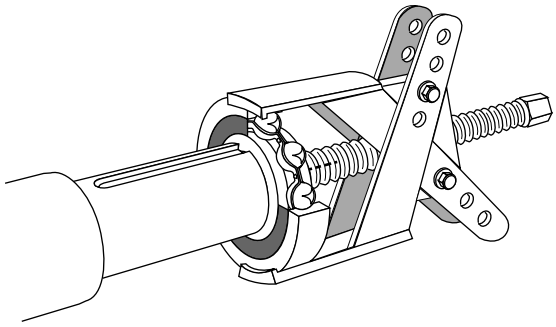

- Fit the new antifriction bearing onto the shaft after heating it by induction to approximately 80 °C.
- Mount the new preloading (wavy) washer (79) + the new “O” ring seal (349) in the shield (36).
If using a single-bearing or double-bearing machine with the regreasable bearing option:
- Screw a threaded rod into the thrust bearing (78).
- Refit the end shield on the machine using a dowel and nut in the shaft extension (see drawing).
- Slide the threaded rod into the shield hole to make it easier to assemble (see basic diagram).
- Fit the thrust bearing screws (78), remove the threaded rod, fit the other screw and tighten up the assembly.
- Tighten the 5 bearing screws (37).
- Reconnect exciter wires E+, E-.
- Finish reassembling the cover.

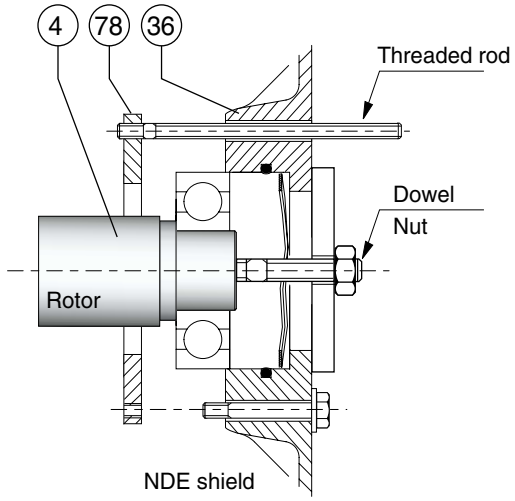

WARNING

When dismantling the shields, you will need to change the antifriction bearings, the "O" ring seal and the preloading (wavy) washer.

4.6.6 - Replacing the DE bearing

- Remove the air outlet grille (33).
- Remove the 6 screws (31) from the DE shield and the 4 screws (62) from the inner bearing retainer.
- Remove the shield (30).
- Take out the ball bearing (60) using a puller with a central screw (see section 4.6.5).
- Fit the new bearing, after heating it by induction to approximately 80 °C.
- Screw a threaded rod into the thrust bearing (68).
- Refit the shield (30) on the machine.
- Slide the threaded rod into the shield hole to make it easier to assemble (see basic diagram).
- Tighten the bottom thrust bearing screws (68), remove the threaded rod and fit the other screws.
- Tighten the 6 shield screws (31).
- Refit the air outlet grille (33).

WARNING

When dismantling the machine, always change the antifriction bearings.

4.6.7 - Dismantling the rotor assembly

- Remove the NDE shield (36) as described in section 4.6.5.
- Remove the DE shield (30) as described in section 4.6.6 if it is a double-bearing machine
- Support the DE rotor (4) with a strap or with a support constructed in accordance with the following drawing.
- Move the strap as the rotor moves in order to distribute the weight over it.

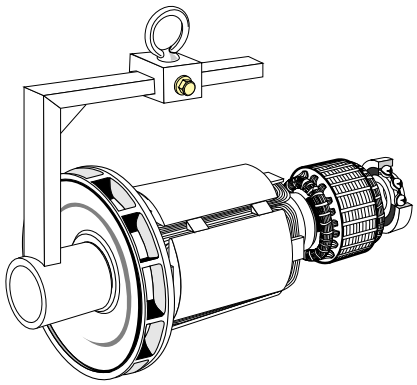

WARNING

When dismantling the rotor involves changing parts or rewinding, the rotor must be rebalanced.

4.6.8 - Reassembling the machine

- Mount the rotor (4) in the stator (1) (see drawing above) taking care not to knock the windings.

If using a single-bearing or double-bearing machine with the regreasable bearing option:

- Mount the new preloading (wavy) washer (79) + the new "O" ring seal (349) in the shield (36).

- Screw a threaded rod into the thrust bearing (78).

- Refit the shield (36) on the machine using a dowel and nut in the shaft extension (see diagram).

- Slide the threaded rod into the shield hole to make it easier to assemble (see diagram).

- Fit the thrust bearing screws (78), remove the threaded rod, fit the other screw and tighten up the assembly.

- Tighten the 5 bearing screws (37).
- Reconnect exciter wires E+, E-.
- Finish reassembling the cover.
- Refit the flange (30) on the stator (1).
- Tighten the screws (31).

If using a double-bearing machine:

- Mount the new preloading (wavy) washer (79) + the new "O" ring seal (349) in the shield (36).
- Refit the shield (36) on the machine using a dowel and nut in the shaft extension (see diagram).
- Tighten the 5 shield screws (37).
- Reconnect exciter wires E+, E-.
- Finish reassembling the cover.
- Screw a threaded rod into the thrust bearing (68).
- Refit the shield (30) on the machine.
- Slide the threaded rod into the shield hole to make it easier to assemble (see basic diagram).
- Fit the thrust bearing screws (68), remove the threaded rod, fit the other screw and tighten up the assembly.
- Tighten the 6 shield screws (31).
- Refit the air outlet grille (33).
- Check that the machine assembly is correctly mounted and that all screws are tightened.

4.6.9 - Dismantling and reassembly of the filters

- Remove the grille (417) then take out the filter (418). Change the filter if necessary; please refer to section 4.2.5 for cleaning the filter.
To replace, follow the instructions in reverse order.

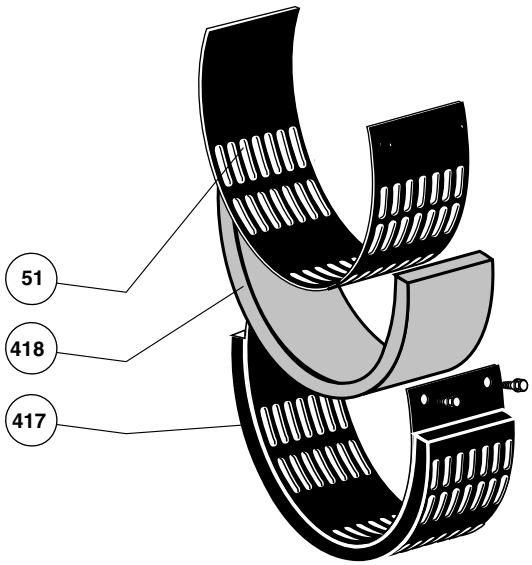

4.7 - Installation and maintenance of the PMG

For the LSA 47.2, the PMG reference is: PMG 2.

4.7.1 - Mechanical characteristics

The components are:
- a shaft adapter (to position the rotor on the alternator shaft).
- an M16 tie rod and nut for assembling the rotor on the shaft.
- a rotor with 16 magnets.
- an assembly of frame+wound stator+plastic connection sheath+plastic ferrules.
- the housing end plate (4 CBLXS M5 screws).
- 4 HM6 screws (for fixing the housing to the NDE shield).

If mounting in kit form, follow the instructions below.
1 - Remove the PMG cover [297] and the alternator NDE shield seal (71).
2 - Mount the PMG housing assembly [290] on the shield using the 4 HM6 screws.
3 - Apply anti-vibration adhesive to the tie rod [295] and tighten it in the alternator shaft extension tapped hole to a torque of 30 Nm.
4 - Mount the magnetised rotor on the shaft adapter, then using 2 M10 threaded rods screwed into the rotor, slide the assembly onto the tie rod.
5 - Once the rotor is in position, remove the 2 M10 rods.
6 - Install the cable gland washer [296].
7 - Lock the assembly with the M16 nut (torque of 116 Nm).
8 - Close the PMG with the cover [297].
9 - Remove the plastic plug on the NDE panel and fit the plastic sheath and its ferrule.
10 - Connect the PMG to the AVR (section 4.7.2).

4.7.2 - Electrical connection

- Connect the 3 PMG wires (14/15/16), the 2 exciter wires (5/6) and the above-mentioned 2 voltage sensing wires (2/3) according to the connection diagram (see section 2.3.2).
Mounting the PMG on an AREP machine:
- Connect the 3 PMG wires (14/15/16), to terminals X1,X2,Z2 on the AVR. The 4 auxiliary winding wires X1.X2.Z1.Z2 should be isolated according to the current rules and regulations. Both exciter field wires (5/6) and both voltage sensing wires (2/3) remain in place.

Electrical characteristics of the PMG 2:

Stator phase/phase resistance 20 °C: 2.1 Ω
No-load A.C. voltage between phases at 1500 rpm: 125 V.

WARNING

With the PMG, check that the ST9 jumper is open circuit.

After operational testing, replace all access panels or covers.

4.8 - Table of characteristics

Table of average values
Alternator - 4 poles - 50 Hz - Standard winding No. 6.
(400V for the excitation values)
The voltage and current values are given for no-load operation and operation at rated load with separate field excitation. All values are given to within ± 10% and may be changed without prior notification (for exact values, consult the test report).

4.8.1 - Average values for the LSA 47.2

Resistances at 20 °C (Ω)

LSA 47.2	L/N stator	Rotor	Field	Armature
VS2	0.0081	0.77	10.2	0.128
VS3	0.0081	0.77	10.2	0.128
S4	0.0063	0.88	10.2	0.128
S5	0.0063	0.88	10.2	0.128
M7	0.0045	0.98	10.2	0.128
M8	0.0047	1.03	10.2	0.128
L9	0.0039	1.1	10.2	0.128
LSA 47.2 6 wire				
L9	0.0039	1.1	10.2	0.128

Resistance of AREP auxiliary windings at 20 °C (Ω)

LSA 47.2	Auxil wdg: X1, X2	Auxil wdg: Z1, Z2
VS2	0.2	0.38
VS3	0.2	0.38
S4	0.195	0.40
S5	0.195	0.40
M7	0.165	0.33
M8	0.17	0.35
L9	0.168	0.34
LSA 47.2 6 wire		
L9	0.168	0.34

Field excitation current i exc (A)
Symbols: “i exc”: excitation current of the exciter field.

LSA 47.2	No load	At rated load
VS2	1	4
VS3	1	4
S4	0.9	3.4
S5	0.9	3.8
M7	1	3.65
M8	0.85	3.7
L9	0.95	3.75
LSA 47.2 6 wire		
L9	0,95	3.75

For 60 Hz machines, the “i exc” values are approximately 5 to 10% lower.

4.8.2 - Voltage of auxiliary windings at no load

LSA 47.2	Auxil wdg: X1, X2	Auxil wdg: Z1, Z2
50 Hz	70 V	10 V
60 Hz	85 V	12 V

5 - SPARE PARTS

5.1 - First maintenance parts

Emergency repair kits are available as an option.
They contain the following items:

Ref.	Description	Qty	LSA 47.2	Part ref
	Emergency kit	1		
198	AVR	1	R 230	**AEM 110 RE 001**
343	Diode bridge assembly	1	LSA 471. 9. 07 LSA 471.9.08	**ADE 471 EQ 007** **ADE 471 EQ 008**
347	Surge suppressor	1	LSA 461.9.01	**CII 111 PM 005**
	AVR fuse	2	250 V - 8 A	**PEL 008 FU 000**

Ref.	Description	Qty	LSA 47.2	Part ref
	Emergency kit	1		
198	AVR	1	R 448	**AEM 110 RE 005**
343	Diode bridge assembly	1	LSA 471. 9. 07 LSA 471.9.08	**ADE 471 EQ 007** **ADE 471 EQ 008**
347	Surge suppressor	1	LSA 461.9.01	**CII 111 PM 005**
	AVR fuse	2	250 V - 10 A	**PEL 010 FA 004**

	Other spare parts			
60	Drive end bearing	1	6318 2RS/C3	**RLT 090 TS030**
70	Non drive end bearing	1	6315 2RS/C3	**RLT 075 TS030**

5.2 - Technical support service

Our technical support service will be pleased to provide any additional information you may require.

When ordering spare parts, you should indicate the complete machine type, its serial number and the information given on the nameplate.

Address your enquiry to your usual contact.

Part numbers should be identified from the exploded views and their description from the parts list.
Our extensive network of service centres can dispatch the necessary parts without delay.
To ensure correct operation and the safety of our machines, we recommend the use of original manufacturer spare parts. In the event of failure to comply with this advice, the manufacturer cannot be held responsible for any damage.

5.3 - Accessories

5.3.1 - Space heater for use when stopped

The space heater must run as soon as the alternator stops. It is installed at the rear of the machine. Its standard power is 250W with 220V or 250W with 110V on request.



Warning: the power supply is present when the machine has stopped.

5.3.2 - Temperature sensors with thermistors (PTC)

These are thermistor triplets with a positive temperature coefficient installed in the stator winding (1 per phase). There can be a maximum of 2 triplets in the winding (at 2 levels: warning and trip) and 1 or 2 thermistors in the shields.
These sensors must be linked to adapted sensing relays (supplied optionally).
Cold resistance of cold thermistor sensors:
100 to 250 Ω per sensor.

5.3.3 - Connection accessories

- 6-wire machines

Requirements for coupling (F):
- 3 flexible shunts

- 12-wire machines

Requirements for coupling (F):
- 3 flexible shunts



After operational testing, replace all access panels or covers.

Katolight Service - Master Repair Manual - Page 1470

LSA 47.2 - 4 POLES
ALTERNATORS
SPARE PARTS

5.4 - Exploded view, parts list

5.4.1 - Single-bearing LSA 47.2

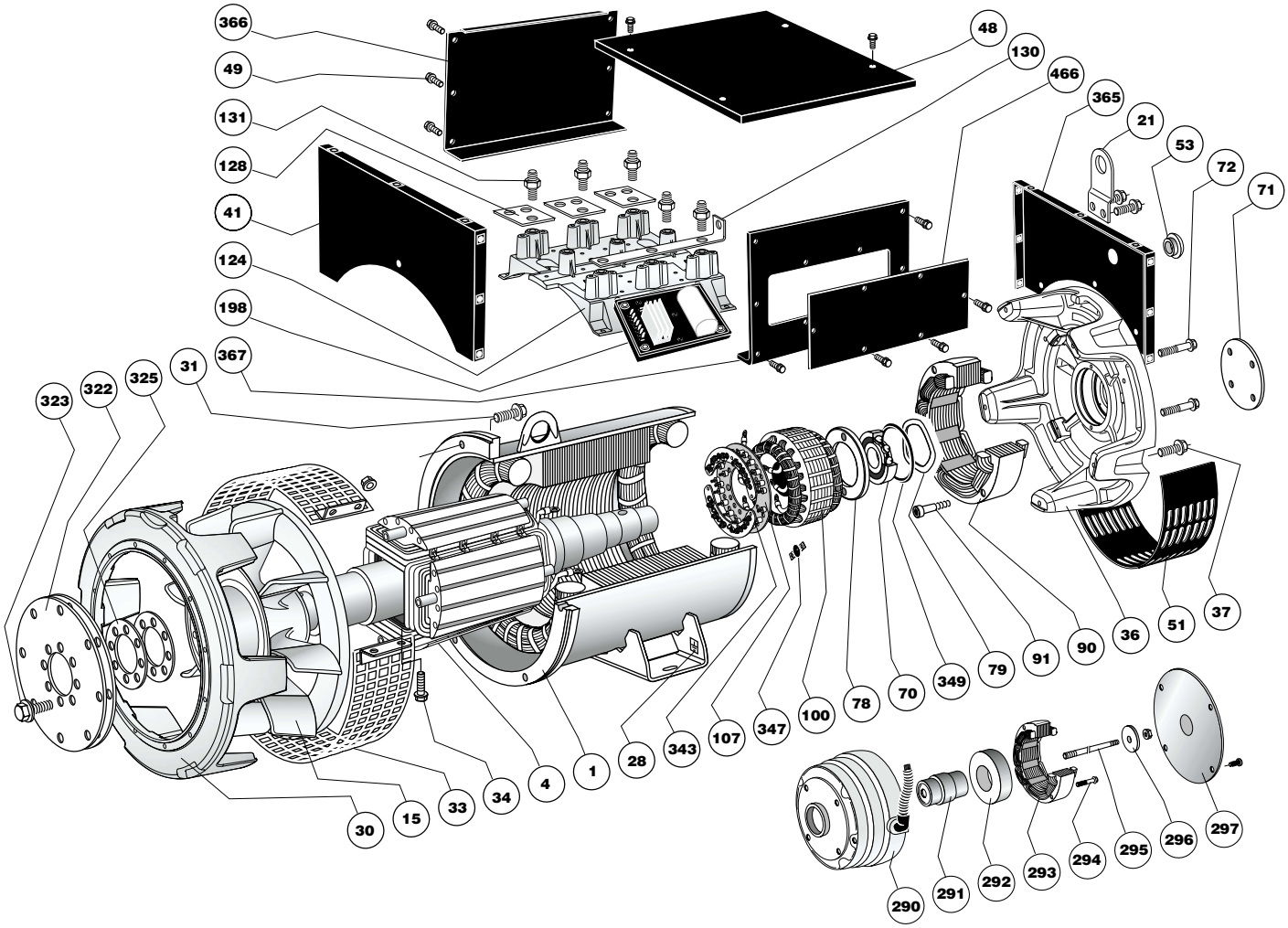

Ref.	Qty	Description	Ref.	Qty	Description
1	1	Stator assembly	107	1	Crescent support
4	1	Rotor assembly	124	1	Terminal block
15	1	Fan	128	3	Starting range
21	1	Lifting ring	130	1	Neutral link
28	1	Earth terminal	131	9	Terminal block terminal screws
30	1	DE flange	198	1	Voltage regulator (AVR)
31	6	Fixing screws	290	1	PMG housing
33	1	Protective grille	291	1	Shaft adapter
34	2	Fixing screws	292	1	Magnetic rotor
36	1	Exciter end shield	293	1	Stator
37	5	Fixing screws	294	2	Fixing screws
41	1	Cover front panel	295	1	Tie rod
48	1	Cover top panel	296	1	Cable gland washer + nut
49	-	Cover screws	297	1	End plate
51	1	Air intake grille	322	3	Coupling disc
53	1	Plug	323	8	Fixing screws
70	1	Non drive end bearing	325	-	Spacer shim
71	1	Cover	343	1	Diode bridge assembly
72	2	Fixing screws	347	1	Protection varistor (+ PCB)
78	1	Inner bearing retainer	349	1	"O" ring
79	1	Preloading (wavy) washer	365	1	Cover rear panel
90	1	Exciter field	366	1	Side panel
91	4	Fixing screws	367	1	Side panel with inspection door
100	1	Exciter armature	466	1	AVR inspection door

LSA 47.2 - 4 POLES
ALTERNATORS
SPARE PARTS

5.4.2 - Double-bearing LSA 47.2

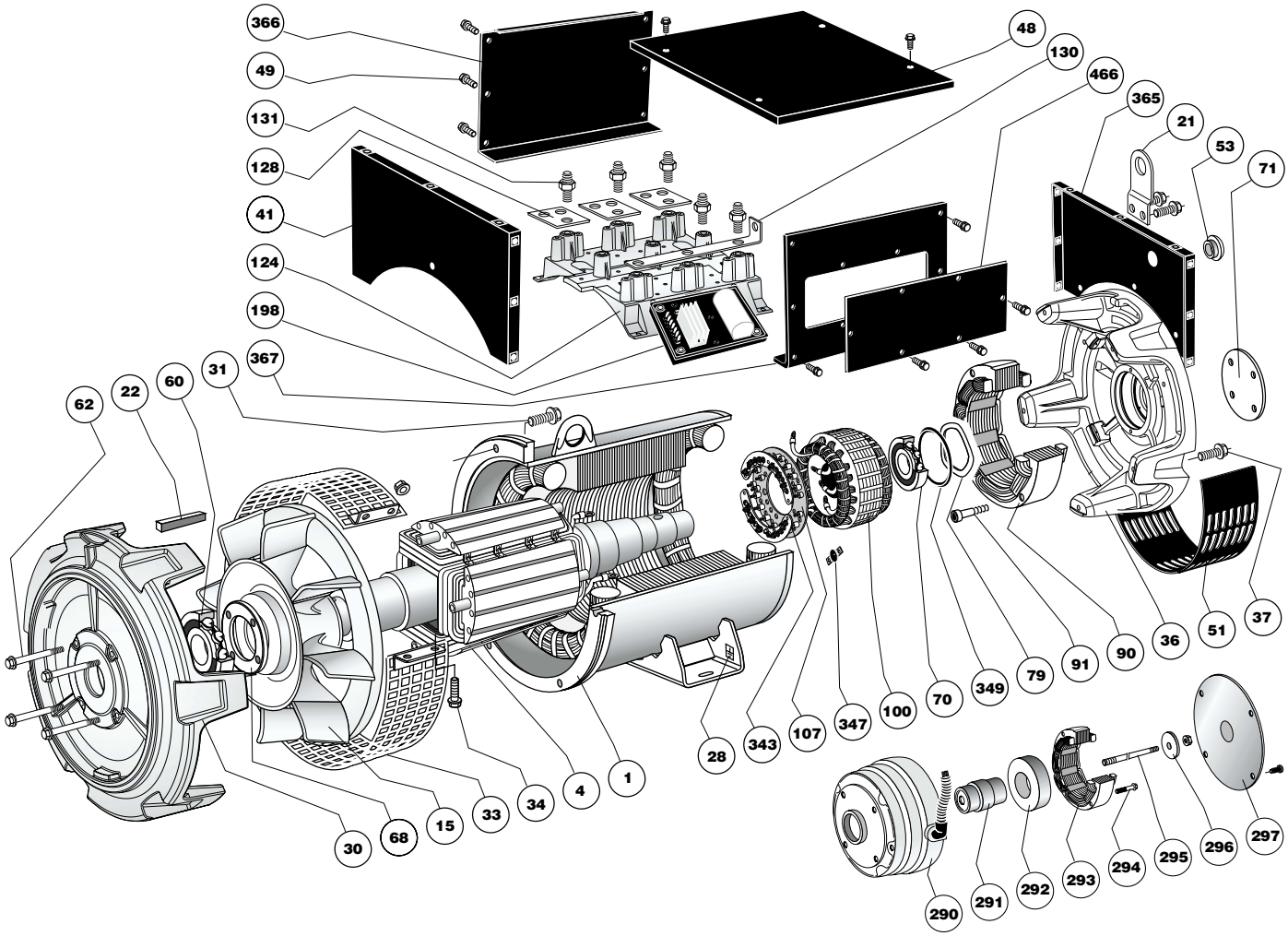

Ref.	Qty	Description	Ref.	Qty	Description
1	1	Stator assembly	100	1	Exciter armature
4	1	Rotor assembly	107	1	Crescent support
15	1	Fan	124	1	Terminal block
21	1	Lifting ring	128	3	Starting range
22	1	Shaft extension key	130	1	Neutral link
28	1	Earth terminal	131	9	Terminal block terminal screws
30	1	Drive end shield	198	1	Voltage regulator (AVR)
31	6	Fixing screws	290	1	PMG housing
33	1	Protective grille	291	1	Shaft adapter
34	2	Fixing screws	292	1	Magnetic rotor
36	1	Exciter end shield	293	1	Stator
37	5	Fixing screws	294	2	Fixing screws
41	1	Cover front panel	295	1	Tie rod
48	1	Cover top panel	296	1	Cable gland washer + nut
49	-	Cover screws	297	1	End plate
51	1	Air intake grille	343	1	Diode bridge assembly
53	1	Plug	347	1	Protection varistor (+ PCB)
60	1	Drive end bearing	349	1	"O" ring
62	4	Fixing screws	365	1	Cover rear panel
68	1	Inner bearing retainer	366	1	Side panel
70	1	Non drive end bearing	367	1	Side panel with inspection door
71	1	Cover	466	1	AVR inspection door
79	1	Preloading (wavy) washer			
90	1	Exciter field			
91	4	Fixing screws			

Katolight Service - Master Repair Manual - Page 1472

LSA 47.2 - 4 POLES
ALTERNATORS
SPARE PARTS

Katolight Service - Master Repair Manual - Page 1473



LEROY-SOMER 16015 ANGOULÊME CEDEX - FRANCE

RCS ANGOULÊME N° B 671 820 223
S.A. au capital de 62 779 000 €

www.leroy-somer.com

AC GENERATOR WARRANTY

GENERAL

Newage AVK SEG warrants any product of its manufacture to be free from defects in materials and workmanship for a period of time dependent upon service and application.

Stamford and Markon Generators are built in accordance with specific standards as indicated in our sales literature. Conformance with these standards on Newage's part requires that the products be used as intended and certain precautions be taken by the user and assembler.

AC Generators must be properly protected, ventilated, and mounted to ensure trouble-free running. The user should take precautions to ensure that the ingress of moisture, recirculating exhaust, dust, insects, rodents and debris are avoided. Coastal and marine installations require protection against salt-laden spray. Anti-condensation heaters must be installed where temperature differentials and relative humidity promote condensation. Electrical system protection must be properly selected, rated, installed and functioning.

Newage's warranty period does not extend beyond that offered by the original purchaser, and is voided by any resale to other than the first owner/user.

WARRANTY PERIODS

A. Emergency or Standby Duty

Standby generators must be permanently installed, properly enclosed and ventilated, and used as back up to the normal power source. Mobile or rental sets do not fit this category.

The warranty period is 24 months from the date of installation by the first owner/user, or 30 months after date of shipment by Newage, whichever is the shorter, or 1000 hours of operation, limited to a maximum of 500 hours per year, for 2 years, whichever is shorter.

B. Continuous or Prime Duty

Continuous or prime power service describes operation in a permanent or mobile application where no other source of power is generally available. Rental sets, and specific products for irrigation and refrigeration meet this criteria, irrespective of running hours. Cogeneration and peak shaving installations are considered prime power.

The warranty period is 12 months from date of start-up by the first owner/user, or 18 months after date of shipment by Newage, whichever is the shorter. Hours of operation are unrestricted, provided service is conducted as indicated in our Operation and Maintenance Manuals, and maintenance is performed per the manual.

CORRECTIVE ACTION

Warranty work can only be approved and initiated by Newage AVK SEG after receipt of the failure details by phone or fax. This will permit Newage AVK SEG to determine the best course of action. Newage will not participate in any claim where work has proceeded without prior knowledge being provided.

Newage AVK SEG will make good by repair, or, at its option, by replacement, any fault which, under proper use, appears in the goods within the warranty period and is found on examination by Newage or its appointed representative to be solely due to defective materials or workmanship. The defective part or parts must be promptly returned, prepaid with all identification numbers and marks intact to a Newage facility, representative, or, if appropriate, to the dealer who supplied the goods. Where such a course of action is impossible or inappropriate, Newage AVK SEG will accept a set of photographs from its appointed representative permitting a visual analysis of the failure prior to any corrective action.

The repaired or replacement part will be delivered prepaid the the first destination within the 48 contiguous states and Canadian provinces, free of charge. This warranty does not cover the removing/installing and defective/replacement equipment, nor any costs associated with equipment as manufactured by others that may be impacted by the defect.

CONSEQUENTIAL DAMAGE AND LIABILITY

Newage AVK SEG disclaims any liability for consequential damages (personal and property) from the buyer and its customers resulting from a defect within the warranty period. Newage's maximum liability will not exceed the purchase price of the Newage product purchased by the first buyer and shall be limited to repair, replacement, or refund.

Newage AVK SEG liability under this warranty shall be in lieu of any warranty on condition implied by law as to the quality or fitness for any particular purpose of the goods, and save as expressly provided in the warranty. Newage AVK SEG shall not be under any liability, whether in contract, tort or otherwise, with respect to defects in goods delivered, or for any injury, damage or loss resulting from such defects, or from any work done in connection therewith.

JUDGMENT

Newage AVK SEG judgment shall, in all cases be final and conclusive, and claimant shall accept the Newage decision on all questions relating to defects and the exchange, repair, or replacement of a part or parts.

LH-01(

7033 CENTRAL AVE. N.E. • SUITE 100 • FRIDLEY • MINNESOTA • 55432
TEL: 1-800-367-2764 • FAX: 1-800-963-9243

NEWAGE AVK SEG

IMPORTANT NOTICE

HAZARD – WARNING LABELS

The generator is supplied as a component part for installation in a generating set and is in many cases subjected to a final paint spraying operation. It is therefore desirable to fit labels on the exterior of the machine after the finishing paint is applied.

To this end a card of warning labels with instructions showing their desired position is enclosed with this manual.

It is the responsibility of the generating set manufacturer to ensure that the correct labels are fitted and are clearly visible.

September 1991

LH-01(

NUPART DIVISION -NEWAGE INTERNATIONAL LTD

IMPORTANT : PLEASE READ CAREFULLY BEFORE CONNECTING THIS AUTOMATIC VOLTAGE REGULATOR TO THE GENERATOR. APPLICABLE TO MX341 AVR E000-23410 AND SX440 AVR E000-24030

MODIFICATION TO TERMINALS

THE AVR ENCLOSED HAS A MODIFICATION TO THE CONNECTION TERMINALS AS SHOWN OPPOSITE. THERE IS NOW A NEW (ADDITIONAL) TERMINAL MARKED '2' WHICH IS INTERNALLY CONNECTED TO THE ORIGINAL TERMINAL '2'.

- IF YOUR GENERATOR HAS AN AVR LEAD MARKED '1' THEN REMOVE THE LINK (1-2) FROM THE AVR AND RECONNECT ALL LEADS TO THEIR MATCHING AVR TERMINALS.

- IF YOUR GENERATOR DOES NOT HAVE A LEAD '1' THEN LEAVE THE AVR LINK (1-2) IN PLACE AND RECONNECT ALL LEADS TO THEIR MATCHING AVR TERMINALS.

CAUTION

TAKE CARE TO ENSURE ALL LEADS ARE CORRECTLY CONNECTED TO THE IDENTICAL TERMINAL MARKERS ON THE AVR.

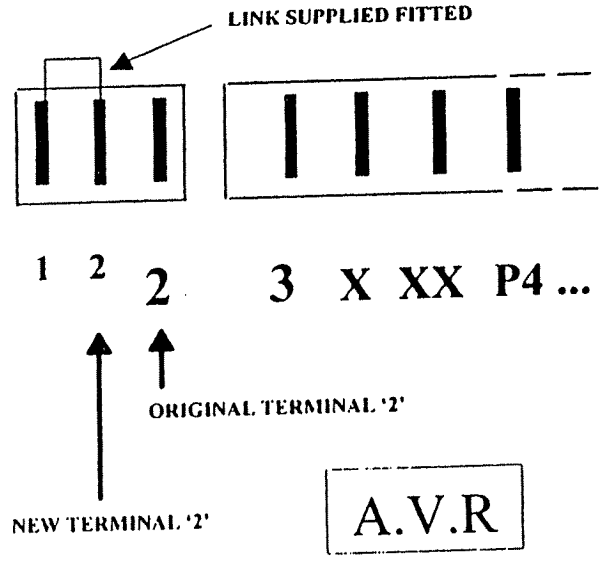

NUP-091/ 2
12/2/99

Katolight Service - Master Repair Manual - Page 1479

DA7-1341 | ISSUE B

FIRST W.O.

IF IN DOUBT-ASK

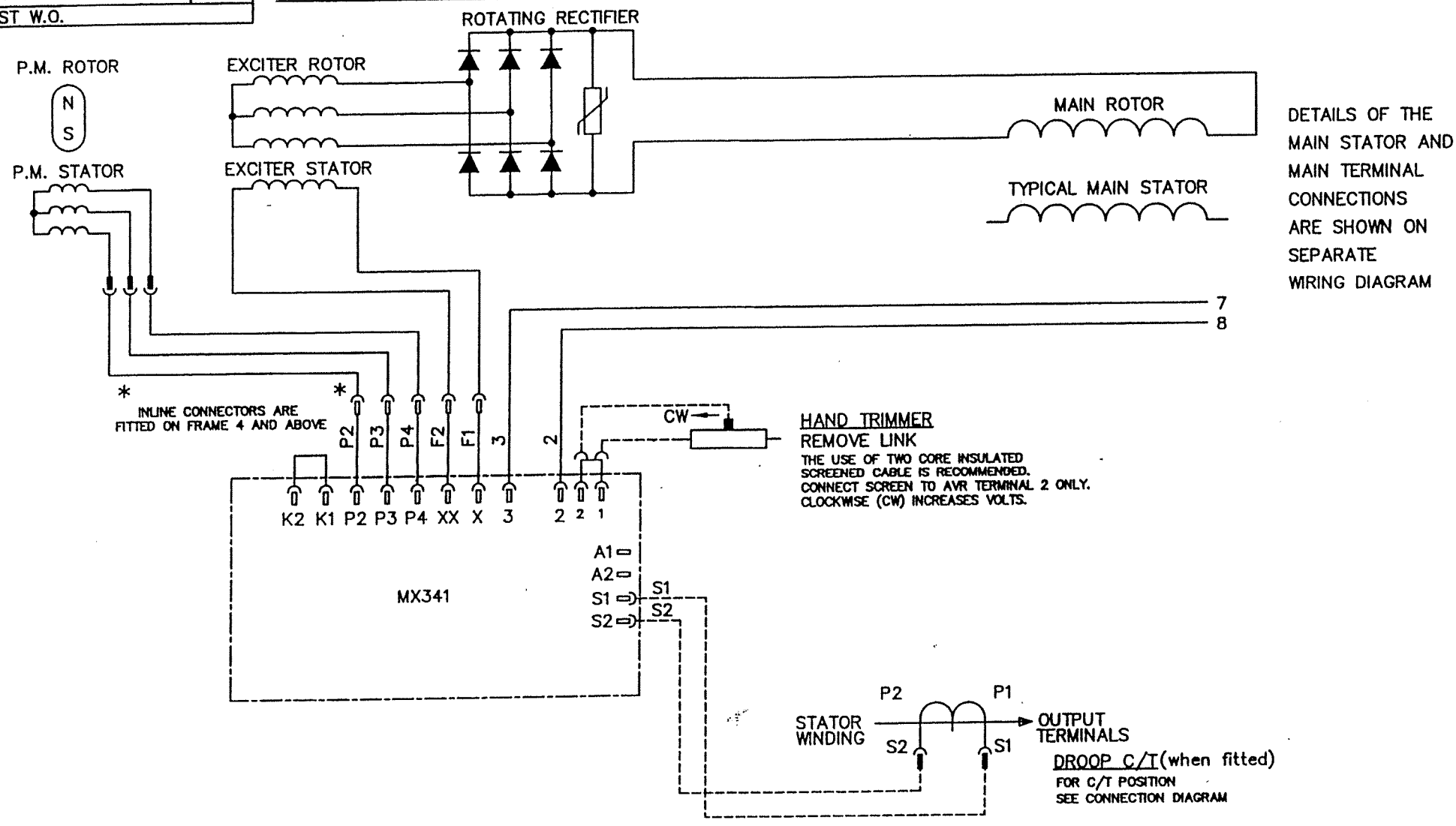

4/2461/2	B	SMH	09:06:99	ADDITIONAL TERMINAL '2' ADDED TO AVR, HAND TRIMMER CONNECTIONS REVISED
3/9120/1	A	P.N.	24:3:94	ORIGINAL ISSUE
MOD.	ISS.	DRN.	DATE	ALTERATION

CERTIFIED PRINT			
(ONLY IF SIGNED)			
BY			
DATE			
DRAWN	SMH	09:06:99	
CHK'D			
APP'D			

BASE DIAGRAM

FRAME	---
CONTROL	SERIES MX341
POLES	
No. OF ENDS	---
SENSING	2 PHASE

OTHER FEATURES

NEWAGE INTERNATIONAL Ltd
STAMFORD , ENGLAND

DA7-1341 | ISSUE B

SHEET 1 OF 1 SHEETS

DA7–A301 | ISSUE D

FIRST W.O.

IF IN DOUBT–ASK

MAIN STATOR (12 ENDS)

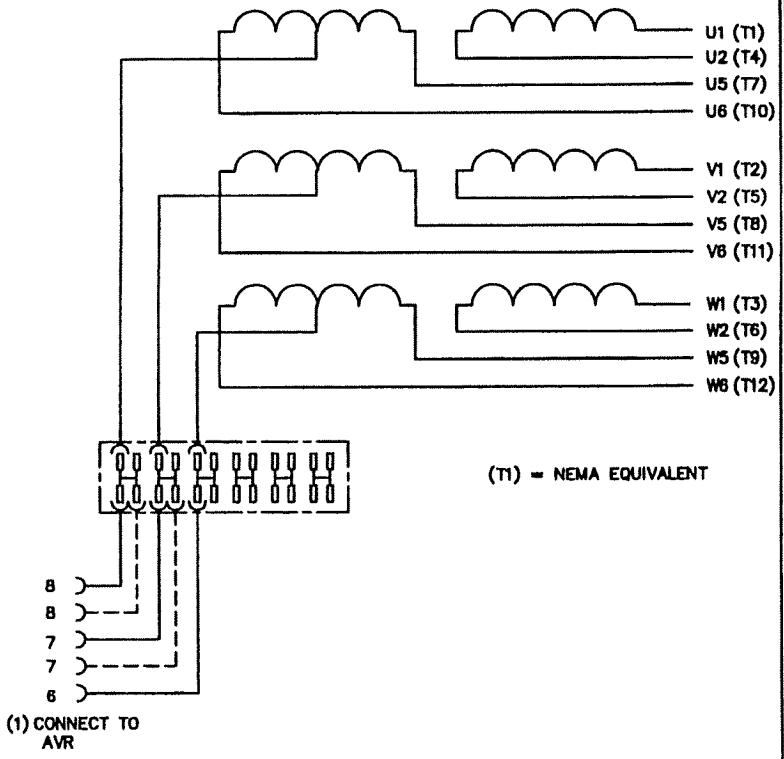

(1) LEAD 6 MAY NOT BE REQUIRED
FULL DETAILS ARE SHOWN ON THE BASE DIAGRAM.
MULTIPLE LEADS (7,8) REQUIRED ONLY FOR SX440 AVR.

MAIN TERMINAL CONNECTIONS

SERIES STAR 3PH 4W
OUTPUT TERMINALS U.V.W.N.

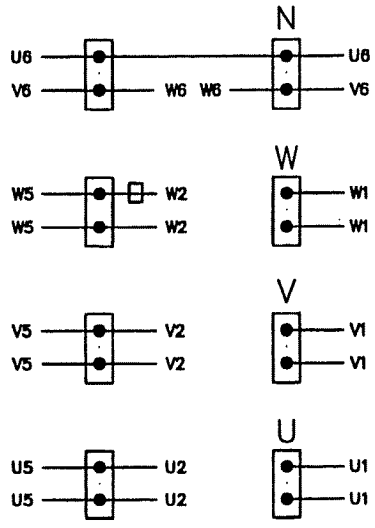

☐ DROOP C/T POSITION(when fitted)
CONNECTIONS ARE SHOWN ON BASE DIAGRAM

SERIES DELTA 3PH 4W
OUTPUT TERMINALS U.V.W.N.

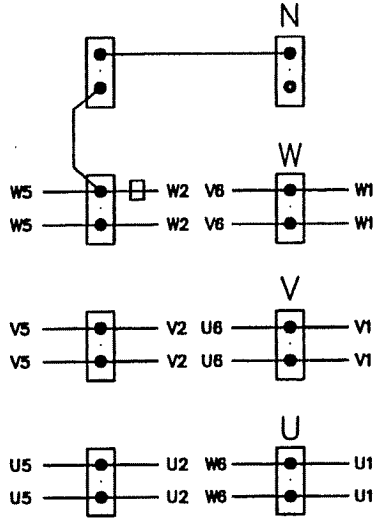

☐ DROOP C/T POSITION(when fitted)
CONNECTIONS ARE SHOWN ON BASE DIAGRAM

PARALLEL STAR 3PH 4W
OUTPUT TERMINALS U.V.W.N.

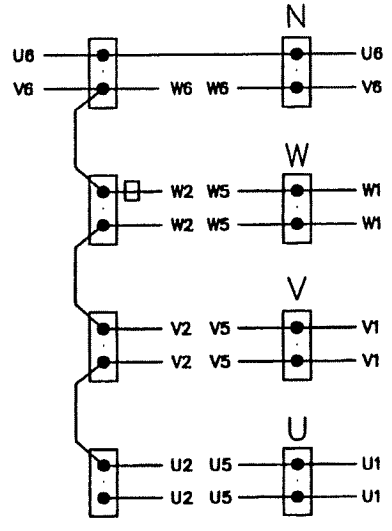

☐ DROOP C/T POSITION(when fitted)
CONNECTIONS ARE SHOWN ON BASE DIAGRAM

MULTI LEAD STATORS

THE ABOVE CONNECTIONS ARE
SHOWN USING A 24 LEAD STATOR
VARIATIONS ARE AS SHOWN

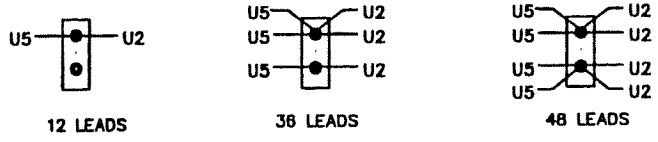

MOD.	ISS.	DRN.	DATE	ALTERATION
4/2461/2	D	SMH	09:06:99	NOTE (1) MODIFIED – MULTIPLE LEADS (7,8) etc. ADDED
3/9159	C	SMH	12:04:94	POSITION CHANGE OF DROOP TRANSFORMER W5 TO W2 (PARALLEL STAR)
3/8699	B	PN	18:08:93	ADDED TERMINAL BLOCK
3/8192	A	PN	06:01:93	ORIGINAL ISSUE

CONNECTION DIAGRAM

CERTIFIED PRINT (ONLY IF SIGNED)			
BY			
DATE			
DRAWN	SMH	09:06:99	
CH'D			
APP'D			

FRAME ---
CONTROL SERIES ---
POLES
No. OF ENDS 12
SENSING 2/3 PHASE

NEWAGE INTERNATIONAL Ltd
STAMFORD , ENGLAND

OTHER FEATURES

DA7–A301 | ISSUE D

SHEET 1 OF 1 SHEETS

Katolight Service - Master Repair Manual - Page 1483

STAMFORD
power generation

MX321 AUTOMATIC VOLTAGE REGULATOR (AVR)

SPECIFICATION, INSTALLATION AND ADJUSTMENTS

GENERAL DESCRIPTION

The MX321 is a three phase, thyristor type Automatic Voltage Regulator (AVR) and forms part of the excitation system for a brushless generator.

In addition to regulating the generator voltage, the AVR circuitry includes protective features to ensure safe reliable control of the generator. Excitation power is derived from a permanent magnet generator (PMG) to guarantee low Radio Frequency Interference (RFI) and immunity from thyristor type loads.

The AVR is linked with the main stator windings and controls the power fed to the exciter stator and hence the main rotor to maintain the machine output voltage within the specified limits, compensating for load, speed, temperature and power factor of the generator.

Soft start circuitry is included to provide a smooth controlled build up of generator output voltage.

Sustained overvoltage caused by open circuit sensing terminals is avoided by overvoltage detection circuitry which provides internal shutdown of the AVR output device.

A frequency measuring circuit continually monitors the generator output and provides underspeed protection of the excitation system by reducing the generator output voltage proportionally with speed below a presettable threshold. A further enhancement of this feature is an adjustable volts/Hz slope to improve frequency recovery time on turbo charged engines.

Current limiting may be included to allow control over the amount of short circuit current flowing during three phase and single phase short circuits on the generator output.

Uncontrolled over excitation is limited to a safe period by internal shutdown of the AVR output device. This condition remains latched until the generator has been stopped.

For complete protection, a circuit breaker option is available providing circuit isolation in event of a short circuit power device.

Provision is made for the connection of a remote voltage trimmer allowing the user fine control of the generator's output.

Accessories are available for this AVR. Please refer to factory for further details.

*The stated voltage regulation may not be maintained in the presence of certain transmitted radio signals. Any change in regulation will fall within the limits in Criteria B of EN50082-2.

TECHNICAL SPECIFICATION

SENSING INPUT

Voltage	170-250 V ac max
Frequency	50-60 Hz nominal
Phase	1 or 3
Wire	2 or 3

POWER INPUT (PMG)

Voltage	170-220 V ac
Current	3 A/phase
Frequency	100-120 Hz nominal
Phase	3
Wire	3

OUTPUT

Voltage	max 120 V dc
Current	continuous 3.7 A (See note 3) Transient 6 A for 10 seconds
Field Resistance	15 Ω minimum

REGULATION (See Note 1) +/- 0.5% RMS*

THERMAL DRIFT
(after 10 min)
0.5% for 40°C change in AVR ambient

SOFT START RAMP TIME
0.4 - 4 seconds

TYPICAL SYSTEM RESPONSE
Field current to 90% 80ms
Machine Volts to 97% 300ms

EXTERNAL VOLTAGE ADJUSTMENT
+/- 6% with 4.7 K Ω trimmer

UNDER FREQUENCY PROTECTION

Set Point (see note 2)	95% Hz
Slope	100-300% down to 30 Hz
Dwell (Recovery)	0.5-2.0 seconds

UNIT POWER DISSIPATION
18 watts maximum

ACCESSORY INPUT
+/- 1 V = +/- 5% change in output volts

QUADRATURE DROOP

Maximum sensitivity	(10 Ω Burden) 0.22 A for 5% droop @ 0p.f.

CURRENT LIMIT

sensitivity range (10 Ω Burden)	0.45 A - 1 A

OVER VOLTAGE PROTECTION

Set Point	300 V	
Time Delay (fixed)	1 second	
Circuit breaker	trip coil voltage	40-60 v dc
Circuit breaker	trip coil resistance	50-100 ohms

OVER EXCITATION PROTECTION

Set Point	75 V dc
Time Delay (fixed)	8-15 seconds

ENVIRONMENTAL

Vibration	20 - 100 Hz	50mm/sec
	100 - 2 kHz	3.3g
Relative Humidity		0 - 60°C 95%
Operating Temperature		-40 to +70°C
Storage Temperature		-55 to +80°C

NOTES
1. With 4% engine governing.
2. Factory set, semi-sealed, jumper selectable.
3. Derate linearly from 3.7A at 50°C to 2.7A at 70°C operating temperature.

DESIGN DETAILS

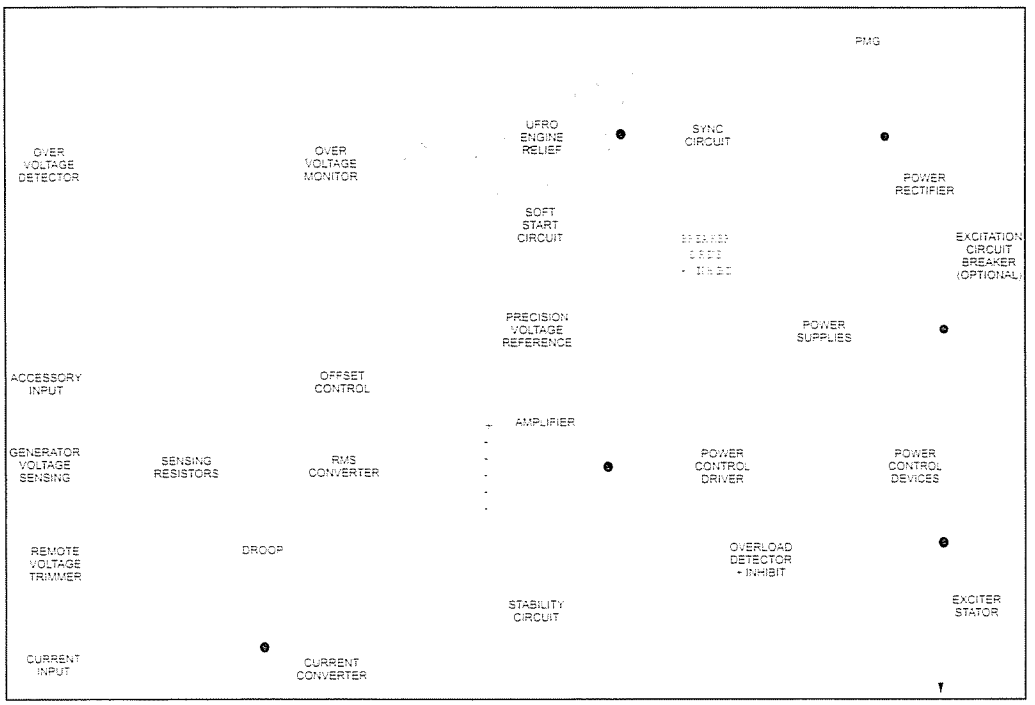

The main functions of the AVR are:

Sensing Resistors take a portion of the generator output voltage and attenuate it. This input chain of resistors includes the hand trimmer adjustment.

Quadrature droop circuit converts the current input into a voltage which is phase mixed with the sensing voltage. The result is a net increase in the output from the sensing network as the power factor lags, causing the reduction in excitation needed for reactive load sharing of paralleled generators.

RMS converter is a square law precision rectifier circuit that converts the ac signals from the sensing networks into a composite dc signal representing the mean squared value of the waveform.
The output of the RMS converter includes a variable potential divider which is the voltage range control for the AVR.

Current converter is a three phase precision rectifier and amplifier that converts the inputs from current transformers into a dc signal representing the mean value of the current waveform.

Offset control provides an interface between the AVR and accessories and allows the generator's excitation to be controlled by adding or subtracting the accessory dc output voltage to the AVR rectified sensing voltage.

Power supply components consist of zener diodes, dropper resistors and smoothing to provide the required voltages for the integrated circuits.

Precision voltage reference is a highly stable temperature compensated zener diode used for dc comparison.

Soft start circuit overrides the precision voltage reference during run up to provide a linear rising voltage.

Main Comparator/Amplifier compares the sensing voltages with the reference voltage and amplifies the difference (error) to provide a controlling signal for the power device to supply the exciter with the required amount of power to maintain the generator voltage within the specified limits.

Stability circuit provides adjustable negative ac feedback to ensure good steady state and transient performance of the control system.

Power control driver provides the means to infinitely control the conduction period of the output device. This is achieved by pedestal and ramp control followed by a level detector and driver stage.

Power control devices and rectifier vary the amount of exciter field current in response to the error signals produced by the main comparator.

Syncronising circuit provides a short pulse near the zero point of one of the phases on the PMG and is used to synchronise the Under Frequency Roll Off (UFRO) and power control circuits to the generator cycle period.

UFRO circuit measures the period of each electrical cycle and causes the reference voltage to be reduced linearly with speed below a presettable threshold. A light emitting diode (LED) gives indication of underspeed running.

Engine relief (load acceptance) circuit causes greater voltage roll off (makes the V/Hz slope steeper) to aid engine speed recovery after application of a "block" load.

Over voltage monitor continuously monitors the voltage at the generator terminals and provides signals to shut down the output device and trip an optional circuit breaker, to isolate power from the exciter and AVR if sustained overvoltage occurs.
A one second timer is included in the circuit to prevent operation during transient overvoltages, which are normal after load removal.

Overload detector continuously monitors the level of excitation and provides signals to shut down the output device if overloads last more than ten seconds. Both the overload and overvoltage conditions are latched faults requiring the generator to be stopped for reset.

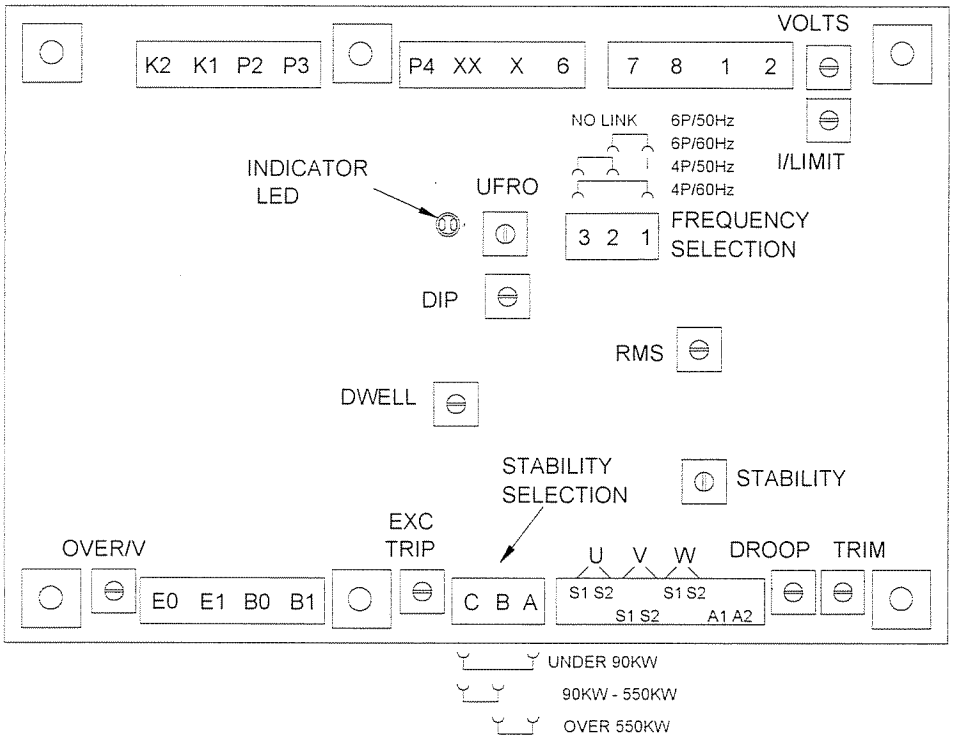

The AVR is fully encapsulated to ensure long-trouble-free operation. It is usually fitted on a panel of the terminal box. It can also be separately fitted in a switchboard.

ADJUSTMENT OF AVR CONTROLS

VOLTAGE ADJUSTMENT

The generator output voltage is set at the factory, but can be altered by careful adjustment of the volts control on the AVR board, or by the external hand trimmer if fitted. Terminals 1 & 2 on the auxiliary terminal block in the generator terminal box will be fitted with a shorting link if no hand trimmer is required.



Do not increase the voltage above the rated generator voltage. If in doubt, refer to the rating plate mounted on the generator case.

If a replacement AVR has been fitted or re-setting of the VOLTS adjustment is required, proceed as follows:-

1) Before running generator, turn VOLTS control fully anti-clockwise.

2) Turn remote volts trimmer (if fitted) to midway position.

3) Turn STABILITY control to midway position.

4) Connect a suitable voltmeter (0-300V ac) across line to neutral of the generator.

5) Start generator set, and run on no load at nominal frequency e.g. 50-53Hz or 60-63Hz.

6) If the red Light Emitting Diode (LED) is illuminated, refer to the Under Frequency Roll Off (UFRO) adjustment.

7) Carefully turn VOLTS control clockwise until rated voltage is reached.

8) If instability is present at rated voltage, refer to stability adjustment, then re-adjust voltage if necessary.

9) Voltage adjustment is now completed.

STABILITY SELECTION

The "jumper" selector lead should be correctly linked (A,B,C at the bottom of the board) for the frame size of the generator (See diagram).

STABILITY ADJUSTMENT

The AVR includes a stability or damping circuit to provide good steady state and transient performance of the generator.

The correct setting can be found by running the generator at no load and slowly turning the stability control anti-clockwise until the generator voltage starts to become unstable.

The optimum or critically damped position is slightly clockwise from this point (i.e. where the machine volts are stable but close to the unstable region).

NEWAGE AVK SEG
PO Box 17 • Barnack Road • Stamford • Lincolnshire • PE9 2NB
Tel: 00 44 (0)1780 484000 • Fax: 00 44 (0)1780 484100
Website: www.newage-avkseg.com

© 2002 Newage International Limited.
Reprinted with permission of N.I. only.
Printed in England.

UNDER FREQUENCY ROLL OFF (UFRO) ADJUSTMENT

The AVR incorporates an underspeed protection circuit which gives a volts/Hz characteristic when the generator speed falls below a presettable threshold known as the "knee" point.

The correct linking must first be set with the "jumper" lead for 4 Pole or 6 Pole, 50Hz or 60Hz. (See Diagram markings 1,2,3 near centre of board).

The red Light Emitting Diode (LED) gives indication that the UFRO circuit is operating, and turning the UFRO control clockwise lowers the frequency setting of the "knee" point and extinguishes the LED.

For optimum setting, the LED should illuminate as the frequency falls just below nominal, i.e. 47Hz on a 50Hz system or 57Hz on a 60Hz system.

If the red LED is illuminated and no output voltage is present, refer to Over Excitation and Over Voltage protection adjustments.

DIP ADJUSTMENT

The 'DIP' adjustment allows some control over the generator voltage dip upon the application load.

This feature is mostly used when the generator is coupled to turbo-charged engines with limited block load acceptance, and operates only when the speed is below the UFRO knee point, (LED illuminated).

The circuit works by increasing the volts/Hz slope to give greater voltage roll off in proportion to speed.

With the 'DIP' control fully anti-clockwise the generator voltage characteristics will follow the normal V/Hz line as the frequency falls below nominal.

Turning the 'DIP' control more clockwise provides greater voltage dip allowing easier engine recovery.

DWELL ADJUSTMENT

The 'DWELL' operates only when the speed has fallen below the knee point set by the UFRO adjustment. The "dwell" or recovery time can be adjusted to time the voltage recovery period. Steep 'dip' gradients can be set without causing governor instability.

Clockwise adjustment increases dwell time. With the potentiometer fully counter clockwise there is no dwell and the recovery follows exactly the engine speed recovery.

DROOP ADJUSTMENT

Generators intended for parallel operation are fitted with a quadrature droop C.T. which provides a power factor correction signal for the AVR. The C.T. is connected to S1, S2 (W phase) on the AVR.

The DROOP adjustment is normally preset in the works to give 5% voltage droop at full load zero power factor.

Clockwise increases the amount of C.T. signal injected into the AVR and increases the droop with lagging power factor (cos O).

With the control fully anti-clockwise there is no droop.

TRIM ADJUSTMENT (V/TRIM)

An auxiliary input is provided to connect to the VPF controller, (A1,A2). It is designed to accept dc signals up to +/- 5 volts.

The dc signal on this input adds to or subtracts from the AVR sensing circuit, depending on polarity.

The V/Trim control allows the user to adjust the sensitivity of the VPF controller.

With V/Trim fully anti-clockwise the VPF controller has no effect. Clockwise it has maximum effect. Normal setting is fully clockwise.

OVER EXCITATION (EXC) ADJUSTMENT

The adjustment is set and sealed in the works and should not be altered.

An over excitation condition is indicated on the common red LED which also indicates underspeed running.

The generator must be stopped to reset an over excitation trip.

OVER VOLTAGE (OVER V) ADJUSTMENT

The AVR includes over voltage protection circuitry to remove generator excitation in the event of a short circuit power device or loss of sensing input.

Separate terminals are provided for the over voltage circuit E1, E0 which connect to the generator windings independently of the AVR sensing terminals.

Provision is made for the connection of a small circuit breaker to break terminals K1, K2, interrupting the power supply to the exciter field, through simple manual switching. The addition to this circuit breaker of leads B0 and B1, causes the power supply to be interrupted automatically in the event of an over voltage.

The OVER V adjustment is normally set and sealed at the factory but can be reset on retrofit AVRs. Clockwise increases the tripping voltage.

An over voltage condition is indicated on the common red LED which also indicates underspeed running and over load.

The generator must be stopped to reset an overvoltage trip.

CURRENT LIMIT (I/LIMIT) ADJUSTMENT

An optional extra current limit adjustment is provided to regulate the amount of short circuit current.

This is particularly useful during single phase short circuits, preventing overstressing of conductors and insulation.

To use this feature, three current transformers (C.T.s) are fitted on the generator to provide feedback signals to the AVR S1 S2 terminals.

Under short circuit conditions, clockwise rotation of the I / LIMIT adjustment increases the short circuit current and anti-clockwise reduces it.

Short circuit current is limited to a maximum duration of ten seconds by the overload circuit.

Normally the I / LIMIT adjustment would be set and sealed at the factory when the current limit feature is required.

RAMP ADJUSTMENT

The adjustment is normally set and sealed in the works to give a 3 second soft start or ramp time. The setting can be altered if desired to vary the ramp time over the range of 0.4 to 4 seconds. Clockwise increases the ramp time.

NEWAGE

LIMITED

A SUBSIDIARY OF NEWAGE INTERNATIONAL LIMITED

AC GENERATOR WARRANTY

GENERAL

Newage Limited warrants any product of its manufacture to be free from defects in materials and workmanship for a period of time dependent upon service and application.

Stamford and Markon Generators are built in accordance with specific standards as indicated in our sales literature. Conformance with these standards on Newage's part requires that the products be used as intended and certain precautions be taken by the user and assembler.

AC Generators must be properly protected, ventilated, and mounted to ensure trouble-free running. The user should take precautions to ensure that the ingress of moisture, recirculating exhaust, dust, insects, rodents and debris are avoided. Coastal and marine installations require protection against salt-laden spray. Anti-condensation heaters must be installed where temperature differentials and relative humidity promote condensation. Electrical system protection must be properly selected, rated, installed and functioning.

Newage's warranty period does not extend beyond that offered by the original purchaser, and is voided by any resale to other than the first owner/user.

WARRANTY PERIODS

A. Emergency or Standby Duty

Standby generators must be permanently installed, properly enclosed and ventilated, and used as back up to the normal power source. Mobile or rental sets do not fit this category.

The warranty period is 24 months from date of installation by the first owner/user, or 30 months after date of shipment by Newage, whichever is the shorter, or 1000 hours of operation, limited to a maximum of 500 hours per year, for 2 years, whichever is the shorter.

B. Continuous or Prime Duty

Continuous or prime power service describes operation in a permanent or mobile application where no other source of power is generally available. Rental sets, and specific products for irrigation and refrigeration meet this criteria, irrespective of running hours. Cogeneration and peak shaving installations are considered prime power.

The warranty period is 12 months from date of start-up by the first owner/user, or 18 months after date of shipment by Newage, whichever is the shorter. Hours of operation are unrestricted, provided service is conducted as indicated in our Operation and Maintenance Manuals, and maintenance is performed per the manual.

CORRECTIVE ACTION

Warranty work can only be approved and initiated by Newage Limited after receipt of the failure details by phone or fax. This will permit Newage Limited to determine the best course of action. Newage will not participate in any claim where work has proceeded without prior knowledge being provided.

Newage Limited will make good by repair, or, at its option, by replacement, any fault which, under proper use, appears in the goods within the warranty period and is found on examination by Newage or its appointed representative to be solely due to defective materials or workmanship. The defective part or parts must be promptly returned, prepaid with all identification numbers and marks intact to a Newage facility, representative, or, if appropriate, to the dealer who supplied the goods. Where such a course of action is impossible or inappropriate, Newage Limited will accept a set of photographs from its appointed representative permitting a visual analysis of the failure prior to any corrective action.

The repaired or replacement part will be delivered prepaid to the first destination within the 48 contiguous states and Canadian provinces, free of charge. This warranty does not cover the removing/installing and defective/replacement equipment, nor any costs associated with equipment as manufactured by others that may be impacted by the defect.

CONSEQUENTIAL DAMAGE AND LIABILITY

Newage Limited disclaims any liability for consequential damages (personal and property) from the buyer and its customers resulting from a defect within the warranty period. Newage's maximum liability will not exceed the purchase price of the Newage product purchased by the first buyer and shall be limited to repair, replacement, or refund.

Newage Limited liability under this warranty shall be in lieu of any warranty on condition implied by law as to the quality or fitness for any particular purpose of the goods, and save as expressly provided in the warranty. Newage Limited shall not be under any liability, whether in contract, tort or otherwise, with respect to defects in goods delivered, or for any injury, damage or loss resulting from such defects, or from any work done in connection therewith.

JUDGEMENT

Newage Limited judgment shall, in all cases be final and conclusive, and claimant shall accept the Newage decision on all questions relating to defects and the exchange, repair, or replacement of a part or parts.

STAMFORD

AC GENERATORS FROM NEWAGE INTERNATIONAL

MARKON

NEWAGE LIMITED
4700 MAIN ST. NE • FRIDLEY MN • 55421
TOLL FREE 8

Katolight Service - Master Repair Manual - Page 1489

NEWAGE STAMFORD

A SUBSIDIARY OF NEWAGE INTERNATIONAL LTD.

NEWAGE LTD.

P.O. Box 346
Jefferson Building
106 chesley Drive, 2 Floor
Media, PA 19063

Technical Note

ITEM: MX & SX AVR's

SUB: U.F.R.O Setting

The setting on the new AVR's may in certain instances, require tuning.

The symptoms are as follows:

1) As load increases, the engine speed falls to the nominal frequency, ie, 60 or 50Hz, or slightly lower, 50 or 49Hz.

2) When this happens, the U.F.R.O. circuit cuts in, and the voltage drops very quickly, shedding load and allowing the engine to recover speed slightly.

3) As it recovers, the U.F.R.O. circuit switches off, and the volts rise to normal, causing the engine load to increase, dropping the speed again.

4) At this point, the U.F.R.O. cuts in again, repeating the whole procedure, setting up a volts/ Hz fluctuation with a 5 to 10% voltage swing.

To resolve the problem:

1) Check to see if the L.E.D. light on the AVR is switching on and off.

2) For 60Hz readjust the U.F.R.O. setting to come on at 57Hz.

3) Then turn the "Dip" control fully counter clockwise to ensure this is fully out of the circuit.

RWG:dmw

NEWAGE
INTERNATIONAL

IMPORTANT NOTICE

HAZARD - WARNING LABELS

The generator is supplied as a component part for installation in a generating set and is in many cases subjected to a final paint spraying operation. It is therefore desirable to fit labels on the exterior of the machine after the finishing paint is applied.

To this end a card of warning labels with instructions showing their desired position is enclosed with this manual.

It is the responsibility of the generating set manufacturer to ensure that the correct labels are fitted and are clearly visible.

September 1991

NUPART DIVISION -NEWAGE INTERNATIONAL LTD

IMPORTANT : PLEASE READ CAREFULLY BEFORE CONNECTING THIS AUTOMATIC VOLTAGE REGULATOR TO THE GENERATOR. APPLICABLE TO MX341 AVR E000-23410 AND SX440 AVR E000-24030

MODIFICATION TO TERMINALS

THE AVR ENCLOSED HAS A MODIFICATION TO THE CONNECTION TERMINALS AS SHOWN OPPOSITE. THERE IS NOW A NEW (ADDITIONAL) TERMINAL MARKED '2' WHICH IS INTERNALLY CONNECTED TO THE ORIGINAL TERMINAL '2'.

- IF YOUR GENERATOR HAS AN AVR LEAD MARKED '1' THEN REMOVE THE LINK (1-2) FROM THE AVR AND RECONNECT ALL LEADS TO THEIR MATCHING AVR TERMINALS.

- IF YOUR GENERATOR DOES NOT HAVE A LEAD '1' THEN LEAVE THE AVR LINK (1-2) IN PLACE AND RECONNECT ALL LEADS TO THEIR MATCHING AVR TERMINALS.

CAUTION

TAKE CARE TO ENSURE ALL LEADS ARE CORRECTLY CONNECTED TO THE IDENTICAL TERMINAL MARKERS ON THE AVR.

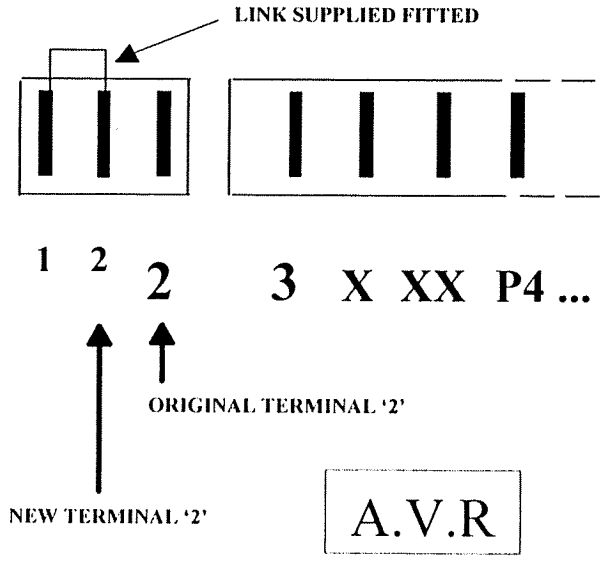

NUP-091/ 2
12/2/99

Katolight Service - Master Repair Manual - Page 1495

DA7-1341 | ISSUE A

FIRST W.O.

IF IN DOUBT ASK

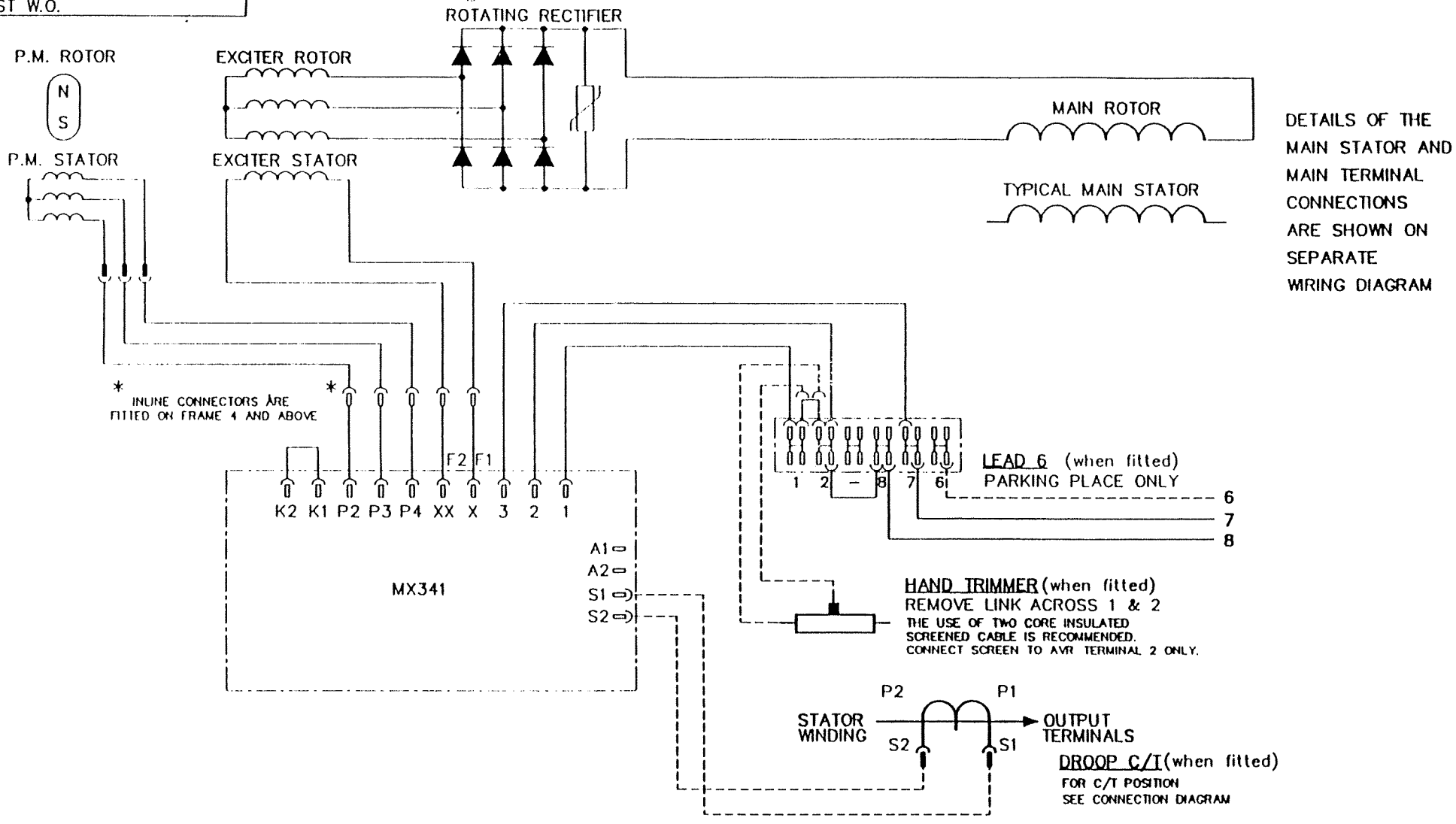

CERTIFIED PRINT (ONLY IF SIGNED)	FRAME ---	OTHER FEATURES	
BY	CONTROL SERIES MX341		
DATE	POLES		
DRAWN P.N. 24:3:94	No. OF ENDS ---		
CHK'D	SENSING 2 PHASE	DA7-1341	ISSUE A
APP'D	NEWAGE INTERNATIONAL Ltd STAMFORD, ENGLAND	SHEET 1 OF 1 SHEETS	

BASE DIAGRAM

MOD.	ISS	DRN.	DATE	ALTERATION
3/9120/1	A	P.N.	24:3:94	ORIGINAL ISSUE

Katolight Service - Master Repair Manual - Page 1497

DA7–A101 | ISSUE E

FIRST W.O.

IF IN DOUBT–ASK

MAIN STATOR (12 ENDS)

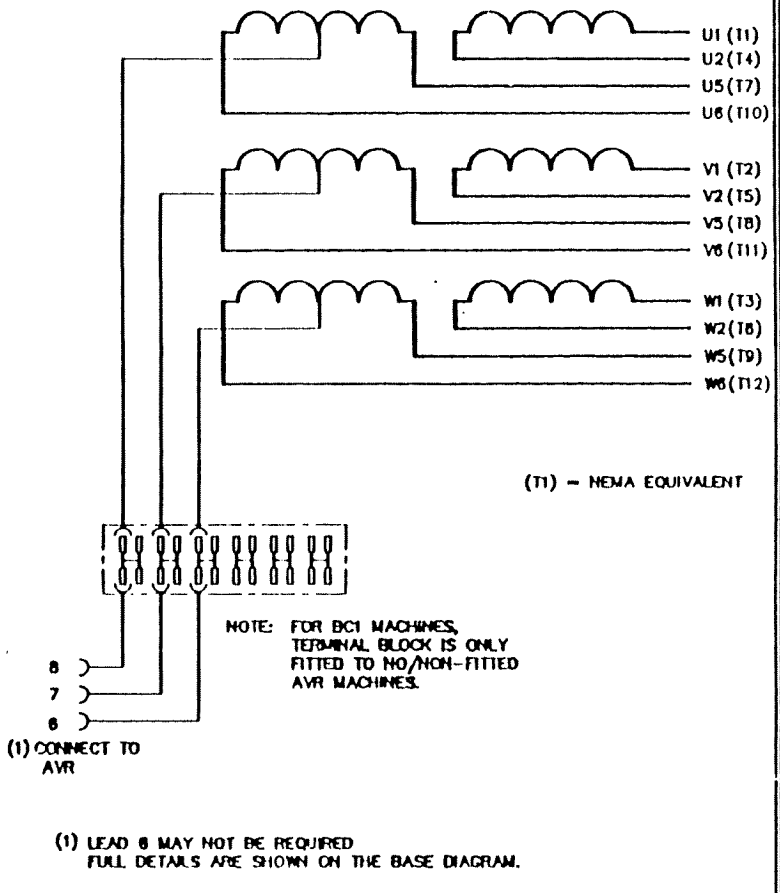

(1) LEAD 6 MAY NOT BE REQUIRED FULL DETAILS ARE SHOWN ON THE BASE DIAGRAM.

MAIN TERMINAL CONNECTIONS

SERIES STAR 3PH 4W
OUTPUT TERMINALS U.V.W.N.

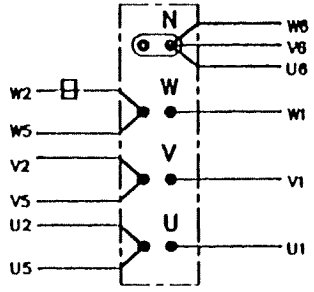

☐ DROOP C/T POSITION(when fitted) CONNECTIONS ARE SHOWN ON BASE DIAGRAM

SERIES DELTA 3PH 4W
OUTPUT TERMINALS U.V.W.N.

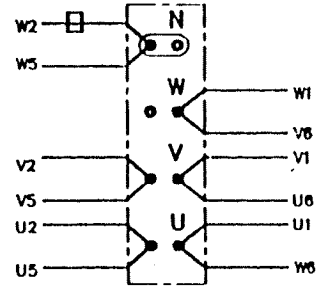

☐ DROOP C/T POSITION(when fitted) CONNECTIONS ARE SHOWN ON BASE DIAGRAM

PARALLEL STAR 3PH 4W
OUTPUT TERMINALS U.V.W.N.

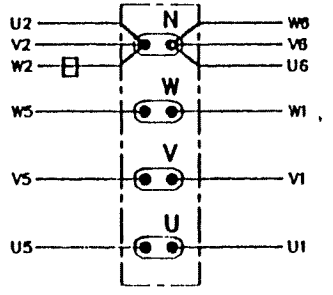

☐ DROOP C/T POSITION(when fitted) CONNECTIONS ARE SHOWN ON BASE DIAGRAM

MOD.	ISS.	DRN.	DATE	ALTERATION
3/9810	E	S.H.	25:1:95	TERMINAL BLOCK NOTE ALTERED
3/9762	D	S.H.	4:1:95	NOTE ADDED TO TERMINAL BLOCK FOR BC MACHINES ONLY
3/8699	C	P.N.	18:8:94	ADDED TERMINAL BLOCK
3/8428	B	P.N.	17:3:94	DELTA CONNECTION U1 WAS U6 AND U6 WAS U1 ETC
3/8192	A	P.N.	5:1:93	ORIGINAL ISSUE

CERTIFIED PRINT (ONLY IF SIGNED)
BY
DATE
DRAWN P.N. 5:1:93
CH'D SH. 25.1.95
APP'D CR. 25.1.95

CONNECTION DIAGRAM

FRAME ----
CONTROL SERIES ---
POLES
No. OF ENDS 12
SENSING 2/3 PHASE

OTHER FEATURES

NEWAGE INTERNATIONAL Ltd
STAMFORD, ENGLAND

DA7–A101 | ISSUE E

SHEET 1 OF 1 SHEETS

DA7-A300 | ISSUE C

FIRST W.O.

IF IN DOUBT-ASK

MAIN STATOR (12 ENDS)

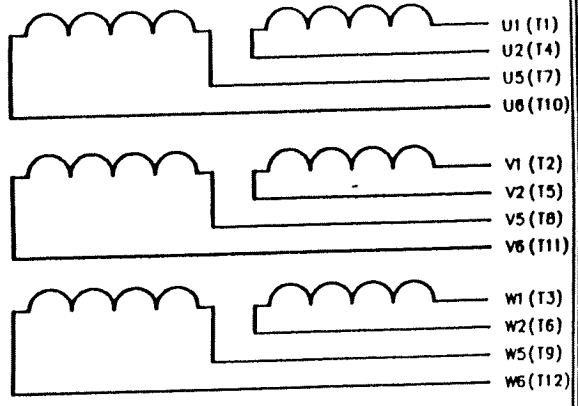

(T1) = NEMA EQUIVALENT

CONNECT TO AVR

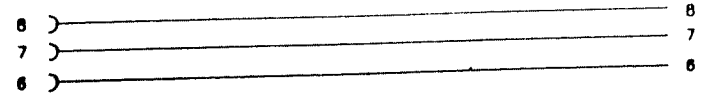

DEPENDING ON AVR TYPE MULTIPLE LEADS (8,7,6) WILL BE REQUIRED
LEAD 6 MAY NOT BE REQUIRED
FULL DETAILS ARE SHOWN ON THE BASE DIAGRAM.

- - - - - - WHERE SUPPLIED

MAIN TERMINAL CONNECTIONS

SERIES STAR 3PH 4W
OUTPUT TERMINALS U.V.W.N.

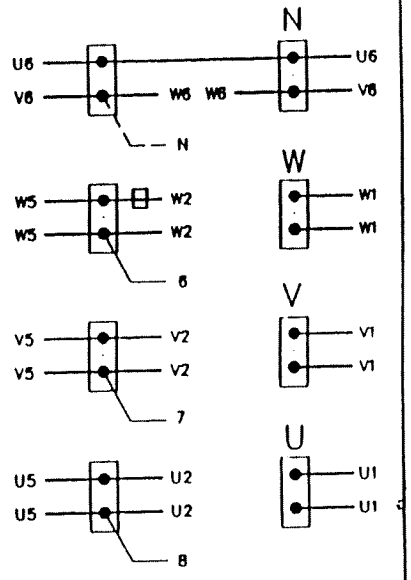

☐ DROOP C/T POSITION(when fitted)
CONNECTIONS ARE SHOWN ON BASE DIAGRAM

SERIES DELTA 3PH 4W
OUTPUT TERMINALS U.V.W.N.

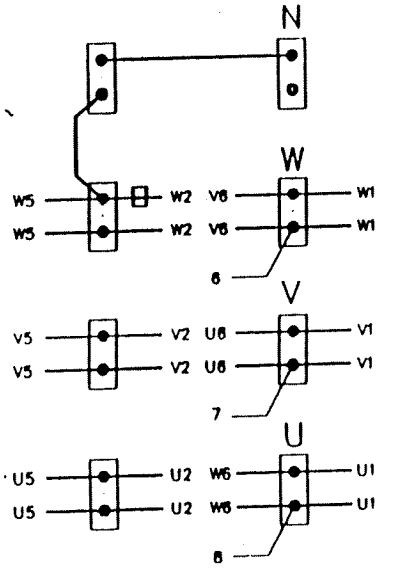

☐ DROOP C/T POSITION(when fitted)
CONNECTIONS ARE SHOWN ON BASE DIAGRAM

PARALLEL STAR 3PH 4W
OUTPUT TERMINALS U.V.W.N

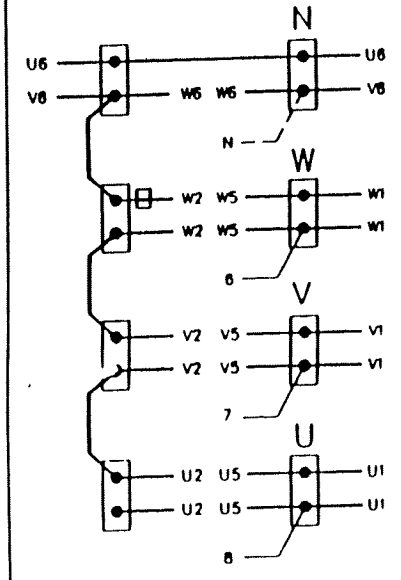

☐ DROOP C/T POSITION(when fitted)
CONNECTIONS ARE SHOWN ON BASE DIAGRAM

MULTI LEAD STATORS

THE ABOVE CONNECTIONS ARE SHOWN USING A 24 LEAD STATOR
VARIATIONS ARE AS SHOWN

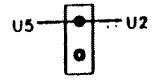

12 LEADS

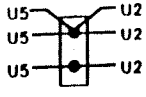

36 LEADS

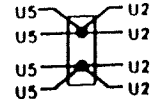

48 LEADS

MOD.	ISS.	DRN.	DATE	ALTERATION
4/0174/3	C	S.H.	20:9:95	ADDITIONAL NEUTRAL LEAD ADDED TO NEUTRAL TERMINAL (SERIES/PARA STAR)
3/9155	B	S.H.	12:4:94	POSITION CHANGE OF DROOP TRANSFORMER W5 TO W2 (PARALLEL STAR)
3/8192	A	P.N.	5:1:93	ORIGINAL ISSUE

CERTIFIED PRINT (ONLY IF SIGNED)		
BY		
DATE		
DRAWN	P.N.	5:1:93
CH'D		
APP'D		

CONNECTION DIAGRAM

FRAME	---
CONTROL	SERIES ---
POLES	
No. OF ENDS	12
SENSING	2/3 PHASE

OTHER FEATURES

NEWAGE INTERNATIONAL Ltd
STAMFORD , ENGLAND

DA7-A300 | ISSUE C

SHEET 1 OF 1 SHEETS

Katolight Service - Master Repair Manual - Page 1501

MX341 AUTOMATIC VOLTAGE REGULATOR (AVR)

SPECIFICATION, INSTALLATION AND ADJUSTMENTS

GENERAL DESCRIPTION

The MX341 is a two phase sensed Automatic Voltage Regulator (AVR) and forms part of the excitation system for a brushless generator.

In addition to regulating the generator voltage, the AVR circuitry includes protective features to ensure safe reliable control of the generator. Excitation power is derived from a permanent magnet generator (PMG) to guarantee low Radio Frequency Interference (RFI) and immunity from thyristor type loads.

The AVR is linked with the main stator windings and controls the power fed to the exciter stator and hence the main rotor to maintain the machine output voltage within the specified limits, compensating for load, speed, temperature and power factor of the generator.

Soft start circuitry is included to provide a smooth controlled build up of generator output voltage.

A frequency measuring circuit continually monitors the shaft speed of the generator and provides underspeed protection of the excitation system by reducing the generator output voltage proportionally with speed below a presettable threshold. A further enhancement of this feature is an adjustable volts/Hz slope to improve frequency recovery time on turbo charged engines.

Uncontrolled over excitation is limited to a safe period by internal shutdown of the AVR output device. This condition remains latched until the generator has been stopped.

Provision is made for the connection of a remote voltage trimmer allowing the user fine control of the generator's output.

Accessories are available for this AVR. Please refer to factory for further details.

TECHNICAL SPECIFICATION

SENSING INPUT

Voltage	170-250 V ac max
Frequency	50-60 Hz nominal
Phase	2
Wire	2

POWER INPUT (PMG)

Voltage	140-220 V ac
Current	3 A/phase
Frequency	100-120 Hz nominal
Phase	3
Wire	3

OUTPUT

Voltage	max 120 V dc
Current	continuous 2.7 A Transient 6 A for 10 seconds
Field Resistance	15 Ω minimum

REGULATION (See Note 1) +/- 1%

THERMAL DRIFT
(after 10 min)
1% for 40°C change in AVR ambient

SOFT START RAMP TIME
3 seconds

TYPICAL SYSTEM RESPONSE
Field current to 90% 80ms
Machine Volts to 97% 300ms

EXTERNAL VOLTAGE ADJUSTMENT
+/- 6% with 1 K Ω trimmer

UNDER FREQUENCY PROTECTION

Set Point (see note 2)	95% Hz
Slope	100-300% down to 30 Hz

UNIT POWER DISSIPATION
12 watts maximum

ACCESSORY INPUT
+/- 1 V = +/- 5% change in output volts

QUADRATURE DROOP

Maximum sensitivity	(10 Ω Burden) 0.07A for 5% droop @ 0p.f.

OVER EXCITATION PROTECTION

Set Point	75 V dc
Time Delay (fixed)	10 seconds

ENVIRONMENTAL

Vibration	20-100 Hz	50mm/sec
	100 Hz-2 k Hz	3.3g
Relative Humidity	0-60°C	95%
Operating Temperature		-40°C to + 70°C
Storage Temperature		-55°C + 80°C

NOTES
1. With 4% engine governing
2. Factory set, semi-sealed, jumper selectable.

DESIGN DETAILS

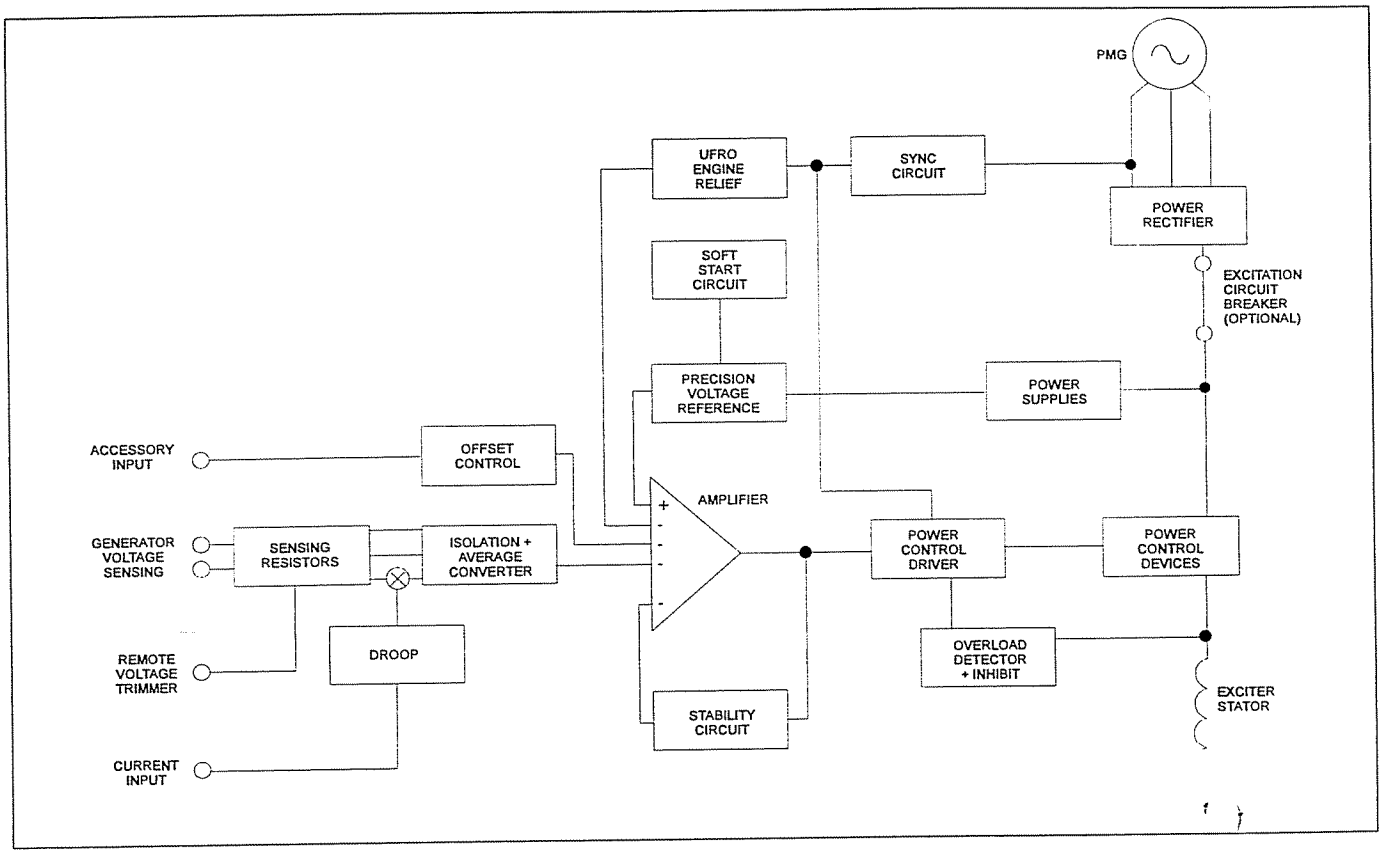

The main functions of the AVR are:

Sensing Resistors take a proportion of the generator output voltage and attenuate it. This input chain of resistors includes the range potentiometer and hand trimmer which adjust the generator voltage. An isolating transformer is included to allow connection to windings of different polarity and phase. An operational precision rectifier converts the ac sensing voltage into dc for further processing.

Quadrature droop circuit converts the current input into a voltage which is phase mixed with the sensing voltage. The result is a net increase in the output from the sensing network as the power factor lags, causing the reduction in excitation needed for reactive load sharing of paralleled generators.

A trimmer allows control over the amount of droop signal.

Offset Control provides an interface between the AVR and accessories.

Power Supply components consist of zener diodes, dropper resistors and smoothing to provide the required voltages for the integrated circuits.

Precision voltage reference is a highly stable temperature compensated zener diode for dc comparison.

Soft Start circuit overrides the precision voltage reference during run-up to provide a linear rising voltage.

Main Comparator/Amplifier compares the sensing voltage to the reference voltage and amplifies the difference (error) to provide a controlling signal for the power device.

Stability circuit provides adjustable negative ac feedback to ensure good steady state and transient performance of the control system.

Power Control Driver controls the conduction period of the output device. This is achieved by pedestal and ramp control followed by a level detector and driver stage.

Power Control devices and rectifier vary the amount of exciter field current in response to the error signals produced by the main comparator.

Synchronising circuit provides a short pulse near the zero point of one of the phases on the PMG and is used to synchronise the Under Frequency Roll Off (UFRO) and power control circuits to the generator cycle period.

UFRO circuit measures the period of each electrical cycle and reduces the reference voltage linearly with speed below a presettable threshold. A light emitting diode (LED) gives indication of underspeed.

Engine Relief (load acceptance) circuit causes greater voltage roll off (makes the volts/Hz slope steeper) to aid engine speed recovery after application of a "block" load.

Overload detector continously monitors the level of excitation and provides signals to shut down the output device if overloads last more than ten seconds. An overload condition produces a latched fault requiring the generator to be stopped for reset.

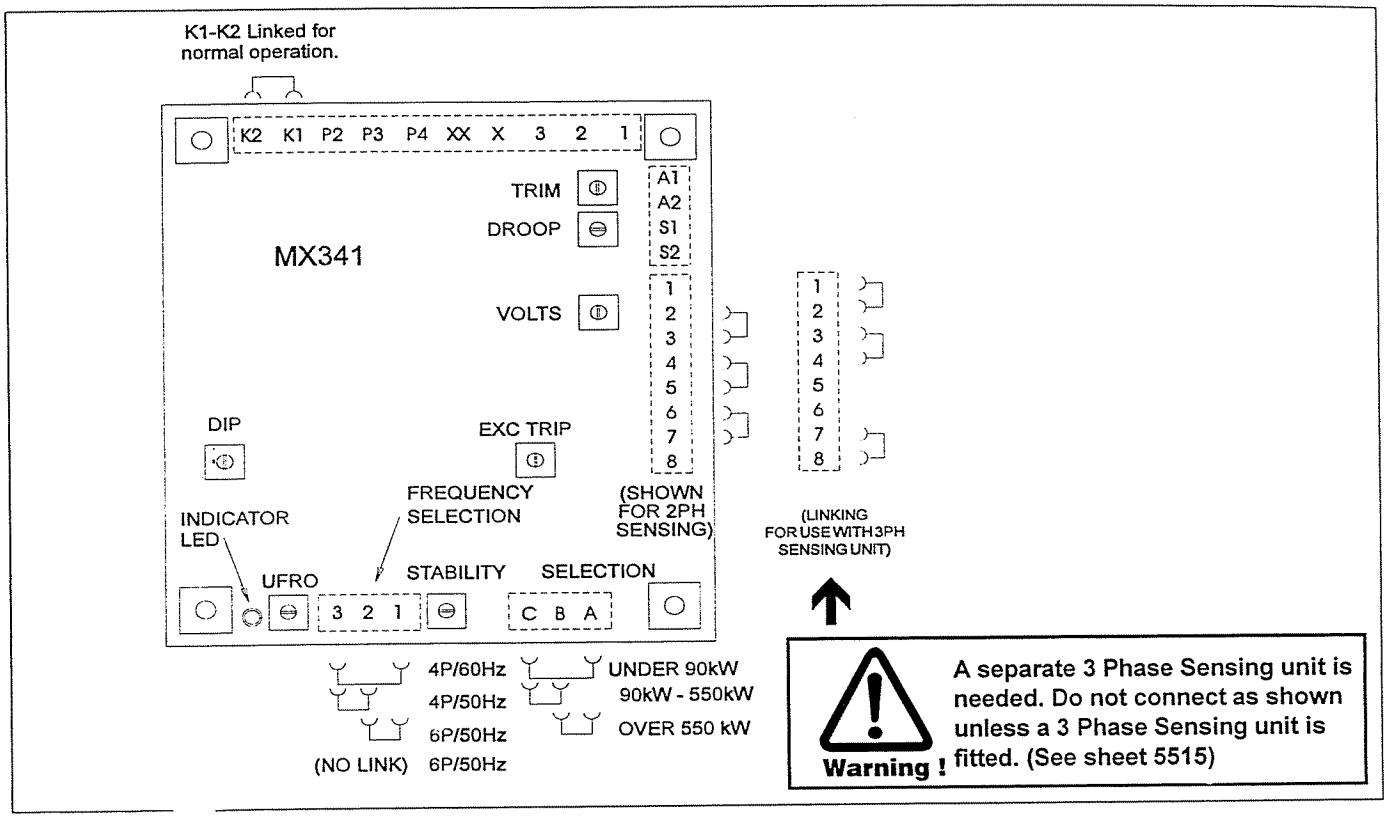

SUMMARY OF AVR CONTROLS

CONTROL	FUNCTION	DIRECTION
VOLTS	TO ADJUST GENERATOR OUTPUT VOLTAGE	CLOCKWISE INCREASES OUTPUT VOLTAGE
STABILITY	TO PREVENT VOLTAGE HUNTING	CLOCKWISE INCREASES STABILITY OR DAMPING EFFECT
UFRO	TO SET UNDER FREQUENCY ROLL OFF KNEE POINT	CLOCKWISE REDUCES THE KNEE POINT FREQUENCY
DROOP	TO SET GENERATOR OR DROOP TO 5% AT FULL LOAD 0 PF	CLOCKWISE INCREASES THE DROOP
V/TRIM	TO MATCH AVR INPUT TO ACCESSORY OUTPUT	CLOCKWISE ALLOWS THE ACCESSORY MORE CONTROL OVER AVR
EXC TRIP	TO SET THE OVER EXCITATION CUT OFF LEVEL	CLOCKWISE INCREASES THE CUT OFF LEVEL
DIP	TO SET THE INITIAL FREQUENCY RELATED VOLTAGE DIP	CLOCKWISE INCREASES THE VOLTAGE DIP

The AVR is fully encapsulated to ensure long trouble-free operation. It is usually fitted on a panel of the terminal box. It can also be separately fitted in a switchboard.

ADJUSTMENT OF AVR CONTROLS

VOLTAGE ADJUSTMENT

The generator output voltage is set at the factory, but can be altered by careful adjustment of the volts control on the AVR board, or by the external hand trimmer if fitted. Terminals 1 & 2 on the auxiliary terminal block in the generator terminal box will be fitted with a shorting link if no hand trimmer is required.

Warning ! **Do not increase the voltage above the rated generator voltage. If in doubt, refer to the rating plate mounted on the generator case.**

If a replacement AVR has been fitted or re-setting of the VOLTS adjustment is required, proceed as follows:-

1) Before running generator, turn VOLTS control fully anti-clockwise.

2) Turn remote volts trimmer (if fitted) to midway position.

3) Turn STABILITY control to midway position.

4) Connect a suitable voltmeter (0-300V ac) across line to neutral of the generator.

5) Start generator set, and run on no load at nominal frequency e.g. 50-53Hz or 60-63Hz.

6) If the red Light Emitting Diode (LED) is illuminated, refer to the Under Frequency Roll Off (UFRO) adjustment.

7) Carefully turn VOLTS control clockwise until rated voltage is reached.

8) If instability is present at rated voltage, refer to stability adjustment, then re-adjust voltage if necessary.

9) Voltage adjustment is now completed.

STABILITY ADJUSTMENT

The AVR includes a stability or damping circuit to provide good steady state and transient performance of the generator.

The correct setting can be found by running the generator at no load and slowly turning the stability control anti-clockwise until the generator voltage starts to become unstable.

The optimum or critically damped position is slightly clockwise from this point (i.e. where the machine volts are stable but close to the unstable region).

OPTIMUM RESPONSE SELECTION

The "jumper" selector lead should be correctly linked (A,B,C at the bottom of the board) for the frame size of the generator (See diagram).

UNDER FREQUENCY ROLL OFF (UFRO) ADJUSTMENT

The AVR incorporates an underspeed protection circuit which gives a volts/Hz characteristic when the generator speed falls below a presettable threshold known as the "knee" point.

The correct linking must first be set with "jumper" lead for 4 or 6 pole, 50 or 60Hz operation (see diagram).

The red Light Emitting Diode (LED) gives indication that the UFRO circuit is operating.

The UFRO adjustment is preset and sealed at the works and only requires the selection of 50/60Hz using the jumper link.

Adjustment of the UFRO control will be necessary if the unit is used on a 6 pole machine to replace an earlier AVR type.

For optimum setting, the LED should illuminate as the frequency falls just below nominal, i.e. 47Hz on a 50Hz system or 57Hz on a 60Hz system.

If the red LED is illuminated and no output voltage is present, refer to Over Excitation adjustment.

DIP ADJUSTMENT

The 'DIP' adjustment allows some control over the generator voltage dip upon the application of load.

This feature is mostly used when the generator is coupled to turbo-charged engines with limited block load acceptance, and operates only when the speed is below the UFRO knee point, (LED illuminated).

With the 'DIP' control fully anti-clockwise the generator voltage characteristics will follow the normal V/Hz line as the frequency falls below nominal.

With a more clockwise setting, the slope of the V/Hz line will be increased until the rate of engine falling speed recovers.

Turning the 'DIP' control clockwise provides greater voltage dip allowing easier engine recovery.

DROOP ADJUSTMENT

Generators intended for parallel operation are fitted with a quadrature droop C.T. which provides a power factor dependent signal for the AVR. The C.T. is connected to S1, S2 on the AVR.
The DROOP adjustment is normally preset in the works to give 5% voltage droop at full load zero power factor (cos Ø).

Clockwise increases the amount of C.T. signal injected into the AVR and increases the droop with lagging power factor.

If a three phase sensing unit is fitted, droop adjustment is made on this seperate unit.

With the control fully anti-clockwise there is no droop.

TRIM ADJUSTMENT (V/TRIM)

An auxiliary input is provided to connect to the VPF controller, (A1,A2). It is designed to accept dc signals up to +/- 5 volts.

The dc signal on this input adds to or subtracts from the AVR sensing circuit, depending on polarity.

The V/Trim control allows the user to adjust the sensitivity of the VPF controller.

With V/Trim fully anti-clockwise the VPF controller has no effect. Clockwise it has maximum effect. Normal setting is fully clockwise.

OVER EXCITATION (EXC TRIP) ADJUSTMENT

The adjustment is set and sealed in the works and should not be altered.

An over excitation condition is indicated on the common red LED which also indicates underspeed running.

The generator must be stopped to reset an over excitation trip.

NEWAGE INTERNATIONAL LIMITED

Newage Limited, The Jefferson Building, PO Box 346, 106 Chesley Drive, 2nd Fl., Media, Pennsylvania 19063 USA.
Telephone: (1) 610 565 8681. Fax: (1) 610 565 9413

PRINTED IN ENGLAND

MAGNAMAX®
VOLTAGE REGULATOR

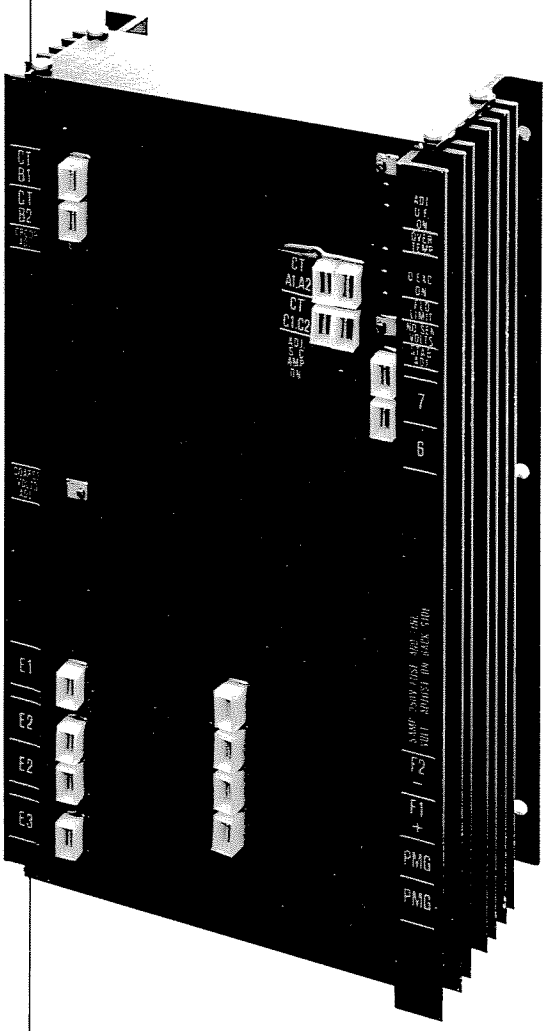

TECHNICAL MANUAL FOR MODELS PM100 AND PM200

MARATHON® ELECTRIC
WAUSAU, WISCONSIN 54401

TABLE OF CONTENTS

Section

1 INTRODUCTION

General Description
Specifications
Features

2 THEORY OF OPERATION

Main Regulator
Protective Features
Paralleling Circuit

3 INSTALLATION

Mounting
Interconnections

4 ADJUSTMENTS AND STARTUP PROCEDURES

General
Voltage Adjust
Stability Adjust
Underfrequency Adjust
Droop Adjust
Generator Current Limit Adjust (Model PM200 only)
Adjustments

5 TROUBLESHOOTING

6 FIELD APPLICATION

Manual Voltage Control
Var-Power Factor Controller

7 DRAWINGS AND DIAGRAMS

MagnaMAX Voltage Regulator

Back View

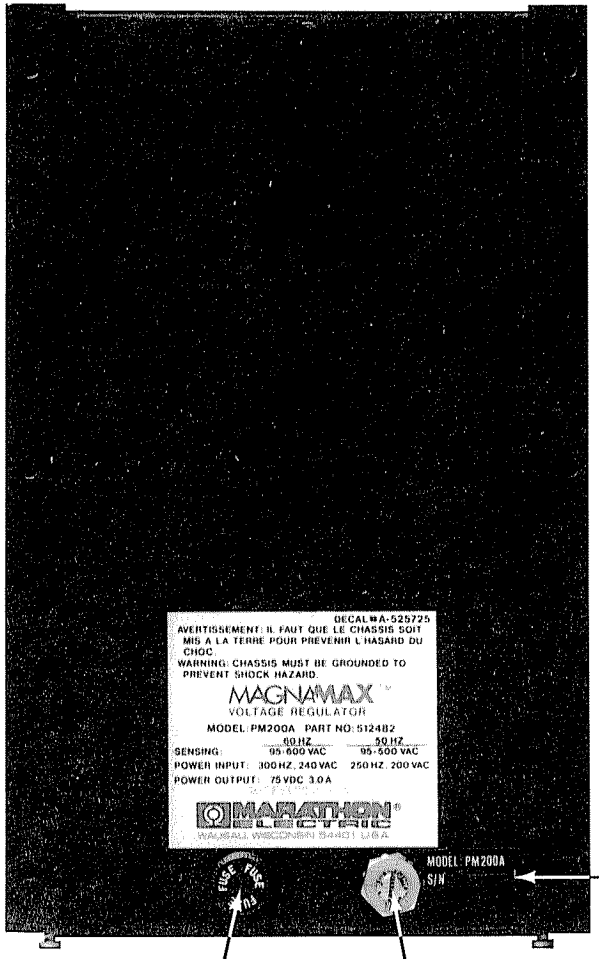

Front View

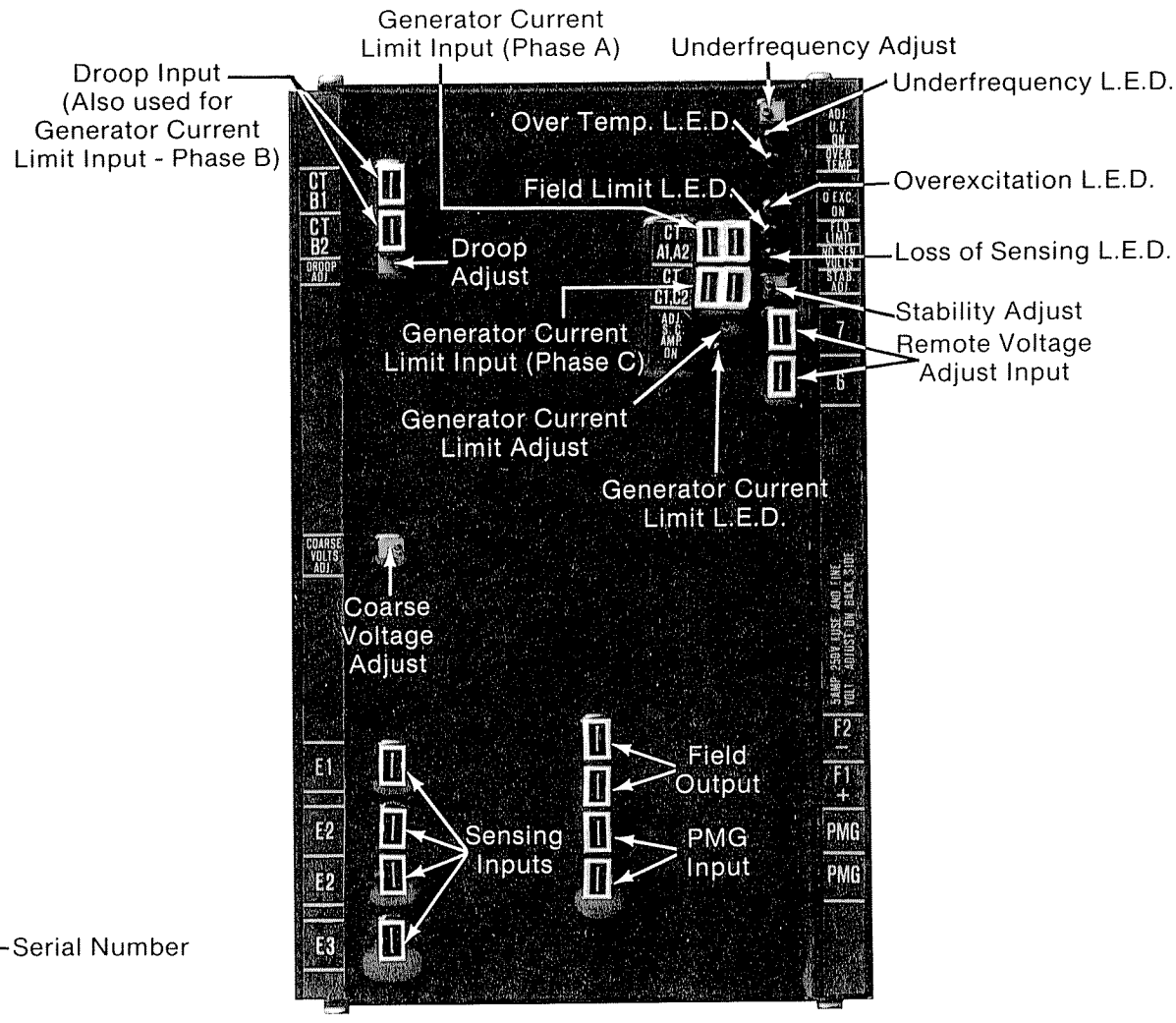

Fig. 1

INTRODUCTION

GENERAL DESCRIPTION

The MagnaMAX Voltage Regulator is a sealed electronic voltage regulator which controls the output of a brushless ac generator by regulating the current into the exciter field. Unlike most regulators, the input power is from a multi-pole high frequency permanent magnet generator (PMG) incorporated within the main generator assembly.

SPECIFICATIONS

Sensing	60 Hz 95-600 Vac 50 Hz 95-500 Vac
Sensing Mode	RMS (Single or Three Phase)
Input Requirements	300 Hz 180-240 Vac 250 Hz 150-200 Vac
Output Power Continuous Max Forcing (1-min.)	 75 Vdc at 3.0 Adc 170 Vdc at 7.5 Adc
Nominal Hot Field Resistance	20-26 ohms
Regulation	0.5%
Regulator Response	Less than 10 milliseconds
Remote Voltage Adjust Current	Less than 10 milliamps
Operating Ambient Temperature	-40° C to +70° C
Storage Temperature	-40° C to +85° C
Voltage Drift with Temperature	Less than 0.5% over a 40° C change
Size	9.5L x 6.0W x 3.2H (24.1cm x 15.2cm x 8.13cm)
Weight	5.5 Lbs. (2.5 Kg)
Fuse Size and Type	.25 x 1.25 5-amp Littelfuse 314005 or Bussman ABC-5
Power Dissipation	12 watts (continuous) 22 watts (forcing)

FEATURES

Sensing Voltage

The voltage regulator is equipped for either 3-phase or 1-phase sensing. The sensing voltage is continuously adjustable over the entire voltage range with the 15 turn coarse voltage adjust control (Figure 1). The single turn fine voltage adjust control gives a minimum of ±10% voltage variation at any setting of the coarse adjust. A 10,000 ohm optional remote rheostat can be added. This remote rheostat can also give a ±10% variation independent of the coarse adjust setting.

Loss of Sensing

If an open circuit occurs in one of the sensing leads (or if the E2-E3 Jumper is not properly connected when using single phase sensing), the regulator will turn off and the loss of sensing LED will turn on (Figure 1). At this time, the generator output voltage will go to residual. The regulator will automatically reset when proper sensing is restored. This loss of sensing circuit will **not** activate under a generator short circuit condition but rather the regulator will turn to its full forcing capabilities for a minimum of 10 seconds for fault clearing.

CAUTION: Whenever a potential transformer is used for sensing, a break on the primary side of the transformer will cause maximum forcing from the regulator, and the loss of sensing circuit will not activate.

Underfrequency

The underfrequency control (Figure 1) changes the regulator's mode of operation. When not operating in the underfrequency mode, the regulator has a flat regulation, constant voltage over a frequency range. When operating in the underfrequency mode, the regulator has a constant volts per hertz characteristic (a linear relationship of voltage with respect to frequency). The transition frequency is adjustable from 40 Hz to 70 Hz (Figure 2A, 2B, and 2C for typical volts/hertz characteristics).

Katolight Service - Master Repair Manual - Page 1511

SECTION 1

Underfrequency Operation

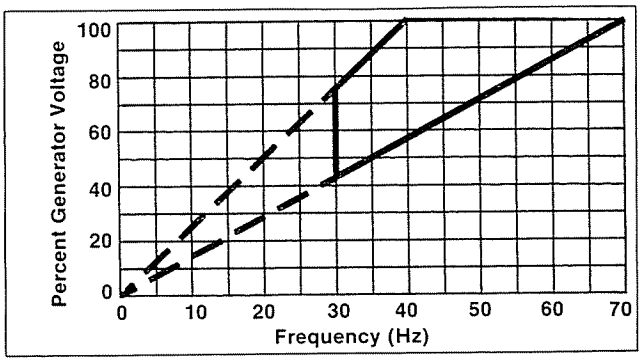

Fig. 2A

Typical 60 Hz Operation

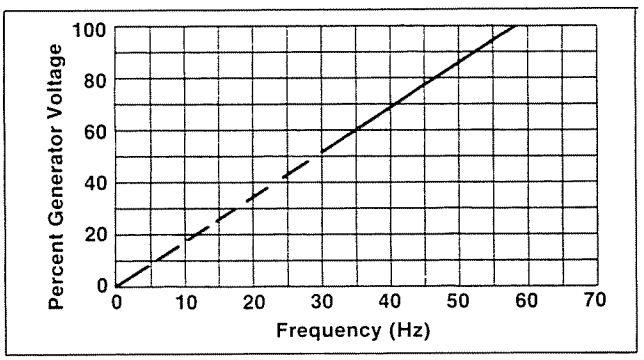

Fig. 2B

Typical 50 Hz Operation

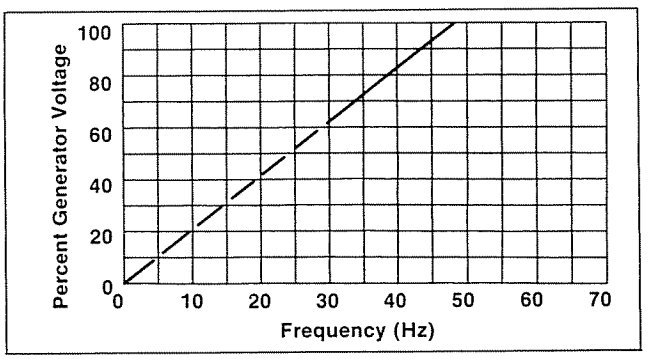

Fig. 2C

Overexcitation

The overexcitation circuit senses when the regulator output voltage is above a set level. If this voltage remains above that level, the overexcitation LED (Figure 1) will turn on and a protective function with an inverse time characteristic turns the regulator off. The generator voltage will go to a residual level and the overexcitation LED (Figure 1) will remain lit. The generator must be stopped or input power must be removed for a minimum of 10 seconds to reset the circuit and restore normal operation.

Paralleling

Provisions are included in the regulator to allow paralleling using either reactive droop or reactive differential (cross current) compensation with the addition of an external 5 amp, 5 VA current transformer.

Overtemperature Protection

The regulator will turn itself off before it is damaged by overheating. This will occur at an ambient temperature in excess of 70° C. The generator voltage will go to a residual level and both the overtemperature LED and the field current limit LED (Figure 1) will turn on and remain lit. When the regulator cools it will automatically return to normal operation.

Field Current Limit

The regulator output is current limited. Should a heavy current load or short circuit occur across the field output terminals (Figure 1) the regulator switches to a current limit condition and the field limit LED (Figure 1) will turn on. The limiting circuit automatically resets itself when the output current drops below the current limit set point. This current limit set point is **not** adjustable.

Generator Current Limit (Model PM200 Only)

The generator current limit is designed to control the maximum short circuit current that will be sustained by the generator (Figure 1). Current sensing is through external 5 amp, 5 VA current transformers. Depending upon the current transformer ratio, the regulator will limit the generator current from about 150% to about 400%.

Katolight Service - Master Repair Manual - Page 1512

Isolation is provided on the regulator inputs so any conventional current transformer interconnections typically used in meter panels or switchgear are acceptable.

For adjustment procedures on these features, see Adjustments and Startup Procedures.

Environmental Protection

The MagnaMAX Voltage Regulator is a totally encapsulated design to limit application problems even in harsh environments. The ability of the regulator to withstand harsh environments has been illustrated through hundreds of hours of salt fog tests (ASTM B117-73), humidity tests (MIL-STD-705B Method 711-1C), thermal cycles (-40° C to +70° C), shock tests (5 G's in all three planes), and vibration tests (.035 in. at 20-60 Hz).

EMI Suppression

The standard PM100/200 regulator meets MIL-STD-461B part 9 for conducted and radiated emissions when mounted in the generator conduit box.

Katolight Service - Master Repair Manual - Page 1513

SECTION 2

MAIN REGULATOR

There are four basic function blocks to the MagnaMAX Voltage Regulator. These blocks are the sensing input circuit, the main summing amplifier, the pulsed driver circuit, and the power output switching circuit (Figure 3A).

PM100/200 Block Diagram

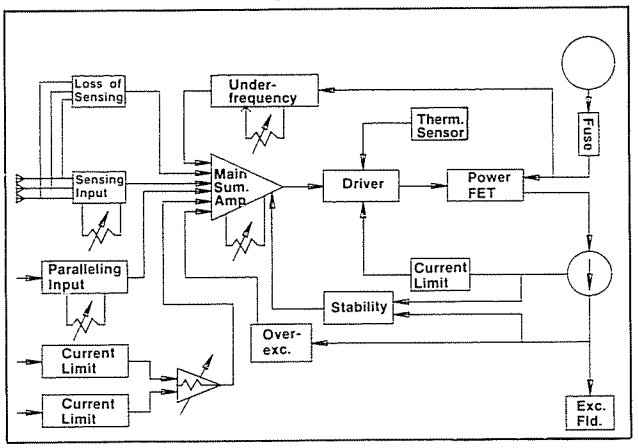

Fig. 3A

The generator voltage is fed into a circuit that calculates the RMS value of the incoming signal. The magnitude of the output is controlled by a feedback resistor. The output signal varies as this feedback resistor is adjusted. This adjustable feedback resistor is the coarse voltage adjust.

The output from the sensing circuit is then fed to the main summing amplifier. As the name implies, signals from the protective circuits, as well as the external fine voltage adjust and the remote voltage adjust are combined at this point. This combined signal is then passed to the driver circuit.

The driver circuit converts the signal from the main summing amplifier to gate pulses that control the output power FET (Field Effect Transistor).

The power FET controls the current to the exciter field. The longer the pulse to the gate of the FET, the greater the generator output voltage. Conversely the shorter the pulse to the gate of the FET, the shorter the current pulse to the exciter field and the lower the generator voltage.

These four circuits are tied together with one feedback circuit to make the regulator self-controlling. This is the function of the stability circuit. The stability circuit senses both exciter field current and exciter field voltage. The adjustable signal output is fed back to one of the inputs of the main summing amplifier. As load is applied, the generator voltage tends to decrease. The stability circuit increases the control signal thereby increasing the exciter field current and the output voltage. As the generator voltage increases, the stability circuit decreases the feedback signal. Adjusting the stability control changes the response time of the regulator thereby obtaining the best match for any particular generator (Figure 3B).

Transient Voltage Response with Various Stability Settings

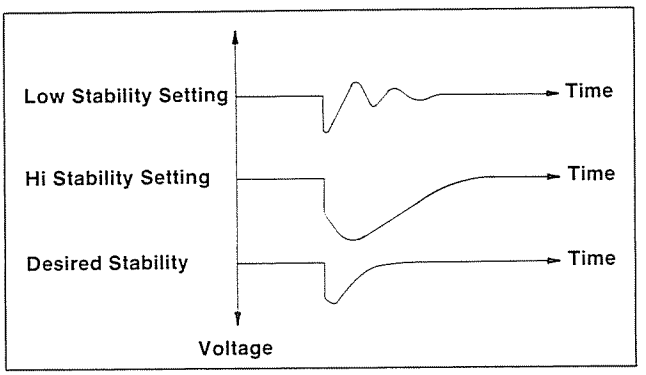

Fig. 3B

PROTECTIVE FEATURES

There are six protection features (Figure 3A): (1) loss of sensing, (2) underfrequency, (3) overexcitation, (4) overtemperature, (5) field current limit, and (6) generator current limit (model PM200 only).

1. The loss of sensing circuit monitors continuity in the sensing leads. If any of these leads should open an LED is lit and a signal is sent to the main summing amplifier which turns the regulator off. Reconnecting the sensing lead will automatically reset the regulator and restore normal operation.

2. The underfrequency circuit operates when the generator frequency drops below the adjustable set point (See Adjustments and Startup Procedures for proper adjustment). An LED is lit and a voltage signal proportional to frequency is sent to the main summing amplifier.

Katolight Service - Master Repair Manual - Page 1514

3. The overexcitation circuit monitors the regulator output voltage. If this voltage exceeds a preset value an LED turns on and a timer starts to operate. After the timeout period, a signal is sent to the main summing amplifier to turn the regulator off. Input power must be disconnected from the regulator or the generator must be shutdown for a minimum of 10 seconds to reset the circuit.

4. The regulator has a thermal sensor which monitors temperature. When the ambient temperature is in excess of 70° C the regulator turns off. The regulator is automatically reset when the ambient temperature drops below 70° C.

5. Output current is continuously monitored by the field current limit circuit. When it reaches the preset point or tries to exceed this level, pulses are sent to the driver which limits this output current. Normal operation is resumed when the output current drops below the present value.

6. The generator current limit circuit (available on PM200 models only) receives a signal from three generator current transformers (See Figure 1 for location of input terminals and adjustment control). (The paralleling terminals are the inputs for one of the current transformers.) Each current signal is converted to a voltage signal and combined. Its composite is then sent to the main summing amplifier. The amount of control signal is determined by the setting of the current limit adjustment (See Section 4 for proper adjustment).

PARALLELING CIRCUIT

The paralleling input requires a current signal from a 5 amp 5 VA current transformer. The current signal is converted to a voltage signal, amplified, and feed into the RMS sensing circuit. The gain control of the voltage amplifier is the droop adjustment. (For instructions on connecting the paralleling circuit see Section 3.)

Katolight Service - Master Repair Manual - Page 1515

SECTION 3

MOUNTING

The MagnaMAX Voltage Regulator is normally located in the generator conduit box, but is also designed to operate in remote switchgear cabinets with convection cooling. It is equiped with two sets of mounting holes. The first set is located on the back of the regulator. These are the normal mounting holes for mounting in the generator conduit box or when the box panel assembly is moved to a remote site. If the regulator is to be remote mounted in the switchgear or auxiliary control enclosures, the second set of mounting holes can be used. This leaves both sides of the regulator accessable. (See Figure 4A and 4B for mounting hole dimensions.)

WARNING

THE REGULATOR CHASSIS MUST BE PROPERLY CONNECTED TO A SUITABLE POWER SYSTEM GROUND TO PREVENT THE POSSIBILITY OF ELECTRICAL SHOCK HAZARD.

The environmental protective anodizing on the regulator case is an insulator, therefore, when mounting the regulator a secure ground must be established. One method of establishing this ground is to mount the regulator using lock washers that pierce the anodizing and connect a wire from the regulator case to the power system ground.

Normal Mounting Hole Pattern

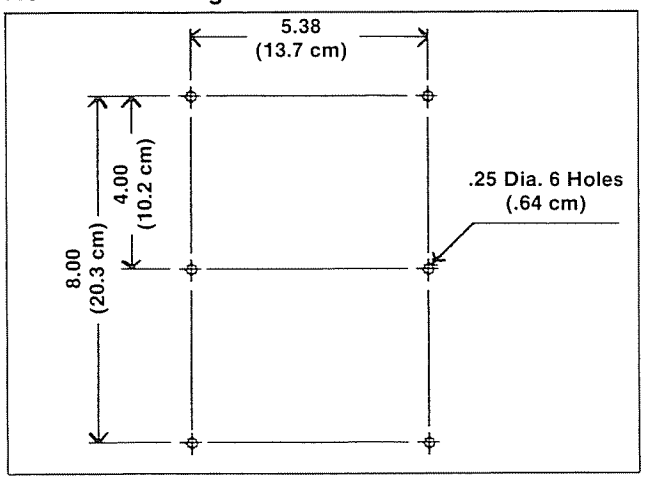

Fig. 4A

CAUTION: DO NOT megger or hi-pot the generator with the regulator connected. DO NOT megger or hi-pot the regulator.

The regulator can be mounted in any of the three planes. However, it is recommended that the regulator be mounted with the heatsink fins in the vertical plane.

Side Mounting Hole Pattern

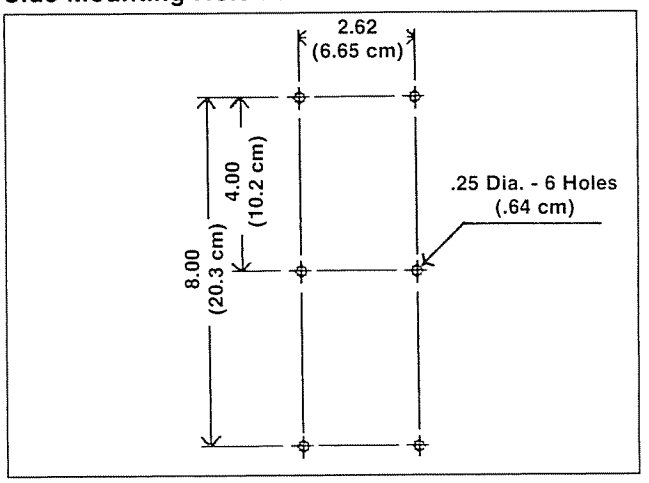

Fig. 4B

INTERCONNECTIONS

For typical wiring diagrams see the **Outline Drawings and Diagrams** (Section 7).

CAUTION: For use on generators with outputs greater than 600 V, an external potential transformer must be used for voltage sensing.

Whenever a potential transformer is used for sensing, a open circuit on the primary side of the transformer will cause maximum forcing from the regulator, and the loss of sensing circuit will not activate. Assure that all connections on the primary side of the transformer are tight and secured from possible vibration.

Remote Voltage Adjust

If a remote voltage adjust is required, use a 10,000 ohm, 1-watt potentiometer (1-watt is the minimum power requirement needed, however, to minimize the effect of vibration, a 25-watt rheostat is recommended). Remove the jumper from terminals 6 and 7 and connect the remote voltage adjust to these terminals. This connection should be made using two conductor non-shielded moderately twisted pair cable of wire gauges 18-22. The remote voltage adjust cabling should be kept separated from any power or sensing leads. For applications where the remote voltage adjust will be mounted at distances greater than 35-feet from the regulator, it is recommended that the complete regulator be remotely mounted. As an alternate, the installation of a potential transformer in the regulator sensing circuit, extends this distance beyond 150 feet. Finally, a motorized potentiometer can also be used.

Note which terminal is connected to the wiper arm. If this is reversed, the remote control will function backwards.

Sensing Voltage

The MagnaMAX Voltage Regulator comes equipped for 3-phase sensing as standard. It can optionally be used with single phase sensing by connecting the generator sensing voltage to terminals E1 and E2 and installing a jumper from the second terminal E2 to terminal E3.

Power Output

The power output terminals of the regulator are labeled as F1+ and F2-. These therminals are connected to the F1 and F2 generator leads respectively. DO NOT ground either one of the field leads.

Power Input

The two power input terminals of the regulator are labeled PMG. The leads of the Permanent Magnet Generator are connected to these terminals. DO NOT ground either one of the PMG leads.

WARNING

THE VOLTAGE REGULATOR POWER OUTPUT TERMINALS (F1+ AND F2-) SHOULD NEVER BE DISCONNECTED DURING OPERATION. THIS CAN RESULT IN PERMANENT DAMAGE TO THE REGULATOR. IF A REGULATOR POWER SWITCH IS DESIRED, IT SHOULD BE PLACED AT THE POWER INPUT TERMINALS.

Paralleling Input

The MagnaMAX Voltage Regulator comes with paralleling provisions. The paralleling input terminals are labeled CTB1 and CTB2. If paralleling is desired, connect the leads from a standard 5 amp 5 VA current transformer to these input terminals.

The standard MagnaMAX generator phase rotation is C-B-A with CCW rotation when facing the conduit box or opposite drive end. For C-B-A generator phase rotation the connection is as follows:

With three phase sensing, connect generator sensing lead
- T1 to regulator terminal E1,
- T2 to regulator terminal E2, and
- T3 to regulator terminal E3.

With single phase sensing, connect generator sensing lead
- T1 to regulator terminal E1,
- T3 to regulator terminal E2, and
- jumper regulator terminal E2 to regulator terminal E3.

For either of the above sensing connections, the paralleling transformer must be in the generator T2 lead with the H1 towards the generator and the X1 connected to the regulator CTB1 terminal.

Note: If a different phase rotation is desired, it is recommended that the regulator CT connections be made as stated above and the phase rotation change be performed beyond these connections.

CAUTION: The polarity and phasing of the current transformer and sensing connections must be observed or improper operation will result. (Refer to Section 7 for typical connections.)

SECTION 3

To determine if the paralleling function is operating properly, see Section 4.

If a unit paralleling or CT shorting switch is used, a 0.1 ohm, 10 watt resistor must be placed in series with the lead to the CTB1 terminal. See Section 7-Drawings & Diagrams for the typical connection of this resistor.

The current transformer used for paralleling can also be used for generator current metering.

Generator Current Limit

The PM200 model voltage regulator is equipped with generator current limit. There are four input terminals for this. Two are labeled CTA and two are labeled CTC. Connect a standard 5 amp 5 VA current transformer located in phase A to the CTA1 and CTA2 terminals and a transformer located in phase C to the CTC1 and CTC2 terminals. Observing polarity is not necessary with these connections. The remaining input terminals are the paralleling terminals mentioned above. The current transformers used here can also be used for generator current metering and paralleling.

Field Flashing

The MagnaMAX Voltage Regulator is powered by a permanent magnet generator therefore field flashing is neither required or necessary.

Katolight Service - Master Repair Manual - Page 1517

ADJUSTMENTS & STARTUP PROCEDURES

NOTE: Read and understand this section completely before attempting any adjustments and starting the generator. If the adjustments do not produce the specified results, proceed to the "Troubleshooting" section.

GENERAL

Below is a listing of the adjustments associated with the MagnaMAX Voltage Regulator and the number of turns required to traverse the full range of the control. The multi-turn controls have slip clutches in them to prevent damage by overrotation.

Control	Turns
Coarse Voltage Adjustment	15
Fine Voltage Adjustment	1
Stability Adjustment	15
Underfrequency Adjustment	15
Droop Adjustment	15
Current Limit Adjustment (PM200 only)	15

SECTION 4

Before starting the generator, the following adjustments should be made:

Control	Setting
Coarse Voltage Adjustment	Full CCW
Fine Voltage Adjustment	Full CW*
Remote Voltage Adjustment (if used)	Mid Point
Stability Adjustment	Full CW
Underfrequency Adjustment	Full CCW
Droop Adjustment	Full CCW
Current Limit Adjustment (PM200)	Full CCW

*If a remote voltage adjustment is not used, set the fine voltage adjustment to the mid point of its range and install a jumper between terminals 6 and 7.

Because generator stability is most noticeable when monitoring field voltage, connect a 50V DC voltmeter to the regulator output terminals F1 and F2. Be sure to observe polarity. F1 is positive and F2 is negative. If a DC voltmeter is not available, an alternate method of monitoring stability is to observe generator output voltage.

Connect an ac voltmeter of proper size to the generator output leads.

Start and run the generator at **no load** and **rated speed.**

VOLTAGE ADJUSTMENTS

There are three possible voltage adjustment points on the MagnaMAX Voltage Regulator. The large single turn, regulator mounted, voltage adjust control is for fine adjustments in generator output voltage. Turning this control clockwise will increase the output voltage. The range is ±10% of the nominal voltage from the mid-setting. The miniature 15-turn voltage adjust control is used for coarse adjustments in generator voltage. Turning this control clockwise will increase the output voltage. The third adjustment can be an optional remote voltage control. (For proper sizing of this control, refer to the Section 3, Interconnections.) Turning this control clockwise will increase the output voltage. This adjustment can also give a ±10% variation in output voltage from a mid-setting.

Rotate the coarse voltage adjustment clockwise until the desired generator output is reached.

If a remote voltage adjust rheostat is used, the fine voltage adjust should be full CW. This will give a minimum ±10% variation in generator voltage with the remote adjust.

If finer control is desired, set the fine adjust to the minimum setting and reset the desired output with the coarse adjust. This gives approximately ±4% voltage adjustment with the remote adjust rheostat.

STABILITY ADJUSTMENT

The miniature 15-turn stability control adjusts the transient response time of the system (Figure 3B). Turning the stability control counter-clockwise decreases the level of stability which decreases the response time of the system. Turning the control clockwise increases the level of stability which increases the response time of the system. Generally the stability control should be adjusted as far counter-clockwise as possible while still maintaining the desired level of stability. This gives the best transient performance.

Turn the stability adjustment counter-clockwise until the instability is shown on the DC voltmeter (use the ac voltmeter on the generator output terminals if a dc voltmeter is not available). With the system operating in an unstable condition, slowly adjust the stability control in a clockwise direction until generator stability is reached. If the system is stable with control fully counter-clockwise, interrupt the regulator input power for a short time (approximately 1-2 seconds). If the system is still stable, futher stability adjustment is not needed.

Below is a chart of general stability settings for normal operation. The actual desired setting may vary depending upon specific applications.

Generator Frame Size	Setting From Full CCW
430 Frame Series	2-4 Turns
570 Frame Series	2-4 Turns
740 Frame Series	9-12 Turns

UNDERFREQUENCY ADJUSTMENT

The underfrequency control adjusts the frequency at which the regulator begins to operate on a constant volts/hertz ramp. Turning the control clockwise increases the set point frequency. Turning the control counter-clockwise decreases the set point frequency (See Figure 2B and 2C for typical 60 Hz and 50 Hz operation). As an example, when changing from 60 Hz operation to 50 Hz operation, the control must be adjusted counter-clockwise to lower the set point frequency to just below 50 Hz.

For normal underfrequency characteristics rotate the underfrequency adjustment clockwise until the underfrequency LED turns on. Rotate the control counter-clockwise until the LED just turns off and then rotate the control one quarter turn counter-clockwise further. If a longer flat voltage response is desired, every turn counter-clockwise will decrease the transition frequency about 8 hertz. (For 50 hertz transition adjustment is about 5 hertz per turn.)

If continuous operation on the volts/hertz ramp is desired, rotate the underfrequency control to the full clockwise position and increase the generator voltage with the coarse voltage adjust until the required voltage for that speed is obtained.

DROOP ADJUSTMENT

The droop adjustment is used when paralleling generators. Turning the droop control clockwise increases the amount of generator voltage droop with application of reactive load. A 5.0 amp signal into terminals CTB1 and CTB2 will give a minimum of 10% voltage droop with the application of 0.8 PF load and the control set to its full clockwise position.

The best way to set the droop is to run each generator individually and apply rated or near rated current at 0.8 PF. The amount of droop can then be adjusted directly.

If a reactive load is not available, there is an alternate method of adjusting the generator droop. With the droop CT installed in the generator T2 lead (as specified in Section 3). temporarily connect generator sensing lead

E1 to generator lead T2,
E2 to generator lead T3, and
E3 to generator lead T1.

If single phase sensing is used, temporarily connect generator sensing lead

E1 to generator lead T2,
E2 to generator lead T1, and
jumper regulator terminal E2 to regulator terminal E3.

Run each generator individually and apply rated or near rated current at unity PF. The amount of droop can now be set by adjusting the droop control as needed for the application.

If the droop adjustment does not cause the generator voltage to droop or decrease with application of load, recheck the CT polarity and sensing connections.

After the adjustments are complete, reconnect the regulator sensing leads as outlined in Section 3. When the generators are operated in parallel they will share load equally. If no reactive load is present, the generator voltage should not droop. If it does droop, recheck sensing connections, CT connections, and CT polarity. If necessary, repeat the adjustment procedure.

Figure 5 shows the number of turns required by the droop adjustment for a desired percentage droop with a given CT secondary current.

See Section 3 — INSTALLATION for proper connection of the droop circuit.

If the generator is not used in parallel operation, it is recommended that the droop control be set to its full counter-clockwise position.

Katolight Service - Master Repair Manual - Page 1519

Droop Adjustment

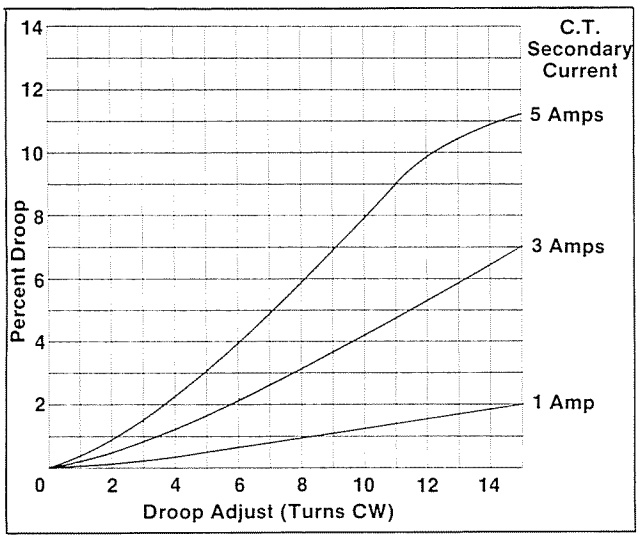

Fig. 5

SECTION 4

GENERATOR CURRENT LIMIT ADJUST (MODEL PM200 ONLY)

The generator current limit is designed to control the maximum short circuit current that will be sustained by the generator. Rotating the control clockwise will increase the amount of generator short circuit current. Depending on the current transformer ratio, the control will limit the generator current from about 150% to about 400%. The 400% limit is only achieved with a line-neutral or line-line single phase short. With a 3-phase symmetrical short, the built in regulator field current limit will control the short circuit to a level of 300% minimum to about 350% maximum.

To set the generator current limit, first determine the current transformer secondary current corresponding to the desired sustained fault current. This secondary current must be between 5 and 20 amps.

After the secondary current is known, refer to figure 6 for the proper number of turns of adjustment.

Armature Current Limit Adjustment

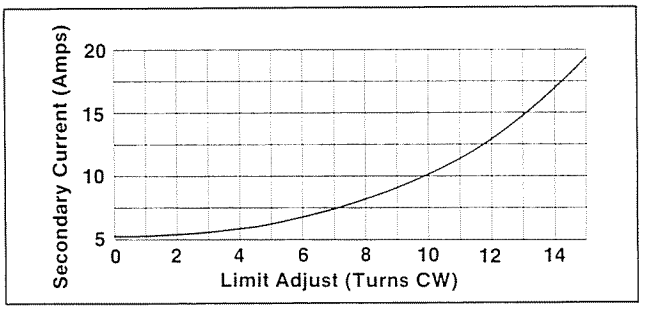

Fig. 6

Symptom	Cause	Action
Residual Voltage Output (No Buildup)	F1, F2 leads not connected.	Connect field leads F1, F2.
	PMG leads not connected.	Connect PMG leads.
	No PMG Voltage - Possible shorted 5uf capacitor or defective PMG. (Refer to generator manual for PMG replacement procedure.)	Check PMG Voltage. Nominally 180-190v with 5uf capacitor connected and 150-160v without 5uf capacitor connected.
	Fuse blown.	Replace fuse. (Littelfuse type 314005) or (Bussman type ABC-5)
	Generator not up to speed.	Increase generator speed. (Consult prime mover manual)
	Coarse Voltage Adjust turned full CCW.	Rotate coarse voltage adjust CW until desired voltage is reached.
	Overexcitation LED on.	Interrupt input power to regulator or shut down generator for a minumum of 10 seconds.
	L.O.S. LED on.	Loss of sensing. Check sensing leads - reconnect.
		PMG and/or field grounded. Check PMG and field connections to be sure neither circuit is grounded.
	Overtemperature LED on.	Regulator temperature too high. Increase cooling air to regulator or let ambient cool down.
	Faulty regulator.	Replace regulator.
	Defective generator.	Consult generator manual.
Output Voltage Low	Coarse Voltage Adjust turned down.	Rotate coarse voltage adjust CW until desired voltage is reached.
	Fine Voltage Adjust turned down.	Adjust control CW to desired output voltage.
	Remote Voltage Adjust turned down.	Adjust control CW to desired output voltage.
	Remote Voltage Control not connected or terminals 6 & 7 not jumpered.	Connect Remote Voltage Control or jumper terminals 6 & 7.
Voltage does not increase as Coarse Voltage is turned clockwise.	Fine Voltage Adjust turned down.	Adjust control CW to the desired setting.
	Remote Voltage Adjust turned down.	Adjust control CW to the desired setting.
Output Voltage High	Coarse Voltage Adjust turned too high.	Adjust control CCW to desired voltage.
	Fine Voltage Adjust turned too high.	Adjust control CCW to desired voltage.
	Remote Voltage Adjust turned too high.	Adjust control CCW to desired voltage.

SECTION 5

Katolight Service - Master Repair Manual - Page 1521

TROUBLESHOOTING

Symptom	Cause	Action
Poor Voltage Regulation	6-7 not jumpered.	Connect a jumper from 6-7.
	Shielded cable used for remote pot leads.	Remove connection from shield to frame.
	Interference on remote voltage adjust leads.	Isolate the remote voltage adjust leads from other power or sensing leads.
		Use smaller gauge wire. 18-22 gauge recommended.
		If Possible, shorten distance between remote pot and regulator to 35-feet or less, or remote mount regulator.
	Regulator not grounded.	Properly ground regulator.
	Field leads or PMG leads grounded.	Check field leads & PMG leads for continuity to ground. If grounded, remove ground connection.
Output Voltage High - No Adjustment	Faulty regulator.	Replace regulator.
Remote Voltage Control Operates Backwards.	Control wired backwards.	Reverse the wiring of the wiper arm on the remote voltage control.
Generator Voltage Hunting	Stability control not set properly.	Adjust stability control in a CW direction until hunting stops.
	Intermittent connection to PMG terminals.	Check wiring in PMG circuit.
	Intermittent connection to sensing terminals.	Check wiring in sensing circuit.
Underfrequency LED on.	Generator operating at reduced speed, or control adjusted incorrectly.	Readjust control CCW or increase speed of generator.
	Intermittent connection to PMG	Check wiring to PMG circuit.
Overexcitation LED on	Generator overloaded.	Reduce load to generator.
	Defective regulator.	Replace regulator.
Field Limit LED on. (Overexcitation LED may be on also.)	Regulator operating in field current limit mode.	Reduce load on generator.
		Check field leads for short.
		Check exciter field winding resistance - possible shorted turns. (See generator manual.)
		Check exciter armature winding resistance - possible shorted turns. (See generator manual.)
		Check rotating bridge rectifier - possible shorted diodes. (See generator manual.)
		Check generator field resistance - possible shorted turns. (See generator manual.

SECTION 5

Symptom	Cause	Action
No Droop Control or Negative Droop (Generator does not share load.)	Open connection to terminals CTB1 & CTB2.	Check connections of terminals CTB1 & CTB2 and paralleling current transformer.
	Droop transformer connected backwards.	Reverse connections to terminals CTB1 & CTB2.
	Paralling current transformer in wrong phase.	Refer to Sections 3 and 7 for proper installation.
	Sensing connections incorrect.	Refer to Sections 3 and 7 for proper sensing connections.
	Regulator defective.	Replace regulator.
Generator Current Limit LED on. (PM200 Models Only)	Generator overloaded.	Reduce load to generator.
Generator Fault Current Limited to Undesired Level.	Current limit control not set properly.	Readjust generator current limit control.
	Current transformers are of incorrect ratio for application.	Re-size current transformer ratio.

FIELD APPLICATIONS

MANUAL VOLTAGE CONTROL

The MagnaMAX Voltage Regulator is designed to operate with most comercially available manual voltage controls.

For typical operation of the regulator with a manual voltage control, refer to Marathon Electric.

VAR-POWER FACTOR CONTROLLER

The MagnaMAX Voltage Regulator is designed to operate with most comercially available var-power factor controllers.

For typical operation of the regulator with a var-power factor controller, refer to Marathon Electric.

SECTION 6

Katolight Service - Master Repair Manual - Page 1524

Remote Voltage Adjust Rheostat

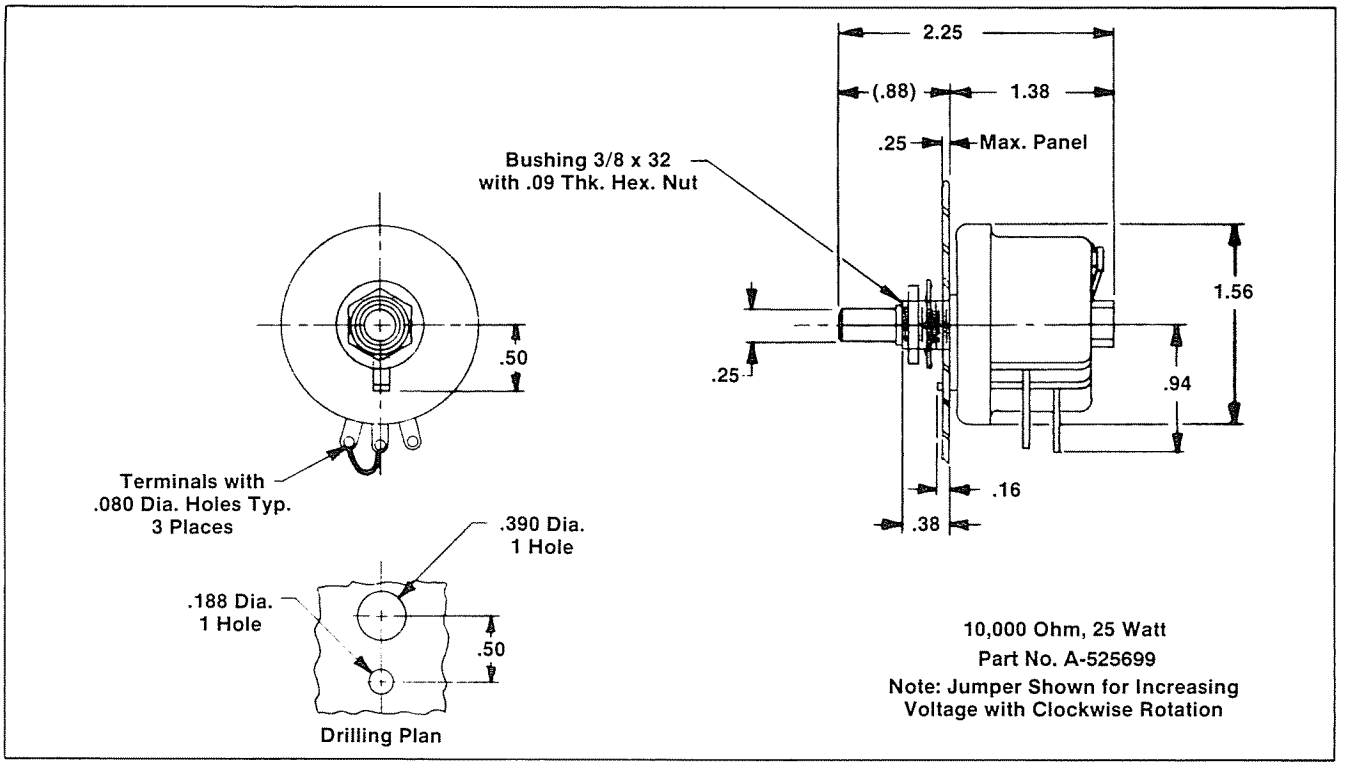

Paralleling Burden Resistor

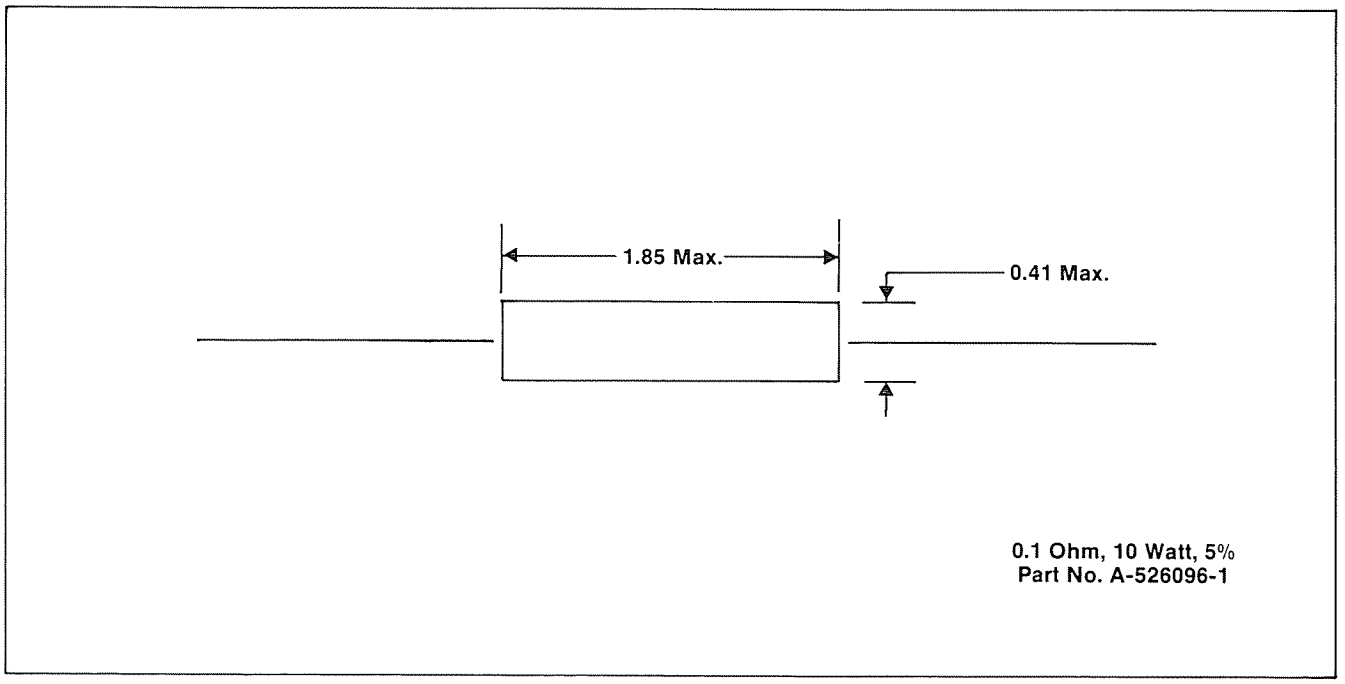

SECTION 7

Katolight Service - Master Repair Manual - Page 1525

DRAWINGS & DIAGRAMS

Outline Drawing of Regulator

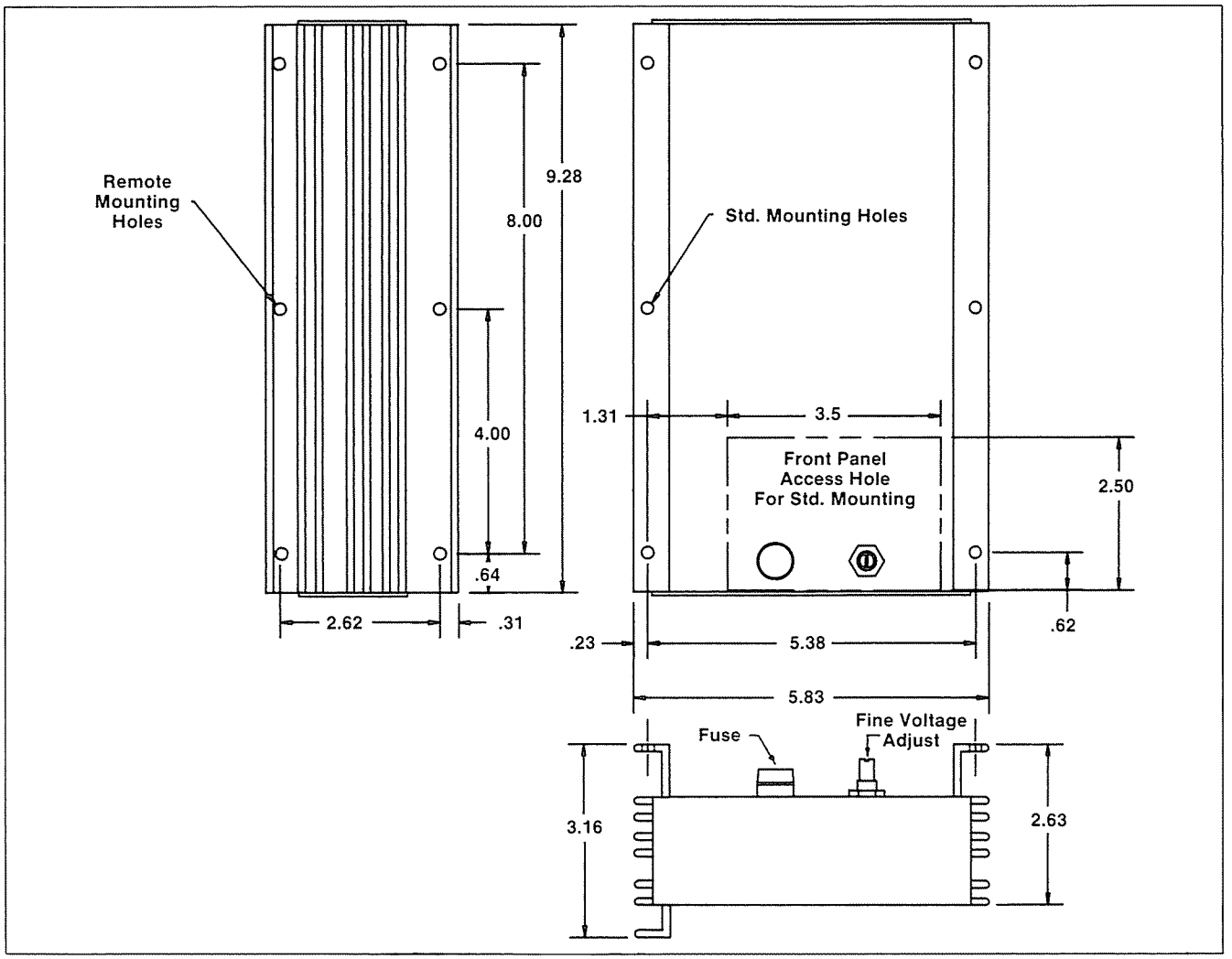

SECTION 7

Typical Connection - Three Phase Sensing (95-600 Volts)

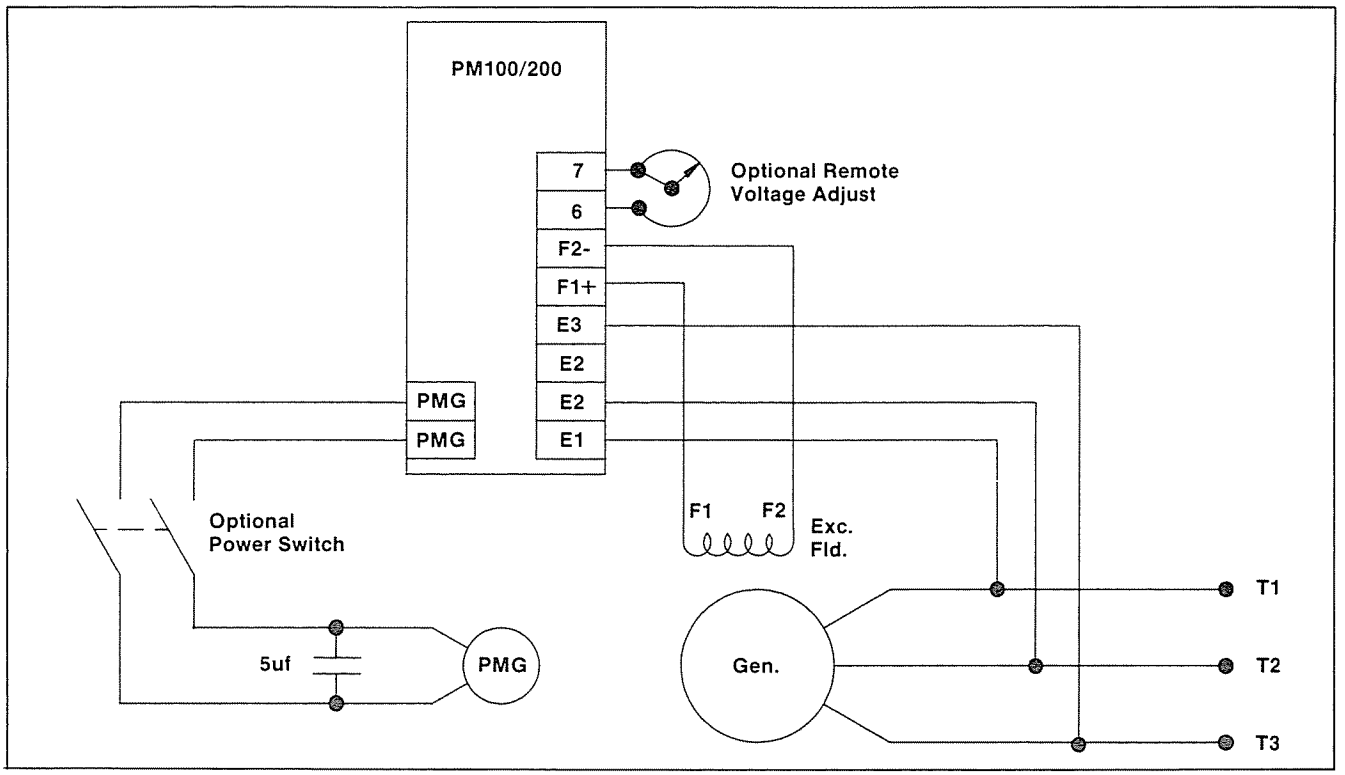

Typical Connection - Three Phase Sensing (95-600 Volts) with Reactive Droop Paralleling

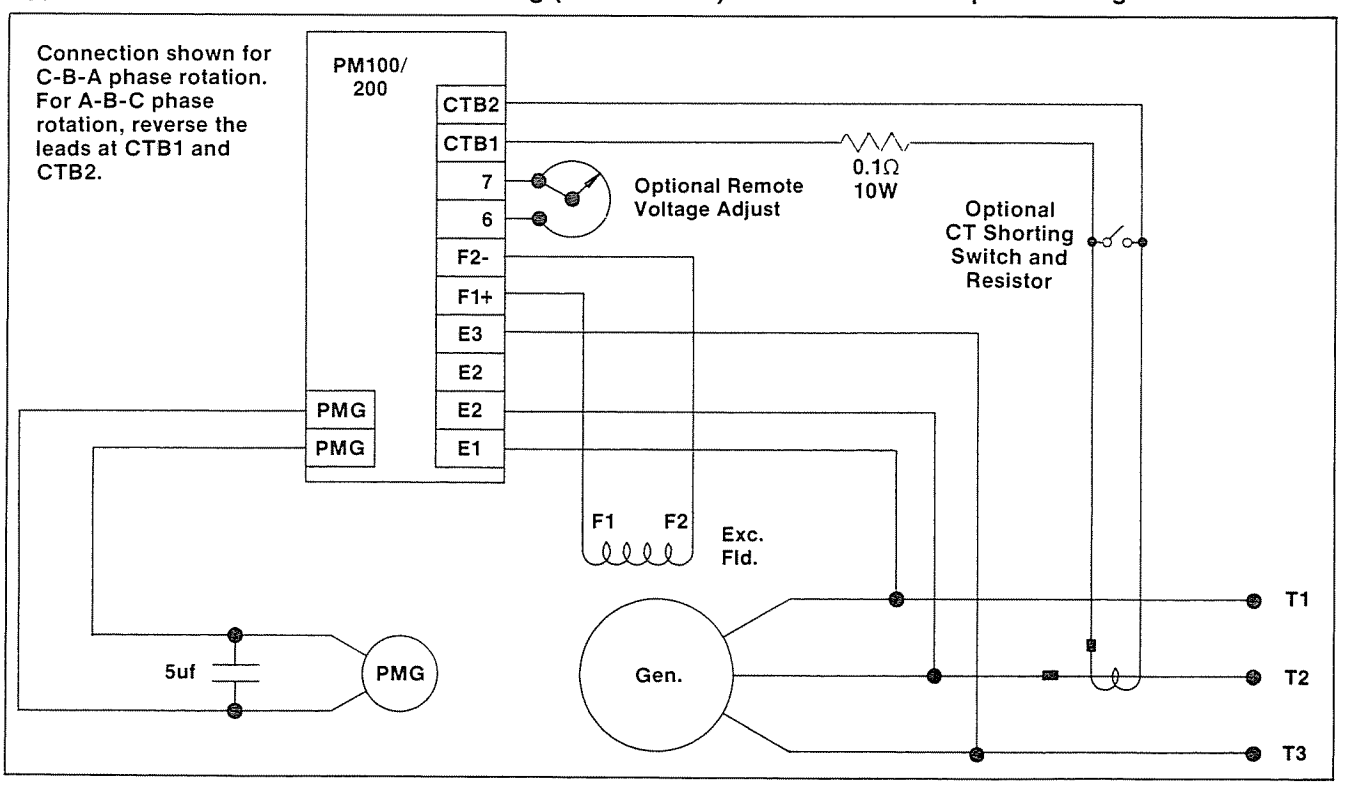

SECTION 7

DRAWINGS & DIAGRAMS

Typical Connection - Single Phase Sensing (95-600 Volts)

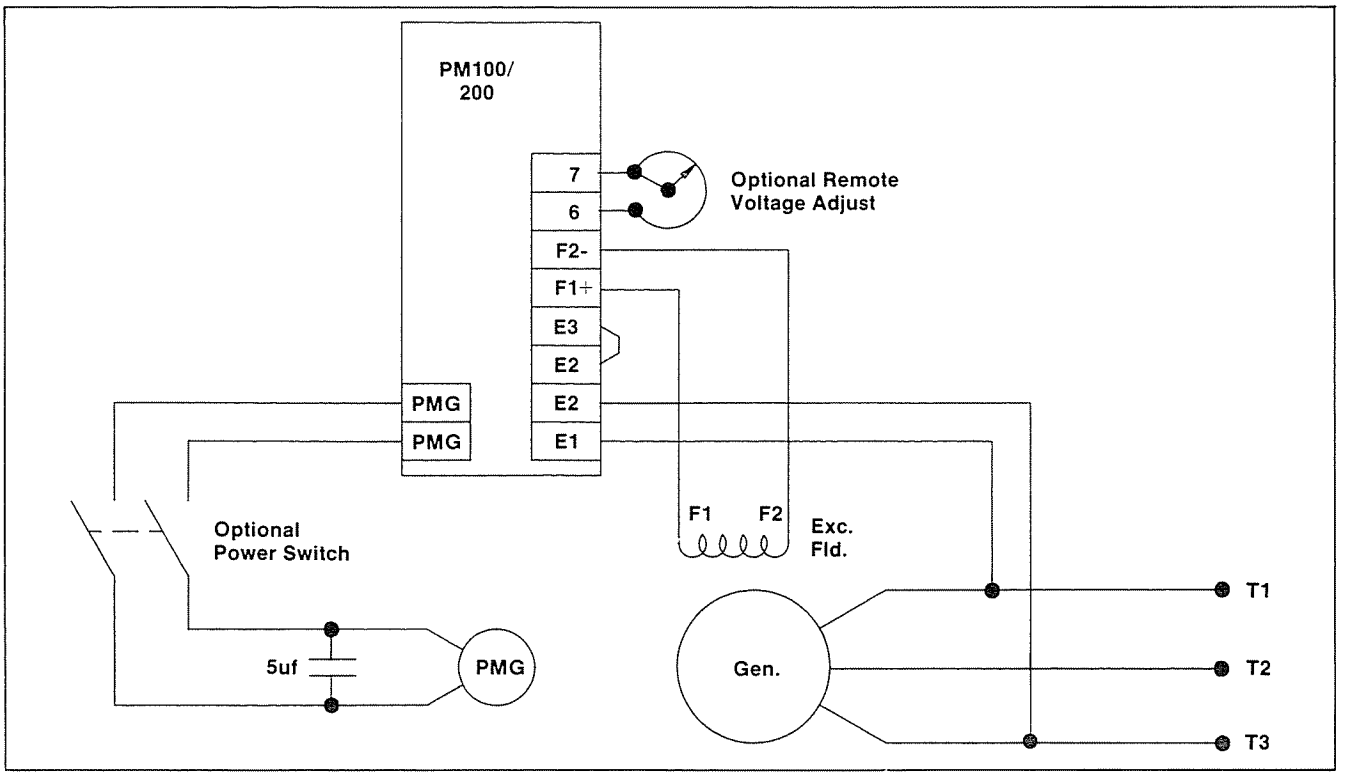

Typical Connection - Single Phase Sensing (95-600 Volts) with Reactive Droop Paralleling

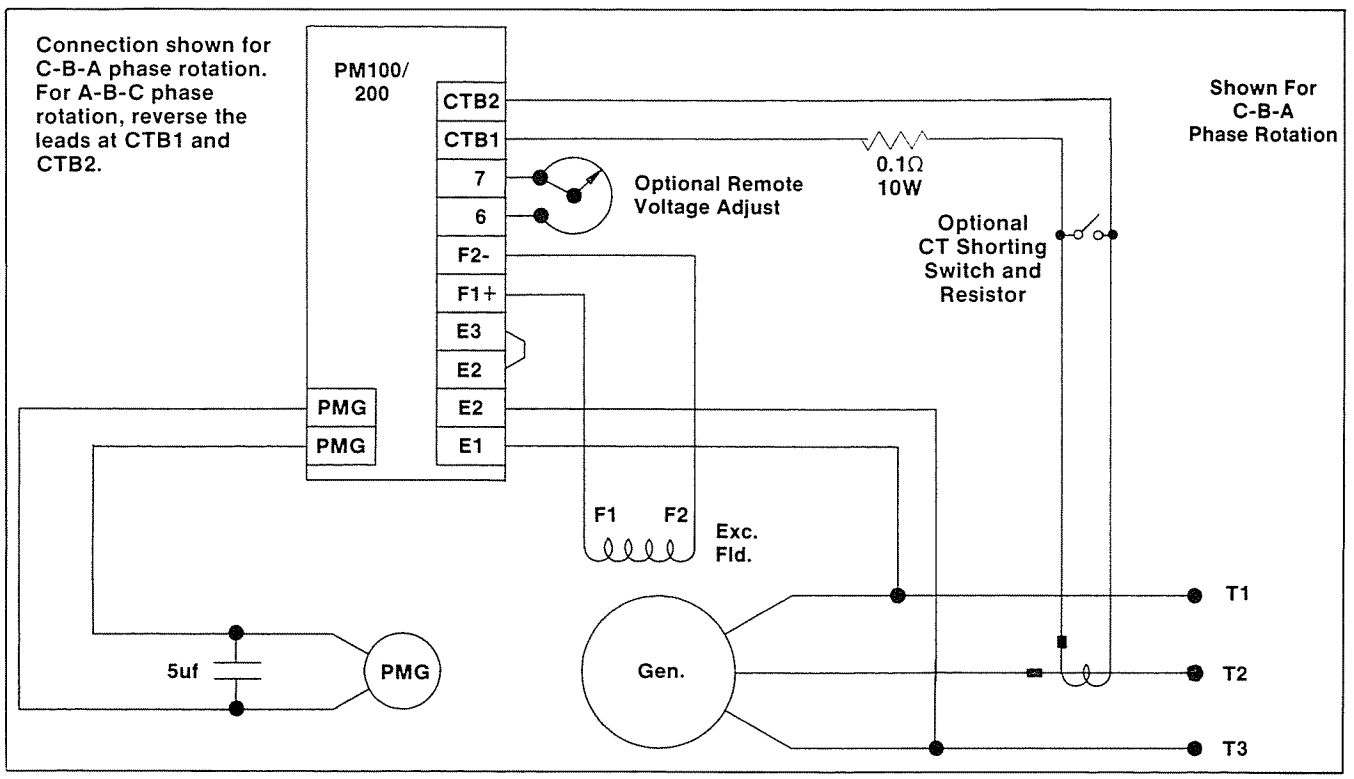

SECTION 7

Typical Connection - Three Phase Sensing (601-6600 Volts)

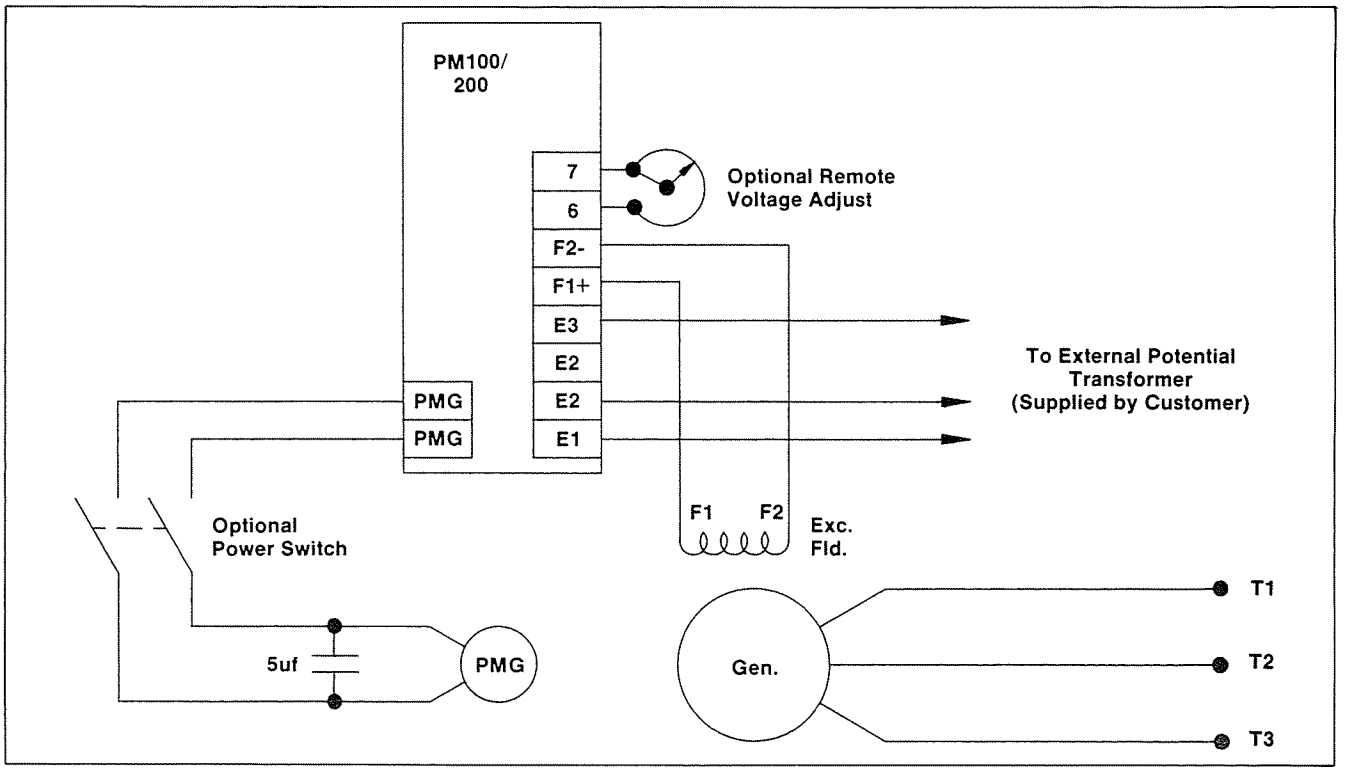

Typical Connection - Three Phase Sensing (601-6600 Volts) with Reactive Droop Paralleling

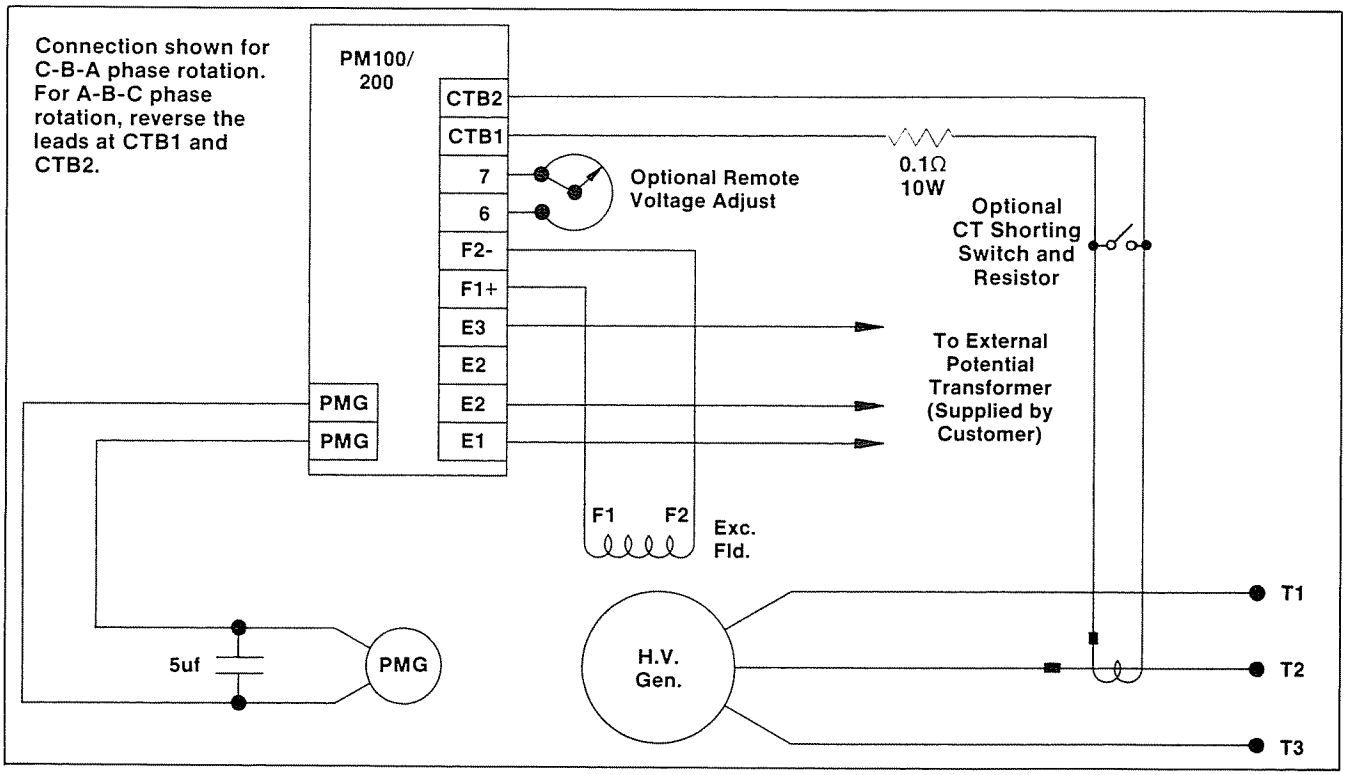

SECTION 7

Katolight Service - Master Repair Manual - Page 1529

Typical Connection - Three Phase Sensing (95-600 Volts) with Reactive Differential Paralleling

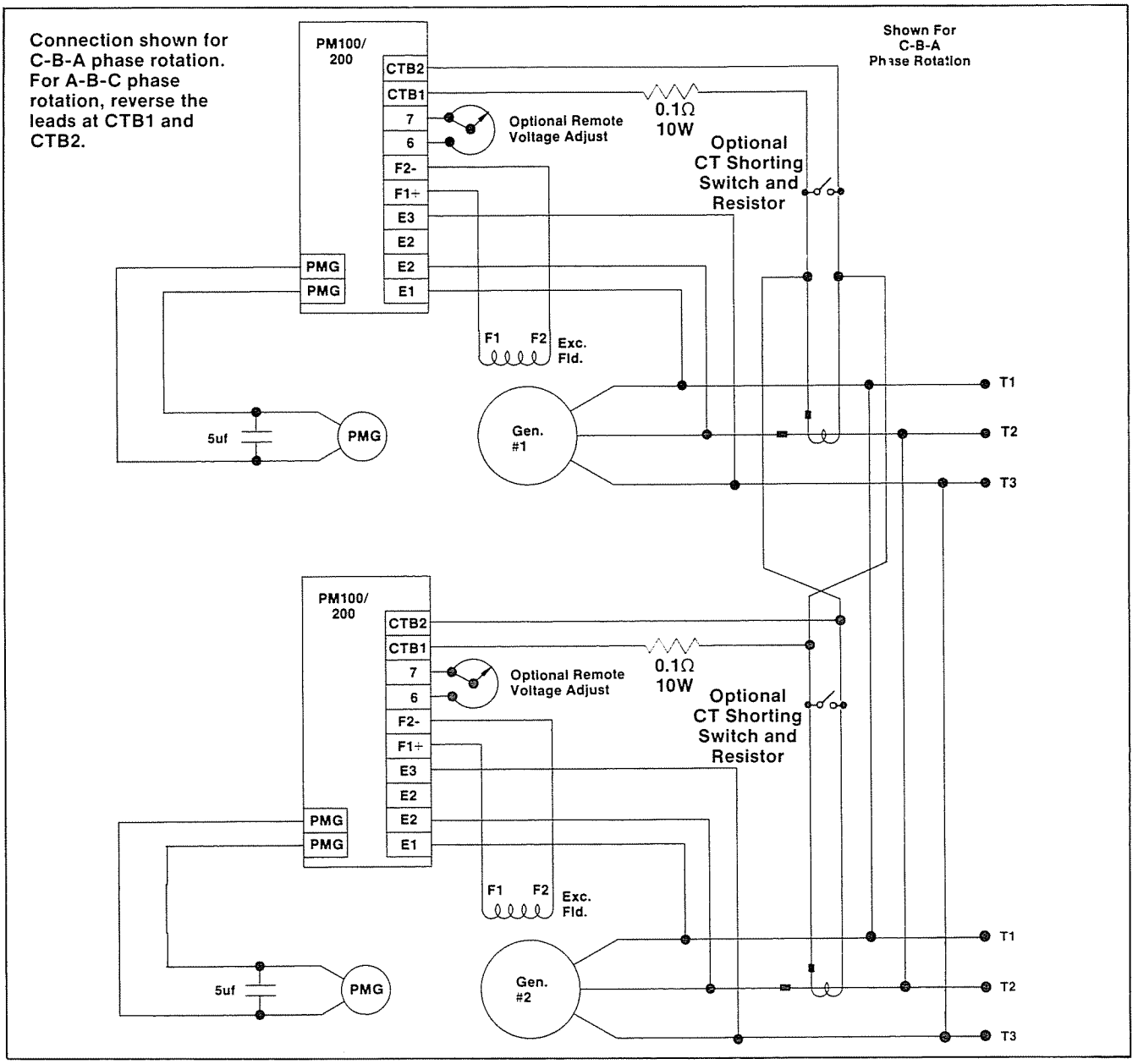

SECTION 7

Typical Connection - Three Phase Sensing (95-600 Volts) with Generator Current Limit

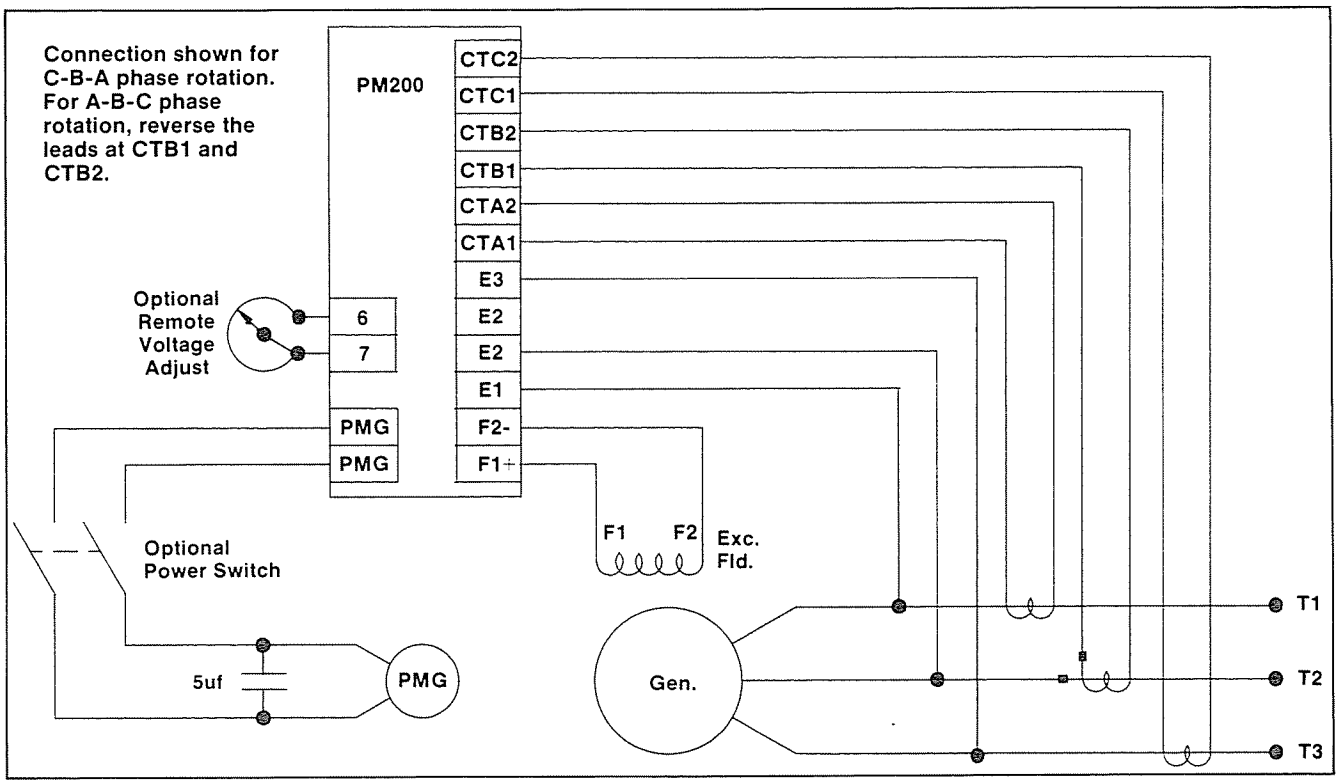

SECTION 7

Marathon Electric Mfg. Corp.
100 East Randolph Street
P.O. Box 8003
Wausau, WI 54402-8003
Phone: (715) 675-3311
TWX: 910-281-1521
Telex: 260175 ME WAS

MARATHON ELECTRIC
A Subsidiary of Regal-Beloit Corporation

**RUNS.
AND RUNS.
AND RUNS.
AND RUNS**



Litho in U.S.A.

GPN001 1/95

VOLTAGE REGULATOR

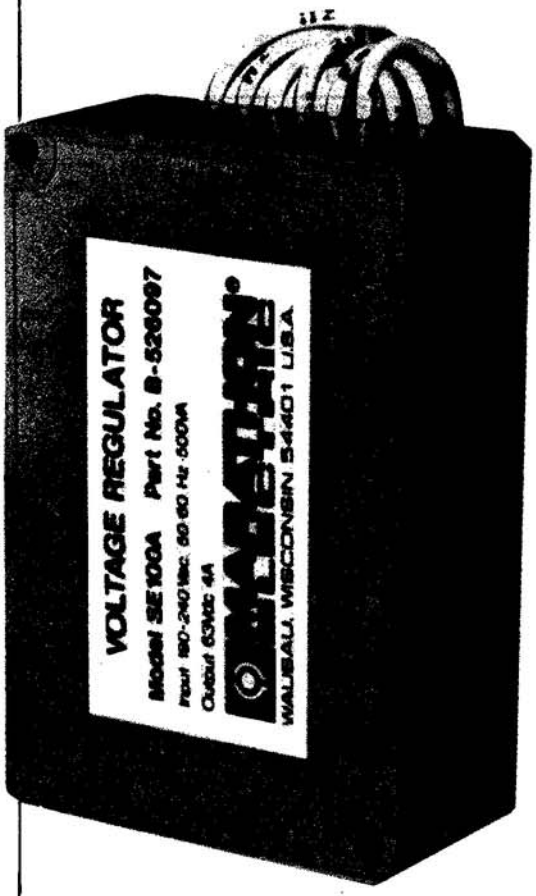

INSTRUCTION MANUAL FOR SE100A

Power System Solutions
KATOLIGHT®
CORPORATION

WARNING

TO PREVENT PERSONAL INJURY OR EQUIPMENT DAMAGE, ONLY QUALIFIED PERSONNEL SHOULD INSTALL, OPERATE, OR SERVICE THIS DEVICE.

CAUTION: DO NOT megger or high-pot the generator with the regulator connected. DO NOT high-pot the regulator.

INTRODUCTION

GENERAL DESCRIPTION

The SE100A voltage regulator is a sealed electronic voltage regulator which controls the output of a brushless ac generator by regulating the current into the exciter field.

SPECIFICATION

Sensing & Power Input	190-240 Vac 500VA
Output Power - Continuous	63 Vdc at 4 Adc (252w)
Output Power - Forcing (1-min)	105 Vdc at 7 Adc (735w with 240 Vac input power)
Regulation	1.0%
Exciter Field Resistance	15 ohms minimum 100 ohms maximum
Voltage Adjustment Range	171-264 Vac
Remote Voltage Adjustment Range	±10% with 1000 ohm rheostat ±5% with 500 ohm rheostat minimum 1/2 watt rated
Voltage Buildup	Internal provisions for automatic voltage build up from generator residual voltage as low as 10 Vac.
Overexcitation Shutdown	The regulator turns off when: The exciter field voltage exceeds 100±5 Vdc for a time inversely proportional to voltage or instantaneously if the exciter field voltage exceeds 135±5 Vdc.
EMI Suppression	Internal electromagnetic Interference filter (EMI filter).
Frequency Compensation	Roll-off at approx. 55 Hz at 60 Hz operation and 45 Hz at 50 Hz operation.
Operating Temperature	-40°C to +60°C
Storage Temperature	-65°C to +85°C
Power Dissipation	8 watts maximum
Size	3.92L x 2.65W x 1.30H
Weight	14 oz.

INSTALLATION

MOUNTING

The SE100A voltage regulator can be mounted in any plane. See Figure 1 for mounting dimensions.

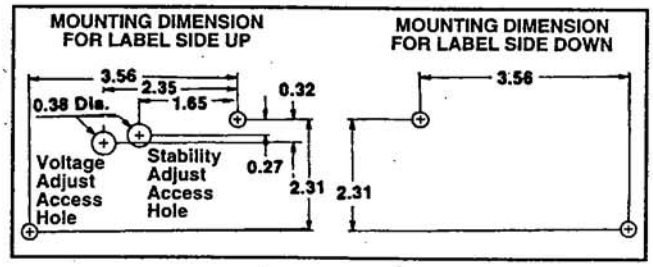

Figure 1

EXCITER POWER CIRCUIT

Connect the regulator wire F+ to the generator F+ or F1 field terminal. Connect the regulator wire F- to the generator F- or F2 field terminal. See Figure 2 for typical connection diagram.

Note: The DC resistance of the exciter field must be greater than 15 ohms but less than 100 ohms.

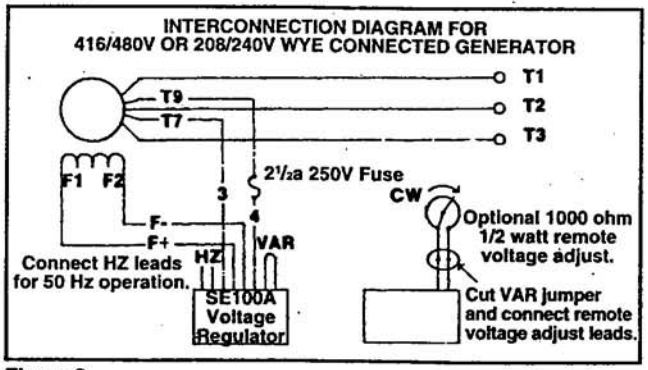

Figure 2

SENSING/POWER INPUT CIRCUIT

See Figure 2 for typical connection diagram.

Input power and sensing is achieved through wires 3 and 4. The **voltage input requirement of the** SE100A regulator is **190 to 240 Vac.**

Refer to the specific generator diagram for proper connections.

FUSE

Use a 2½ amp, 250 volt, type 3AG, fuse.

VOLTAGE ADJUST

The screwdriver adjustable potentiometer adjusts the generator output voltage. Adjustment clockwise increases the generator output voltage.

When using a remote voltage adjust rheostat (VAR), the VAR wire on the regulator should be cut and a 1000 ohm 1/2 watt (minimum) rheostat installed. (See Figure 2.) This will give ±10% voltage variation from the nominal. (For ±5% voltage variation use a 500 ohm 1/2 watt rheostat).

STABILITY ADJUST

The screwdriver adjustable potentiometer adjusts the system stability. Adjustment clockwise increases the stability. Increasing the stability increases the response time of the generator. Conversely, decreasing the stability decreases the response time of the generator.

V/HZ ROLL-OFF FREQUENCY SELECTION

For 60 Hz operation, the two leads labeled "HZ" should be disconnected. This will give a roll-off frequency of about 55 Hz.

For 50 Hz operation, the two leads labeled "HZ" should be connected. This will give a roll-off frequency of about 45 Hz.

The lead ends must be insulated at all times.

OVEREXCITATION SHUTDOWN

This feature turns the regulator off if the exciter field exceeds 100±5 Vdc incorporating an inverse voltage/ time characteristic. If the voltage exceeds 135±5 Vdc, the regulator is turned off instantaneously.

START-UP PROCEDURE

PRELIMINARY SET-UP

Ensure the voltage regulator is correctly connected to the generator. Refer to the specific connection diagram supplied with the generator.

Be sure the proper fuse is installed.

Set the regulator voltage adjust to full counter-clockwise (minimum voltage level).

Set the remote voltage adjust (if used) to the center position.

Set the stability control full clockwise (maximum stability level).

Connect either a 1000 Vdc voltmeter to the generator field terminals F1 and F2 with F1 - positive and F2 - negative or an appropriate ac voltmeter to the generator output leads.

SYSTEM START-UP

Start and run the generator at no load and rated speed. The generator voltage should build up to a minimum level. (Actual level is dependent upon connection). If it does not build up, refer to field flashing section in generator manual.

Slowly adjust the voltage control until the generator voltage reaches the nominal value. If used, adjust the remote voltage adjust rheostat to set the generator voltage to the exact value desired.

Turn the stability adjust counter-clockwise until instability is shown on either of the voltmeters mentioned in the "PRELIMINARY SET-UP" section. With the system operating in an unstable condition, slowly adjust the stability control clockwise until generator stability is reached.

Interrupt regulator power for a short time (approximately 1-2 seconds).

If the generator remains stable, no further adjustment is necessary. If the generator does not remain stable, increase the stability slightly and interrupt regulator power again.

This procedure should be repeated until system stability is reached and maintained.

Symptom	Cause	Action
Residual Voltage - No Output	Residual voltage at regulator power input wires 3 & 4 below 10Vac.	Check wiring diagram for proper connections.
		Flash generator field. Refer to field flashing section in generator manual.
	Field leads F1, F2 not connected.	Connect field leads F1, F2.
	Power input leads not connected.	Connect power input leads 3, 4.
	Blown or missing fuse.	Replace fuse.
	Defective regulator.	Replace regulator.
	Defective generator.	Consult generator manual.
Output Voltage Low	Incorrect connections.	Check wiring diagram for proper connections.
	Voltage adjust turned down.	Rotate voltage adjust CW until desired voltage is reached.
	Remote voltage adjust is turned down.	Rotate remote voltage adjust CW until desired voltage is reached.
	Defective regulator.	Replace regulator.
Output Voltage High	Voltage adjust turned too high.	Rotate voltage adjust CCW until desired voltage is reached.
	Remote voltage adjust is turned too high.	Rotate remote voltage adjust CCW until desired voltage is reached.
Output Voltage High - No Adjustment	Defective regulator.	Replace regulator.
Remote Voltage Adjust Operates Backwards	Voltage adjust wire backwards.	Reverse the wiring of the wiper arm on the remote voltage adjust.
Generator Output Voltage Hunting	Stability adjust not set properly.	Rotate the stability adjust in a CW direction until hunting stops.
Poor Regulation	Defective regulator.	Replace regulator.

SE250 & SE400 VOLTAGE REGULATOR INSTRUCTION MANUAL



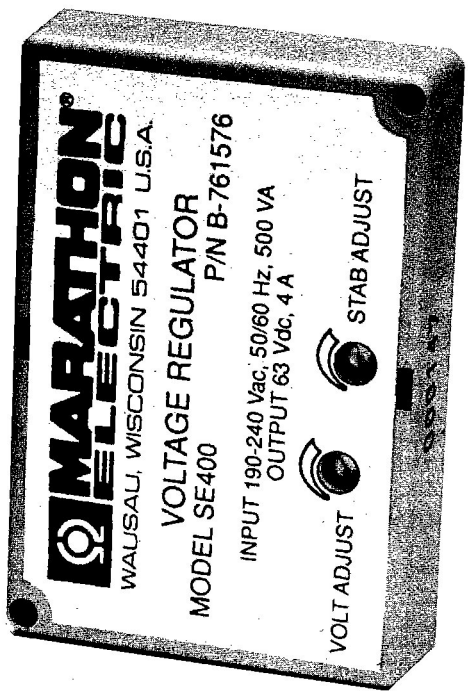

KATOLIGHT® CORPORATION

SPECIFICATIONS

The SE250 and SE400 voltage regulators are partially encapsulated electronic regulators which control the output of a brushless AC generator by regulating the current into the exciter field.

	REGULATOR	
SPECIFICATION	**SE250**	**SE400**
Sensing & Power Input	190-240 Vac	190-240 Vac
Burden	500 VA	500 VA
Output Power - Continuous	63 Vdc @2.5 Adc (158w)	63Vdc @4 Adc (252w)
Output Power - Forcing (240 Vac Input Power)	105 Vdc @4.3 Adc (452w)	105 Vdc @7.0 Adc (735w)
Regulation	1.0%	1.0%
Exciter Field Resistance Minimum Maximum	25 ohms 100 ohms	15 ohms 100 ohms
Voltage Adjustment Range	171-264 Vac	171-264-Vac
Remote Voltage Adjustment Range 2000 ohm rheostat 1000 ohm rheostat	±10% ±5%	±10% ±5%
Frequency Compensation	Fixed	Adjustable
Roll Off Frequency 60 Hz Operation 50 Hz Operation	55 Hz 45 Hz	50-63 Hz 43-53 Hz
Weight	6.5 oz.	7.0 oz.
Operating Temperature	- 40°C to + 60°C	
Storage Temperature	- 65°C to + 85°C	
Power Dissipation	8 watts maximum	
Size	3.94" L X 2.66"W X 2.20"H	
Voltage Buildup	Internal Provisions for automatic buildup from generator residualvoltage as low as 10 Vac.	
EMI Suppression	Internal electromagnetic interference filter (EMI Filter).	
Overexcitation	The regulator turns off when: 1. The exciter field voltage exceeds 100 +5 Vdc for a time inversely proportional to voltage, or 2. Instaneously if the exciter field voltage exceeds 135 +5 Vdc.	

WARNING

TO PREVENT PERSONAL INJURY OR EQUIPMENT DAMAGE, ONLY QUALIFIED PERSONNEL SHOULD INSTALL, OPERATE, OR SERVICE THIS DEVICE.

WARNING

Regulator has live terminals and components when in operation. Electrical shock hazard exists if contacted. Disconnect all power to regulator and make sure generator is off before servicing. Use extreme caution when making adjustments.

CAUTION: DO NOT megger or high-pot the generator with the regulator connected. DO NOT high-pot the regulator.

INSTALLATION

MOUNTING

The SE250 and SE400 voltage regulator can be mounted in any plane. See Figure 1 for mounting dimensions.

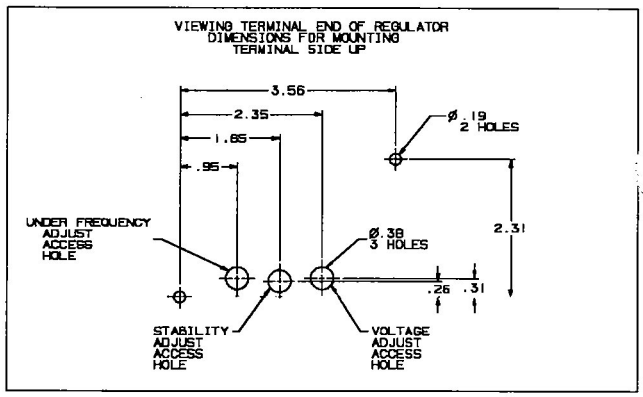

Figure 1

EXCITER POWER CIRCUIT

The DC resistance of the exciter field must be greater than 25 ohms for the SE250 and 15 ohms for the SE400; field resistance must be less than 100 ohms for both.

Connect the regulator F+ terminal to the generator F+ or F1 field terminal. Connect the regulator F- terminal to the generator F- or F2 field terminal. See Figure 2 for typical connection diagram.

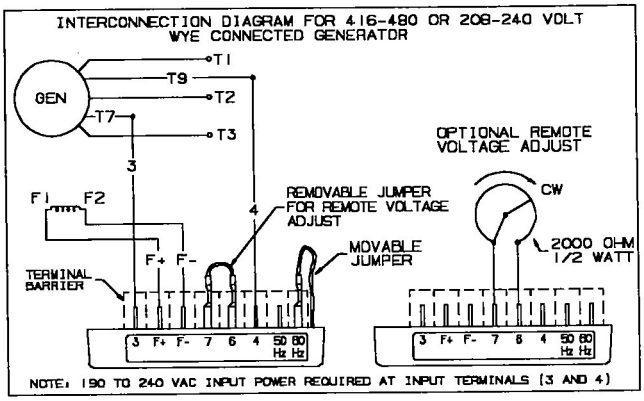

Figure 2

SENSING/POWER INPUT CIRCUIT

Input power and sensing is achieved through terminals 3 and 4. The **voltage input requirement of the SE250 and SE400 regulators is 190 to 240 Vac.**

See Figure 2 for typical connection diagram

FUSE

A 4 Amp 250V - Type 3AG fuse.

VOLTAGE ADJUST

The screwdriver adjustable potentiometer adjusts the generator output voltage. Adjustment clockwise increases the generator output voltage.

When using a remote voltage adjust rheostat, remove the jumper wire across terminals 6 and 7 and install a 2000 ohm 1/2 watt (minimum) rheostat. (See Figure 2.) This will give ±10% voltage variation from the nominal. (For ±5% voltage variation use a 1000 ohm 1/2 watt rheostat).

STABILITY ADJUST

The screwdriver adjustable potentiometer adjusts the system stability. Adjustment clockwise increases the stability. Increasing the stability increases the response time of the generator. Conversely, decreasing the stability decreases the response time of the generator.

V/HZ ROLL-OFF FREQUENCY SELECTION

SE250

For 60 Hz operation, connect the freqency jumper wire to the terminal labeled "60 Hz". This will give a roll-off frequency of about 55 Hz.

For 50 Hz operation, connect the frequency jumper wire to the terminal labeled "50 Hz". This will give a roll-off frequency of about 45 Hz.

SE400

Use jumper to select 50 Hz or 60 Hz. The roll-off frequency is adustable from 50-63 Hz in the 60 Hz setting and from 43-53 Hz in the 50 Hz setting. The adjustment is made from a potentiometer located on the potted side of the regulator (opposite side from the Voltage and Stability adjustments).

The SE400 has the roll-off point pre-set to 54 Hz in the 60 Hz mode and 45 Hz in the 50 Hz mode. To change the roll-off point, adjust engine speed to the desired rated speed. (50 or 60 Hz). Set the voltage to the desired setting at rated speed. Adjust engine speed to the desired roll-off point. Turn the potentiometer counter-clockwise until the voltage starts to drop off. Then adjust the potentiometer clockwise until the voltage returns to rated. Re-adjust engine speed to rated speed.

OVEREXCITATION SHUTDOWN

This feature turns the regulator off if the exciter field exceeds 100±5 Vdc incorporating an inverse voltage/ time characteristic. If the voltage exceeds 135+5 Vdc, the regulator is turned off instantaneously. The regulator will remain latched off until the input power is removed, (or until the generator is stopped and re-started).

START-UP PROCEDURE

PRELIMINARY SET-UP

Check and be sure the voltage regulator is correctly connected to the generator. Refer to the specific connection diagram supplied with the generator.

Be sure the proper fuse is installed.

Set the regulator voltage adjust to full counter-clockwise (minimum voltage level).

Set the remote voltage adjust (if used) to the center position.

Set the stability control full clockwise (maximum stability level).

Connect either a 100Vdc voltmeter to the generator field terminals F1 and F2 with F1 - positive and F2 - negative or an appropriate ac voltmeter to the generator output leads.

SYSTEM START-UP

Start and run the generator at no load and rated speed. The generator voltage should build up to a minimum level. (Actual level is dependent upon connection). If it does not build up, refer to field flashing section in generator manual.

Slowly adjust the voltage control until the generator voltage reaches the nominal value. If used, adjust the remote voltage rheostat to set the generator voltage to the exact value desired.

Turn the stability adjust counter-clockwise until instability is shown on either of the voltmeters mentioned in the "PRELIMINARY SET-UP" section. With the system operating in an unstable condition, slowly adjust the stability control clockwise until generator stability is reached.

Interrupt regulator power for a short time (approximately 1-2 seconds).

If the generator remains stable, no further adjustment is necessary. If the generator does not remain stable, increase the stability slightly and interrupt regulator power again.

This procedure should be repeated until system stability is reached and maintained.

Symptom	Cause	Action
Residual Voltage - No Output	Residual voltage at regulator power input wires 3 & 4 below 10Vac.	Check wiring diagram for proper connections.
		Flash generator field. Refer to field flashing section in generator manual.
	Acceleration time to rated speed too long.	Decrease acceleration time. Interrupt power input to regulator after acheiving rated speed.
	Field leads F1, F2 not connected.	Connect field leads F1, F2.
	Power input leads not connected.	Connect power input leads 3, 4.
	Blown or missing fuse.	Replace fuse.
	Defective regulator.	Replace regulator.
	Defective generator.	Consult generator manual.
Output Voltage Low	Incorrect connections.	Check wiring diagram for proper connections.
	Voltage adjust turned down.	Rotate voltage adjust CW until desired voltage is reached.
	Remote voltage adjust is turned down.	Rotate remote voltage adjust CW until desired voltage is reached.
	Defective regulator.	Replace regulator.
Output Voltage High	Voltage adjust turned too high.	Rotate voltage adjust CCW until desired voltage is reached.
	Remote voltage adjust is turned too high.	Rotate remote voltage adjust CCW until desired voltage is reached.
Output Voltage High - No Adjustment	Defective regulator.	Replace regulator.
Remote Voltage Adjust Operates Backwards	Voltage adjust wire backwards.	Reverse the wiring of the remote voltage adjust.
Generator Output Voltage Hunting	Stability adjust not set properly.	Rotate the stability adjust in a CW direction until hunting stops.
Poor Regulation	Defective regulator.	Replace regulator.

SE350
VOLTAGE REGULATOR
INSTRUCTION MANUAL

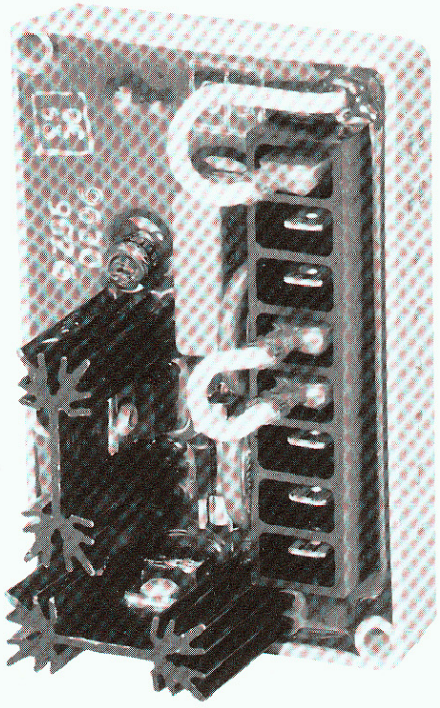

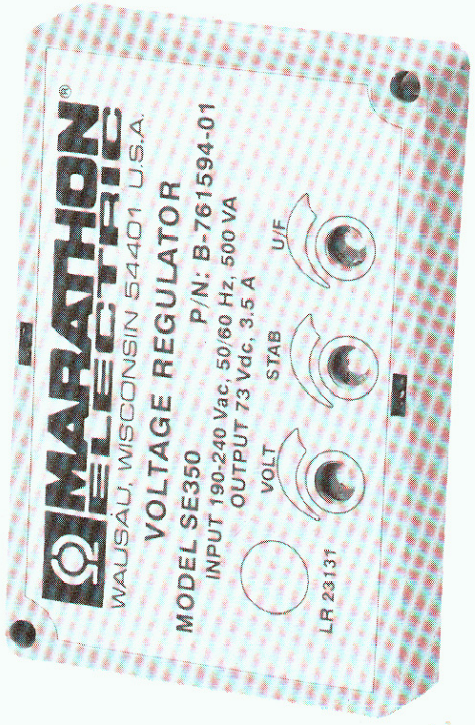

KATOLIGHT®
CORPORATION

INTRODUCTION

The SE350 voltage regulator is an encapsulated electronic voltage regulator which controls the output of a brushless AC generator by regulating the current into the exciter field.

SPECIFICATION	SE350 REGULATOR
Sensing & Power Input	190-240 Vac
Burden	500 VA
Output Power - Continuous	73 Vdc at 3.5 Adc (255w)
Output Power - Forcing (240 Vac Input Power)	105 Vdc at 5 Adc (525w)
Regulation	1.0%
Remote Voltage Adjustment Range	±10% with 2000 ohm rheostat ±5% with 1000 ohm rheostat
Frequency Compensation	Adjustable
Roll Off Frequency	54-61 Hz for 60 Hz Operation 45-51 Hz for 50 Hz Operation
Weight	6.5 oz.
Operating Temperature	-40°C to +60°C
Storage Temperature	-65°C to +85°C
Power Dissipation	8 watts maximum
Size	3.94" L X 2.66" W X 2.20" H
Voltage Buildup	Internal provisions for automatic voltage build up from generator residual voltage as low as 10 Vac.
EMI Suppression	Internal electromagnetic interference filter (EMI Filter).

WARNING

TO PREVENT PERSONAL INJURY OR EQUIPMENT DAMAGE, ONLY QUALIFIED PERSONNEL SHOULD INSTALL, OPERATE, OR SERVICE THIS DEVICE.

CAUTION: DO NOT megger or high-pot the generator with the regulator connected. DO NOT high-pot the regulator.

INSTALLATION

MOUNTING

The SE 350 voltage regulator can be mounted in any plane. See Figure 1 for mounting dimensions.

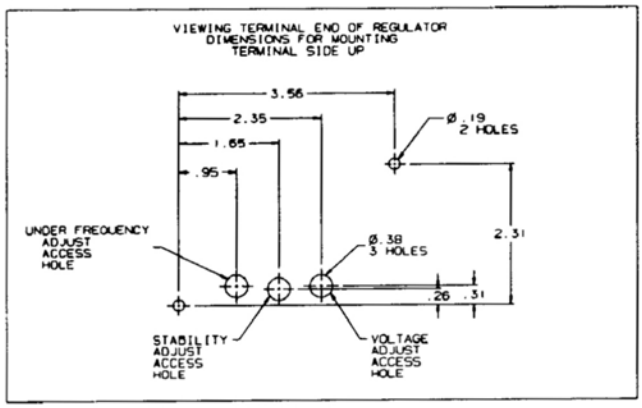

Figure 1

EXCITER POWER CIRCUIT

Connect the regulator wire F+ to the generator F+ or F1 field terminal. Connect the regulator wire F- to the generator F- or F2 field terminal. See Figure 2 for typical connection diagram.

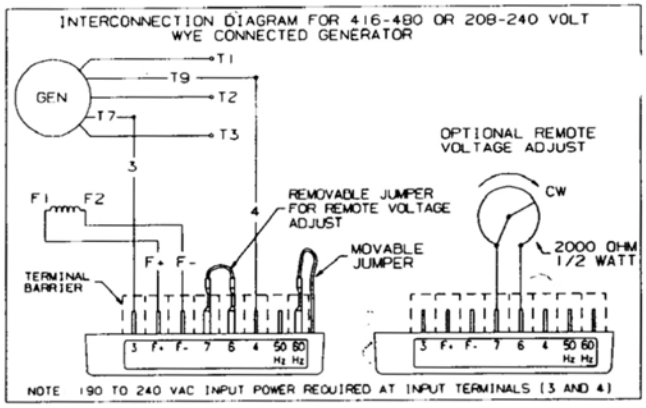

Figure 2

SENSING/POWER INPUT CIRCUIT

Input power and sensing is achieved through terminals 3 and 4. The **voltage input requirement of the SE350 is 190 to 240 Vac.**

See Figure 2 for typical connection diagram

FUSE

A 4 Amp 250V - 5 X 20 mm fuse is supplied with the regulator (Part A-527066). See Figure 3 for location of fuse.

VOLTAGE ADJUST

The screwdriver adjustable potentiometer adjusts the generator output voltage. Adjustment clockwise increases the generator output voltage.
When using a remote voltage adjust rheostat, remove the jumper wire across terminals 6 and 7 and install a 2000 ohm 1/2 watt (minimum) rheostat. (See Figure 2.) This will give ±10% voltage variation from the nominal. (For ±5% voltage variation use a 1000 ohm 1/2 watt rheostat).

STABILITY ADJUST

System stability is the ability of the generator to respond to load transients. Decreasing the stability makes the generator less sluggish and faster to respond to toad transients. If the stability of the regulator is decreased too much, the generator will tend to hunt under steady state conditions.
The screwdriver adjustable potentiometer adjusts the system stability. Adjustment clockwise increases the stability. Increasing the stability increases the response time of the generator. Conversely, decreasing the stability decreases the response time of the generator.

V/HZ ROLL-OFF FREQUENCY SELECTION

The roll off point is the frequency where the generator voltage starts to decrease. This reduces the Kilowatt load to the engine, which allows the engine to recover in speed under any load transient condition.
Use jumper to select 50 HZ or 60 Hz. The screwdriver adjustable potentiometer sets the roll-off frequency from 54-61 Hz in the 60 Hz setting or from 45-51 Hz in the 50 Hz setting.

The 5E350 has the roll-off point preset to 58 Hz in the 60 Hz mode and 48 Hz in the 50 Hz mode. To change the roll-off point, adjust engine speed to the desired rated speed. (50 or 60 Hz). Set the voltage to the desired setting at rated speed. Adjust engine speed to the desired roll-off point. Turn the potentiometer counterclockwise until the voltage starts to drop off. Then adjust the potentiometer clockwise until the voltage returns to rated. Re-adjust engine speed to rated speed.

PRELIMINARY SET-UP

Ensure the voltage regulator is correctly connected to the generator. Refer to the specific connection diagram supplied with the generator.
Set the regulator voltage adjust to full counter-clockwise (minimum voltage level).
Set the remote voltage adjust (if used) to the center position.
Set the stability control full clockwise (maximum stability level).
Connect the positive lead of a 100 V D.C. voltmeter to Fl and the negative lead of the voltmeter to F2 or use an appropriate AC voltmeter on the generator output leads.

SYSTEM START-UP

Start and run the generator at no load and rated speed. The generator voltage should build up to a minimum level. (Actual level is dependent upon connection). If it does not build up, refer to field flashing section in generator manual.
Slowly adjust the voltage control until the generator voltage reaches the nominal value. If used, adjust the remote voltage rheostat to set the generator voltage to the exact value desired.
Turn the stability adjust counter-clockwise until instability is shown on either of the voltmeters mentioned in the “PRELIMINARY SET-UP” section. With the system operating in an unstable condition, slowly adjust the stability control clockwise until generator stability is reached. Interrupt regulator power for a short time (approximately 1-2 seconds).
If the generator remains stable, no further adjustment is necessary. If the generator does not remain stable, increase the stability slightly and interrupt regulator power again.
This procedure should be repeated until system stability is reached and maintained.

TROUBLESHOOTING

Symptom	Cause	Action
Residual Voltage -No Output	Residual voltage at regulator power input wires 3 & 4 below 10 V ac.	Check wiring diagram for proper connections. Flash generator field. Refer to field flashing section in generator manual.
	Acceleration time to rated speed too long.	Reduce acceleration time. Interrupt power input to regulator after achieving rated speed.
	Field leads Fl, F2 not connected.	Connect field leads Fl, F2.
	Power input leads not connected.	Connect power-input leads 3,4.
	Blown or missing fuse.	Replace fuse.
	Defective regulator.	Replace regulator.
	Defective generator.	Consult generator manual.
Output Voltage Low	Incorrect connections.	Check wiring diagram for proper connections.
	Voltages adjust turned down.	Rotate voltages adjust CW until desired voltage is reached.
	Remote voltage adjust is turned down.	Rotate remote voltages adjust CW until desired voltage is reached.
	Defective regulator.	Replace regulator.
Output Voltage High	Voltages adjust turned too high.	Rotate voltages adjust CCW until desired voltage is reached.
	Remote voltage adjust is turned too high.	Rotate remote voltages adjust CCW until desired voltage is reached.
Output Voltage High - No Adjustment	Defective regulator.	Replace regulator.
Remote Voltage Adjust Operates Backwards	Voltages adjust wire backwards.	Reverse the wiring of the remote voltage adjust.
Generator Output Voltage Hunting	Stability adjusts not set properly.	Rotate the stability adjusts in a CW direction until hunting stops.
Poor Regulation	Defective regulator.	Replace regulator.

SE350_Brochure_KL_3-17-04

INSTRUCTION MANUAL
FOR

VOLTAGE REGULATOR
Models: SR4A & SR8A
Part Number: 9 0177 00 XXX



Basler Electric
Highland, Illinois

Publication Number: 9 0177 00 990
Date: August, 1971
Revision K: December, 1991

SECTION 1
GENERAL INFORMATION

1-1. DESCRIPTION

a. The SR4A and SR8A Voltage Regulators precisely control the output voltage of an ac electric generating system by controlling the amount of current supplied to the exciter (or generator) field. This includes brushless rotary exciters, brush type rotary exciters or direct excitation into the generator field of machines within the regulator's power rating.

b. The regulators consist of silicon controlled rectifiers (SCR's) transistors, transformers, silicon diodes, resistors and capacitors. The voltage regulators contain no electrolytic capacitors and are relatively unaffected by temperature, humidity, vibration and shock.

1.2 SPECIFICATIONS

Table 1-1 provides the electrical specifications of the SR4A and SR8A while Table 1-2 provides the physical specifications.

Table 1-1. Electrical Specifications.

Input Power:	
SR4A:	95 - 139 Vac (±10), 50/60 Hz, 840 VA.
SR8A:	190 - 277 Vac (±10), 50/60 Hz, 1680 VA.
Output Power:	
SR4A:	63 Vdc @ 7 A Maximum Continuous, 90 Vdc @ 10 A One Minute Forcing.
SR8A:	125 Vdc @ 7 A Maximum Continuous, 180 Vdc @ 10 A One Minute Forcing.
Input Sensing:	
SR4A:	NEMA Standard 60 Hz: 100 - 110/190 - 200 - 208/220 - 230 - 240/380 - 400 - 415/500 Vac; ±10%.
SR8A:	NEMA Standard 60 Hz: 120 - 139/208/240/416/480/600 Vac; ±10%.
Input Sensing Burden:	
SR4A:	10 VA.
SR8A:	10 VA.
Parallel Compensation:	5 A Input; 25 VA Burden. Droop adjust to 6%.
Minimum Field Resistance:	
SR4A:	9Ω
SR8A:	18Ω
Voltage Regulation:	<±1/2% (Average voltage).
Response Time:	<17 mS on 60 Hz systems; <20 mS on 50 Hz systems.
Voltage Adjust Range:	±10% on nominal.
Power Dissipation (Max):	60 Watts
Temperature Coefficient:	±1/2% for a 40° C (104° F) change.

Table 1-2. Physical Specifications.

Operating Temperature Range:	-55° C (-67° F) to +70° C (+158° F).
Storage Temperature Range:	-65° C (-85° F) to +100° C (+212° F).
Vibration:	Tested to withstand 5 G's from 20 to 260 Hz.
Mounting:	Designed for operation when mounted directly to an engine generator set. It is strongly recommended that the voltage regulator be mounted vertically for optimum cooling.
Overall Dimensions:	
Height:	11.5 inches (292 mm).
Width:	8.38 inches (213 mm).
Depth:	5.0 inches (127 mm).
Weight:	13 lbs. (5.8 kg.).

1-3. OPTIONAL FEATURES

The internal voltage regulator optional features listed below are designated by a combination of letters and numbers in the complete model number. (See Table 1-3 and/or contact the factory for additional variations).

a. Parallel compensation
c. Voltage build up relay
b. Single or three-phase sensing.
d. Sensing Voltage
e. Cover
f. Voltage adjust rheostat
9. Type of stability circuit

1-4. ACCESSORIES

a. The following is a partial list of accessories that are available for use with the SR4A and SR8A Voltage Regulators.

(1) Underfrequency protection.
(2) Excitation support systems.
(3) EMI suppression filters.
(4) Low and medium voltage power isolation transformers.
(5) Paralleling current transformers.
(6) Manual Voltage control modules.
(7) Volts per hertz sensing modules.
(8) DC sensing modules.
(9) 400 hertz regulator.
(10) Voltage regulators operating from 60 hertz power on 400 hertz generators
(11) Wide range voltage adjust circuit components.
(12) VAR/Power Factor Controller.
(13) Overvoltage protection.
(14) Control switches.
(15) Motor operated controls.
(16) Line drop compensators.
(17) Voltage transient suppression filters.

b. Information covering these accessories may be obtained by consulting the applicable instruction manual and product bulletin, or by contacting your nearest Basler Electric Sales Representative or the factory.

c. An external voltage adjust rheostat may be obtained from a source other than Basler Electric. This rheostat must be a minimum of 2 watts in size. The nominal required resistance is 175 ohms. Although any value from 150 ohms to 250 ohms may be used, a slight change in the voltage adjust range will occur.

1-5. MODEL NUMBER DESCRIPTION AND SELECTION

The model number of the voltage regulator is a combination of letters and numbers indicating the features which are included in the regulator. An example of a model number, showing the manner in which the various features are designated, is shown below in Figure 1-1. A complete list of various features and their description is given in Table 1-3.

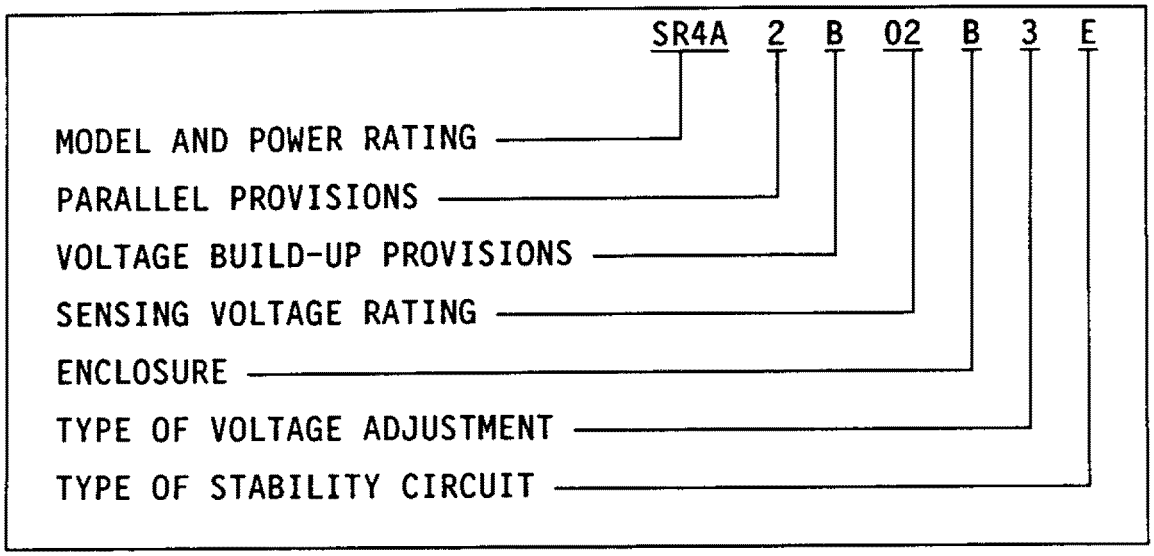

Figure 1-1. Typical Model Number

Table 1-3. Model Number Designations

SR4A	2	B	02	B	3	3
See Table 1-1	1-No parallel provisions. 2-Parallel provisions with adjustable slide wire resistor. 3-Parallel provisions with paralleling rheostat supplied for external mounting and wiring.	A-No relay. B-With relay (Standard). C-Hermetically sealed relay.	01-120 V, 1φ 02-208 V, 1φ 03-240 V, 1φ 04-416 V, 1φ 05-480 V, 1φ 06-120 V, 3φ 07-208 V, 3φ 08-240 V, 3φ 09-416 V, 3φ 10-480 V, 3φ 11-Special Voltage, 1φ 12-Special Voltage, 3φ 13-600 V, 1φ 14-600 V, 3φ	A-No cover. B-Solid cover, perforated ends (Standard)	1-Voltage adjust rheostat supplied by others 2-Voltage adjust rheostat, internally mounted, 150Ω, 2W. 3-Voltage adjust rheostat, externally mounted, 175Ω, 25W. 4-Voltage adjust rheostat internally mounted, with locking shaft, 150Ω, 2W.	A-For use on all brush type exciter applications and brushless exciters on most generators rated over 150 kW. B-For use as a Static Exciter, E-For use with brushless exciters (primarily on most generators rated less than 150 Vac.

NOTES:

1. The stability circuit rating shown is only a guide. Good system stability and regulator performance may be achieved at generator ratings outside these guidelines.

SECTION 2
PRINCIPLES OF OPERATION

2-1 FUNCTIONAL CIRCUITS

Refer to the Block Diagram, Figure 2-1. The voltage regulator senses the generator voltage, compares a rectified sample of that voltage with a reference diode (zener) voltage and supplies the field current required to maintain the predetermined ratio between the generator voltage and the reference voltage. This unit consists of five basic circuits. These are a sensing circuit, an error detector, an error amplifier, a power controller and a stabilization network.

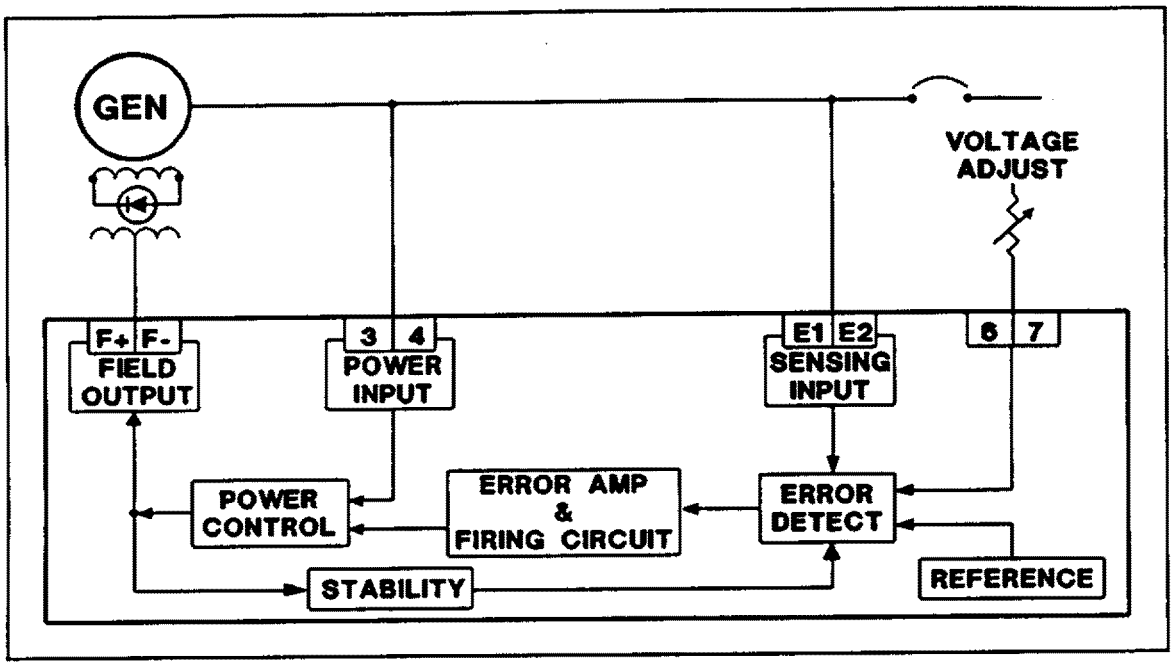

Figure 2-1. Overall Block Diagram

2-2. CIRCUIT OPERATION (Refer to Figure 2-2)

a. ***Sensing Circuit.*** This circuit consists of a sensing transformer(s) T1 (T2), diodes CR1, CR2, CR3, CR4, CR5, and CR6, capacitor C1, resistor R16, and filter choke L1. It will sense the generator voltage, rectify and filter this voltage and apply the resultant dc signal to the error detector and error amplifier.

b. ***Error Detector.*** This detector consists of reference (zener) diode VR1 and a voltage divider network consisting of resistors R1, R2, R3 and R5. This network provides a dc signal that is proportional to the generator voltage. The voltage at the junction of R3 and R5 is compared to the voltage of VR1 to develop the error signal, which is applied to the error amplifier.

c. ***Error Amplifier.*** This amplifier consists of a two-stage transistor amplifier Q1 and Q2, a unijunction transistor Q3, emitter follower Q4 and their associated components. The error signal drives QI which in turn controls Q2. Transistor Q2 controls the charging time of capacitor C4 in the emitter circuit of Q3, thus providing phase angle control of the firing signal applied to the SCR's in the power controller. Transistor Q4 provides the correct voltage to base 2 of Q3, to maintain uniform SCR firing.

Katolight Service - Master Repair Manual - Page 1552

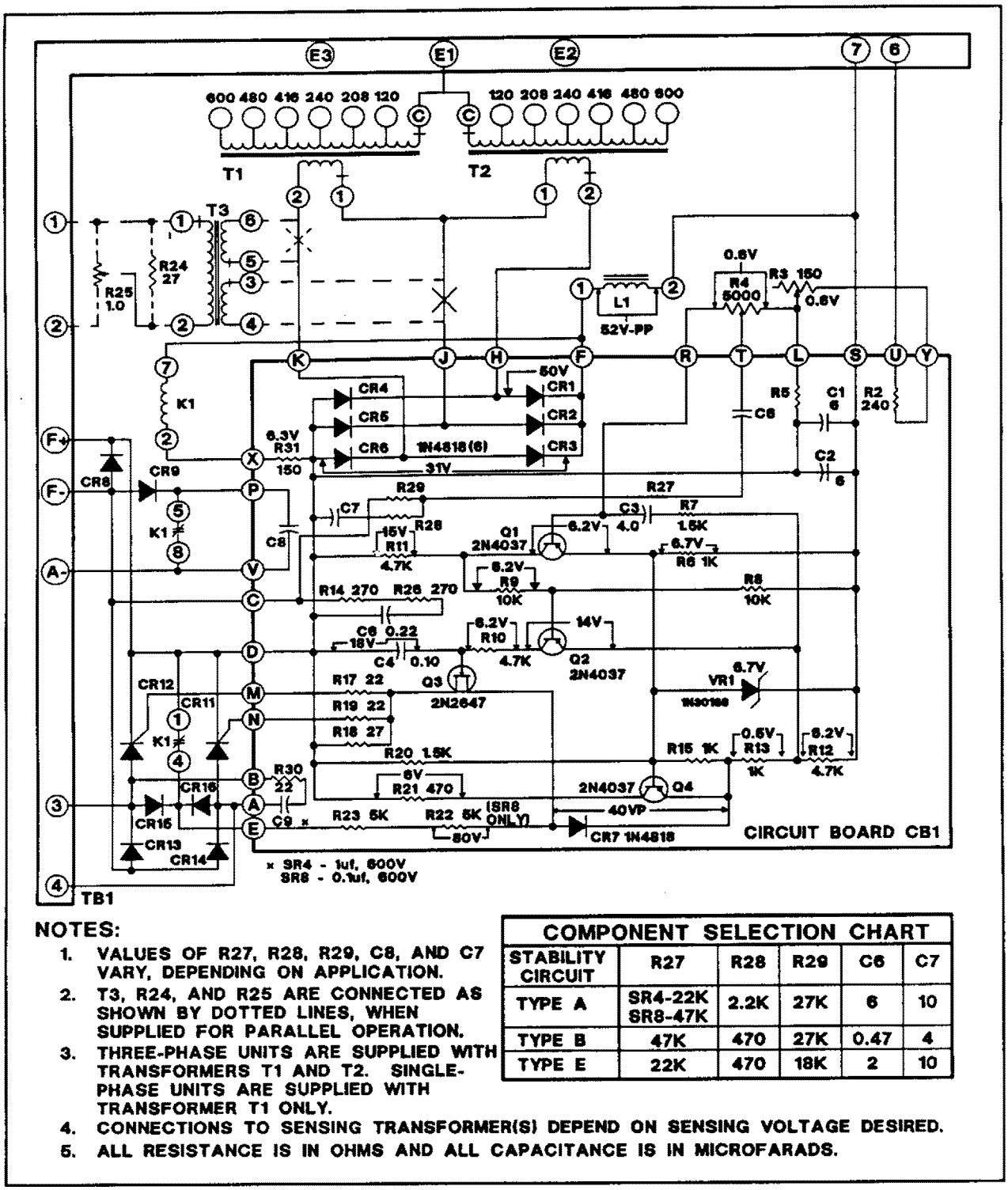

NOTES:

1. VALUES OF R27, R28, R29, C8, AND C7 VARY, DEPENDING ON APPLICATION.
2. T3, R24, AND R25 ARE CONNECTED AS SHOWN BY DOTTED LINES, WHEN SUPPLIED FOR PARALLEL OPERATION.
3. THREE-PHASE UNITS ARE SUPPLIED WITH TRANSFORMERS T1 AND T2. SINGLE-PHASE UNITS ARE SUPPLIED WITH TRANSFORMER T1 ONLY.
4. CONNECTIONS TO SENSING TRANSFORMER(S) DEPEND ON SENSING VOLTAGE DESIRED.
5. ALL RESISTANCE IS IN OHMS AND ALL CAPACITANCE IS IN MICROFARADS.

COMPONENT SELECTION CHART

STABILITY CIRCUIT	R27	R28	R29	C6	C7
TYPE A	SR4-22K SR8-47K	2.2K	27K	6	10
TYPE B	47K	470	27K	0.47	4
TYPE E	22K	470	18K	2	10

Figure 2-2. Schematic Diagram.

d. ***Power Controller.*** The controller consists of thyristors (SCR's) CR11, CR12 and conventional diodes CR13 and CR14 in a bridge rectifier circuit. The amount of output current depends upon the conduction time of the SCR's and the exciter field resistance. This circuit can be compared to

a variable rectifier, placed between the power source (terminals 3 and 4) and the exciter field (terminals F+ and F-).

e. ***Stabilization Network.*** This circuit provides stable operation under all operating conditions. It consists of capacitors C6 and C7, resistors R27, R28, R29, R33 and variable resistor R4. This RC network injects a stabilizing signal from the power stage to the error amplifier to prevent oscillations (hunting). R4 determines the amount of stability signal applied to the error amplifier. (See paragraph 4-4b.)

f. ***Automatic Voltage Build-Up.*** The relay (K1), provides automatic voltage build up from generator residual voltage. Normally closed contacts (relay de-energized) provide a current path around the control rectifier to allow the generator residual voltage to be converted to dc by diodes CR13, CR14, CR15, and CR16 and applied to the exciter field. When the generator voltage reaches approximately 75% of rated, the relay pulls in, removing the conventional rectifiers allowing SCR'S to take control. A minimum of 3% generator residual is required for automatic voltage build-up. If less than 3%, external field flashing may be required. (See paragraph 4-7.) For K1 Relay's other function refer to paragraph 2-3b.

2-3. APPLICATION INFORMATION

a. ***Starting large motors or providing fault current for selective breaker tripping.***

(1) For generators equipped with brushless exciters or for static excited generators the field power is taken from the generator output voltage. A heavy load, such as a large motor, can cause the generator voltage to decrease substantially at the first few cycles after load applications. A short circuit on the generator output could reduce the voltage from the generator to zero. Either of these conditions can cause reduction of the available field power to a level which will not sustain generator voltage. Accessory excitation support systems are available which take advantage of the generator line currents as a source of excitation power during either condition.

(2) For brush-type rotation excited generators, the exciter armature connections can be used as an alternate source of excitation during either of the conditions described above to provide excitation support. See Figure 3-2 for a typical interconnection diagram. This scheme uses the other contact on the buildup relay to connect dc voltage from the exciter armature directly to the exciter field. As an alternative, the regulator could be used as described in paragraph 2-3a. with an excitation support system accessory. Refer to paragraph 2-2f.

2-4. PARALLEL COMPENSATION

a. ***Reactive Droop Compensation (Droop) or Reactive Differential Compensation (Cross-Current)***

(1) When parallel operation is required, additional components are required in the regulating system. These are resistor R25, transformer T3 and a current transformer CT1. Two of the components are included in a parallel equipped voltage regulator. These are R25 and T3. Current transformer CT1 is a separate item and must be interconnected as shown in Figures 3-2 or 3-3.

(2) These components allow the paralleled generators to share reactive load and reduce circulating reactive currents between them. This is accomplished in the following manner.

(3) A current transformer CT1 is installed in phase B of each generator. It develops a signal that is proportional in amplitude and phase to the line current. This current signal develops a voltage across resistor R25. A slider on R25 supplies a part of this voltage to the primary of the transformer T3. The secondaries of T3 are connected in series with the leads from the secondary of the sensing transformer T1, and the sensing rectifiers located on the printed circuit board. The ac voltage applied to the sensing rectifier bridge is the vector sum of the stepped down sensing voltage (terminals E1 and E3) and the parallel CT signal supplied through T3 (terminals 1 and 2). The

Katolight Service - Master Repair Manual - Page 1554

voltage supplied to the sensing rectifiers by the parallel CT is very small in relation to the signal supplied by the sensing voltage. The regulator input sensing voltage (terminals E1 and E3) and the parallel compensation signal (terminals 1 and 2) must be connected to the generator system so as to provide the correct phase and polarity relationship.

(4) Regulators with single-phase sensing provide about 8% maximum droop while three-phase sensing regulators provide 6% droop. When generators are paralleled on the same bus and have different type sensing, care must be taken to compensate for these differences using the slide wire adjustment on the droop resistor R25.

(5) When a resistive load (unity P.F) load is applied to the generator, the voltage that appears across R25 (and T3 windings), leads the sensing voltage by 90°, and the vector sum of the two voltages is nearly the same as the original sensing voltage; consequently, almost no change occurs in generator output voltage.

(6) When a lagging power (inductive) load is applied to the generator, the voltage across R25 becomes more in phase with the sensing voltage and the combined vectors of the two voltages results in a larger voltage being applied to the sensing rectifiers. Since the action of the regulator is to maintain a constant voltage at the sensing rectifiers, the regulator reacts by decreasing the generator output voltage.

(7) When a leading power factor (capacitive) load is applied to the generator, the generator, the voltage across R25 becomes out of the phase with the sensing voltage and the combined vectors of the two voltages results in a smaller voltage being applied to the sensing rectifiers, then the regulator reacts by increasing the generator voltage.

(8) When two generators are operating in parallel, if the field excitation on one generator should become excessive and cause a circulating current to flow between generators, this current will appear as a lagging power factor (inductive) load to the generator with excessive field current and a leading power factor (capacitive) load to the other. The parallel Compensation circuit will cause the voltage regulator to decrease the field excitation on the generator with the lagging power factor load, and increase the field excitation on the generator with the leading power factor load, so as to minimize the circulating currents between the generators.

b. ***Reactive Droop compensation (Droop).*** This action and circuitry is called reactive droop compensation (droop). It allows two or more paralleled generators to proportionally share inductive loads by causing a decrease or droop in the generator system voltage.

c. ***Reactive differential compensation (cross-current).***
(1) Reactive differential compensation allows two or more paralleled generators to share inductive reactive loads with no decrease or droop in the generator system output voltage. This is accomplished by the action and circuitry described previously for reactive droop compensation, and the addition of cross connecting leads between the parallel CT secondaries as shown is Figure 3-4. By connecting the finish of one parallel CT to the start of another, a closed series loop is formed, which interconnects the CT's of all generators to be paralleled. The signals from the interconnected CT's cancel each other when the line currents are proportional and in phase. No system voltage decrease occurs. These regulators provide the necessary circuit isolation so that parallel reactive differential compensation can be used. The reactive differential circuit can only be used when all the generators connected in parallel have identical paralleling circuits included in the loop.

(2) Reactive differential compensation cannot be used when paralleled with the utility or other infinite (utility) bus. When reactive differential compensation is to be used on an isolated bus that may parallel with the utility bus, an auxiliary contact on the breaker used to connect the isolated bus to the utility bus must be used to open the reactive differential interconnecting loop any time the isolated system is connected to the utility. Contact the factory for additional information.

Katolight Service - Master Repair Manual - Page 1555

SECTION 3
INSTALLATION

3-1. MOUNTING

The voltage regulator will operate when mounted in any position, however, it should be vertically mounted to obtain optimum cooling when operating near its full rated output. The regulator can be mounted in any location where the ambient temperature does not exceed its ambient operational limits. Due to its rugged construction, the regulator can be mounted directly on the generator. The overall and mounting dimensions are shown in Figure 3-1. The mounting dimensions of the associated potentiometers are shown in Figures 3-2 and 3-3.

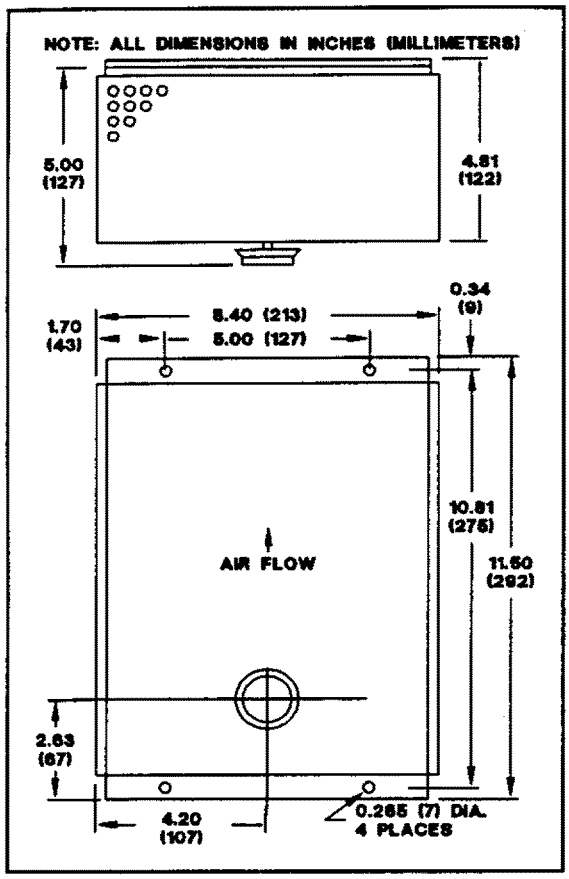

Figure 3-1. Outline Drawing.

3.2 INTERCONNECTION

CAUTION

Meggers and high potential test equipment must not be used. Incorrect use of such equipment could damage the semiconductors contained in the regulator.

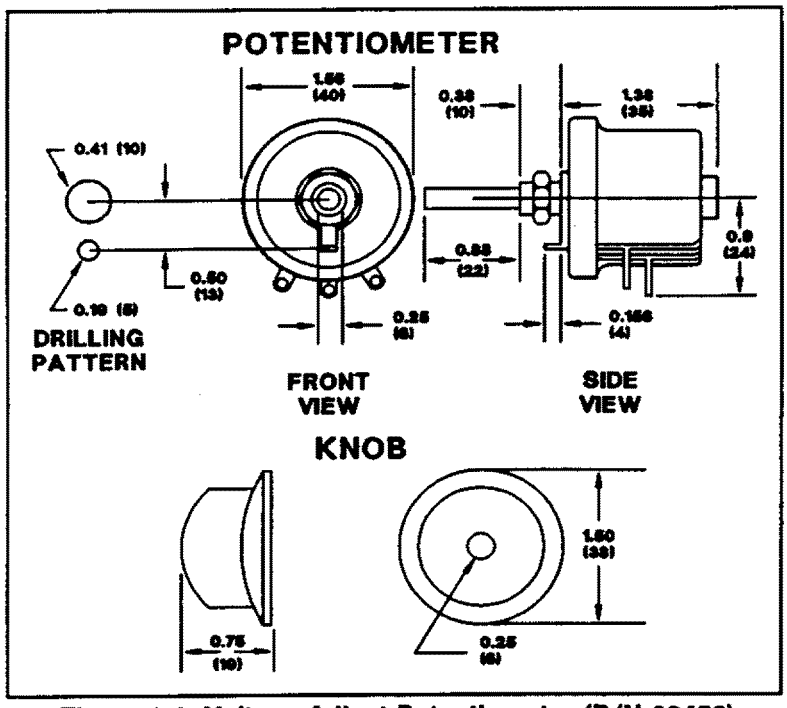

Figure 3-2. Voltage Adjust Potentiometer (P/N 03456)

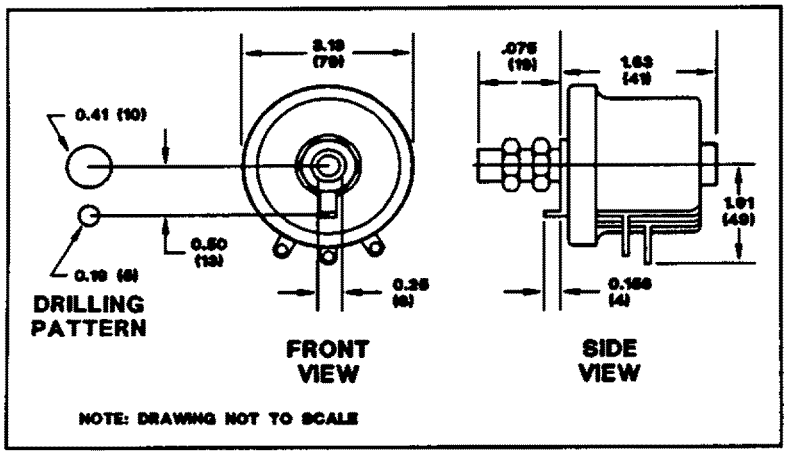

Figure 3-3. Paralleling Potentiometer (P/N 03469)

a. ***General.*** The regulator must be connected to the generator system as instructed in this section and as shown in the basic interconnection diagrams (Figures 3-4 and 3-5). Number 16 gauge wire (or larger) should be used for all connections to the regulator.

b. ***Regulator Sensing (Terminals E1, E2, and E3).***
(1) The voltage regulator(s) contain an internal sensing transformer T1 (T2) provided with taps for various input sensing voltages. The model number of the unit designates the sensing voltage and also, if it is equipped for single-phase (T1) or three-phase (T1 and T2) sensing. For operation with generator voltages above 600 Vac, a potential transformers(s) must be used to supply the regulator sensing voltage. The regulator sensing circuit load is less than 10 VA and correct polarity must be maintained to the regulator sensing input.

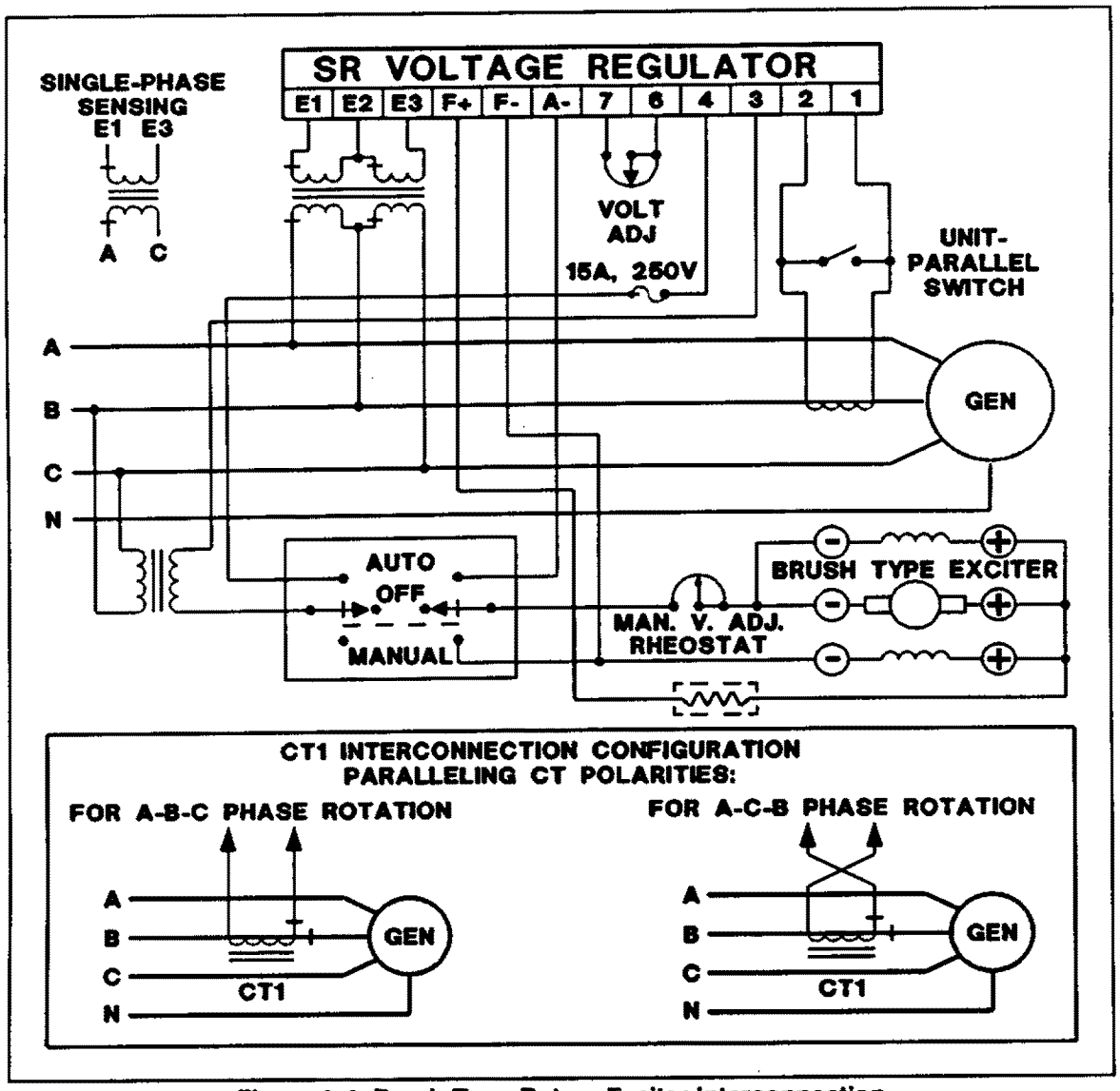

Figure 3-4. Brush Type Rotary Exciter Interconnection.

(2) On single-phase sensing models, the voltage sensing leads are connected to terminals E1 and E3. For three-phase sensing, terminals E1, E2 and E3 are used. For precise voltage regulation, the sensing leads should be connected as close as possible to the point where regulation is desired. The regulator regulates the voltage that is applied to its sensing terminals. Therefore, it cannot correct for voltage drop in leads that may occur at points other than where the regulator sensing leads are connected. The leads that supply regulator sensing should not be used to supply power to any other equipment or to the regulator power stage (terminals 3 and 4).

(3) If the generator is to be operated in parallel with other generators, the phase relationship of sensing voltage and the paralleling current transformer is very important. (See paragraph 3-3 for further information.)

c. *Field Power (Terminals F+ and F-).*

(1) The model number prefix (SR4A or SR8A) of the regulator, defines the amount of power the unit is capable of delivering (See Table 1-1).

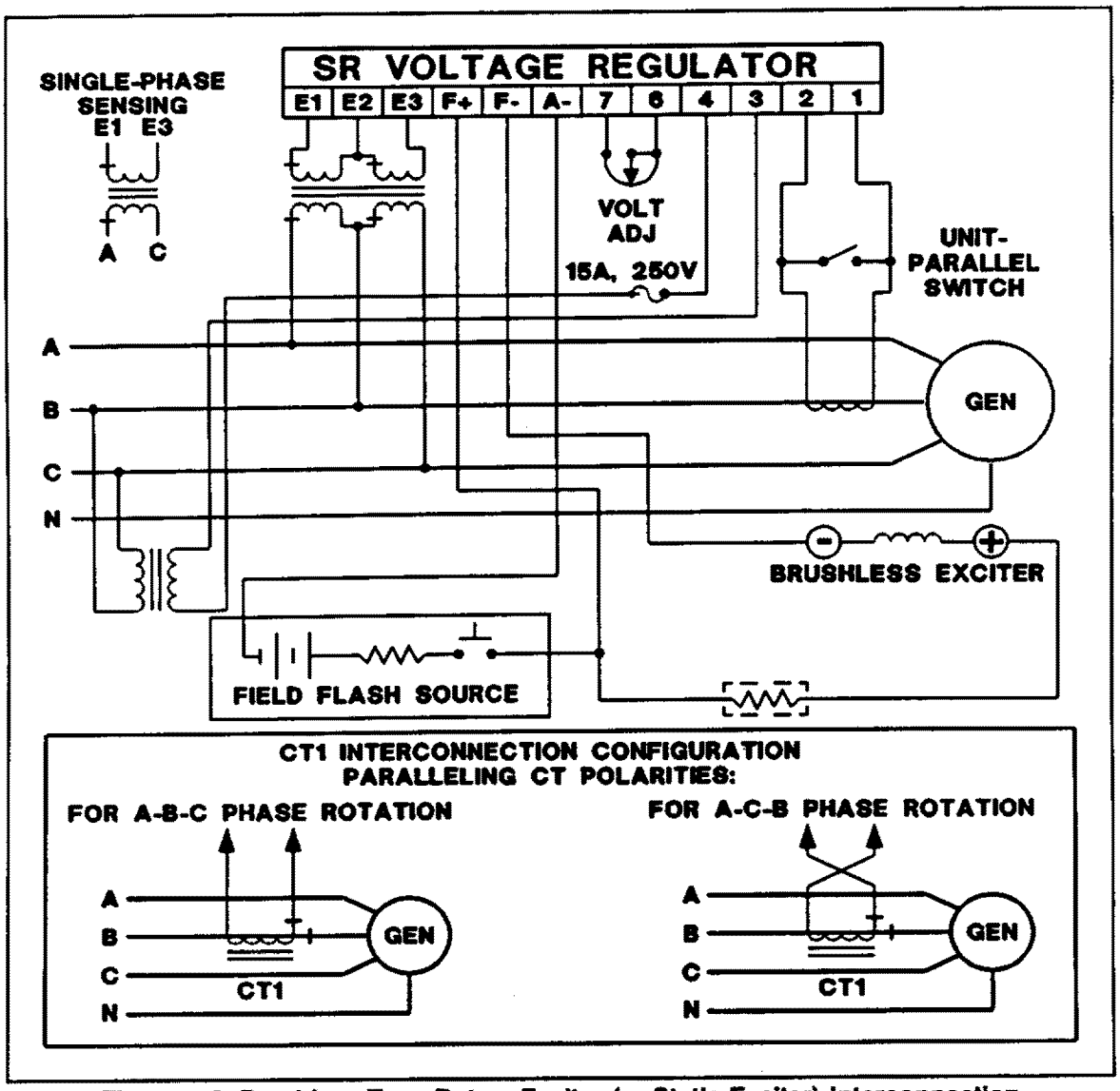

Figure 3-5. Brushless Type Rotary Exciter (or Static Exciter) Interconnection.

(2) The dc resistance of the field to which the regulator is connected (terminals F+ and F-) must be equal to, or greater than, 9 Ω for an SR4A and 18 Ω for an SR8A. If the resistance is less than the specified minimum, a resistor must be added in series with the field. This resistor value plus the field resistance, must exceed the minimum preceding values.

(3) Good generator voltage stability usually results when the regulator output is above 10 Vdc at no load (20 Vdc SR8A). Should the voltage be less and a voltage stability problem exists, it may be necessary to add resistance in series with the field. This resistance raises the regulator output voltage, thereby increasing the stability signal.

(4) When adding resistance in series with the field, the resistor value must not restrict field forcing during full load conditions. The following example explains how to compute the proper resistance:

EXAMPLE: An SR4A voltage Regulator is required to operate into an exciter field that has a dc resistance of 4 Ω and current requirement of 2.5 Adc at no load and 6 Adc at full load. Since the SR4A requires a minimum field resistance of 9 Ω, a resistor of at least 5 Ω must be connected in series with the field. The regulator output will be 9 Ω times 2.5 A or 22.5 Vdc at no load, and 9 Ω times 6 A or 54 Vdc at full load. This conforms to the 10 volt minimum at no load and provides a sufficient amount of forcing at full load (up to 90 Vdc).

d. ***Interconnecting Regulator with Brush Type Rotary Exciters (Terminal A-).***

(1) When making connections on brush type rotary exciter applications, it is very important to observe the polarities of the exciter field, exciter output and the generator field as shown in Figure 3-2. If these polarities are not known, the system should be operated on manual voltage control and the polarities accurately determined, before connecting the voltage regulator into the system. The voltage regulator could be damaged if interconnection is attempted before this data is known.

(2) When manual voltage control is desired on brush type exciter applications, a **MANUAL-OFF-AUTO** switch and a field rheostat are used. (See Figure 3-4.) When this feature is not desired, the output of the exciter can be connected directly to the regulator (terminal A-), to allow self-excitation during short-circuit or overloads.

(3) When large motor starting or short circuit sustaining capability is not required it is not necessary to use A- terminal.

e. ***Input Power (Terminals 3 and 4).***

(1) The model number prefix (SR4A or SR8A) of the regulator defines the maximum input power requirements. (See Table 1-2.) The current requirement of the field, to which the regulator is operating into, will determine the actual input current. The nominal voltage applied to the regulator input power stage (terminals 3 and 4) must be 120V for the SR4A and either 208 or 240V for SR8A. The input power may be taken from any generator lines that provide the correct voltage (line to line or line to neutral). The phase relationship of this input in relation to other circuits is not important.

(2) When the generator output voltage is different than the preceding values and exceed the values specified in Table 1-2, a power transformer must be used to match the generator voltage to the regulator input. If excessive voltage is applied to the regulator input (terminals 3 and 4), the regulator may be damaged.

CAUTION

Without the use of this transformer, a ground at any point in the field circuit and another ground in the generator output, could result in failure of the regulator.

(3) If the field or field flashing circuit is grounded, a power transformer must be used to isolate the regulator input from ground.

3-3. PARALLEL COMPENSATION (Terminals 1 and 2)

a. When it is required to operate the regulator in parallel with an isolated or utility bus, first verify the model number to insure the unit is equipped with parallel provisions (See Table 1-2.).

Katolight Service - Master Repair Manual - Page 1560

b. In addition to the regulator provisions, a 25 VA current transformer (CT) is required (See Figure 3-2 and 3-3). This CT is connected in a generator line and should deliver from 3 to 5 A secondary current at rated load.

(3) The phase relationship of CT signal to the regulator sensing voltage must be correct or the system will not parallel properly. On three-phase sensing models the CT must be installed in the line that supplies sensing voltage to regulator terminal E2. For single-sensing phase models it must be installed in the line of the three-phase generator that does not supply sensing to the regulator.

(4) Figures 3-2 and 3-3 show the correct CT polarity for A-B-C phase rotation sequence. If the phase rotation sequence is A-C-B, the CT's secondary leads must be interchanged.

3-4. REACTIVE DROOP COMPENSATION (DROOP)

a. For reactive droop compensation, connect the CT to its respective regulator as shown on Figures 3-4 and 3-5.

b. A unit-parallel switch shorts the parallel CT secondary to prevent any droop signal from being injected into the regulating system during single unit operation. The switch may not be required on parallel droop compensation applications where a voltage drop is not objectionable.

3-5. REACTIVE DIFFERENTIAL COMPENSATION (CROSS CURRENT)

a. On parallel reactive differential compensation applications a contact should be used to short out the paralleling CT secondary when that generator is not paralleled to the bus. If the switch is not used, a voltage droop will be introduced into the system. This is due to the unloaded generator parallel CT not supplying its compensating signal, but allowing a voltage drop to occur across it. Lack of this shorting contact will also cause the voltage of the incoming generator to fluctuate prior to paralleling. Ideally, this contact is an auxiliary on the circuit breaker contactor that opens when the circuit breaker is closed.

b. For reactive differential compensation, connect each CT to its respective regulator. Then connect the finish of the first CT to the start of the second CT, the finish of the second CT to the start of the third CT, etc. Continue until all CT's are connected in series. The final step will be to connect the finish of the last CT to the start of the first CT. (See Figure 3-6)

c. Reactive differential compensation cannot be used when paralleled with the utility or any infinite bus. If this compensation system is used, a switching circuit must be used to convert the system to a reactive droop compensation system. Contact the factory for additional information.

Katolight Service - Master Repair Manual - Page 1561

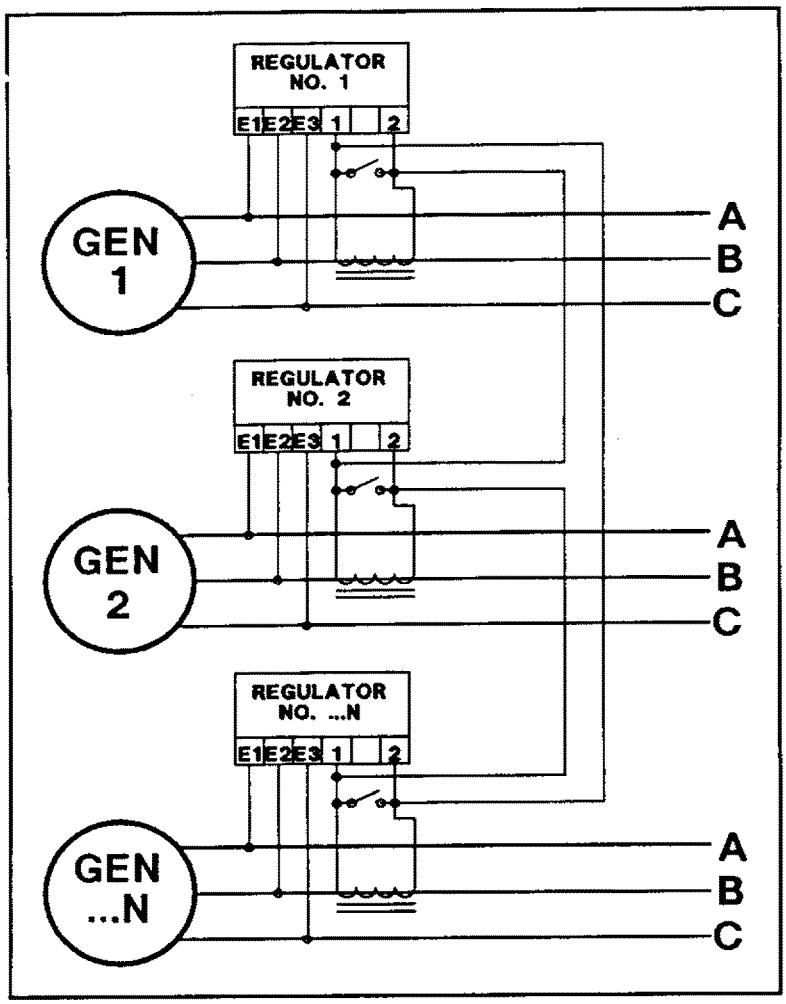

Figure 3-6. Reactive Differential (Cross-Current) Compensation CT Interconnection.

SECTION 4
OPERATION

4-1. GENERAL

The initial operating procedures are outlined in paragraph 4-6 through 4-7 and should be reviewed before operation is attempted.

4-2. OPERATION AT REDUCED SPEEDS

CAUTION

Do not operate the generating system at reduced speeds for an extended period of time with the voltage regulator in operation.

Prolonged operation at speeds lower than normal can damage the voltage regulator and/or exciter and generator field. If operation at reduced speed is essential, input power should be removed from the regulator or an underfrequency overvoltage protection module (UFOV Module) should be added to the system.

4-3. VOLTAGE SHUTDOWN

a. The regulator may be equipped with a switch to allow removal of excitation from the field in an emergency or when the generator prime mover must be operated at reduced speed. (See Figure 3-3.) If this switch is not used, it is recommended it be temporarily installed for initial operation.

CAUTION

When used, this switch must always be installed in the input power line to the regulator (terminal 3 or 4). A high flyback voltage could develop and damage the regulator and/or the exciter field if this switch is installed in the dc field circuit (terminal F+ or F-).

b. If the A- terminal is used, a double pole switch must be used for voltage shut down.

CAUTION

To avoid high voltage arcing, the field circuit must never be opened during operation. Also a shutdown circuit using field discharge resistors in the exciter field circuit should not be used. Safe shutdown can be accomplished by interrupting regulator ac power to regulator terminals 3 and 4.

4-4. ADJUSTMENTS

The adjustments pertaining to the regulator and system operation are described in the following paragraphs. These adjustments are made during initial operation and normally do not have to be repeated during the life of the unit.

a. ***Stability Adjustment R4.*** This adjustment provides stable regulating operation. It controls the amount of feedback that is applied to the error amplifier stage. Normally it is factory set in the 75X rotation (CW) position. This setting normally assures good stability, but tends to slow the response time of the generator. If rotated counterclockwise (CCW), the generator response time becomes faster. However, if rotated too far CCW, the generator voltage may oscillate (hunt). It should then be rotated CW well above the point where oscillating occurs. The system voltage instability is likely to occur at no load. If a setting is desired that provides the fastest possible voltage response with stability, an oscilloscope or some voltage recording device should be used.

b. ***Generator Voltage Adjust Rheostat R1.*** The adjustment is provided to control the generator voltage. When adjusted to its maximum resistance position (CCW), minimum generator voltage is obtained. Maximum generator voltage is obtained with minimum resistance (CW).

c. ***Nominal Voltage Range Set Adjust R3.*** This adjustment is provided to vary the limits of R1. Normally R3 is set to provide R1 with an adjustment range of +10% of rated.

4-5. WIRING

Before initial operation is attempted, verify that the regulator is connected for the proper application as shown in either Figure 3-2 or 3-3.

4-6. INITIAL OPERATION

The initial operating instructions are contained in the following paragraphs. These procedures should be completely reviewed and understood, before system operation is attempted. Also, locating controls and adjustments pertinent to system operation would be beneficial.

a. ***Single Unit Operation (No Load).***

a. Start the prime mover and bring up to rated speed. If a voltage shutdown switch is used (see paragraph 4-3), close switch to apply excitation. When this switch is not used, generator voltage will build up automatically. (If field flashing is necessary, refer to paragraph 4-7.)

b. Verify generator voltage. (Any of the following conditions may occur.)

(1) Overvoltage (+20% or more) - If this condition occurs, open the shutdown switch immediately and/or stop the prime mover. Determine the cause of overvoltage. If necessary, refer to the troubleshooting chart.

(2) No voltage build Up - If this condition exists, field flashing may be required, refer to paragraph 4-7.

(3) Undervoltage (-15% or more) - If this condition exists, stop the prime mover and determine the cause of undervoltage. If necessary, refer to the troubleshooting chart.

(4) Voltage Builds Up and Collapses - If this condition exists, stop the prime mover and determine the cause of collapse. If necessary, refer to the troubleshooting chart.

(5) Oscillating Voltage (Hunting) - If this condition exists, refer to the troubleshooting procedures. (Voltage hunting can be caused by an unstable prime mover.)

Katolight Service - Master Repair Manual - Page 1564

c. If the voltage is unstable, perform the following steps:

(1) Loosen the locking nut on R4.

(2) Rotate R4 clockwise (CW) approximately 30° beyond the point that stable operation is obtained. (If stability cannot be obtained by performing these steps, see paragraph 3-2c.)

(3) Tighten lock nut on R4.

d. To adjust the voltage range for ± 10%, verify R1 is adjusted to the center of its travel and perform the following steps:

(1) Loosen the locking nut on R3 and adjust to obtain the rated generator voltage.

(2) Tighten lock nut on R3.

e. The voltage regulator is now ready for load test.

f. Apply load to generator.

g. Verify the voltage regulation is within ± 1/2%. If it is not within these limits, refer to the troubleshooting chart.

h. Alternately remove and apply load to determine if the generator voltage is stable.

i. If the generator voltage becomes unstable, adjust R4 for stable operation. When stability cannot be obtained by performing these steps, refer to the troubleshooting chart.

b. *Instability.* Instability may occur when the no load field requirements of the exciter or generator is near the minimum working voltage of the regulator. Increased stability may be obtained by adding a resistor in series with the field. (See paragraph 3-2c.)

NOTE

Unstable governors are frequently the cause of generator voltage instability. If a stability problem still exists after performing the procedure in paragraph 4-6a., steps f and g, a thorough check of the governor should be made.

4-7. FIELD FLASHING

a. The following procedures is for use on systems where the generator voltage does not build up and no field flash provisions are incorporated. (There is usually sufficient residual magnetism to allow the generator voltage to build up without additional flashing circuit.)

b. With the prime mover at rest (not rotating) apply a dc flashing source across terminals F+ and A- on the regulator. The positive of the flashing source must be connected to F+ and negative to A-.

CAUTION

The flashing source cannot be grounded unless a power isolation transformer is used.

Katolight Service - Master Repair Manual - Page 1565

c. When automatic field flashing is required, a dc source not in excess of 125 V should be used and the circuit must be interconnected as shown in Figure 3-3. A series limiting resistor may also be required to limit flashing current. Typically flashing current is limited to approximately 50% of the no-load exciter field current. An internal blocking diode (CR9) in series with the regulator A- terminal prevents the regulator output from flowing into the flashing source.

4-8. PARALLEL OPERATION

The following paragraphs describe the procedures to be followed to operate two or more generator sets in parallel. In order to insure proper parallel operation, the following requirements must be met:

(1) The voltage regulating systems must cause the generators to share the total KVAR load.

(2) The speed governing system must make the generators share the total kW load.

a. ***Preliminary Instructions.***

(1) It is recommended, before proceeding, that the operation of the components in (and external to) the regulator which facilitates parallel operation be reviewed (paragraph 2-3).

(2) It is essential that the paralleling signal at terminals 1 and 2 of the regulator, have the proper phase relationship with that of the sensing voltages at terminals E1, (E2 must be connected on 3 phase models), and E3. Verify the connections to these terminals are made exactly as shown in Figures 3-2 and 3-3. If reactive differential (cross-current) compensation is desired, the paralleling CT's must be connected as described in paragraph 2-4b. A CT must be selected which will furnish 3 to 5 amperes at rated generator load current.

(3) Prior to operation, the slide adjustment of resistor R25 (on all regulators) should be set to identical positions, near the end of R25 (farthest from the terminal strip). This adjustment will provide maximum reactive droop compensation (droop) signal.

b. ***Preliminary Operation.***

(1) Before attempting to parallel two or more generator sets, it is recommended individual sets be tested to verify that the paralleling features, function properly. The following test may be used:

(a) Place each set in operation in accordance with paragraph 4-6a.

(b) Verify the paralleling CT secondary is not shorted. (Unit parallel switch in **PARALLEL** position.)

(c) Apply 25 to 100% unity power factor load to the set under test. Generator voltage should not change more than 1% and the frequency should decrease if the governor is set for droop operation.

(4) Apply a 25 to 100% 0.8 P.F. (inductive load; voltage should droop from 4 to 6% with rated load. If the voltage rises instead of drooping, reverse the CT sensing leads.

(2) During these tests, verify the voltage and speed do not drift or jump erratically. Also, the generator voltage sequence can be verified at this time.

(3) When the preceding tests has been satisfactorily completed, the sets should parallel properly.

Katolight Service - Master Repair Manual - Page 1566

c. ***Conditions Necessary for Paralleling.*** In order to prevent damage to the generator and/or prime mover, paralleling should be attempted only when the speeds (frequencies) are equal and at the instant when the generator voltages are equal. That is, they have the same phase sequence of voltage and the voltages are in phase.

d. ***Metering.*** In order to initiate paralleling and to check for proper parallel operation, all generators should be equipped with the following monitoring equipment:

(1) AC Voltmeter (1 or 2).

(2) Frequency Meter (1 or 2).

(3) Synchroscope or a set of lights, etc. (indicates an in-phase condition).

(4) Ac Ammeter (1 per set).

(5) kW Meter (1 per set).

(6) KVAR or Power Factor Meter (1 per set).

(7) Field Current Ammeters.

e. ***Sequence of Operation (Parallel).***

(1) The following instructions describe the procedures to be followed for paralleling generators on an isolated bus. These procedures should be completely reviewed and understood, before paralleling is attempted.

(a) Start generator set No. 1.

(b) Close the circuit breaker connecting it to the bus.

(c) Adjust its voltage and frequency to nominal.

(d) Apply the load. (If possible, load should be 10% or more of its kW rating.

(e) Start generator set No. 2.

(f) Adjust its voltage to nominal.

(g) Adjust its speed slightly higher than that of No. 1's.

(h) Observing the synchroscope (or lights), close the circuit breaker (No. 2), when the set is in phase with No. 1.

(i) Immediately after closing the breaker, verify the indication on the ammeter for set No. 2. They should read well within the rating of the generator. If they do not, shut down the system and refer to the troubleshooting chart 5-2. If unstable operation is indicated, see paragraph 4-8. If stable, see next step.

(j) Adjust the speed of No. 2 to the point where each set is carrying the desired share of kW load.

(k) Adjust the voltage of No. 2 until the ammeter reading, of both sets, are near minimum.

(l) If KVAR or power factor meters are available, adjust voltage adjust rheostat for equal or proportional KVAR or power factor reading.

Katolight Service - Master Repair Manual - Page 1567

(m) If the sets are equipped with power factor meters instead of kW meters, alternately adjust the speed and voltage on No. 2 until the ammeter reading are proportional and the power factor readings are equal.

NOTE

To obtain the best results, final adjustments should be made with full load on the bus.

(n) With full load applied, readjust the speed and voltage on No. 2 until the desired load division is obtained.

(2) The best adjustment is obtained when both sets are supplying the same percent of rated current, the kW (or power factor) readings are equal, or the sum of the ammeter currents of the two sets, is minimum.

(3) Upon closing the circuit breaker for set No. 2 (paragraph 4-8e.(1)(h)) improper operation may result. This condition may be accompanied by a very high ammeter reading, the circuit breaker may open, due to current overload, or it may be opened by the reverse power relay. In order to isolate this problem to the faulty speed or voltage regulating system, perform the following steps:

(a) Parallel the generators as instructed in paragraph 4-8e, steps (a) through (h).

(b) Immediately after closing the circuit breaker, observe the kW and KVAR, or power factor meters. The following conditions may occur:

(a) A high ammeter reading accompanied by a large kW unbalance. When this condition exists, the speed regulating system is faulty.

(b) A high ammeter reading accompanied by a KVAR or power factor unbalance but a constant KW. When this condition exists, the voltage regulating system is faulty.

d. Another method of isolating the preceding trouble is to parallel the generators using manual voltage control (if available). If proper operation is obtained, the voltage regulating system may be at fault.

NOTE

Sometimes a stability problem or fighting of these two high gain control systems (governor and voltage regulator) causes paralleling problems that cannot be isolated using manual voltage control.

Katolight Service - Master Repair Manual - Page 1568

SECTION 5
MAINTENANCE, REPLACEMENT PARTS, AND TROUBLESHOOTING

5-1. PREVENTIVE MAINTENANCE

Periodic inspection should be made on this unit to insure it is kept clean and free from dirt and moisture. Also, it is recommended the connections between the regulator and the system be checked and tightened at this time.

5-2. CORRECTIVE MAINTENANCE

Due to a protective transparent conformal coating, repair on the printed circuit board is difficult and should only be attempted by qualified personal. An effective test, used to determine if the regulator is basically operational, given below. Refer to Figure 5-1.

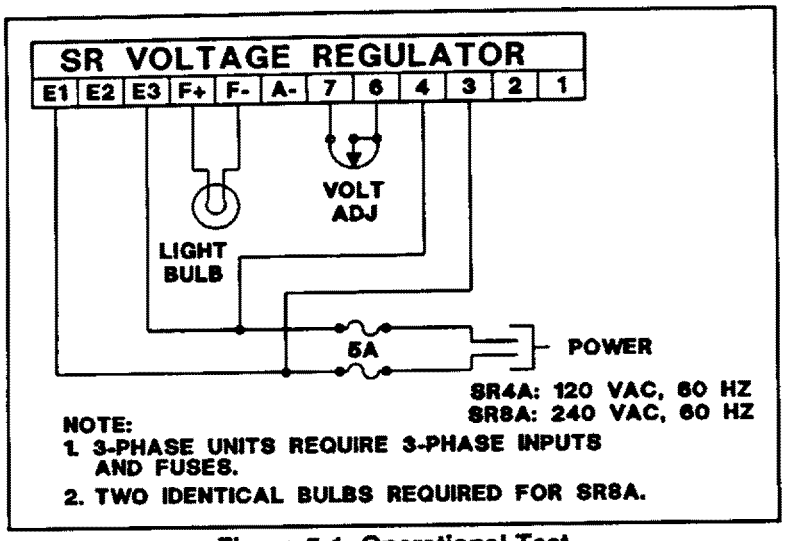

Figure 5-1. Operational Test.

a. Move the wire on the sensing transformer (T1) to the terminal listed below:
   SR4A: Move to 120 V tap.
   SR8A: Move to 240 V tap.

b. Adjust the voltage stability potentiometer (R4) fully counter-clockwise (CCW).

c. Connect the voltage regulator as shown in Figure 5-1. The bulb should be 120 V and not more than 300 W. See Note 1 of the drawing for the SR8A.

d. Adjust the voltage adjust potentiometer for maximum resistance.

e. Connect the regulator to the power source. The bulb should flash on momentarily and then extinquish.

f. Slowly adjust the voltage adjust rheostat toward minimum resistance. The light bulb should reach full brilliance before minimum resistance is attained. (If the light does not illuminate, adjust the centering adjustment (R3).

Katolight Service - Master Repair Manual - Page 1569

g. At the regulating point, a small change in the voltage adjust potentiometer should turn the light bulb on or off. **Note: If the light stays on, the regulator is defective.**

h. This test may not reveal a stability problem, however, rotating the stability adjustment (R4) should affect the light's turn on/turn off time.

i. Before reinstalling the voltage regulator into the system, reconnect the sensing transformer (T1) as it was before performing Step a.

5-3. REPLACEMENT PARTS

The following figure (Figure 5-2) and tables (Table 5-1 and 5-2) contains only those parts and assemblies which are maintenance significant. Figure 5-3 shows the wiring diagram. When ordering replacement parts, from Basler Electric always specify description of the item, the part number, and the quantity.

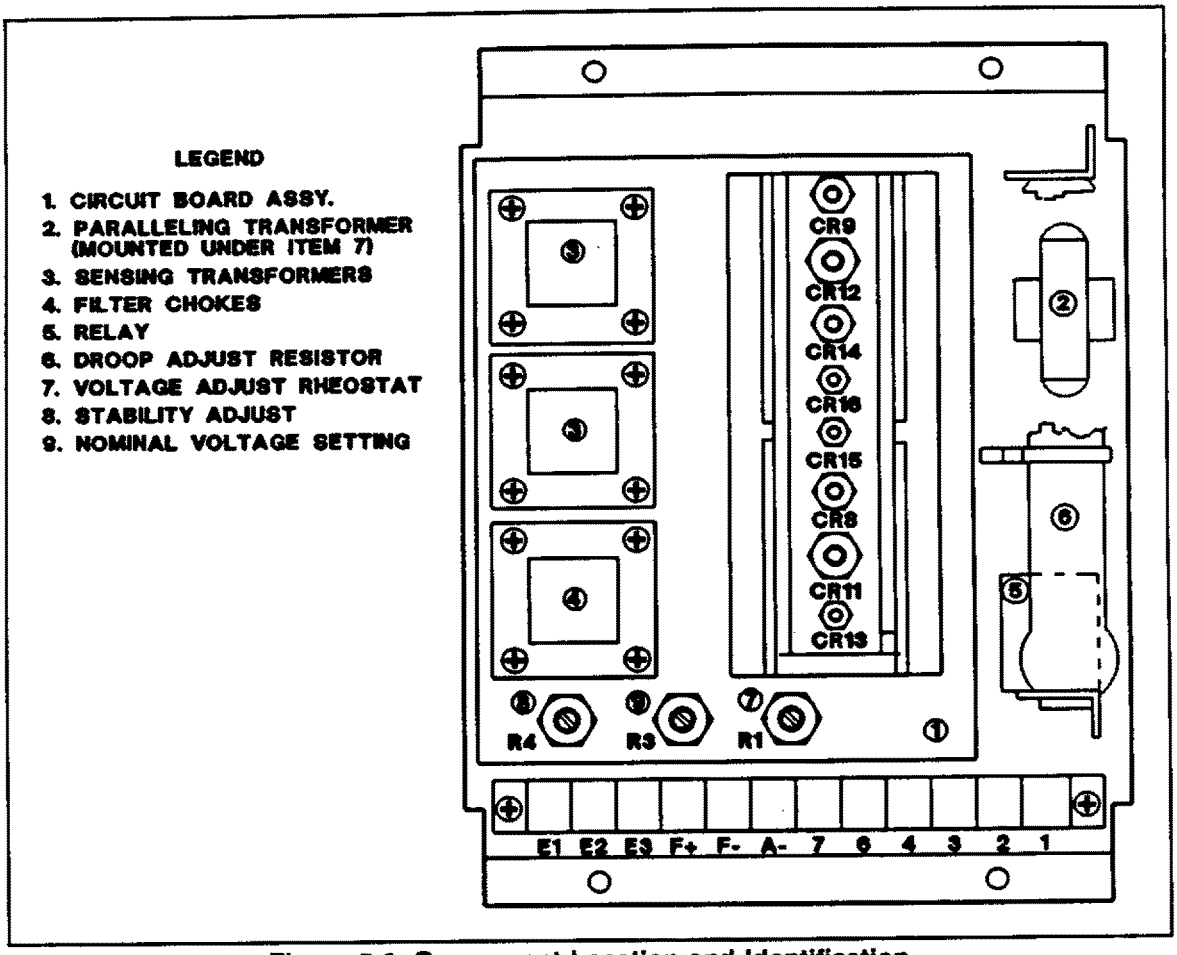

Figure 5-2. Component Location and Identification.

Katolight Service - Master Repair Manual - Page 1570

Table 5-1. SR4A Replacement Parts

Figure 5-1 Legend No.	Reference Designation	Basler Part Number	Description
1	CB1 CB1	9 0177 09 100 9 0177 09 108	SR4A - A Circuit Board Assembly SR4A - E Circuit Board Assembly
2	CR11,CR12	06899	Silicon Controlled Rectifier
-	CR8, CR9, CR13, CR14, CR15, CR16	02677	Diode, 800 PIV, 12 A
3	T3	BE 09024-001	Transformer, Paralleling
4	T1, T1, T2	BE 00309-001 BE 00310-001	Transformer, Sensing, Single-Phase Transformer, Sensing, Three-Phase
5	L1	BE 08794-003	Choke, Filter
6	K1	02686	Relay
6 (Optional)	K1	22686	Relay, Hermetically Sealed
7	R25 R25	02662 03469	Resistor, Adj., Ext.; 1Ω, ± 10%, 100 W Resistor, Adj., Ext.; 1Ω, ± 10%, 100 W
8	R1 R1 R1	03456 02629 04768	Rheostat, Ext., 175Ω, ± 10%, 25 W Rheostat, Ext., 150Ω, ± 10%, 5 W Rheostat, Ext., 150Ω, ± 10%, 4 W

Table 5-2. SR8A Replacement Parts

Figure 5-1 Legend No.	Reference Designation	Basler Part Number	Description
1	CB1 CB1	9 0177 09 102 9 0177 09 109	SR8A - A Circuit Board Assembly SR8A - E Circuit Board Assembly
2	CR11,CR12	02625	Silicon Controlled Rectifier
-	CR8, CR9, CR13, CR14, CR15, CR16	02677	Diode, 800 PIV, 12 A
3	T3	BE 09024-001	Transformer, Paralleling
4	T1, T1, T2	BE 00309-001 BE 00310-001	Transformer, Sensing, Single-Phase Transformer, Sensing, Three-Phase
5	L1	BE 08794-003	Choke, Filter
6	K1	02686	Relay
6 (Optional)	K1	22686	Relay, Hermetically Sealed
7	R25 R25	02662 03469	Resistor, Adj., Ext.; 1Ω, ± 10%, 100 W Resistor, Adj., Ext.; 1Ω, ± 10%, 100 W
8	R1 R1 R1	03456 02629 04768	Rheostat, Ext., 175Ω, ± 10%, 25 W Rheostat, Ext., 150Ω, ± 10%, 5 W Rheostat, Ext., 150Ω, ± 10%, 4 W

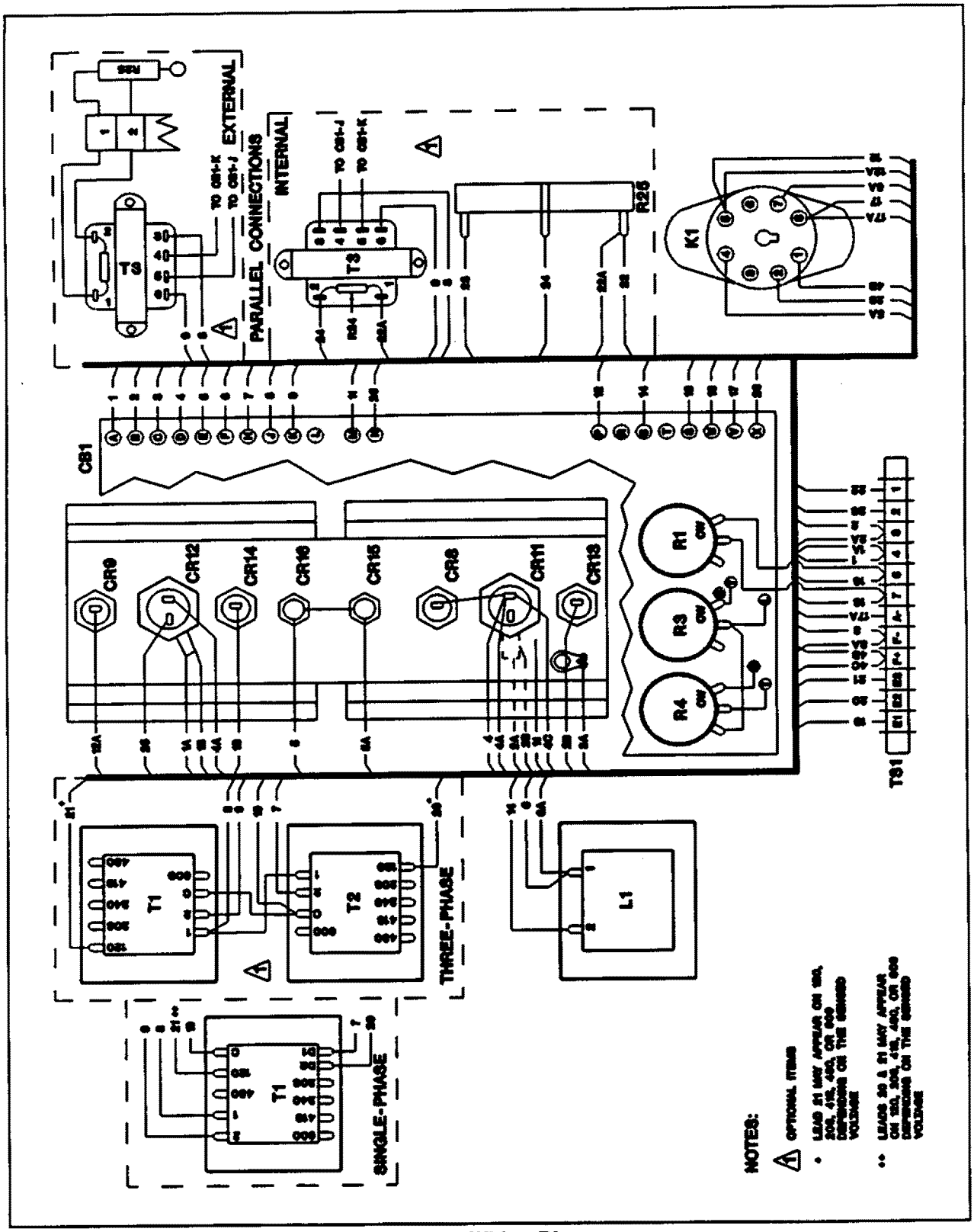

Figure 5-3. Wiring Diagram.

Katolight Service - Master Repair Manual - Page 1572

5-4. WARRANTY AND REPAIR SERVICE

a. Basler SR4A and SR8A are warranted against defective material and workmanship for 18 months from the date of shipment from our factory. Units submitted for warranty repair should be returned to the factory in Highland, Illinois, freight prepaid, with complete description of the installation (See Attachment A) and the reported troubles. Pre-arrangement with either the nearest Basler Sales Office or the Factory will assure the fastest possible turn around time.

b. Out-of-warranty units should also be returned, freight prepaid, to the factory in Highland, Illinois. Repairs to regulators are made at a nominal charge, unless the unit is so extensively damaged that complete replacement is required.

5-5. TROUBLESHOOTING

The more common generator system malfunctions and the appropriate repair procedure are listed in Table 5-3.

Katolight Service - Master Repair Manual - Page 1573

MALFUNCTION
TEST OR INSPECTION
CORRECTIVE ACTION

1. VOLTAGE DOES NOT BUILD UP TO RATED VALUE.

Step 1. Check for low residual voltage and/or incorrect polarity relationship between exciter output and generator field.

If either condition exists, flash the generator field.

If neither condition exists, proceed to Step 2.

Step 2. Verify that the Voltage Shutdown Switch is closed.

If the Voltage Shutdown Switch is open, close the switch.

If the Voltage Shutdown Switch is closed, proceed to Step 3.

Step 3. Verify that the prime mover is operating at rated speed.

If the prime mover is not operating at rated speed, adjust speed.

If prime mover is operating at rated speed, proceed to step 4.

Step 4. Incorrect or missing voltage at regulator power input terminals (3 & 4).

If this condition exists, repair wiring.

If this condition does not exist, proceed to step 5.

Step 5. Verify regulator output voltage at terminals F+, F-, and A-.

If voltage is incorrect or missing, repair wiring and/or adjust/repair regulator.

If voltage is correct, proceed to step 6.

Step 6. Verify that generator output is neither shorted nor overloaded.

If generator output is shorted, remove short and repair wiring.

If generator is overloaded, shed excess load.

If generator output is not overloaded or shorted, proceed to step 7.

Step 7. Verify that the External Voltage Adjust Potentiometer (R1) is properly wired.

If the External Voltage Adjust Potentiometer is incorrectly wired, reconnect wiring properly.

If the External Voltage Adjust Potentiometer is correctly wired, proceed to step 8.

Katolight Service - Master Repair Manual - Page 1574

MALFUNCTION
TEST OR INSPECTION
CORRECTIVE ACTION

1. VOLTAGE DOES NOT BUILD UP TO RATED VALUE - Continued.

Step 8. Verify that the exciter wiring is correct.

If the exciter wiring in incorrect, reconnect the exciter.

If the exciter wiring is correct, proceed to step 9.

Step 9. Check for a defective exciter.

If exciter is defective, repair or replace the exciter.

If the exciter is not defective, proceed to step 10.

Step 10. If the above steps fail to correct the malfunction, replace or repair the voltage regulator.

2. VOLTAGE BUILDS UP UNTIL RELAY ACTUATES, THEN DECAYS.

Step 1. Check for a defective Voltage Adjust Rheostat (R1) and/or defective associated circuitry.

If the circuitry is defective, repair the circuit/wiring.

If the rheostat is defective, replace the rheostat.

If neither the rheostat or the circuit is defective, proceed to step 2.

Step 2. Check for input power to terminals 3 and 4 (Brush-type Rotary Exciters ONLY. All others proceed to step 3.)

If power is not present, check and repair wiring as necessary.

If power is present, proceed to step 3.

Step 3. If the above steps do not correct the malfunction, replace or repair the voltage regulator as necessary.

3. VOLTAGE HIGH AND UNCONTROLLABLE WITH VOLTAGE ADJUST RHEOSTAT.

Step 1. Check for sensing voltage at terminals E1, E2, and E3.

If sensing voltage is not present, repair wiring.

If sensing voltage is present, proceed to step 2.

Katolight Service - Master Repair Manual - Page 1575

MALFUNCTION
TEST OR INSPECTION
CORRECTIVE ACTION

3. VOLTAGE HIGH AND UNCONTROLLABLE WITH VOLTAGE ADJUST RHEOSTAT - Continued.

Step 2. Check that the transfer switch (if used) is in AUTO position. (If transfer switch is not used, proceed to step 3.)

If transfer switch is not in AUTO position, place in AUTO.

If transfer switch is in AUTO position, proceed to step 3.

Step 3. Check for a shorted external Voltage Adjust Potentiometer (R1).

If Voltage Adjust Potentiometer is shorted, replace Voltage Adjust Potentiometer.

If Voltage Adjust Potentiometer is not shorted, proceed to step 4.

Step 4. Verify that the sensing transformer is set to the proper tap.

If transformer tap is improperly selected, reconnect to proper tap.

If transformer tap is properly selected, proceed to step 5.

Step 5. Check for a faulty relay (K1).

If relay K1 is defective, replace relay.

If relay K1 is not defective, proceed to step 6.

Step 6. If the above steps fail to correct the malfunction, replace or repair the voltage regulator as necessary.

4. VOLTAGE HIGH AND CONTROLLABLE WITH VOLTAGE ADJUST RHEOSTAT.

Step 1. Check that the sensing transformer is set to the proper tap.

If transformer tap is improperly selected, reconnect to proper tap.

If transformer tap is properly selected, proceed to step 2.

Step 2. Check that Voltage Range Adjust Potentiometer (R3) is not set too high.

If Voltage Range Adjust Potentiometer is set too high, adjust potentiometer.

If Voltage Range Adjust Potentiometer setting is within limits, proceed to step 3.

Katolight Service - Master Repair Manual - Page 1576

MALFUNCTION
TEST OR INSPECTION
CORRECTIVE ACTION

4. VOLTAGE HIGH AND CONTROLLABLE WITH VOLTAGE ADJUST RHEOSTAT - Continued.

Step 3. Check that the Voltage Adjust Potentiometer (R1) resistance is not too low.

If the Voltage Adjust Potentiometer resistance is too low, replace potentiometer with one of the proper value.

If the Voltage Adjust Potentiometer resistance is proper, proceed to step 4.

Step 4. Verify that the sensing leads are properly connected to the generator and regulator.

If the sensing leads are improperly connected, reconnect properly.

If the sensing leads are properly connected, proceed to step 5.

Step 5. Verify that three-phase sensing is applied to regulator. (Three-phase sensing models only. For single-phase sensing models, proceed to step 6.)

If single-phase sensing is applied, reconnect for three-phase sensing.

If three phase sensing is applied, proceed to step 6.

Step 6. Verify the accuracy and connection of the voltmeter.

If voltmeter is improperly connected, reconnect voltmeter properly.

If voltmeter is defective, replace voltmeter.

If voltmeter is connected properly and not defective, proceed to step 7.

Step 7. If the above steps fail to correct the malfunction, replace or repair the voltage regulator as necessary.

5. VOLTAGE LOW AND CONTROLLABLE WITH VOLTAGE ADJUST RHEOSTAT.

Step 1. Check that the sensing transformer is set to the proper tap.

If transformer tap is improperly selected, reconnect to proper tap.

If transformer tap is properly selected, proceed to step 2.

Step 2. Check that Voltage Range Adjust Potentiometer (R3) is not set too low.

If Voltage Range Adjust Potentiometer is set too low, adjust potentiometer.

If Voltage Range Adjust Potentiometer setting is within limits, proceed to step 3.

Katolight Service - Master Repair Manual - Page 1577

MALFUNCTION
TEST OR INSPECTION
CORRECTIVE ACTION

5. VOLTAGE LOW AND CONTROLLABLE WITH VOLTAGE ADJUST RHEOSTAT - Continued.

Step 3. Check that prime mover is operating at rated speed.

If prime mover is operating below rated speed, adjust prime mover speed to rated.

If prime mover is operating at rated speed, proceed to step 4.

Step 4. Verify that the sensing leads are properly connected to the generator and regulator.

If the sensing leads are improperly connected, reconnect properly.

If the sensing leads are properly connected, proceed to step 5.

Step 5. Verify the accuracy and connection of the voltmeter.

If voltmeter is improperly connected, reconnect voltmeter properly.

If voltmeter is defective, replace voltmeter.

If voltmeter is connected properly and not defective, proceed to step 6.

Step 6. If the above steps fail to correct the malfunction, replace or repair the voltage regulator as necessary.

6. POOR REGULATION.

Step 1. Verify that exciter/generator field requirements are not in excess of voltage regulator capability.

If regulator application is incorrect for regulator, contact Basler Electric.

If regulator application is within regulator limits, proceed to step 2.

Step 2. Verify that input voltage at terminals 3 and 4 is of the correct value.

If input voltage is incorrect, apply correct voltage to terminals 3 and 4.

If input voltage is correct, proceed to step 3.

Step 3. Check that the voltmeter is connect to the same location ast the regulator sensing.

If voltmeter is not connected to same location as the regulator sensing, reconnect voltmeter.

If voltmeter is properly connected, proceed to step 4.

Katolight Service - Master Repair Manual - Page 1578

MALFUNCTION
TEST OR INSPECTION
CORRECTIVE ACTION

6. POOR REGULATION - Continued.

Step 4. Check that the generator output waveform is not distorted due to harmonic content (Regulator senses average voltage; meter may be indicating RMS values.)

If this condition exists, consult the generator manufacturer.

If this condition does not exist, proceed to step 5.

Step 5. Check that the UNIT/PARALLEL switch (if installed, if not go to step 6) is in the PARALLEL position when the generator is paralleled and in the UNIT position when the generator is operating alone. Also check that the switch functions properly.

If the switch is not in the proper position, set switch to correct position.

If the switch is defective, replace switch.

If the switch is set to the proper position, proceed to step 6.

Step 6. Check that load is not unbalanced as regulator averages all three phases together. (Three-Phase Sensing ONLY. All others proceed to step 7.)

If load is unbalanced, balance load.

If load is balanced, proceed to step 7.

Step 7. Verify that prime mover is operating at rated speed.

If prime mover is not operating at rated speed, change prime mover speed to rated.

If prime mover is operating at rated speed, proceed to step 8.

Step 8. Check for fault in either exciter or generator.

If a fault exists, correct fault condition.

If a fault does not exist, proceed to step 9.

Step 9. If the above steps fail to correct the malfunction, replace or repair the voltage regulator as necessary.

7. POOR VOLTAGE STABILITY.

Step 1. Verify that the generator frequency is stable.

If the frequency is unstable, consult with the governor manufacturer.

If the frequency is stable, proceed to step 2.

Katolight Service - Master Repair Manual - Page 1579

MALFUNCTION
TEST OR INSPECTION
CORRECTIVE ACTION

7. POOR VOLTAGE STABILITY - Continued.

Step 2. Verify that voltage does not fluctuate to the point when K1 either energizes or de-energizes.

If this condition occurs, refer to MALFUNCTION 2.

If this condition does not exist, proceed to step 3.

Step 3. Verify that the sensing voltage and input power are not taken from the same power isolation transformer secondary.

If the above condition exists, reconnect sensing to a separate source.

If the above condition does not exist, proceed to step 4.

Step 4. Verify that R4 is not maladjusted.

If R4 is maladjusted, adjust R4 to proper setting.

If R4 is not maladjusted, proceed to step 5.

Step 5. Verify that the no-load field voltage is at rated.

If the no-load field voltage is below rated, refer to paragraph 3-2c,

If the no-load field voltage is at rated, proceed to step 6.

Step 7. Check for fault in either exciter or generator.

If a fault exists, correct fault condition.

If a fault does not exist, proceed to step 8.

Step 8. If the above steps fail to correct the malfunction, replace or repair the voltage regulator as necessary.

8. VOLTAGE RECOVER SLOW WITH LOAD CHANGE.

Step 1. Verify that the correct regulator is being used for the application.

If the incorrect regulator is being used, contact Basler Electric.

If the correct regulator is being used, proceed to step 2.

Step 2. Verify that R4 is not maladjusted.

If R4 is maladjusted, adjust R4 to proper setting.

If R4 is not maladjusted, proceed to step 3.

Katolight Service - Master Repair Manual - Page 1580

MALFUNCTION
TEST OR INSPECTION
CORRECTIVE ACTION

8. VOLTAGE RECOVER SLOW WITH LOAD CHANGE - Continued.

Step 3. Verify that the generator frequency is stable.

If the frequency is unstable, consult with the governor manufacturer.

If the frequency is stable, proceed to step 4.

Step 4. If the above steps fail to correct the malfunction, replace or repair the voltage regulator as necessary.

9. PARALLEL GENERATORS DO NOT DIVIDE REAL KW LOAD EQUALLY.

Consult with the governor manufacturer for improving the power sensing of the governor and/or adjustment of the governor droop setting.

10. NO REACTIVE DROOP COMPENSATION CAN BE OBTAINED FOR PARALLEL GENERATORS.

Step 1. Verify that the tap on R25 is not set to the minimum position.

If the tap is set to the minimum position, adjust R25 to obtain the required droop.

If the tap is set properly, proceed to step 2.

Step 2. Verify that the Parallel CT provides the required 3 to 5 A secondary current.

If the CT does not provide the required 3 to 5 A secondary current, refer to paragraph 3-3.

If the CT does provide the required 3 to 5 A secondary current, proceed to step 3.

Step 3. Verify that terminals 1 and 2 of the regulator are shorted by the UNIT/PARALLEL switch.

If the switch is set to UNIT, set switch to PARALLEL.

If the terminals are not shorted, replace the switch and/or repair the wiring.

If the terminals are shorted, proceed to step 4.

Step 4. If the above steps fail to correct the malfunction, replace or repair the voltage regulator as necessary.

Katolight Service - Master Repair Manual - Page 1581

MALFUNCTION
TEST OR INSPECTION
CORRECTIVE ACTION

11. PARALLEL GENERATORS DO NOT DIVIDE REACTIVE KVAR LOAD EQUALLY. (Circulating Reactive Current Between Generators.

Step 1. Verify that the tap on R25 is not set tc the minimum position.

If the tap is set to the minimum position, adjust R25 to obtain the required droop.

If the tap is set properly, proceed to step 2.

Step 2. Verify that the Parallel CT provides the required 3 to 5 A secondary current.

If the CT does not provide the required 3 to 5 A secondary current, refer to paragraph 3-3.

If the CT does provide the required 3 to 5 A secondary current, proceed to step 3.

Step 3. Verify that the paralleling CT's polarity is correct.

If the CT's polarity is incorrect, reverse the CT secondary leads.

If the CT's polarity is correct, proceed to step 4.

Step 4. Verify that the paralleling CT is in the correct generator phase (line).

If the CT is not in the correct phase, place CT in correct line.

If the CT is in the correct phase, proceed to step 5.

Step 5. Check that all paralleled generators have the same type of sensing (either single-phase or three-phase).

If all paralleled generators do not have the same type of sensing, adjust R25 to compensate.

If all paralleled generators do have the same type of sensing, proceed to step 6.

Step 6. If the above steps fail to correct the malfunction, replace or repair the voltage regulator as necessary.

Katolight Service - Master Repair Manual - Page 1582

INSTRUCTION MANUAL
FOR

STATIC VOLTAGE REGULATOR
Models: SSR 32-12
SSR 63-12
SSR 125-12

Part Numbers: 9 1859 00 100 through 9 1859 00 102

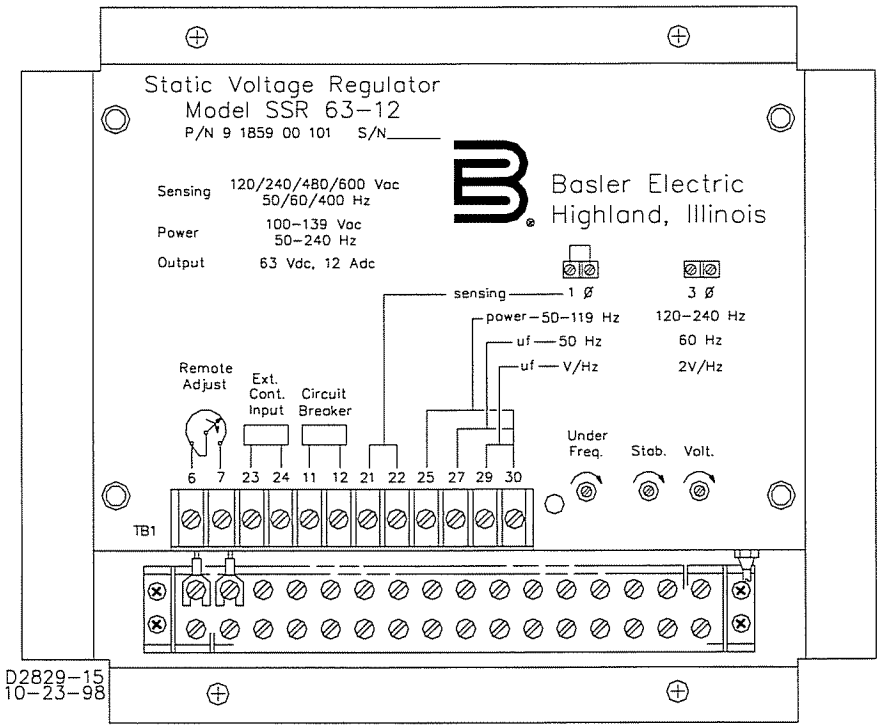

Basler Electric

Publication Number: 9 1859 00 990
Revision: P 08/02

INTRODUCTION

This manual provides information concerning the operation and installation of Static Voltage Regulators. To accomplish this, the following is provided.

- Specifications
- Functional Description
- Installation Information
- Operation
- Maintenance

WARNING

TO AVOID PERSONAL INJURY OR EQUIPMENT DAMAGE, ONLY QUALIFIED PERSONNEL SHOULD PERFORM THE PROCEDURES PRESENTED IN THIS MANUAL.

CAUTION

Meggers and high potential test equipment should be used with extreme care. Incorrect use of such equipment could damage components contained in the device.

First Printing: July 1986

Printed in USA

© 1998 — 2002 Basler Electric Co., Highland, IL 62249

August 2002

CONFIDENTIAL INFORMATION
OF BASLER ELECTRIC COMPANY, HIGHLAND, IL. IT IS LOANED FOR CONFIDENTIAL USE, SUBJECT TO RETURN ON REQUEST, AND WITH THE MUTUAL UNDERSTANDING THAT IT WILL NOT BE USED IN ANY MANNER DETRIMENTAL TO THE INTEREST OF BASLER ELECTRIC COMPANY.

It is not the intention of this manual to cover all details and variations in equipment, nor does this manual provide data for every possible contingency regarding installation or operation. The availability and design of all features and options are subject to modification without notice. Should further information be required, contact Basler Electric Company, Highland, Illinois.

BASLER ELECTRIC
ROUTE 143, BOX 269
HIGHLAND, IL 62249 USA
http://www.basler.com, info@basler.com
PHONE 618-654-2341 **FAX 618-654-2351**

CONTENTS

SECTION 1 GENERAL INFORMATION 1-1

Description 1-1
Specifications 1-1
Accessories 1-3
Spike Suppression Module 1-3

SECTION 2 INSTALLATION 2-1

Mounting 2-1
- Voltage Regulator Mounting 2-1
- Spike Suppression Module Mounting 2-2

Interconnection 2-2
- General 2-2
- Regulator Sensing Connections 2-3
- Frequency Selection 2-3
- Field Power Connection 2-7
- Input Power 2-7
- External Control Input 2-7
- Remote Voltage Adjust Rheostat 2-7
- Parallel Compensation 2-8
- Reactive Droop Compensation 2-8
- Reactive Differential (Cross-Current) Compensation 2-8
- Overexcitation Circuit Breaker 2-8

SECTION 3 OPERATION 3-1

Front Panel Controls and Indicators 3-1
- VOLT Adjustment 3-1
- STAB Adjustment 3-1
- FREQ Adjustment 3-1
- UNDER FREQ Indicator 3-1
- DROOP ADJUST Control 3-1

Optional Voltage Shutdown Switch 3-1
Initial Operation 3-2
- Preliminary Instructions 3-2
- System Check-out 3-2

Field Flashing 3-3
Parallel Operation 3-3
- Preliminary Instructions 3-3
- Preliminary Operation 3-3
- Conditions Necessary for Paralleling 3-4
- Paralleling Operation 3-4

SECTION 4 MAINTENANCE 4-1

Preventive Maintenance 4-1
Corrective Maintenance 4-1
Warranty and Repair Service 4-1
Troubleshooting 4-1
Operational Testing 4-1

SECTION 5 REPLACEMENT PARTS 5-1

General 5-1

CONTENTS-Continued

SECTION 6 MANUAL CHANGE INFORMATION 6-1

Changes 6-1

Katolight Service - Master Repair Manual - Page 1587

SECTION 1 • GENERAL INFORMATION

DESCRIPTION

The Basler SSR Series Voltage Regulators precisely controls the output voltage of an ac electric generating system by controlling the amount of current supplied to the exciter (or generator) field. The SSR Series Voltage Regulators are for use on brushless generators that require a high performance regulator and use a wide range of accessory devices.

Compatible with a variety of input voltages and frequencies, the SSR Series Voltage Regulator features a selectable V/Hz or 2-V/Hz frequency characteristic. The 2-V/Hz characteristic is for improved prime mover response during large motor starting and/or large load pick-up. The greater voltage drop means less kW loading will be seen by the prime mover and thus, a faster speed recovery.

Both the SSR 63-12 and SSR 125-12 have full-wave outputs, while the SSR 32-12 is of the half-wave output type.

SPECIFICATIONS

Refer to Table 1-1 for the electrical specifications and to Table 1-2 for the physical specifications.

Table 1-1. Electrical Specifications

Input Power Requirements **SSR 32-12:** **SSR 63-12:** **SSR 125-12:**	 100 to 139 Vac ±10% (Nominal), 1 ϕ, 50 to 240 Hz., 700 VA 100 to 139 Vac ±10% (Nominal), 1 ϕ, 50 to 240 Hz., 1200 VA 190 to 277 Vac ±10% (Nominal), 1 ϕ, 50 to 240 Hz., 2400 VA
Input Sensing Requirements: **50 Hz:** **60 Hz:**	 90-110/170-242/340-457 Vac, 3 ϕ (selectable 1 ϕ) 90-132/187-264/374-528/540-660 Vac, 3 ϕ (selectable 1 ϕ)
Input Sensing Burden:	3.5 VA per phase.
Paralleling Compensation Input:	5 A from CT at rated load with 10 VA maximum. burden at 0.8 pf.
Regulation Accuracy:	±0.25% from no-load to full-rated load.
Thermal Stability:	±0.5% for any 50°C change within operating range.
Power Dissipated:	30 W maximum.
Power Output: **SSR 32-12:** **SSR 62-12:** **SSR 125-12:**	 32 Vdc/12 A Continuous; 50 Vdc/20 A Forcing (115 V input). 63 Vdc/12 A Continuous; 100 Vdc/20 A Forcing (115 V input). 125 Vdc/12 A Continuous; 200 Vdc/20 A Forcing (230 V input).

Table 1-1. Electrical Specifications - Continued

Minimum Field Resistance: **SSR 32-12:** **SSR 63-12:** **SSR 125-12:**	 2.5 ohms 5.0 ohms 10.0 ohms
Frequency Compensation:	Variable. Frequency roll-off is preset at the factory for 48.5 Hz. (50 Hz. systems) and 58.5 Hz. (60 Hz. systems). Either V/Hz or 2 V/Hz can be selected. Refer to Figures 1-1 and 1-2.
Voltage Build-Up:	From 6 volts residual or more (12 V for the SSR 125-12 only).
Internal Voltage Adjust Range (Minimum):	For 120 V Tap: 90 to 132 Vac; For 240 V Tap: 170 to 264 Vac; For 480 V Tap: 340 to 528 Vac; For 600 V Tap: 540 to 660 Vac.
Overexcitation Protection:	Removes excitation if the regulator output is at 95% of rated forcing voltage for more than 60 seconds or instantaneously (<1 second) if output exceeds 130 % of rated forcing voltage. Refer to Figure 1-3.
External Voltage Adjust Range:	±10% of nominal.
Optional Circuit Breaker:	Rated at 20 A, 277 Vac, 50/60 Hz., with a 5000 A interrupting capacity.

Table 1-2. Mechanical Specifications

Storage Temperature Range:	-40°C (-40°F) to +85°C (+185°F).
Operating Temperature Range:	-40°C (-40°F) to +70°C (+158°F).
Humidity:	The control module is totally protected for humidity and condensation by encapsulation.
Vibration:	Withstands the following: 5 to 26 Hz. at 1.2 G's; 27 to 52 Hz. at 0.036 inch double amplitude; 53 to 1000 Hz. at 5.0 G's.
Shock:	Withstands 15 G's in each of three mutually perpendicular planes.
Weight:	12 lbs. (5.5 kg) net; 15 lbs. (7.0 kg) shipping.
Overall Dimensions: **Height:** **Width:** **Depth:**	 9.0 inches (230 mm) 11.1 inches (281 mm) 3.6 inches (93 mm)
Optional Circuit Breaker: **Shock:** **Vibration:** **Weight:**	 Withstands 100 G's. Withstands 10 G's. 10 ounces (280 grams) net.

Katolight Service - Master Repair Manual - Page 1589

ACCESSORIES

The SSR Series Voltage Regulators is designed to be compatible with any of the Basler accessories and equipment listed below:

a. Remote mounted Overexcitation Circuit Breaker (P/N 9 1859 00 014). Refer to Section 2 for more information.

b. VAR/Power Factor Controller (SCP 250)

c. Series Boost Option (SBO 160)

d. Current Transformers (CT2 through CT50)

e. Exciter Diode Monitor (EDM 200)

f. Minimum/Maximum Excitation Limiter (EL 200)

g. Auto-Synchronizer (BE3-25A)

h. Auto-Synchronizer (BE1-25A)

i. Line Drop Compensator (LDC 300)

j. Manual Voltage Control (MVC 112)

k. Low and Medium Power Isolation Transformers. Refer to Table 1-3.

Table 1-3. Transformer Selection

Voltage	SSR 32-12	SSR 63-12	SSR 125-12
240/480	BE22207-001	BE22209-001	BE12819-001
600	BE22207-001	BE11050-001	BE22209-001
2400/4160	BE22208-001	BE13487-001	BE12818-001
7200	BE22210-001	BE22136-001	BE22136-001
13800	BE22210-001	BE21327-001	BE21327-001

* Transformers used with the SSR 32-12 are designed to be compatible with the regulator's half-wave dc output.

SPIKE SUPPRESSION MODULE

Some higher impedance power sources (such as power isolation transformers and PMG's) may have enough inductance to cause potentially damaging voltage spikes in the power output stage of the SSR Voltage Regulator. In these cases, Basler Electric recommends the use of the Spike Suppression Module which was supplied with the Regulator to filter out these potentially damaging voltage spikes. Refer to Section 2 for mounting and interconnection instructions.

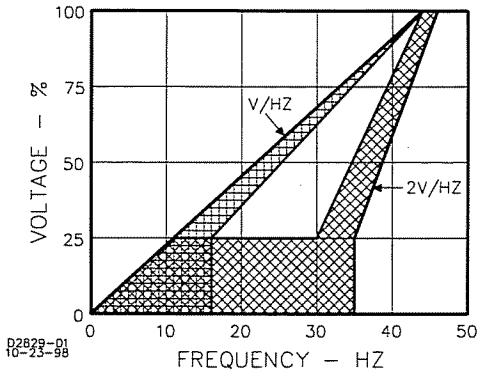

Figure 1-1. 50 Hz Frequency Compensation

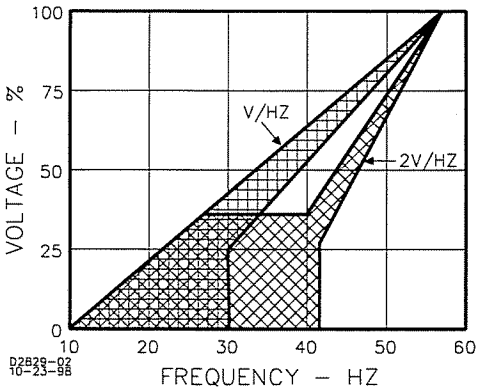

Figure 1-2. 60 Hz Frequency Compensation

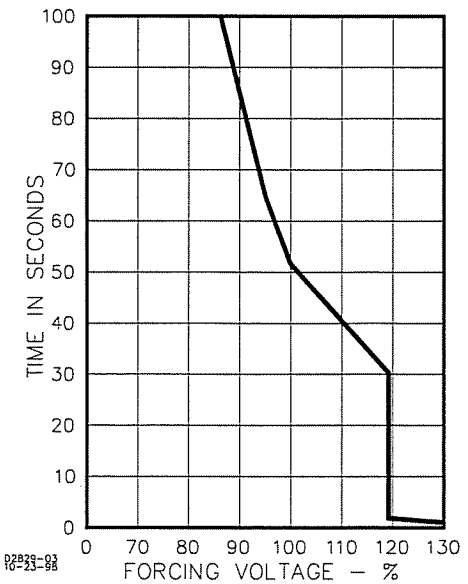

Figure 1-3. Overexcitation Shutdown Curve

Katolight Service - Master Repair Manual - Page 1591

SECTION 2 • INSTALLATION

MOUNTING

Voltage Regulator Mounting

The Voltage Regulator will operate when mounted in any position, however, it should be vertically mounted to obtain optimum cooling. The Regulator can be mounted in any location where the ambient temperature does not exceed the operational limits. Due to its rugged construction, the Regulator can be mounted directly on the generator. Mounting hardware should be selected based upon the vibration and shock expected to be encountered during shipping/transport and normal operation. Refer to Figure 2-1 for the outline drawing of the unit which provides overall and mounting dimensions.

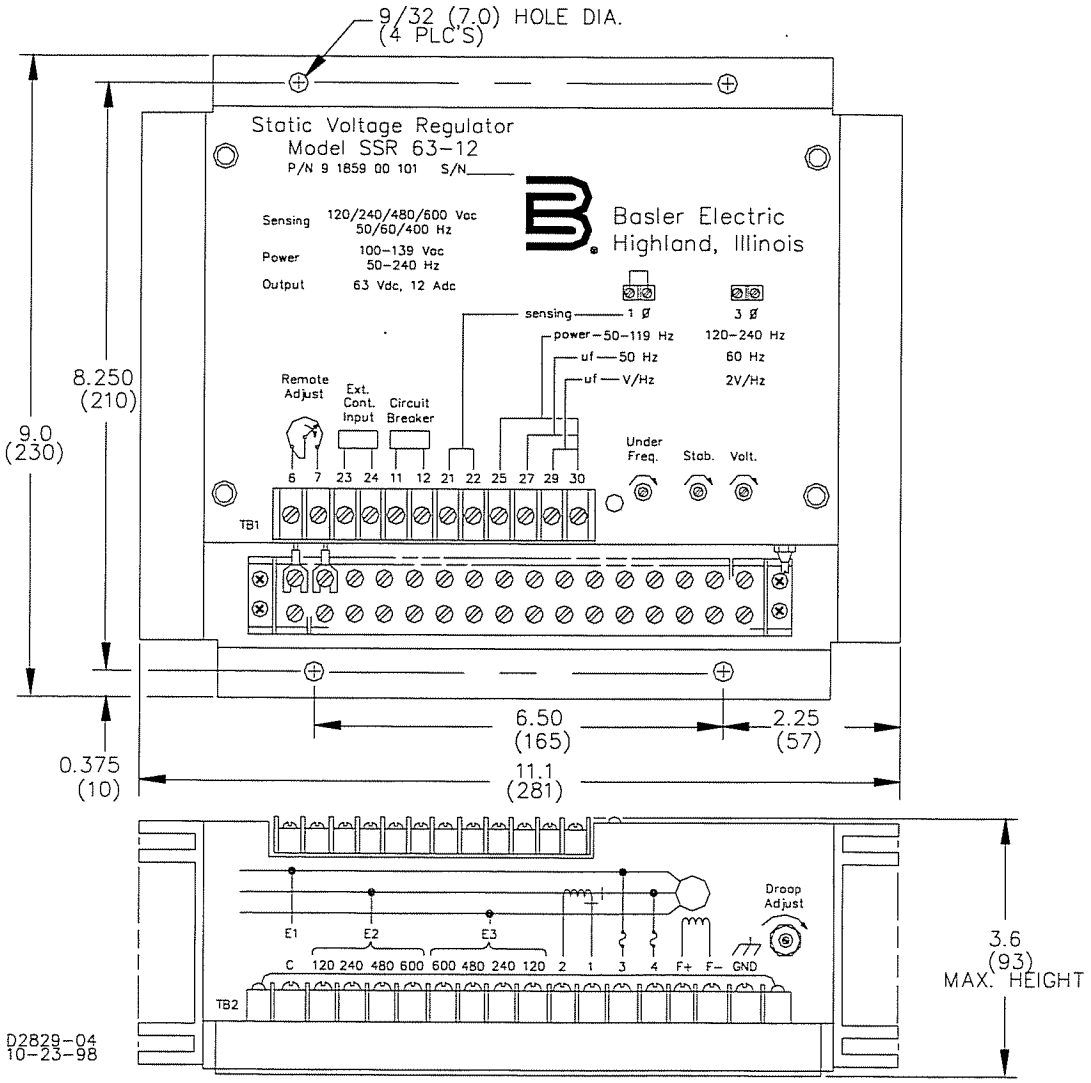

NOTE: ALL DIMENSIONS ARE IN INCHES (MILLIMETERS)

Figure 2-1. SSR Regulator, Outline Drawing

Spike Suppression Module Mounting

The Spike Suppression Module will operate when mounted in any position. The Spike Suppression Module can be mounted in any location where the ambient temperature does not exceed the operational limits. Due to its rugged construction, the Spike Suppression Module can be mounted directly on the generator. Mounting hardware should be selected based upon the vibration and shock expected to be encountered during shipping/transport and normal operation. Refer to Figure 2-2 for the outline drawing of the unit which provides overall and mounting dimensions.

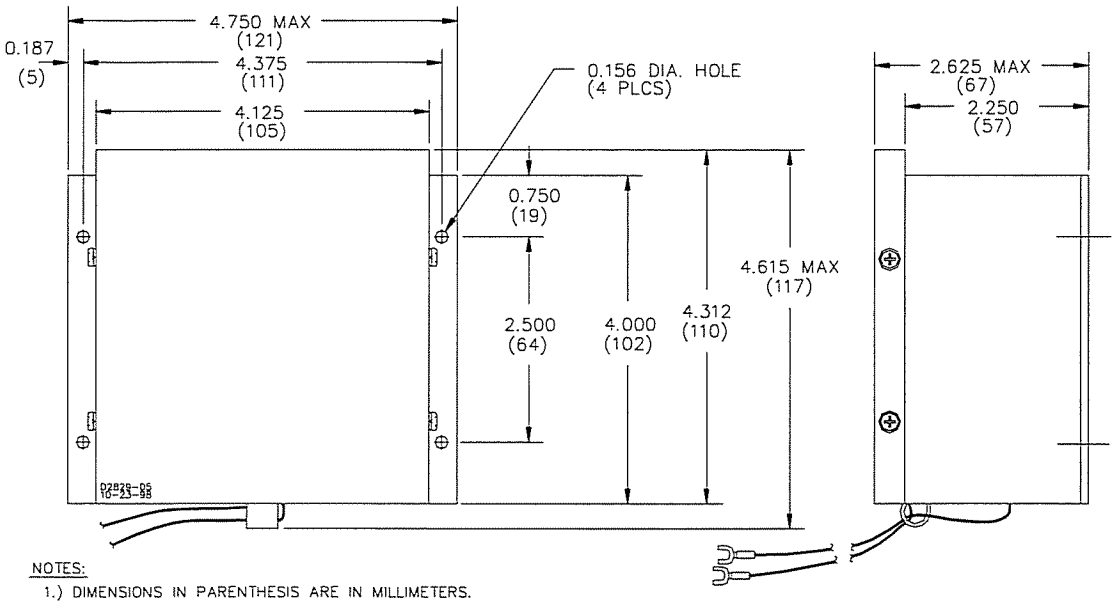

Figure 2-2. Spike Suppression Module, Outline Drawing

INTERCONNECTION

CAUTION

Meggers and high potential test equipment must not be used. Incorrect use of such equipment could damage the semiconductors in the Regulator.

General

The Regulator must be connected to the generator system as instructed in this section and as shown in the basic interconnection diagrams (refer to Figures 2-3 through 2-5).

NOTE

If the input power source is from a power isolation transformer or a PMG, the Spike Suppression Module should be connected to provide transient voltage spike protection for the Regulator.

Katolight Service - Master Repair Manual - Page 1593

Regulator Sensing Connections

Three-Phase Sensing

The SSR Voltage Regulators contain internal sensing transformers with taps for the various input sensing voltages. Connect the input sensing (external terminals) as follows (refer to Figure 2-3):

(a) Connect terminal TB2-E1 (C) to phase A.

(b) Connect terminal TB2-E2 (Taps for 120, 240, 480, and 600 Vac are provided) to phase B.

CAUTION

Be sure to use the same value tap for TB2-E3 that was used for TB2-E2.

(c) Connect terminal TB2-E3 (Taps for 120, 240, 480, and 600 Vac are provided) to phase C.

(d) Be sure to remove any jumper installed across terminals TB1-21 and TB1-22.

Single-Phase Sensing

The SSR Voltage Regulators use the same internal sensing transformer for single-phase sensing that it uses for three-phase sensing. Connect the input sensing (external terminals) as follows (refer to Figure 2-4):

(a) Install a jumper between terminals TB1-21 and TB1-22.

(b) Connect terminal TB2-E1 (C) to phase A.

(c) Connect terminal TB2-E3 (Taps for 120, 240, 480, and 600 Vac are provided) to phase C.

Frequency Selection

Match the regulator underfrequency range to the generator frequency as follows:

50 Hz Systems (48 - 53 Hz Underfrequency)

Connect a jumper between terminals TB1-27 and TB1-30.

60 Hz Systems (54 - 63 Hz Underfrequency)

Remove any jumpers connecting terminals TB1-27 and TB1-30.

In either of the above cases, the frequency compensation slope can be selected for either volts/Hertz or twice volts/Hertz as follows:

Volts/Hertz

Connect a jumper between terminals TB1-29 and TB1-30.

Twice Volts/Hertz

Remove any jumpers connecting terminals TB1-29 and TB1-30.

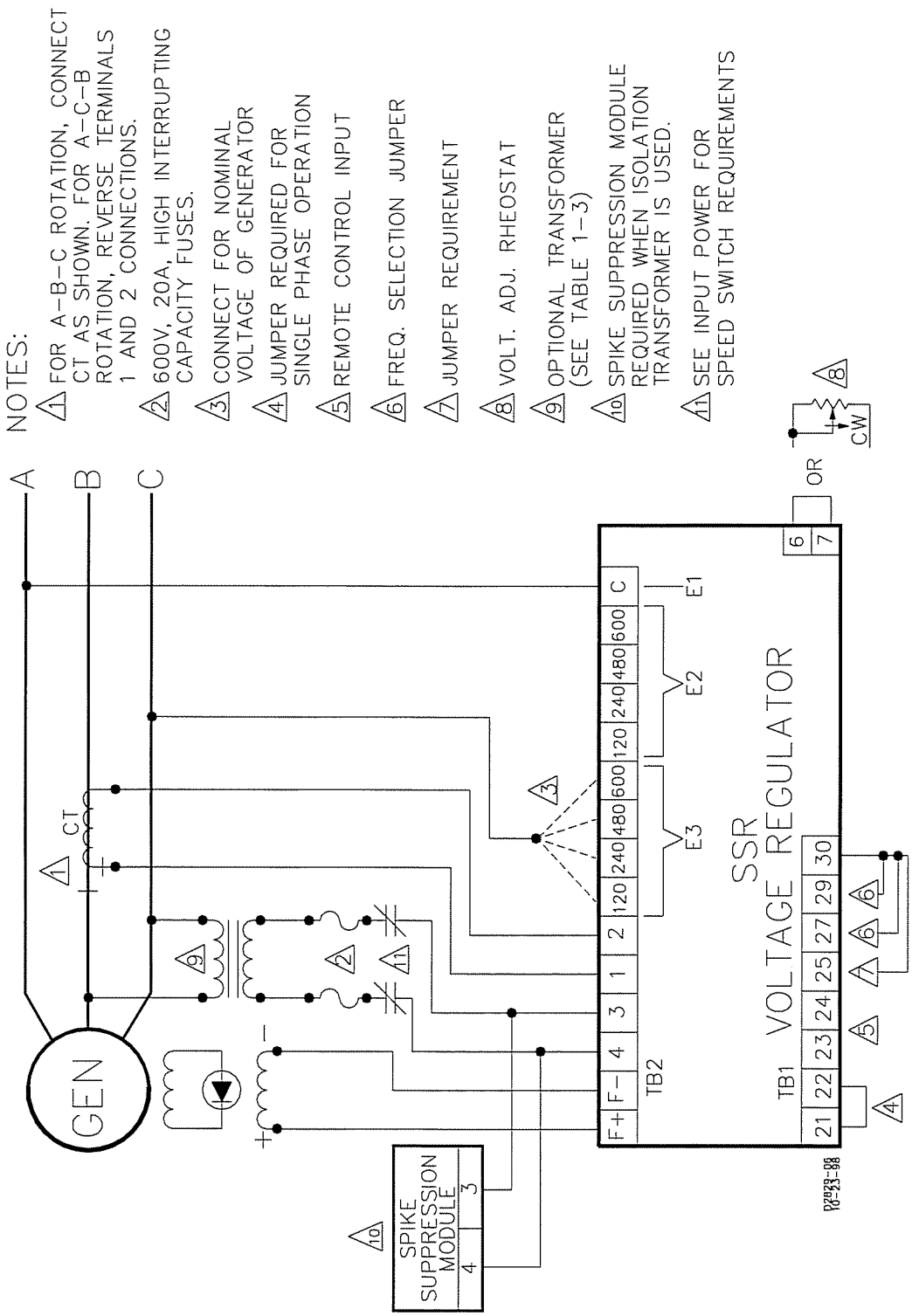

Figure 2-3. Typical SSR Voltage Regulator Interconnection, Single-Phase Sensing

Katolight Service - Master Repair Manual - Page 1595

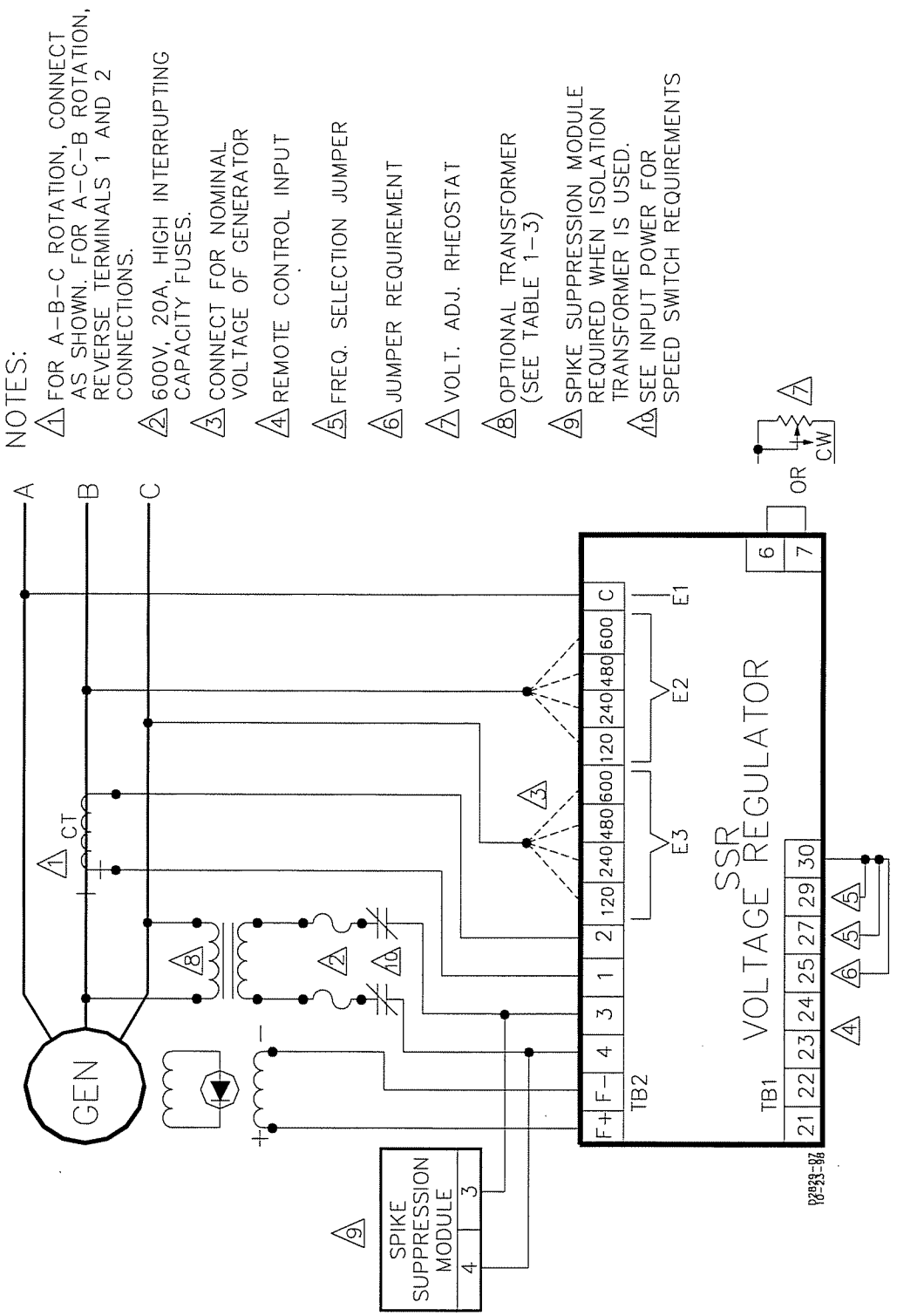

Figure 2-4. Typical SSR Voltage Regulator Interconnection, Three-Phase Sensing

Katolight Service - Master Repair Manual - Page 1596

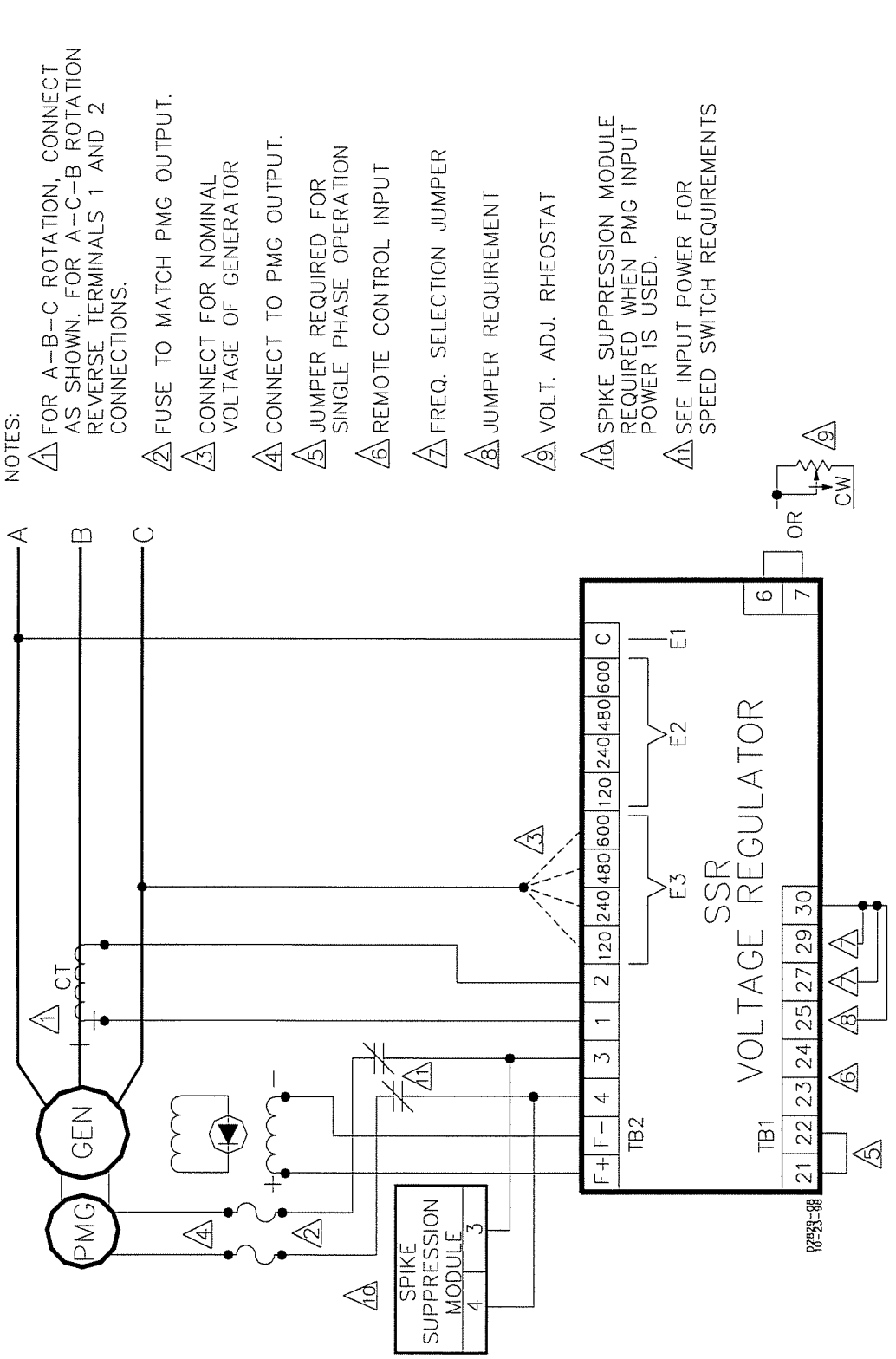

Figure 2-5. SSR Voltage Regulator Interconnection with PMG

Katolight Service - Master Repair Manual - Page 1597

Field Power Connection

(1) Be sure to observe polarity and connect the field leads to terminals TB2-F+ and TB2-F-.

(2) The dc resistance of the field to which the Regulator is connected (terminals TB2-F+ and TB2-F-) must be equal to, or greater than that specified in Table 1-1. If the resistance is less than the specified minimum, a resistor must be added in series with the field. This resistor value plus the field resistance, must be equal to or greater than the minimum field resistance.

Input Power

(1) The input power connected to terminals TB2-3 and TB2-4 should be fused and may be taken from any generator lines that provide the correct voltage (line-to-line or line-to-neutral) as specified in Table 1-1. If line-to-neutral is used with a grounded neutral, it is strongly recommended that a power isolation transformer be used to limit the possibility of a ground loop. The phase relationship on this input to the other inputs is not important.

(2) When the generator output voltage does not match the values given in Table 1-1, a power transformer must be used to match the generator output to the Regulator input (refer to Table 1-3 for proper transformer selection). If excessive voltage is applied to the Regulator, the Regulator will be damaged.

CAUTION

Without the use of a power isolation transformer, any ground in the field circuit and another ground in the generator output could result in Regulator failure.

NOTE

On prime mover applications that require a long time to reach rated RPM, a speed switch setting should be coordinated such that input voltage applied to the SSR is above the SSR minimum residual build-up level. The minimum residual build-up level is 6 Vac for the SSR32-12 and SSR63-12, and 12 Vac for the SSR125-12.

(3) If the field or field flashing circuit is grounded, a power transformer must be used to isolate the Regulator input from ground.

(4) If the SSR is powered directly from a 50 Hz or 60 Hz generator output (as in Figures 2-3 and 2-4), install a jumper between terminals TB1-25 and TB1-30. If the SSR is powered from a special source, such as a PMG (as in Figure 2-5), the frequency of the incoming power must be considered. If this frequency is less than 120 Hz, install a jumper between terminals TB1-25 and TB1-30. If the input power frequency is between 120 Hz and 240 Hz, then remove any jumpers connecting terminals TB1-25 and TB1-30.

External Control Input

When using an external control device such as a VAR/Power Factor Controller (SCP 250), Auto-Synchronizer (BE1-25A or BE3-25A), and/or a Minimum/Maximum Excitation Limiter (EL 200), then connect them in series with terminals TB1-23 and TB1-24. Refer to the accessory item manuals for proper connection.

Remote Voltage Adjust Rheostat

When using an external voltage adjust rheostat, connect the rheostat to terminals TB1-6 and TB1-7. Use the potentiometer supplied with the Regulator (as a loose item) or replace it with any 5 kW, 2 Watt rheostat/potentiometer. If using only the internal voltage adjust, install a jumper across terminals TB1-6 and TB1-7. If shielding of the wiring is required due to its location in a high noise environment, connect the shield to terminal 30 of the SSR. If connected anyplace else, the shielding will not have any effect.

Parallel Compensation

(1) When it is required to operate the generator in parallel, a 25 VA current transformer (CT) is required. The CT is connected into the generator line and should deliver from 3 to 5 amperes secondary current at rated load to the Regulator terminals, TB2-1 and TB2-2.

(2) The phase relationship of the CT signal to the Regulator sensing input must be correct or the system will not parallel properly. For three-phase sensing, the CT must be installed in the line supplying the sensing voltage to terminal TB2-E2 (phase B). For single-phase sensing, the CT must be installed in the line that does not supply sensing to the Regulator (phase B).

Reactive Droop Compensation

(1) For reactive droop compensation, connect the Regulator to the CT as shown by Figures 2-3 and 2-4.

(2) A unit/parallel switch shorts the parallel CT secondary to prevent any droop signal from being injected into the regulating system during single-unit operation. The switch may not be required on parallel droop compensation applications where a voltage drop is not objectionable.

Reactive Differential (Cross-Current) Compensation

(1) On parallel reactive differential (cross-current) compensation applications, a contact should be used to short out the paralleling CT secondary when that generator is not paralleled to the bus. If the switch is not used, a voltage droop will be introduced into the system. This is due to the unloaded generator parallel CT not supplying a compensated signal, but allowing a voltage drop to occur across it. Lack of this shorting contact will also cause the voltage of the oncoming generator to fluctuate prior to paralleling. Ideally, this contact is an auxiliary of the circuit breaker contractor (52 device) that opens when the breaker is closed.

(2) For reactive differential (cross-current) compensation, refer to Figure 2-6 when only SSR's are being used. If SSR's and non-SSR regulators are used, refer to Figure 2-7. First connect each CT to its respective Regulator. Then connect the end of the first CT to the start of the second CT, the end of the second CT to the start of the third, etc. Continue until all of the CT's are connected in series. The final step will be to connect the end of the last CT to the start of the first CT.

(3) Reactive differential compensation should not be used with generators in parallel with the utility or any infinite bus. If the system will be paralleled with a source not in the loop, a switching circuit must be used to convert the system to a reactive droop compensation system by opening the loop at any point.

Overexcitation Circuit Breaker

An optional Overexcitation Circuit Breaker is available which will perform three functions as follows (refer to Figures 2-8 through 2-10):

(1) The Circuit Breaker can be operated manually to perform as an On/Off switch to apply or remove ac power and replaces the input power fuses connected to terminals TB2-3 and TB2-4.

(2) The Circuit Breaker will respond to a special signal from the overexcitation circuit in the Regulator. This signal will open the Circuit Breaker if the field voltage remains after the internal overexcitation circuit has tripped and thus provide a back-up to the Regulator circuitry. This condition could arise as a result of component failure within the regulator.

(3) In 50/60 Hz applications, the Circuit Breaker provides overcurrent protection. For higher frequency power sources such as a PMG, fuses must be used to provide proper overcurrent protection.

Katolight Service - Master Repair Manual - Page 1599

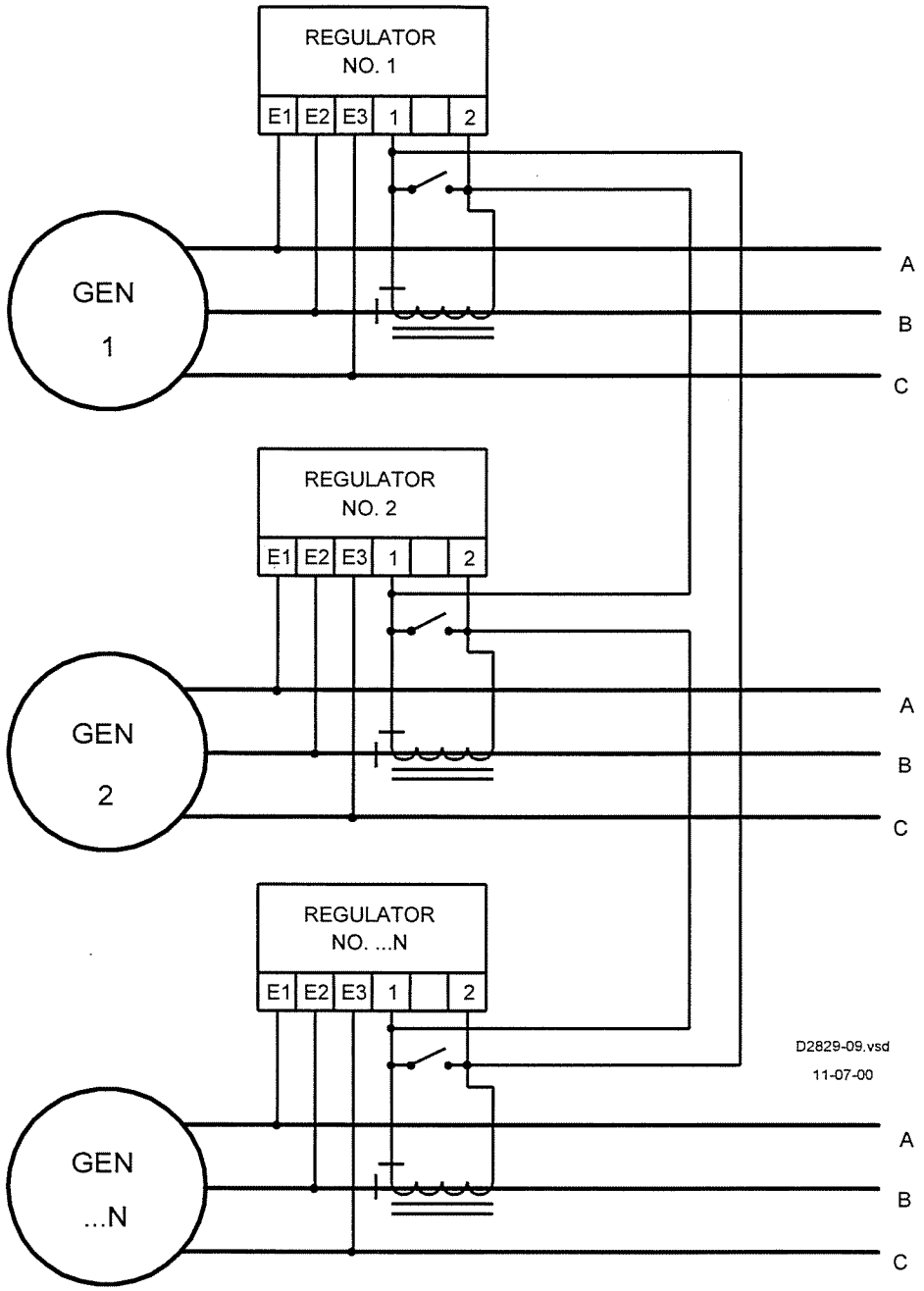

Figure 2-6. Reactive Differential (Cross Current) Compensation CT's Interconnection

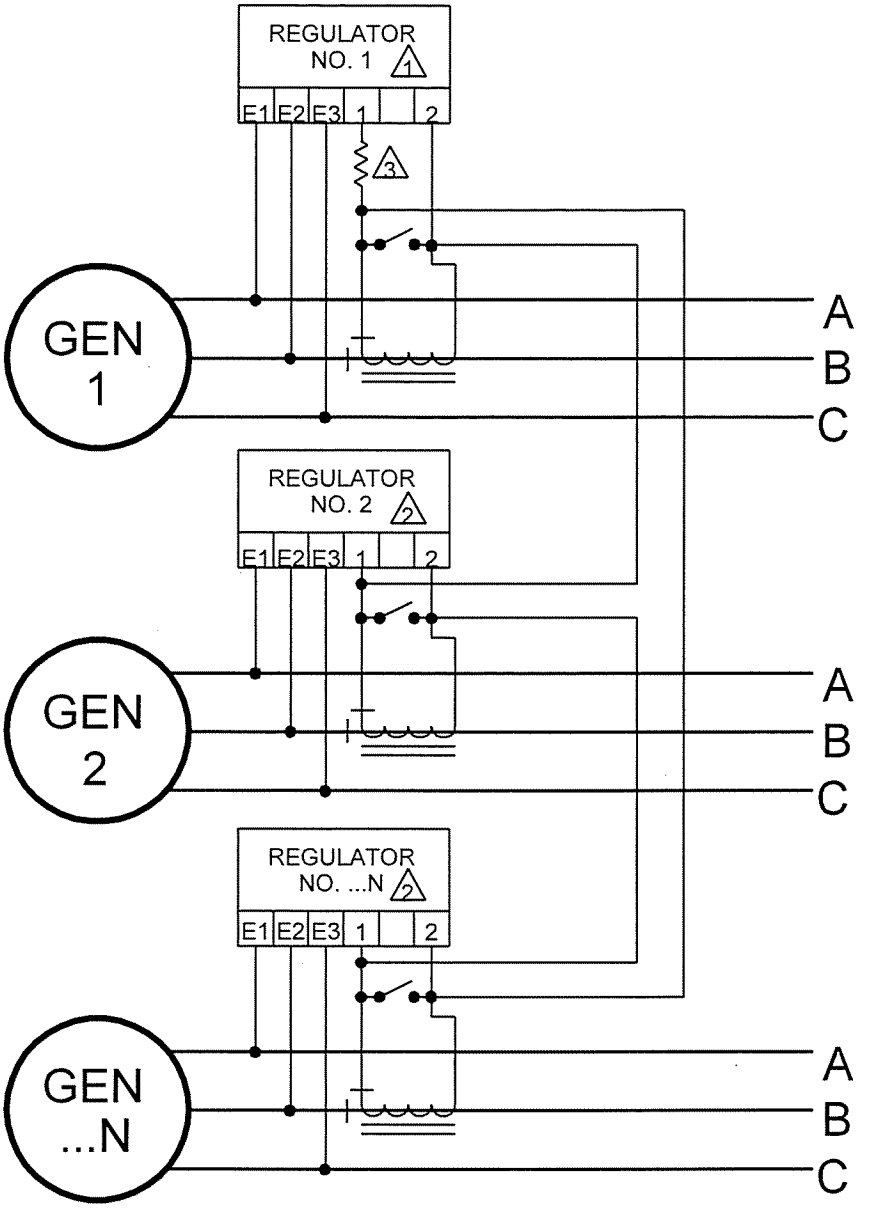

Figure 2-7. Reactive Differential (Cross Current) Compensation CT's Interconnection with Non-SSR Regulators

Katolight Service - Master Repair Manual - Page 1601

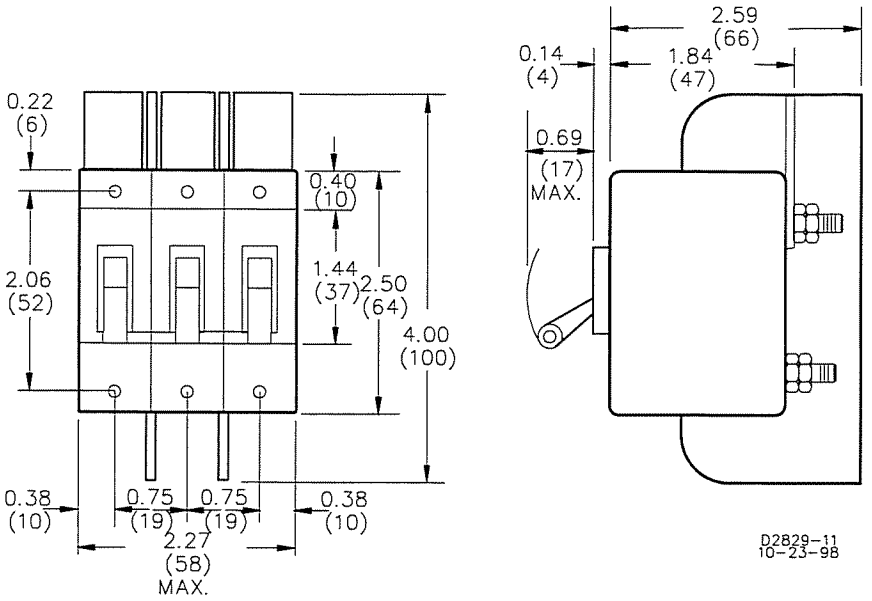

Figure 2-8. Overexcitation Circuit Breaker Outline Drawing

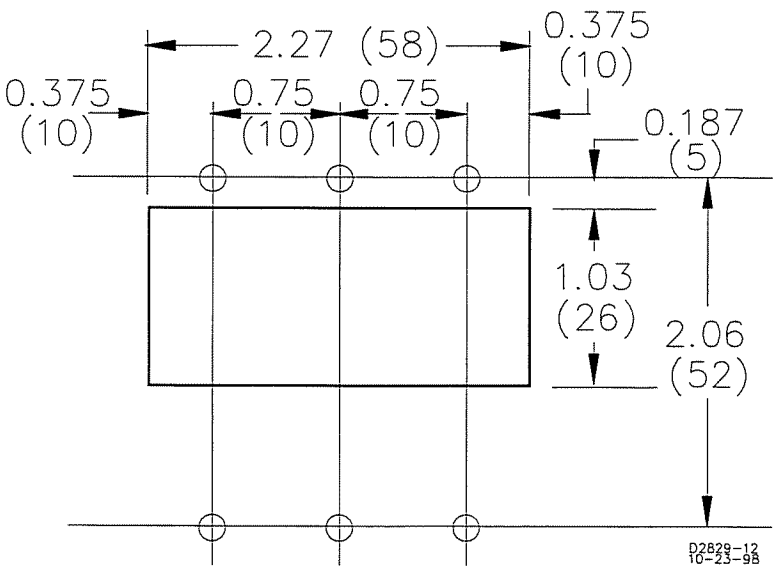

Figure 2-9. Overexcitation Circuit Breaker Panel Cutout Drawing

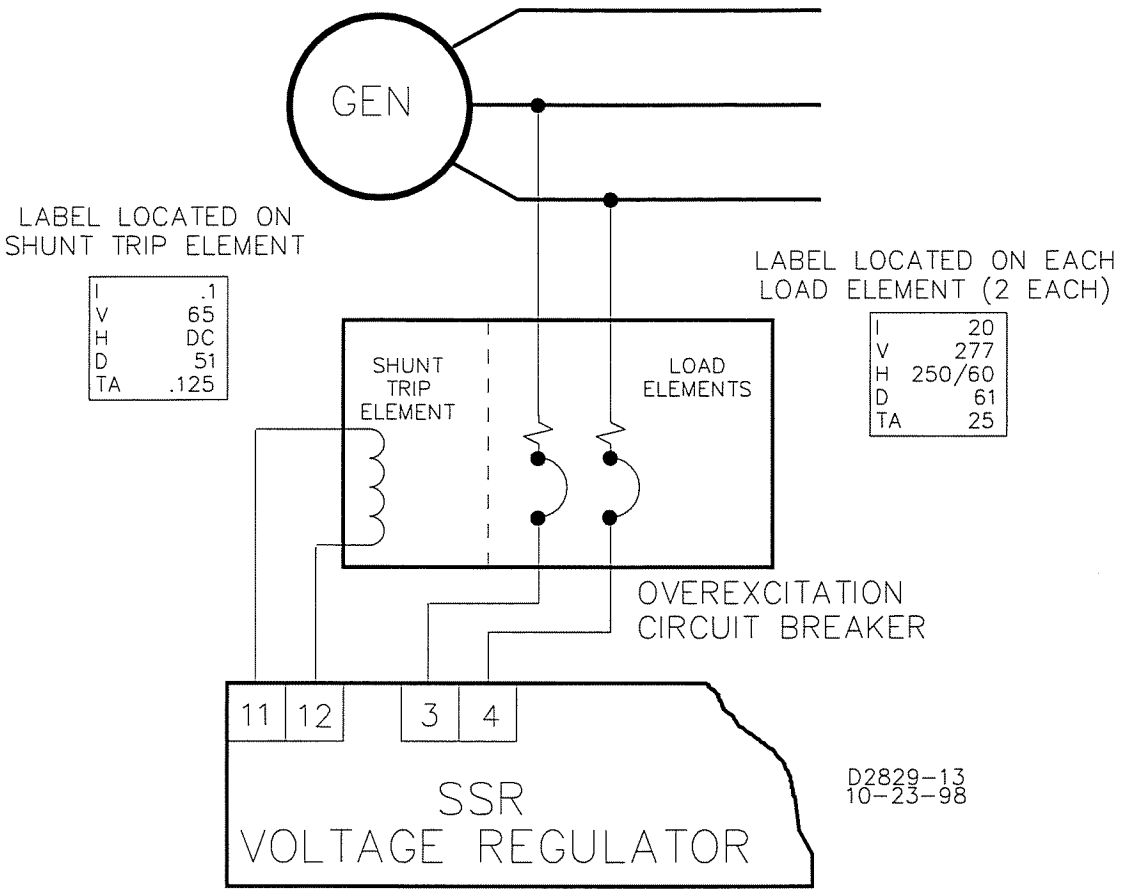

Figure 2-10. Overexcitation Circuit Breaker Interconnection Drawing

Katolight Service - Master Repair Manual - Page 1603

SECTION 3 • OPERATION

FRONT PANEL CONTROLS AND INDICATORS

VOLT Adjustment

This adjustment is used to control the generator output voltage. When adjusted fully counter-clockwise (CCW), minimum generator voltage is obtained. Maximum generator voltage is obtained with full clockwise (CW) rotation. This adjustment also allows for centering the external (remote) voltage adjust rheostat if it is used.

STAB Adjustment

This adjustment is used to provide stable Regulator operation. Normally, this adjustment is factory set in the (CW) position. While this setting assures good stability, it does tend to slow the generator response time. If rotated CCW, the generator response time will decrease. However, if rotated too far CCW, the generator voltage may oscillate (hunt). It should then be rotated CW to a point well above the point where oscillation occurred. The system voltage instability is most likely to occur at no-load.

FREQ Adjustment

This adjustment is used to set the underfrequency roll-off point. By rotating the control CW, the roll-off point is increased. The roll-off point is adjustable between 48 and 63 Hz. For Volts-per-Hertz operation, rotate the **FREQ** control to maximum CW.

UNDER FREQ Indicator

This indicator (an LED) will illuminate any time the generator frequency is below the roll-off point set by the **FREQ** adjustment. If operating in Volts-per-Hertz mode, this indicator will be illuminated at all times when the generator system is operating.

DROOP ADJUST Control

This adjustment sets the level of the reactive droop compensation.

OPTIONAL VOLTAGE SHUTDOWN SWITCH

CAUTION

When a voltage shutdown switch is used, it must always be installed in the input power circuit (Terminals TB2-3 and TB2-4). A high flyback could develop and damage the Regulator and/or Exciter field if this switch were installed in the dc field circuit (Terminals TB2-F+ and TB2-F-).

CAUTION

To avoid high voltage arcing, the field circuit must never be opened during operation. Also, a shutdown circuit using a field discharge resistor in the exciter field circuit must not be used. Safe shutdown can be accomplished only by interrupting the Regulator input ac power.

The Voltage Regulator and generator system may be equipped with a switch in the input power circuit to allow removal of the excitation from the field in an emergency or when the prime mover must be operated at an extremely reduced speed. If this switch is not used, it is recommended that a switch be temporarily be installed for the initial start-up.

INITIAL OPERATION

Preliminary Instructions

Verify that all wiring is properly and securely connected. Refer to Section 2.

System Check-out

Perform the following steps to ensure the proper operation of the Regulator during initial operation:

(1) Start the prime mover and bring up to rated speed. If a voltage shutdown switch is used, close the switch to apply excitation. When this switch is not used, generator voltage will build up automatically.

(2) Verify generator voltage. Note that any of the following conditions may occur:

Overvoltage

If this condition occurs, open the shutdown switch and stop the prime mover. Determine the cause of the overvoltage. If necessary, refer to the troubleshooting chart in Section 4.

No Voltage Build-up

If this condition occurs, field flashing may be required. Refer to the following sub-section *Flashing.*

Undervoltage

If this condition occurs, adjust the **VOLT** control. If not corrected, refer to the troubleshooting chart in Section 4.

Voltage Builds Up and Then Collapses

If this condition occurs, stop the prime mover and determine the cause by referring to the troubleshooting chart in Section 4.

Oscillating Voltage

If this condition occurs, rotate the front panel **STAB** adjustment to correct. If the voltage continues to oscillate and the **STAB** control has no effect, refer to the troubleshooting chart in Section 4.

(3) Adjust the front panel **VOLT** control for nominal generator output.

(4) Apply load to the generator.

(5) Verify that the voltage regulation is within ±0.25%. If not, refer to the troubleshooting chart in Section 4.

(6) Alternately remove and apply the load to determine if the generator voltage is stable.

(7) If an underfrequency setting other than the factory pre-set is desired, proceed as follows:

  (a) Lower the generator frequency (speed) to the desired underfrequency value.

  (b) Rotate the front panel **FREQ** adjustment until the front panel **UNDER FREQ** indicator (LED) is illuminated.

  (c) Return the generator frequency (speed) to its nominal value.

Katolight Service - Master Repair Manual - Page 1605

FIELD FLASHING

CAUTION

Do not attempt to flash the machine when it is rotating.

When the Voltage Regulator is operated with the generator for the first time, the polarity of residual magnetism may not be correct or of sufficient magnitude. If the generator does not build up after start-up, check for 6 volts or more residual at the Regulator terminals TB2-3 and TB2-4. If the voltage is below 6 volts, shut down the prime mover and proceed as follows:

a. With the prime mover at rest, apply a dc source (non-grounded) of not more than 12 Vdc, to terminals "F+" (positive) and "F-" (negative) while observing polarity, in series with a limiting resistor of 25 - 30 ohms.

b. Allow approximately 3 seconds before removing the dc source.

c. With the Voltage Regulator power input disconnected (terminals TB2-3 and TB2-4), start the prime mover and measure the voltage at the generator terminals. If the generator output is less than 6 volts, repeat steps a. and b. If the voltage is greater than 6 volts, voltage build-up should occur. Stop the prime mover and reconnect the Regulator input power.

PARALLEL OPERATION

The following paragraphs describe the procedures to be followed when operating two or more generators in parallel. In order to ensure proper operation, the following requirements must be met:

(1) The voltage regulating systems must cause the generators to share the total kVAR load,

and

(2) The speed governing system must make the generators share the total kW load.

Preliminary Instructions

It is essential that the paralleling signal at terminals TB2-1 and TB2-2 of the regulator have the proper phase relationship with that of the sensing voltages at terminals TB2-E1, TB2-E2, and TB2-E3. Verify that these connections are made as shown by Figure 2-2. If reactive differential (cross-current) compensation is desired, the paralleling CT's must be connected as described in Section 2. A CT must be selected which will furnish 3 to 5 amperes at the rated generator load current.

Preliminary Operation

Before attempting to parallel two or more generators, it is recommended that the individual generators be tested to verify that the paralleling features function properly. Test as follows:

(1) Place each generator in operation in accordance with initial operation instructions.

(2) Verify that the paralleling CT secondary is not shorted. (Unit/Parallel switch in Parallel position.)

(3) Verify that the front panel **DROOP ADJUST** control is adjusted for maximum droop.

(4) Apply 25% to 100% unity power factor load to the generator under test. The generator voltage should not change more than 1%.

(5) Apply 25% to 100% 0.8 pf inductive load to the generator under test. The generator voltage should droop from 2% to 6% with the reactive load. If the voltage rises instead of drooping, reverse the CT sensing leads.

(6) Verify that the voltage and speed do not drift or jump erratically.

Conditions Necessary for Paralleling

In order to prevent damage to the generator and/or prime mover, paralleling should be attempted only when the generator speeds (frequencies) are equal and at the instant when the generator voltages are equal. That is, they have the same phase sequence of voltage and the voltages are in phase.

Paralleling Operation

The following instructions describe the procedures for paralleling two or more generators. If using an auto-synchronizer (such as the Basler BE1-25A or BE3-25A) than all adjustments and the breaker closure are automatically performed by the auto-synchronizer.

(1) Start generator No. 1 and verify that the bus is dead.

(2) Close the breaker connecting generator No. 1 to the bus.

(3) Adjust the generator voltage and frequency to nominal.

(4) Apply the load. (If possible, the load should be at least 10% or more of the generator kW rating.)

(5) Start generator No. 2 and adjust the output to nominal.

(6) Adjust generator No. 2's speed slightly higher than that of No. 1's. Speeds must be within 0.1 Hz (10 second rotation of synchroscope through 360°).

(7) At zero phase angle between the generator and bus, close the breaker for the No. 2 generator and immediately read the ammeter for No. 2. The reading should be well within the generator rating and the operation stable. If not, shut down the system and troubleshoot.

(8) Adjust the speed of No. 2 to the point where each set is carrying the desired share of the load.

(9) Adjust the voltage of No. 2 until the ammeter reading (of both generators) are near minimum.

(10) If kVAR meters are available, adjust the front panel DROOP ADJUST on Regulator No. 2 for an equal kVAR reading.

(11) If the generators are equipped with power factor meters instead of kW meters, alternately adjust the speed and droop of No. 2 until the ammeter readings are proportional and the power factor readings are equal.

NOTE
For best results, final adjustments should be made with a full load on the bus.

(12) With a full load applied, readjust the speed and voltage on No. 2 until the desired load division is obtained.

SECTION 4 • MAINTENANCE

PREVENTIVE MAINTENANCE

The only preventive maintenance required on the SSR Series Voltage Regulators is to periodically check that the connections between the Regulator and system are clean and tight and that the Regulator cooling fins and housing are free from accumulations of dirt and dust.

CORRECTIVE MAINTENANCE

The SSR Series Voltage Regulators are designed for ease of repair by the replacement of major parts, such as the transformers, power module, or electronics module. Refer to Section 5 for part numbers.

WARRANTY AND REPAIR SERVICE

The Basler SSR Series Voltage Regulators are warranted against defective material and workmanship for 18 months from the date of shipment from our factory. Units submitted for warranty repair should be returned to the factory in Highland, Illinois, freight prepaid, with a complete description of the installation and the reported problem. Pre-arrangement with either the nearest Basler Sales Office or with the factory will assure the fastest possible turn around time.

TROUBLESHOOTING

The more common generator system malfunctions and the appropriate repair procedures are listed in Table 4-1.

OPERATIONAL TESTING

To test the SSR Voltage Regulator, refer to Figure 4-1 and proceed as follows:

a. Adjust the front panel **STAB** control fully counter-clockwise (CCW).

b. Connect the circuit as shown in Figure 4-1. The light bulb should be a 120 V type of not more than 300 W).

c. Adjust the Voltage Adjust Rheostat for maximum resistance.

d. Connect the regulator to a power source. Note that the light bulbs may flash momentarily.

e. Slowly rotate the Voltage Adjust Rheostat toward minimum resistance. The light should reach full brilliance before minimum resistance is attained. (If the light does not illuminate, adjust the front panel **VOLT** control.)

f. At the regulating point, a small change in the Voltage Adjust Rheostat should turn the light on or off.

> **NOTE**
>
> If the light bulb(s) do not illuminate, the regulator is defective.

g. This test may not reveal a stability problem. However, rotating the front panel **STAB** adjustment should affect the bulb's turn on/turn off time.

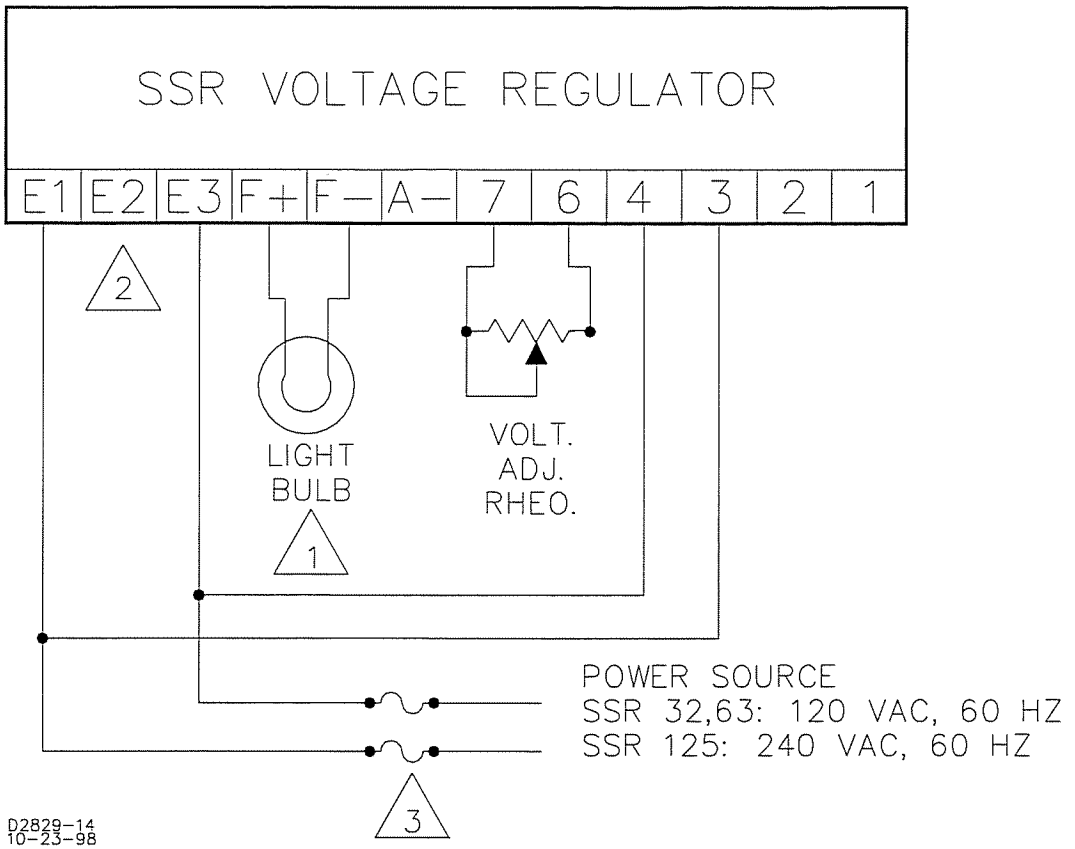

NOTES:

1. TWO IDENTICAL BULBS CONNECTED IN SERIES ARE REQUIRED FOR THE SSR 63 AND SSR 125.
2. FOR 3-PHASE SENSING, 3-PHASE VOLTAGE AND FUSING ARE REQUIRED
3. 5A, 120 V OR 5 A, 240 V GLASS ENCLOSED FUSES ARE REQUIRED

Figure 4-1. Operational Test

Table 4-1. Troubleshooting Table

SYMPTOM
CORRECTIVE ACTION

1. VOLTAGE DOES NOT BUILD UP TO RATED VALUE.

Step 1. Check for low residual voltage (less than 6 volts).

If low residual voltage exists, flash the field in accordance with Section 3.

If residual voltage is normal, proceed to step 2.

Step 2. Check Shutdown Switch and fuses.

Check that Shutdown Switch is closed.

Check that fuses are intact.

If Shutdown Switch is closed and fuses are intact, proceed to step 3.

Step 3. Check that prime mover is up to speed.

If prime mover is operating at rated speed, proceed to step 4.

Step 4. Verify that generator output is not shorted or heavily loaded.

If output is not shorted, proceed to step 5.

Step 5. Verify that the wiring between the external Voltage Adjust Rheostat and terminals TB1-6 and TB1-7 is not defective.

If wiring is defective, repair or replace wiring.

If wiring is not defective, proceed to step 6.

Step 6. Replace the external Voltage Adjust Rheostat and wiring with a jumper across terminals TB1-6 and TB1-7. Check for proper operation by adjusting the front panel VOLTS control.

If voltage build-up occurs, replace the external rheostat.

If voltage build-up does not occur, replace the regulator.

2. VOLTAGE BUILDS UP AND THEN DECAYS.

Check for open circuit from external Voltage Adjust Rheostat (if used), or lack of jumper across TB1-6 and TB1-7 (if an external Voltage Adjust Rheostat is not used).

If connections to TB1-6 and TB1-7 are not defective, replace the electronics module.

SYMPTOM
CORRECTIVE ACTION

3. VOLTAGE HIGH AND UNCONTROLLABLE WITH VOLTAGE ADJUST RHEOSTAT.

CAUTION

The generator and exciter may be damaged by operation this condition for more than 5 to 10 seconds. Use the shutdown switch to minimize operating time.

Step 1. Adjust the front panel **VOLT** control fully CCW.

If this reduces the voltage below nominal value, adjust for nominal voltage and discontinue troubleshooting. If not, proceed to step 2.

Step 2. Verify that sensing voltage is available at terminals TB2-E1, TB2-E2, and TB2-E3 and that the proper taps are used.

If sensing voltage is not available, correct wiring.

If sensing voltage is proper, proceed to step 3.

Step 3. Replace the internal sensing transformers (BE 21755-001).

Step 4. Replace the electronics module.

4. VOLTAGE HIGH AND CONTROLLABLE WITH VOLTAGE ADJUST RHEOSTAT.

Step 1. Adjust the front panel **VOLT** control fully CCW.

If this action reduces the voltage below nominal, adjust for nominal voltage and discontinue troubleshooting. If not, proceed to step 2.

Step 2. Verify that the sensing voltage is available at terminals TB2-E1, TB2-E2, and TB2-E3 and that the proper taps are used.

If the sensing voltage is not available, repair wiring.

If the sensing voltage is proper, proceed to step 3.

Step 3. If using single-phase sensing, verify that the jumper across terminals TB1-21 and TB1-22 has been installed.

If jumper is not present, install jumper.

If jumper has been installed, proceed to step 4.

Step 4. Check for defective voltmeter.

If voltmeter is defective, replace voltmeter.

If voltmeter is not defective, proceed to step 5.

SYMPTOM
CORRECTIVE ACTION

4. VOLTAGE HIGH AND CONTROLLABLE WITH VOLTAGE ADJUST RHEOSTAT - Continued.

Step 5. Replace the internal sensing transformers (BE 21755-001).

Step 6. Replace the electronics module.

5. VOLTAGE LOW AND CONTROLLABLE WITH VOLTAGE ADJUST RHEOSTAT.

Step 1. Verify that prime mover is up to rated speed.

If prime mover is not operating at rated speed, increase speed.

If prime mover is operating at rated speed, proceed to step 2.

Step 2. Verify that the sensing voltage is available at terminals TB2-E1, TB2-E2, and TB2-E3 and that the proper taps are used.

If the sensing voltage is not available, repair wiring.

If the sensing voltage is proper, proceed to step 3.

Step 3. If using three-phase sensing, verify that the jumper across terminals TB1-21 and TB1-22 has been removed.

If jumper is present and three-phase sensing is used, remove jumper.

If jumper has been removed or three-phase sensing is not used, proceed to step 4.

Step 4. Check for defective voltmeter.

If voltmeter is defective, replace voltmeter.

If voltmeter is not defective, proceed to step 5.

Step 5. Check the front panel **UNDER FREQ** indicator.

If the indicator is lit, and frequency (speed) is correct, adjust the front panel **FREQ** control CCW until the indicator is out. Then adjust for normal voltage.

If the above fails, proceed to step 6.

Step 6. Replace the electronics module.

SYMPTOM
CORRECTIVE ACTION

6. POOR REGULATION

Step 1. Verify that the field voltage/current requirements at full load are not in excess of the maximum Regulator output capability.

If Regulator limits are being exceeded (per Table 1-1), consult with factory for suitable model.

If regulator limits are not exceeded, proceed to step 2.

Step 2. Verify that the input power to terminals TB2-3 and TB2-4 is correct (see Table 1-1).

If input power is incorrect, connect proper power input.

If input power is correct, proceed to step 3.

Step 3. Verify that generator output voltmeter is connected at the same location as sensing inputs.

If voltmeter location is different, reconnect.

If voltmeter location is the same, proceed to step 4.

Step 4. Check for waveform distortion due to harmonic content in generator output voltage. (Regulator senses average voltage, meter may be indicating RMS value.)

If waveform distortion is present, use an average sensing (rectifier type) voltmeter to verify regulation accuracy.

If waveform distortion is not present, proceed to step 5.

Step 5. Verify that Unit/Parallel switch is in Unit position except during parallel operation.

If Unit/Parallel is in incorrect position, place switch into proper position.

If Unit/Parallel switch is in proper position, proceed to step 6.

Step 6. Verify that load is balanced (three-phase sensing only).

If load is unbalanced, measure three phase-to-phase voltages at no-load and full-load. Calculate the average of these voltages to verify regulation accuracy.

If load is balanced, proceed to step 7.

Step 7. Verify that Regulator frequency compensation circuit is not causing load change by observing the front panel **UNDER FREQ** indicator at no-load and full-load. If LED lights, adjust the front panel **FREQ** control CW or increase prime mover speed until the LED does not light.

Step 8. Replace the electronics module.

Katolight Service - Master Repair Manual - Page 1613

SYMPTOM
CORRECTIVE ACTION

7. POOR STABILITY

Step 1. Check the adjustment of the front panel **STAB** control (Section 3).

If the front panel **STAB** control is out of adjustment, readjust.

If the front panel **STAB** control is in adjustment, proceed to step 2.

Step 2. Check for unstable frequency.

If the frequency is unstable, consult governor manual.

If the frequency is stable, proceed to step 3.

Step 3. Replace the electronics module.

8. VOLTAGE RECOVERY SLOW WITH LOAD CHANGE.

Step 1. Check the adjustment of the front panel **STAB** control (Section 3).

If the front panel **STAB** control is out of adjustment, readjust.

If the front panel **STAB** control is in adjustment, proceed to step 2.

Step 2. Verify that the field voltage/current requirements at full load are not in excess of the maximum Regulator output capability.

If Regulator limits are being exceeded (per Table 1-1), consult with factory for suitable model.

If regulator limits are not exceeded, proceed to step 3.

Step 3. Replace the electronics module.

9. PARALLEL GENERATORS DO NOT DIVIDE REAL kW LOAD EQUALLY.

Consult governor manual.

SYMPTOM
CORRECTIVE ACTION

10. PARALLEL GENERATORS DO NOT DIVIDE REACTIVE LOAD EQUALLY.

Step 1. Verify that sensing CT is rated to produce 3 to 5 amperes at rated load.

If CT is of improper size, replace CT.

If CT is of proper size, proceed to step 2.

Step 2. Verify that terminals TB2-1 and TB2-2 are not shorted.

If terminals are shorted, open terminals.

If terminals are not shorted, proceed to step 3.

Step 3. Refer to Section 3 to verify proper connections and to test parallel compensation circuit.

SECTION 5 • REPLACEMENT PARTS

GENERAL

The following list (Table 5-1) describes the components of the SSR Series of Voltage Regulators that have maintenance significance. When ordering parts from Basler Electric Company, be sure to specify the Regulator model and part number and the Basler component part number, quantity, and description. Unless otherwise specified, all components are interchangeable.

Table 5-2 provides a Model Number to Part Number Cross-Reference list of the SSR regulators.

Table 5-1. Replacement Parts

Basler Part Number	Qty	Description
9 1859 01 100	1	Printed Circuit Board Assembly (Model SSR 32-12 Only)
9 1859 01 101	1	Printed Circuit Board Assembly (Model SSR 63-12 Only)
9 1859 01 102	1	Printed Circuit Board Assembly (Model SSR 125-12 Only)
19781	1	Resistor, Variable, 15 ohms, 12.5 watts
19364	2	Power Module (SSR 63-12 and SSR 125-12 Only)
31585	1	SCR Module (SSR 32-12 Only)
19764	1	Diode Module (SSR 32-12 Only)
BE22352-001	1	Transformer
BE21600-001	1	Transformer
BE21755-001	1	Transformer
BE21756-001	1	Transformer
02682	1	Potentiometer, 5 kohms, 2 watts
9 2615 00 100	1	Spike Suppression Module (Models SSR32-12 & SSR63-12 Only)
9 2615 00 101	1	Spike Suppression Module (Model SSR125-12 Only)

Table 5-2. Part Number to Model Number Cross-Reference List

Model Number	Part Number
SSR 32-12	9 1859 00 100
SSR 63-12	9 1859 00 101
SSR 125-12	9 1859 00 102

SECTION 6 • MANUAL CHANGE INFORMATION

CHANGES

Substantive changes in this manual to date are summarized in Table 6-1.

Table 6-1. Summary of Changes

Revision	Summary of Changes	ECO No.	Date
N	Corrected Voltage Build-Up in Specifications from "From 6 volts residual or less" to "From 6 volts residual or more." Changed the format of the manual. Added Section 6 "Manual Change Information."	915	10-98
O	Added polarity markings to CTs in Figures 2-6 and 2-7. In Table 5-1, corrected the Description for part numbers 19781 and 02682	11319	11-2000
P	Replaced obsolete part number for SCR Power Module in Table 5-1, *Replacement Parts*.	18263	08-02

Basler Electric
ROUTE 143, BOX 269
HIGHLAND, IL 62249 USA
http://www.basler.com, info@basler.com
PHONE 618-654-2341
FAX 618-654-2351

NEWAGE

LIMITED

A SUBSIDIARY OF NEWAGE INTERNATIONAL LIMITED

AC GENERATOR WARRANTY

GENERAL

Newage Limited warrants any product of its manufacture to be free from defects in materials and workmanship for a period of time dependent upon service and application.

Stamford and Markon Generators are built in accordance with specific standards as indicated in our sales literature. Conformance with these standards on Newage's part requires that the products be used as intended and certain precautions be taken by the user and assembler.

AC Generators must be properly protected, ventilated, and mounted to ensure trouble-free running. The user should take precautions to ensure that the ingress of moisture, recirculating exhaust, dust, insects, rodents and debris are avoided. Coastal and marine installations require protection against salt-laden spray. Anti-condensation heaters must be installed where temperature differentials and relative humidity promote condensation. Electrical system protection must be properly selected, rated, installed and functioning.

Newage's warranty period does not extend beyond that offered by the original purchaser, and is voided by any resale to other than the first owner/user.

WARRANTY PERIODS

A. Emergency or Standby Duty

Standby generators must be permanently installed, properly enclosed and ventilated, and used as back up to the normal power source. Mobile or rental sets do not fit this category.

The warranty period is 24 months from date of installation by the first owner/user, or 30 months after date of shipment by Newage, whichever is the shorter, or 1000 hours of operation, limited to a maximum of 500 hours per year, for 2 years, whichever is the shorter.

B. Continuous or Prime Duty

Continuous or prime power service describes operation in a permanent or mobile application where no other source of power is generally available. Rental sets, and specific products for irrigation and refrigeration meet this criteria, irrespective of running hours. Cogeneration and peak shaving installations are considered prime power.

The warranty period is 12 months from date of start-up by the first owner/user, or 18 months after date of shipment by Newage, whichever is the shorter. Hours of operation are unrestricted, provided service is conducted as indicated in our Operation and Maintenance Manuals, and maintenance is performed per the manual.

CORRECTIVE ACTION

Warranty work can only be approved and initiated by Newage Limited after receipt of the failure details by phone or fax. This will permit Newage Limited to determine the best course of action. Newage will not participate in any claim where work has proceeded without prior knowledge being provided.

Newage Limited will make good by repair, or, at its option, by replacement, any fault which, under proper use, appears in the goods within the warranty period and is found on examination by Newage or its appointed representative to be solely due to defective materials or workmanship. The defective part or parts must be promptly returned, prepaid with all identification numbers and marks intact to a Newage facility, representative, or, if appropriate, to the dealer who supplied the goods. Where such a course of action is impossible or inappropriate, Newage Limited will accept a set of photographs from its appointed representative permitting a visual analysis of the failure prior to any corrective action.

The repaired or replacement part will be delivered prepaid to the first destination within the 48 contiguous states and Canadian provinces, free of charge. This warranty does not cover the removing/installing and defective/replacement equipment, nor any costs associated with equipment as manufactured by others that may be impacted by the defect.

CONSEQUENTIAL DAMAGE AND LIABILITY

Newage Limited disclaims any liability for consequential damages (personal and property) from the buyer and its customers resulting from a defect within the warranty period. Newage's maximum liability will not exceed the purchase price of the Newage product purchased by the first buyer and shall be limited to repair, replacement, or refund.

Newage Limited liability under this warranty shall be in lieu of any warranty on condition implied by law as to the quality or fitness for any particular purpose of the goods, and save as expressly provided in the warranty. Newage Limited shall not be under any liability, whether in contract, tort or otherwise, with respect to defects in goods delivered, or for any injury, damage or loss resulting from such defects, or from any work done in connection therewith.

JUDGEMENT

Newage Limited judgment shall, in all cases be final and conclusive, and claimant shall accept the Newage decision on all questions relating to defects and the exchange, repair, or replacement of a part or parts.

STAMFORD

AC GENERATORS FROM NEWAGE INTERNATIONAL

MARKON

NEWAGE LIMITED
4700 MAIN ST. NE • FRIDLEY MN • 55421
TOLL FREE [illegible]

Katolight Service - Master Repair Manual - Page 1619

NEWAGE
INTERNATIONAL

IMPORTANT NOTICE

HAZARD - WARNING LABELS

The generator is supplied as a component part for installation in a generating set and is in many cases subjected to a final paint spraying operation. It is therefore desirable to fit labels on the exterior of the machine after the finishing paint is applied.

To this end a card of warning labels with instructions showing their desired position is enclosed with this manual.

It is the responsibility of the generating set manufacturer to ensure that the correct labels are fitted and are clearly visible.

September 1991

NEWAGE STAMFORD

NEWAGE LTD.

A SUBSIDIARY OF NEWAGE INTERNATIONAL LTD.

P.O. Box 346
Jefferson Building
106 chesley Drive, 2 Floor
Media, PA 19063

Technical Note

ITEM: MX & SX AVR's

SUB: U.F.R.O Setting

The setting on the new AVR's may in certain instances, require tuning.

The symptoms are as follows:

1) As load increases, the engine speed falls to the nominal frequency, ie, 60 or 50Hz, or slightly lower, 50 or 49Hz.

2) When this happens, the U.F.R.O. circuit cuts in, and the voltage drops very quickly, shedding load and allowing the engine to recover speed slightly.

3) As it recovers, the U.F.R.O. circuit switches off, and the volts rise to normal, causing the engine load to increase, dropping the speed again.

4) At this point, the U.F.R.O. cuts in again, repeating the whole procedure, setting up a volts/ Hz fluctuation with a 5 to 10% voltage swing.

To resolve the problem:

1) Check to see if the L.E.D. light on the AVR is switching on and off.

2) For 60Hz readjust the U.F.R.O. setting to come on at 57Hz.

3) Then turn the "Dip" control fully counter clockwise to ensure this is fully out of the circuit.

RWG:dmw

NUPART DIVISION -NEWAGE INTERNATIONAL LTD

IMPORTANT : PLEASE READ CAREFULLY BEFORE CONNECTING THIS AUTOMATIC VOLTAGE REGULATOR TO THE GENERATOR. APPLICABLE TO MX341 AVR E000-23410 AND SX440 AVR E000-24030

MODIFICATION TO TERMINALS

THE AVR ENCLOSED HAS A MODIFICATION TO THE CONNECTION TERMINALS AS SHOWN OPPOSITE. THERE IS NOW A NEW (ADDITIONAL) TERMINAL MARKED '2' WHICH IS INTERNALLY CONNECTED TO THE ORIGINAL TERMINAL '2'.

- IF YOUR GENERATOR HAS AN AVR LEAD MARKED '1' THEN REMOVE THE LINK (1-2) FROM THE AVR AND RECONNECT ALL LEADS TO THEIR MATCHING AVR TERMINALS.
- IF YOUR GENERATOR DOES NOT HAVE A LEAD '1' THEN LEAVE THE AVR LINK (1-2) IN PLACE AND RECONNECT ALL LEADS TO THEIR MATCHING AVR TERMINALS.

CAUTION

TAKE CARE TO ENSURE ALL LEADS ARE CORRECTLY CONNECTED TO THE IDENTICAL TERMINAL MARKERS ON THE AVR.

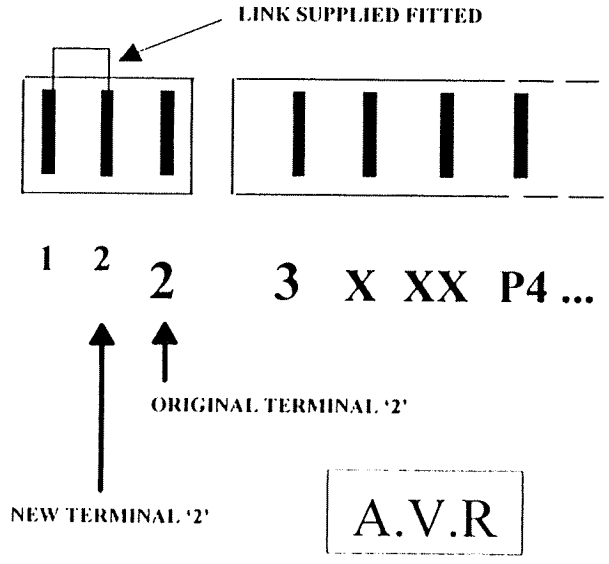

NUP-091/ 2
12/2/99

Katolight Service - Master Repair Manual - Page 1625

DA7-A100 | ISSUE H

FIRST W.O.

IF IN DOUBT-ASK

MAIN STATOR (12 ENDS)

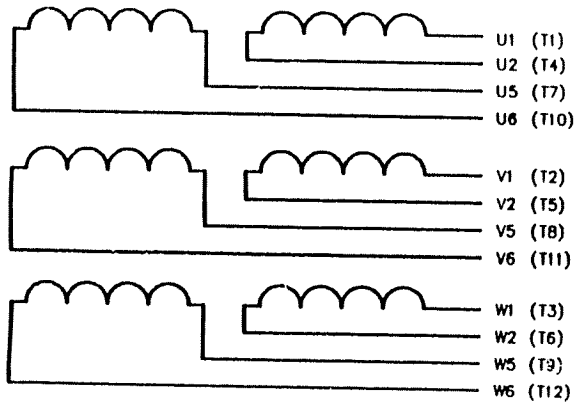

(T1) = NEMA EQUIVALENT

CONNECT TO AVR



DEPENDING ON AVR TYPE MULTIPLE LEADS (6,7,8) WILL BE REQUIRED.
LEAD 6 MAY NOT BE REQUIRED
FULL DETAILS ARE SHOWN ON THE BASE DIAGRAM.

MAIN TERMINAL CONNECTIONS

SERIES STAR 3PH 4W
OUTPUT TERMINALS U.V.W.N.

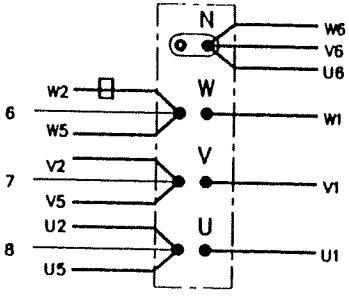

☐ DROOP C/T POSITION(when fitted)
CONNECTIONS ARE SHOWN ON BASE DIAGRAM

SERIES DELTA 3PH 4W
OUTPUT TERMINALS U.V.W.N.

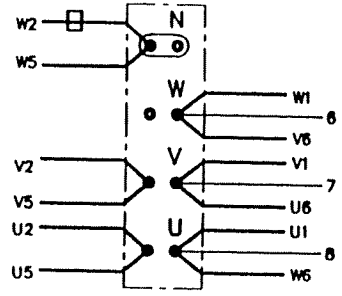

☐ DROOP C/T POSITION(when fitted)
CONNECTIONS ARE SHOWN ON BASE DIAGRAM

PARALLEL STAR 3PH 4W
OUTPUT TERMINALS U.V.W.N.

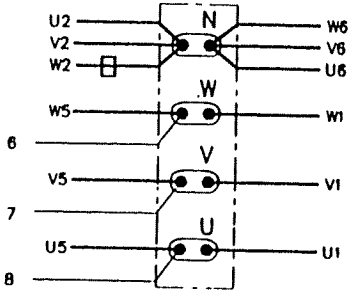

☐ DROOP C/T POSITION(when fitted)
CONNECTIONS ARE SHOWN ON BASE DIAGRAM

PARALLEL ZIG ZAG 1PH 3W
OUTPUT TERMINALS HIGH VOLTS U.W.
LOW VOLTS U.N. AND W.N.

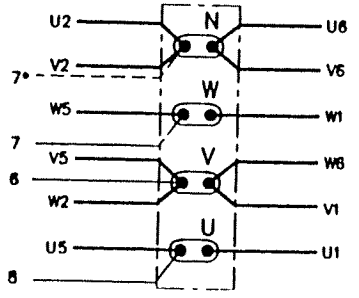

7* ALTERNATIVE FOR AVR IN LOW VOLT MODE
DETAILS ARE SHOWN ON BASE DIAGRAM
DROOP NOT AVAILABLE

DOUBLE DELTA 1PH 3 WIRE
OUTPUT TERMINALS HIGH VOLTS U.W.
LOW VOLTS U.N. AND W.N.

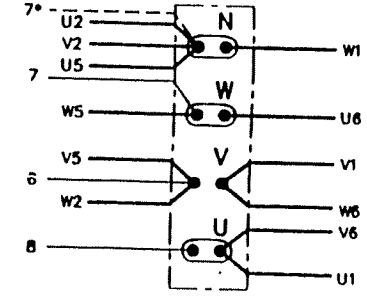

7* ALTERNATIVE FOR AVR IN LOW VOLT MODE
DETAILS ARE SHOWN ON BASE DIAGRAM
DROOP NOT AVAILABLE

MOD.	ISS.	DRN.	DATE	ALTERATION
3/9964	H	S.H.	11:4:95	DOUBLE DELTA CONNECTION - CENTRE POINT CHANGED FROM W TO N
3/9728	G	S.H.	13:12:94	DOUBLE DELTA CONNECTION BROUGHT INLINE WITH STATOR LEAD EXIT POSITIONS
3/9572	F	S.H.	17:10:94	OUTPUT TERMINALS - PARALLEL ZIG ZAG AND DOUBLE DELTA CHANGED
3/9324/	E	S.H.	4:7:94	DOUBLE DELTA - NOW IN LINE WITH LINK BOARD VERSION
3/8946/2	D	MLW	25.1.94	PARALLEL ZIG ZAG ADDED
3/8946/	C	MLW	13.1.94	DOUBLE DELTA CONNECTION ADDED, PARALLEL ZIG ZAG DELETED
3/8428	B	P.N.	17:3:93	DELTA CONNECTION U1 WAS U6 AND U6 WAS U1 ETC
3/8192	A	P.N.	5:1:93	ORIGINAL ISSUE

CERTIFIED PRINT (ONLY IF SIGNED)
BY
DATE
DRAWN P.N. 5:1:93
CH'D
APP'D

CONNECTION DIAGRAM

FRAME ---
CONTROL SERIES ---
POLES
No. OF ENDS 12
SENSING 2/3 PHASE

OTHER FEATURES

NEWAGE INTERNATIONAL Ltd
STAMFORD, ENGLAND

DA7-A100 | ISSUE H

SHEET 1 OF 1 SHEETS

Katolight Service - Master Repair Manual - Page 1627

DA7-1440	ISSUE A
FIRST W.O.	

IF IN DOUB -ASK

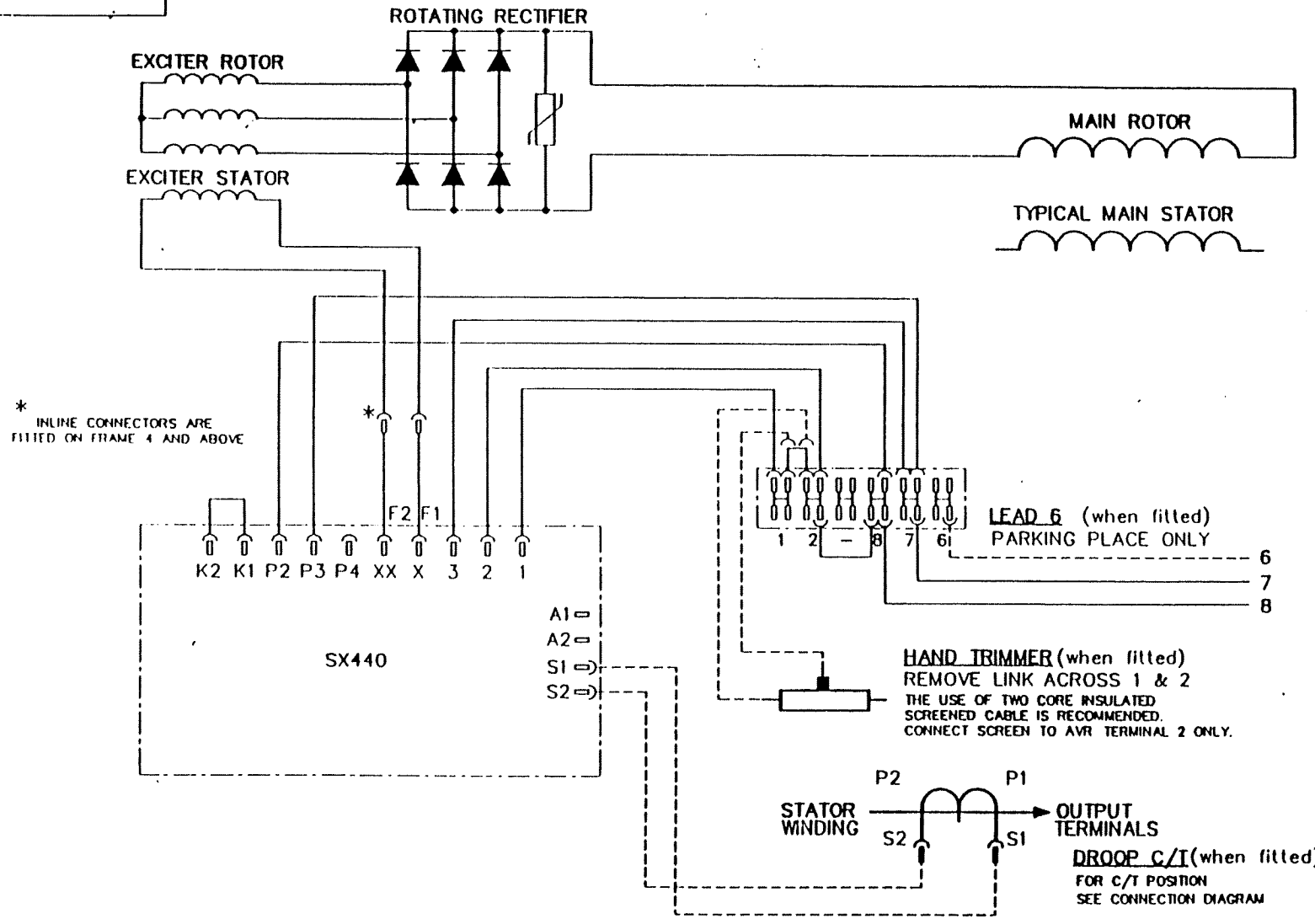

3/9120/	A	P.N.	19:4:94	ORIGINAL ISSUE
MOD.	ISS.	DRN.	DATE	ALTERATION

CERTIFIED PRINT			
(ONLY IF SIGNED)			
BY			
DATE			
DRAWN	P.N.	19:4:94	
CHK'D	TN	— " —	
APP'D	[signature]	25/4/94	

BASE DIAGRAM

FRAME ---	OTHER FEATURES
CONTROL SERIES SX440	
POLES	
No. OF ENDS ---	
SENSING 2 PHASE	
NEWAGE INTERNATIONAL Ltd STAMFORD . ENGLAND	DA7-1440 ISSUE A
	SHEET 1 OF 1 SHEETS

Katolight Service - Master Repair Manual - Page 1629

SX440 AUTOMATIC VOLTAGE REGULATOR (AVR)

SPECIFICATION, INSTALLATION AND ADJUSTMENTS

GENERAL DESCRIPTION

The SX440 is a half-wave phase-controlled thyristor type Automatic Voltage Regulator (AVR) and forms part of the excitation system for a brushless generator.

In addition to regulating the generator voltage, the AVR circuitry includes underspeed and sensing loss protection to ensure safe, reliable control of the generator. Excitation power is derived directly from the generator terminals.

Positive voltage build up from residual levels is ensured by the use of efficient semiconductors in the power circuitry of the AVR.

The AVR is linked with the main stator windings and the exciter field windings to provide closed loop control of the output voltage with load regulation of +/- 1%.

In addition to being powered from the main stator, the AVR also derives a sample voltage from the output windings for voltage control purposes. In response to this sample voltage, the AVR controls the power fed to the exciter field, and hence the main field, to maintain the machine output voltage within the specified limits, compensating for load, speed, temperature and power factor of the generator.

A frequency measuring circuit continually monitors the generator output and provides output underspeed protection of the excitation system, by reducing the output voltage proportionally with speed below a presettable threshold. A manual adjustment is provided for factory setting of the under frequency roll off point, (UFRO). This can easily be changed to 50 or 60 Hz in the field by push-on wire link selection.

Overvoltages caused by open circuit sensing terminals are avoided by sensing loss detection circuitry which reduces the generator terminal voltage to a safe fixed level.

Provision is made for the connection of a remote voltage trimmer, allowing the user fine control of the generator's output.

Accessories are available for this AVR. Please refer to factory for further details.

TECHNICAL SPECIFICATION

INPUT

Voltage	170-250 V ac max
Frequency	50-60 Hz nominal
Phase	1
Wire	2

OUTPUT

Voltage	max 90 V dc at 207 V ac input
Current	Continuous 4 A dc
	Transient 6 A for 10 seconds
Field Resistance	15 Ω minimum

REGULATION (See Note 1) +/- 1%

THERMAL DRIFT
(after 10 min)
1% for 40°C change in AVR ambient

TYPICAL SYSTEM RESPONSE

Field current to 90%	80ms
Machine Volts to 97%	300ms

EXTERNAL VOLTAGE ADJUSTMENT (see note 2)
+/- 8% with 1 K Ω trimmer

UNDER FREQUENCY PROTECTION

Set Point (See Note 3)	95% Hz
Slope	170% down to 30 Hz

UNIT POWER DISSIPATION
12 watts maximum

BUILD UP VOLTAGE
3.5 Vac @ AVR terminals

ACCESSORY INPUT
+/- 1V = +/- 13% change in output volts

QUADRATURE DROOP SENSITIVITY

Maximum sensitivity	(10 Ω Burden)
	0.07A for 5% droop @ 0p.f.

ENVIRONMENTAL

Vibration	20-100 Hz	50mm/sec
	100 Hz-2 kHz	3.3g
Relative Humidity	0-60°C	95%
Operating Temperature		-40°C to + 70°C
Storage Temperature		-55°C + 80°C

NOTES
1. With 4% engine governing
2. External trim range is reduced to +/- 5% with 1 K Ω trimmer when 3 phase sensing is fitted.
3. Factory set, semi-sealed, jumper selectable.

DESIGN DETAILS

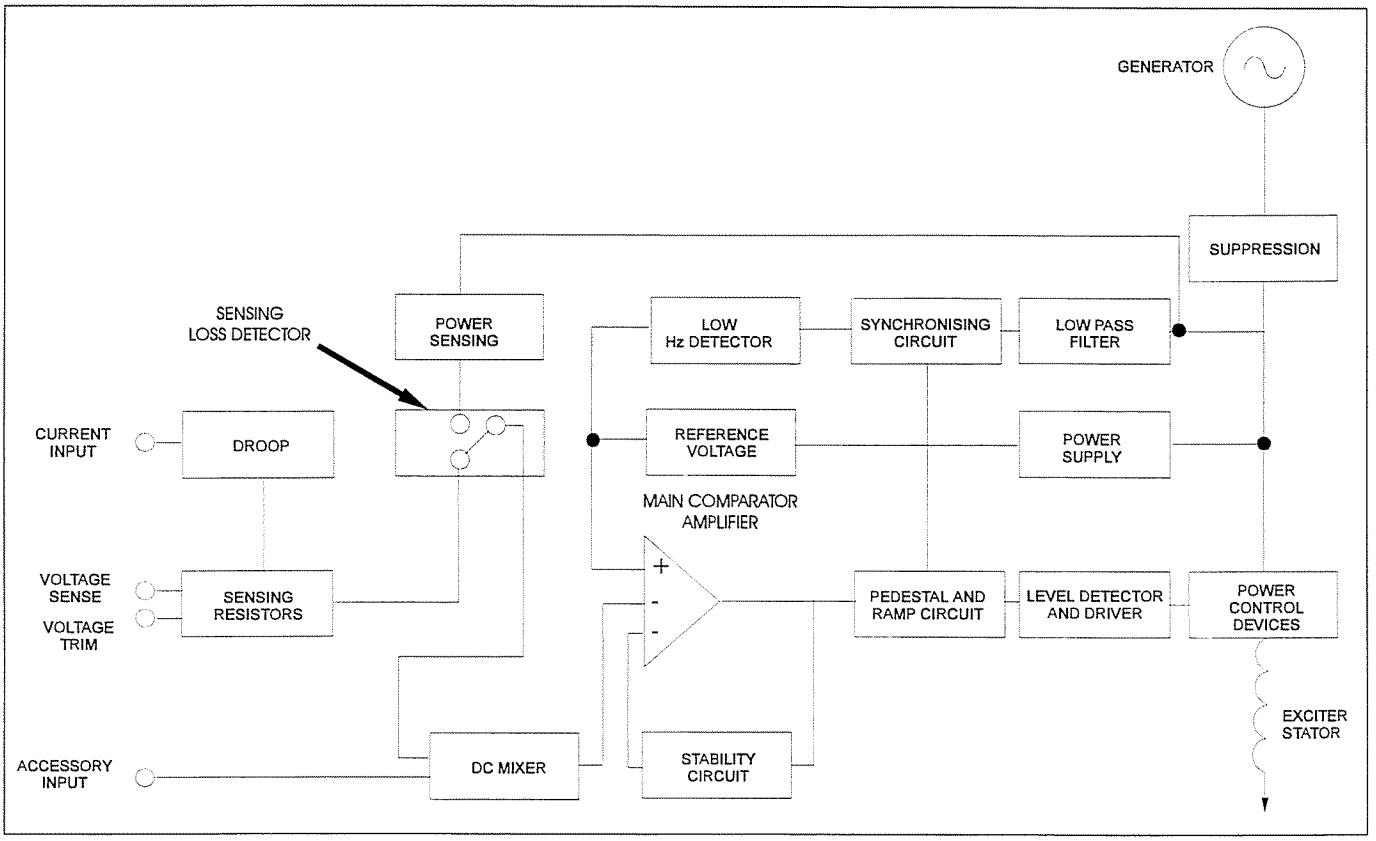

The main functions of the AVR are:

Sensing Resistors take a proportion of the generator output voltage and attenuate it. This input chain of resistors includes the range potentiometer and hand trimmer which adjust the generator voltage. An isolating transformer allows connection to windings of different polarity and phase. An operational precision rectifier converts the ac sensing voltage into dc for further processing.

Quadrature droop circuit converts the current input into a voltage, which is phase mixed with the sensing voltage. The result is a net increase in the output from the sensing network as the power factor lags, causing the reduction in excitation needed for reactive load sharing of parallelled generators.

A trimmer allows control over the amount of droop signal.

Sensing loss detector is an electronic changeover switch which normally connects the main comparator/amplifier to the "input sensing" network, and automatically changes over to the "power sensing" network when the normal sensing voltage is lost.

DC Mixer provides an interface between the AVR and accessories and allows the generators excitation to be controlled by adding or subtracting the accessory dc output voltage to the AVR rectifier sensing voltage.

Main Comparator/Amplifier compares the sensing voltage to the "**reference voltage**" and amplifies the difference (error) to provide a controlling signal for power devices. The "**pedestal and ramp**" circuit and "**level detector and driver**" provide the means to infinitely control the conduction period of the output device over each half cycle (phase control), and provide the exciter with the required power to maintain the generator voltage within the specified limits. The "**Stability circuit**" provides adjustable negative ac feedback to ensure good steady state and transient performance of the control system.

Low Hz detector measures the period of each electrical cycle and causes the reference voltage to be reduced approximately linearly with speed below a presettable threshold. A light emitting diode gives indication of underspeed running.

Synchronising circuit provides a short pulse at the zero crossing of each cycle and is used to synchronise the underspeed and pedestal and ramp circuit to the generator waveform. The circuit is preceded by a "low pass filter" to prevent false zero crossing pulses caused by severely distorted waveforms.

Power Devices are configured as half-wave thyristor and freewheel diode to vary the amount of exciter field current in response to the error signal produced by the main comparator.

Suppression components are included to prevent sub cycle voltage spikes damaging the AVR components and also to reduce the amount of AVR thyristor noise on the main terminals of the generator.

Power Supply components consist of zener diodes with dropper resistor and smoothing to provide the required voltages for the integrated circuits and reference voltage.

The AVR is fully encapsulated to ensure long trouble-free operation. It is usually fitted on a panel of the terminal box. It can also be separately fitted in a switchboard.

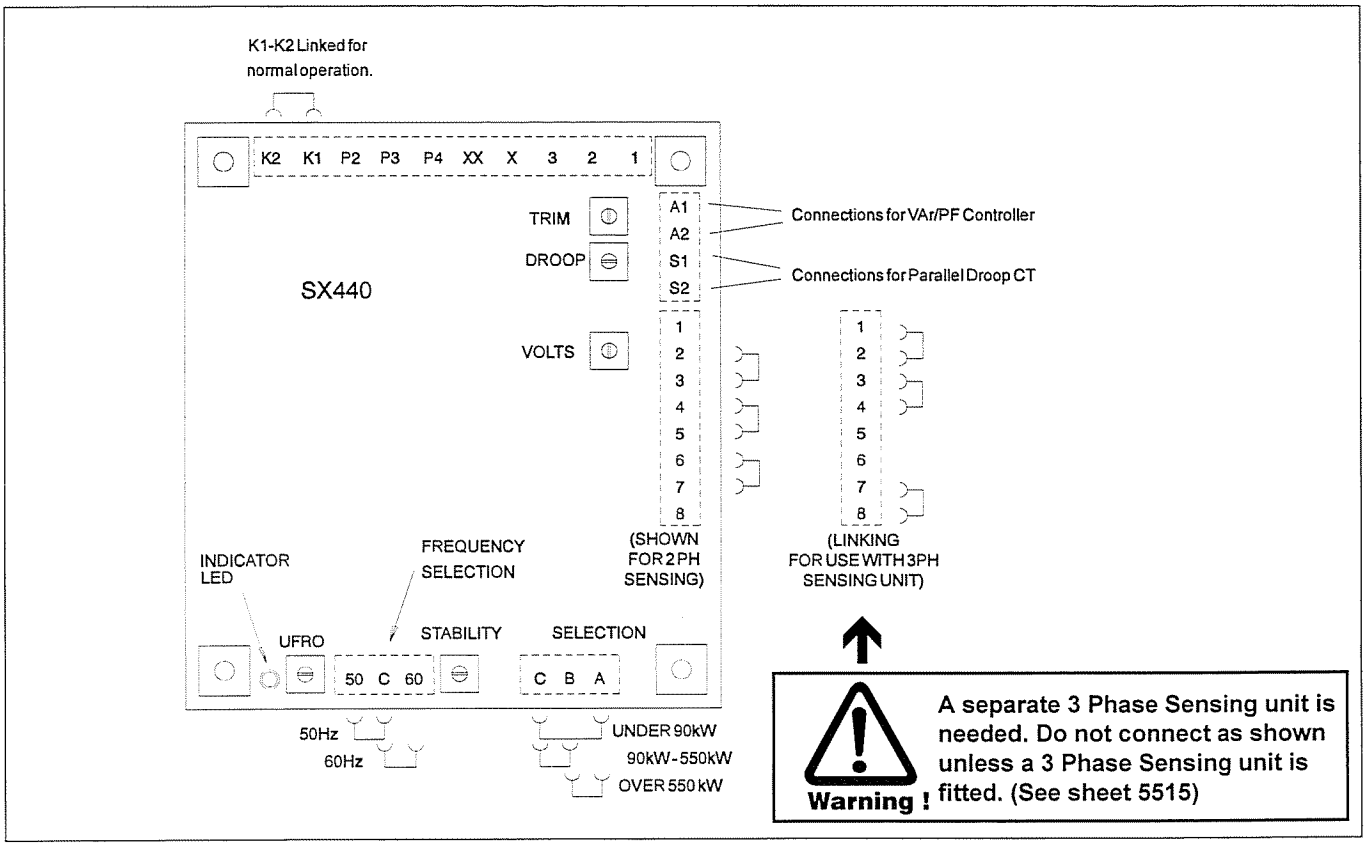

SUMMARY OF AVR CONTROLS		
CONTROL	**FUNCTION**	**DIRECTION**
VOLTS	TO ADJUST GENERATOR OUTPUT VOLTAGE	CLOCKWISE INCREASES OUTPUT VOLTAGE
STABILITY	TO PREVENT VOLTAGE HUNTING	CLOCKWISE INCREASES STABILITY OR DAMPING EFFECT
UFRO	TO SET UNDER FREQUENCY ROLL OFF KNEE POINT	CLOCKWISE REDUCES THE KNEE POINT FREQUENCY
DROOP	TO SET GENERATOR OR DROOP TO 5% AT FULL LOAD 0 PF	CLOCKWISE INCREASES THE DROOP
V/TRIM	TO MATCH AVR INPUT TO ACCESSORY OUTPUT	CLOCKWISE ALLOWS THE ACCESSORY MORE CONTROL OVER AVR

ADJUSTMENT OF AVR CONTROLS

VOLTAGE ADJUSTMENT

The generator output voltage is set at the factory, but can be altered by careful adjustment of the volts control on the AVR board, or by the external hand trimmer if fitted. Terminals 1 & 2 on the auxiliary terminal block inside the generator terminal box will be fitted with a shorting link if no hand trimmer is required.

Warning ! **Do not increase the voltage above the rated generator voltage. If in doubt, refer to the rating plate mounted on the generator case.**

If a replacement AVR has been fitted or re-setting of the VOLTS adjustment is required, proceed as follows:-

1) Before running generator, turn VOLTS control fully anti-clockwise.

2) Turn remote volts trimmer (if fitted) to midway position.

3) Turn STABILITY control to midway position.

4) Connect a suitable voltmeter (0-300V ac) across line to neutral of the generator.

5) Start generator set, and run on no load at nominal frequency e.g. 50-53Hz or 60-63Hz.

6) If the red Light Emitting Diode (LED) is illuminated, refer to the Under Frequency Roll Off (UFRO) adjustment.

7) Carefully turn VOLTS control clockwise until rated voltage is reached.

8) If instability is present at rated voltage, refer to stability adjustment, then re-adjust voltage if necessary.

9) Voltage adjustment is now completed.

STABILITY ADJUSTMENT

The AVR includes a stability or damping circuit to provide good steady state and transient performance of the generator.

The correct setting can be found by running the generator at no load and slowly turning the stability control anti-clockwise until the generator voltage starts to become unstable.

The optimum or critically damped position is slightly clockwise from this point (i.e. where the machine volts are stable but close to the unstable region).

OPTIMUM RESPONSE SELECTION

The "jumper" selector lead should be correctly linked (A,B,C at the bottom of the board) for the frame size of the generator (See diagram).

UNDER FREQUENCY ROLL OFF (UFRO) ADJUSTMENT

The AVR incorporates an underspeed protection circuit which gives a volts/Hz characteristic when the generator speed falls below a presettable threshold known as the "knee" point.

The red Light Emitting Diode (LED) gives indication that the UFRO circuit is operating.

The UFRO adjustment is preset and sealed at the works and only requires the selection of 50/60Hz using the jumper link.

For optimum setting, the LED should illuminate as the frequency falls just below nominal, i.e. 47Hz on a 50Hz system or 57Hz on a 60Hz system.

DROOP ADJUSTMENT

Generators intended for parallel operation are fitted with a quadrature droop C.T. which provides a power factor dependent signal for the AVR. The C.T. is connected to S1, S2 on the AVR.

The DROOP adjustment is normally preset in the works to give 5% voltage droop at full load zero power factor.

Clockwise increases the amount of C.T. signal injected into the AVR and increases the droop with lagging power factor (cos Ø).

If a three phase sensing unit is fitted droop adjustment is made on this separate unit.

With the control fully anti-clockwise there is no droop.

TRIM ADJUSTMENT (V/TRIM)

An auxiliary input is provided to connect to the VAr/PF controller, (A1,A2). It is designed to accept dc signals up to +/- 5 volts.

The dc signal on this input adds to or subtracts from the AVR sensing circuit, depending on polarity.

The V/Trim control allows the user to adjust the sensitivity of the VPF controller.

With V/Trim fully anti-clockwise the VPF controller has no effect. Clockwise it has maximum effect. Normal setting is fully clockwise.

NEWAGE INTERNATIONAL LIMITED

Newage Limited, The Jefferson Building, PO Box 346, 106 Chesley Drive, 2nd Fl., Media, Pennsylvania 19063 USA.
Telephone: (1) 610 565 8681. Fax: (1) 610 565 9413

PRINTED IN ENGLAND

NEWAGE

LIMITED

A SUBSIDIARY OF NEWAGE INTERNATIONAL LIMITED

AC GENERATOR WARRANTY

GENERAL

Newage Limited warrants any product of its manufacture to be free from defects in materials and workmanship for a period of time dependent upon service and application.

Stamford and Markon Generators are built in accordance with specific standards as indicated in our sales literature. Conformance with these standards on Newage's part requires that the products be used as intended and certain precautions be taken by the user and assembler.

AC Generators must be properly protected, ventilated, and mounted to ensure trouble-free running. The user should take precautions to ensure that the ingress of moisture, recirculating exhaust, dust, insects, rodents and debris are avoided. Coastal and marine installations require protection against salt-laden spray. Anti-condensation heaters must be installed where temperature differentials and relative humidity promote condensation. Electrical system protection must be properly selected, rated, installed and functioning.

Newage's warranty period does not extend beyond that offered by the original purchaser, and is voided by any resale to other than the first owner/user.

WARRANTY PERIODS

A. Emergency or Standby Duty

Standby generators must be permanently installed, properly enclosed and ventilated, and used as back up to the normal power source. Mobile or rental sets do not fit this category.

The warranty period is 24 months from date of installation by the first owner/user, or 30 months after date of shipment by Newage, whichever is the shorter, or 1000 hours of operation, limited to a maximum of 500 hours per year, for 2 years, whichever is the shorter.

B. Continuous or Prime Duty

Continuous or prime power service describes operation in a permanent or mobile application where no other source of power is generally available. Rental sets, and specific products for irrigation and refrigeration meet this criteria, irrespective of running hours. Cogeneration and peak shaving installations are considered prime power.

The warranty period is 12 months from date of start-up by the first owner/user, or 18 months after date of shipment by Newage, whichever is the shorter. Hours of operation are unrestricted, provided service is conducted as indicated in our Operation and Maintenance Manuals, and maintenance is performed per the manual.

CORRECTIVE ACTION

Warranty work can only be approved and initiated by Newage Limited after receipt of the failure details by phone or fax. This will permit Newage Limited to determine the best course of action. Newage will not participate in any claim where work has proceeded without prior knowledge being provided.

Newage Limited will make good by repair, or, at its option, by replacement, any fault which, under proper use, appears in the goods within the warranty period and is found on examination by Newage or its appointed representative to be solely due to defective materials or workmanship. The defective part or parts must be promptly returned, prepaid with all identification numbers and marks intact to a Newage facility, representative, or, if appropriate, to the dealer who supplied the goods. Where such a course of action is impossible or inappropriate, Newage Limited will accept a set of photographs from its appointed representative permitting a visual analysis of the failure prior to any corrective action.

The repaired or replacement part will be delivered prepaid to the first destination within the 48 contiguous states and Canadian provinces, free of charge. This warranty does not cover the removing/installing and defective/replacement equipment, nor any costs associated with equipment as manufactured by others that may be impacted by the defect.

CONSEQUENTIAL DAMAGE AND LIABILITY

Newage Limited disclaims any liability for consequential damages (personal and property) from the buyer and its customers resulting from a defect within the warranty period. Newage's maximum liability will not exceed the purchase price of the Newage product purchased by the first buyer and shall be limited to repair, replacement, or refund.

Newage Limited liability under this warranty shall be in lieu of any warranty on condition implied by law as to the quality or fitness for any particular purpose of the goods, and save as expressly provided in the warranty. Newage Limited shall not be under any liability, whether in contract, tort or otherwise, with respect to defects in goods delivered, or for any injury, damage or loss resulting from such defects, or from any work done in connection therewith.

JUDGEMENT

Newage Limited judgment shall, in all cases be final and conclusive, and claimant shall accept the Newage decision on all questions relating to defects and the exchange, repair, or replacement of a part or parts.

STAMFORD

AC GENERATORS FROM NEWAGE INTERNATIONAL

MARKON

NEWAGE LIMITED
4700 MAIN ST. NE • FRIDLEY MN • 55421
TOLL FREE (

NEWAGE STAMFORD

NEWAGE LTD.

A SUBSIDIARY OF NEWAGE INTERNATIONAL LTD.

P.O. Box 346
Jefferson Building
106 chesley Drive, 2 Floor
Media, PA 19063

Technical Note

ITEM: MX & SX AVR's

SUB: U.F.R.O Setting

The setting on the new AVR's may in certain instances, require tuning.

The symptoms are as follows:

1) As load increases, the engine speed falls to the nominal frequency, ie, 60 or 50Hz, or slightly lower, 50 or 49Hz.

2) When this happens, the U.F.R.O. circuit cuts in, and the voltage drops very quickly, shedding load and allowing the engine to recover speed slightly.

3) As it recovers, the U.F.R.O. circuit switches off, and the volts rise to normal, causing the engine load to increase, dropping the speed again.

4) At this point, the U.F.R.O. cuts in again, repeating the whole procedure, setting up a volts/ Hz fluctuation with a 5 to 10% voltage swing.

To resolve the problem:

1) Check to see if the L.E.D. light on the AVR is switching on and off.

2) For 60Hz readjust the U.F.R.O. setting to come on at 57Hz.

3) Then turn the "Dip" control fully counter clockwise to ensure this is fully out of the circuit.

RWG:dmw

NEWAGE
INTERNATIONAL

IMPORTANT NOTICE

HAZARD - WARNING LABELS

The generator is supplied as a component part for installation in a generating set and is in many cases subjected to a final paint spraying operation. It is therefore desirable to fit labels on the exterior of the machine after the finishing paint is applied.

To this end a card of warning labels with instructions showing their desired position is enclosed with this manual.

It is the responsibility of the generating set manufacturer to ensure that the correct labels are fitted and are clearly visible.

September 199

DA7-A101	ISSUE E
FIRST W.O.	

IF IN DOUBT-ASK

MAIN STATOR (12 ENDS)

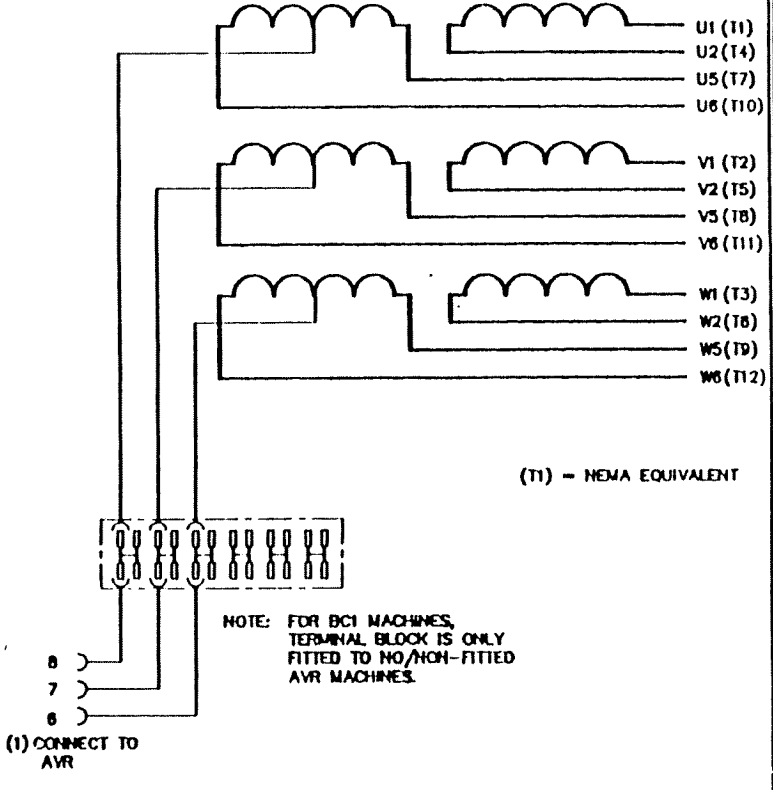

(1) LEAD 6 MAY NOT BE REQUIRED FULL DETAILS ARE SHOWN ON THE BASE DIAGRAM.

MAIN TERMINAL CONNECTIONS

SERIES STAR 3PH 4W

OUTPUT TERMINALS U.V.W.N.

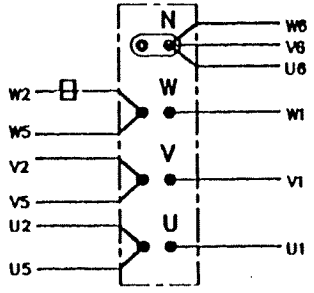

☐ DROOP C/T POSITION(when fitted)
CONNECTIONS ARE SHOWN ON BASE DIAGRAM

SERIES DELTA 3PH 4W

OUTPUT TERMINALS U.V.W.N.

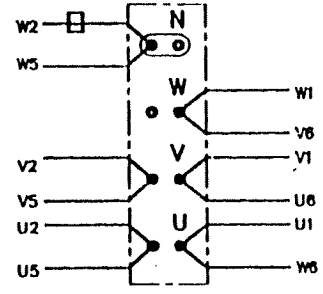

☐ DROOP C/T POSITION(when fitted)
CONNECTIONS ARE SHOWN ON BASE DIAGRAM

PARALLEL STAR 3PH 4W

OUTPUT TERMINALS U.V.W.N.

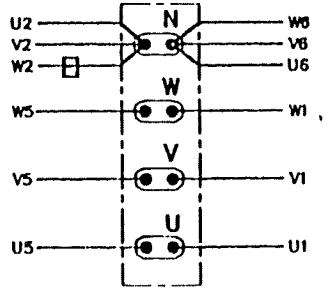

☐ DROOP C/T POSITION(when fitted)
CONNECTIONS ARE SHOWN ON BASE DIAGRAM

MOD.	ISS.	DRN.	DATE	ALTERATION
3/9810	E	S.H.	25:1:95	TERMINAL BLOCK NOTE ALTERED
3/9762	D	S.H.	4:1:95	NOTE ADDED TO TERMINAL BLOCK FOR BC MACHINES ONLY
3/8699	C	P.N.	18:8:94	ADDED TERMINAL BLOCK
3/8428	B	P.N.	17:3:94	DELTA CONNECTION U1 WAS U6 AND U6 WAS U1 ETC
3/8192	A	P.N.	5:1:93	ORIGINAL ISSUE

CERTIFIED PRINT (ONLY IF SIGNED)		
BY		
DATE		
DRAWN	P.N.	5:1:93
CH'D	S.H.	25.1.95
APP'D	CAL	25.1.95

CONNECTION DIAGRAM

FRAME	---
CONTROL	SERIES ---
POLES	
No. OF ENDS	12
SENSING	2/3 PHASE

NEWAGE INTERNATIONAL Ltd
STAMFORD, ENGLAND

OTHER FEATURES

DA7-A101 ISSUE E

SHEET 1 OF 1 SHEETS

Katolight Service - Master Repair Manual - Page 1641

DA7-1460 | ISSUE B

FIRST W.O.

IF IN DOUBT-ASK

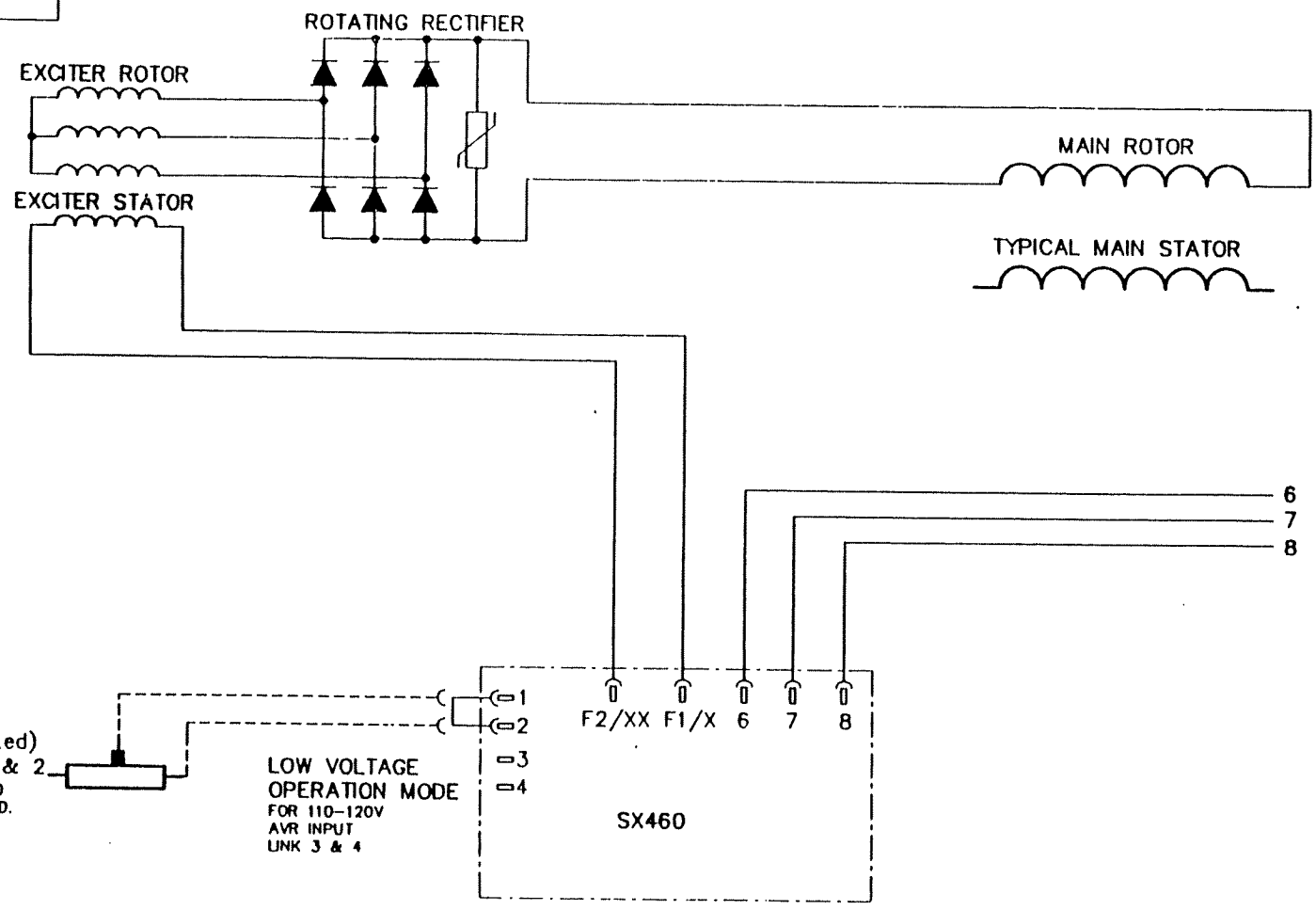

DETAILS OF THE MAIN STATOR AND MAIN TERMINAL CONNECTIONS ARE SHOWN ON SEPARATE WIRING DIAGRAM

MOD.	ISS.	DRN.	DATE	ALTERATION
3/9762	B	S.H.	4:1:95	LEAD 6 ADDED
3/8192	A	P.N.	5:1:93	ORIGINAL ISSUE

CERTIFIED PRINT		
(ONLY IF SIGNED)		
BY		
DATE		
DRAWN	P.N.	5:1:93
CHK'D	S.H.	4:1:95
APP'D		4.1.95

BASE DIAGRAM

FRAME	---
CONTROL	SERIES SX460
POLES	
No. OF ENDS	---
SENSING	2 PHASE

OTHER FEATURES

NEWAGE INTERNATIONAL Ltd
STAMFORD, ENGLAND

DA7-1460 | ISSUE B

SHEET 1 OF 1 SHEETS

Katolight Service - Master Repair Manual - Page 1643

NUPART

SX460 AUTOMATIC VOLTAGE REGULATOR (AVR)

SPECIFICATION, INSTALLATION AND ADJUSTMENTS

GENERAL DESCRIPTION

The SX460 is a half-wave phase-controlled thyristor type Automatic Voltage Regulator (AVR) and forms part of the excitation system for a brushless generator.

In addition to regulating the generator voltage, the AVR circuitry includes underspeed and sensing loss protection to ensure safe, reliable control of the generator. Excitation power is derived directly from the generator terminals.

Positive voltage build up from residual levels is ensured by the use of efficient semiconductors in the power circuitry of the AVR.

The AVR is linked with the main stator windings and the exciter field windings to provide closed loop control of the output voltage with load regulation of +/- 1.5%.

In addition to being powered from the main stator, the AVR also derives a sample voltage from the output windings for voltage control purposes. In response to this sample voltage, the AVR controls the power fed to the exciter field, and hence the main field, to maintain the machine output voltage within the specified limits, compensating for load, speed, temperature and power factor of the generator.

A frequency measuring circuit continually monitors the generator output and provides output underspeed protection of the excitation system, by reducing the output voltage proportionally with speed below a presettable threshold. A manual adjustment is provided for factory setting of the under frequency roll off point, (UFRO). This can easily be changed to 50 or 60 Hz in the field by push-on wire link selection.

Provision is made for the connection of a remote voltage trimmer, allowing the user fine control of the generator's output.

TECHNICAL SPECIFICATION

INPUT

Voltage:	85-125Vac	} Jumper Selectable
	170-250Vac	
Frequency:	50 - 60Hz Nominal	
Phase:	1	

OUTPUT

Voltage:	max 90Vdc at 207Vac input
Current:	Continuous 4A dc
	Transient 6A for 10 seconds
Field Resistance:	15Ω minimum

REGULATION

(See Note 1) +/- 1.5%

THERMAL DRIFT

(after 10 min)
1% for 40°C change in AVR ambient

TYPICAL SYSTEM RESPONSE

Field current to 90%:	80ms
Machine Volts to 97%:	300ms

EXTERNAL VOLTAGE ADJUSTMENT

+/- 5% with 1K Ω trimmer

UNDER FREQUENCY PROTECTION

Set Point (See Note 2): 95% Hz
Slope: 170% down to 30Hz

UNIT POWER DISSIPATION

10 watts maximum

ENVIRONMENTAL

Vibration:	20-100Hz	50mm/sec
	100Hz-2kHz	3.3g
Relative Humidity:	0-60°C	95%
Operating Temperature		-40°C to + 60°C
Storage Temperature		-55°C + 80°C

NOTES:
1. With 4% engine governing
2. Factory set, semi-sealed, jumper selectable.

DESIGN DETAILS

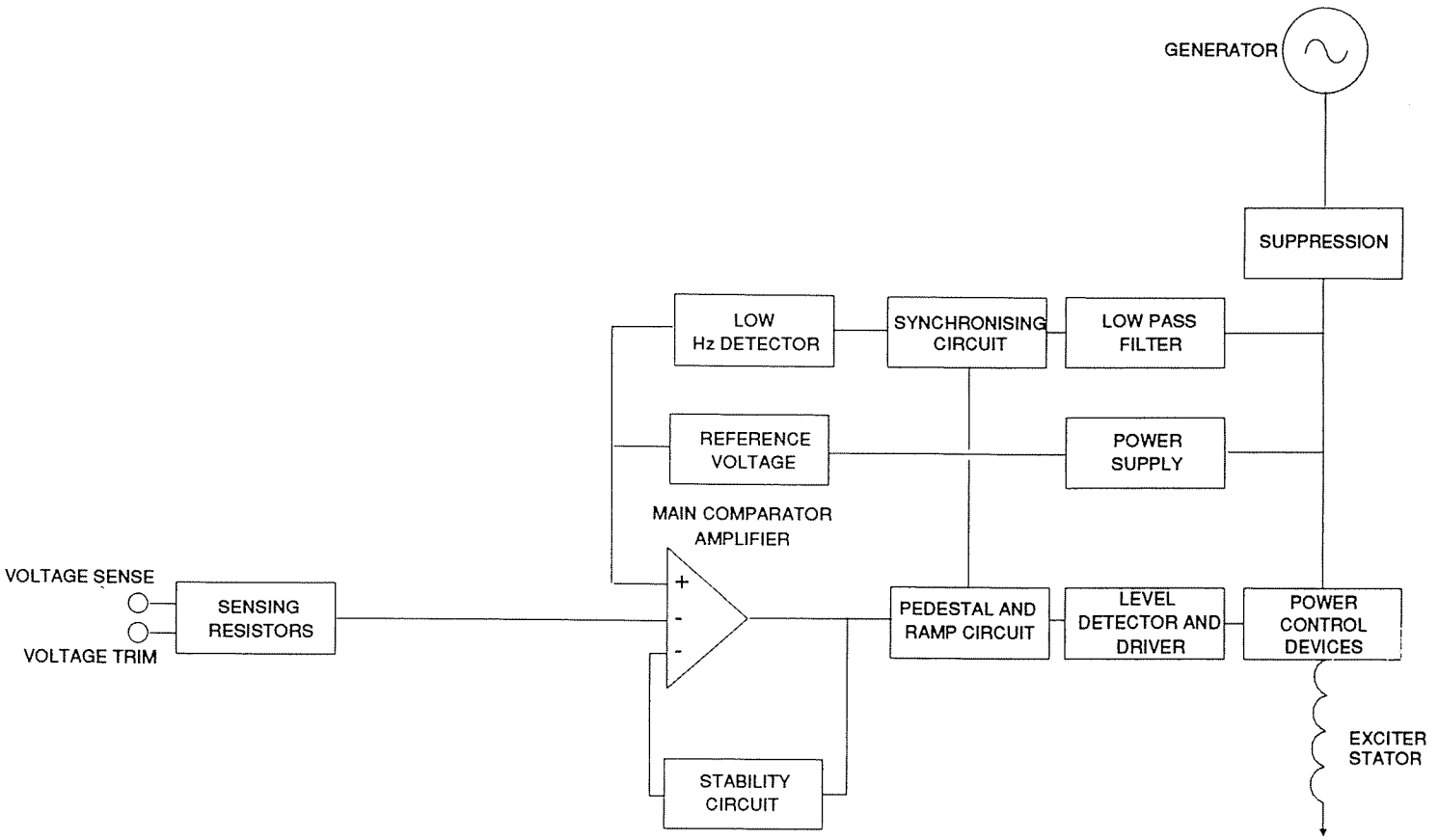

The main functions of the AVR are:

Sensing Resistors take a proportion of the generator output voltage and attenuate it. This input chain of resistors includes the range potentiometer and hand trimmer which adjust the generator voltage. An operational precision rectifier converts the a.c. for further processing.

Main Comparator/Amplifier compares the sensing voltage to the "reference voltage" and amplifies the difference (error) to provide a controlling signal for the power devices. The "pedestal and ramp" circuit and "level detector and driver" infinitely control the conduction period of the output device over each half cycle (phase control), and hence provide the exciter with the required power to maintain the generator voltage within specified limits. The stability circuit provides adjustable negative ac feedback to ensure good steady state and transient performance of the control system.

Low Hz detector measures the period of each electrical cycle and causes the reference voltage to be reduced approximately linearly with speed below a presettable threshold. A Light Emitting Diode gives indication of underspeed running.

Synchronising circuit provides a short pulse at zero crossing at each half cycle and is used to synchronise the underspeed and pedestal and ramp circuit to the generator waveform. The circuit is preceded by a low pass filter to prevent false zero crossing pulses caused by distorted waveforms.

Power devices are configured as half wave thyristor and freewheel diode to vary the amount of exciter field current in response to the error signal produced by the main comparator.

Suppression components are included to prevent sub cycle voltage spikes damaging the AVR components and also to reduce the amount of AVR thyristor noise on the main terminals of the generator.

Power Supply components consist of zener diodes with dropper resistor and smoothing to provide the required voltages for the integrated circuits and reference voltage.

FITTING AND OPERATING

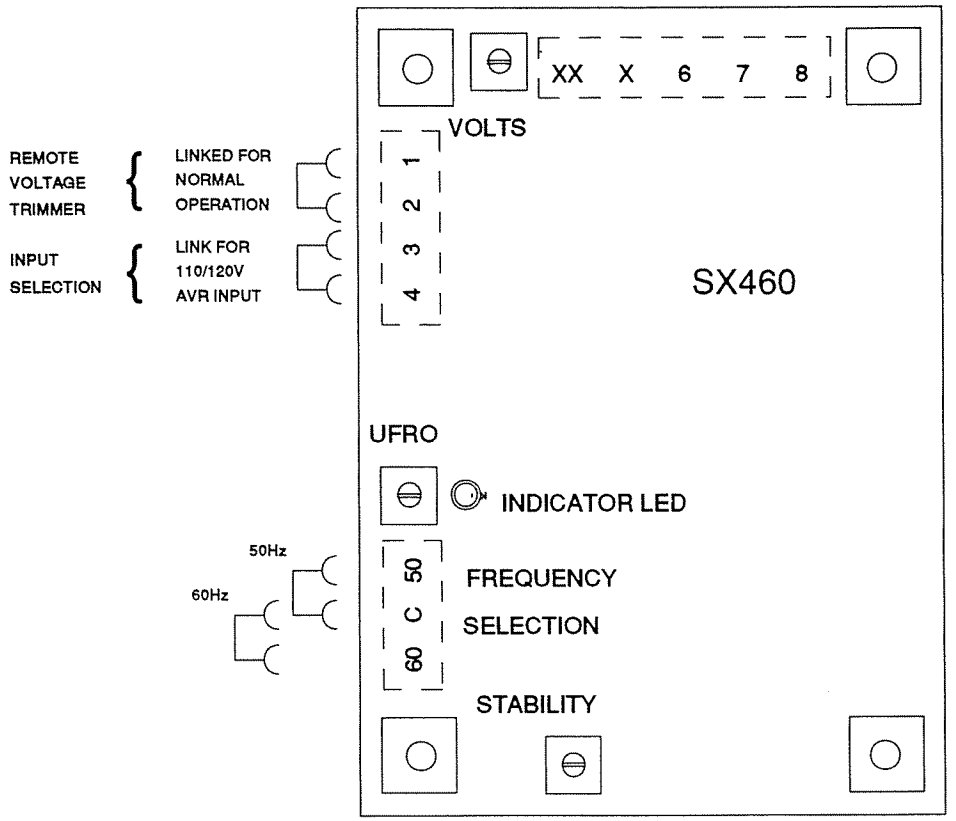

The AVR is fully encapsulated to ensure long-trouble-free operation. It is usually fitted on a panel of the terminal box. It can also be separately fitted in a switchboard.

ADJUSTMENT OF AVR CONTROLS

Voltage Adjustment

The generator output voltage is set at the factory, but can be altered by careful adjustment of the volts control on the AVR board, or by the external hand trimmer if fitted. Terminals 1 and 2 on the AVR will be fitted with a shorting link if no hand trimmer is required. Terminals 3 and 4 are used for low voltage only, and are linked only for special low voltage applications.

WARNING!
DO NOT INCREASE THE VOLTAGE ABOVE THE RATED GENERATOR VOLTAGE. IF IN DOUBT, REFER TO THE RATING PLATE MOUNTED ON THE GENERATOR CASE.

If a replacement AVR has been fitted or re-setting of the VOLTS adjustment is required, the method is:

1) Before running generator, turn VOLTS control fully anti-clockwise

2) Turn remote volts trimmer (if fitted) to midway position

3) Turn STABILITY control to midway position

4) Connect a suitable voltmeter (0-300V ac) across line to neutral of the generator

5) Start generator set, and run on no load at nominal frequency e.g. 50-53Hz or 60-63Hz

6) If the red Light Emitting Diode (LED) is illuminated, refer to the Under Frequency Roll Off (UFRO) adjustment

7) Carefully turn VOLTS control clockwise until rated voltage is reached

8) If instability is present at rated voltage, refer to stability adjustment, then re-adjust voltage if necessary

9) Voltage adjustment is now completed

Stability Adjustment

The AVR includes a stability or damping circuit to provide good steady state and transient performance of the generator.

The correct setting can be found by running the generator at no load and slowly turning the stability control anti-clockwise until the generator voltage starts to become unstable.

The optimum or critically damped position is slightly clockwise from this point (i.e. where the machine volts are stable but close to the unstable region).

Under Frequency Roll Off (UFRO) adjustment

The AVR incorporates an underspeed protection circuit which gives a volts/Hz characteristic when the generator speed falls below a presettable threshold known as the "knee" point.

The red Light Emitting Diode (LED) gives indication that the UFRO circuit is operating.

The UFRO adjustment is preset and sealed and only requires the selection of 50/60Hz using the jumper link.

For optimum setting, the LED should illuminate as the frequency falls just below nominal, i.e. 47Hz on a 50Hz system or 57Hz on a 60Hz system.

SUMMARY OF AVR CONTROLS

CONTROL	FUNCTION	DIRECTION
VOLTS	TO ADJUST GENERATOR OUTPUT VOLTAGE	CLOCKWISE INCREASES OUTPUT VOLTAGE
STABILITY	TO PREVENT VOLTAGE HUNTING	CLOCKWISE INCREASES STABILITY OR DAMPING EFFECT
UFRO	TO SET UNDER FREQUENCY ROLL OFF KNEE POINT	CLOCKWISE REDUCES THE KNEE POINT FREQUENCY

NEWAGE INTERNATIONAL LIMITED REGISTERED OFFICE AND ADDRESS: PO BOX 17 BARNACK ROAD STAMFORD LINCOLNSHIRE PE9 2NB ENGLAND
TELEPHONE: 0780 62552 TELEX: 32268 FAX: 0780 51617 REGISTERED IN ENGLAND NO. 441273

Printed in England

CONFIDENTIAL INFORMATION
OF BASLER ELECTRIC COMPANY, HIGHLAND, IL. IT IS LOANED FOR CONFIDENTIAL USE, SUBJECT TO RETURN ON REQUEST, AND WITH THE MUTUAL UNDERSTANDING THAT IT WILL NOT BE USED IN ANY MANNER DETRIMENTAL TO THE INTEREST OF BASLER ELECTRIC COMPANY.

INSTRUCTION MANUAL FOR VOLTAGE REGULATOR Model: VR63-4/UL

Publication:
9 1668 00 994
© 1998, Basler Electric Co., Highland, IL 62249
First Printing March 1984
Revision: J September 1998
ECO: 143

BASLER ELECTRIC, BOX 269, HIGHLAND, IL 62249 PHONE 618/654-2341 FAX 618/654-2351

INTRODUCTION

The VR63-4/UL Voltage Regulators are designed for use on 50/60 Hz brushless generators. The regulator includes frequency compensation, overexcitation shutdown, a solid-state build-up circuit, and EMI filtering.

WARNING

To prevent personal injury or equipment damage, only qualified technicians or operators should install, operate, or service this device.

ELECTRICAL SPECIFICATIONS

Dc Output Power:
4 Adc at 63 Vdc (252W) maximum continuous,
7 Adc at 100 Vdc (700W) forcing one minute (at 240 Vac input).

Exciter Field Dc Resistance:
15 ohms minimum; 100 ohms maximum.

Ac Power Input:
Operating range: 190 Vac to 240 Vac, ±10% Single phase, 50/60 Hz, Burden 500 VA.

Sensing Input:

190-240 Vac, Single phase, 50/60 Hz ±10%, common with AC Power Input.

Voltage Adjust Range:
171-264 Vac.

Regulation Accuracy:
Better than ±1.0% no load to full load.

Response Time:
Less than 1.5 cycles for ±10% change in sensing voltage.

EMI Suppression:
Internal electromagnetic interference filter (EMI filter).

Overexcitation Shutdown:
Output power is removed under the following conditions: Exciter field voltage exceeds 100±5 Vdc for a time inversely proportional to voltage magnitude, or instantaneously if the exciter field voltage exceeds 135±5 Vdc.

Voltage Build-up:
Internal provisions for automatic voltage build-up from generator residual voltages as low as 10 Vac.

Power Dissipation:
8 Watts maximum.

PHYSICAL SPECIFICATIONS

Operating Temperature:
-40° C (-40° F) to +60° C (+140° F).

Storage Temperature:
-65° C (-85° F) to +85° C (+185° F).

Vibration:
Withstands 1.3 Gs at 2 to 27 Hz; 0.036" double amplitude at 27 to 52 Hz; and 5 Gs at 52 to 1000 Hz.

Shock:
Withstands up to 20 Gs in each of three mutually perpendicular axes.

Weight:
14 oz. (0.40 kg) Net.

CSA Approved/UL Recognized

FUSES

It is recommended that fuses with high interruption capability be installed per the interconnection diagram to protect wiring from faults before the regulator. Refer to the *Interconnection Drawings*.

NOTE

Fuse must be installed per the interconnection diagrams to avoid interrupting the field current.

MOUNTING

The regulator may be mounted in any position. Refer to the drilling diagrams.

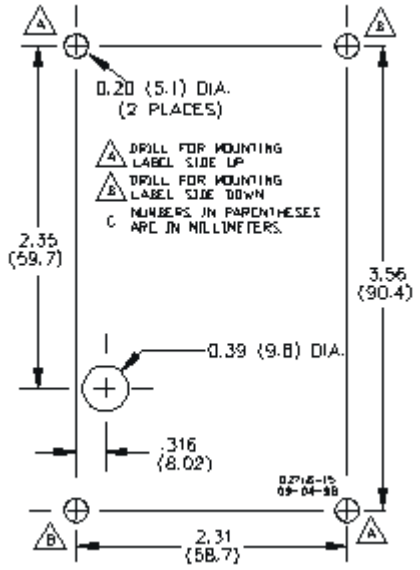

Drilling Diagram

EXCITER FIELD POWER CIRCUIT (wires F+ and F-).

Connect the regulator wire F+ to the brushless exciter field terminal F+, and wire F- to terminal F-.

CAUTION

The dc resistance of the exciter field must be equal to or greater than 15 ohms and less than 100 ohms.

POWER/SENSING INPUT CIRCUIT (wires 3 and 4)

Connect as shown by the *Interconnection Diagrams.*

Power for the exciter field and regulator circuitry is derived from the generator output or auxiliary winding. The operable power input range is 171 to 264 Vac and is connected to Terminals 3 and 4.

FREQUENCY COMPENSATION

The frequency compensation characteristic is to improve system load pickup performance by restraining voltage recovery until frequency has also started to recover.

For 50 Hz system, the regulator is preset at the factory for a 45 Hz “corner frequency”. For 60 Hz systems, a 55 Hz “corner frequency”. is achieved by cutting the external Hz jumper wires on the generator. Be sure to insulate the the two wires so that they are not exposed.

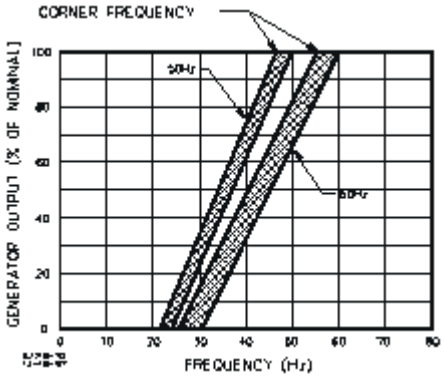

Frequency Compensation Curves

OVEREXCITATION SHUTDOWN

If the exciter field voltage exceeds 100 ±5 Vdc, the regulator automatically removes the field current after a time delay. The time delay is inversely proportional to the magnitude of the detected overvoltage condition up to the 135 Vdc point. Beyond 140 Vdc, the field voltage is removed within 0.2 seconds.

After shutdown, reset the regulator by decreasing voltage below 6 Vac either by stopping the prime mover or interrupting the regulator input with a reset switch for 2 seconds or more.

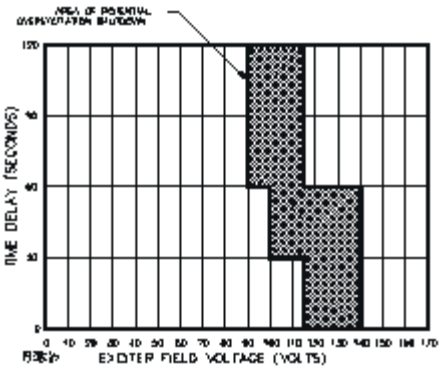

Typical Time Delay Characteristic Curves

VOLTAGE ADJUST RHEOSTAT

Screwdriver adjustable potentiometer adjusts generator output voltage. Adjustment CW increases voltage.

When using remote voltage adjust rheostat (VAR), the VAR wire on the regulator should be cut and the rheostat connected to both ends. A 1 kohm and 1/2 watt resistance is adequate for most applications. See *Interconnection Diagrams.*

OPERATION

The following system operation procedures provide instructions for adjusting the VR63-4/UL Voltage Regulator.

CAUTION

Meggers and high potential test equipment must not be used. Incorrect use of such equipment could damage the semiconductors contained in the regulator.

PRELIMINARY SET-UP

To prevent damage to the regulator, complete the following steps before proceeding with system start-up.

a. Verify that the voltage regulator specification conforms with the generator system requirements.

b. Ensure that the regulator is correctly connected to the generator. See Interconnection Diagram.

c. Install fuses per *FUSES* paragraph.

d. Set the regulator VAR fully CCW and the remoteVAR (if used) to centered.

SYSTEM START-UP

a. Start the prime mover and bring up to rated speed. Voltage should buildup. If a minimum residual of 6 Vac is not present, perform field flashing.

b. Slowly adjust **VAR** CW until voltage reaches nominal value. If used, adjust remote voltage adjust to set generator output to exact value desired.

OPERATIONAL TEST

a. Connect the test setup as shown in *Operational Test.* Do not apply power. Ensure that light bulbs are rated for 120 V and less than 100 W.

b. Adjust regulator VAR and/or remote VAR to maximum CCW.

c. Apply 240V, 60 Hz power to regulator.

d. Slowly adjust the regulator VAR control CW.

RESULT:

1) Before minimum brilliance is reached, the light bulb should attain maximum brilliance to signify the regulating point.

2) At the regulating point, a small change in the VAR should turn the light bulb on or off.

FIELD FLASHING

When the regulator is operated with the generator for the first time, the polarity of residual magnetism may not correct or the magnitude not enough. If the generator does not build-up after startup, shut down the prime mover and proceed with the following steps:

a. With the prime mover at rest, apply a dc source (not grounded) of not more than 12V, to terminals **F+**(positive) and **F-** (negative) in series with a limiting resistor of 3-5 ohms.

b. Allow approximately 3 seconds before removing the dc source.

c. Start prime mover and measure voltage at regulator leads **3** and **4**. If voltage is greater than 6 volts, voltage build-up should be successful. Repeat field flashing procedure if less than 6 V residual is measured.

d. If repeating steps 1 and 2 does not result in generator voltage build-up, replace the voltage regulator.

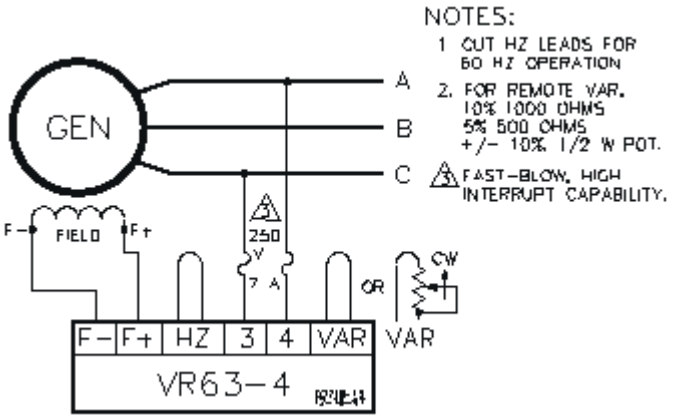

Interconnection Diagram, 208-240 V Nominal

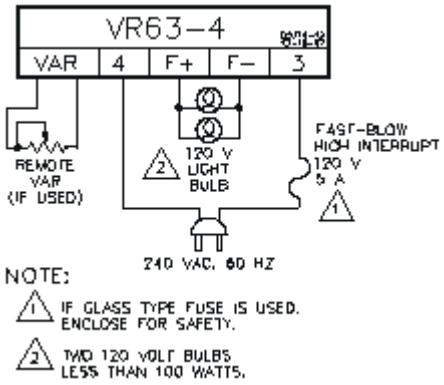

Operational Test

INSTRUCTION MANUAL
FOR

VOLTAGE REGULATOR
Model: VR485-100-P
Part Number: 9 2482 00 108

Basler Electric

Publication Number: 9 2482 00 992
Revision: A 03/98

INTRODUCTION

This manual provides information concerning the operation and installation of a VR485-100-P Voltage Regulator. To accomplish this, the following is provided.

- Specifications
- Installation
- Operation
- Maintenance

WARNING

TO AVOID PERSONAL INJURY OR EQUIPMENT DAMAGE, ONLY QUALIFIED PERSONNEL SHOULD PERFORM THE PROCEDURES PRESENTED IN THIS MANUAL.

First Printing: November 1991

Printed in USA

© 1998 Basler Electric Co., Highland, IL 62249

March 1998

CONFIDENTIAL INFORMATION

OF BASLER ELECTRIC COMPANY, HIGHLAND, IL. IT IS LOANED FOR CONFIDENTIAL USE, SUBJECT TO RETURN ON REQUEST, AND WITH THE MUTUAL UNDERSTANDING THAT IT WILL NOT BE USED IN ANY MANNER DETRIMENTAL TO THE INTEREST OF BASLER ELECTRIC COMPANY.

It is not the intention of this manual to cover all details and variations in equipment, nor does this manual provide data for every possible contingency regarding installation or operation. The availability and design of all features and options are subject to modification without notice. Should further information be required, contact Basler Electric Company, Highland, Illinois.

BASLER ELECTRIC
ROUTE 143, BOX 269
HIGHLAND, IL 62249 USA
http://www.basler.com, info@basler.com
PHONE 618-654-2341 **FAX 618-654-2351**

CONTENTS

SECTION 1 GENERAL INFORMATION 1-1

DESCRIPTION 1-1
SPECIFICATIONS 1-1
ACCESSORY ITEMS 1-2
Power Isolation Transformer 1-2
Paralleling CT 1-2

SECTION 2 INSTALLATION 2-1

MOUNTING 2-1
INTERCONNECTION 2-1

SECTION 3 OPERATION 3-1

GENERAL 3-1
PRELIMINARY SET-UP 3-1
OPERATION AT REDUCED SPEEDS 3-1
SYSTEM START-UP 3-1
ADJUSTMENTS 3-1
Field Flashing 3-1
Underfrequency Threshold Adjustment 3-2
Stability Adjustment 3-2
Voltage Adjustment 3-2
Droop Adjustment 3-2

SECTION 4 MAINTENANCE 4-1

PREVENTIVE MAINTENANCE 4-1
TROUBLESHOOTING 4-1

SECTION 5 MANUAL CHANGE INFORMATION 5-1

CHANGES 5-1

SECTION 1 • GENERAL INFORMATION

GENERAL DESCRIPTION

The VR485-100-P Voltage Regulator controls the output voltage of 400 Hz brushless generators by supplying the required exciter field current. The VR485-100-P includes circuitry for paralleling, underfrequency limiting, and excitation current limiting.

SPECIFICATIONS

Refer to Table 1-1 for the electrical specifications and to Table 1-2 for the physical specifications of the VR485-100-P Voltage Regulator.

Table 1-1. Electrical Specifications

Dc Output Power:	2.5 Adc at 63 Vdc (157.5 W) maximum continuous. 3.6 Adc at 90 Vdc (324 W) forcing one minute.
Exciter Field Dc Resistance:	25 ohms, minimum.
Ac Power Input:	320 Vac, center-tapped, 400 Hz (special transformer). 20 Vac, 400 Hz (special transformer).
Sensing Input:	208 Vrms ±10%, single phase, 400 Hz.
Sensing Burden:	2 VA.
Voltage Adjust Range:	187 - 229 Vac.
Regulation Accuracy:	Better than ±1.0% no load to full load.
Temperature Stability:	1.0% maximum for a 60°F change in ambient temperature.
Response Time:	Less than 1.5 cycles.
Frequency Compensation:	Approximately 0.66 V/Hz below 380 Hz.
Excitation Current Limit:	5 Adc.
Paralleling CT Input:	1 A ac at full load.
Paralleling CT Burden:	2 VA (Basler Part Number BE 23571-002).
Voltage Build-Up:	Provides a minimum of 6 Vdc to the exciter field for voltage build-up with as little as 10 Vac (residual) on the power transformer primary.
Power Dissipation:	40 Watts maximum.

Table 1-2. Physical Specifications

Operating Temperature:	-32°C (-26F) to +60°C (+140°F).
Storage Temperature:	-40°C (-40°F) to +85°C (+185°F).
Weight:	4.0 lb. (1.2 kg) Net.

ACCESSORY ITEMS

Power Isolation Transformer

A special power isolation transformer is required to operate the VR485-100-P. The transformer (Basler Part Number BE 25089-001) has a center-tapped, 320 Vac winding for the main Voltage Regulator exciter power and a 20 Vac winding for supplying low voltage power to the internal regulator circuitry.

Paralleling CT

A current transformer (Basler Part Number BE 23571-002) is required to supply line current information to the Paralleling circuit. The CT turns-ratio should be such that 1 A is supplied from the CT secondary when the generator is at full load. The CT should be rated for 2 VA minimum at 400 Hz.

SECTION 2 • INSTALLATION

MOUNTING

For optimum cooling of the regulator, it is recommended that the regulator be mounted vertically. Refer to the outline drawing, Figure 2-1.

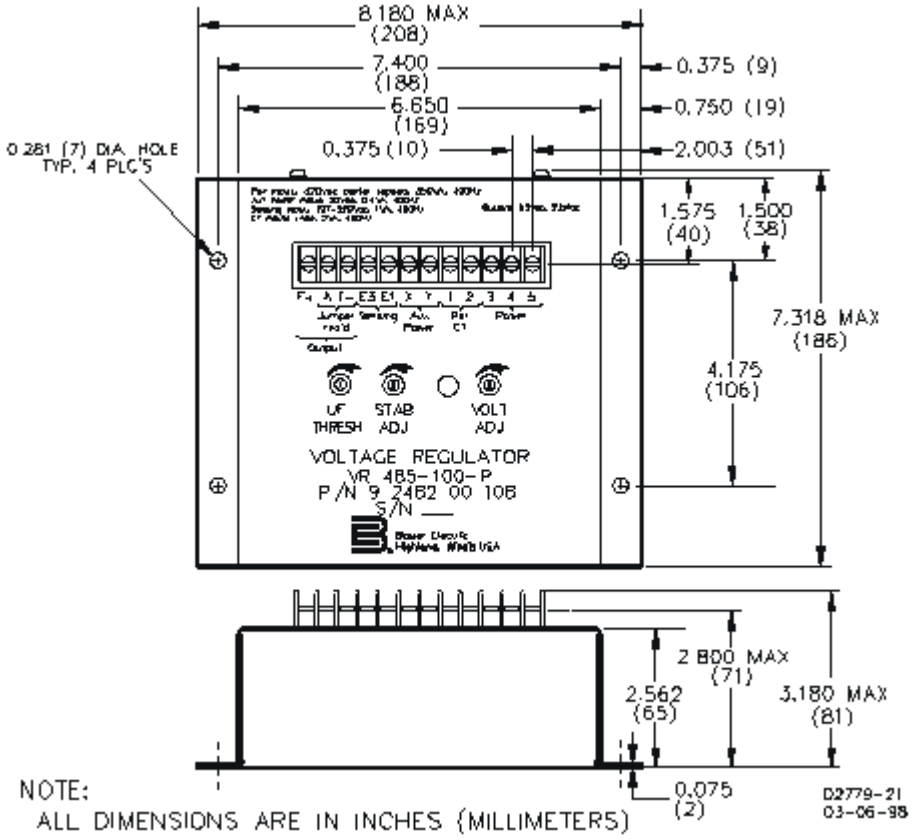

Figure 2-1. Outline Drawing

INTERCONNECTION

a. The voltage regulator interconnection is provided by Figure 2-2.

b. If an external voltage adjust rheostat is to be used, connect it between the generator Aϕ, and terminal E1 as shown in Figure 2-2. If an external voltage adjust rheostat is not to be used, connect terminal E1 directly to the generator Aϕ line.

c. Connect the exciter field terminals to F+ and F- while observing polarity. Be sure to connect terminal F- to terminal A as damage will result if these two terminals are not connected together.

d. A flashing source may be required (refer to *Field Flashing* in Section 3). If it is, connect it as shown in Figure 2-2.

e. Install fuses and a shutdown switch.

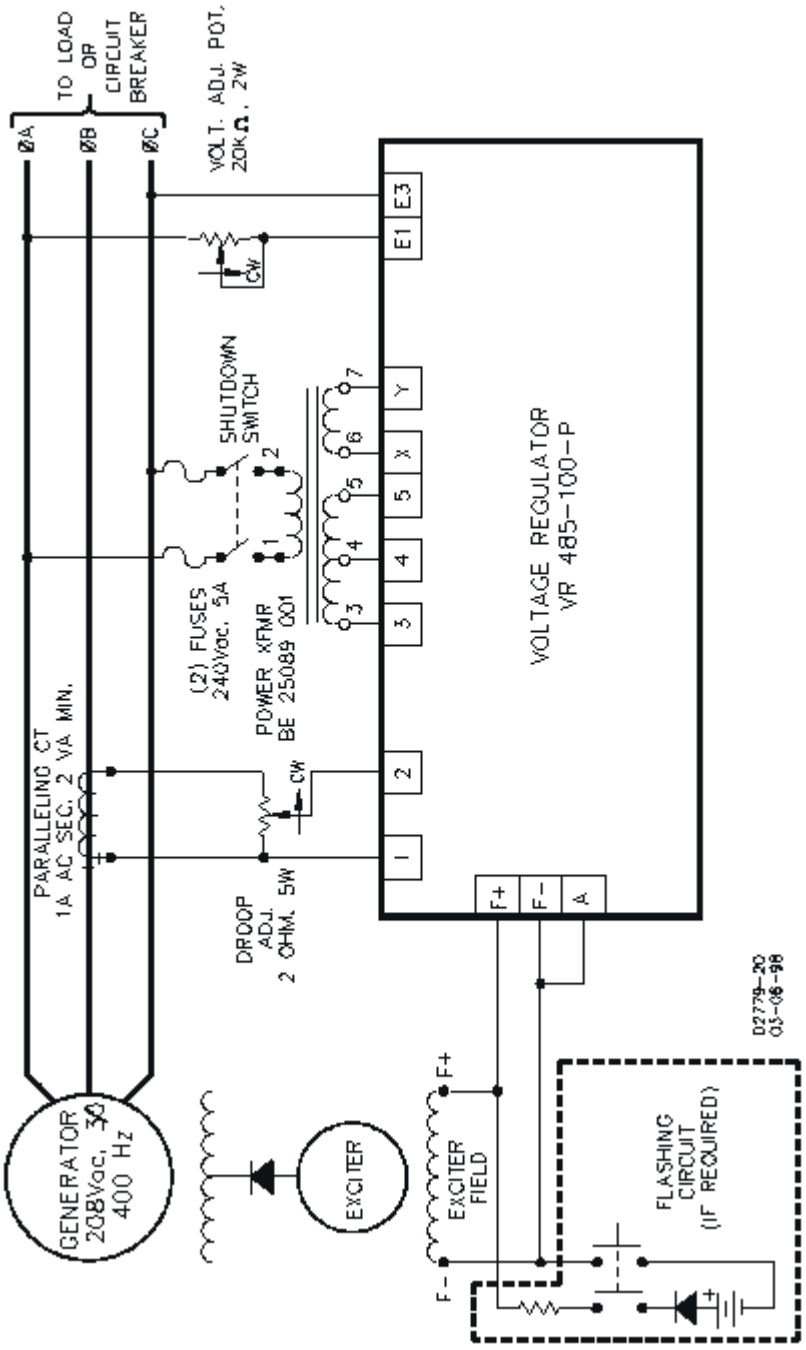

Figure 2-2. Interconnection Diagram

f. Connect the power transformer as shown in Figure 2-2. The power transformer primary (terminals 1 and 2) may be connected to either the generator output or a separate 208 Vac source. If a separate 208 Vac source is used, the requirement for a flashing source is eliminated.

g. Connect the Paralleling CT secondary to terminals 1 and 2.

SECTION 3 • OPERATION

GENERAL

The following system operation procedures provide instructions for adjusting the VR485-100-P voltage regulator. Symptoms resulting from a faulty regulator and certain generator system problems are included, together with suggested remedies.

Complete the following steps before proceeding with the system start-up.

CAUTION

Meggers and high potential test equipment must not be used. Incorrect use of such equipment could damage the semiconductors contained in the regulator.

PRELIMINARY SET-UP

a. Verify that the voltage regulator specifications conform with the generator system requirements.

b. Ensure the voltage regulator is correctly connected to the generator system.

OPERATION AT REDUCED SPEEDS

During periods of prime mover idling, use the excitation shutdown switch to remove power from the voltage regulator.

SYSTEM START-UP

a. Perform preliminary set-up as described previously.

NOTE

All voltage readings are to be taken with an average reading voltmeter.

b. Start prime mover and bring up to rated speed.

RESULT: Voltage should build up. If not, proceed to *Field Flashing*.

c. Slowly adjust the regulator **VAR** CW until the generator output voltage reaches the nominal value. If used, adjust the remote **VAR** to set the generator voltage to the exact value desired.

RESULT: Voltage should build up to rated value. If voltage does not build up to rated value, check generator for short or excessive load. If necessary, perform field flashing.

d. Check regulator under normal operating and loading conditions.

RESULT: Voltage regulation should be better than ±1.0% no-load to full-load. If regulation is not within this range:

1) Voltage reduction under load may be due to speed change from no load to full load, causing the frequency compensation (V/Hz) circuit to reduce voltage at lower frequencies.

2) Replace voltage regulator if the prime mover speed is not changing.

ADJUSTMENTS

Field Flashing

The VR485-100-P will provide at least 6 Vdc to the exciter field for voltage build-up if at least 10 Vac residual voltage is present at the Power Transformer primary. If 6 Vdc to the exciter field is not sufficient for voltage build-up, or if 10 Vac is not available at the Power Transformer primary, it may be necessary to

add a flashing circuit as shown in Figure 2-2. The flashing voltage source should be sufficient to cause the generator output to be between 50% and 75% of the nominal no-load voltage. Care should be taken to avoid applying excessive flashing voltage as damage may result. If the available dc voltage source is too high, a series limiting resistor is required.

Underfrequency Threshold Adjustment

The underfrequency threshold is factory preset at 380 Hz. If a different threshold is desired, perform the following procedure:

(1) Bring the prime mover/generator up to rated speed and voltage.

(2) Adjust the **UF THRESH** Adjustment fully counter-clockwise (CCW).

(3) Adjust the Prime Mover speed to the desired underfrequency threshold (corner frequency).

(4) Slowly adjust the **UF THRESH** Adjustment clockwise (CW) until the generator voltage just starts to decrease.

(5) Bring the Prime Mover speed up to rated speed. The voltage should return to nominal.

Stability Adjustment

If a stability setting is desired that provides the fastest possible voltage response with good generator stability, an oscilloscope or other voltage recording device should be used.

(1) Rotation of the **STAB ADJ** control clockwise (CW) will slow response time.

(2) Rotation of the **STAB ADJ** control counter-clockwise (CCW) will speed response time. If this control is rotated too far CCW, the generator voltage may oscillate (hunt).

(3) Rotate the **STAB ADJ** control CW just past the point where oscillation occurred.

Voltage Adjustment

(1) Adjustment of the generator output voltage may be accomplished by using either an external 20 kW potentiometer or the front panel **VOLT ADJ** control. With either potentiometer set near its center of rotation, the other potentiometer will provide a ±10% adjustment of the generator output voltage (nominal is 208 V).

(2) If the external control is not used, the 20 kW potentiometer may be replaced with a jumper between terminal E1 and the generator Aϕ line. However, this will lower the overall voltage adjust range of the front panel **VOLT ADJ** control.

(3) If a higher range of adjustment is required than the standard ±10%, the external 20 kW potentiometer may be replaced with a 10 kW, 1/2 W, fixed resistor connected from terminal E1 to the generator Aϕ line.

Droop Adjustment

With proper selection of the Paralleling CT Turns-Ratio to deliver 1 A secondary current at full-load, the Paralleling Circuit can be adjusted by means of an external droop resistor (refer to Figure 2-2) from 0% to 5% droop of nominal voltage. To set the droop, proceed as follows:

(1) Rotate the Droop potentiometer fully counter-clockwise (CCW).

(2) Start the Prime Mover/Generator and adjust for rated voltage.

(3) Apply full rated load at rated power factor to the generator.

(4) Slowly adjust the Droop potentiometer clockwise (CW) until the desired amount of droop is attained.

SECTION 4 • MAINTENANCE

PREVENTIVE MAINTENANCE

A periodic inspection of the unit should be made to ensure that it is kept clean and free from accumulations of dust and moisture. Ensure that all the wire connections to the voltage regulator are clean, secure, and properly insulated.

TROUBLESHOOTING

In case of failure/defective operation of the unit, the following table (Table 4-1) is provided to aid in the determination of the cause and the possible solution.

Table 4-1. Troubleshooting

Symptom	Possible Cause	Remedy
Voltage does not build up.	a. No voltage or incorrect voltage to power input at terminals **3**, **4** and **5**.	a. Flash field. b. Verify wiring. c. Check fuses. d. Check shutdown switch. e. Replace regulator.
	b. Overexcitation circuit is shutting off regulator.	Shutdown prime mover then restart. Watch for high voltage.
Voltage does not build up to rated value.	a. Internal or external voltage adjustments are improperly set.	Adjust front panel **VOLT** control and/or external voltage adjust rheostat.
	b. Prime mover speed to slow.	Verify speed and correct as necessary.
	c. Underfrequency roll-off point set too low.	Adjust **UF THRESH** front panel adjustment.
	d. Faulty regulator.	Replace regulator.
Voltage high and uncontrol-lable.	a. No sensing input.	Verify wiring.
	b. Faulty regulator.	Replace regulator.
Generator response too slow or hunting.	a. Improper front panel **STAB** adjustment.	Re-adjust front panel **STAB** adjustment.
	b. Faulty regulator.	Replace regulator.
Poor regulation.	a. Field requirements not matched to regulator capa-bility or regulator output rating too low for generator requirements.	Verify specifications.
	b. Underfrequency set too high.	Check underfrequency ad-justment.
	c. Low prime mover speed.	Verify prime mover speed.

SECTION 5 • MANUAL CHANGE INFORMATION

CHANGES

Substantive changes in this manual to date are summarized in Table 5-1.

Table 5-1. Summary of Changes

Revision	Summary of Changes	ECA No.	Date
A	Added “Basler Part Number BE 23571-002” reference to the CT in Table 1-1, *Paralleling CT Burden*, and on page 1-2 in *Paralleling CT* paragraph. Changed the format of the manual. Added Section 5 • Manual Change Information.	16637	03/98

Manual Electric Start Economy Panel*

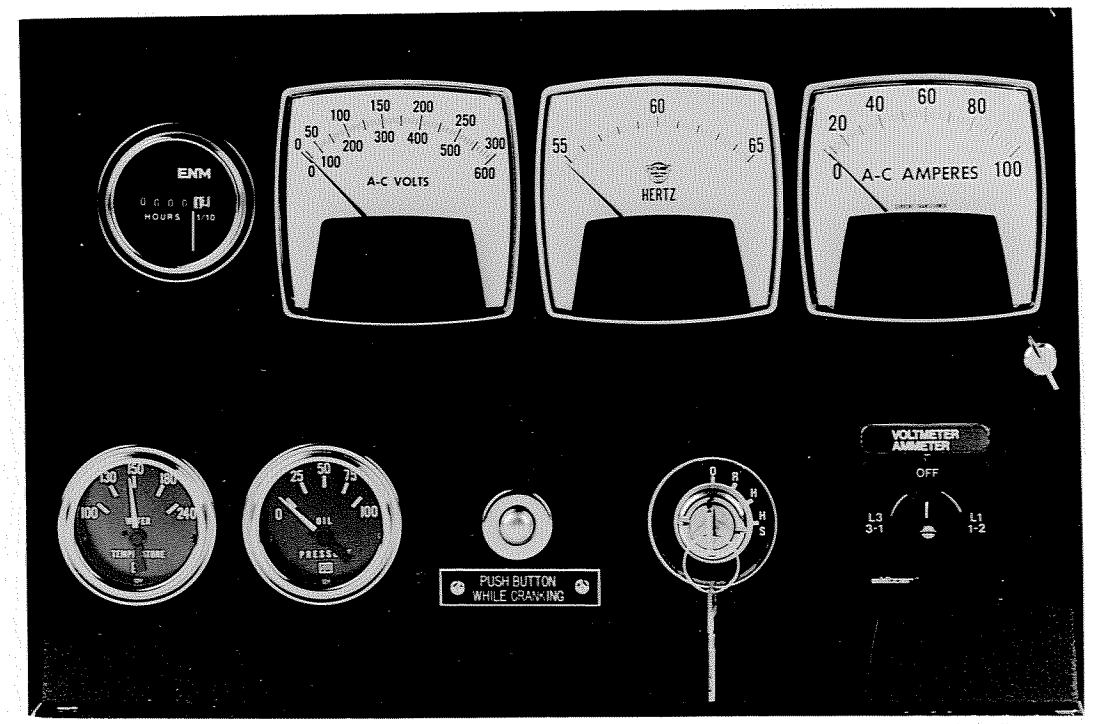

STANDARD EQUIPMENT

Voltmeter - 3½", 2% Accuracy
Ammeter - 3½", 2% Accuracy
Frequency Meter - 3½", 55-65 Hz, Dial Type
Combination VM/AM Selector
4 Position 3 phase
Vibration / Shock Mounts (4)

Engine Control - 2 engine safety shutdowns;
Low oil pressure and high engine temperature
Key ignition switch with start pushbutton.
Engine Gauges:
Temperature, 2" Oil Pressure, 2"
Running Time Meter, DC, 5 digits 2"

NOTE: Automatic engine control (KASSEC) not available with this panel
*Available for 25kW through 200kW units only

The Katolight Standard 40 Series Economy Panel is a complete package, ready for installation. The panels have been designed and tested to insure a reliable quality product, a Katolight tradition. When ordering, the following information must be provided to properly size the metering and DC control voltage for your application.

Generator: KW - Voltage - Frequency - Phase - Wire
Engine: Make - Model No. - Battery Voltage

Form ECP4/195

CONTROL PANEL DIMENSIONS

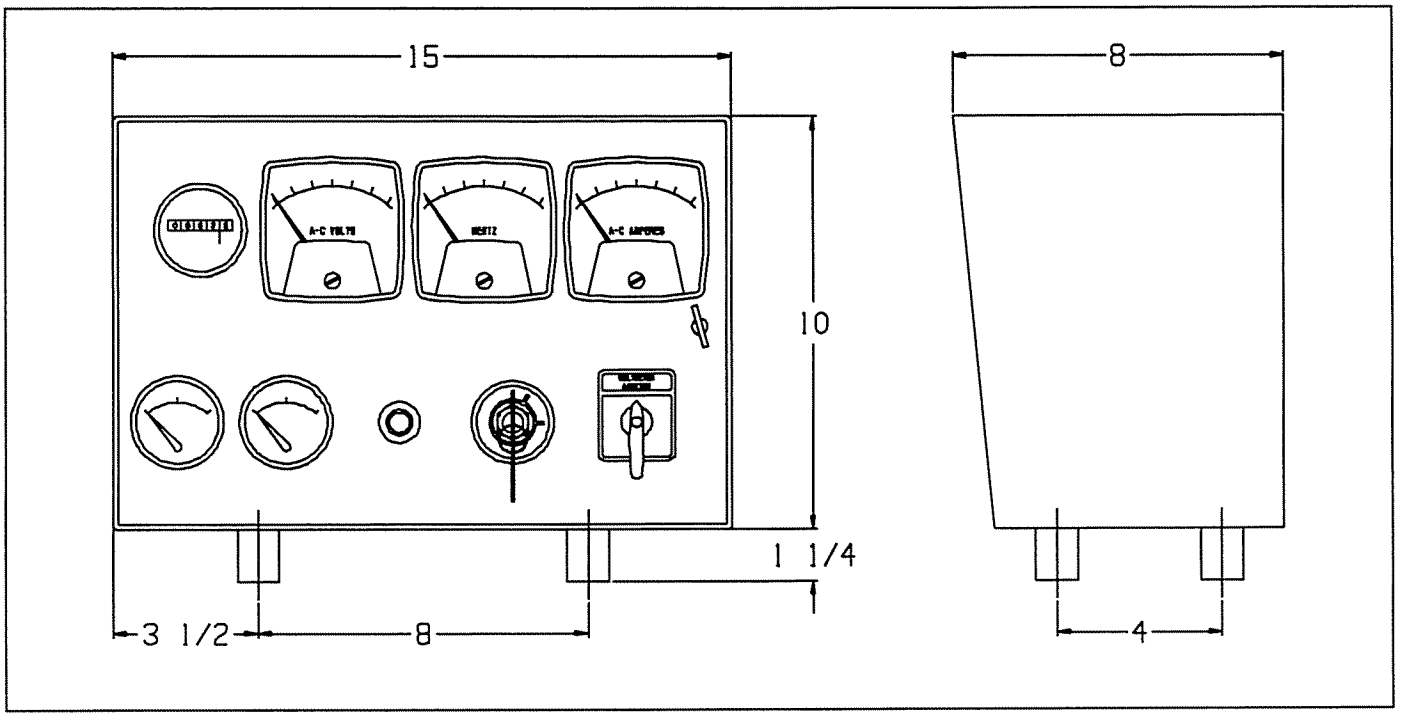

Katolight will custom-built control panels for applications requiring features not found in the Standard Control Panel. For more information consult the brochure, "Katolight Engine Generator Set Controls," (Form KLCB-779) in the Custom Built Control Panel Section of this catalog, or contact Katolight Corporation.

Materials and Specifications May Change Without Notice.

KATOLIGHT CORPORATION
3201 Third Avenue P.O. Box 3229 Mankato, Minnesota 56002-3229
Phone: (507) 625-7973 FAX: (507) 625-2968

Printed in U.S.A.

Standard 40 Series Control Panel

KATOLIGHT CORPORATION

HIGHLIGHTS

- Four light engine control package
- Three analog meters
- Cyclic cranking and an adjustable cranking timer



STANDARD FEATURES

- Four engine failure lights and five engine shutdowns: high coolant temperature, engine overspeed, engine overcrank, low oil pressure, low coolant level
- Voltmeter: 3 1/2”, 2% accuracy
- Ammeter: 3 1/2”, 2% accuracy
- Frequency meter: 3 1/2”, 55-65 Hz dial type
- Combination voltmeter/ammeter selector switch 4 position
- KASSEC automatic start engine control
- 3 position mode switch (auto-off-manual)
- Approximately 30 lbs.
- Complete package, ready for installation

OPTIONAL FEATURES

- Auxiliary relay for dry contacts (1 max.)

Standard 40 Series Control Panel

KATOLIGHT CORPORATION

DIMENSIONS

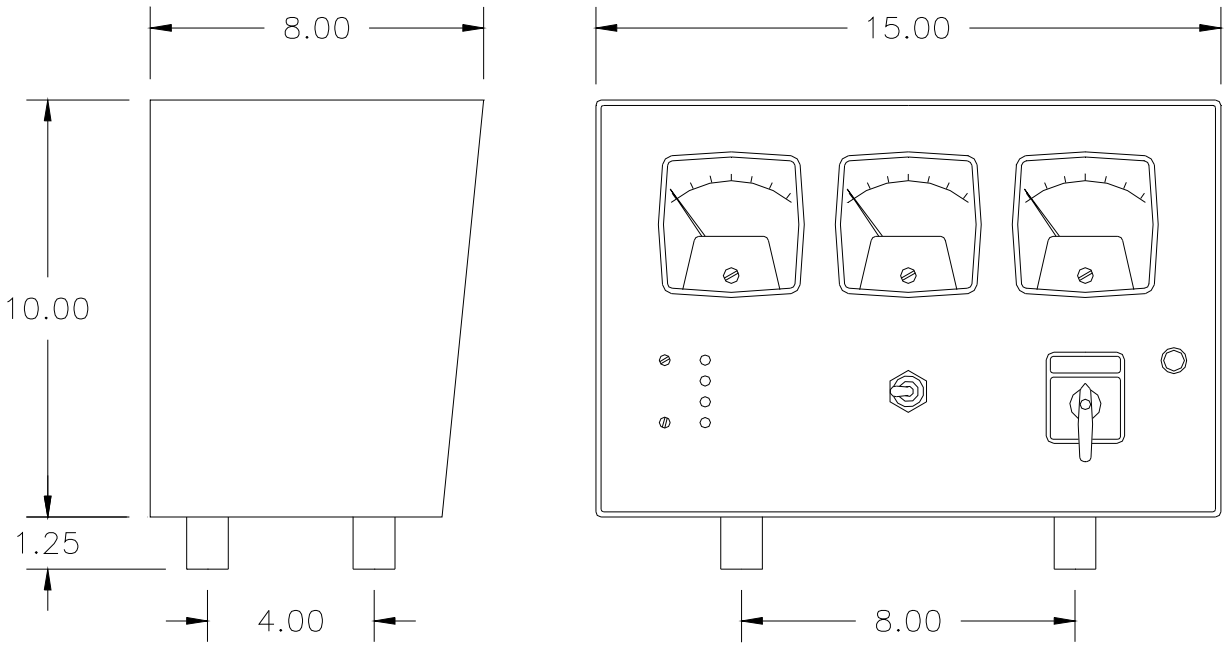

DIAGRAM

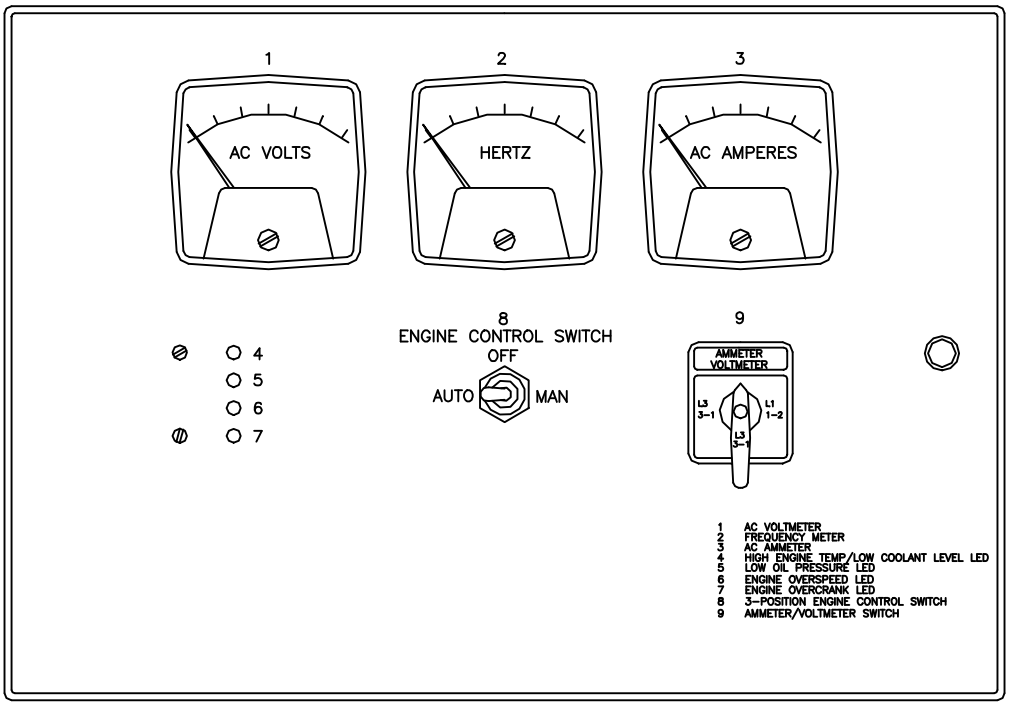

For support or information, call us at 800-325-5450 or visit us at www.katolight.com

Materials and specifications subject to change without notice.
© Katolight Corporation. 100 Power Drive, Mankato, MN 56001

Standard 45 Series Control Panel

KATOLIGHT CORPORATION

HIGHLIGHTS

- Four light engine control package
- Three analog meters
- Four engine monitoring gauges
- Cyclic cranking and an adjustable cranking timer



STANDARD FEATURES

- Four engine failure lights and five engine shutdowns: high coolant temperature, engine overspeed, engine overcrank, low oil pressure, low coolant level
- Voltmeter: 3 1/2”, 2% accuracy
- Ammeter: 3 1/2”, 2% accuracy
- Frequency meter: 3 1/2”, 55-65 Hz dial type
- Combination voltmeter/ammeter selector switch 4 position
- KASSEC automatic start engine control (12 or 24 volt DC)
- Battery charging DC voltmeter: 2”
- Engine coolant temperature gauge: 2”
- Engine oil pressure gauge: 2”
- Running time meter: 2”, 5 digits
- 3 position mode switch (auto-off-manual)
- Approximately 30 lbs.
- Complete package, ready for installation

OPTIONAL FEATURES

- Emergency stop button
- NEMA 12 enclosure adder
- Alarm buzzer with silencing switch
- Auxiliary relay for dry contacts (2 max.)
- Additional engine control lights (2 max.)
  - Low water level shutdown
  - Low battery voltage pre-alarm
  - Charger malfunction pre-alarm
  - Low oil pressure pre-alarm
  - EPS supplying load
  - High engine temperature pre-alarm
  - Low fuel (add switch to fuel tank) pre-alarm
  - Unit not in auto
  - Low coolant temperature pre-alarm

Standard 45 Series Control Panel

KATOLIGHT CORPORATION

DIMENSIONS

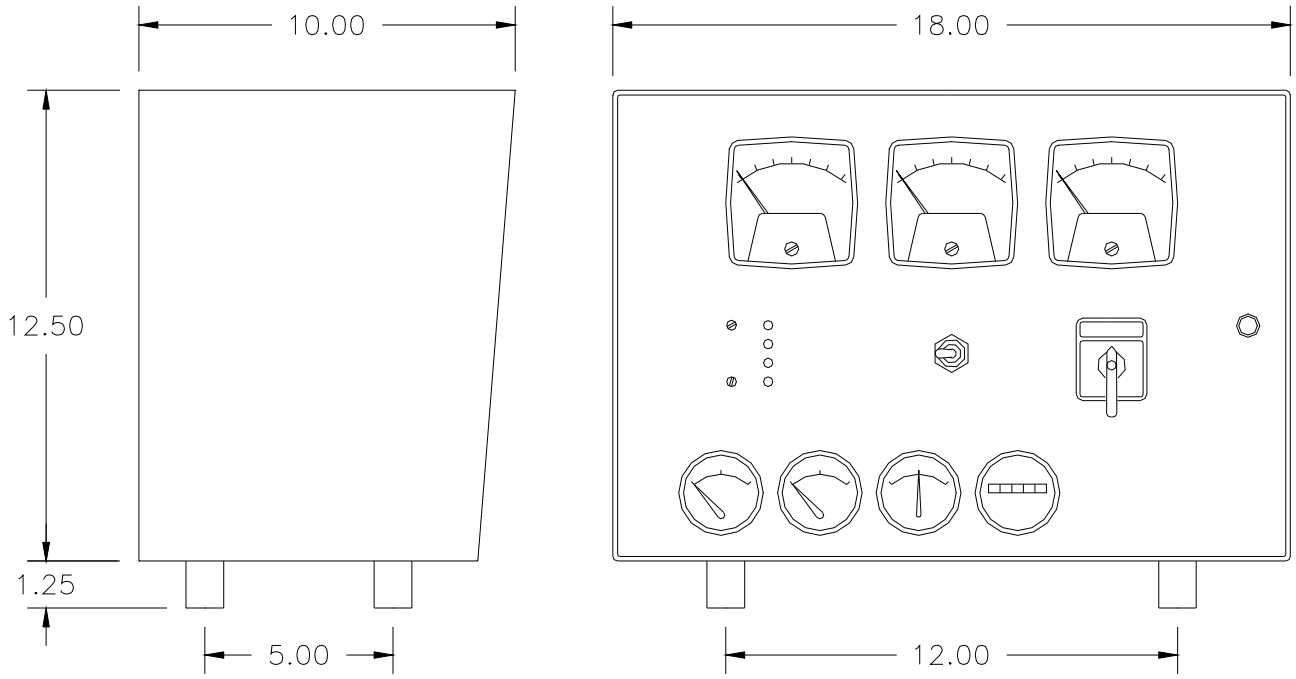

DIAGRAM

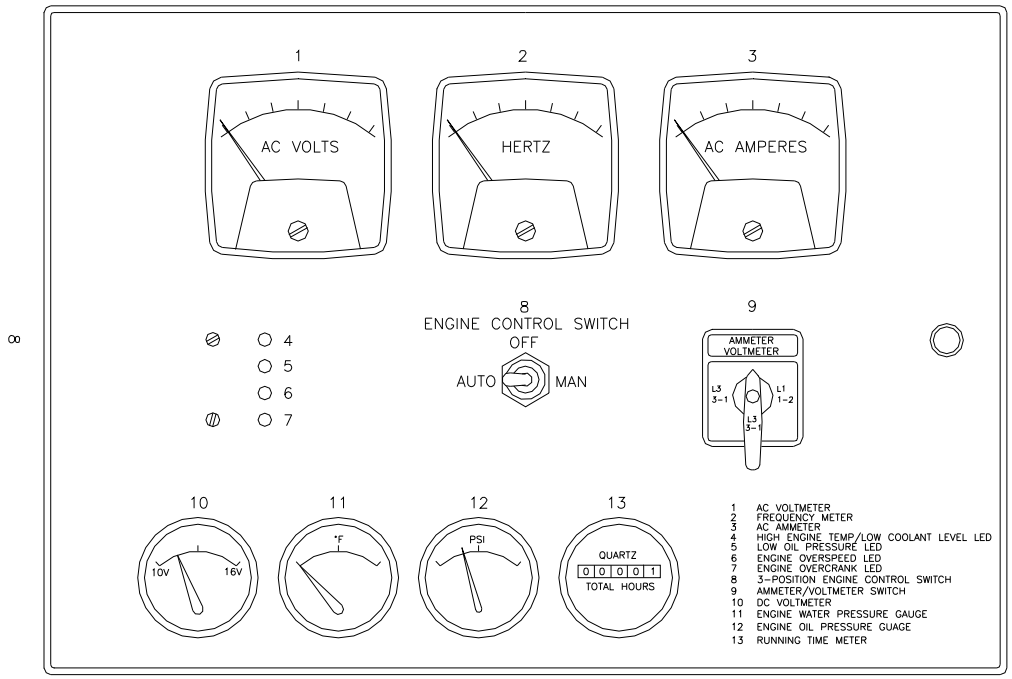

For support or information, call us at 800-325-5450 or visit us at www.katolight.com

Materials and specifications subject to change without notice.
© Katolight Corporation. 100 Power Drive, Mankato, MN 56001

Standard 50 Series Control Panel

KATOLIGHT CORPORATION

HIGHLIGHTS

- 12 light engine control package
- NFPA-110 compliant
- Option to add four additional lights
- Two hooded panel lights with on/off switch
- Cyclic cranking and an adjustable cranking timer



STANDARD FEATURES

- 12 engine failure lights and five engine shutdowns: high coolant temperature, engine overspeed, engine overcrank, low oil pressure, low coolant level, low battery voltage pre-alarm, charger malfunction pre-alarm, low oil pressure pre-alarm, EPS supplying load, high engine temperature pre-alarm, low fuel (add switch to fuel tank) pre-alarm, unit not in auto, low coolant temperature pre-alarm
- Voltmeter: 3 1/2”, 2% accuracy
- Ammeter: 3 1/2”, 2% accuracy
- Frequency meter: 3 1/2”, 55-65 Hz dial type
- Combination voltmeter/ammeter selector switch 4 position
- KASSEC automatic start engine control (12 or 24 volt DC)
- Battery charging DC voltmeter: 2”
- Engine coolant temperature gauge: 2”
- Engine oil pressure gauge: 2”
- Running time meter: 2”, 5 digits
- 3 position mode switch (auto-off-manual)
- Approximately 30 lbs.
- Complete package, ready for installation

OPTIONAL FEATURES

- Emergency stop button OR additional space for one 2” gauge
- NEMA 12 enclosure adder
- Auxiliary relay for dry contacts (2 max.)
- Additional engine control lights (4 max.)
  - Low water level shutdown
- Alarm buzzer with silencing switch

Standard 50 Series Control Panel

DIMENSIONS

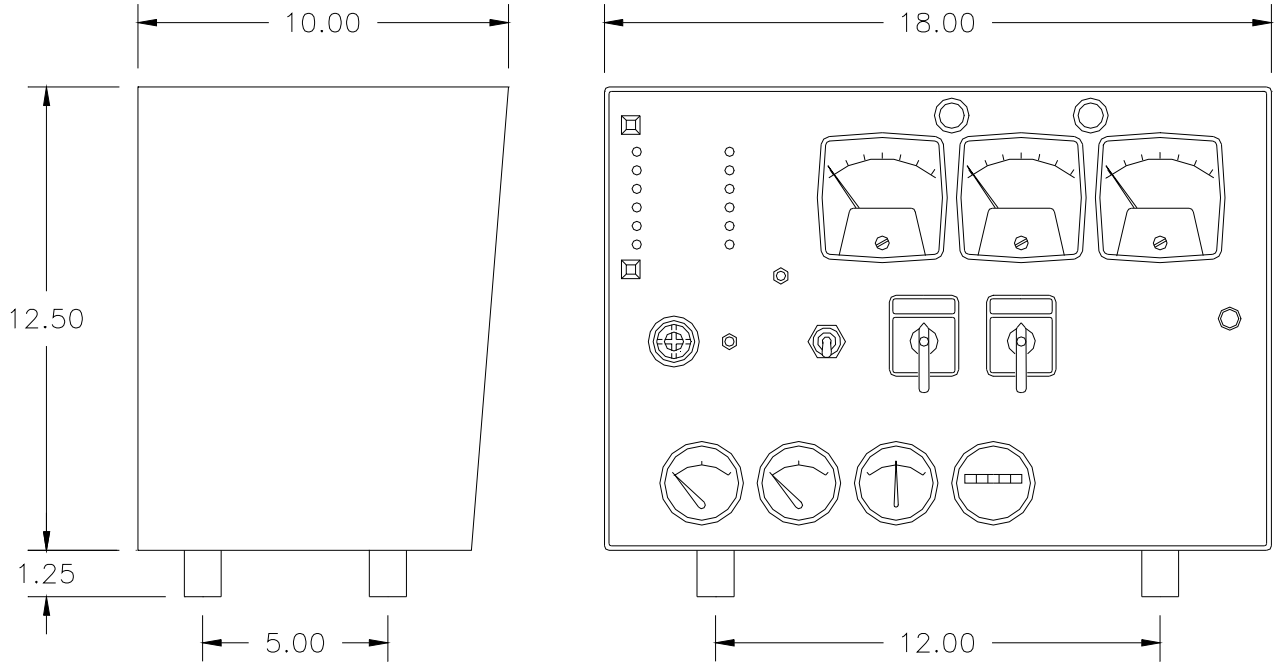

DIAGRAM

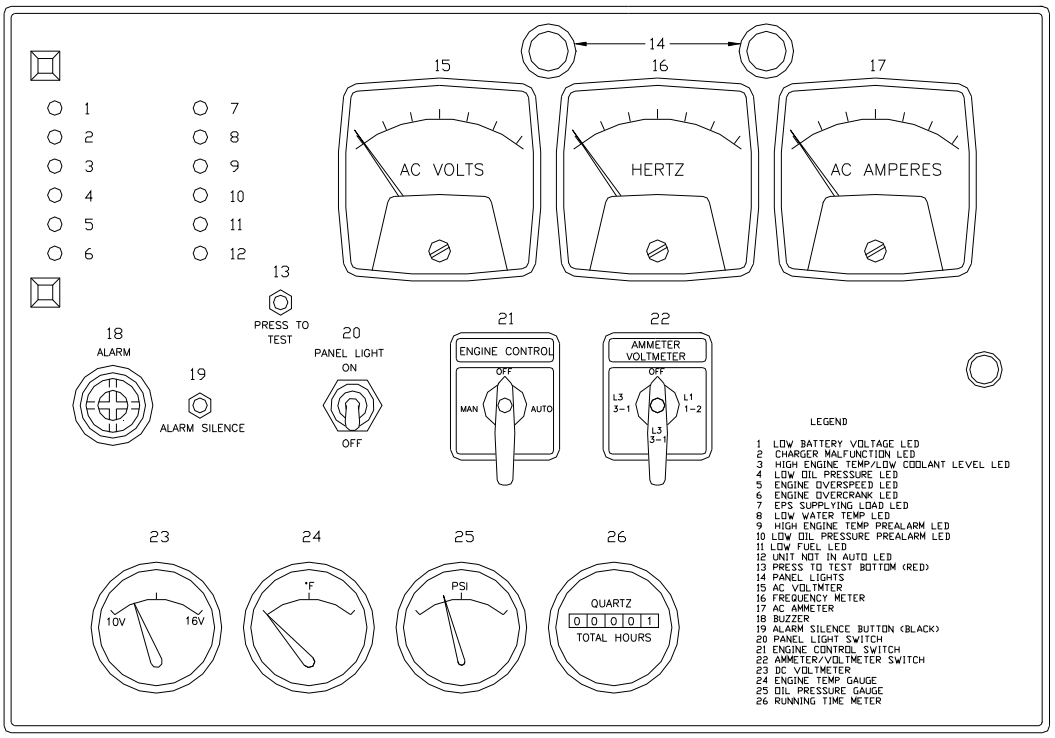

For support or information, call us at 800-325-5450 or visit us at www.katolight.com

Materials and specifications subject to change without notice.
© Katolight Corporation. 100 Power Drive, Mankato, MN 56001

Standard 60 Series Control Panel

KATOLIGHT CORPORATION

HIGHLIGHTS

- 12 light engine control package
- NFPA-110 compliant
- Option to add four additional lights
- Two hooded panel lights with on/off switch
- Cyclic cranking and an adjustable cranking timer
- Additional customizations available

STANDARD FEATURES

- 12 engine failure lights and five engine shutdowns: high coolant temperature, engine overspeed, engine overcrank, low oil pressure, low coolant level, low battery voltage pre-alarm, charger malfunction pre-alarm, low oil pressure pre-alarm, EPS supplying load, high engine temperature pre-alarm, low fuel (add switch to fuel tank) pre-alarm, unit not in auto, low coolant temperature pre-alarm
- Voltmeter: 3 1/2”, 2% accuracy
- Ammeter: 3 1/2”, 2% accuracy
- Frequency meter: 3 1/2”, 55-65 Hz dial type
- Combination voltmeter/ammeter selector switch 4 position
- KASSEC automatic start engine control (12 or 24 volt DC)
- Battery charging DC voltmeter: 2”
- Engine coolant temperature gauge: 2”
- Engine oil pressure gauge: 2”
- Running time meter: 2”, 5 digits
- 3 position mode switch (auto-off-manual)
- Approximately 30 lbs.
- Complete package, ready for installation

OPTIONAL FEATURES

- Emergency stop button OR additional space for one 2” gauge 3 1/2” meter
- NEMA 12 enclosure adder
- Auxiliary relay for dry contacts (4 max.)
- Additional engine control lights (4 max.)
  - Low water level shutdown
- Alarm buzzer with silencing switch

Standard 60 Series Control Panel

DIMENSIONS

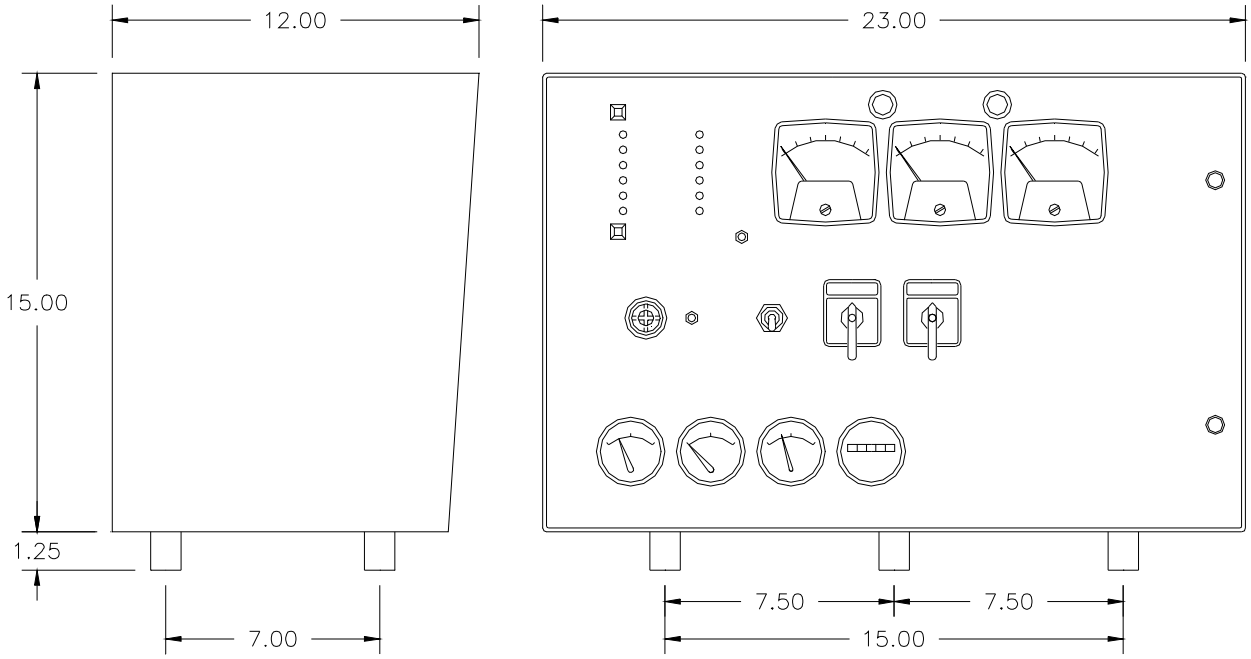

DIAGRAM

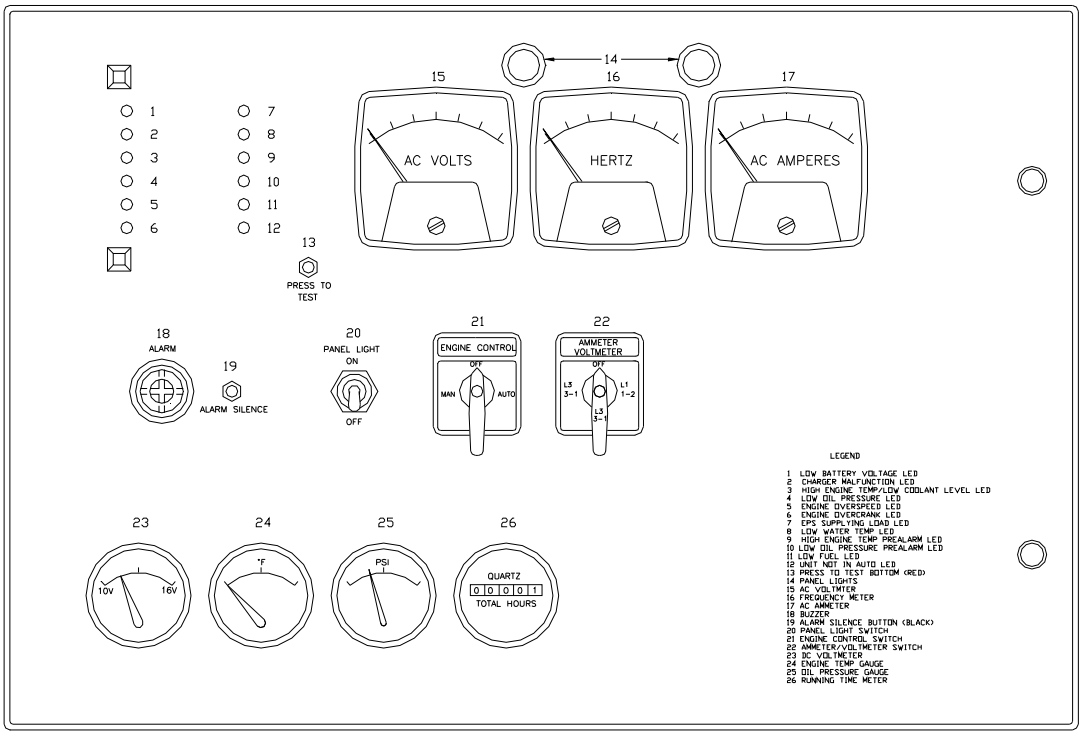

For support or information, call us at 800-325-5450 or visit us at www.katolight.com

Materials and specifications subject to change without notice.
© Katolight Corporation. 100 Power Drive, Mankato, MN 56001

Custom 80 Series Control Panel

KATOLIGHT CORPORATION

HIGHLIGHTS

- 12 light engine control package
- NFPA-110 compliant
- Option to add four additional lights
- Two hooded panel lights with on/off switch
- Cyclic cranking and an adjustable cranking timer
- Additional customizations available

STANDARD FEATURES

- 12 engine failure lights and five engine shutdowns: high coolant temperature, engine overspeed, engine overcrank, low oil pressure, low coolant level, low battery voltage pre-alarm, charger malfunction pre-alarm, low oil pressure pre-alarm, EPS supplying load, high engine temperature pre-alarm, low fuel (add switch to fuel tank) pre-alarm, unit not in auto, low coolant temperature pre-alarm
- Voltmeter: 3 1/2”, 2% accuracy
- Ammeter: 3 1/2”, 2% accuracy
- Frequency meter: 3 1/2”, 55-65 Hz dial type
- Combination voltmeter/ammeter selector switch 4 position
- KASSEC automatic start engine control (12 or 24 volt DC)
- Battery charging DC voltmeter: 2”
- Engine coolant temperature gauge: 2”
- Engine oil pressure gauge: 2”
- Running time meter: 2”, 5 digits
- 3 position mode switch (auto-off-manual)
- Approximately 30 lbs.
- Complete package, ready for installation

OPTIONAL FEATURES

- Emergency stop button OR additional space for one 2” gauge 3 1/2” meter
- NEMA 12 enclosure adder
- Auxiliary relay for dry contacts (4 max.)
- Additional engine control lights (4 max.)
  - Low water level shutdown
- Alarm buzzer with silencing switch

Custom 80 Series Control Panel

KATOLIGHT CORPORATION

DIMENSIONS

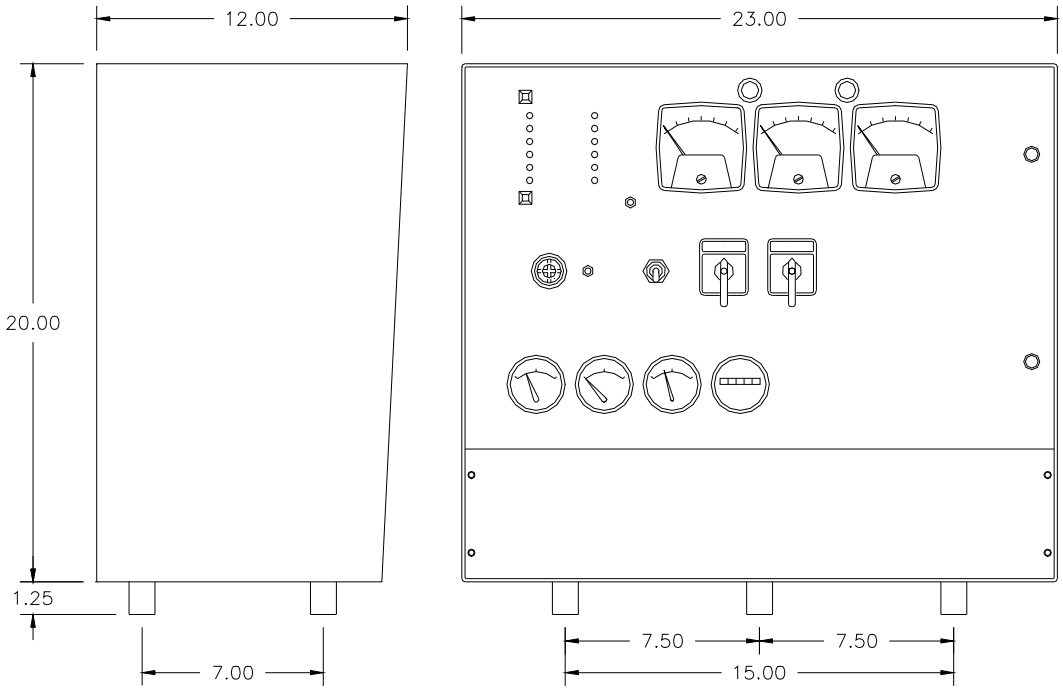

DIAGRAM

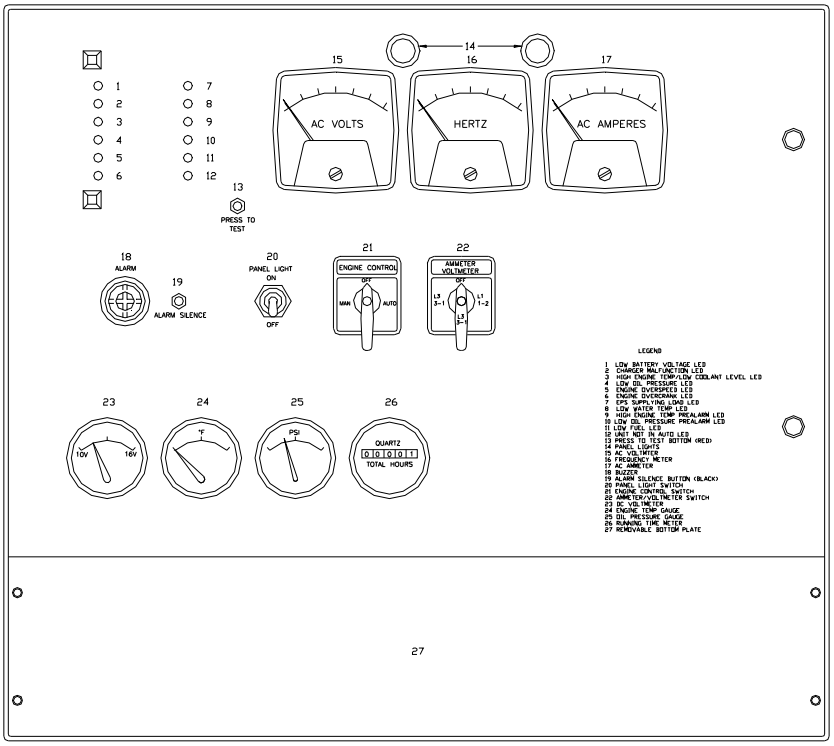

For support or information, call us at 800-325-5450 or visit us at www.katolight.com

Materials and specifications subject to change without notice.
© Katolight Corporation. 100 Power Drive, Mankato, MN 56001

DC VOLTAGE SENSING RELAY

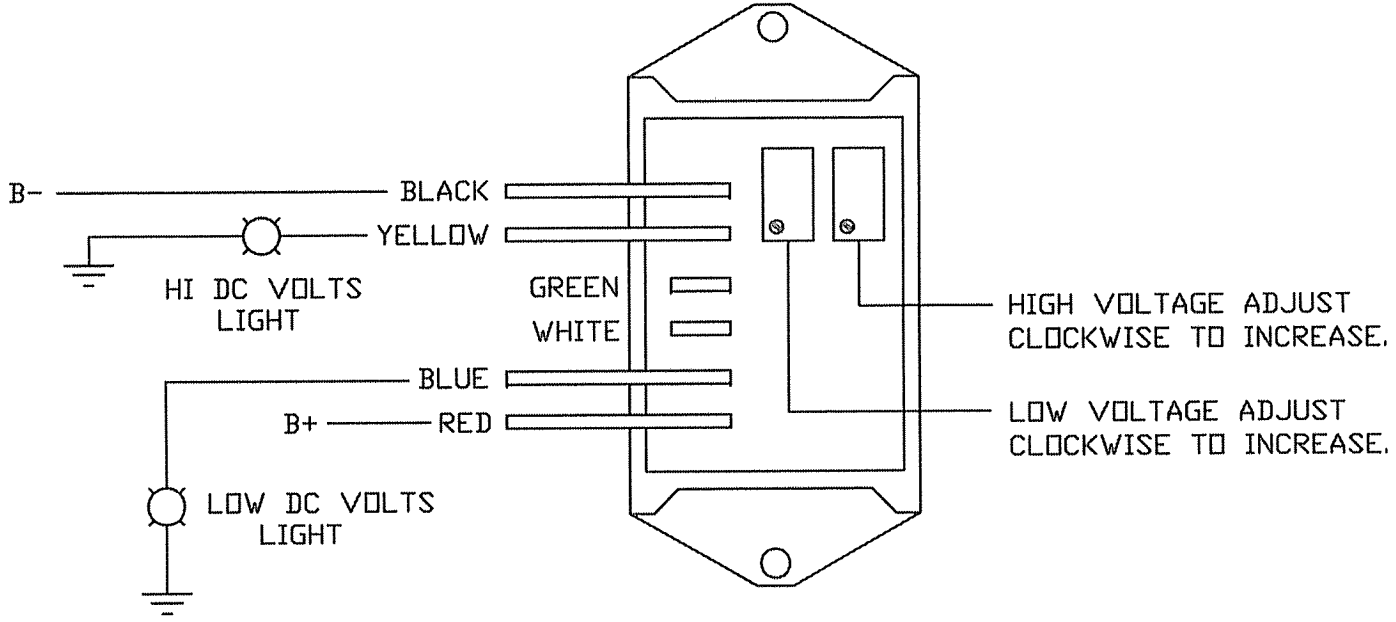

NOTE:

1. HIGH VOLTAGE RELAY SHOULD CLOSE AT 15 VDC FOR 12VDC SYSTEMS AND 30 VDC FOR 24VDC SYSTEMS
2. LOW VOLTAGE RELAY SHOULD CLOSE AT 10.3 VDC FOR 12VDC SYSTEMS AND 22.3 VDC FOR 24VDC SYSTEMS
3. WHITE JUMPER IS CUT FOR 12VDC OPERATION.
4. GREEN JUMPER IS CUT FOR 24VDC OPERATION.

REVISION:
1. REDRAWN ON COMPUTER 6-1-98 LJS
2. UPDATED PRINT 11-16-99 SKB

KATOLIGHT
MANKATO, MINNESOTA

DC VOLTAGE SENSING RELAY

SIZE	DATE	DWG NO
A	6-1-98	800-151

SCALE	PART NO	DWN BY	SHEET
NONE	35064	LJS	1 OF 1

Katolight Service - Master Repair Manual - Page 1675

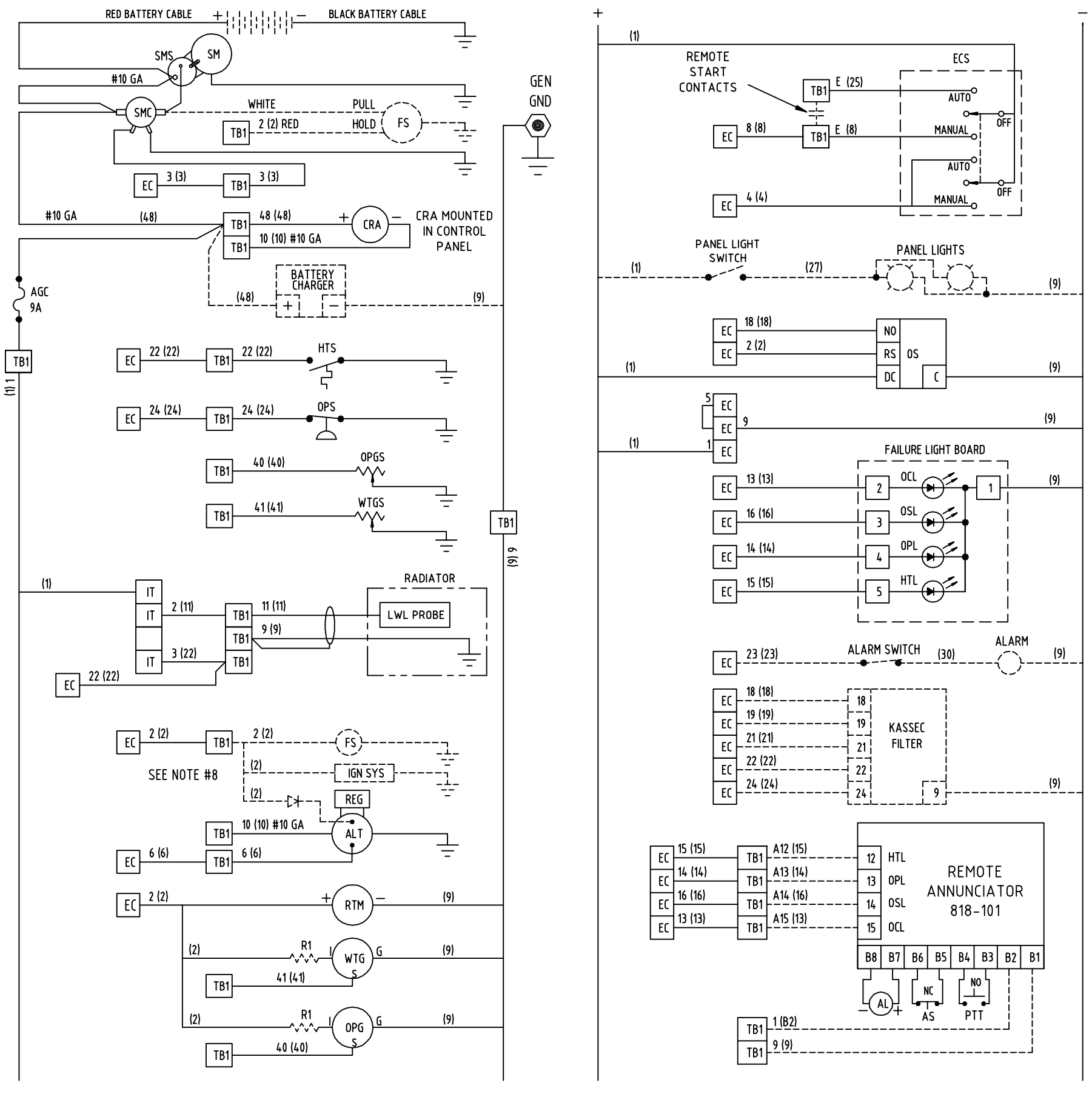

LEGEND

ALT	ALTERNATOR
CRA	CHARGE RATE AMMETER
EC	ENGINE CONTROL KASSEC
ECS	ENGINE CONTROL SWITCH
FS	FUEL SOLENOID
HTL	HIGH ENGINE TEMPERATURE LED
HTS	HIGH ENGINE TEMPERATURE SWITCH
IT	ISOLATION X-FORMER/LOW WATER LEVEL BRD
LWL	LOW WATER LEVEL PROBE
OCL	ENGINE OVERCRANK LED
OPG	OIL PRESSURE GAUGE
OPGS	OIL PRESSURE GAUGE SENDER
OPL	LOW OIL PRESSURE LED
OPS	LOW OIL PRESSURE SWITCH
OS	OVERSPEED SWITCH SM 124
OSL	ENGINE OVERSPEED LED
R1	200 OHM RESISTOR
RTM	RUNNING TIME METER
SM	STARTER MOTOR
SMC	STARTER MOTOR COIL PILOT RELAY
SMS	STARTER MOTOR SOLENOID
TB1	TERMINAL BOARD 1
WTG	WATER TEMPERATURE GAUGE
WTGS	WATER TEMPERATURE GAUGE SENDER

NOTE:
1. WIRE NUMBERS ARE IN PARENTHESIS.
2. ENGINE WIRING IS #16 GA UNLESS OTHERWISE SPECIFIED.
3. CONTROL PANEL WIRING IS #20 GA UNLESS OTHERWISE SPECIFIED.
4. ENGINE CONTROL SWITCH IS IN OFF POSITION.
5. R1 ONLY USED ON 24 V UNITS.
6. EC AND OS ARE AC AND DC DEVICES. SEE AC DIAGRAM.
7. SHORT DASHED LINES (------) INDICATE CUSTOMER CONNECTION OR OPTIONAL EQUIPMENT.
8. DIESEL UNITS CONNECT FS AND DIODE, NATURAL GAS OR LP UNITS CONNECT IGN SYS. CUSTOMER MUST CONNECT FS. THESE CONNECTIONS ARE TYPICAL BUT NOT ALWAYS USED.
9. ALL PERKINS UNITS USE KASSEC FILTER.

KATOLIGHT
MANKATO, MINNESOTA

DC LADDER DIAGRAM

SIZE	DATE	DWG NO	
B	4-13-99	819-B-8461	
DESCRIPTION	STD 45	DWN BY SL	SHEET 1 OF 1

Katolight Service - Master Repair Manual - Page 1677

PANEL DOOR

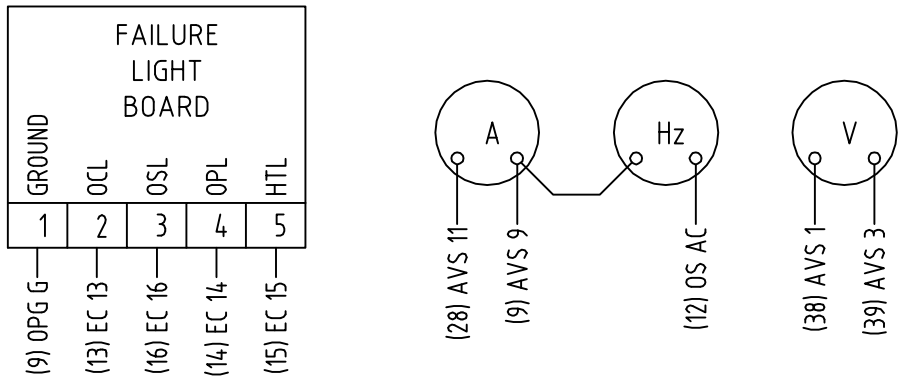

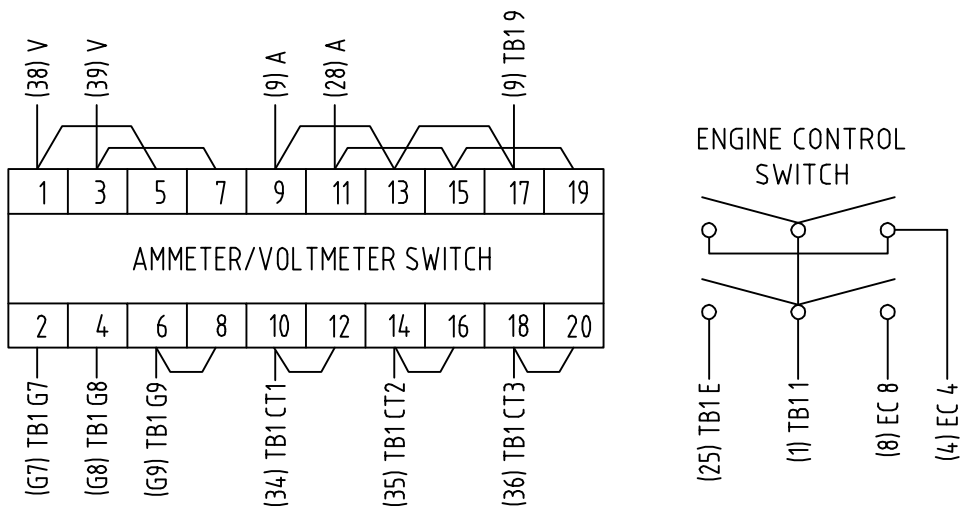

PANEL BACK

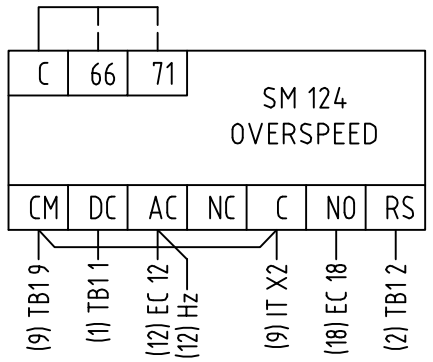

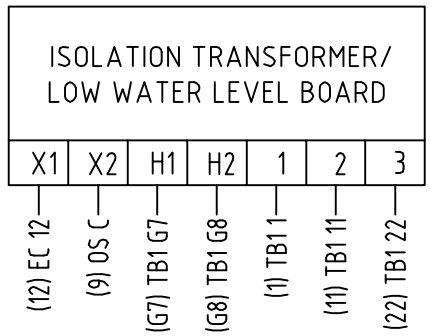

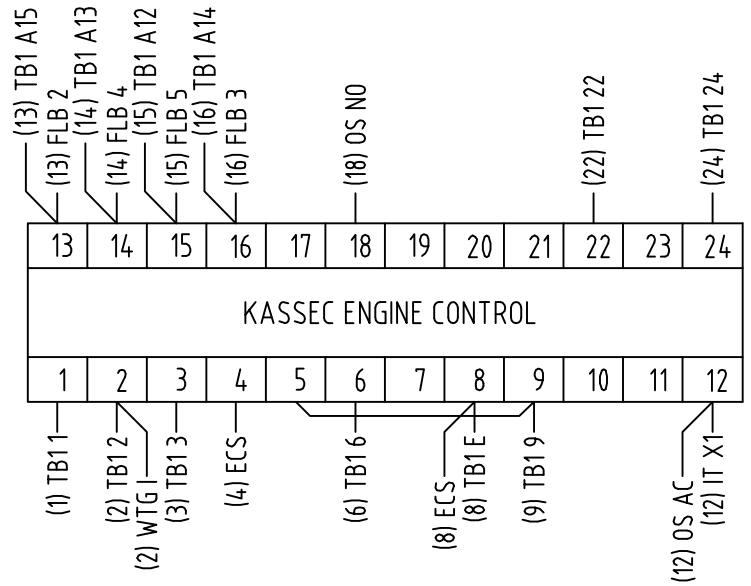

ENGINE GAUGES

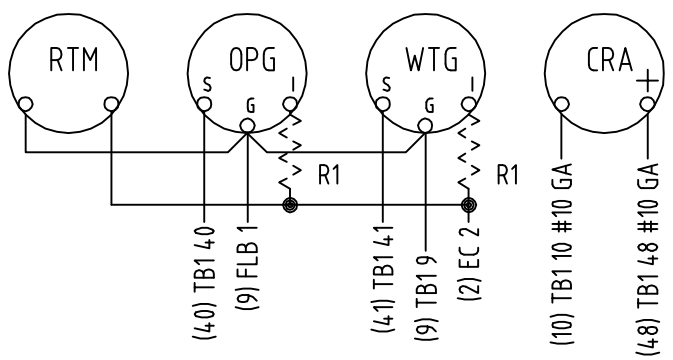

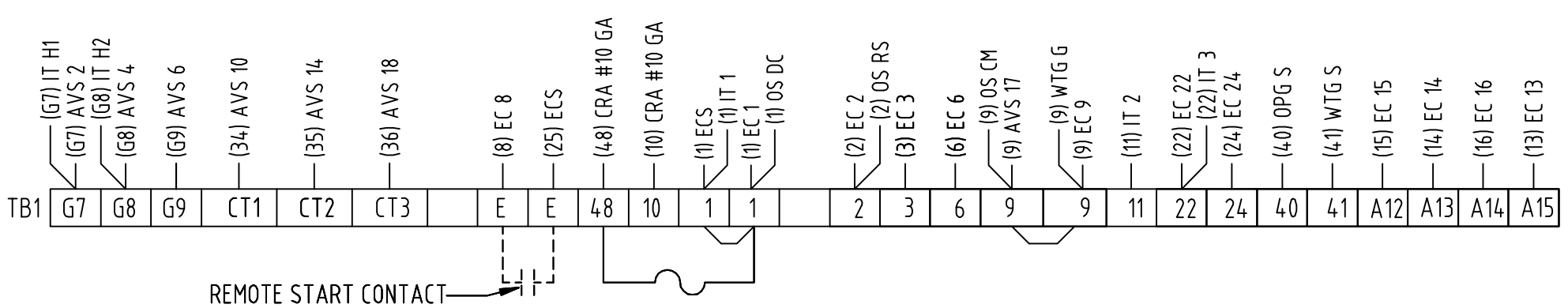

LEGEND

A	AMMETER
AVS	AMMETER/VOLTMETER SELECTOR SWITCH
CRA	CHARGE RATE AMMETER
EC	ENGINE CONTROL KASSEC
ECS	ENGINE CONTROL SWITCH
FLB	FAILURE LIGHT BOARD
HTL	HIGH ENGINE TEMPERATURE LED
HZ	FREQUENCY METER
IT	ISOLATION X-FORMER/LOW WATER LEVEL BRD
OCL	ENGINE OVERCRANK LED
OPG	OIL PRESSURE GAUGE
OPL	LOW OIL PRESSURE LED
OS	OVERSPEED SWITCH SM 124
OSL	ENGINE OVERSPEED LED
R1	200 OHM RESISTOR
RTM	RUNNING TIME METER
TB1	TERMINAL BOARD 1
V	VOLTMETER
WTG	WATER TEMPERATURE GAUGE

NOTES:
1. INLINE FUSE TB1 48 TO TB1 1 13AG 9A.
2. ALL WIRE NUMBERS ARE IN PARENTHESIS.
3. USE #20GA WIRE ON ALL DEVICES UNLESS OTHERWISE SPECIFIED.
4. R1 USED ONLY ON 24V UNITS

KATOLIGHT
MANKATO, MINNESOTA

POINT TO POINT DIAGRAM

SIZE	DATE	DWG NO	
B	4-13-99	819-B-8462	
DESCRIPTION	STD 45	DWN BY SL	SHEET 1 OF 1

Katolight Service - Master Repair Manual - Page 1679

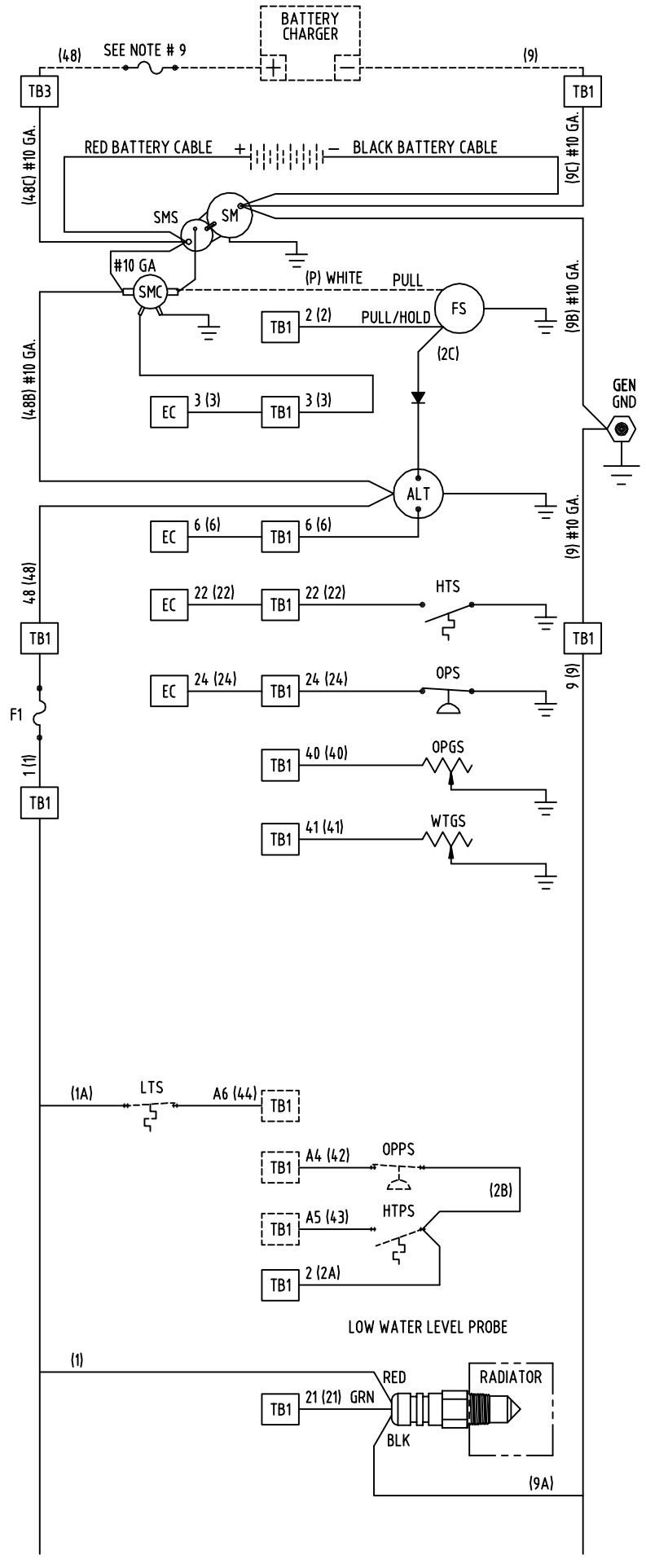

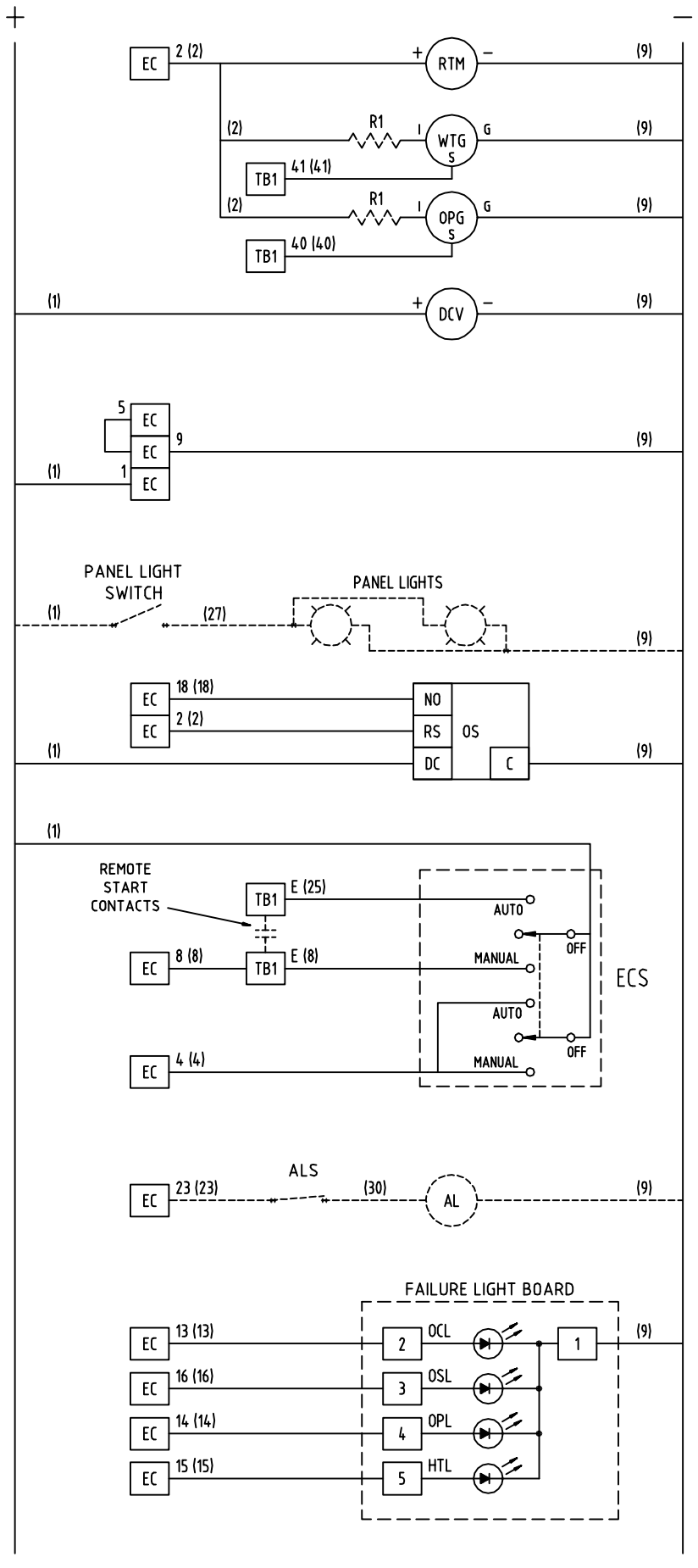

LEGEND

AL	ALARM
ALS	ALARM SILENCE SWITCH
ALT	ALTERNATOR
DCV	DC VOLTMETER
EC	ENGINE CONTROL KASSEC
ECS	ENGINE CONTROL SWITCH
F1	PANEL FUSE AGC 9AMP
FS	FUEL SOLENOID
GEN	GENERATOR
GND	GROUND
HTL	HIGH ENGINE TEMPERATURE LED
HTPS	HIGH ENGINE TEMP. PREALARM SWITCH
HTS	HIGH ENGINE TEMPERATURE SWITCH
LTS	LOW WATER TEMPERATURE SWITCH
LWL	LOW WATER LEVEL PROBE
OCL	ENGINE OVERCRANK LED
OPG	OIL PRESSURE GAUGE
OPGS	OIL PRESSURE GAUGE SENDER
OPL	LOW OIL PRESSURE LED
OPPS	LOW OIL PRESSURE PREALARM SWITCH
OPS	LOW OIL PRESSURE SWITCH
OS	OVERSPEED SWITCH SM 124
OSL	ENGINE OVERSPEED LED
PTT	PRESS TO TEST
R1	200 OHM RESISTOR
RTM	RUNNING TIME METER
SM	STARTER MOTOR
SMC	STARTER MOTOR COIL PILOT RELAY
SMS	STARTER MOTOR SOLENOID
TB1	TERMINAL BOARD 1
TB3	TERMINAL BOARD 3
WTG	WATER TEMPERATURE GAUGE
WTGS	WATER TEMPERATURE GAUGE SENDER

NOTE:
1. WIRE NUMBERS ARE IN PARENTHESIS.
2. ENGINE WIRING IS #16 GA UNLESS OTHERWISE SPECIFIED.
3. CONTROL PANEL WIRING IS #20 GA UNLESS OTHERWISE SPECIFIED.
4. ENGINE CONTROL SWITCH IS IN OFF POSITION.
5. R1 ONLY USED ON 24 V UNITS.
6. EC AND OS ARE AC AND DC DEVICES. SEE AC DIAGRAM.
7. SHORT DASHED LINES (------) INDICATE CUSTOMER CONNECTION OR OPTIONAL EQUIPMENT.
8. WHEN USING A 45 SERIES PANEL THE FOLLOWING WIRES WILL BE TIED OFF IN THE CONTROL PANEL UNLESS UNIT HAS THESE OPTIONS FACTORY INSTALLED.
   - 1A LOW WATER TEMPERATURE +
   - 2A OIL & WATER PREALARM +
   - 44 LOW WATER TEMPERATURE SIGNAL
   - 42 LOW OIL PREALARM SIGNAL
   - 43 HIGH ENGINE TEMP. PREALARM SIGNAL
9. BATTERY CHARGER FUSE ONLY WHEN REQUIRED OR SUPPLIED BY CHARGER MANUFACTURER.

REVISE: ADDED JUMPER FROM GEN GND TO STARTER, 3-27-2002 ECG
REVISE: WIRE BATTERY CHARGER TO STARTER, PREVIOUS UNITS ARE WIRED TO THE PANEL, 4-9-2002 ECG
REVISE: ADDED BC FUSE AND NOTE #9, 4-19-2002 ECG
REVISE: ADDED TB3 FOR BC, 7-25-2002 ECG

KATOLIGHT
MANKATO, MINNESOTA

DC LADDER DIAGRAM

SIZE	DATE	DWG NO
B	12-13-2001	819-B-11400

DESCRIPTION		DWN BY	SHEET
STD 45		ECG	1 OF 1

Katolight Service - Master Repair Manual - Page 1681

PANEL DOOR

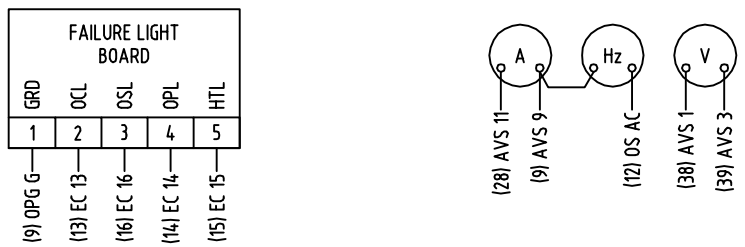

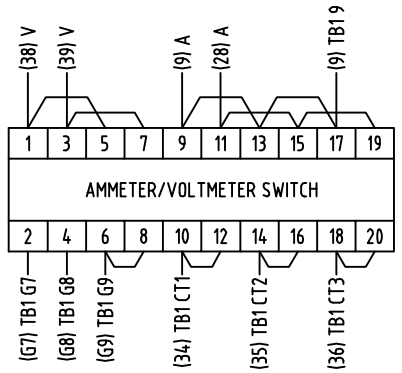

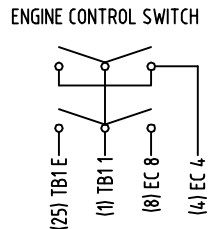

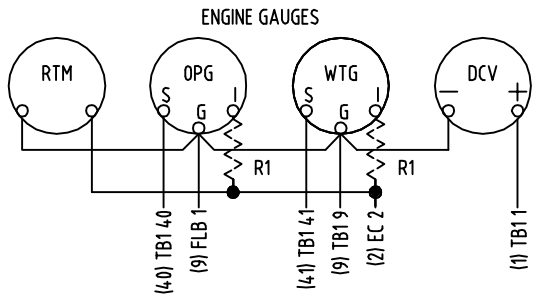

PANEL BACK

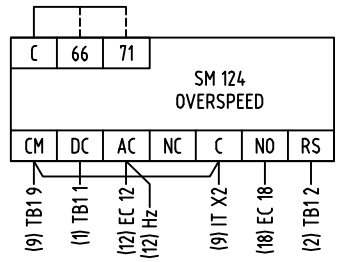

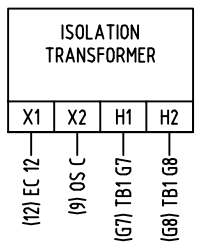

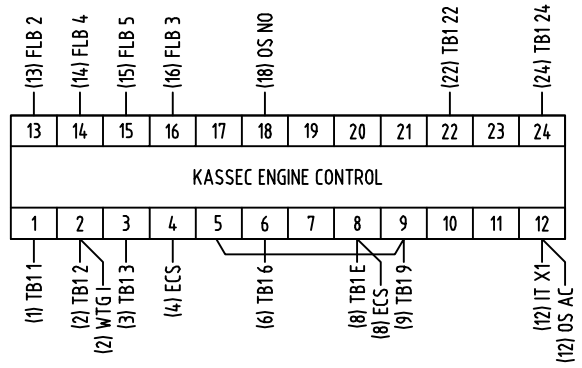

LEGEND

A	AMMETER
AVS	AMMETER/VOLTMETER SELECTOR SWITCH
DCV	DC VOLTMETER
EC	ENGINE CONTROL KASSEC
ECS	ENGINE CONTROL SWITCH
FLB	FAILURE LIGHT BOARD
GOV	GOVERNOR
HTL	HIGH ENGINE TEMPERATURE LED
HZ	FREQUENCY METER
IT	ISOLATION X-FORMER
OCL	ENGINE OVERCRANK LED
OPG	OIL PRESSURE GAUGE
OPL	LOW OIL PRESSURE LED
OS	OVERSPEED SWITCH SM 124
OSL	ENGINE OVERSPEED LED
R1	200 OHM RESISTOR
RTM	RUNNING TIME METER
TB1	TERMINAL BOARD 1
V	VOLTMETER
WTG	WATER TEMPERATURE GAUGE

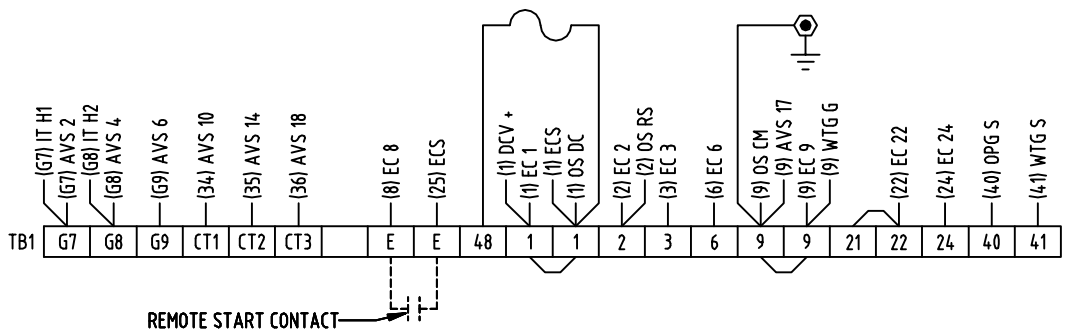

AMMETER/VOLTMETER SELECTOR SWITCH

	1 2	3 4	5 6	7 8	9 10	11 12	13 14	15 16	17 18	19 20
OFF					X		X		X	
L1 1-2	X	X				X	X		X	
L2 2-3		X	X		X			X	X	
L3 3-1	X			X	X		X			X

NOTES:
1. INLINE FUSE TB1 48 TO TB1 1 AGC 9A.
2. ALL WIRE NUMBERS ARE IN PARENTHESIS.
3. USE #20GA WIRE ON ALL DEVICES UNLESS OTHERWISE SPECIFIED.
4. R1 USED ONLY ON 24V UNITS.

KATOLIGHT
MANKATO, MINNESOTA

POINT TO POINT DIAGRAM

SIZE	DATE	DWG NO	
B	1-3-2002	819-B-11413	
DESCRIPTION	STD 45K	DWN BY ECG	SHEET 1 OF 1

Katolight Service - Master Repair Manual - Page 1683

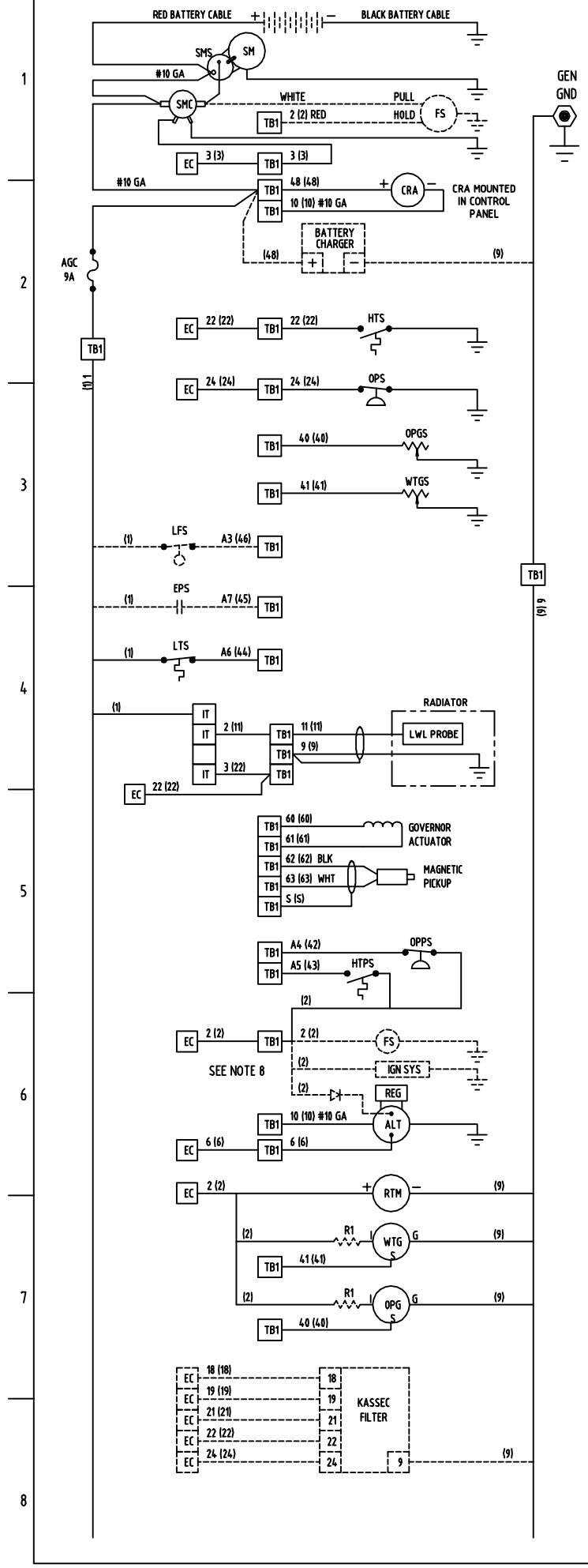

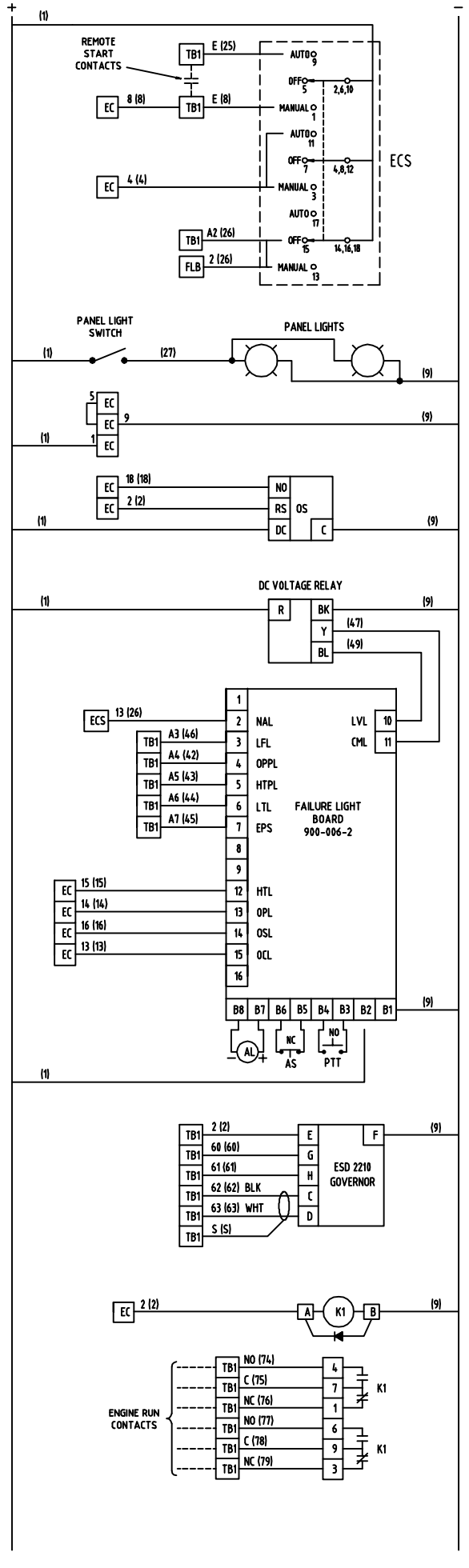

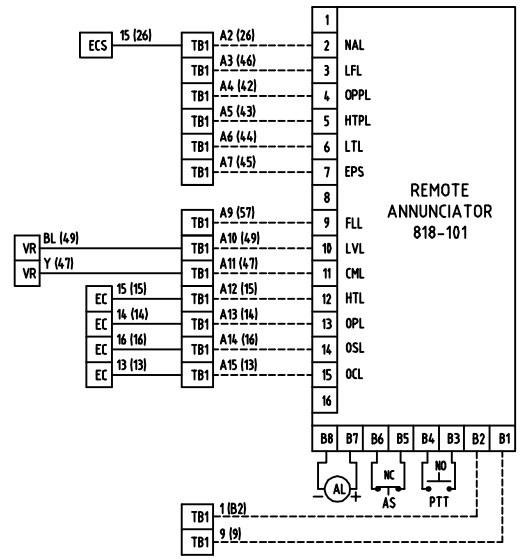

LEGEND

AL	ALARM
ALT	ALTERNATOR
AS	ALARM SILENCE SWITCH
CML	CHARGER MALFUNCTION LED
CRA	CHARGE RATE AMMETER
DB	DIODE BLOCK
EC	ENGINE CONTROL KASSEC
ECS	ENGINE CONTROL SWITCH
EPS	EMERGENCY POWER SUPPLYING LOAD LED
ESL	EMERGENCY STOP PUSHBUTTON LED
FS	FUEL SOLENOID
GEN	GENERATOR
GND	GROUND
HTL	HIGH ENGINE TEMPERATURE LED
HTPL	HIGH ENGINE TEMPERATURE PREALARM LED
HTPS	HIGH ENGINE TEMPERATURE PREALARM SWITCH
HTS	HIGH ENGINE TEMPERATURE SWITCH
IT	ISOLATION X-FORMER/LOW WATER LEVEL BRD
K1	ENGINE RUN RELAY
LFL	LOW FUEL LEVEL LED
LFS	LOW FUEL LEVEL SWITCH
LTL	LOW WATER TEMPERATURE LED
LTS	LOW WATER TEMPERATURE SWITCH
LVL	LOW BATTERY VOLTAGE LED
LWL	LOW WATER LEVEL PROBE
NAL	UNIT NOT IN AUTO LED
OCL	ENGINE OVERCRANK LED
OPG	OIL PRESSURE GAUGE
OPGS	OIL PRESSURE GAUGE SENDER
OPL	LOW OIL PRESSURE LED
OPPL	LOW OIL PRESSURE PREALARM LED
OPPS	LOW OIL PRESSURE PREALARM SWITCH
OPS	LOW OIL PRESSURE SWITCH
OS	OVERSPEED SWITCH SM 124
OSL	ENGINE OVERSPEED LED
PTT	PRESS TO TEST
R1	200 OHM RESISTOR
RTM	RUNNING TIME METER
SM	STARTER MOTOR
SMC	STARTER MOTOR COIL PILOT RELAY
SMS	STARTER MOTOR SOLENOID
TB1	TERMINAL BOARD 1
VR	DC VOLTAGE RELAY
WTG	WATER TEMPERATURE GAUGE
WTGS	WATER TEMPERATURE GAUGE SENDER

ENGINE CONTROL ROTARY SWITCH

	1 2	3 4	5 6	7 8	9 10	11 12	13 14	15 16	17 18
MAN	X	X					X		
OFF			X	X				X	
AUTO					X	X			X

NOTE:
1. WIRE NUMBERS ARE IN PARENTHESIS.
2. ENGINE WIRING IS #16 GA UNLESS OTHERWISE SPECIFIED.
3. CONTROL PANEL WIRING IS #20 GA UNLESS OTHERWISE SPECIFIED.
4. ENGINE CONTROL SWITCH IS IN OFF POSITION.
5. R1 ONLY USED ON 24 V UNITS.
6. EC AND OS ARE AC AND DC DEVICES. SEE AC DIAGRAM.
7. SHORT DASHED LINES (------) INDICATE CUSTOMER CONNECTION OR OPTIONAL EQUIPMENT.
8. DIESEL UNITS CONNECT FS AND DIODE, NATURAL GAS OR LP UNITS CONNECT IGN SYS. CUSTOMER MUST CONNECT FS. JOHN DEERE UNITS RG076T, RG6076A AND TO6059T CONNECT 3 WIRE FS. THESE CONNECTIONS ARE TYPICAL BUT NOT ALWAYS USED.
9. ALL PERKINS UNITS HAVE KASSEC FILTER.

KATOLIGHT
MANKATO, MINNESOTA

DC LADDER DIAGRAM

SIZE	DATE	DWG NO	
C	5-5-99	819-C-4749	
DESCRIPTION	STD 50	DWN BY SL	SHEET 1 OF 1

Katolight Service - Master Repair Manual - Page 1685

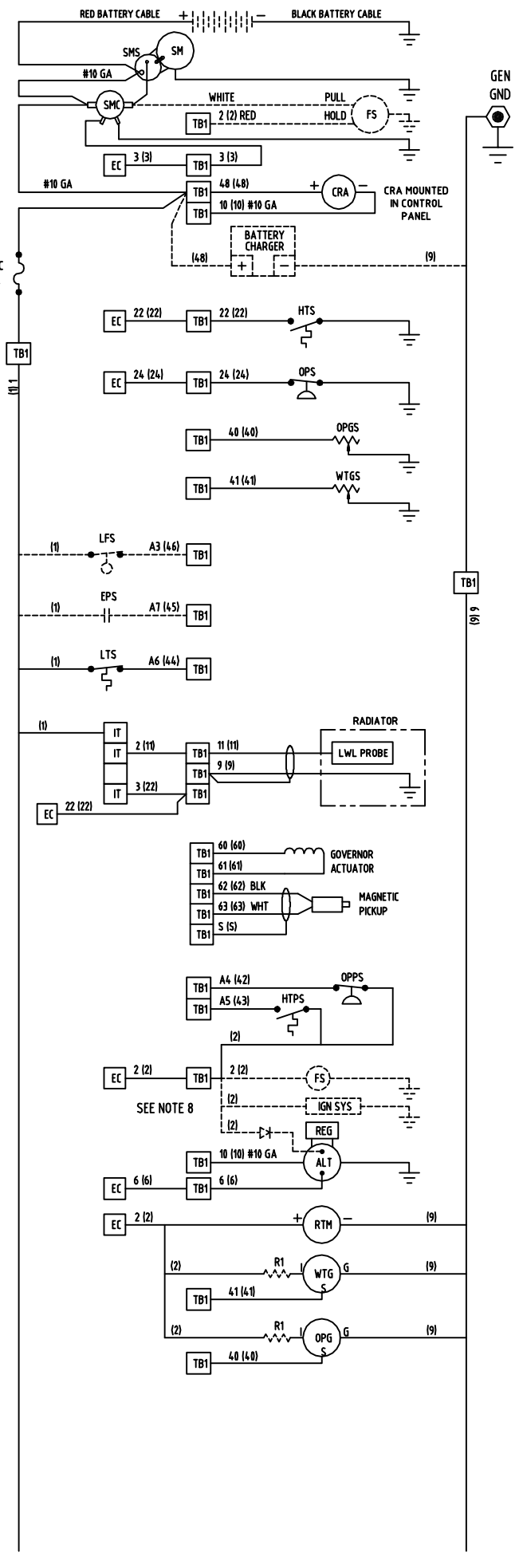

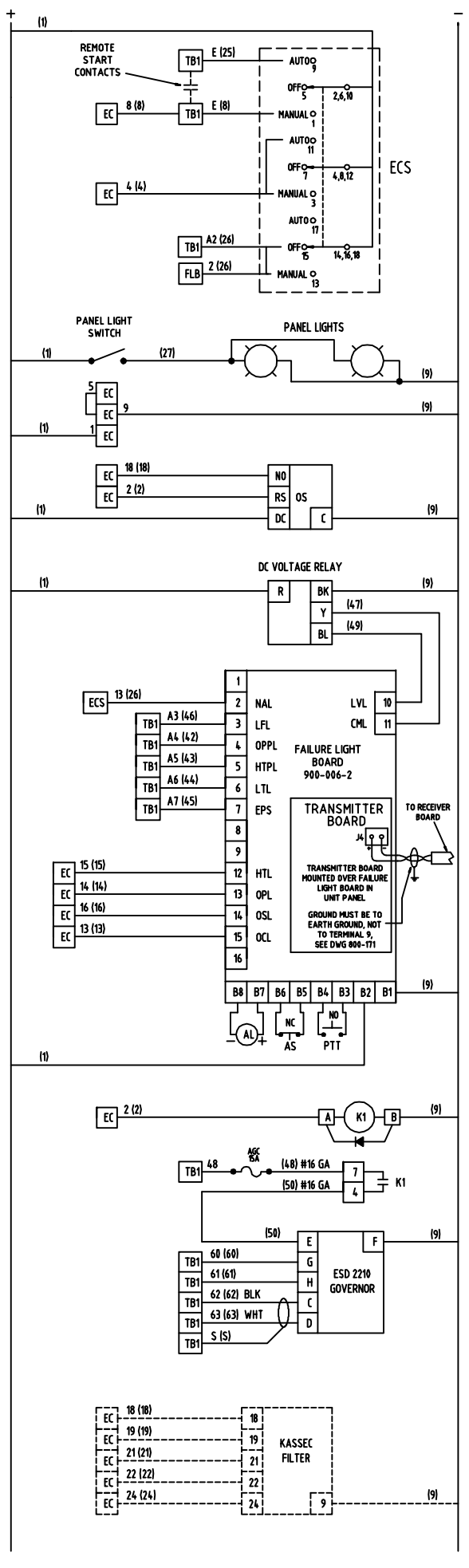

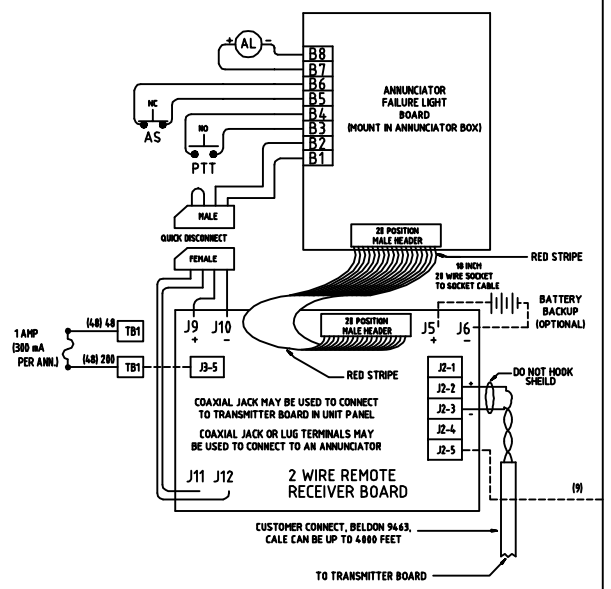

LEGEND

AL	ALARM
ALT	ALTERNATOR
AS	ALARM SILENCE SWITCH
CML	CHARGER MALFUNCTION LED
CRA	CHARGE RATE AMMETER
EC	ENGINE CONTROL KASSEC
ECS	ENGINE CONTROL SWITCH
EPS	EMERGENCY POWER SUPPLYING LOAD LED
FS	FUEL SOLENOID
GEN	GENERATOR
GND	GROUND
HTL	HIGH ENGINE TEMPERATURE LED
HTPL	HIGH ENGINE TEMPERATURE PREALARM LED
HTPS	HIGH ENGINE TEMPERATURE PREALARM SWITCH
HTS	HIGH ENGINE TEMPERATURE SWITCH
IT	ISOLATION X-FORMER/LOW WATER LEVEL BRD
K1	GOVERNOR PILOT RELAY
LFL	LOW FUEL LEVEL LED
LFS	LOW FUEL LEVEL SWITCH
LTL	LOW WATER TEMPERATURE LED
LTS	LOW WATER TEMPERATURE SWITCH
LVL	LOW BATTERY VOLTAGE LED
LWL	LOW WATER LEVEL PROBE
NAL	UNIT NOT IN AUTO LED
OCL	ENGINE OVERCRANK LED
OPG	OIL PRESSURE GAUGE
OPGS	OIL PRESSURE GAUGE SENDER
OPL	LOW OIL PRESSURE LED
OPPL	LOW OIL PRESSURE PREALARM LED
OPPS	LOW OIL PRESSURE PREALARM SWITCH
OPS	LOW OIL PRESSURE SWITCH
OS	OVERSPEED SWITCH SM 124
OSL	ENGINE OVERSPEED LED
PTT	PRESS TO TEST
R1	200 OHM RESISTOR
RTM	RUNNING TIME METER
SM	STARTER MOTOR
SMC	STARTER MOTOR COIL PILOT RELAY
SMS	STARTER MOTOR SOLENOID
TB1	TERMINAL BOARD 1
VR	DC VOLTAGE RELAY
WTG	WATER TEMPERATURE GAUGE
WTGS	WATER TEMPERATURE GAUGE SENDER

ENGINE CONTROL ROTARY SWITCH

	1 2	3 4	5 6	7 8	9 10	11 12	13 14	15 16	17 18
MAN	X	X					X		
OFF			X	X				X	
AUTO					X	X			X

NOTE:
1. WIRE NUMBERS ARE IN PARENTHESIS.
2. ENGINE WIRING IS #16 GA UNLESS OTHERWISE SPECIFIED.
3. CONTROL PANEL WIRING IS #20 GA UNLESS OTHERWISE SPECIFIED.
4. ENGINE CONTROL SWITCH IS IN OFF POSITION.
5. R1 ONLY USED ON 24 V UNITS.
6. EC AND OS ARE AC AND DC DEVICES. SEE AC DIAGRAM.
7. SHORT DASHED LINES (-------) INDICATE CUSTOMER CONNECTION OR OPTIONAL EQUIPMENT.
8. DIESEL UNITS CONNECT FS AND DIODE, NATURAL GAS OR LP UNITS CONNECT IGN SYS. CUSTOMER MUST CONNECT FS. JOHN DEERE UNITS RG076T, RG6076A AND TO6059T CONNECT 3 WIRE FS. THESE CONNECTIONS ARE TYPICAL BUT NOT ALWAYS USED.
9. ALL PERKINS UNITS HAVE KASSEC FILTER.
10. ALTERNATOR WIRE CONNECTION FOR GM ENGINE ONLY:
    (2) FROM TB1 TO THE PURPLE WIRE OF THE ALTERNATOR
    (6) FROM TB1 TO THE WHITE WIRE OF THE ALTERNATOR
    (10) #10 GA FROM TB1 TO THE WHITE #10 GA WIRE OF THE ALTERNATOR

KATOLIGHT
MANKATO, MINNESOTA

DC LADDER DIAGRAM

SIZE	DATE	DWG NO
C	1-20-2000	819-C-5004
DESCRIPTION	STD 50	DWN BY SL / SHEET 1 OF 1

Katolight Service - Master Repair Manual - Page 1687

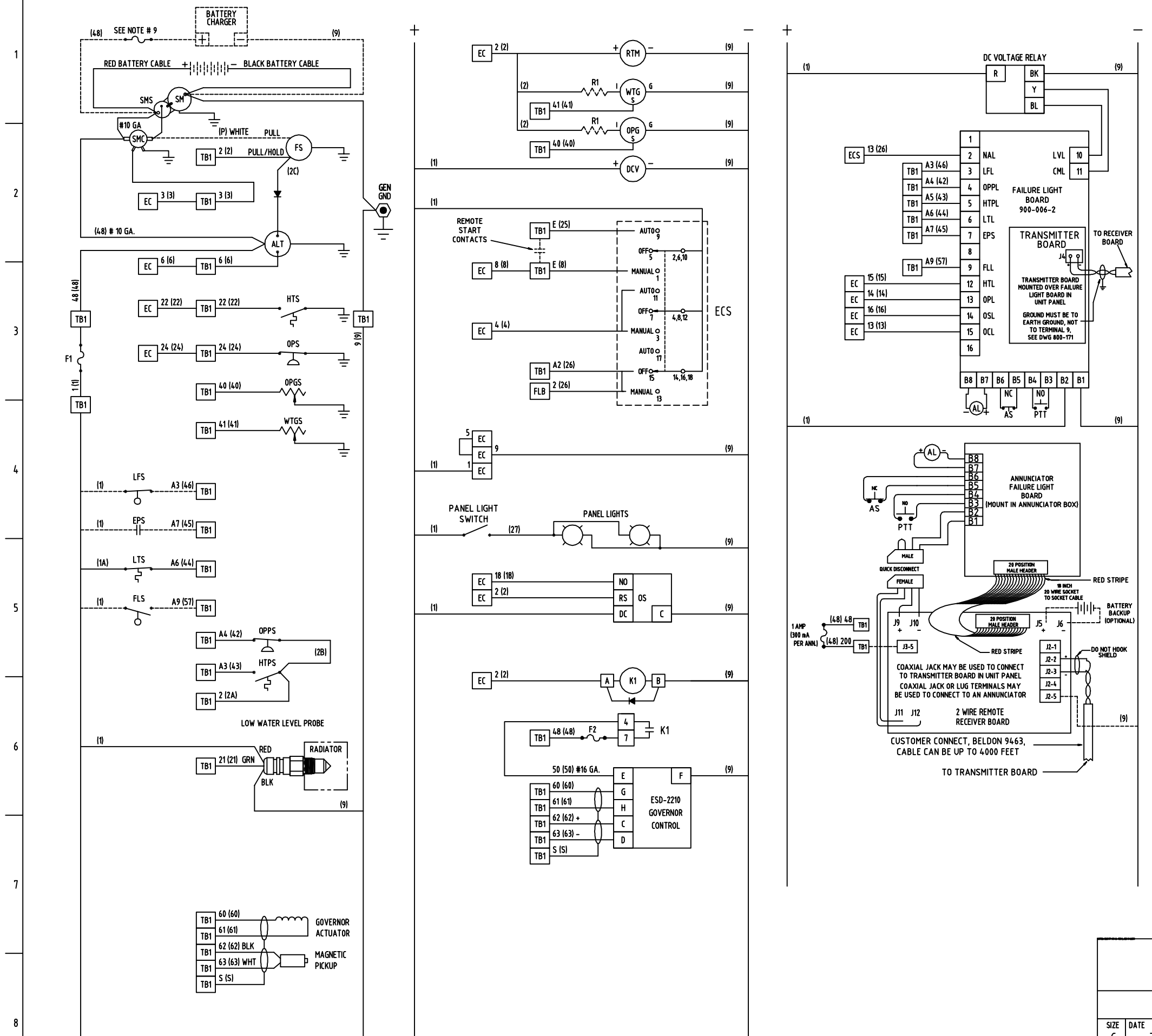

LEGEND

AL	ALARM
ALT	ALTERNATOR
AS	ALARM SILENCE SWITCH
CML	CHARGER MALFUNCTION LED
DCV	DC VOLTMETER
EC	ENGINE CONTROL KASSEC
ECS	ENGINE CONTROL SWITCH
EPS	EMERGENCY POWER SUPPLYING LOAD LED
F1	PANEL FUSE AGC 9AMP
F2	GOVERNOR POWER FUSE AGC 15 AMP
FLL	FUEL LEAK LED
FLS	FUEL LEAK SWITCH
FS	FUEL SOLENOID
GEN	GENERATOR
GND	GROUND
HTL	HIGH ENGINE TEMPERATURE LED
HTPL	HIGH ENGINE TEMPERATURE PREALARM LED
HTPS	HIGH ENGINE TEMPERATURE PREALARM SWITCH
HTS	HIGH ENGINE TEMPERATURE SWITCH
K1	GOVERNOR PILOT RELAY
LFL	LOW FUEL LEVEL LED
LFS	LOW FUEL LEVEL SWITCH
LTL	LOW WATER TEMPERATURE LED
LTS	LOW WATER TEMPERATURE SWITCH
LVL	LOW BATTERY VOLTAGE LED
LWL	LOW WATER LEVEL PROBE
NAL	UNIT NOT IN AUTO LED
OCL	ENGINE OVERCRANK LED
OPG	OIL PRESSURE GAUGE
OPGS	OIL PRESSURE GAUGE SENDER
OPL	LOW OIL PRESSURE LED
OPPL	LOW OIL PRESSURE PREALARM LED
OPPS	LOW OIL PRESSURE PREALARM SWITCH
OPS	LOW OIL PRESSURE SWITCH
OS	OVERSPEED SWITCH SM 124
OSL	ENGINE OVERSPEED LED
PTT	PRESS TO TEST
R1	200 OHM RESISTOR
RTM	RUNNING TIME METER
SM	STARTER MOTOR
SMC	STARTER MOTOR COIL PILOT RELAY
SMS	STARTER MOTOR SOLENOID
TB1	TERMINAL BOARD 1
VR	DC VOLTAGE RELAY
WTG	WATER TEMPERATURE GAUGE
WTGS	WATER TEMPERATURE GAUGE SENDER

ENGINE CONTROL ROTARY SWITCH

	1 2	3 4	5 6	7 8	9 10	11 12	13 14	15 16	17 18
MAN	X	X					X		
OFF			X	X				X	
AUTO					X	X			X

NOTE:
1. WIRE NUMBERS ARE IN PARENTHESIS.
2. ENGINE WIRING IS #16 GA UNLESS OTHERWISE SPECIFIED.
3. CONTROL PANEL WIRING IS #20 GA UNLESS OTHERWISE SPECIFIED.
4. ENGINE CONTROL SWITCH IS IN OFF POSITION.
5. R1 ONLY USED ON 24 V UNITS.
6. EC AND OS ARE AC AND DC DEVICES. SEE AC DIAGRAM.
7. SHORT DASHED LINES (------) INDICATE CUSTOMER CONNECTION OR OPTIONAL EQUIPMENT.
8. DIESEL UNITS CONNECT FS , NATURAL GAS OR LP UNITS CONNECT IGN SYS. CUSTOMER MUST CONNECT FS.
9. BATTERY CHARGER FUSE ONLY WHEN SUPPLIED OR REQUIRED BY CHARGER MANUFACTURER.

KATOLIGHT
MANKATO, MINNESOTA

DC LADDER DIAGRAM

SIZE	DATE	DWG NO
C	3-27-2002	819-C-5791

DESCRIPTION	DWN BY	SHEET
50K, ESD-2210	ECG	1 OF 1

Katolight Service - Master Repair Manual - Page 1689

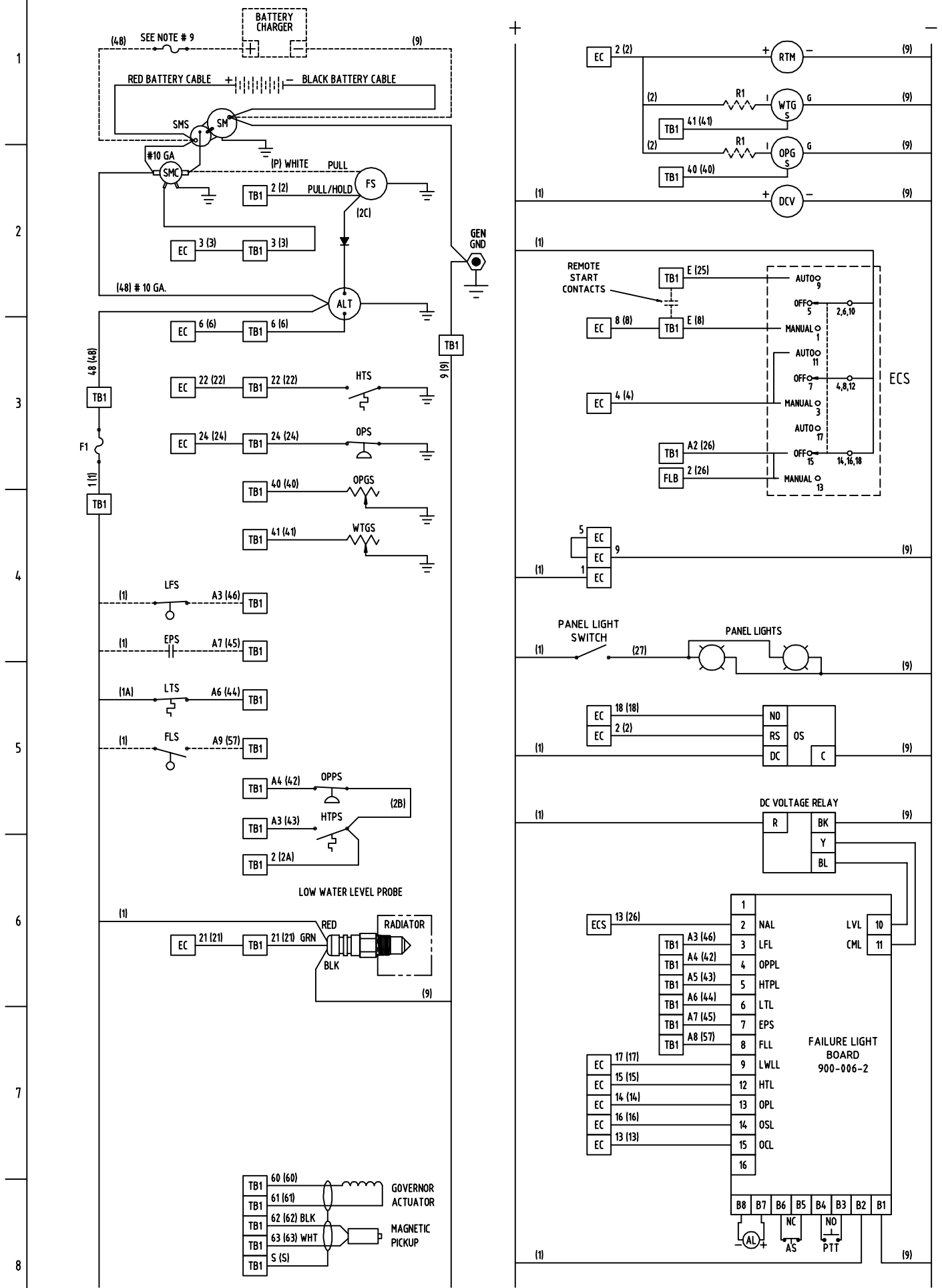

LEGEND

AL	ALARM
ALT	ALTERNATOR
AS	ALARM SILENCE SWITCH
CML	CHARGER MALFUNCTION LED
DCV	DC VOLTMETER
EC	ENGINE CONTROL KASSEC
ECS	ENGINE CONTROL SWITCH
EPS	EMERGENCY POWER SUPPLYING LOAD LED
F1	PANEL FUSE AGC 9AMP
FLL	FUEL LEAK LED
FLS	FUEL LEAK SWITCH
FS	FUEL SOLENOID
GEN	GENERATOR
GND	GROUND
HTL	HIGH ENGINE TEMPERATURE LED
HTPL	HIGH ENGINE TEMPERATURE PREALARM LED
HTPS	HIGH ENGINE TEMPERATURE PREALARM SWITCH
HTS	HIGH ENGINE TEMPERATURE SWITCH
LFL	LOW FUEL LEVEL LED
LFS	LOW FUEL LEVEL SWITCH
LTL	LOW WATER TEMPERATURE LED
LTS	LOW WATER TEMPERATURE SWITCH
LVL	LOW BATTERY VOLTAGE LED
LWL	LOW WATER LEVEL PROBE
LWLL	LOW WATER LEVEL LED
NAL	UNIT NOT IN AUTO LED
OCL	ENGINE OVERCRANK LED
OPG	OIL PRESSURE GAUGE
OPGS	OIL PRESSURE GAUGE SENDER
OPL	LOW OIL PRESSURE LED
OPPL	LOW OIL PRESSURE PREALARM LED
OPPS	LOW OIL PRESSURE PREALARM SWITCH
OPS	LOW OIL PRESSURE SWITCH
OS	OVERSPEED SWITCH SM 124
OSL	ENGINE OVERSPEED LED
PTT	PRESS TO TEST
R1	200 OHM RESISTOR
RTM	RUNNING TIME METER
SM	STARTER MOTOR
SMC	STARTER MOTOR COIL PILOT RELAY
SMS	STARTER MOTOR SOLENOID
TB1	TERMINAL BOARD 1
VR	DC VOLTAGE RELAY
WTG	WATER TEMPERATURE GAUGE
WTGS	WATER TEMPERATURE GAUGE SENDER

ENGINE CONTROL ROTARY SWITCH

	1 2	3 4	5 6	7 8	9 10	11 12	13 14	15 16	17 18
MAN	X	X					X		
OFF			X	X				X	
AUTO					X	X			X

NOTE:
1. WIRE NUMBERS ARE IN PARENTHESIS.
2. ENGINE WIRING IS #16 GA UNLESS OTHERWISE SPECIFIED.
3. CONTROL PANEL WIRING IS #20 GA UNLESS OTHERWISE SPECIFIED.
4. ENGINE CONTROL SWITCH IS IN OFF POSITION.
5. R1 ONLY USED ON 24 V UNITS.
6. EC AND OS ARE AC AND DC DEVICES. SEE AC DIAGRAM.
7. SHORT DASHED LINES (------) INDICATE CUSTOMER CONNECTION OR OPTIONAL EQUIPMENT.
8. DIESEL UNITS CONNECT FS , NATURAL GAS OR LP UNITS CONNECT IGN SYS. CUSTOMER MUST CONNECT FS.

KATOLIGHT
MANKATO, MINNESOTA

DC LADDER DIAGRAM

SIZE	DATE	DWG NO
C	4-2-2002	819-C-5793

DESCRIPTION	DWN BY	SHEET
50K, ESD-2210	ECG	1 OF 1

Katolight Service - Master Repair Manual - Page 1691

SPECIAL NOTE
TO MINIMIZE ANY ELECTRICAL NOISE BEING INTRODUCED INTO THE ENGINE CONTROLLER, CONTROL WIRING AND AC POWER LINES NEED TO BE RUN IN SEPARATE CONDUITS.

AMMETER/VOLTMETER COMBINATION
SELECTOR SWITCH #35054

	1 2	3 4	5 6	7 8	9 10	11 12	13 14	15 16	17 18	19 20
OFF					X		X		X	
L1 1-2	X	X				X	X		X	
L2 2-3		X	X		X			X	X	
L3 1-3	X			X	X		X			X

✳ KASSEC AND SM 124 ARE AC AND DC DEVICES. SEE DC LADDER DIAGRAM.

CONTROL PANEL

LEGEND
A AMMETER
Hz FREQUENCY METER
V VOLTMETER

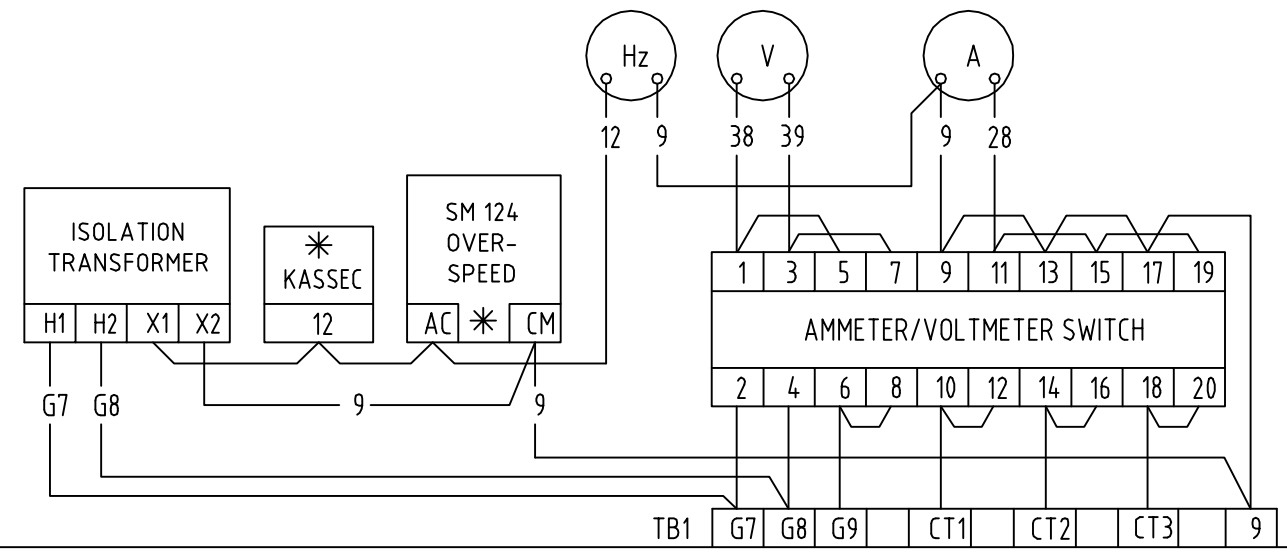

GENERATOR OUTLET BOX

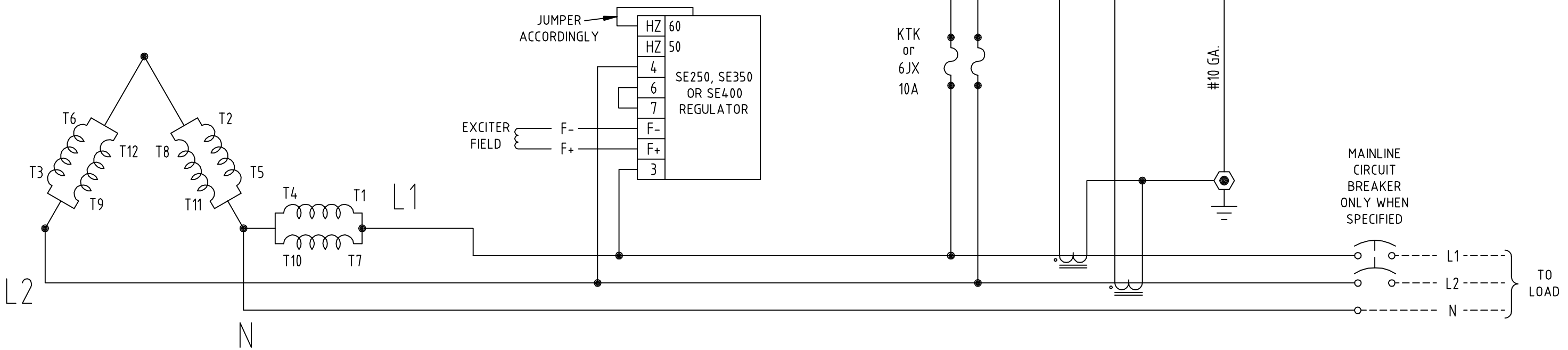

REVISE: AS OF 5-16-2002 #9 FROM TB1 TO GRN STUD IS #10 GA WIRE, 5-16-2002 ECG

THIS DRAWING IS PROPERTY OF KATOLIGHT CORPORATION AND IS INTENDED FOR USE WITH OUR VENDERS AND CUSTOMERS. ANY CHANGES/MODIFICATIONS BY OTHERS MAY VOID DRAWING. DRAWING CHANGES MUST BE DONE BY KATOLIGHT AND MAY BE DONE SO AT ANYTIME.

KATOLIGHT
MANKATO, MINNESOTA

AC DIAGRAM

SIZE	DATE	DWG NO
B	7-24-2001	819-B-10701

DESCRIPTION	120/240V 1ø	DWN BY	ECG	SHEET	1 OF 1

Katolight Service - Master Repair Manual - Page 1693

CONTROL PANEL

AMMETER/VOLTMETER COMBINATION
SELECTOR SWITCH #35054

	1 2	3 4	5 6	7 8	9 10	11 12	13 14	15 16	17 18	19 20
OFF					X		X		X	
L1 1-2	X	X				X	X		X	
L2 2-3		X	X		X			X	X	
L3 1-3	X			X	X		X			X

✳ KASSEC AND SM 124 ARE AC AND DC DEVICES. SEE DC LADDER DIAGRAM.

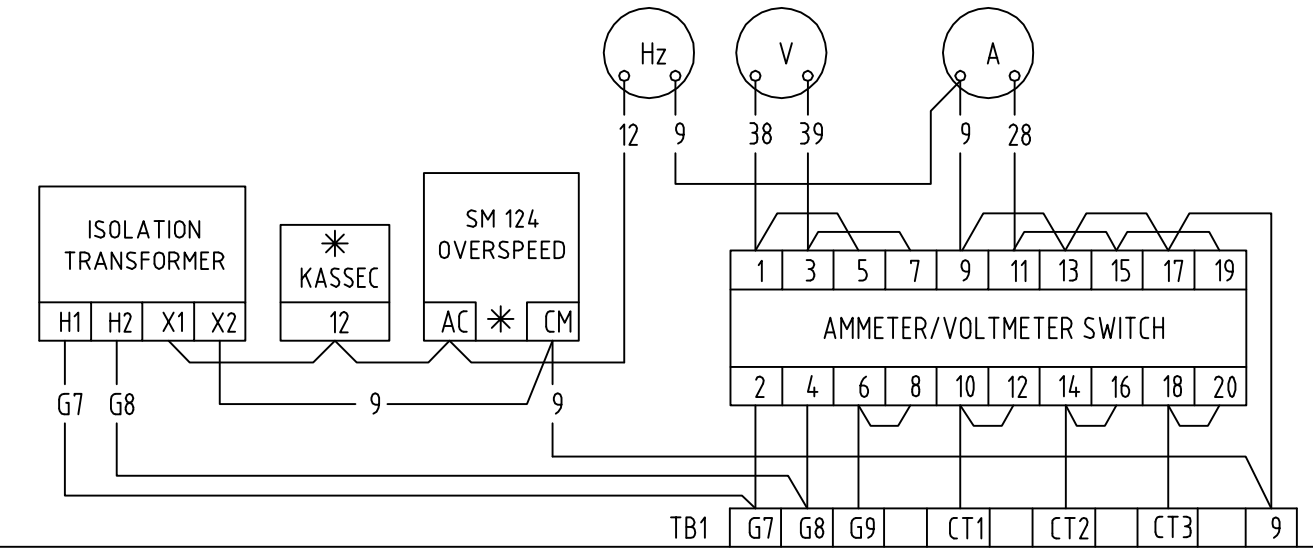

LEGEND
A AMMETER
Hz FREQUENCY METER
V VOLTMETER

GENERATOR OUTLET BOX

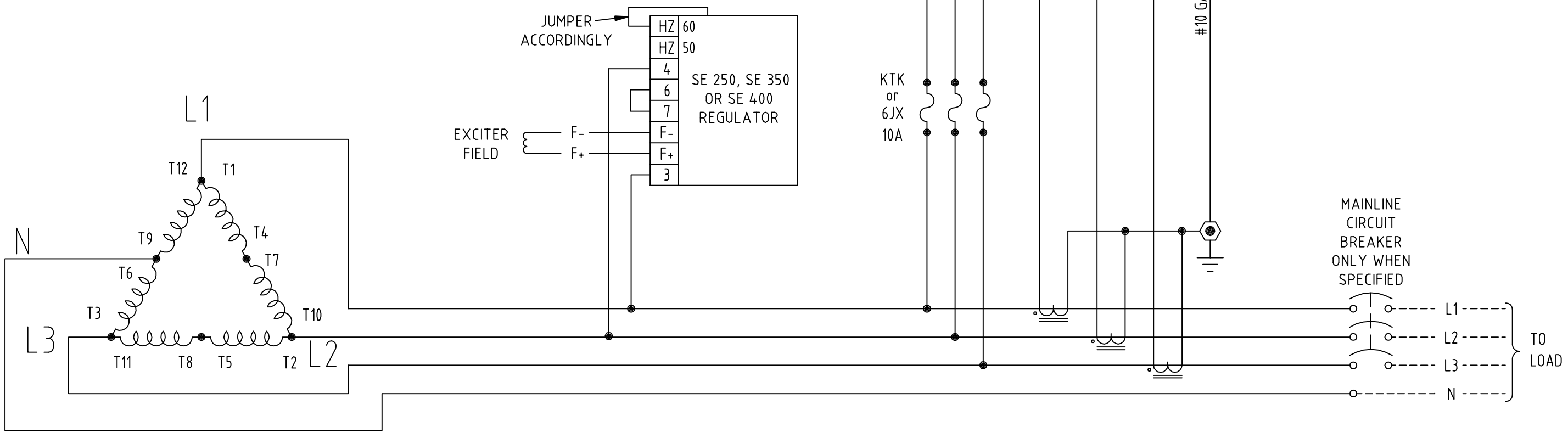

NOTE:
1. LINE 2 IS THE HIGH LEG

SPECIAL NOTE
TO MINIMIZE ANY ELECTRICAL NOISE BEING INTRODUCED INTO THE ENGINE CONTROLLER, CONTROL WIRING AND AC POWER LINES NEED TO BE RUN IN SEPARATE CONDUITS.

REVISE: AS OF 5-16-2002 #9 FROM TB1 TO GRN SUD IS #10 GA WIRE, 5-16-2002 ECG

THIS DRAWING IS PROPERTY OF KATOLIGHT CORPORATION AND IS INTENDED FOR USE WITH OUR VENDERS AND CUSTOMERS. ANY CHANGES/MODIFICATIONS BY OTHERS MAY VOID DRAWING. DRAWING CHANGES MUST BE DONE BY KATOLIGHT AND MAY BE DONE SO AT ANYTIME.

KATOLIGHT
MANKATO, MINNESOTA

AC DIAGRAM

SIZE	DATE	DWG NO
B	8-2-2001	819-B-10702

DESCRIPTION	DWN BY	SHEET
120/240V 3Ø	ECG	1 OF 1

Katolight Service - Master Repair Manual - Page 1695

CONTROL PANEL

AMMETER/VOLTMETER COMBINATION
SELECTOR SWITCH #35054

	1 2	3 4	5 6	7 8	9 10	11 12	13 14	15 16	17 18	19 20
OFF					X		X		X	
L1 1-2	X	X				X	X		X	
L2 2-3		X	X		X			X	X	
L3 1-3	X			X	X		X			X

✳ KASSEC AND SM 124 ARE AC AND DC DEVICES. SEE DC LADDER DIAGRAM.

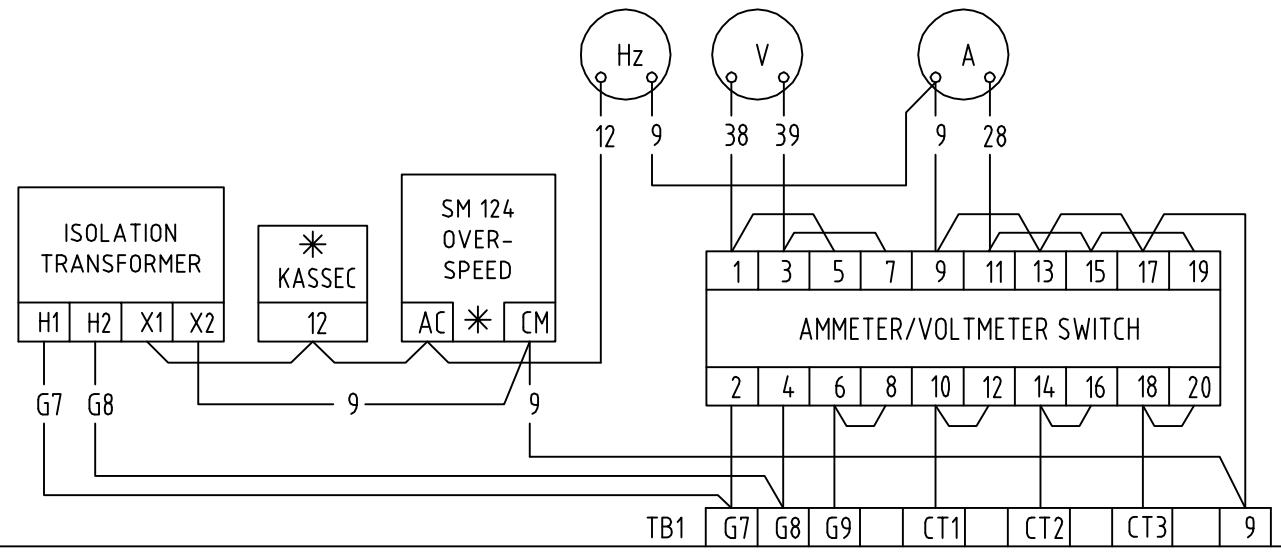

LEGEND
A AMMETER
Hz FREQUENCY METER
V VOLTMETER

GENERATOR OUTLET BOX

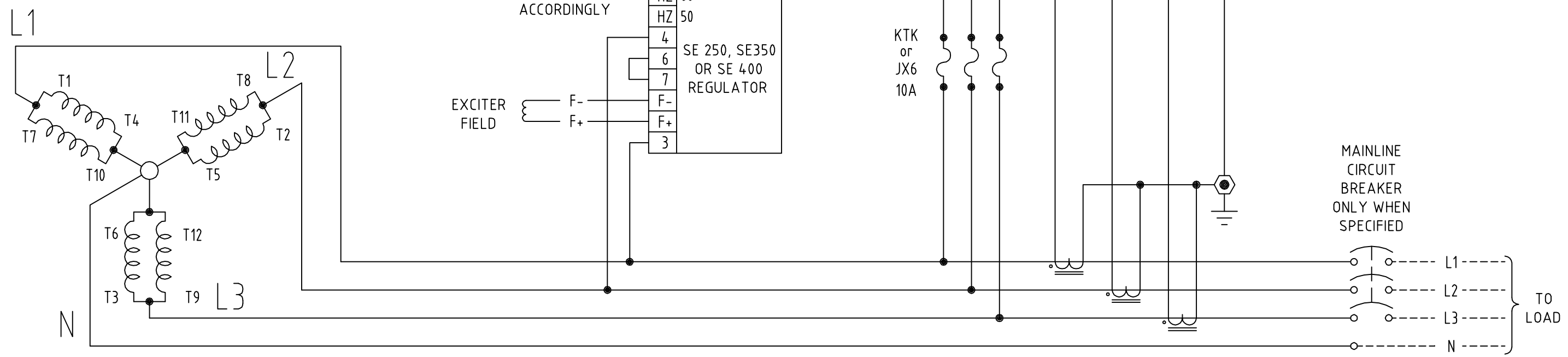

REVISE: AS OF 5-16-2002 #9 FROM TB1 TO GRN SUD IS #10 GA WIRE, 5-16-2002 ECG

SPECIAL NOTE
TO MINIMIZE ANY ELECTRICAL NOISE BEING INTRODUCED INTO THE ENGINE CONTROLLER, CONTROL WIRING AND AC POWER LINES NEED TO BE RUN IN SEPARATE CONDUITS.

THIS DRAWING IS PROPERTY OF KATOLIGHT CORPORATION AND IS INTENDED FOR USE WITH OUR VENDERS AND CUSTOMERS. ANY CHANGES/MODIFICATIONS BY OTHERS MAY VOID DRAWING. DRAWING CHANGES MUST BE DONE BY KATOLIGHT AND MAY BE DONE SO AT ANYTIME.

KATOLIGHT
MANKATO, MINNESOTA

AC DIAGRAM

SIZE	DATE	DWG NO	
B	7-24-2001	819-B-10703	
DESCRIPTION	120/208 3ϕ	DWN BY ECG	SHEET 1 OF 1

Katolight Service - Master Repair Manual - Page 1697

CONTROL PANEL

AMMETER/VOLMETER COMBINATION
SELECTOR SWITCH #35054

	1 2	3 4	5 6	7 8	9 10	11 12	13 14	15 16	17 18	19 20
OFF					X		X		X	
L1 1-2	X	X				X	X		X	
L2 2-3		X	X		X			X	X	
L3 1-3	X			X	X		X			X

✳ KASSEC AND SM 124 ARE AC AND DC DEVICES. SEE DC LADDER DIAGRAM.

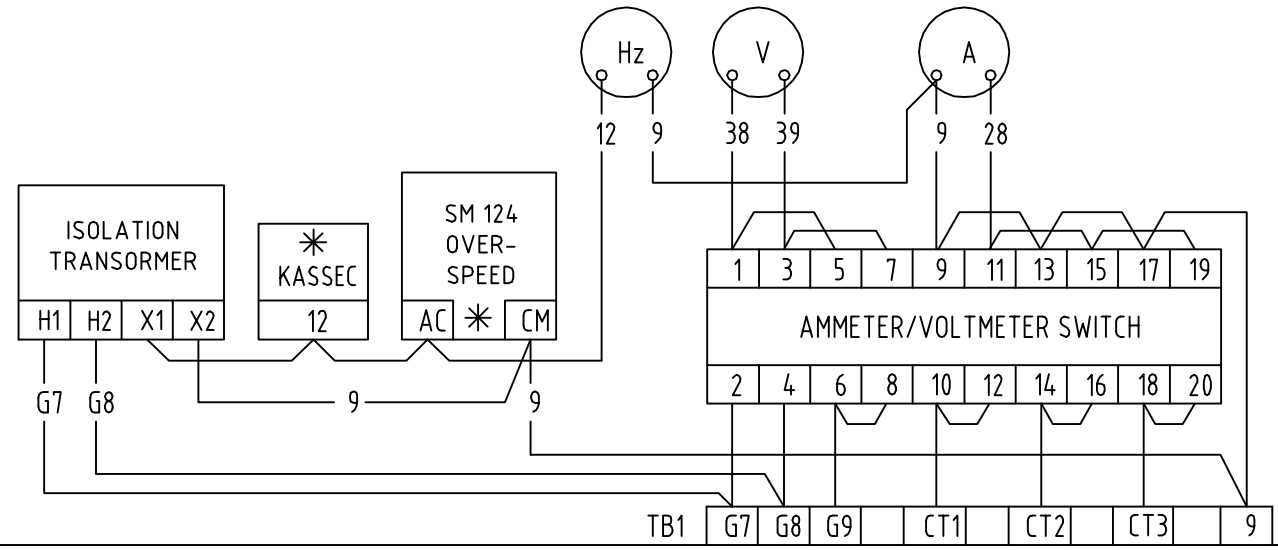

LEGEND
A AMMETER
Hz FREQUENCY METER
V VOLTMETER

GENERATOR OUTLET BOX

L1

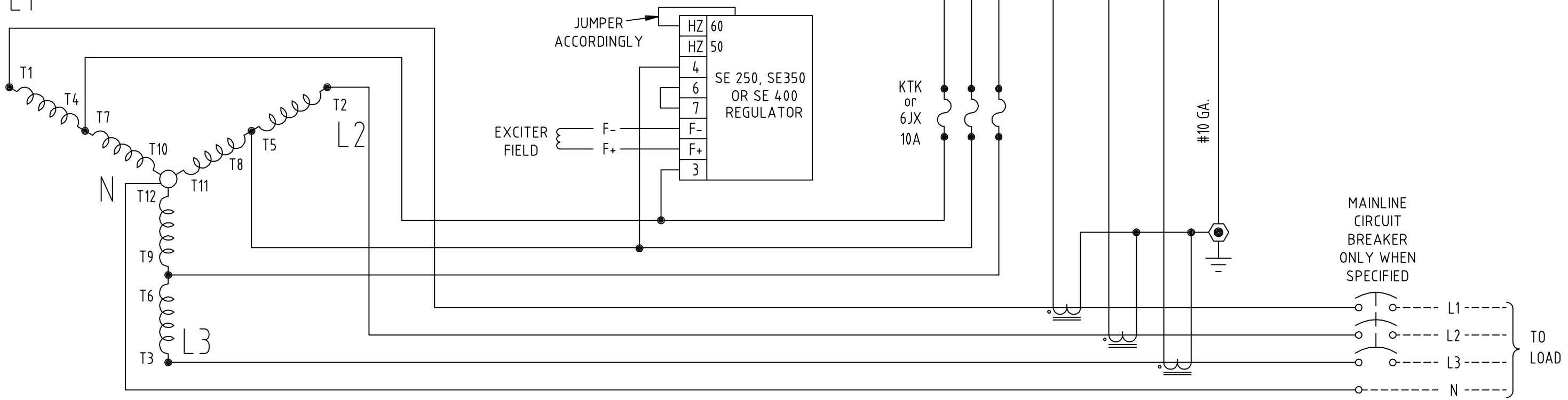

REVISE: AS OF 5-16-2002 #9 FROM TB1 TO GRN STUD IS #10 GA WIRE, 5-16-2002 ECG

THIS DRAWING IS PROPERTY OF KATOLIGHT CORPORATION AND IS INTENDED FOR USE WITH OUR VENDERS AND CUSTOMERS. ANY CHANGES/MODIFICATIONS BY OTHERS MAY VOID DRAWING. DRAWING CHANGES MUST BE DONE BY KATOLIGHT AND MAY BE DONE SO AT ANYTIME.

KATOLIGHT
MANKATO, MINNESOTA

AC DIAGRAM

SIZE	DATE	DWG NO
B	4-25-2001	819-B-10704

DESCRIPTION	DWN BY	SHEET
480/277V 3ϕ	ECG	1 OF 1

Katolight Service - Master Repair Manual - Page 1699

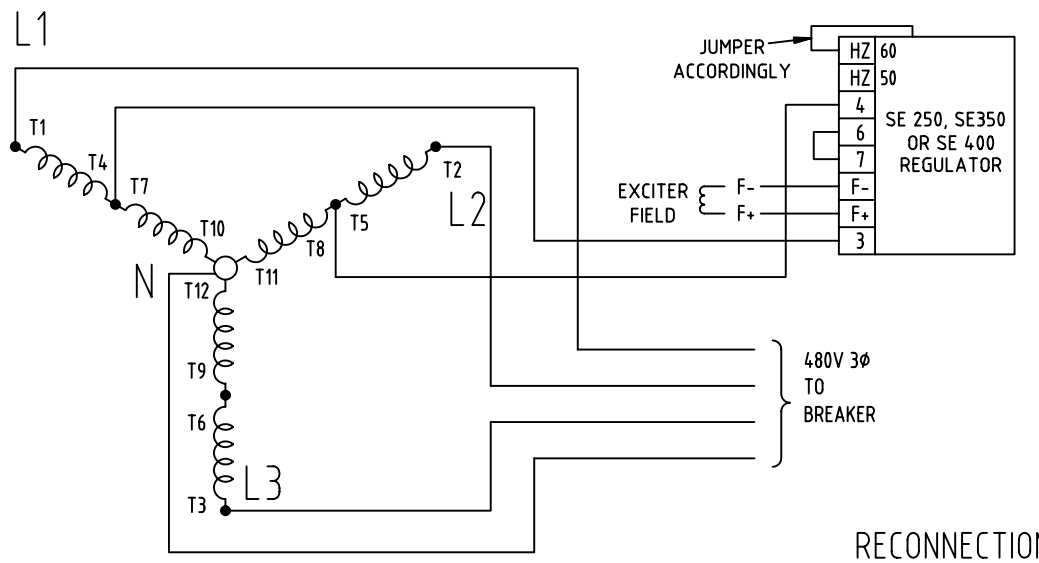

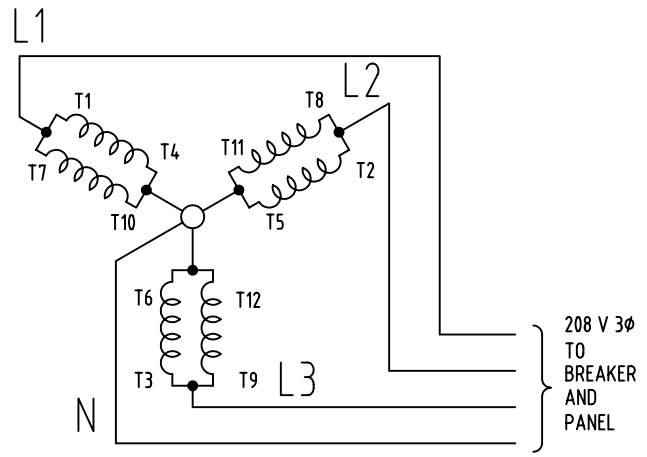

RECONNECTION DIAGRAMS

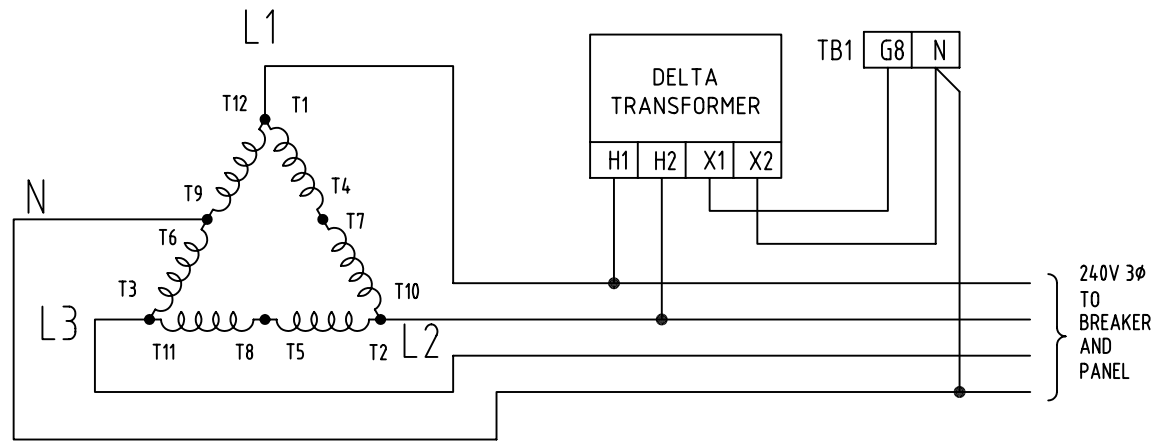

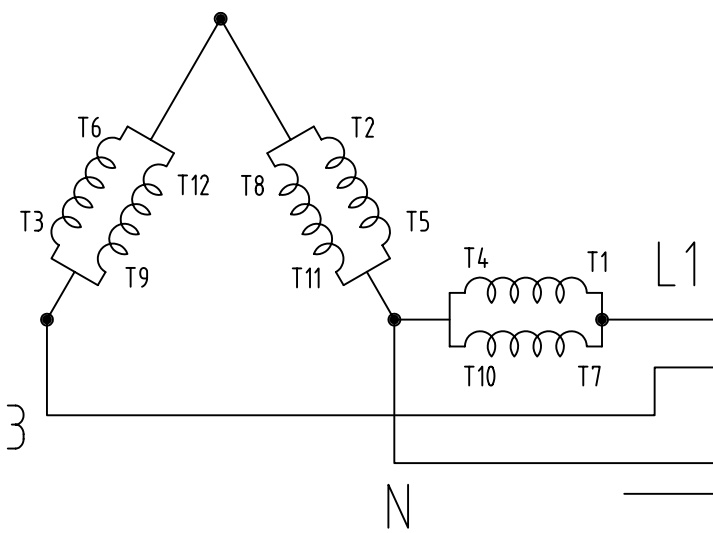

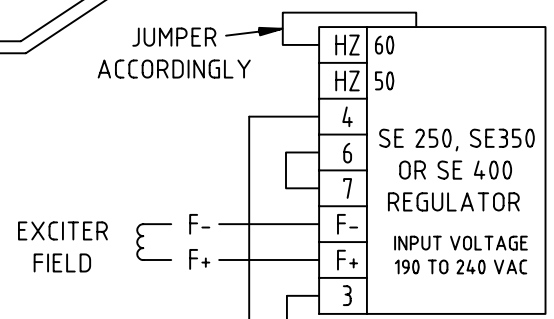

CONTROL PANEL

NOTE:
1. YELLOW/W WIRE IS CONNECTED TO LINE 2 WHEN UNIT IS WIRED FOR 3 PHASE OPERATION.
2. LT. BLUE/W WIRE IS CONNECTED TO LINE 2 CT WHEN UNIT IS WIRED FOR 3 PHASE OPERATION.
3. WIRE TRACE COLORS ARE AS FOLLOWS
   /R = RED STRIPE
   /Y = YELLOW STRIPE
   /W = WHITE STRIPE

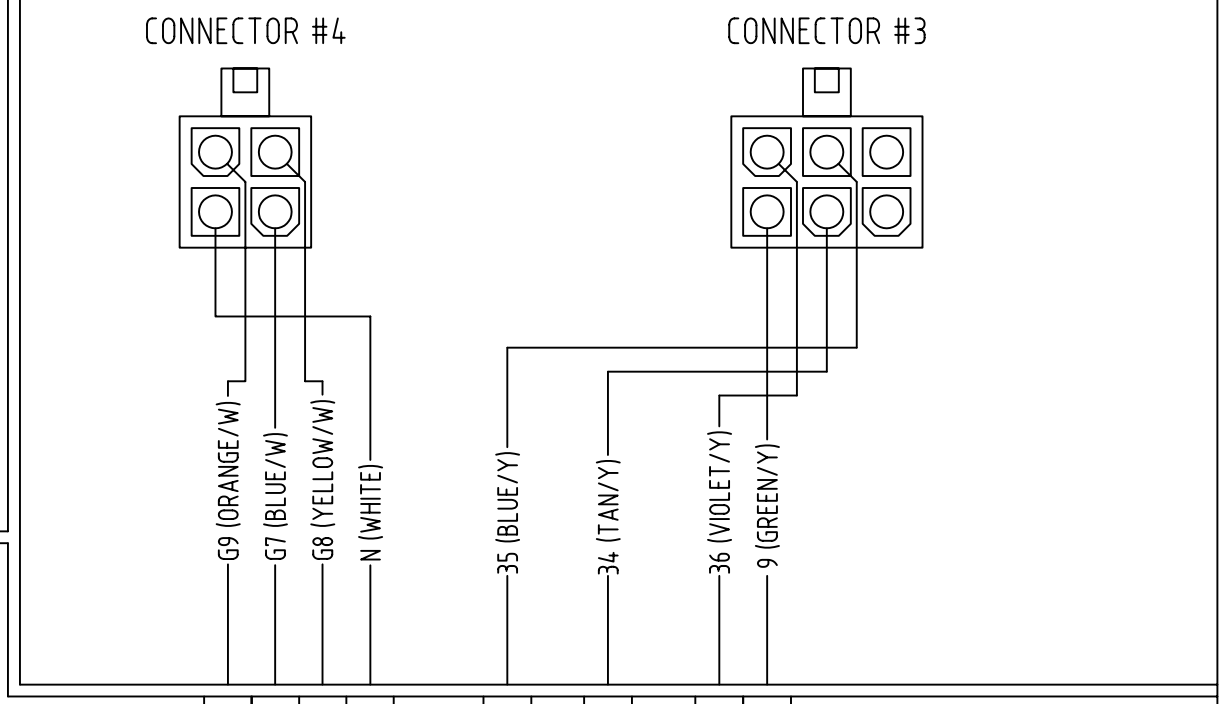

CONNECT TO LINE 2 FOR 3 ø Y OPERATION CONNECT TO X-FORMER X1 FOR 3 ø Δ OPERATION

INSTALL CT ON LINE 2 FOR 3 PHASE OPERATION

MAINLINE CIRCUIT BREAKER AS SPECIFIED

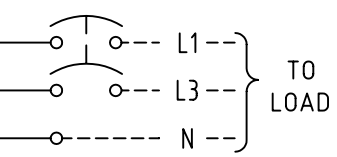

REVISE: ADDED TB2 FOR CUSTOMER CONNECTIONS, 8-27-2001 ECG
REVISE: REWIRE DELTA X-FORMER TO TB1 & ADDED WIRE #S, 4-8-2002 ECG

GENERATOR OUTLET BOX

NOTE:
1. TB2 IS LOCATED IN THE GENERATOR OUTLET BOX NEXT TO THE MAIN LINE CIRCUIT BEAKER.

CUSTOMER CONNECTIONS

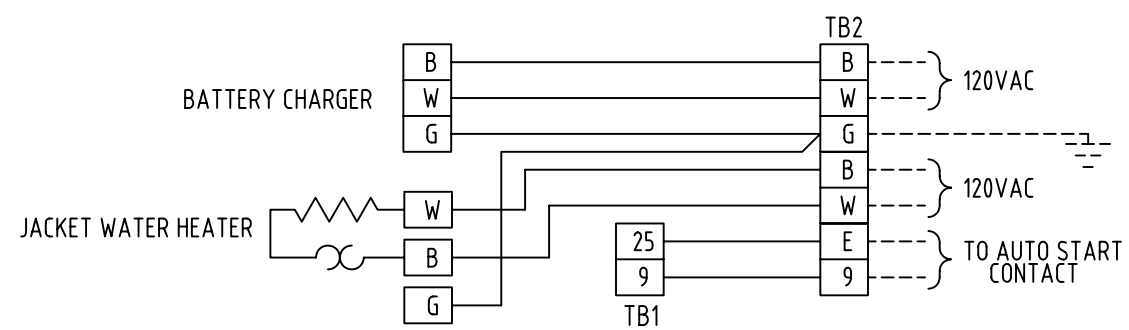

KATOLIGHT
MANKATO, MINNESOTA

AC DIAGRAM

SIZE	DATE	DWG NO
B	7-27-2001	819-B-10775

DESCRIPTION	"SP" SERIES	DWN BY	ECG	SHEET	1 OF 1

Katolight Service - Master Repair Manual - Page 1701

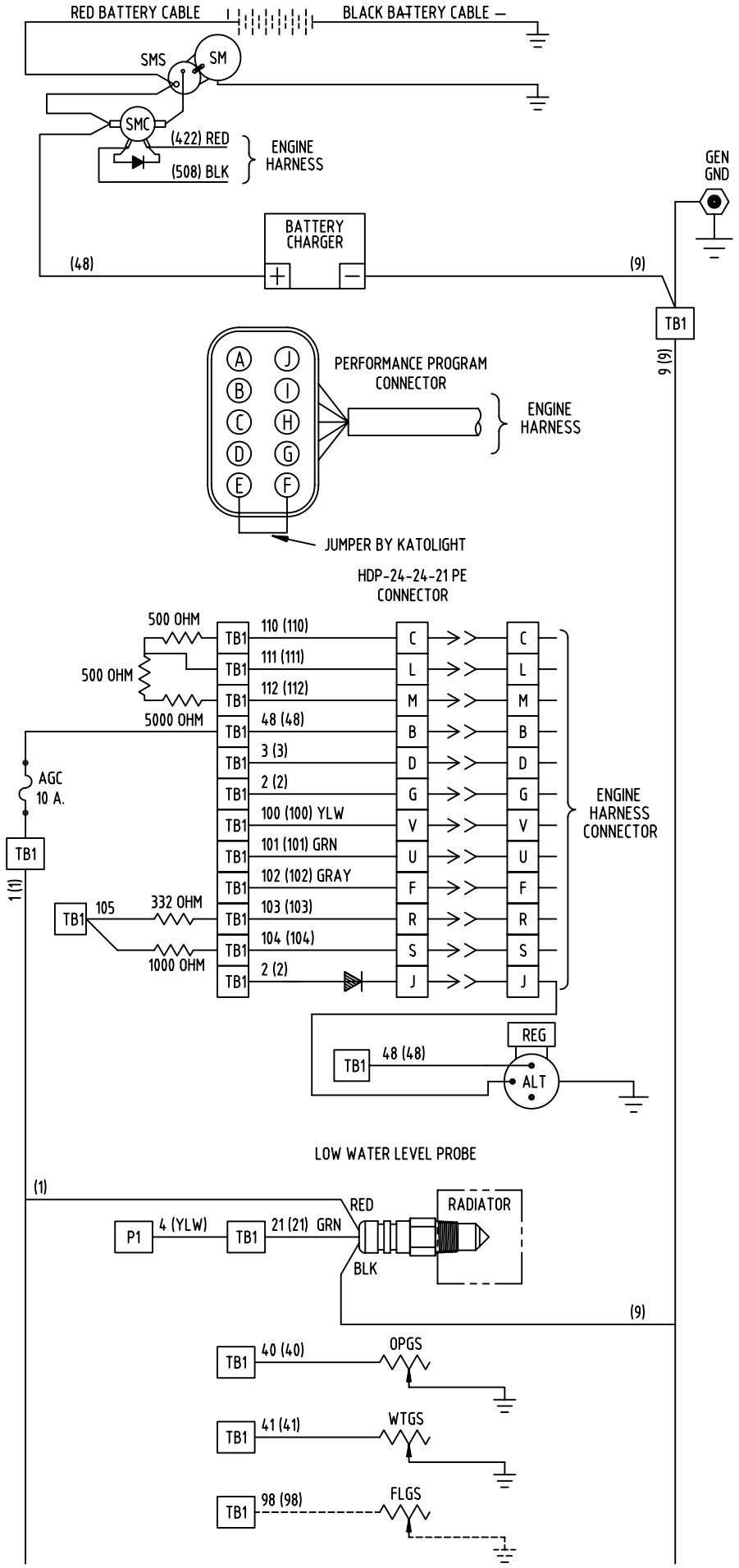

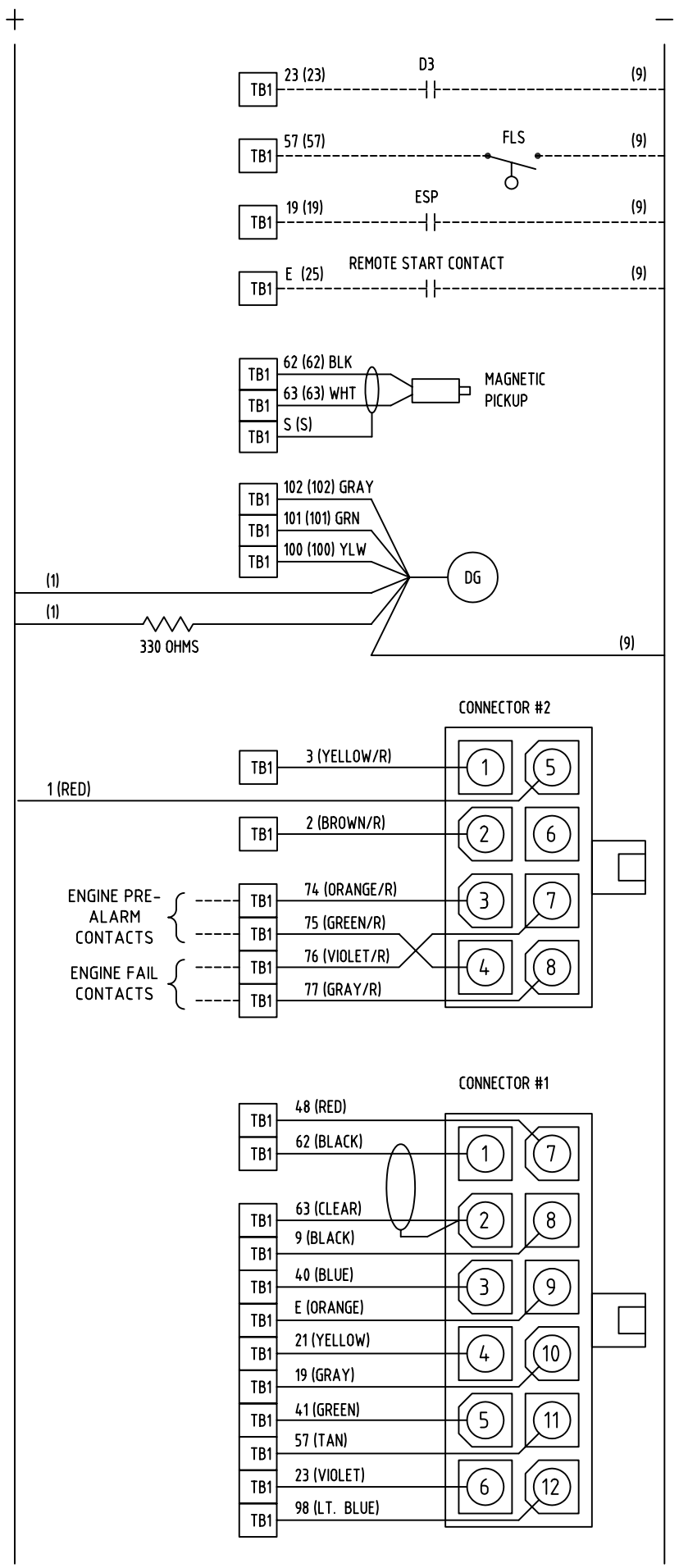

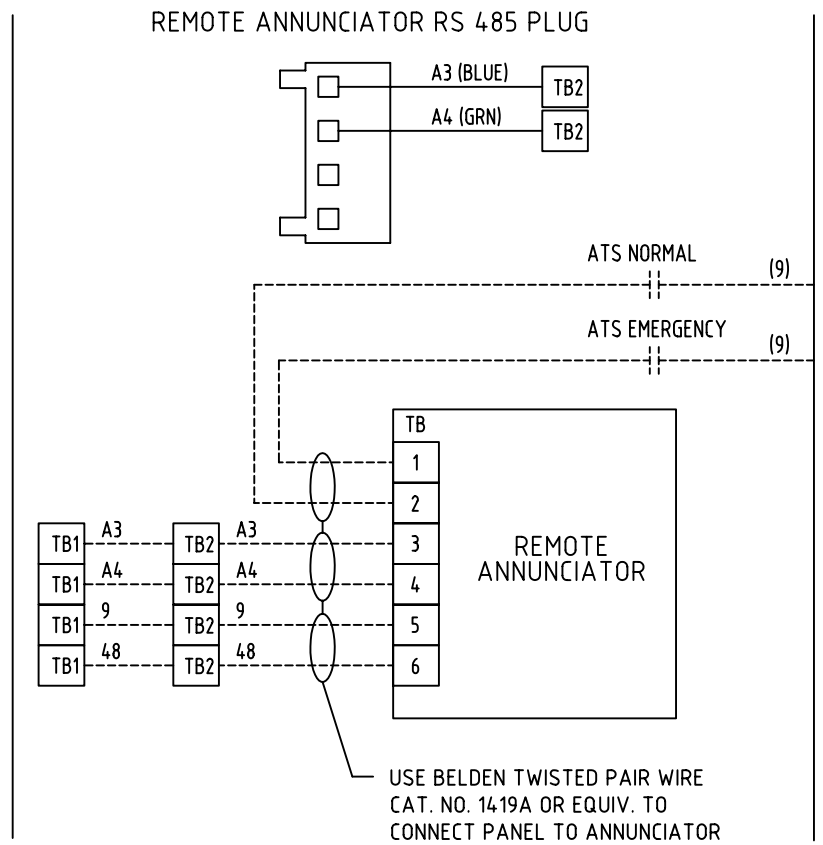

LEGEND

ALT	ALTERNATOR
D3	SPARE ALARM INPUT CONTACT
DG	DIAGNOSTIC GAUGE
ESP	EMERGENCY STOP PUSHBUTTON
FS	FUEL SOLENOID
LWL	LOW WATER LEVEL PROBE
OPGS	OIL PRESSURE GAUGE SENDER
SM	STARTER MOTOR
SMC	STARTER MOTOR COIL PILOT RELAY
SMS	STARTER MOTOR SOLENOID
TB1	TERMINAL BOARD 1
WTGS	WATER TEMPERATURE GAUGE SENDER

CONTROL WIRING LOGIC:

48 (RED)	UNFUSED BATTERY POSITIVE
2	ENERGIZED TO RUN
3	ENERGIZED TO START
19	EMERGENCY STOP
25	REMOTE START
9	GROUND

NOTE:

1. WIRE NUMBERS ARE IN PARENTHESIS.
2. ENGINE WIRING IS #16 GA UNLESS OTHERWISE SPECIFIED.
3. SHORT DASHED LINES (------) INDICATE CUSTOMER CONNECTION OR OPTIONAL EQUIPMENT.
4. DIESEL UNITS CONNECT FS AND DIODE, NATURAL GAS OR LP UNITS CONNECT IGN SYS. CUSTOMER MUST CONNECT FS.

KATOLIGHT
MANKATO, MINNESOTA

DC LADDER DIAGRAM

SIZE	DATE	DWG NO	
B	8-1-2001	819-B-11185	
DESCRIPTION	"SP" SERIES	DWN BY ECG	SHEET 1 OF 1

Katolight Service - Master Repair Manual - Page 1703

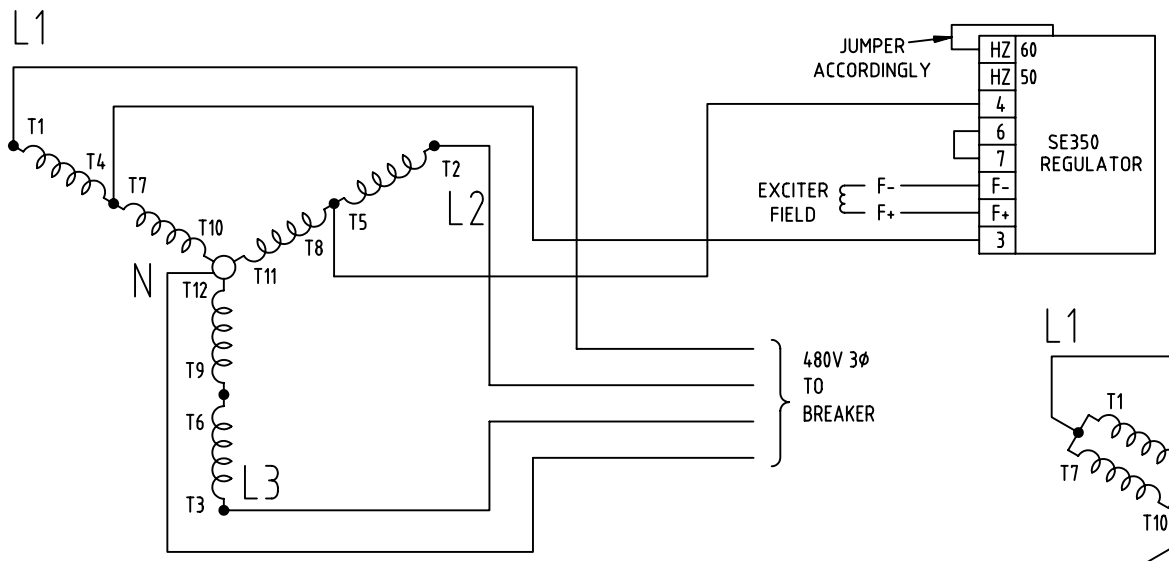

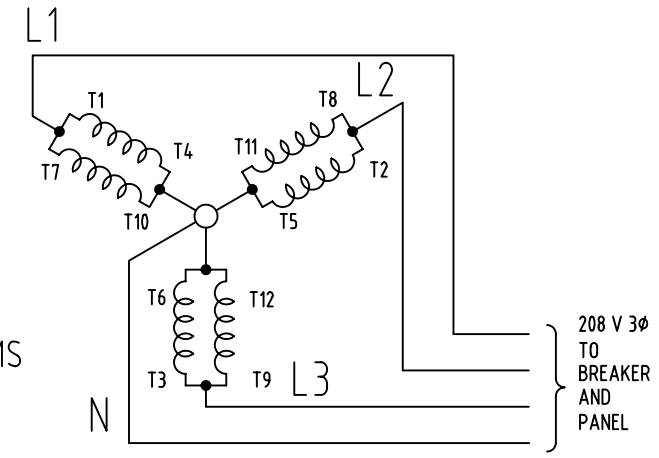

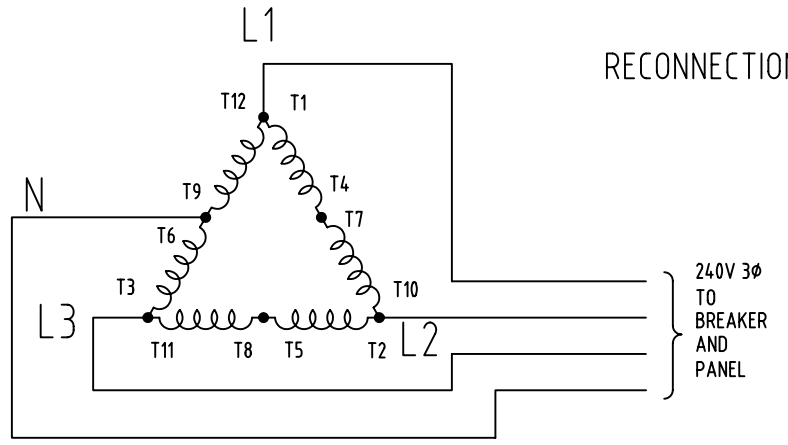

RECONNECTION DIAGRAMS

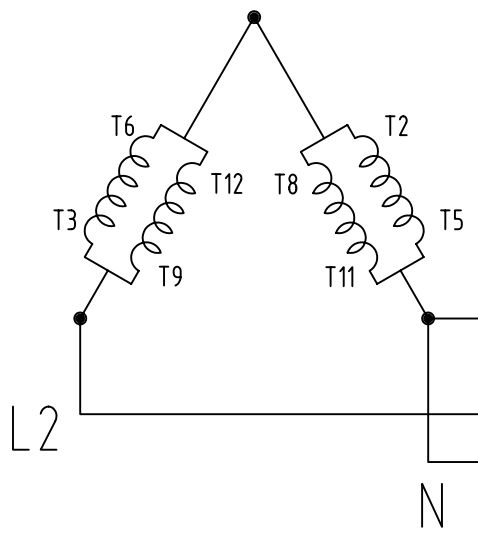

GENERATOR OUTLET BOX

NOTE:
1. TB2 IS LOCATED IN THE GENERATOR OUTLET BOX NEXT TO THE MAIN LINE CIRCUIT BEAKER.

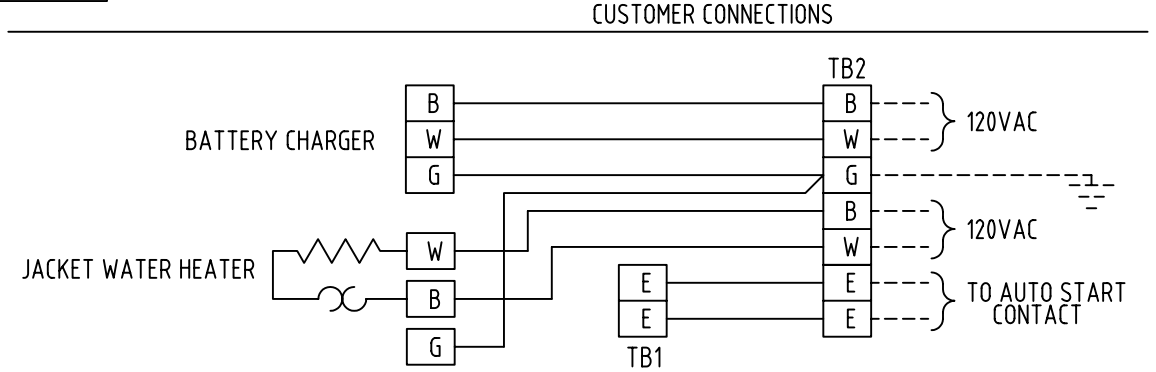

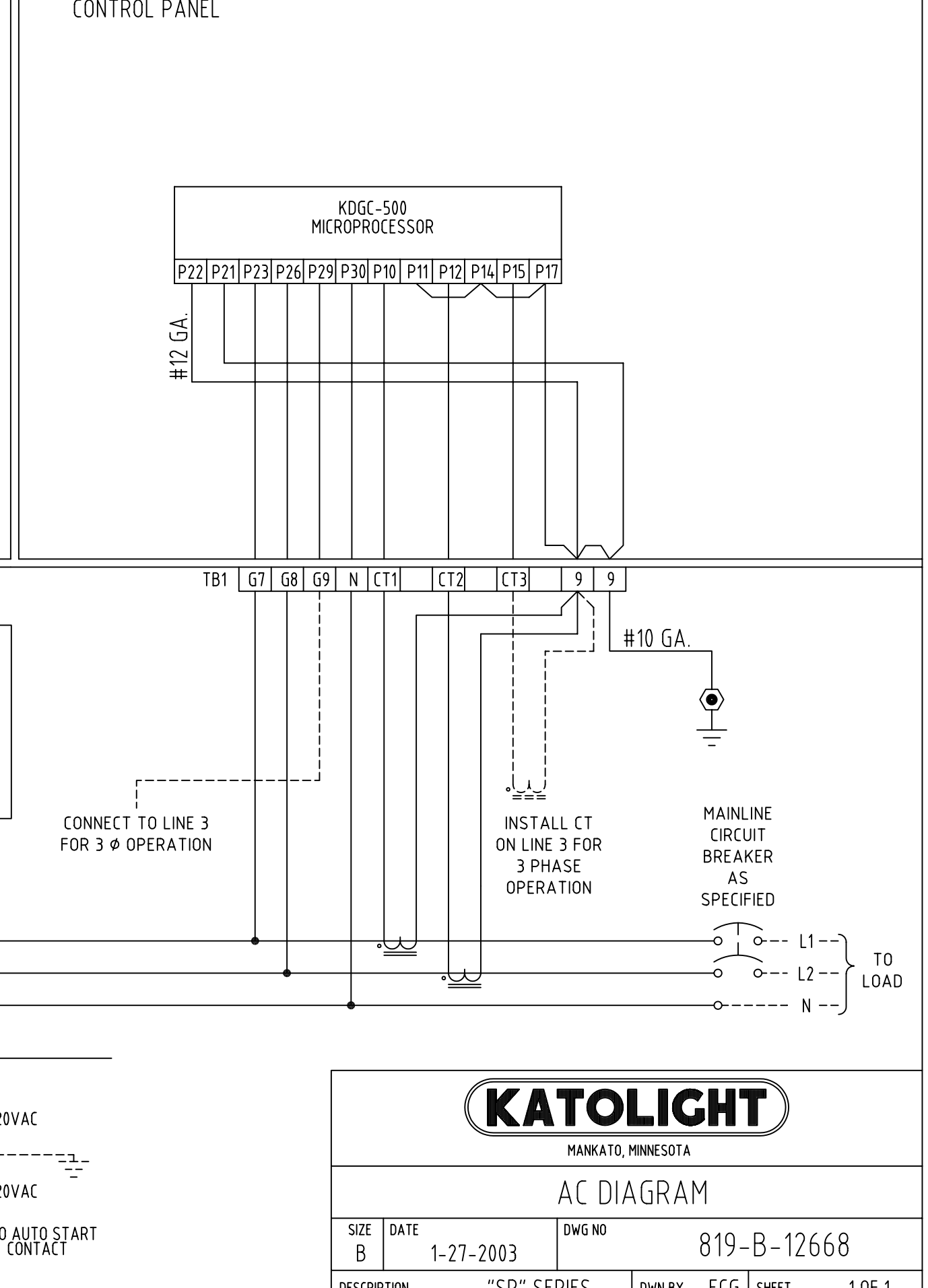

KATOLIGHT
MANKATO, MINNESOTA

AC DIAGRAM

SIZE	DATE	DWG NO
B	1-27-2003	819-B-12668

DESCRIPTION	"SP" SERIES	DWN BY	ECG	SHEET	1 OF 1

Katolight Service - Master Repair Manual - Page 1705

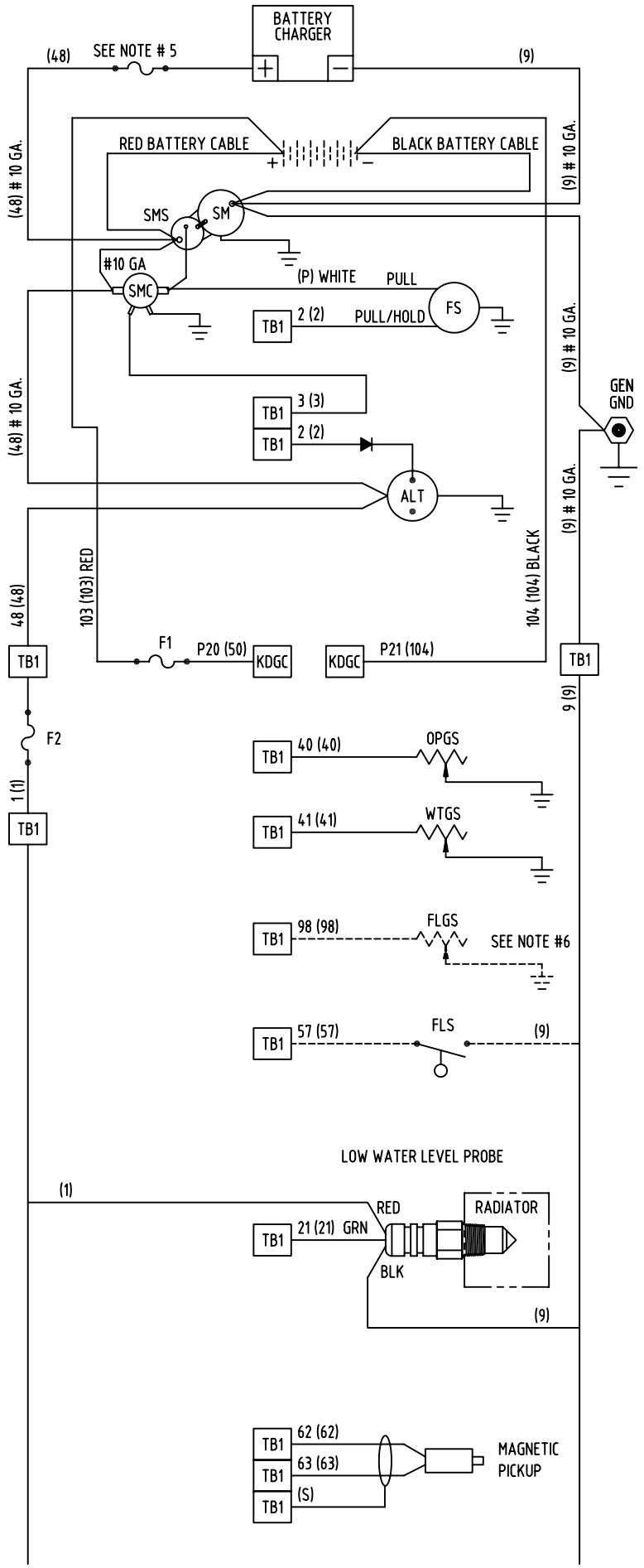

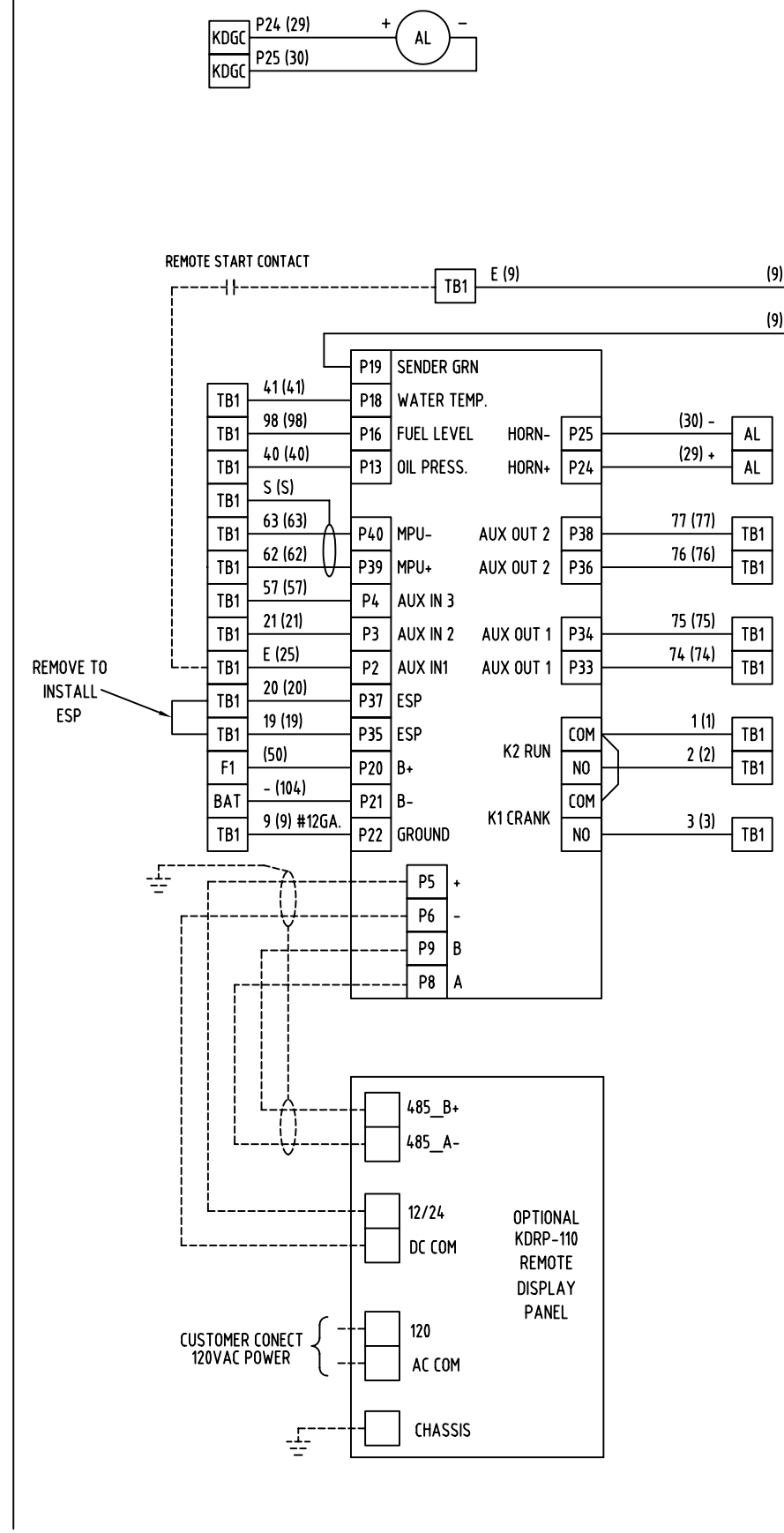

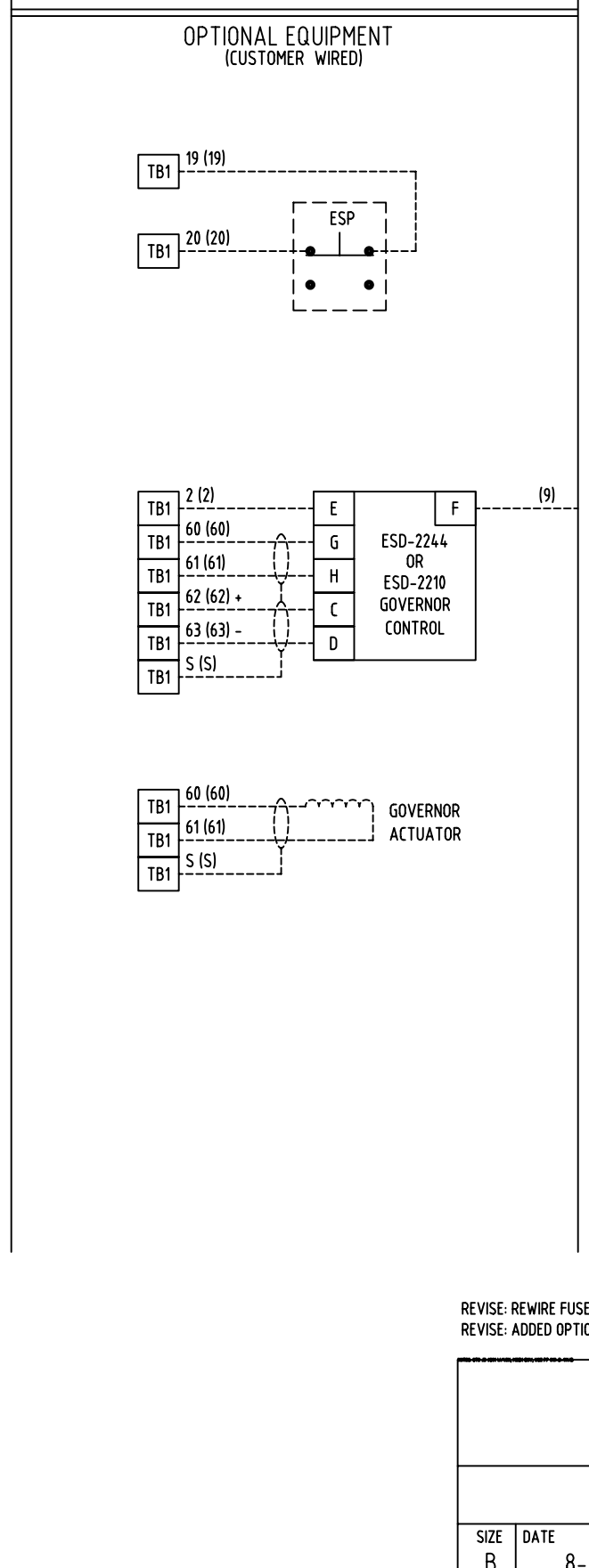

LEGEND

AL	ALARM
ALT	ALTERNATOR
ESL	EMERGENCY STOP LED
ESP	EMERGENCY STOP PUSHBUTTON
F1	CONTROLLER FUSE AGC 1 AMP
F2	PANEL FUSE AGC 15 AMP
FS	FUEL SOLENOID
GEN	GENERATOR
GND	GROUND
LWL	LOW WATER LEVEL PROBE
OPGS	OIL PRESSURE GAUGE SENDER
SM	STARTER MOTOR
SMC	STARTER MOTOR COIL PILOT RELAY
SMS	STARTER MOTOR SOLENOID
TB1	TERMINAL BOARD 1
WTGS	WATER TEMPERATURE GAUGE SENDER

CONTROL WIRING LOGIC:

48	UNFUSED BATTERY POSITIVE
1	15 AMP FUSED BATTERY POSITVE
2	ENERGIZED TO RUN
3	ENERGIZED TO START
19	EMERGENCY STOP
20	EMERGENCY STOP
25	REMOTE START
9	GROUND

NOTE:
1. WIRE NUMBERS ARE IN PARENTHESIS.
2. ENGINE WIRING IS #16 GA UNLESS OTHERWISE SPECIFIED.
3. CONTROL PANEL WIRING IS #16 GA UNLESS OTHERWISE SPECIFIED.
4. SHORT DASHED LINES (------) INDICATE CUSTOMER CONNECTION OR OPTIONAL EQUIPMENT.
5. BATTERY CHARGER FUSE ONLY WHEN REQUIRED OR SUPPLIED BY CHARGER MANUFACTURER.
6. FUEL LEVEL GAUGE SENDER REQUIRMENTS
   33 OHMS = FULL
   240 OHMS = EMPTY

REVISE: REWIRE FUSE # 1 TO WIRE #103 RUN FROM BATTERY +, 3-3-2003 ECG
REVISE: ADDED OPTIONAL ESD-2244 GOVERNOR, 5-13-2003 ECG

KATOLIGHT
MANKATO, MINNESOTA

DC LADDER DIAGRAM

SIZE	DATE	DWG NO
B	8-27-2002	819-B-12164

DESCRIPTION	DWN BY	SHEET
40- 220 kW JD "SP" SERIES	ECG	1 OF 1

Katolight Service - Master Repair Manual - Page 1707

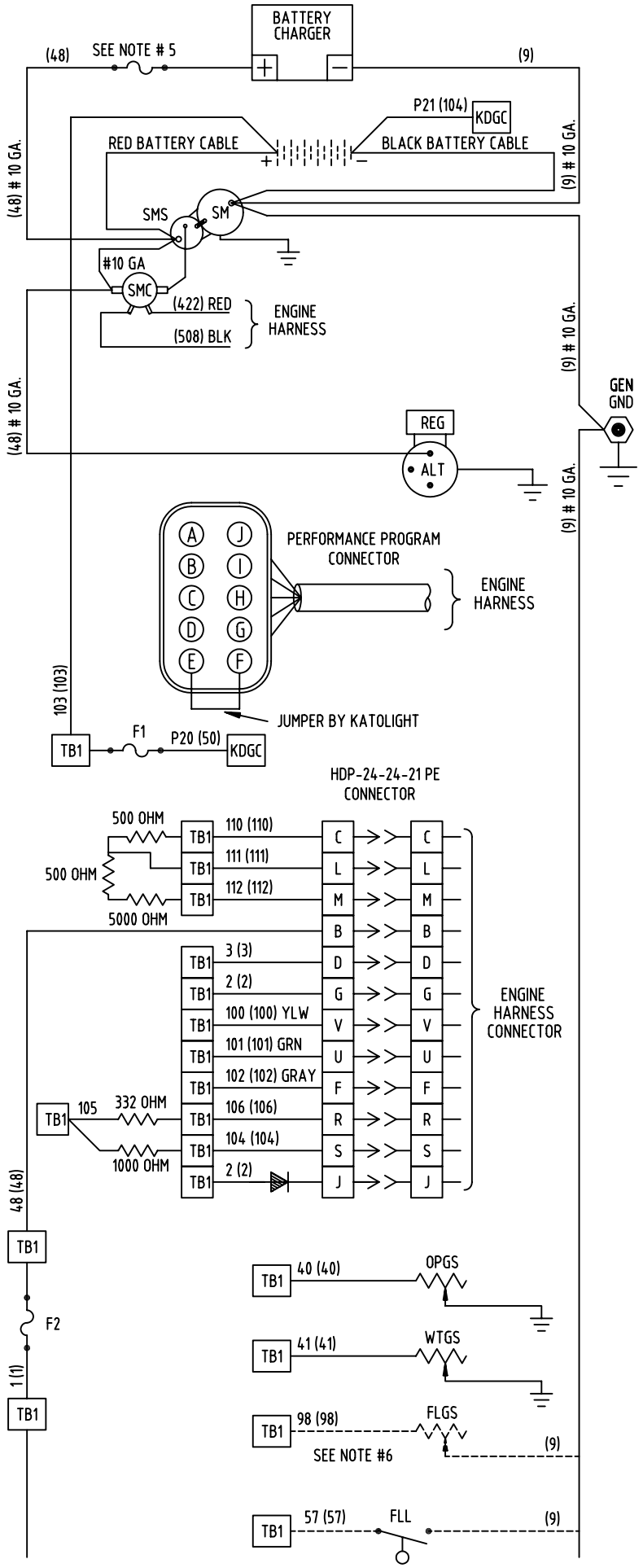

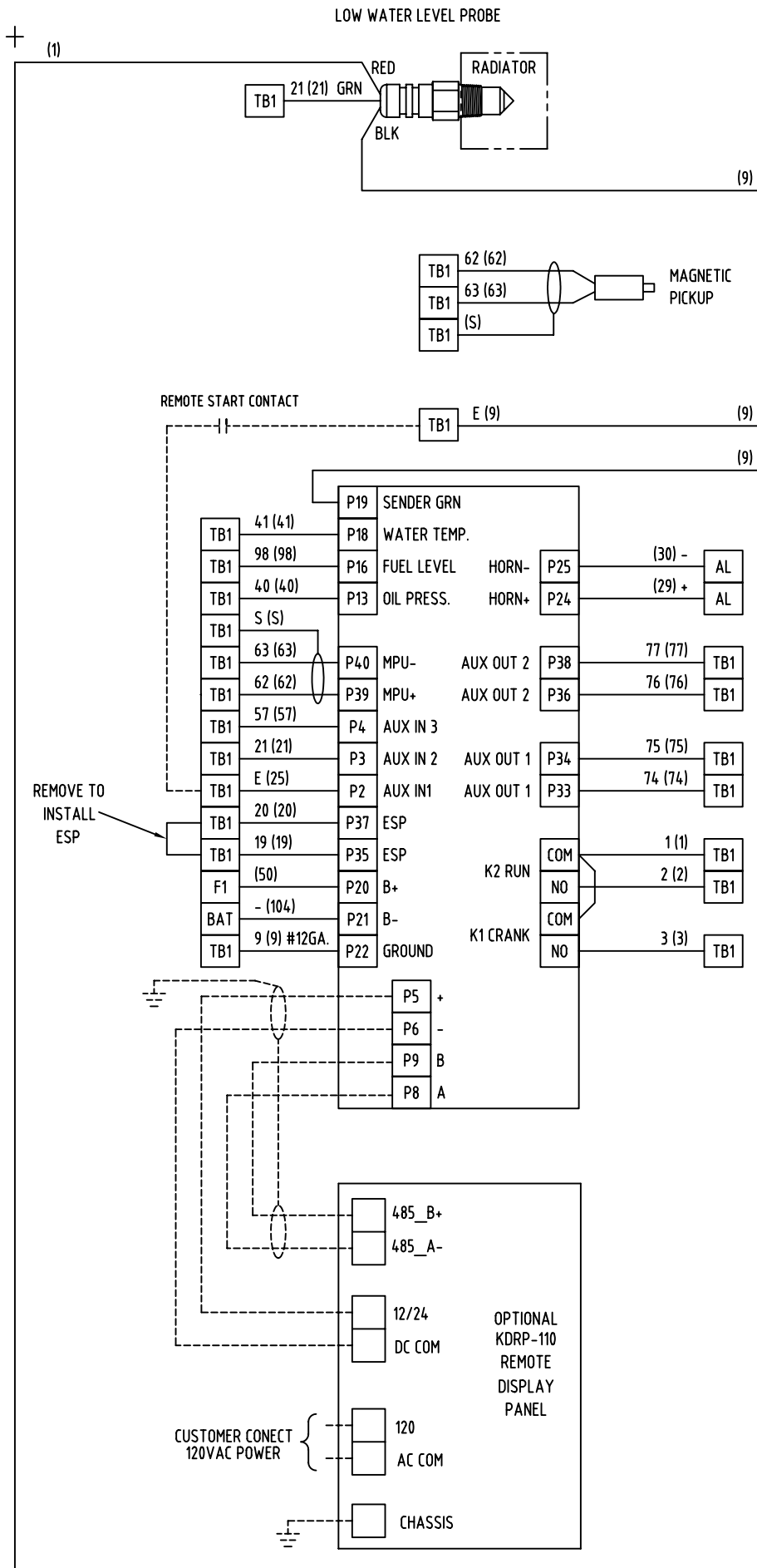

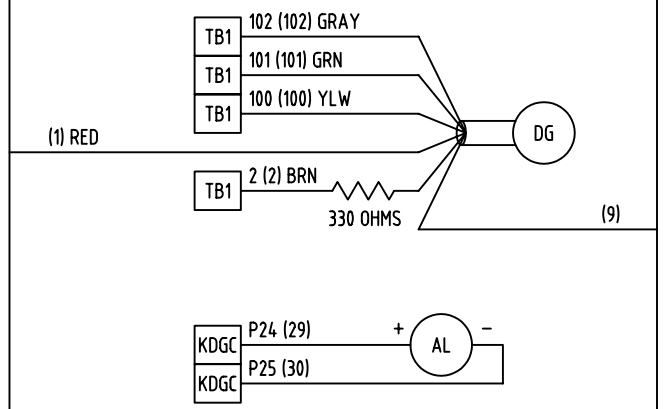

OPTIONAL EQUIPMENT
(CUSTOMER WIRED)

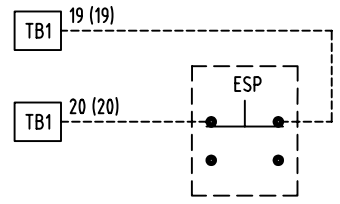

LEGEND

AL	ALARM
ALT	ALTERNATOR
DG	DIAGNOSTIC GAUGE
ESL	EMERGENCY STOP LED
ESP	EMERGENCY STOP PUSHBUTTON
F1	CONTROLLER FUSE AGC 1 AMP
F2	PANEL FUSE AGC 15 AMP
FS	FUEL SOLENOID
GEN	GENERATOR
GND	GROUND
LWL	LOW WATER LEVEL PROBE
OPGS	OIL PRESSURE GAUGE SENDER
SM	STARTER MOTOR
SMC	STARTER MOTOR COIL PILOT RELAY
SMS	STARTER MOTOR SOLENOID
TB1	TERMINAL BOARD 1
WTGS	WATER TEMPERATURE GAUGE SENDER

CONTROL WIRING LOGIC:

48	UNFUSED BATTERY POSITIVE
1	15 AMP FUSED BATTERY POSITVE
2	ENERGIZED TO RUN
3	ENERGIZED TO START
19	EMERGENCY STOP
20	EMERGENCY STOP
25	REMOTE START
9	GROUND

NOTE:
1. WIRE NUMBERS ARE IN PARENTHESIS.
2. ENGINE WIRING IS #16 GA UNLESS OTHERWISE SPECIFIED.
3. CONTROL PANEL WIRING IS #16 GA UNLESS OTHERWISE SPECIFIED.
4. SHORT DASHED LINES (------) INDICATE CUSTOMER CONNECTION OR OPTIONAL EQUIPMENT.
5. BATTERY CHARGER FUSE ONLY WHEN REQUIRED OR SUPPLIED BY CHARGER MANUFACTURER.
6. FUEL LEVEL GAUGE SENDER REQUIRMENTS
   33 OHMS = FULL
   240 OHMS = EMPTY

REVISE: REWIRE FUSE # 1 TO WIRE #103 RUN FROM BATTERY + & RENUMPER RESISTOR STRIP 104-106 ,3-3-2003 ECG

KATOLIGHT
MANKATO, MINNESOTA

DC LADDER DIAGRAM

SIZE	DATE	DWG NO	
B	8-27-2002	819-B-12167	
DESCRIPTION	250-400 kW JD "SP" SERIES	DWN BY ECG	SHEET 1 OF 1

Katolight Service - Master Repair Manual - Page 1709

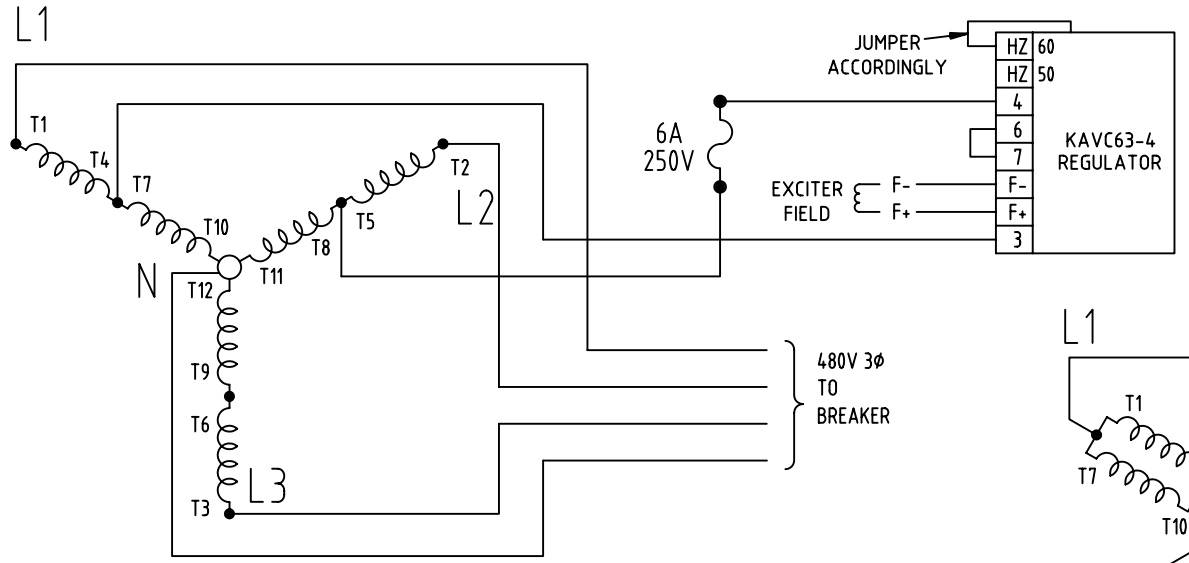

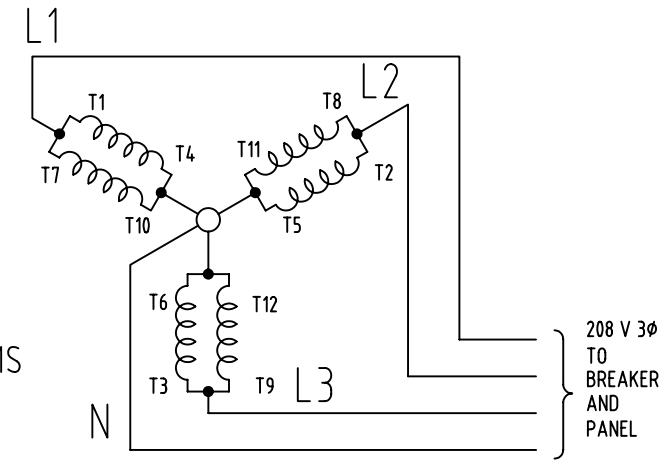

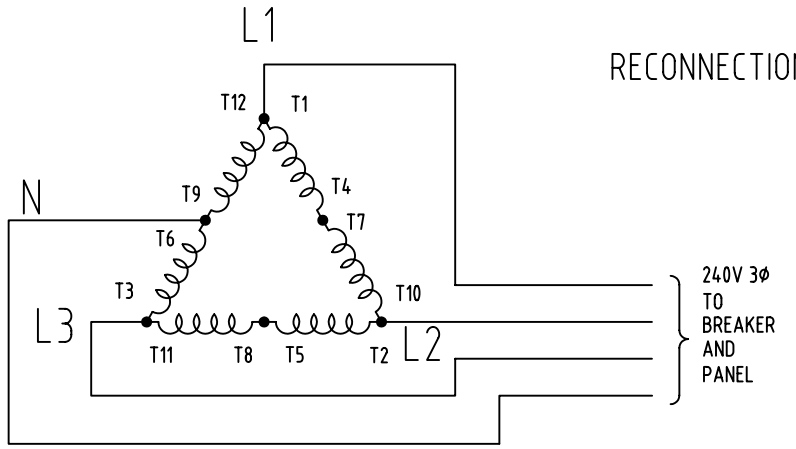

RECONNECTION DIAGRAMS

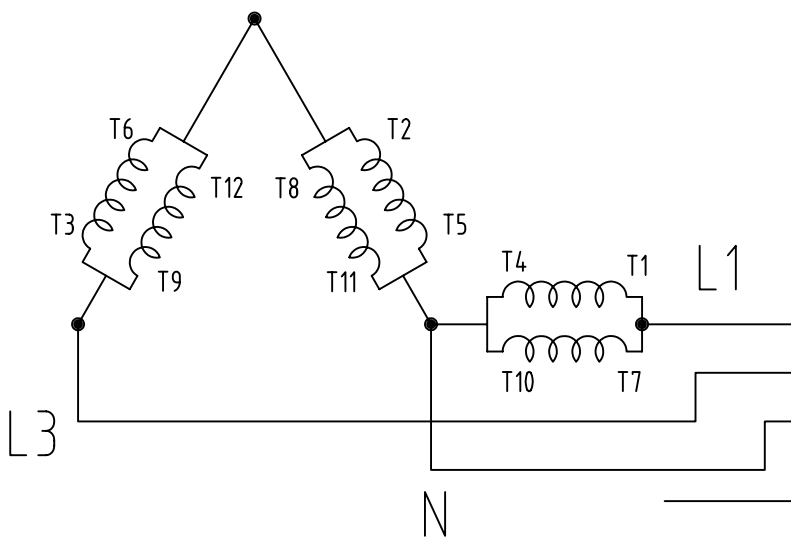

GENERATOR OUTLET BOX

NOTE:
1. TB2 IS LOCATED IN THE GENERATOR OUTLET BOX NEXT TO THE MAIN LINE CIRCUIT BEAKER.

CONTROL PANEL

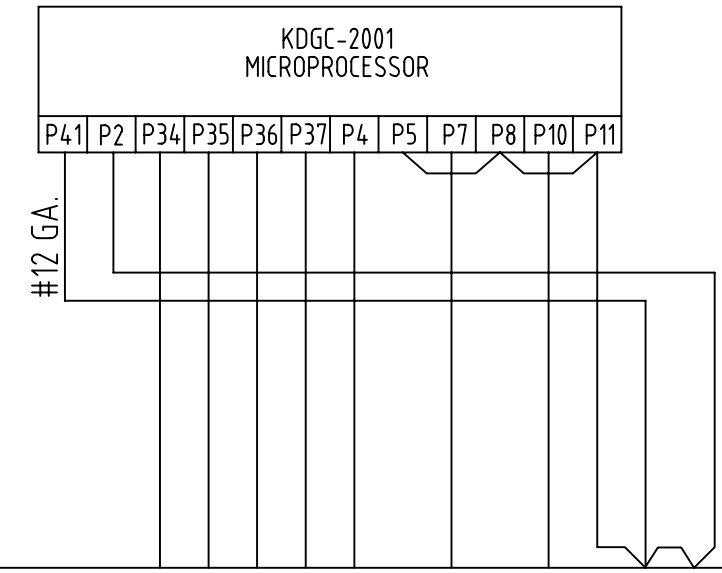

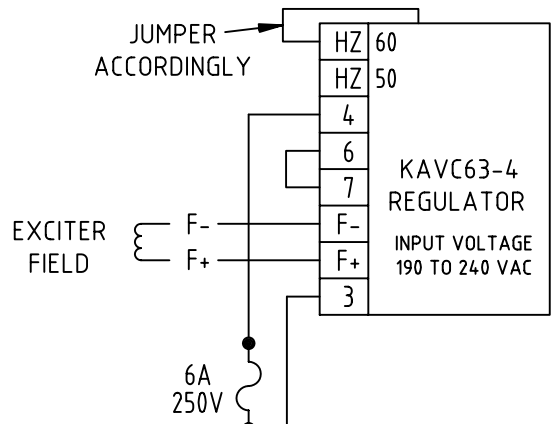

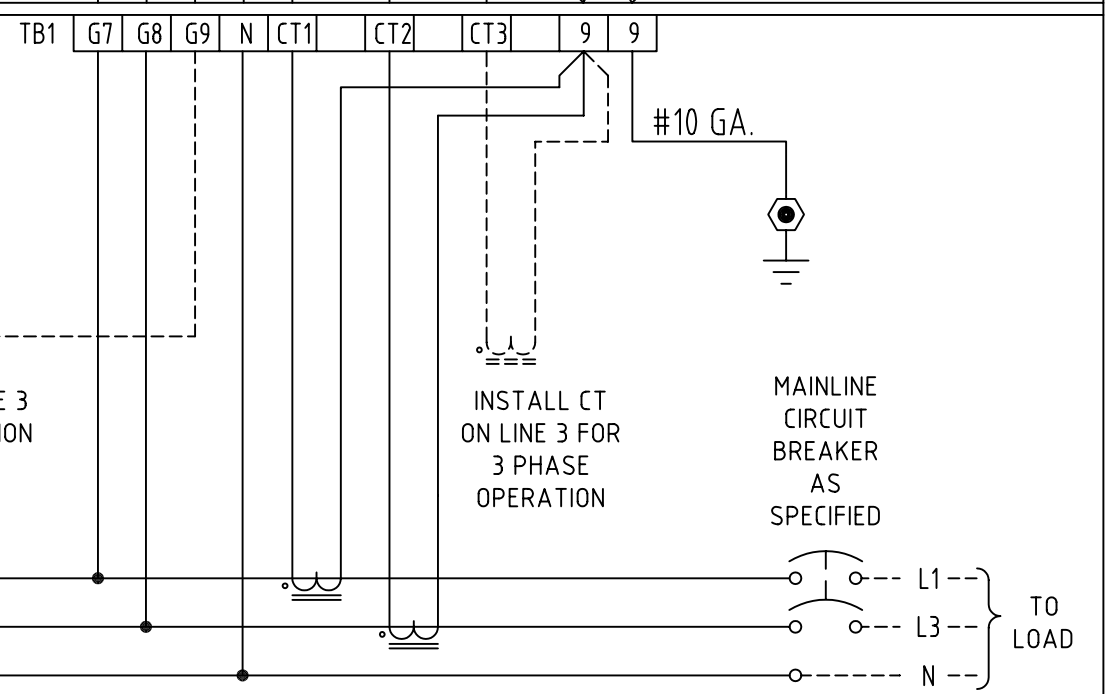

CUSTOMER CONNECTIONS

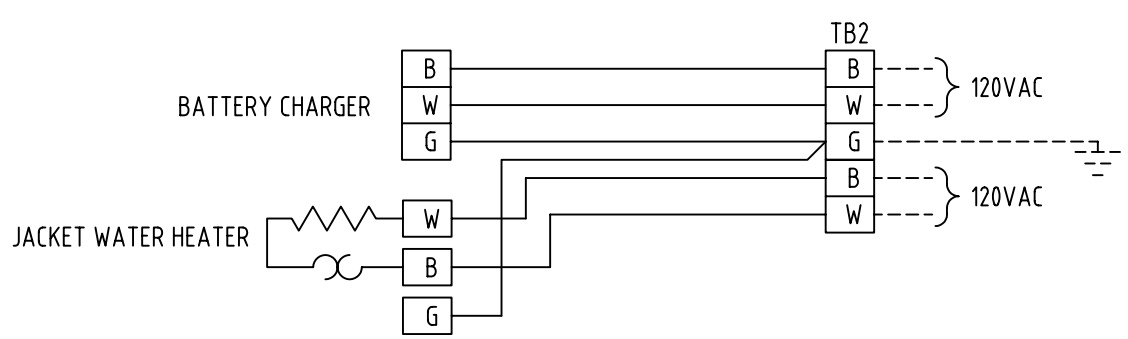

KATOLIGHT
MANKATO, MINNESOTA

AC DIAGRAM

SIZE	DATE	DWG NO
B	12-5-2002	819-B-12528

DESCRIPTION	DWN BY	SHEET
"SP" SERIES	ECG	1 OF 1

Katolight Service - Master Repair Manual - Page 1711

easYgen-1000
Genset Control

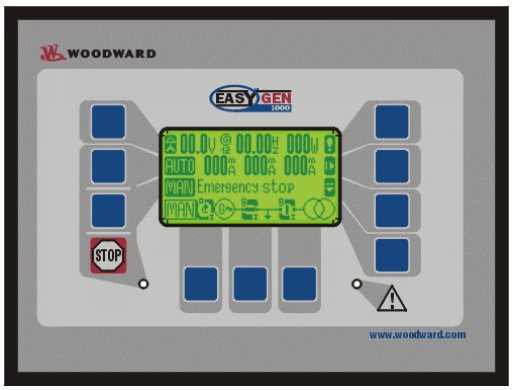



Installation
Software Version 1.0xxx

Manual 37203



WARNING

Read this entire manual and all other publications pertaining to the work to be performed before installing, operating, or servicing this equipment. Practice all plant and safety instructions and precautions. Failure to follow instructions can cause personal injury and/or property damage.

The engine, turbine, or other type of prime mover should be equipped with an overspeed (overtemperature, or overpressure, where applicable) shutdown device(s), that operates totally independently of the prime mover control device(s) to protect against runaway or damage to the engine, turbine, or other type of prime mover with possible personal injury or loss of life should the mechanical-hydraulic governor(s) or electric control(s), the actuator(s), fuel control(s), the driving mechanism(s), the linkage(s), or the controlled device(s) fail.



CAUTION

To prevent damage to a control system that uses an alternator or battery-charging device, make sure the charging device is turned off before disconnecting the battery from the system.

Electronic controls contain static-sensitive parts. Observe the following precautions to prevent damage to these parts.

- **Discharge body static before handling the control (with power to the control turned off, contact a grounded surface and maintain contact while handling the control).**
- **Avoid all plastic, vinyl, and Styrofoam (except antistatic versions) around printed circuit boards.**
- **Do not touch the components or conductors on a printed circuit board with your hands or with conductive devices.**

Important definitions



WARNING

Indicates a potentially hazardous situation that, if not avoided, could result in death or serious injury.



CAUTION

indicates a potentially hazardous situation that, if not avoided, could result in damage to equipment.



NOTE

Provides other helpful information that does not fall under the warning or caution categories.

Woodward Governor Company reserves the right to update any portion of this publication at any time. Information provided by Woodward Governor Company is believed to be correct and reliable. However, no responsibility is assumed by Woodward Governor Company unless otherwise expressly undertaken.

© Woodward Governor Company
All Rights Reserved.

Katolight Service - Master Repair Manual - Page 1714

Content

CHAPTER 1. GENERAL INFORMATION 6

CHAPTER 2. ELECTROSTATIC DISCHARGE AWARENESS 7

CHAPTER 3. HOUSING 8
Panel cut-out 8
Dimensions 9
Side view 10
Installation 11

CHAPTER 4. WIRING DIAGRAMS - OVERVIEW 12
Total overview 13
Application mode {0} 16
Application mode {1o} 17
Application mode {1oc} 18
Application mode {2oc} 19

CHAPTER 5. CONNECTIONS 20
Power supply 20
Voltage measuring (*FlexRange*) 21
Voltage measuring: Generator 21
Mains 25
Current measuring 29
Generator 29
Mains current ({2oc} only) 31
Power measuring 32
Pickup 33
Discrete inputs 34
Positive logic (usable alternatively to negative logic - see next chapter) 34
Negative logic (usable alternatively to positive logic - see previous chapter) 35
Relay outputs (control outputs and *LogicsManager*) 36
Analog inputs (*FlexIn*) 38
Interfaces 39
Overview 39
CAN bus (*FlexCAN*) 40
DPC - Direct Configuration Cable 40

CHAPTER 6. TECHNICAL DATA 41

CHAPTER 7. ACCURACY 44

CHAPTER 8. DECLARATION OF CONFORMITY 45

Katolight Service - Master Repair Manual - Page 1715

Illustrations and Tables

Illustrations

Figure 3-1: Housing - panel-board cut-out ... 8
Figure 3-2: Housing - dimensions ... 9
Figure 3-3: Side view - without clamps ... 10
Figure 3-4: Side view - with clamps ... 10
Figure 4-1: Wiring diagram - total overview ... 13
Figure 4-2: Wiring diagram - application mode {0} - base mode ... 16
Figure 4-3: Wiring diagram - application mode {1o} - 1 CB mode ... 17
Figure 4-4: Wiring diagram - application mode {1oc} - 1 CB mode ... 18
Figure 4-5: Wiring diagram - application mode {2oc} - 2 CB mode ... 19
Figure 5-1: Power supply ... 20
Figure 5-2: Power supply - crank waveform at maximum load ... 20
Figure 5-3: Voltage measuring (***FlexRange***) - generator ... 21
Figure 5-4: Voltage measuring (***FlexRange***) -generator, 3ph 4w ... 22
Figure 5-5: Voltage measuring (***FlexRange***) - generator, 3ph 3w ... 23
Figure 5-6: Voltage measuring (***FlexRange***) - generator, 1ph 3w ... 24
Figure 5-7: Voltage measuring (***FlexRange***) - generator, 1ph 2w ... 24
Figure 5-8: Voltage measuring (***FlexRange***) - mains ... 25
Figure 5-9: Voltage measuring (***FlexRange***) - mains, 3ph 4w ... 26
Figure 5-10: Voltage measuring (***FlexRange***) - mains, 3ph 3w ... 27
Figure 5-11: Voltage measuring (***FlexRange***) - mains, 1ph 3w ... 28
Figure 5-12: Voltage measuring (***FlexRange***) - mains, 1ph 2w ... 28
Figure 5-13: Current measuring - generator ... 29
Figure 5-14: Current measuring - generator, L1 L2 L3 ... 30
Figure 5-15: Current measuring - Generator, Phase Lx ... 30
Figure 5-16: Current measuring - mains current ... 31
Figure 5-17: Current measuring - generator, Phase Lx ... 31
Figure 5-18: Power measuring - direction of power ... 32
Figure 5-19: Pickup - principle overview ... 33
Figure 5-20: Pickup input ... 33
Figure 5-21: Minimal necessary input voltage depending on frequency ... 33
Figure 5-22: Discrete inputs - alarm/control inputs [type #1] - positive logic ... 34
Figure 5-23: Discrete inputs - alarm/control inputs [type #2] - positive logic ... 34
Figure 5-24: Discrete inputs - alarm/control inputs [type #1] - negative logic ... 35
Figure 5-25: Discrete input - alarm/control inputs [type #2] - negative logic ... 35
Figure 5-26: Relay outputs ... 36
Figure 5-27: Analog inputs (***FlexIn***) ... 38
Figure 5-28: Interfaces - overview ... 39
Figure 5-29: Interfaces - CAN bus (***FlexCAN***) ... 40
Figure 5-30: Interfaces - CAN bus - wiring of shielding ... 40

 © Woodward

Katolight Service - Master Repair Manual - Page 1716

Tables

Table 1-1: Manual - overview 6
Table 3-1: Housing - panel cut-out 8
Table 4-1: Terminal overview, part 1 14
Table 4-2: Terminal overview, part 2 15
Table 5-1: Power supply - terminal assignment 20
Table 5-2: Voltage measuring (***FlexRange***) - terminal assignment - generator voltage 21
Table 5-3: Voltage measuring (*FlexRange*) - terminal assignment - generator, 3ph 4w 22
Table 5-4: Voltage measuring (*FlexRange*) - terminal assignment - generator, 3ph 3w 23
Table 5-5: Voltage measuring (*FlexRange*) - terminal assignment - generator, 1ph 3w 24
Table 5-6: Voltage measuring (*FlexRange*) - terminal assignment - generator, 1ph 2w 24
Table 5-7: Voltage measuring (***FlexRange***) - terminal assignment - mains voltage 25
Table 5-8: Voltage measuring (*FlexRange*) - terminal assignment - mains, 3ph 4w 26
Table 5-9: Voltage measuring (*FlexRange*) - terminal assignment - mains, 3ph 3w 27
Table 5-10: Voltage measuring (*FlexRange*) - terminal assignment - mains, 1ph 3w 28
Table 5-11: Voltage measuring (*FlexRange*) - terminal assignment - mains, 1ph 2w 28
Table 5-12: Current measuring - terminal assignment - generator current 29
Table 5-13: Current measuring - terminal assignment - generator, L1 L2 L3 30
Table 5-14: Current measuring - terminal assignment - generator, Phase Lx 30
Table 5-15: Current measuring - terminal assignment - mains current 31
Table 5-16: current measuring - terminal assignment - generator, Phase Lx 31
Table 5-17: Pickup - terminal assignment 33
Table 5-18: Discrete input - terminal assignment - alarm/control input - positive logic 34
Table 5-19: Discrete input - terminal assignment - alarm/control inputs - negative logic 35
Table 5-20: Relay outputs - terminal assignment, part 1 36
Table 5-21: Relay outputs - terminal assignment, part 1 37
Table 5-22: Analog inputs (***FlexIn***) - terminal assignment 38
Table 5-23: Interfaces - connection overview 39

Katolight Service - Master Repair Manual - Page 1717

Chapter 1.
General Information

Type		English	German
easYgen-1000 Series			
easYgen-1000 - Installation	this manual ⇨	37203	GR37203
easYgen-1000 - Configuration		37204	GR37204
easYgen-1000 - Operation		37181	GR37181
easYgen-1000 - Application		37205	GR37205
easYgen-1000 - Interfaces		37262	GR37262
Additional Manuals			
IKD 1 - Manual		37135	GR37135
Discrete expansion board with 8 discrete inputs and 8 relay outputs that can be coupled via the CAN bus to the control unit. Evaluation of the discrete inputs as well as control of the relay outputs is done via the control unit.			
IKN 1 - Manual		37136	GR37136
20channel NiCrNi temperature scanner that monitors the temperature values for exceeding or falling below a threshold value, measured through senders on the IKN 1. A configured relay on the board of the IKN 1 will trip. The IKN 1 can be coupled with the control unit using the CAN bus to display measuring values as well as alarms.			
LeoPC - Manual		37146	GR37146
PC program for visualization, for configuration, for remote control, for data logging, for language upload, for alarm and user management and for management of the event recorder. This manual describes the use of the program.			
LeoPC - Manual		37164	GR37164
PC program for visualization, for configuration, for remote control, for data logging, for language upload, for alarm and user management and for management of the event recorder. This manual describes the programming of the program.			
GW 4 - Manual		37133	GR37133
Gateway for transferring the CAN bus to any other interface or bus.			
ST 3 - Manual		37112	GR37112
Control to govern the air fuel ratio of a gas engine. The ratio will be directly measured though a Lambda probe and controlled to a configured value.			

Table 1-1: Manual - overview

Intended Use The unit must only be operated as described in this manual. The prerequisite for a proper and safe operation of the product is correct transportation, storage, and installation as well as careful operation and maintenance.

NOTE

This manual has been developed for a unit fitted with all available options. Inputs/outputs, functions, configuration screens and other details described, which do not exist on your unit may be ignored.

The present manual has been prepared to enable the installation and commissioning of the unit. On account of the large variety of parameter settings, it is not possible to cover every possible combination. The manual is therefore only a guide. In case of incorrect entries or a total loss of functions, the default settings can be taken from the enclosed list of parameters.

© Woodward

Katolight Service - Master Repair Manual - Page 1718

Chapter 2.
Electrostatic Discharge Awareness

All electronic equipment is static-sensitive, some components more than others. To protect these components from static damage, you must take special precautions to minimize or eliminate electrostatic discharges.

Follow these precautions when working with or near the control.

1. Before doing maintenance on the electronic control, discharge the static electricity on your body to ground by touching and holding a grounded metal object (pipes, cabinets, equipment, etc.).

2. Avoid the build-up of static electricity on your body by not wearing clothing made of synthetic materials. Wear cotton or cotton-blend materials as much as possible because these do not store static electric charges as much as synthetics.

3. Keep plastic, vinyl, and Styrofoam materials (such as plastic or Styrofoam cups, cup holders, cigarette packages, cellophane wrappers, vinyl books or folders, plastic bottles, and plastic ash trays) away from the control, the modules, and the work area as much as possible.

4. **Opening the control cover may void the unit warranty.**
   Do not remove the printed circuit board (PCB) from the control cabinet unless absolutely necessary. If you must remove the PCB from the control cabinet, follow these precautions:

   - Do not touch any part of the PCB except the edges.
   - Do not touch the electrical conductors, the connectors, or the components with conductive devices or with your hands.
   - When replacing a PCB, keep the new PCB in the plastic antistatic protective bag it comes in until you are ready to install it. Immediately after removing the old PCB from the control cabinet, place it in the antistatic protective bag.



CAUTION

To prevent damage to electronic components caused by improper handling, read and observe the precautions in Woodward manual 82715, *Guide for Handling and Protection of Electronic Controls, Printed Circuit Boards, and Modules.*

Katolight Service - Master Repair Manual - Page 1719

Chapter 3.
Housing

Panel cut-out

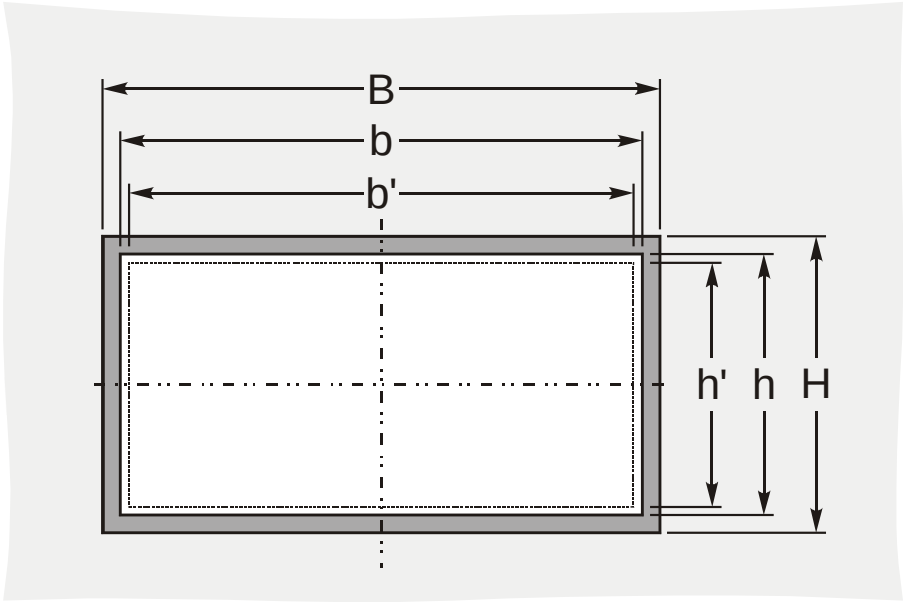

Figure 3-1: Housing - panel-board cut-out

Measure	Description			Tolerance
H	Height	Total	144 mm	---
h		Panel cut-out	138 mm	+ 1.0 mm
h'		Housing dimension	136 mm	
B	Width	Total	192 mm	---
b		Panel cut-out	186 mm	+ 1.1 mm
b'		Housing dimension	185 mm	
	Depth	Total	60.5	---

Table 3-1: Housing - panel cut-out

© Woodward

Katolight Service - Master Repair Manual - Page 1720

Dimensions

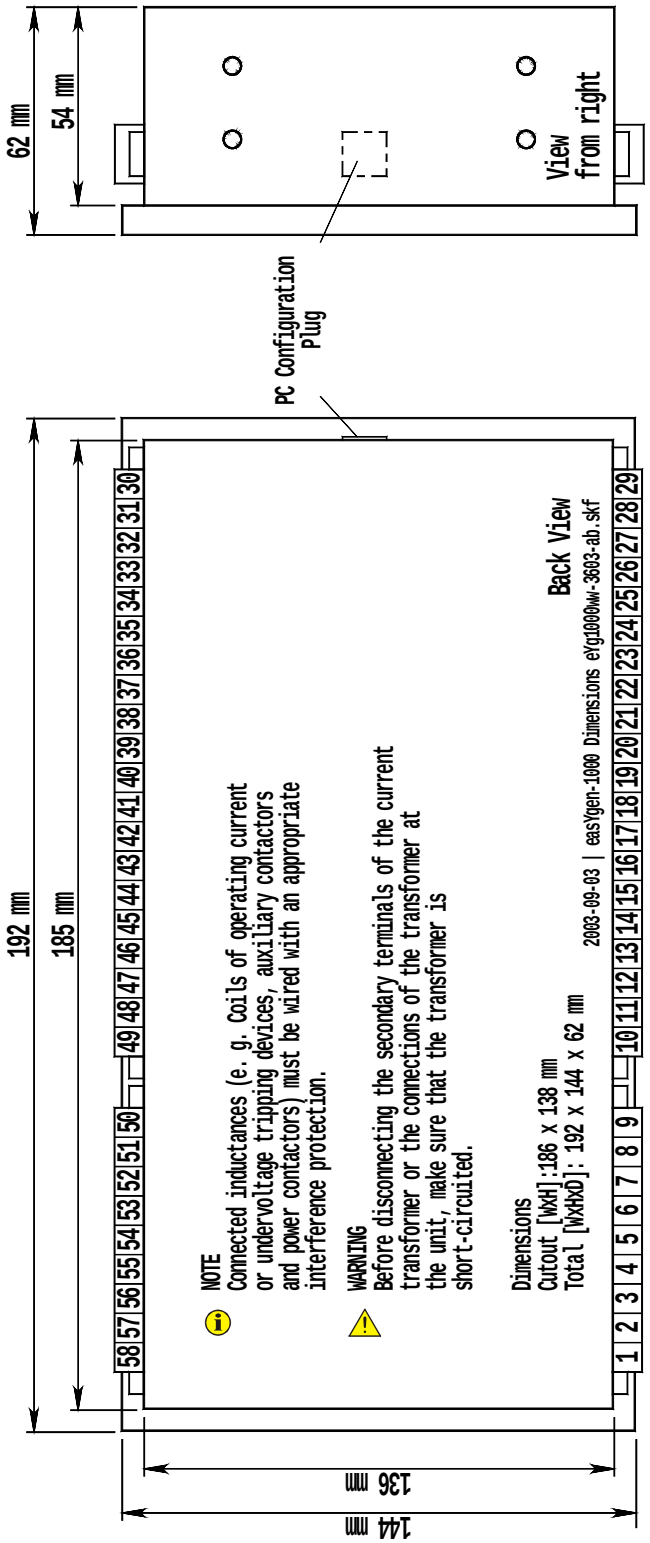

Figure 3-2: Housing - dimensions

Katolight Service - Master Repair Manual - Page 1721

Side view

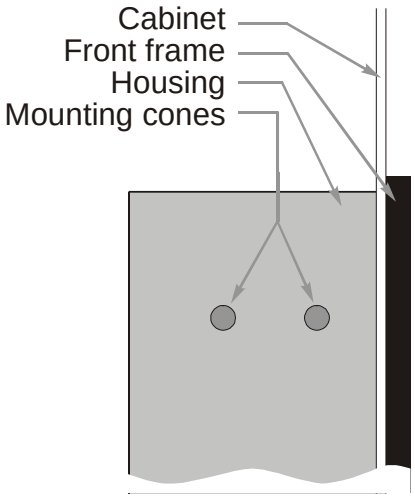

Figure 3-3: Side view - without clamps

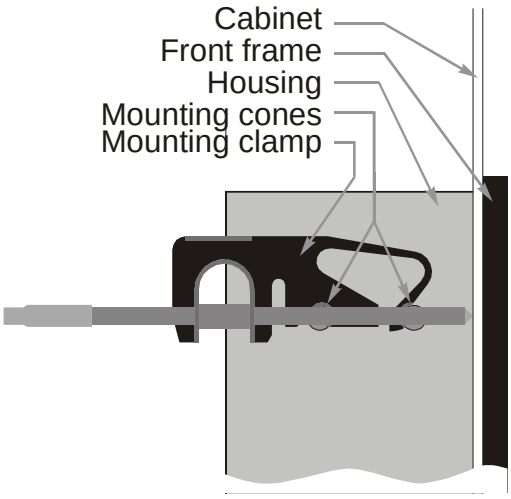

Figure 3-4: Side view - with clamps

© Woodward

Katolight Service - Master Repair Manual - Page 1722

Installation

For installation into a panel door please proceed as follows:

1. **Panel cut-out**
   Cut out the panel according to the dimensions in Figure 3-2.

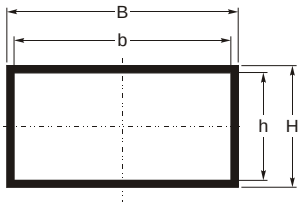

2. **Remove terminals**
   Loose the side screw and remove the wiring terminals from the unit.

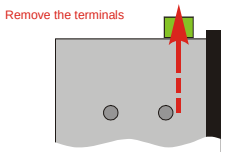

3. **Insert unit into cut-out**
   Insert the unit into the panel cut-out. Verify that the unit fits correctly in the cut-out. If the panel cut-out is not big enough, enlarge it accordingly.

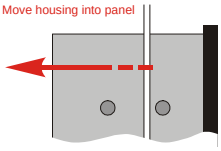

4. **Attach mounting clamps**
   Rotate clamps according to the picture on the right until they snap into the mounting cones.

a)



b)

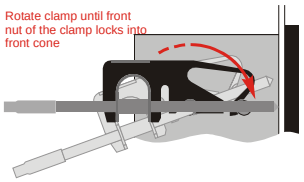

5. **Screw clamps**
   Tighten the screw clamps until the housing is pressed and fixed against the panel. Be careful not to over tighten the clamps which can unsnap the frame from the housing. If this happens remove the unit from the panel and reattach the frame by pressing firmly against the housing.

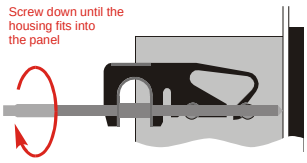

6. **Reattach terminals**
   Reattach the green wiring terminals, using the side screw to secure.

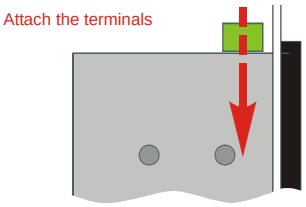

Note: Using the gasket kit (P/N 8923-1043) increases the IP protection from IP42 to IP54 from front. Mounting of the gasket is described in the manual supplied with the gasket kit.

Katolight Service - Master Repair Manual - Page 1723

Chapter 4.
Wiring Diagrams - Overview

NOTE

Please see manual 37181 "Operations Manual" for selection of the application mode. Depending on this setting different terminals will be used.

- Application mode {0} - [BM] - Base Mode - page 16
  - Measuring of engine/generator parameters (e. g. voltages, currents, coolant temp., oil pressure, etc.)
  - Engine start/stop

- Application mode {1o} - [GCB open] - 1-CB-Mode - page 17
  - Measuring of engine/generator parameters (e. g. voltages, currents, coolant temp., oil pressure, etc.)
  - Engine start/stop
  - Engine/generator protection (relay output to open GCB)

- Application mode {1oc} - [GCB open/close] - 1-CB-Mode - page 18
  - Measuring of engine/generator parameters (e. g. voltages, currents, coolant temp., oil pressure, etc.)
  - Engine start/stop
  - Engine/generator protection (relay output to open GCB)
  - GCB operation (relay output to close GCB)

- Application mode {2oc} - [GCB/MCB open/close] - 2-CB-Mode - page 19
  - Measuring of engine/generator parameters (e. g. voltages, currents, coolant temp., oil pressure, etc.)
  - Engine start/stop
  - Engine/generator protection (relay output to open GCB)
  - GCB operation (relay output to close GCB)
  - MCB operation (relay output to open and close the MCB)
  - Mains failure detection (AMF auto mains failure operation) and automatic engine start/stop

© Woodward

Total overview

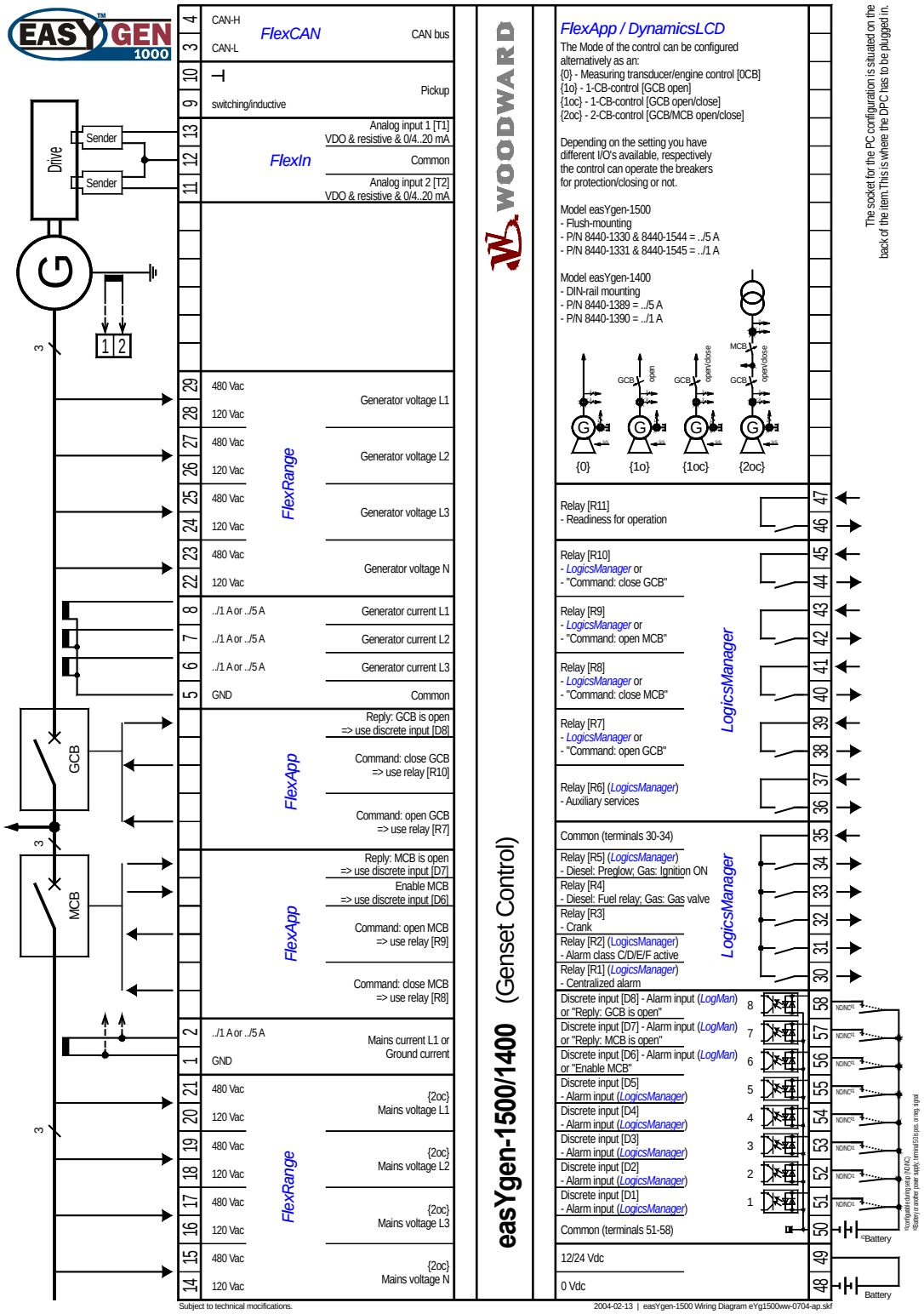

Figure 4-1: Wiring diagram - total overview

Katolight Service - Master Repair Manual - Page 1725

Wiring differences depending on application mode selection

The control can be programmed for one of four possible application modes. Depending on which mode is selected, certain terminals may have a different function. The following table lists all of the control terminals and their associated function for each of the four application modes.

Term.	Description	Type	Hardware	 {0} at page 16	 {1o} at page 17	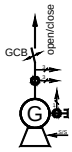 {1oc} at page 18	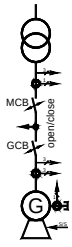 {2oc} at page 19
1	Ground current #NYI	Measure	GND	✓	✓	✓	✓ #CF alternatively ✓ #CF
2			../1 A or ../5 A #A				
1	Mains current	Measure	GND	---	---	---	
2			L1: ../1 A or ../5 A #A				
3	CAN bus	Interface	CAN-L	✓	✓	✓	✓
4			CAN-H				
5	Generator current	Measure	GND	✓	✓	✓	✓
6			L3: ../1 A or ../5 A #A				
7			L2: ../1 A or ../5 A #A				
8			L1: ../1 A or ../5 A #A				
9	Pickup (magnetic MPU, discrete)	Measure	inductive/switching	✓	✓	✓	✓
10			GND				
11	Analog input	Measure	AI [T2] - alternat. #CF	✓	✓	✓	✓
12			GND				
13			AI [T1] - alternat. #CF				
14	Mains voltage	Measure	N: 120 Vac	---	---	---	✓
15			N: 480 Vac				
16			L3: 120 Vac				
17			L3: 480 Vac				
18			L2: 120 Vac				
19			L2: 480 Vac				
20			L1: 120 Vac				
21			L1: 480 Vac				
22	Generator voltage	Measure	N: 120 Vac	✓	✓	✓	✓
23			N: 480 Vac				
24			L3: 120 Vac				
25			L3: 480 Vac				
26			L2: 120 Vac				
27			L2: 480 Vac				
28			L1: 120 Vac				
29			L1: 480 Vac				

#A - alternatively (different hardware); #NYI - not yet implemented; #CF - selection during and through configuration

Table 4-1: Terminal overview, part 1

© Woodward

Katolight Service - Master Repair Manual - Page 1726

Term.	Description	Type	Hardware	 {0} at page 16	 {1o} at page 17	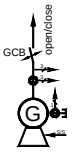 {1oc} at page 18	 {2oc} at page 19
30	Relay [R1]	Relay	Make contact (NO)	*LogMa* #R	*LogMa* #R	*LogMa* #R	*LogMa* #R
31	Relay [R2]		Make contact (NO)	*LogMa* #R	*LogMa* #R	*LogMa* #R	*LogMa* #R
32	Relay [R3]		Make contact (NO)	Crank			
33	Relay [R4]		Make contact (NO)	Diesel: Fuel magnet; Gas: Gas valve			
34	Relay [R5]		Make contact (NO)	*LogMa* #R			
35	Common		Common	✓	✓	✓	✓
36	Relay [R6]	Relay	Root	Auxiliary services			
37			Make contact (NO)				
38	Relay [R7]	Relay	Root	*LogMa* #R	Command: open GCB		
39			Make contact (NO)				
40	Relay [R8]	Relay	Root	*LogMa* #R	*LogMa* #R	*LogMa* #R	Command: close MCB
41			Make contact (NO)				
42	Relay [R9]	Relay	Root	*LogMa* #R	*LogMa* #R	*LogMa* #R	Command: open MCB
43			Make contact (NO)				
44	Relay [R10]	Relay	Root	*LogMa* #R	*LogMa* #R	Command: close GCB	
45			Make contact (NO)				
46	Relay [R11]	Relay	Root	Readiness for operation			
47			Make contact (NO)				
48	Power supply	Supply	0 Vdc	✓	✓	✓	✓
49			12/24 Vdc				
50	Common	Input	Common	✓	✓	✓	✓
51	Discrete input [D1]		Contact	*LogMa* #D	*LogMa* #D	*LogMa* #D	*LogMa* #D
52	Discrete input [D2]		Contact	*LogMa* #D	*LogMa* #D	*LogMa* #D	*LogMa* #D
53	Discrete input [D3]		Contact	*LogMa* #D	*LogMa* #D	*LogMa* #D	*LogMa* #D
54	Discrete input [D4]		Contact	*LogMa* #D	*LogMa* #D	*LogMa* #D	*LogMa* #D
55	Discrete input [D5]		Contact	*LogMa* #D	*LogMa* #D	*LogMa* #D	*LogMa* #D
56	Discrete input [D6]		Contact	*LogMa* #D	*LogMa* #D	*LogMa* #D	Enab.MCB
57	Discrete input [D7]		Contact	*LogMa* #D	*LogMa* #D	*LogMa* #D	Repl:MCB
58	Discrete input [D8]		Contact	*LogMa* #D	*LogMa* #D	Reply: GCB is closed	

#R - *LogMa* - Relay Manager (via the function ***LogicsManager*** the relays can be programmed freely)
#D - *LogMa* - Discrete Input Manager (via the function ***LogicsManager*** this discrete inputs can be programmed freely)
Repl.MCB..Reply: MCB is closed
Enab.MCB..Enable MCB

Table 4-2: Terminal overview, part 2

Katolight Service - Master Repair Manual - Page 1727

Application mode {0}

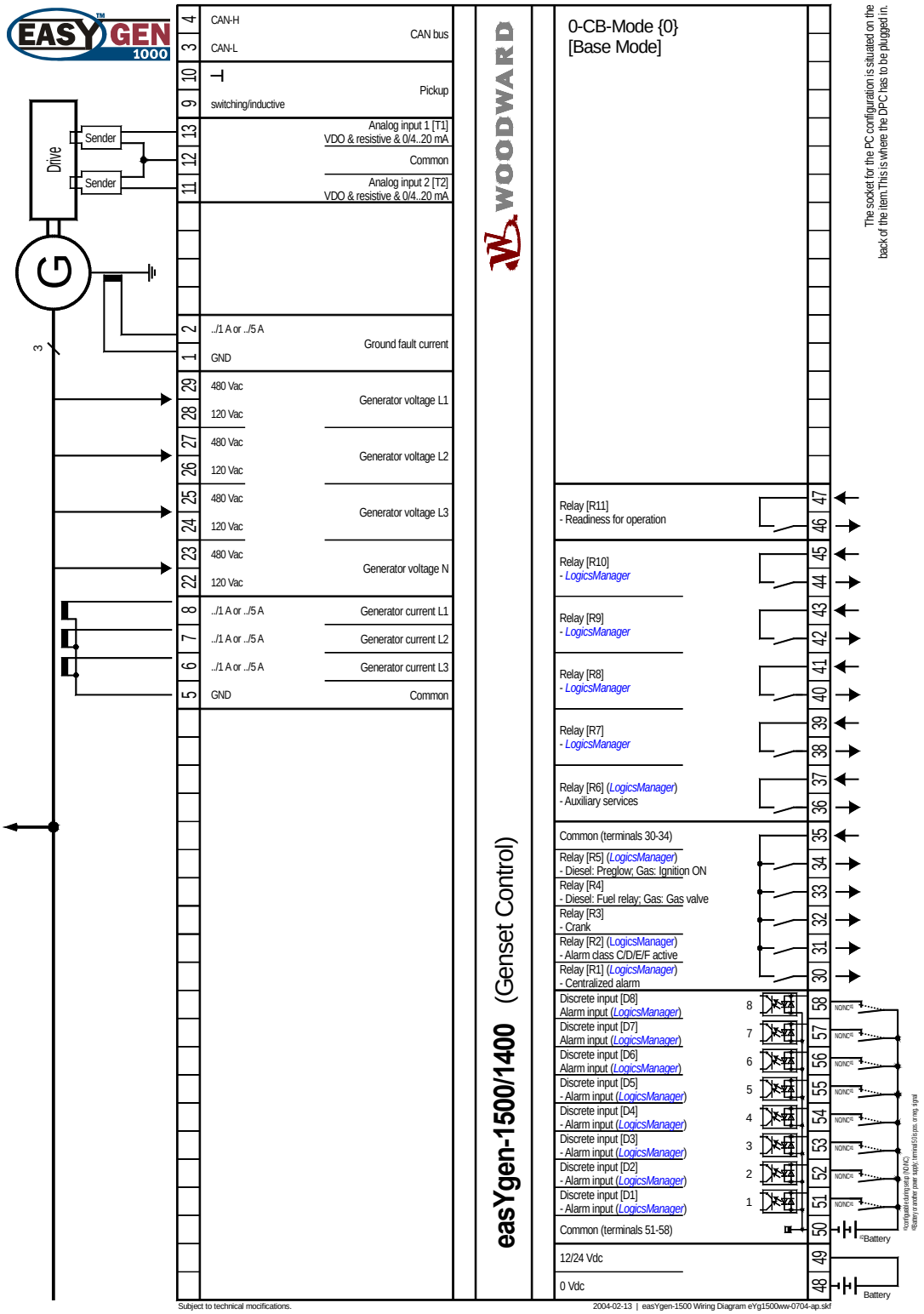

Figure 4-2: Wiring diagram - application mode {0} - base mode

© Woodward

Katolight Service - Master Repair Manual - Page 1728

Application mode {1o}

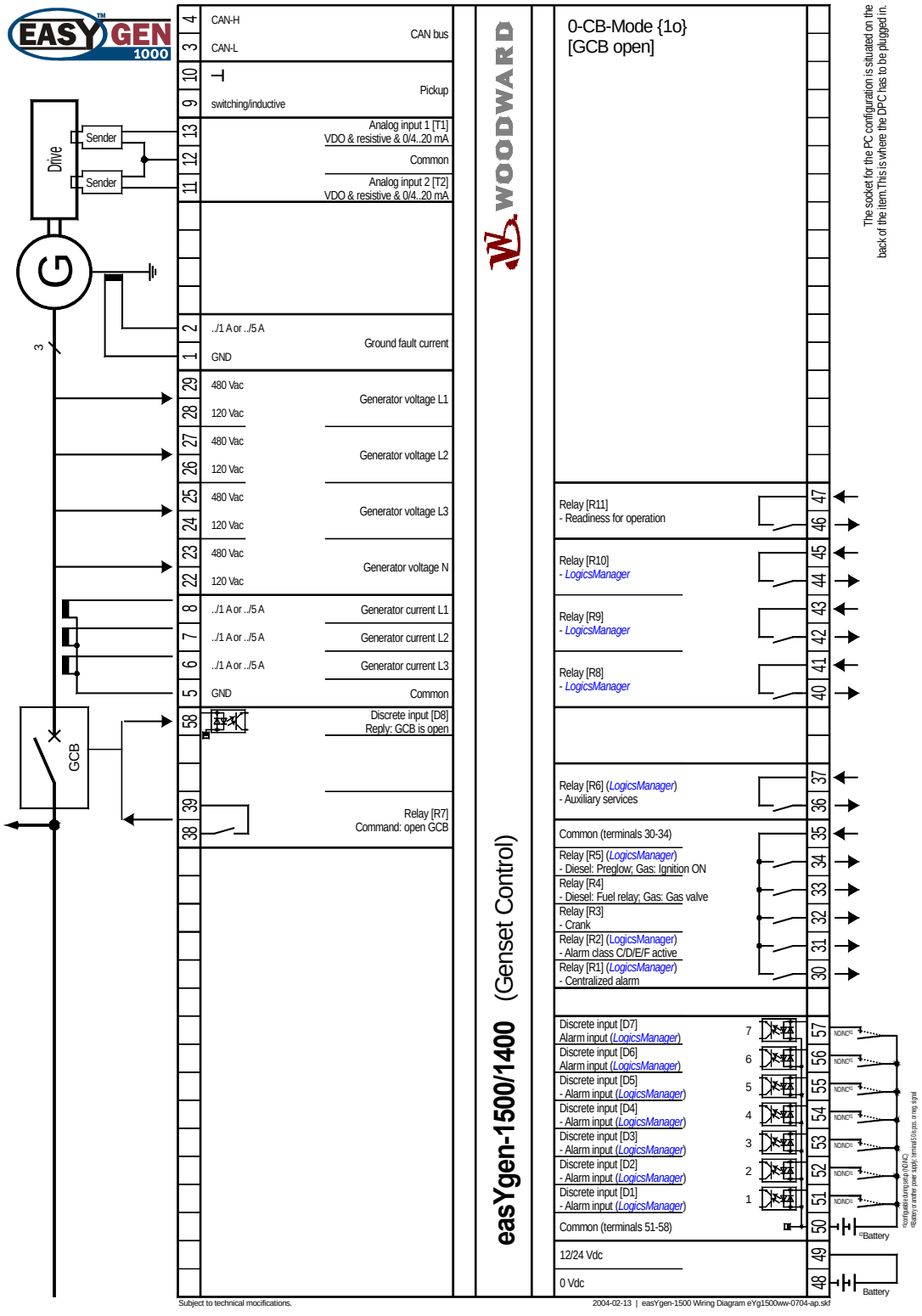

Figure 4-3: Wiring diagram - application mode {1o} - 1 CB mode

Application mode {1oc}

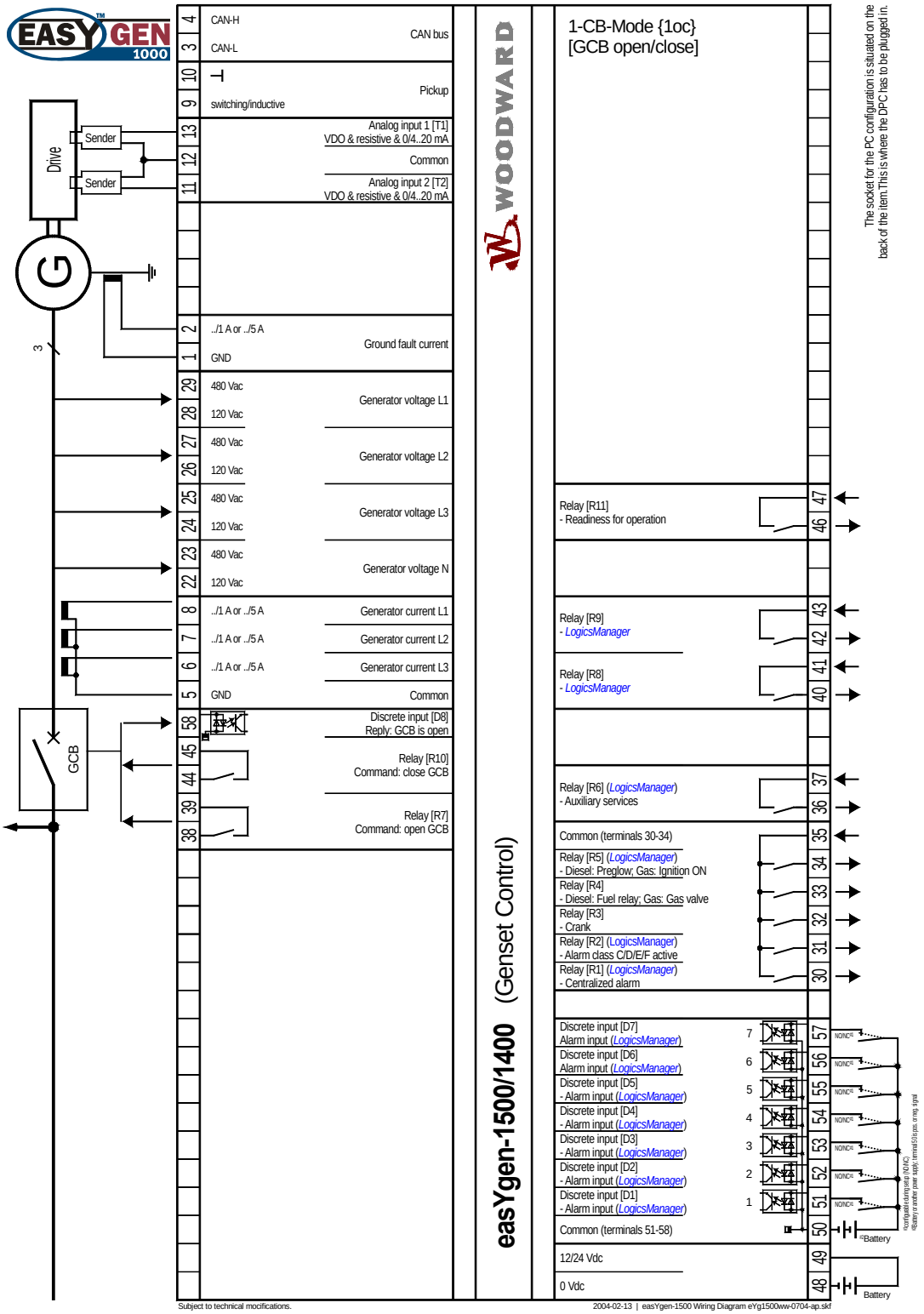

Figure 4-4: Wiring diagram - application mode {1oc} - 1 CB mode

Katolight Service - Master Repair Manual - Page 1730

Application mode {2oc}

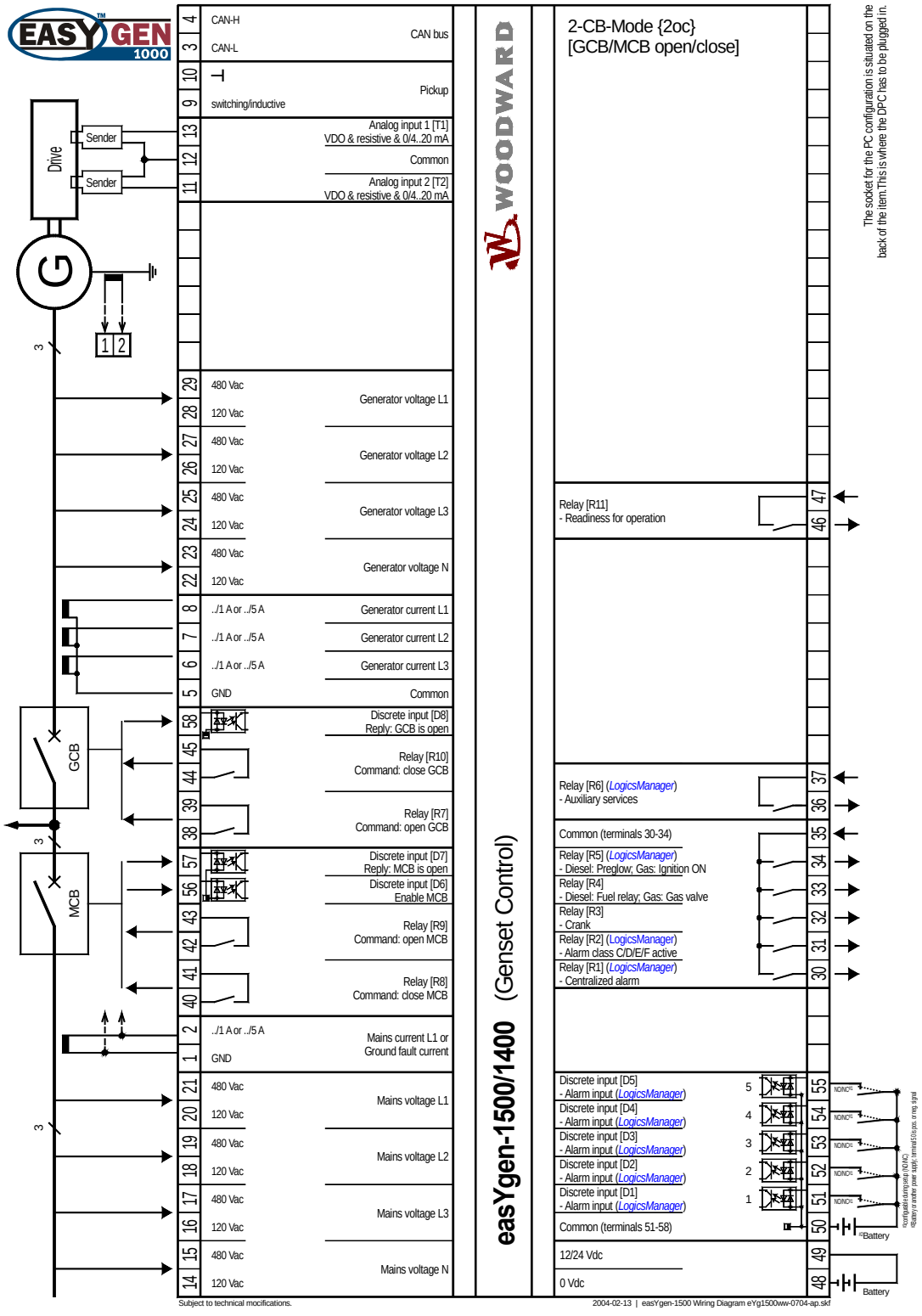

Figure 4-5: Wiring diagram - application mode {2oc} - 2 CB mode

Katolight Service - Master Repair Manual - Page 1731

Chapter 5.
Connections

Power supply

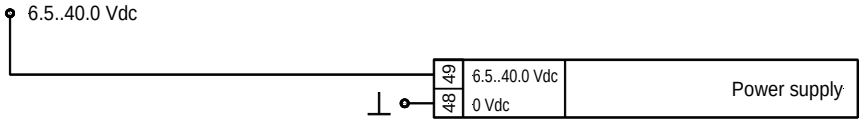

Figure 5-1: Power supply

Connect in application mode ...			
[BM]	[0CB]	[1CB]	[2CB]
✓	✓	✓	✓
✓	✓	✓	✓

Terminal	Description	A_{max}
48	0 Vdc reference potential	2.5 mm²
49	6.5..40.0 Vdc, 15 W	2.5 mm²

Table 5-1: Power supply - terminal assignment

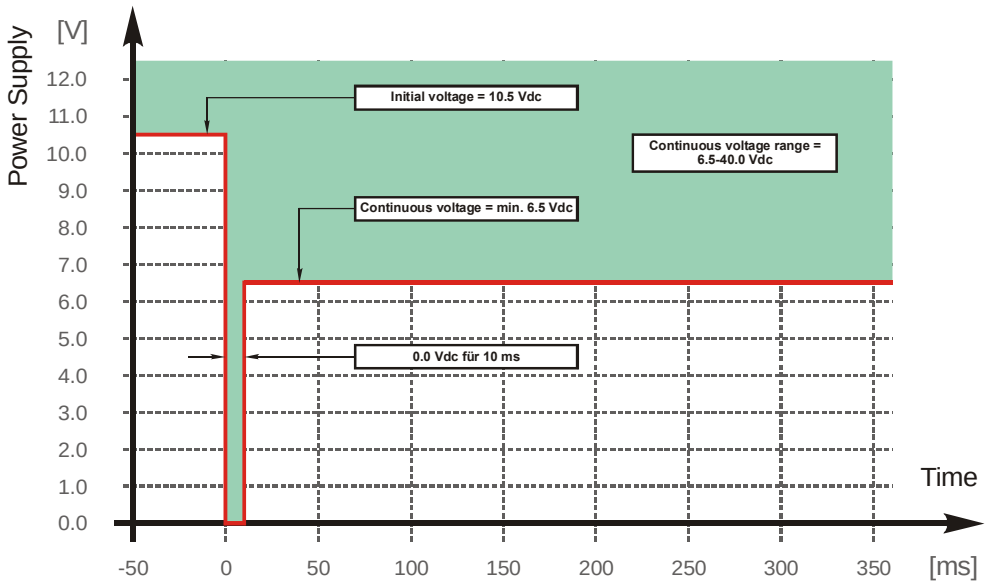

Figure 5-2: Power supply - crank waveform at maximum load

© Woodward

Katolight Service - Master Repair Manual - Page 1732

Voltage measuring (*FlexRange*)

NOTE

The measuring voltages may only be attached alternatively either on the input for 120 Vac or to the input for 480 Vac. If both measuring inputs are installed at the same time, this will cause wrong measurements!

Voltage measuring: Generator

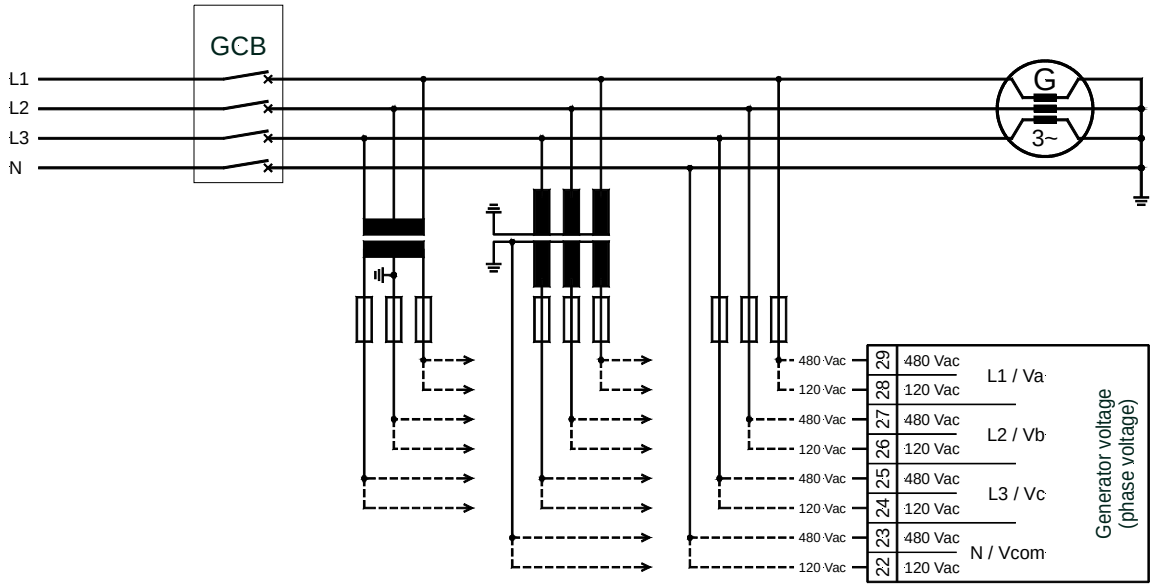

Figure 5-3: Voltage measuring (*FlexRange*) - generator

Connect in application mode ...			
[BM]	[0CB]	[1CB]	[2CB]
✓	✓	✓	✓
✓	✓	✓	✓
✓	✓	✓	✓
✓	✓	✓	✓
✓	✓	✓	✓
✓	✓	✓	✓
✓	✓	✓	✓
✓	✓	✓	✓

Terminal	Description		A_{max}
22	Generator voltage - phase N	120 Vac	2.5 mm²
23		480 Vac	2.5 mm²
24	Generator voltage - phase L3	120 Vac	2.5 mm²
25		480 Vac	2.5 mm²
26	Generator voltage - phase L2	120 Vac	2.5 mm²
27		480 Vac	2.5 mm²
28	Generator voltage - phase L1	120 Vac	2.5 mm²
29		480 Vac	2.5 mm²

Table 5-2: Voltage measuring (*FlexRange*) - terminal assignment - generator voltage

Katolight Service - Master Repair Manual - Page 1733

Voltage measuring: Generator, parameter setting '3ph 4w' (3phase, 4wire)

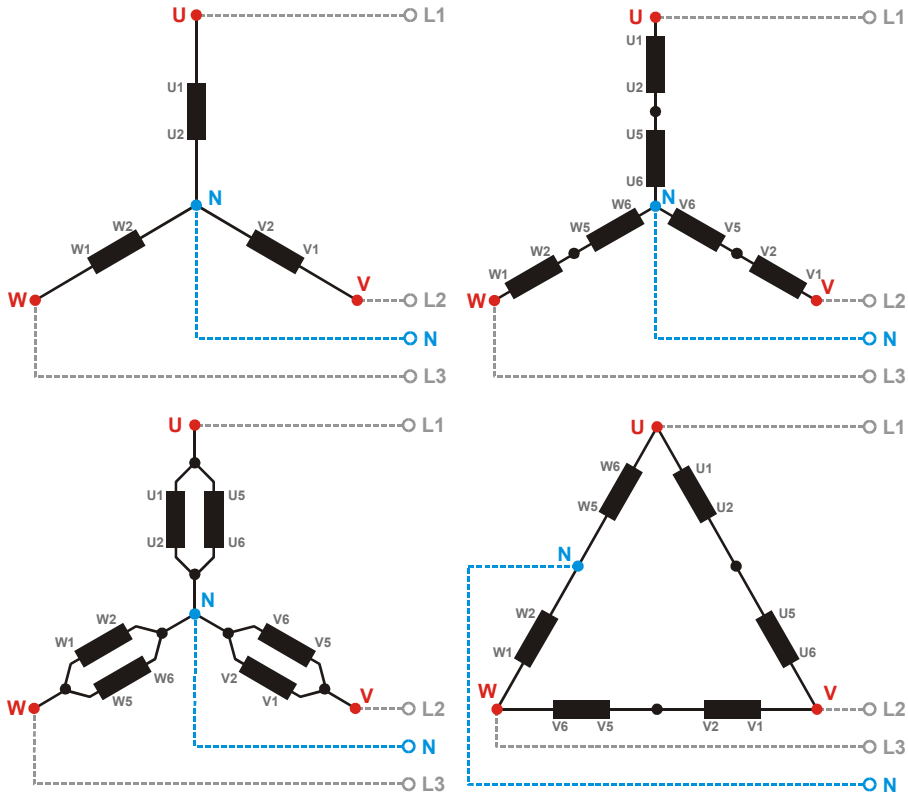

Figure 5-4: Voltage measuring (***FlexRange***) -generator, 3ph 4w

3ph 4w	Wiring terminals								Notes
Rated voltage	120 Vac				480 Vac				1
Range (max.)	0..150 Vac				0..600 Vac				
easYgen	28	26	24	22	29	27	25	23	
Phase	L1	L2	L3	N	L1	L2	L3	N	

Table 5-3: Voltage measuring (*FlexRange*) - terminal assignment - generator, 3ph 4w

1 For different voltage systems different wiring terminals have to be used. A simultaneous use of the N terminal is not possible can can lead to wrong measuring.

© Woodward

Katolight Service - Master Repair Manual - Page 1734

Voltage measuring: Generator, parameter setting '3ph 3w' (3phase, 3wire)

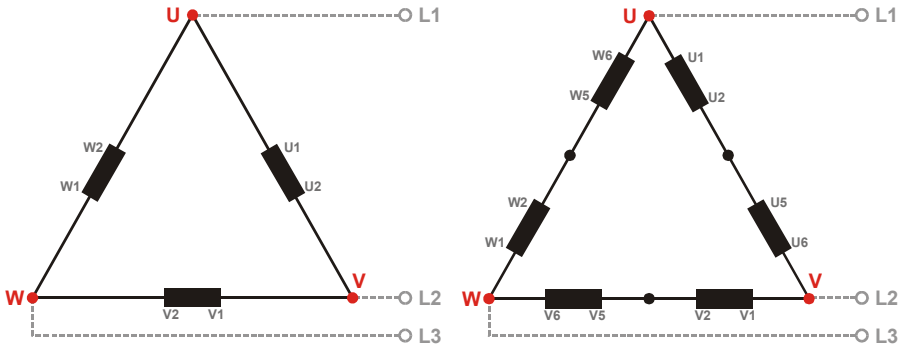

Figure 5-5: Voltage measuring (*FlexRange*) - generator, 3ph 3w

3ph 3w	Wiring terminals								Notes
Rated voltage	120 Vac				480 Vac				2
Range (max.)	0..150 Vac				0..600 Vac				
easYgen	28	26	24	22	29	27	25	23	
Phase	L1	L2	L3	---	L1	L2	L3	---	

Table 5-4: Voltage measuring (*FlexRange*) - terminal assignment - generator, 3ph 3w

2 For different voltage systems different wiring terminals have to be used. A simultaneous use of the N terminal is not possible can can lead to wrong measuring.

Katolight Service - Master Repair Manual - Page 1735

Voltage measuring: Generator, parameter setting '1ph 3w' (1phase, 3wire)

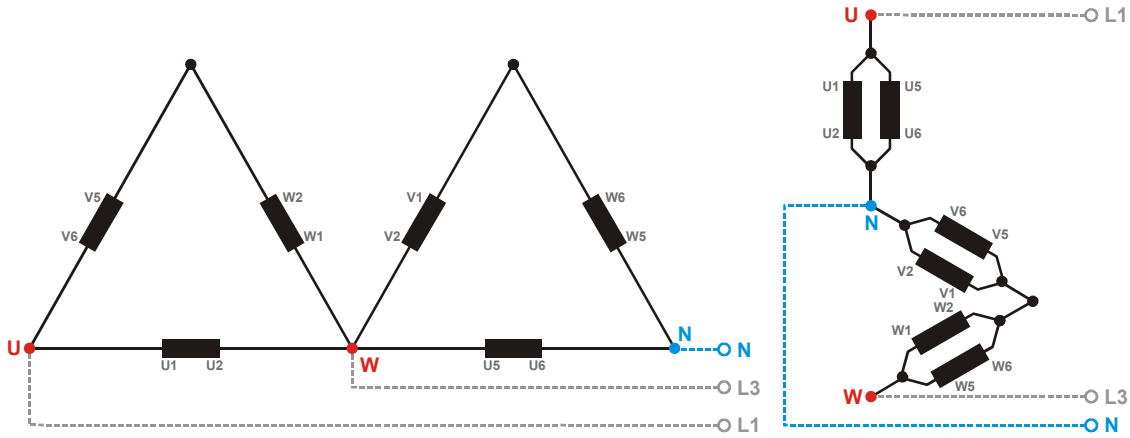

Figure 5-6: Voltage measuring (*FlexRange*) - generator, 1ph 3w

1p 3w	Wiring terminals								Notes
Rated voltage	120 Vac				480 Vac				3
Range (max.)	0..150 Vac				0..600 Vac				
easYgen	28	26	24	22	29	27	25	23	
Phase	L1	N	L3	N	L1	N	L3	N	

Table 5-5: Voltage measuring (*FlexRange*) - terminal assignment - generator, 1ph 3w

Voltage measuring: Generator, parameter setting '1ph 2w' (1phase, 2wire)

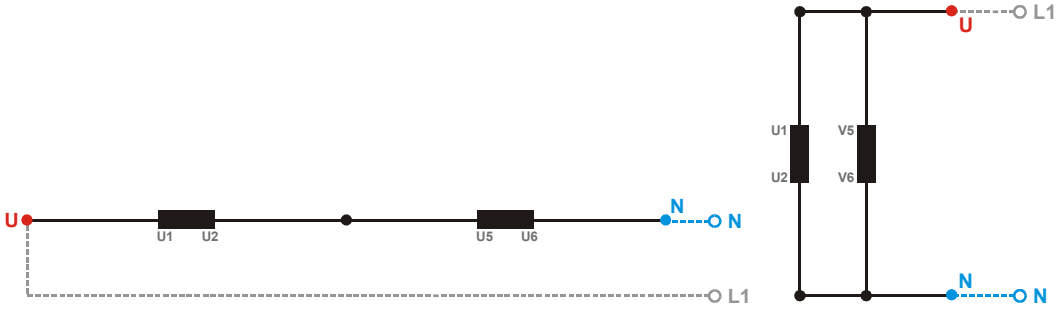

Figure 5-7: Voltage measuring (*FlexRange*) - generator, 1ph 2w

1ph 2w	Wiring terminals								Notes
Rated voltage	120 Vac				480 Vac				3
Range (max.)	0..150 Vac				0..600 Vac				
easYgen	28	26	24	22	29	27	25	23	
Phase	L1	N	N	N	L1	N	N	N	

Table 5-6: Voltage measuring (*FlexRange*) - terminal assignment - generator, 1ph 2w

3 For different voltage systems different wiring terminals have to be used. A simultaneous use of the N terminal is not possible can can lead to wrong measuring.

© Woodward

Katolight Service - Master Repair Manual - Page 1736

Mains

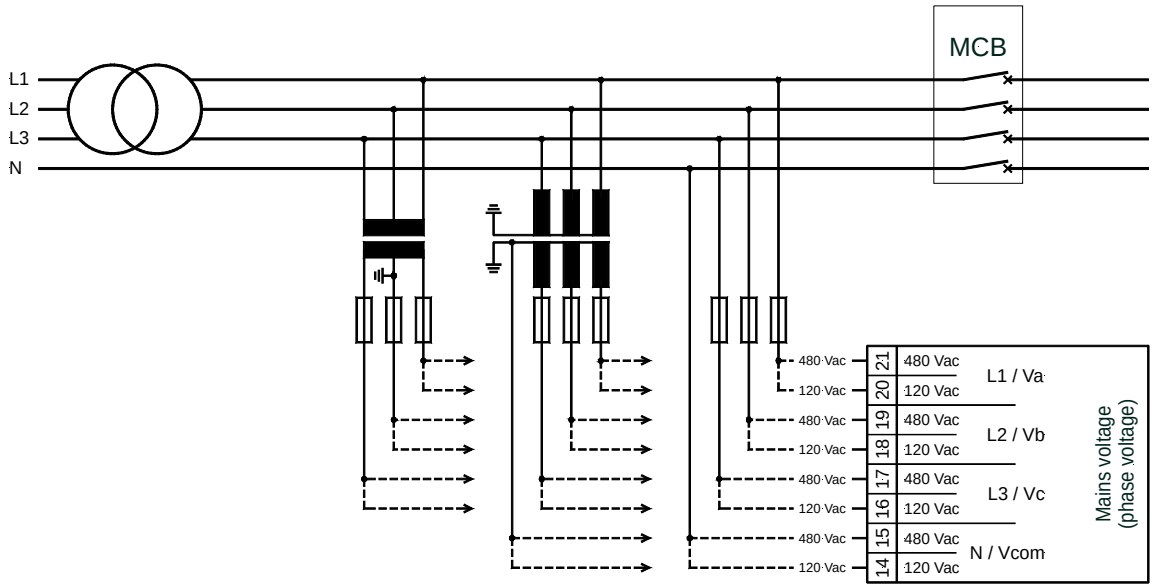

Figure 5-8: Voltage measuring (***FlexRange***) - mains

Connect in application mode ...			
[BM]	[0CB]	[1CB]	[2CB]
---	---	---	✓
---	---	---	✓
---	---	---	✓
---	---	---	✓
---	---	---	✓
---	---	---	✓
---	---	---	✓
---	---	---	✓

Terminal	Description		A_{max}
14	Mains voltage - phase N	120 Vac	2.5 mm²
15		480 Vac	2.5 mm²
16	Mains voltage - phase L3	120 Vac	2.5 mm²
17		480 Vac	2.5 mm²
18	Mains voltage - phase L2	120 Vac	2.5 mm²
19		480 Vac	2.5 mm²
20	Mains voltage - phase L1	120 Vac	2.5 mm²
21		480 Vac	2.5 mm²

Table 5-7: Voltage measuring (***FlexRange***) - terminal assignment - mains voltage

Katolight Service - Master Repair Manual - Page 1737

Voltage measuring: Mains, parameter setting '3ph 4w' (3phase, 4wire)

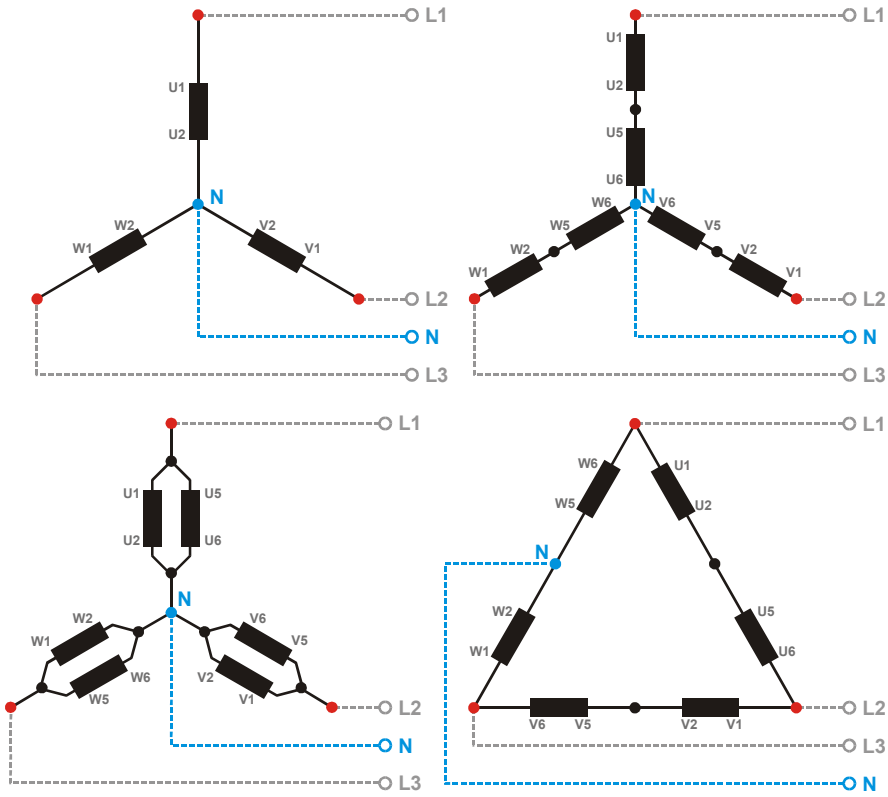

Figure 5-9: Voltage measuring (***FlexRange***) - mains, 3ph 4w

3ph 4w	Wiring terminals								Notes
Rated voltage	120 Vac				480 Vac				4
Range (max.)	0..150 Vac				0..600 Vac				
easYgen	20	18	16	14	21	19	17	15	
Phase	L1	L2	L3	N	L1	L2	L3	N	

Table 5-8: Voltage measuring (*FlexRange*) - terminal assignment - mains, 3ph 4w

4 For different voltage systems different wiring terminals have to be used. A simultaneous use of the N terminal is not possible can can lead to wrong measuring.

© Woodward

Katolight Service - Master Repair Manual - Page 1738

Voltage measuring: Mains, parameter setting '3ph 3w' (3phase, 3wire)

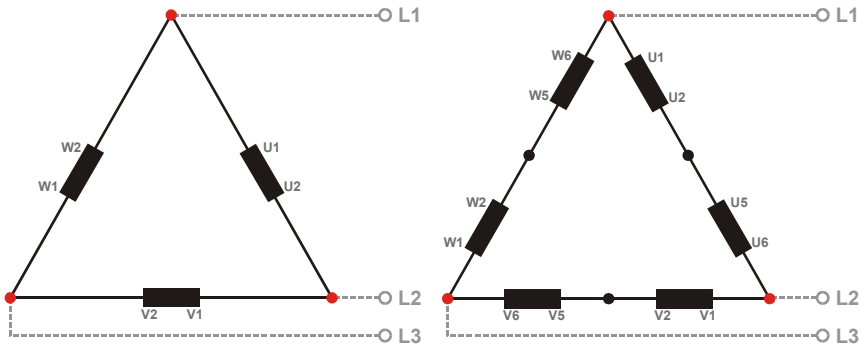

Figure 5-10: Voltage measuring (***FlexRange***) - mains, 3ph 3w

3ph 3w	Wiring terminals								Nots
Rated voltage	120 Vac				480 Vac				5
Range (max.)	0..150 Vac				0..600 Vac				
easYgen	20	18	16	14	21	19	17	15	
Phase	L1	L2	L3	---	L1	L2	L3	---	

Table 5-9: Voltage measuring (*FlexRange*) - terminal assignment - mains, 3ph 3w

5 For different voltage systems different wiring terminals have to be used. A simultaneous use of the N terminal is not possible can can lead to wrong measuring.

Katolight Service - Master Repair Manual - Page 1739

Voltage measuring: Mains, parameter setting '1ph 3w' (1phase, 3wire)

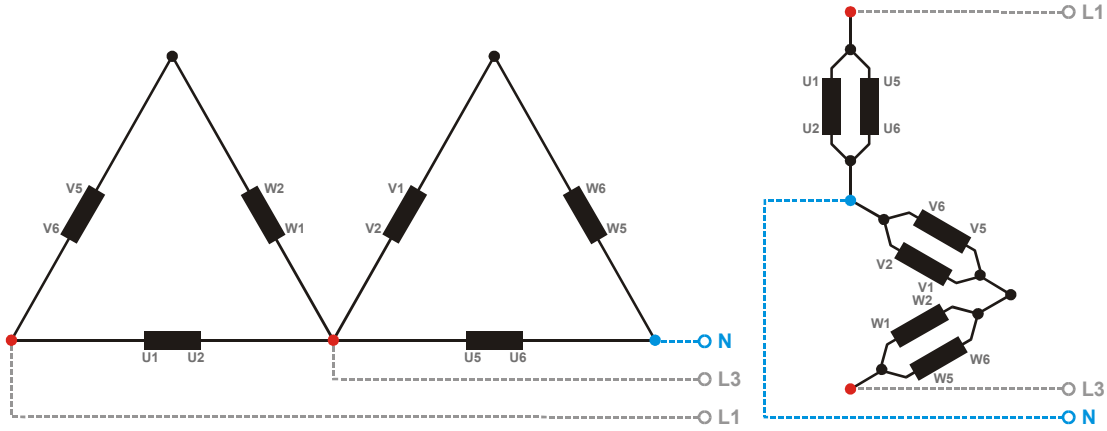

Figure 5-11: Voltage measuring (*FlexRange*) - mains, 1ph 3w

1p 3w	Wiring terminals								Nots
Rated voltages	120 Vac				480 Vac				6
Range (max.)	0..150 Vac				0..600 Vac				
easYgen	20	18	16	14	21	19	17	15	
Phase	L1	N	L3	N	L1	N	L3	N	

Table 5-10: Voltage measuring (*FlexRange*) - terminal assignment - mains, 1ph 3w

Voltage measuring: Mains, parameter setting '1ph 2w' (1phase, 2wire)

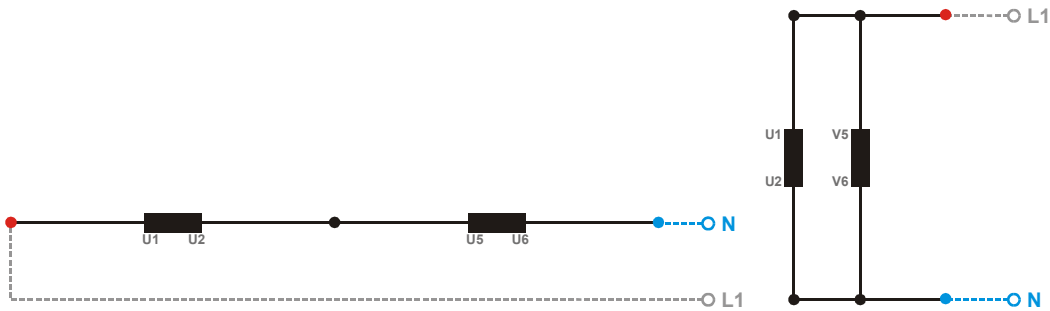

Figure 5-12: Voltage measuring (*FlexRange*) - mains, 1ph 2w

1p 2w	Wiring terminals								Notes
Rated voltages	120 Vac				480 Vac				6
Range (max.)	0..150 Vac				0..600 Vac				
easYgen	20	18	16	14	21	19	17	15	
Phase	L1	N	N	N	L1	N	N	N	

Table 5-11: Voltage measuring (*FlexRange*) - terminal assignment - mains, 1ph 2w

6 For different voltage systems different wiring terminals have to be used. A simultaneous use of the N terminal is not possible can can lead to wrong measuring.

© Woodward

Katolight Service - Master Repair Manual - Page 1740

Current measuring

CAUTION

Before disconnecting the secondary current transformer/CT's connections or the connections of the current transformer/CT's at the device, make sure that the current transformer/CT's is short-circuited.

Generator

NOTE

Please connect the wires of the current transducer "I (s)" as near as possible to the unit.

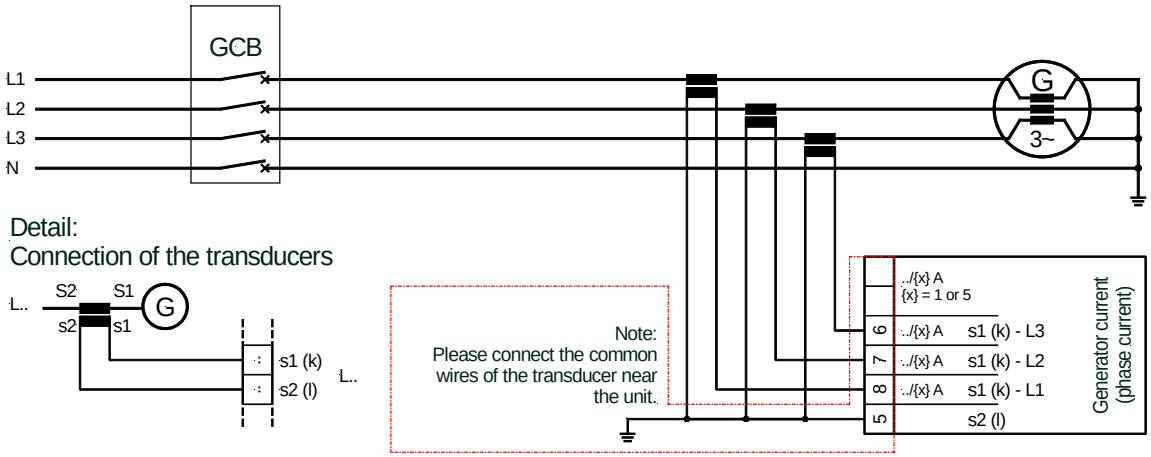

Figure 5-13: Current measuring - generator

Connect in application mode ...			
[BM]	[0CB]	[1CB]	[2CB]
✓	✓	✓	✓
✓	✓	✓	✓
✓	✓	✓	✓
✓	✓	✓	✓

Terminal	Description	A_{max}
5	Generator current - phases L1/L2/L3 - transformer terminals s2 (l)	2.5 mm²
6	Generator current - phase L3 - transformer terminal s1 (k)	2.5 mm²
7	Generator current - phase L2 - transformer terminal s1 (k)	2.5 mm²
8	Generator current - phase L1 - transformer terminal s1 (k)	2.5 mm²

Table 5-12: Current measuring - terminal assignment - generator current

Katolight Service - Master Repair Manual - Page 1741

Current measuring: Generator, parameter setting 'L1 L2 L3'

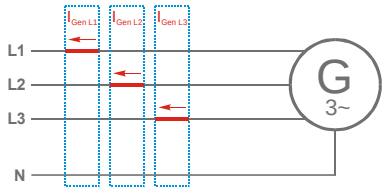

Figure 5-14: Current measuring - generator, L1 L2 L3

L1 L2 L3	Wiring terminals				Notes
easYgen	8	7	6	5	
Phase	L1	L2	L3	GND	

Table 5-13: Current measuring - terminal assignment - generator, L1 L2 L3

Current measuring: Generator, parameter setting 'Phase L1', 'Phase L2' & 'Phase L3'

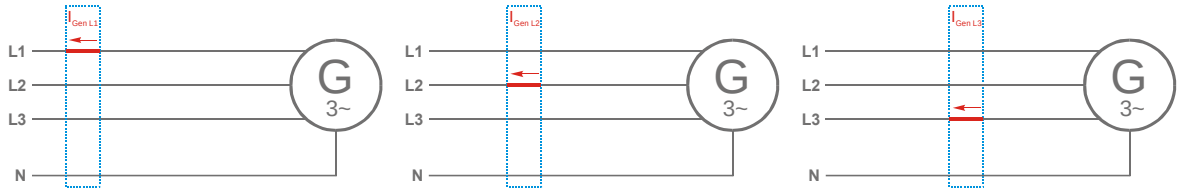

Figure 5-15: Current measuring - Generator, Phase Lx

	Wiring terminals				Notse
Phase L1					
easYgen	8	7	6	5	
Phase	L1	---	---	GND	
Phase L2					
easYgen	8	7	6	5	
Phase	---	L2	---	GND	
Phase L3					
easYgen	8	7	6	5	
Phase	---	---	L3	GND	

Table 5-14: Current measuring - terminal assignment - generator, Phase Lx

© Woodward

Katolight Service - Master Repair Manual - Page 1742

Mains current ({2oc} only)

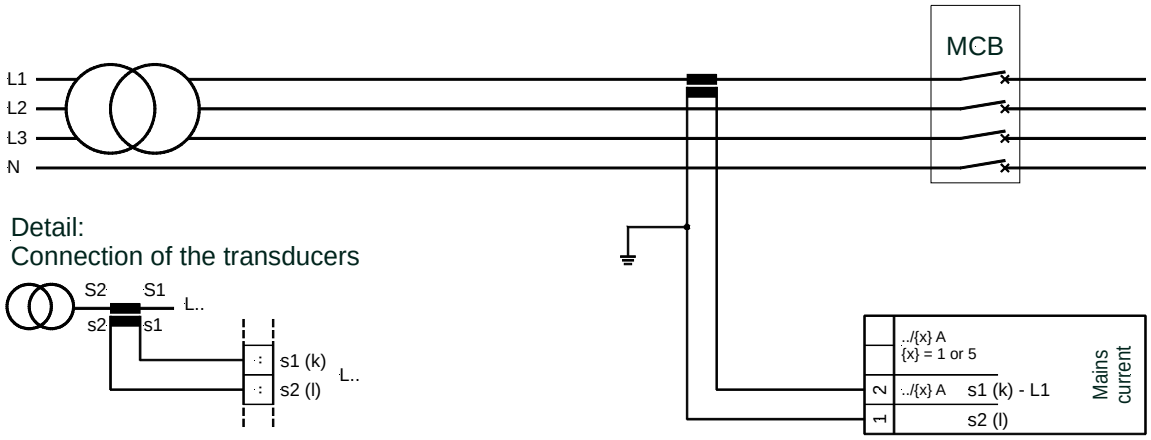

Figure 5-16: Current measuring - mains current

Connect in application mode ...			
[BM]	[0CB]	[1CB]	[2CB]
---	---	---	☑
---	---	---	☑

Terminal	Description	A_{max}
1	Mains current - phase L1 - transformer terminal s2 (l)	2.5 mm²
2	Mains current - phase L1 - transformer terminal s1 (k)	2.5 mm²

Table 5-15: Current measuring - terminal assignment - mains current

Current measuring: Mains, parameter setting 'Phase L1', 'Phase L2' & 'Phase L3'

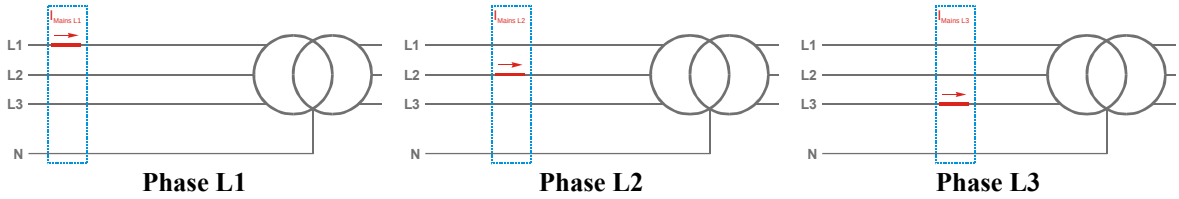

Figure 5-17: Current measuring - generator, Phase Lx

	Wiring terminals		Notes
Phase L1			
easYgen	1	2	
Phase	GND	L1	
Phase L2			
easYgen	1	2	
Phase	GND	L2	
Phase L3			
easYgen	1	2	
Phase	GND	L3	

Table 5-16: current measuring - terminal assignment - generator, Phase Lx

Katolight Service - Master Repair Manual - Page 1743

Power measuring

If the unit's current transformers are wired according to the diagram shown, the following values are displayed.

NOTE

The value of the reactive power measuring is valid for symmetric systems only.

Application mode	Parameter	Description	Sign displayed
{BM}-{1o}-{1oc}-{2oc}	Generator real power		Positive
{BM}-{1o}-{1oc}-{2oc}	Generator real power		Negative
{BM}-{1o}-{1oc}-{2oc}	Generator power factor cos φ	Inductive / lagging	Positive
{BM}-{1o}-{1oc}-{2oc}	Generator power factor cos φ	Capacitive / leading	Negative
{BM}-{1o}-{1oc}-{2oc}	Mains real power	Plant exporting kW	Positive
{BM}-{1o}-{1oc}-{2oc}	Mains real power	Plant importing kW	Negative
{BM}-{1o}-{1oc}-{2oc}	Mains power factor cos φ	Plant generating kvar's	Positive
{BM}-{1o}-{1oc}-{2oc}	Mains power factor cos φ	Plant absorbing kvar's	Negative

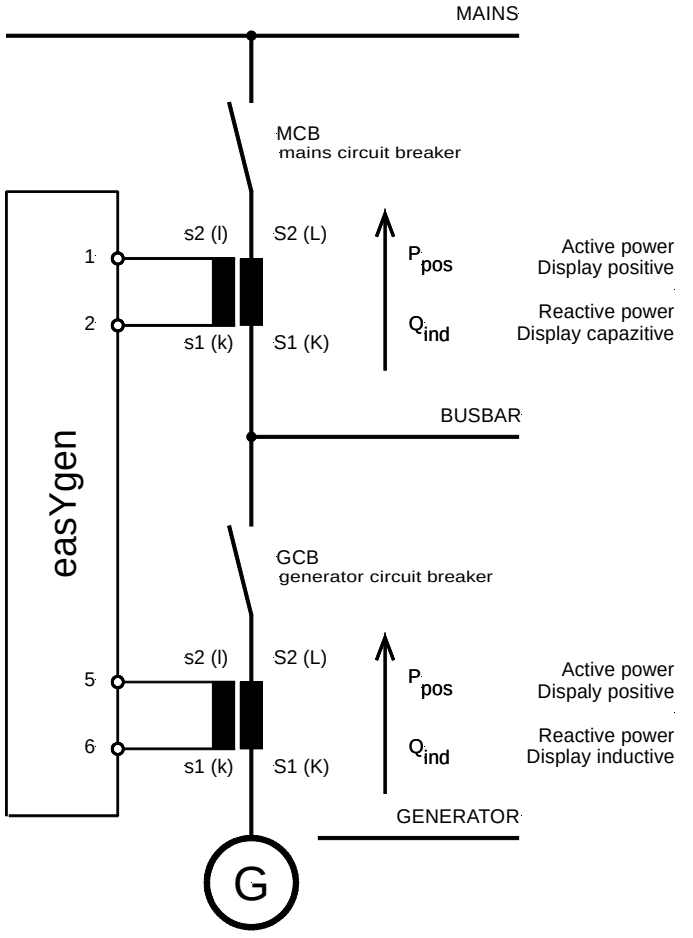

Figure 5-18: Power measuring - direction of power

© Woodward

Katolight Service - Master Repair Manual - Page 1744

Pickup

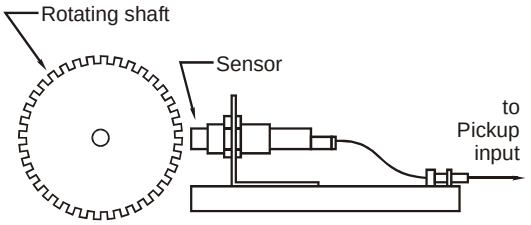

Figure 5-19: Pickup - principle overview

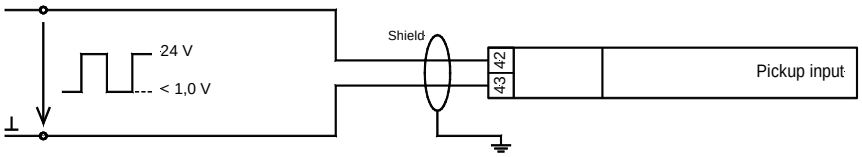

Figure 5-20: Pickup input

Connect in application mode ...			
[BM]	[0CB]	[1CB]	[2CB]
✓	✓	✓	✓
✓	✓	✓	✓

Terminal	Description		A_{max}
9	Pickup input	inductive/switching	2.5 mm²
10		GND	2.5 mm²

Table 5-17: Pickup - terminal assignment

NOTE

The input frequency of the Pickup has to be limited to 14 kHz.

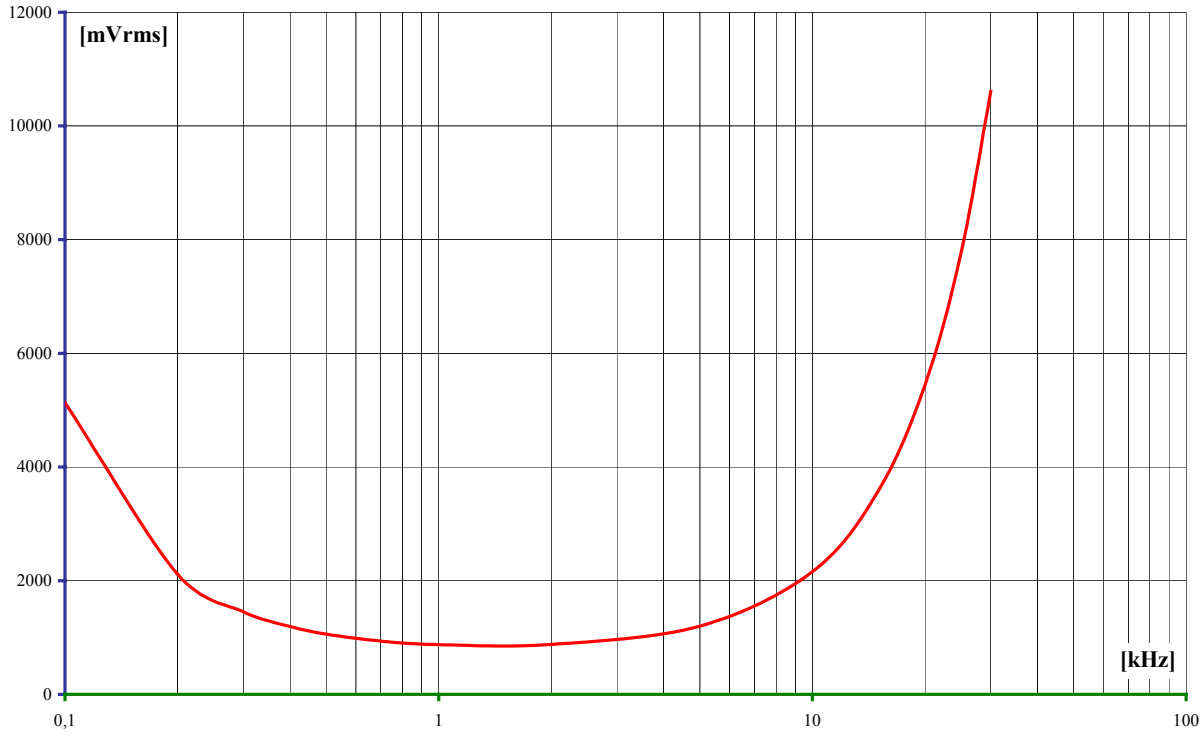

Figure 5-21: Minimal necessary input voltage depending on frequency

Katolight Service - Master Repair Manual - Page 1745

Discrete inputs

Positive logic
(usable alternatively to negative logic - see next chapter)

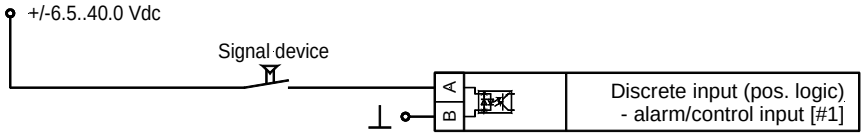

Figure 5-22: Discrete inputs - alarm/control inputs [type #1] - positive logic

For the circuit breaker reply inputs the input is closed when the breaker is opened. This would be a "B" type contact on the circuit breaker.

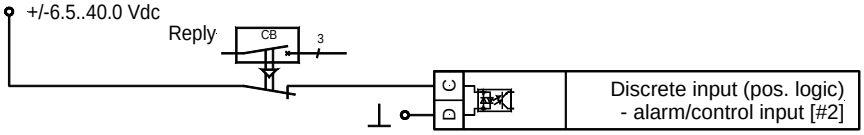

Figure 5-23: Discrete inputs - alarm/control inputs [type #2] - positive logic

Connect in application mode ...				Terminal		Description				A_{max}
[BM]	[0CB]	[1CB]	[2CB]	Term. **A / C**	Com. **B / D**				Type ⇩	
✓	✓	✓	✓	51	50	Discrete input [D1]	[BM] - [0CB] - [1CB] - [2CB] -	Alarm input (programmable)	SW	2.5 mm²
✓	✓	✓	✓	52		Discrete input [D2]	[BM] - [0CB] - [1CB] - [2CB] -	Alarm input (programmable)	SW	2.5 mm²
✓	✓	✓	✓	53		Discrete input [D3]	[BM] - [0CB] - [1CB] - [2CB] -	Alarm input (programmable)	SW	2.5 mm²
✓	✓	✓	✓	54		Discrete input [D4]	[BM] - [0CB] - [1CB] - [2CB] -	Alarm input (programmable)	SW	2.5 mm²
✓	✓	✓	✓	55		Discrete input [D5]	[BM] - [0CB] - [1CB] - [2CB] -	Alarm input (programmable)	SW	2.5 mm²
✓	✓	✓	✓	56		Discrete input [D6]	[BM] - [0CB] - [1CB] - [2CB] -	Alarm input (programmable) Alarm input (programmable) Alarm input (programmable) Enable MCB	SW SW SW SW	2.5 mm²
✓	✓	✓	✓	57		Discrete input [D7]	[BM] - [0CB] - [1CB] - [2CB] -	Alarm input (programmable) Alarm input (programmable) Alarm input (programmable) Reply: MCB is open	SW SW SW #2	2.5 mm²
✓	✓	✓	✓	58		Discrete input [D8]	[BM] - [0CB] - [1CB] - [2CB] -	Alarm input (programmable) Alarm input (programmable) Reply: GCB is open Reply: GCB is open	SW SW #2 #2	2.5 mm²

SW..switchable via the software, [#1]..type 1 (NO/make contact), [#2]..type 2 (NC/break contact)

Table 5-18: Discrete input - terminal assignment - alarm/control input - positive logic

© Woodward

Katolight Service - Master Repair Manual - Page 1746

Negative logic
(usable alternatively to positive logic - see previous chapter)

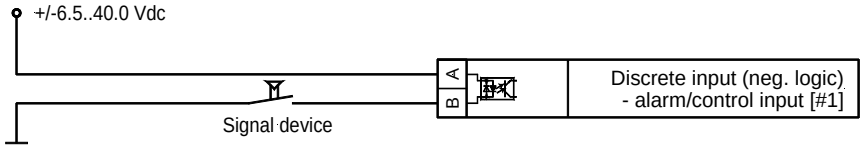

Figure 5-24: Discrete inputs - alarm/control inputs [type #1] - negative logic

For the circuit breaker reply inputs the input is closed when the breaker is opened. This would be a "B" type contact on the circuit breaker.

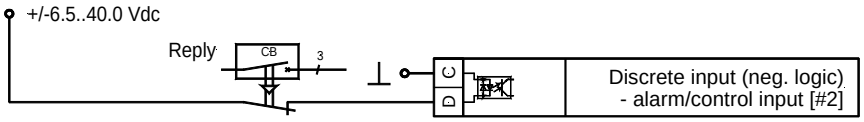

Figure 5-25: Discrete input - alarm/control inputs [type #2] - negative logic

Connect in application mode ... [BM]	[0CB]	[1CB]	[2CB]	Terminal Com. A / C	Term. B / D	Description				A_{max}
									Type ⇩	
✓	✓	✓	✓	50	51	Discrete input [D1]	[BM] - [0CB] - [1CB] - [2CB] -	Alarm input (programmable)	SW	2.5 mm²
✓	✓	✓	✓		52	Discrete input [D2]	[BM] - [0CB] - [1CB] - [2CB] -	Alarm input (programmable)	SW	2.5 mm²
✓	✓	✓	✓		53	Discrete input [D3]	[BM] - [0CB] - [1CB] - [2CB] -	Alarm input (programmable)	SW	2.5 mm²
✓	✓	✓	✓		54	Discrete input [D4]	[BM] - [0CB] - [1CB] - [2CB] -	Alarm input (programmable)	SW	2.5 mm²
✓	✓	✓	✓		55	Discrete input [D5]	[BM] - [0CB] - [1CB] - [2CB] -	Alarm input (programmable)	SW	2.5 mm²
✓	✓	✓	✓		56	Discrete input [D6]	[BM] - [0CB] - [1CB] - [2CB] -	Alarm input (programmable) Alarm input (programmable) Alarm input (programmable) Enable MCB	SW SW SW SW	2.5 mm²
✓	✓	✓	✓		57	Discrete input [D7]	[BM] - [0CB] - [1CB] - [2CB] -	Alarm input (programmable) Alarm input (programmable) Alarm input (programmable) Reply: MCB is open	SW SW SW #2	2.5 mm²
✓	✓	✓	✓		58	Discrete input [D8]	[BM] - [0CB] - [1CB] - [2CB] -	Alarm input (programmable) Alarm input (programmable) Reply: GCB is open Reply: GCB is open	SW SW #2 #2	2.5 mm²

SW..switchable via software, [#1]..type 1 (NO/make contact), [#2]..type 2 (NC/break contact)

Table 5-19: Discrete input - terminal assignment - alarm/control inputs - negative logic

Katolight Service - Master Repair Manual - Page 1747

Relay outputs
(control outputs and *LogicsManager*)

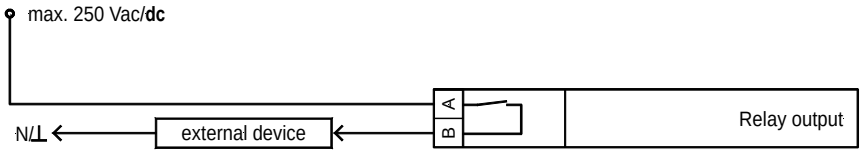

Figure 5-26: Relay outputs

Connect in application mode ... {0}	{1o}	{1oc}	{2oc}	A	B	Terminal Term.	Terminal Com.	Description					A_{max}
				A	**B**			**Form A, common contact**			Type ⇩		
✓	✓	✓	✓			30		Relay output [R1]	[BM] -	*LogicsManager*	SW		2.5 mm²
									[0CB] -		SW		
									[1CB] -		SW		
									[2CB] -		SW		
✓	✓	✓	✓			31		Relay output [R2]	[BM] -	*LogicsManager*	SW		2.5 mm²
									[0CB] -		SW		
									[1CB] -		SW		
									[2CB] -		SW		
✓	✓	✓	✓			32	35	Relay output [R3]	[BM] -	Crank	SW		2.5 mm²
									[0CB] -		SW		
									[1CB] -		SW		
									[2CB] -		SW		
✓	✓	✓	✓			33		Relay output [R4]	[BM] -		SW		2.5 mm²
									[0CB] -	Diesel: Fuel relay	SW		
									[1CB] -	Gas: Gas valve	SW		
									[2CB] -		SW		
✓	✓	✓	✓			34		Relay output [R5]	[BM] -	*LogicsManager*	SW		2.5 mm²
									[0CB] -		SW		
									[1CB] -		SW		
									[2CB] -		SW		

LogicsManager..using the function ***LogicsManager*** it is possible to freely program the relays
SW..switchable via the software, [#1]..type 1 (NO/make contact)

Table 5-20: Relay outputs - terminal assignment, part 1

© Woodward

Katolight Service - Master Repair Manual - Page 1748

Connect in application mode ...				Terminal		Description			A_{max}
{0}	{1o}	{1oc}	{2oc}	Term.	Com.				
				A	**B**	**Form A, separated contacts**		Type ⇩	
✓	✓	✓	✓	36	37	Relay output [R6]	[BM] -		SW	2.5 mm²
							[0CB] -	*LogicsManager*	SW	
							[1CB] -		SW	
							[2CB] -		SW	
✓	✓	✓	✓	38	39	Relay output [R7]	[BM] -	*LogicsManager*	SW	2.5 mm²
							[0CB] -	Command: open GCB	#1	
							[1CB] -	Command: open GCB	#1	
							[2CB] -	Command: open GCB	#1	
✓	✓	✓	✓	40	41	Relay output [R8]	[BM] -	*LogicsManager*	SW	2.5 mm²
							[0CB] -	*LogicsManager*	SW	
							[1CB] -	*LogicsManager*	SW	
							[2CB] -	Command: close MCB	#1	
✓	✓	✓	✓	42	43	Relay output [R9]	[BM] -	*LogicsManager*	SW	2.5 mm²
							[0CB] -	*LogicsManager*	SW	
							[1CB] -	*LogicsManager*	SW	
							[2CB] -	Command: open MCB	#1	
✓	✓	✓	✓	44	45	Relay output [R10]	[BM] -	*LogicsManager*	SW	2.5 mm²
							[0CB] -	*LogicsManager*	SW	
							[1CB] -	Command: close GCB	#1	
							[2CB] -	Command: close GCB	#1	
✓	✓	✓	✓	46	47	Relay output [R11]	[BM] -			2.5 mm²
							[0CB] -	Readiness for operation	#1	
							[1CB] -			
							[2CB] -			

LogicsManager..using the function ***LogicsManager*** it is possible to freely program the relays
SW..switchable via the software, [#1]..type 1 (NO/make contact)

Table 5-21: Relay outputs - terminal assignment, part 1

Katolight Service - Master Repair Manual - Page 1749

Analog inputs (*FlexIn*)

NOTE

For proper measuring use VDO senders with isolated return to common ground of the easYgen-1500 (terminal 12).

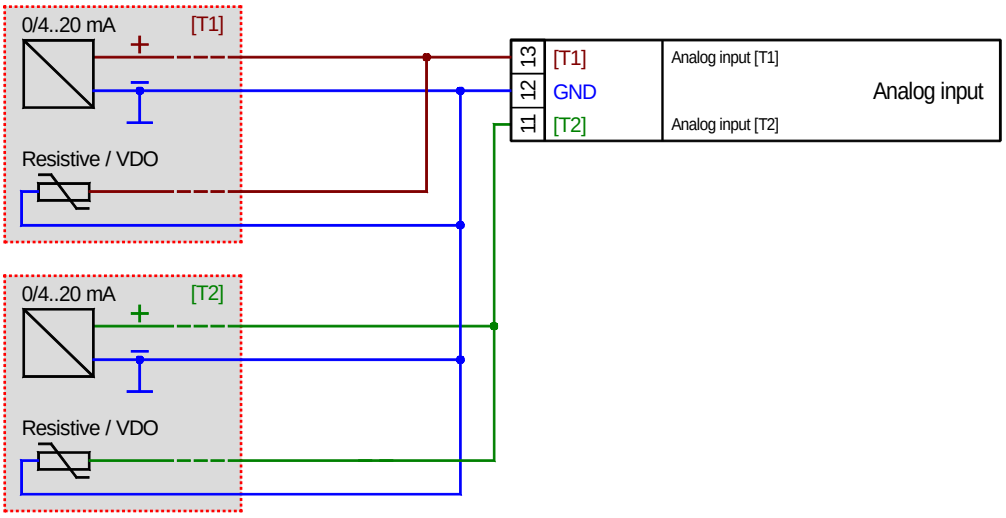

Figure 5-27: Analog inputs (*FlexIn*)

Connect in application mode ... {0}	{1o}	{1oc}	{2oc}	Terminal	Description	A_{max}
✓	✓	✓	✓	13	Analog input [T1], alternatively the following sensors: - 0/4..20 mA - resistor - VDO, 0..180 Ohm#VDO - VDO, 0..380 Ohm#VDO - Pt100	2.5 mm²
✓	✓	✓	✓	12	Common (GND)	2.5 mm²
✓	✓	✓	✓	11	Analog input [T2], alternatively the following sensors: - 0/4..20 mA - resistor - VDO, 0..180 Ohm#VDO - VDO, 0..380 Ohm#VDO - Pt100	2.5 mm²

#VDO - please download a catalog of all available VDO sensors at the VDO homepage (http://www.vdo.com/siemens)

Table 5-22: Analog inputs (*FlexIn*) - terminal assignment

© Woodward

Katolight Service - Master Repair Manual - Page 1750

Interfaces

Overview

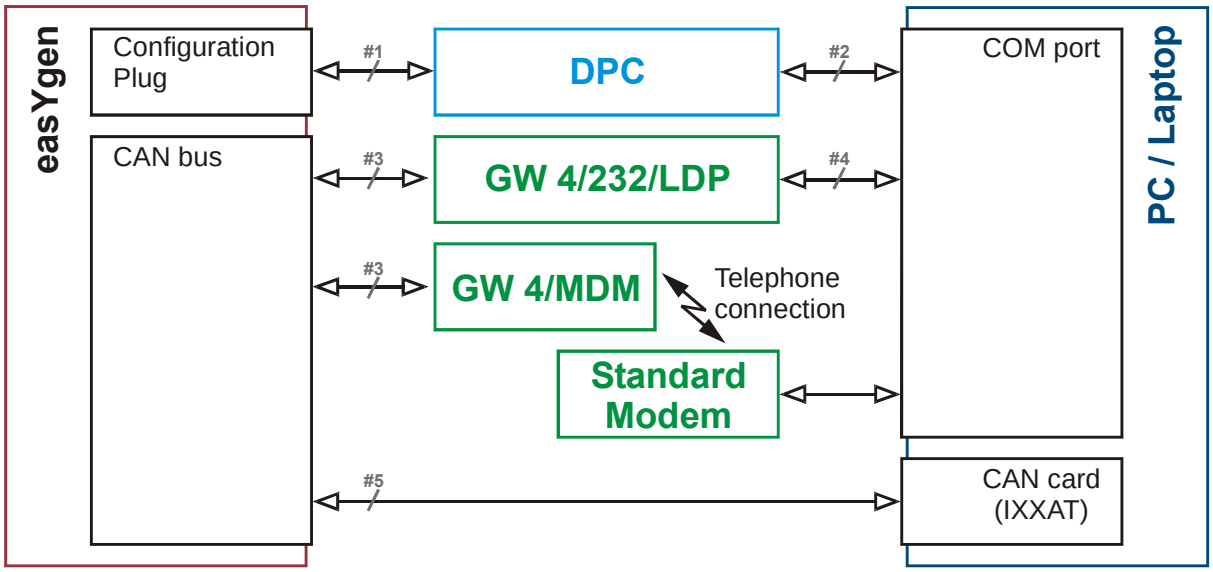

Figure 5-28: Interfaces - overview

Nr.	Connection between ... ... from ...	... to ...
#1	easYgen [DPC connector]	DPC
#2	DPC	PC [COM-Port]
	PIN 1	PIN 4 (connect with PIN 8)
	PIN 2	PIN 3
	PIN 3	PIN 2
	PIN 4	PIN 1
	PIN 5	PIN 5
	N/A	N/A
	PIN 7	PIN 8 (connect with PIN 4)
	PIN 8	PIN 7
	PIN 9	PIN 9
		Connect PIN4/8
#3	easYgen [CAN terminals]	GW 4 [CAN terminals]
	Terminal 3 - CAN-L	Terminals X5 - CAN-L
	Terminal 4 - CAN-H	Terminals X4 - CAN-H
#4	GW 4 [RS232 terminals]	PC [COM port, submin-D, 9pole, female]
	Terminal Y1 - RxD	PIN 3 - TxD
	Terminal Y2 - RTS	PIN 8 - CTS
	Terminal Y3 - GND	PIN 5 - GND
	Terminal Y4 - CTS	PIN 7 - RTS
	Terminal Y5 - TxD	PIN 3 - RxD
#5	easYgen [CAN terminals]	PC [CAN port, submin-D, 9pole, female]
	Terminal 3 - CAN-L	PIN 7 - CAN-H
	Terminal 4 - CAN-H	PIN 2 - CAN-L
	CAN termination resistor between terminals 3/4	CAN termination resistor between terminals 2/7

Table 5-23: Interfaces - connection overview

Katolight Service - Master Repair Manual - Page 1751

CAN bus (*FlexCAN*)

Wiring

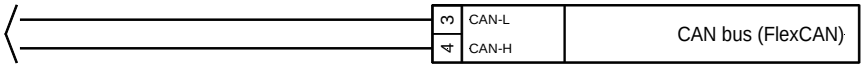

Figure 5-29: Interfaces - CAN bus (*FlexCAN*)

Connect in application mode ...			
{0}	{1o}	{1oc}	{2oc}
✓	✓	✓	✓
✓	✓	✓	✓

Terminal	Description		A_{max}
3	CAN bus (*FlexCAN*)	CAN-L	2.5 mm²
4		CAN-H	2.5 mm²

Shielding

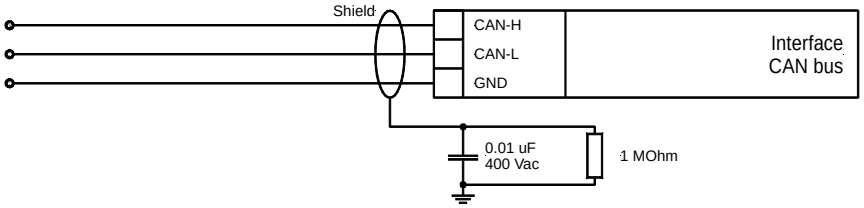

Figure 5-30: Interfaces - CAN bus - wiring of shielding

DPC - Direct Configuration Cable

NOTE

Please note that the configuration via the direct configuration cable DPC (P/N 5417-557) is possible starting with Revision B (first delivered July 2003). If you have an older model please contact technical sales.

© Woodward

Katolight Service - Master Repair Manual - Page 1752

Chapter 6.
Technical Data

Name plate

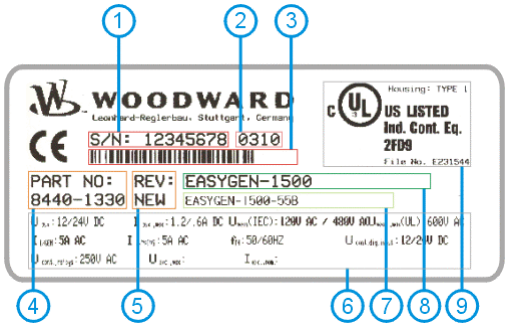

1	S/N	Serial number (numerical)
2	S/N	Date of production (YYMM)
3	S/N	Serial number (Barcode)
4	P/N	Item number
5	REV	Item revision number
6	Details	Technical data
7	Type	Description (short)
8	Type	Description (long)
9	UL	UL sign

Measuring values, voltages ---------- ⅄/Δ

- Measuring voltages
  [1] 120 Vac (terminals 22/24/26/28 & 14/16/18/20)
  Rated value (Vn) ..... 69/120 Vac
  Maximum value (Vmax) ..... max. 86/150 Vac

  [5] 480 Vac (terminals 23/25/27/29 & 15/17/19/21)
  Rated value (Vn) ..... 277/480 Vac
  Maximum value (Vmax) ..... max. 346/600 Vac

- Measuring frequency ..... 50/60 Hz (40.0..70.0 Hz)
- Accuracy ..... Class 1
- Input resistance per path ..... [1] 0.498 MΩ, [5] 2.0 MΩ
- Maximum power consumption per path ..... < 0.15 W

Measuring values, currents ---------- isolated

- Measuring current
  [../1] Rated value (In) ..../1 A
  [../5] Rated value (In) ..../5 A

- Accuracy ..... Class 1
- Linear measuring range
  Generator (terminals 5-8) ..... 3.0 × In
  Mains/ground current (terminals 1/2) ..... 1.5 × In
- Maximum power consumption per path ..... < 0.15 VA
- Rated short-time current (1 s)
  [..1/ A] ..... 50.0 × In
  [../5 A] ..... 10.0 × In

Ambient variables ----------

- Power supply ..... 12/24 Vdc (6.5..40.0 Vdc)
- Intrinsic consumption ..... max. 15 W
- Ambient temperature
  Storage ..... -30..+80 °C / -22..176 °F
  Operation ..... -20..+70 °C / -4..158 °F
- Ambient humidity ..... 95 %, non condensing

Discrete inputs ---------- isolated

- Input range ($U_{Cont, digital input}$) ..... Rated voltage 12/24 Vdc (6.5..40.0 Vdc)
- Input resistance ..... approx. 6.7 kΩ

Relay outputs ---------- potential free

- Contact material ..... AgCdO
- General purpose (GP) ($U_{Cont, relay output}$)
  AC ..... 2.00 Aac@250 Vac
  DC ..... 2.00 Adc@24 Vdc
  0.36 Adc@125 Vdc
  0.18 Adc@250 Vdc
- Pilot duty (PD) ($U_{Cont, relay output}$)
  AC B300
  DC ..... 1.00 Adc@24 Vdc
  0.22 Adc@125 Vdc
  0.10 Adc@250 Vdc

Analog inputs ---------- freely scaleable

- Resolution ..... 10 Bit
- 0/4..20 mA input ..... internal load 50 Ω
- 0..180/380 Ω input ..... load current ≤ 2.3 mA

Magnetic Pickup Input ---------- capacitive decoupled

- Input impedance ..... min. approx. 17 kΩ
- Input voltage ..... see Figure 5-21

© Woodward

Katolight Service - Master Repair Manual - Page 1754

Interface ----------

Service interface
- Version RS232
- Signal level 5V
  Level conversion and insulation by using DPC (P/N 5417-557)

CAN bus interface ..... **isolated**
- Insulation voltage ..... 1,500 Vdc
- Version ..... CAN bus
- Internal line termination ..... Not available

Battery (models with battery buffered real-time clock only) ----------
- Type ..... NiCd
- Durability (at operation without power supply) ..... approx. 5 years
- Battery field replacement ..... not possible

Housing ----------

• **Model "1500"**
- Type ..... APRANORM DIN 43 700
- Dimensions (W × H × D) ..... 192 × 144 × 64 mm
- Front cutout (W × H) ..... 186 [+1.1] × 138 [+1.0] mm

• **Model "1400"**
- Type ..... Phoenix, Um122
- Dimensions (W × H × D) ..... 194 × 128 × 50 mm

• **all Models**
- Wiring ..... screw-plug-terminals 2.5 mm²
- Recommended locked torque ..... 0.5 Nm
  use 60/75 °C copper wire only
  use class 1 wire only or equivalent
- Weight ..... approx. 800 g

Protection ----------

• **Model "1500"**
- Protection system ..... IP42 from front at professional installation
  IP54 from front with gasket (gasket: P/N 8923-1043)
  IP21 from back
- Front folio ..... insulating surface

• **Model "1400"**
- Protection system IP20

• **all Models**
- EMC test (CE) ..... tested according to applicable EN guidelines
- Listings ..... CE marking; UL listing for ordinary locations
- Type approval ..... UL/cUL listed, Ordinary Locations, File No.: 231544
- Marine certification ..... GL, LR, others upon request

Katolight Service - Master Repair Manual - Page 1755

Chapter 7.
Accuracy

Measuring value		Display	Accuracy	Notes
Frequency				
Generator	f_{L1N}, f_{L2N}, f_{L3N}	15.0..85.0 Hz	1 %	-
Mains	f_{L1N}, f_{L2N}, f_{L3N}	40.0..85.0 Hz	1 %	-
Voltage				
Generator	U_{L1N}, U_{L2N}, U_{L3N},	0..650 kV	1 %	Transformer ratio selectable
Mains	U_{L1N}, U_{L2N}, U_{L3N},	0..650 kV	1 %	Transformer ratio selectable
Current				
Generator	I_{L1}, I_{L2}, I_{L3}	0..32,000 A	1 %	-
Max. value	I_{L1}, I_{L2}, I_{L3}	0..32,000 A	1 %	Slave pointer
Mains/ground current	I_{L1}	0..32,000 A	1 %	-
Real power				
Current total real power value		-2..0..+2 GW	2 %	-
Reactive power				
Current value in L1, L2, L3		-2..0..+2 Gvar	2 %	-
cos φ				
Current value cos φL1		lg0.00..1.00..ld0.00	2 %	-
Miscellaneous				
Real energy		0..4,200 GWh		not calibrated
Operating hours		4×10^9 h		-
Maintenance call		0..9,999 h		-
Start counter		0..65,535		-
Battery voltage		6.5..40 V	1 %	-
Pickup speed		$f_n \pm 40$ %		-
Analog inputs				
Pt100		-180..0..+800 °C		not calibrated
0..180 Ohm		freely scaleable		for VDO sensors
0..360 Ohm		freely scaleable		for VDO sensors
PTC		freely scaleable		-
0/4..20 mA		freely scaleable		-

Reference conditions (to measure the accuracy):

- Input voltage ..... sinusoidal rated voltage
- Input current..... sinusoidal rated current
- Frequency..... rated frequency ± 2 %
- Power supply..... rated voltage ± 2 %
- Power factor cos φ 1.00
- Ambient temperature..... 23 °C ± 2 K
- Warm-up period..... 20 minutes

© Woodward

Katolight Service - Master Repair Manual - Page 1756

Chapter 8.
Declaration of Conformity

Declaration of Conformity

WOODWARD

Type: easYgen-1000 Series

Manufacturer

Woodward Governor Company
Leonhard-Reglerbau GmbH

Handwerkstrasse 29
70565 Stuttgart - Germany

Tel: +49 (711) 789 54-0
Fax: +49 (711) 789 54-100

E-mail: sales-stuttgart@woodward.com

Type

easYgen-1000 Series
Model: [easYgen-1100, easYgen-1200, easYgen-1400, easYgen-1500]

Product description

Microprocessor driven engine and generator control with integrated monitoring, protection, and control

The named product fulfills the following directives of the European Community:

73/23/EEC Low Voltage Switchgear Directive
'Council directive on the harmonization of the laws of member state relating to electrical equipment designed for use within certain voltage limits '

89/336/EEC Electromagnetic Compatibility Directive
"Council directive on the approximation of the laws of the member states relating to electromagnetic compatibility"

The conformity of the indicated product with the essential safety requirements of the standards is proven by the strict observation of the directives mentioned.

CE The company Woodward Governor Company Leonhard-Reglerbau GmbH, Handwerkstrasse 29, 70565 Stuttgart, Germany, has checked the product and provided it with the opposite indicated sign.

70565 Stuttgart, August 18, 2003

Gerd Zoellmer (Chief R+D Manager)

Druck/Printed 18.08.2003
Seite/Page 1 von/of 1
C:\DOKUME~1\mkoch\LOKALE~1\Temp\easYgen-1000 - Declaration of Conformity 2003-08-18.doc

© Woodward Governor Company Leonhard-Reglerbau GmbH Stuttgart +49 (0) 711 789 54-0

Katolight Service - Master Repair Manual - Page 1757

Declaration of Conformity

WOODWARD

Type: easYgen-1000 Series

European Norm	German Norm	VDE Classification	Description
73/23/EEC - Low Voltage Switchgear Directive			
EN 50178	DIN EN 50178 Edition: 1998-04	VDE 0160	Electronic equipment for use in electrical power installations and their assembly into electrical power installations
89/336/EEC - Electromagnetic Compatibility Directive			
EN 50081-2	DIN EN 50081-2 Edition: 1994-09	VDE 0839 Part 81-2	Electromagnetic compatibility (EMC) Generic emission standard Part 2: Industrial environment
EN 61000-6-2	DIN EN 61000-6-2 Edition: 2002-08	VDE 0839 Part 6-2	Electromagnetic compatibility (EMC); Part 2: Environment Section 6: Assessment of the emission levels in the power supply of industrial plants as regards low-frequency conducted disturbances
EN 61000-4-2	DIN EN 61000-4-2 Edition: 2001-12	VDE 0847 Part 4-2	Electromagnetic compatibility (EMC) Part 4: Testing and measuring techniques Section 2: Electrostatic discharge immunity test
EN 61000-4-3	DIN EN 61000-4-3 Edition: 2001-12	VDE 0847 Part 3	Electromagnetic compatibility (EMC) Basic Immunity Standard Part 4-3: Radiated, radio-frequency electromagnetic field – immunity test.
EN 61000-4-4	DIN EN 61000-4-4 Edition: 2002-07	VDE 0847 Part 4-4	Electromagnetic compatibility (EMC) Part 4: Testing and measuring techniques Section 4: Electrical fast transient/burst immunity test
EN 61000-4-5	DIN EN 61000-4-5 Edition: 2001-12	VDE 0847 Part 4-5	Electromagnetic compatibility (EMC) Part 4: Testing and measuring techniques Section 5: Surge immunity test
EN 61000-4-6	DIN EN 61000-4-6 Edition: 2001-12	VDE 0843 Part 4-6	Electromagnetic compatibility Basic immunity standard Part 6: Immunity to conducted disturbances, induced by radio frequency fields
EN 55011	DIN EN 55011 Edition: 2000-05	VDE 0875 Part 11	Suppression of radio disturbances caused by electrical appliances and systems; Limits and methods of measurement of radio disturbance characteristics of industrial, scientific and medical (ISM) radio-frequency equipment

© Woodward Governor Company Leonhard-Reglerbau GmbH Stuttgart +49 (0) 711 789 54-0

Katolight Service - Master Repair Manual - Page 1758

We appreciate your comments about the content of our publications.

Please send comments to: icinfo@woodward.com

Please include the manual number from the front cover of this publication.

Woodward Governor Company
Leonhard-Reglerbau GmbH
Handwerkstrasse 29 - 70565 Stuttgart - Germany
Phone +49 (711) 789 54-0 • Fax +49 (711) 789 54-100
sales-stuttgart@woodward.com

Homepage

http://www.woodward.com/smart-power

Woodward has company-owned plants, subsidiaries, and branches, as well as authorized distributors and other authorized service and sales facilities throughout the world.

Complete address/phone/fax/e-mail information for all locations is available on our website (www.woodward.com).

04/2/S

easYgen-1000
Genset Control

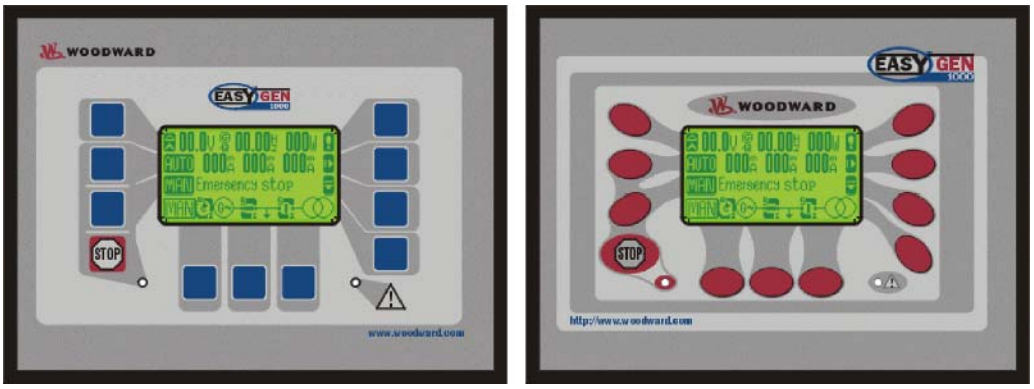

KATOLIGHT CORPORATION

Katolight Equivalent: KSGC-i



EASY GEN 1000

Operation
Software Version 1.0xxx

Manual 37181



WARNING

Read this entire manual and all other publications pertaining to the work to be performed before installing, operating, or servicing this equipment. Practice all plant and safety instructions and precautions. Failure to follow instructions can cause personal injury and/or property damage.

The engine, turbine, or other type of prime mover should be equipped with an overspeed (overtemperature, or overpressure, where applicable) shutdown device(s), that operates totally independently of the prime mover control device(s) to protect against runaway or damage to the engine, turbine, or other type of prime mover with possible personal injury or loss of life should the mechanical-hydraulic governor(s) or electric control(s), the actuator(s), fuel control(s), the driving mechanism(s), the linkage(s), or the controlled device(s) fail.



CAUTION

To prevent damage to a control system that uses an alternator or battery-charging device, make sure the charging device is turned off before disconnecting the battery from the system.

Electronic controls contain static-sensitive parts. Observe the following precautions to prevent damage to these parts.

- **Discharge body static before handling the control (with power to the control turned off, contact a grounded surface and maintain contact while handling the control).**
- **Avoid all plastic, vinyl, and Styrofoam (except antistatic versions) around printed circuit boards.**
- **Do not touch the components or conductors on a printed circuit board with your hands or with conductive devices.**

Important definitions



WARNING

Indicates a potentially hazardous situation that, if not avoided, could result in death or serious injury.



CAUTION

indicates a potentially hazardous situation that, if not avoided, could result in damage to equipment.



NOTE

Provides other helpful information that does not fall under the warning or caution categories.

Woodward Governor Company reserves the right to update any portion of this publication at any time. Information provided by Woodward Governor Company is believed to be correct and reliable. However, no responsibility is assumed by Woodward Governor Company unless otherwise expressly undertaken.

© Woodward Governor Company
All Rights Reserved.

Katolight Service - Master Repair Manual - Page 1762

Content

CHAPTER 1. GENERAL INFORMATION 5
Linked documents 5
Short description 6

CHAPTER 2. NAVIGATION / OPERATION 9
Navigation 10
Operation 16
Display 17
Mode 18
Operation 19
Navigation 20

CHAPTER 3. FUNCTIONAL DESCRIPTION 21
Overview 21
Application modes 22
Application mode {BM} - Basic Mode 22
Application mode {1o} – 0 CB mode 22
Application mode {1oc} – 1 CB mode 22
Application mode {2oc} – 2 CB mode 22
Operating modes 23
Operating mode STOP 23
Operating mode MANUAL 24
Operating mode AUTOMATIC 25

CHAPTER 4. CONFIGURATION 27
Structure of the parameters 27
Parameters 29
Language 29
Password 29
Display contrast 30
Acknowledgement of centralized alarm 30
Real-time clock - time 30
Real-time clock - date 31
Code levels 31
Password 32
Factory (default) values 32

APPENDIX A. MESSAGES 33
Status messages 33
Alarm messages 34

Katolight Service - Master Repair Manual - Page 1763

Illustrations and Tables

Illustrations

Figure 1-2: Functional overview 6
Figure 2-1: Front panel and display 9
Figure 2-2: Screens and Menus - Overview 10
Figure 2-3: Screen - Level overview 16
Figure 4-1: Configuration screens (overview) 27

Tables

Table 1-1: Manual - Overview 5
Table 2-4: Display - Measuring values 17
Table 3-1: Functional description - Overview 21
Table 3-2: Functional description - AMF conditions 26

© Woodward

Katolight Service - Master Repair Manual - Page 1764

Chapter 1.
General Information

Linked documents

Type		English	German
easYgen-1000 Series			
easYgen-1000 - Installation		37203	GR37203
easYgen-1000 - Configuration		37204	GR37204
easYgen-1000 - Operation	this manual ⇨	37181	GR37181
easYgen-1000 - Application		37205	GR37205
easYgen-1000 - Interface		37262	GR37262
Additional Manuals			
IKD 1 - Manual		37135	GR37135
Discrete expansion board with 8 discrete inputs and 8 relay outputs that can be coupled via the CAN bus to the control unit. Evaluation of the discrete inputs as well as control of the relay outputs is done via the control unit.			
IKN 1 - Manual		37136	GR37136
20channel NiCrNi temperature scanner that monitors the temperature values for exceeding or falling below a threshold value, measured through senders on the IKN 1. A configured relay on the board of the IKN 1 will trip. The IKN 1 can be coupled with the control unit using the CAN bus to display measuring values as well as alarms.			
LeoPC - Manual		37146	GR37146
PC program for visualization, for configuration, for remote control, for data logging, for language upload, for alarm and user management and for management of the event recorder. This manual describes the use of the program.			
LeoPC - Manual		37164	GR37164
PC program for visualization, for configuration, for remote control, for data logging, for language upload, for alarm and user management and for management of the event recorder. This manual describes the programming of the program.			
GW 4 - Manual		37133	GR37133
Gateway for transferring the CAN bus to any other interface or bus.			
ST 3 - Manual		37112	GR37112
Control to govern the air fuel ratio of a gas engine. The ratio will be directly measured though a Lambda probe and controlled to a configured value.			

Table 1-1: Manual - Overview

Katolight Service - Master Repair Manual - Page 1765

Short description

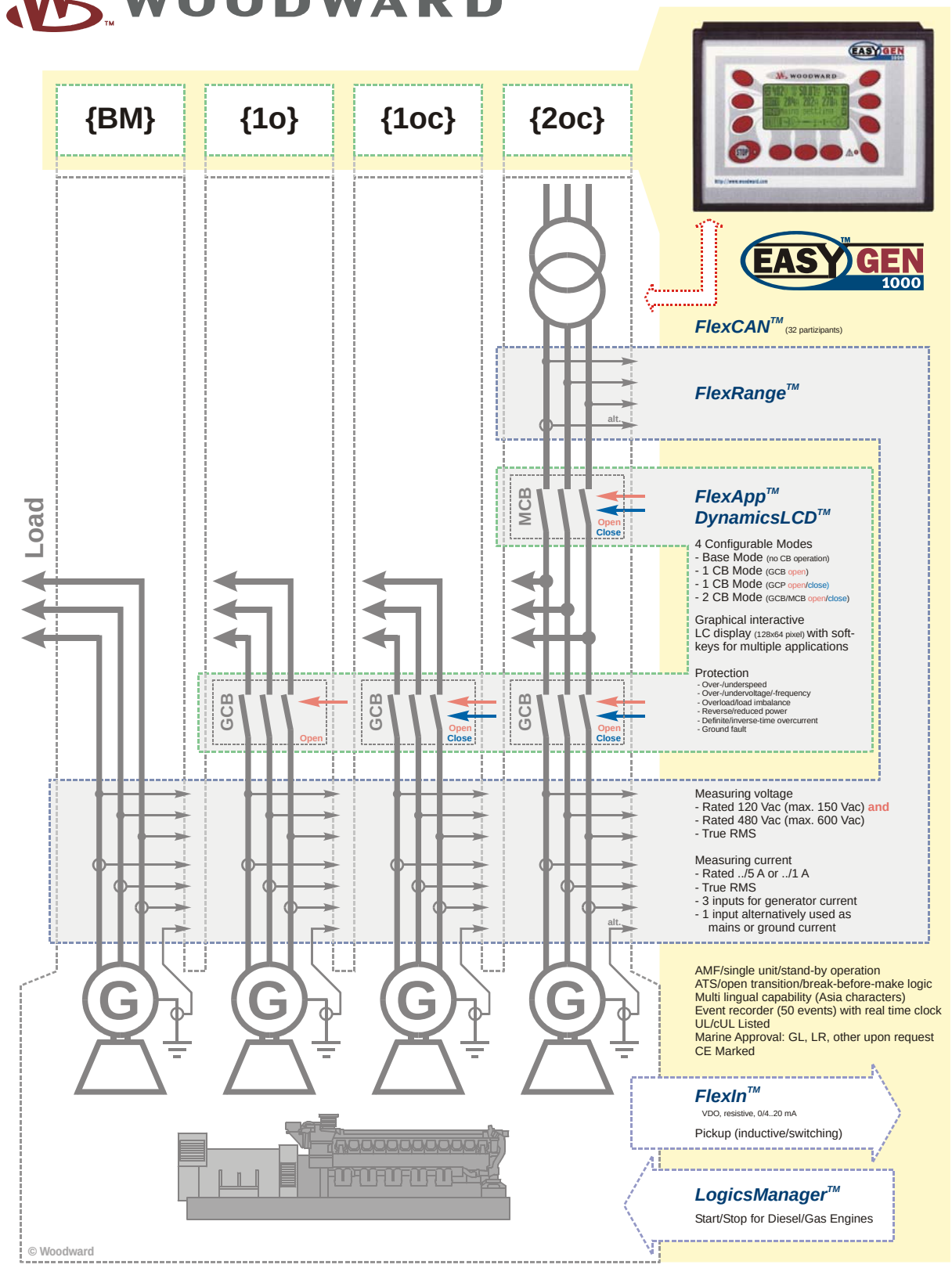

Figure 1-2: Functional overview

Katolight Service - Master Repair Manual - Page 1766

The easYgen-1000 Series generator set controllers provide the following functions:

- Gen-set control
- Engine and generator protection
- Engine data measurement -
  - including oil pressure and temperature, coolant temperature, battery voltage, speed, service hours, etc.
- Generator data measurement -
  - including voltage, current, power, kvar, kW, kWh, etc.
- Engine crank sequencing
- Alarm display with circuit breaker trip and engine shutdown
- AMF (automatic mains failure) standby genset control, with automatic engine start on a mains failure detection, with open transition breaker control
- CAN bus communications to engine controllers and plant management systems

Type designation is as follows:

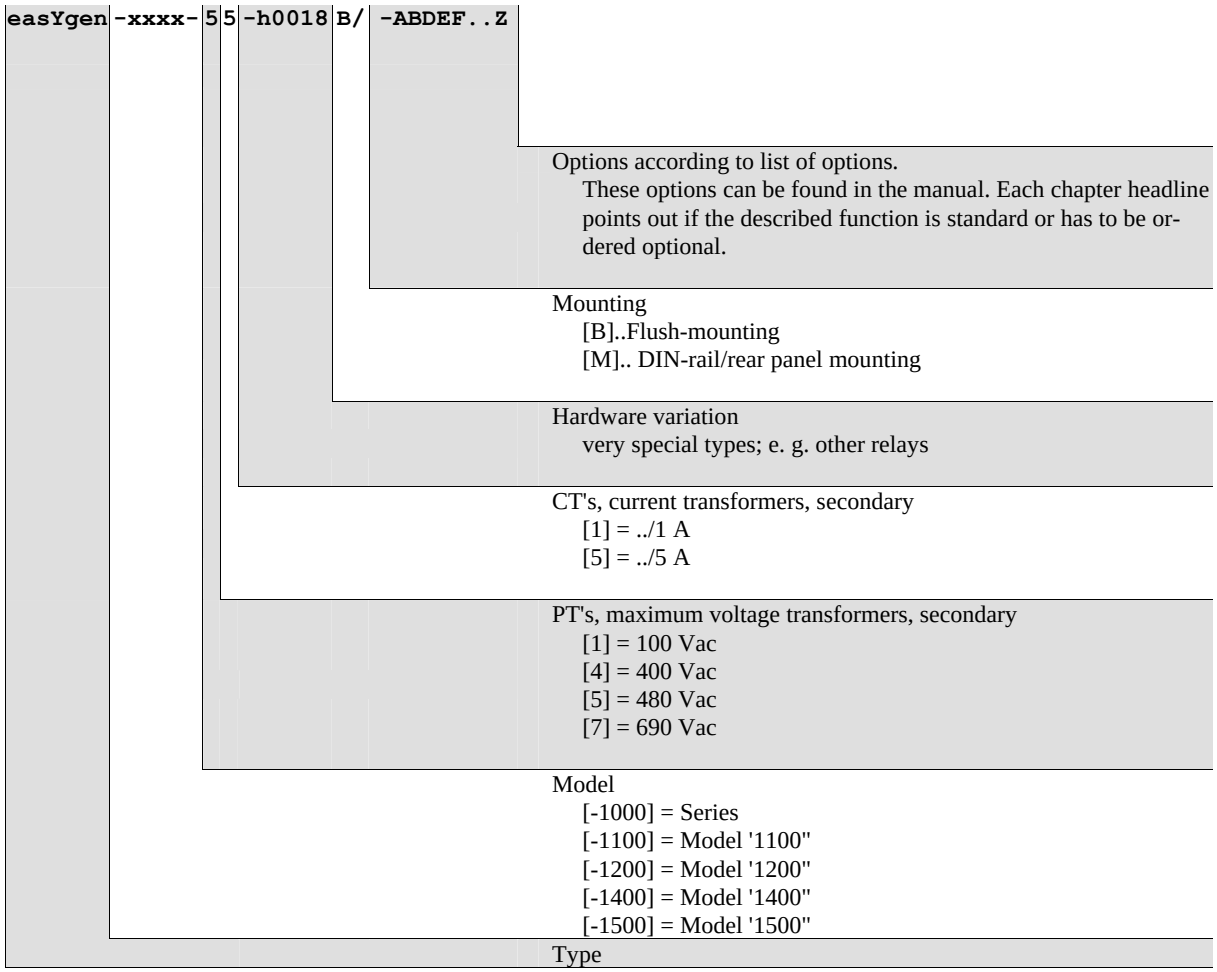

Examples:
EASYGEN-1500-55B (standard unit, 120 & 480 Vac inputs, ../5 A measuring inputs, flush-mounting)
EASYGEN-1500-51B (standard unit, 120 & 480 Vac inputs,. ../1 A measuring inputs, flush-mounting)
EASYGEN-1400-55M (standard unit, 120 & 480 Vac inputs, ../5 A measuring inputs, DIN-rail mounting)
EASYGEN-1400-51M (standard unit, 120 & 480 Vac inputs,. ../1 A measuring inputs, DIN-rail mounting)

Katolight Service - Master Repair Manual - Page 1767

Intended Use The unit must only be operated according to the guidelines described in this manual. The prerequisite for a proper and safe operation of the product is correct transportation, storage, and installation as well as careful operation and maintenance.

NOTE

This manual has been developed for an unit fitted with all available options. Inputs/outputs, functions, configuration screens and other details described, which do not exist on your unit may be ignored.

The present manual has been prepared to enable the installation and commissioning of the unit. On account of the large variety of parameter settings, it is not possible to cover every possible combination. The manual is therefore only a guide. In case of incorrect entries or a total loss of functions, the default settings can be taken from the enclosed list of parameters.

© Woodward

Katolight Service - Master Repair Manual - Page 1768

Chapter 2.
Navigation / Operation

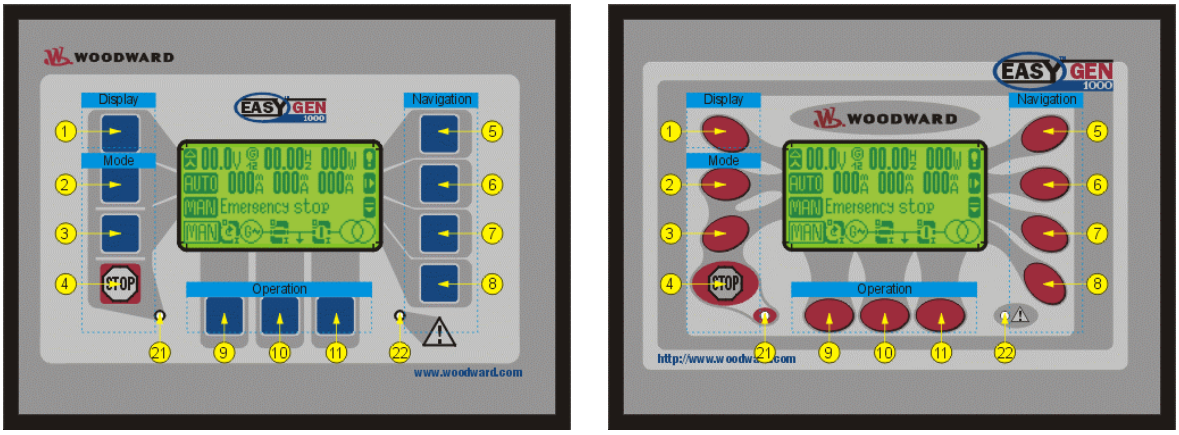

easYgen-1000 "BLUE" easYgen-1000 "RED"

Figure 2-1: Front panel and display

Figure 2-1 illustrates the front panel/display which includes push buttons, LED's and the LC display. A short description of the front panel is given below.

NOTE



This push button is ALWAYS active and will stop the engine when pressed.

Fct.-block

Function blocks

Buttons that have the same function within one screen are grouped into function blocks. The function blocks are defined as:

Display..... Change the method of voltage and power calculations displayed (page 16).
Mode..... Change the mode of operation (page 18).
Operation.... Used to perform manual operation of the genset (page 19).
Navigation... Navigation between system and configuration screens, and alarm list (page 19).

1 2 3 4
5 6 7 8
9 10 11

Push buttons

The push buttons on the front panel are assigned to softkeys on the display. Each softkey is assigned to a function depending on the mode of operation.

20

LC display

The display contains softkeys, measuring values, modes of operation and alarms. The structure of the screens as well as the description are detailed in the "Navigation" chapter (page 10).

21 22

LED

The left LED indicates that the unit is in STOP mode. The right LED indicates that alarm messages are present in the unit.

Katolight Service - Master Repair Manual - Page 1769

Navigation

Figure 2-2 illustrates an overview for the navigation via the display. This demonstration will help the user through the menus and screens of the easYgen. The following and previous screens are marked in Yellow, the active screen is marked in Red. If submenus are present they are marked in Grey.

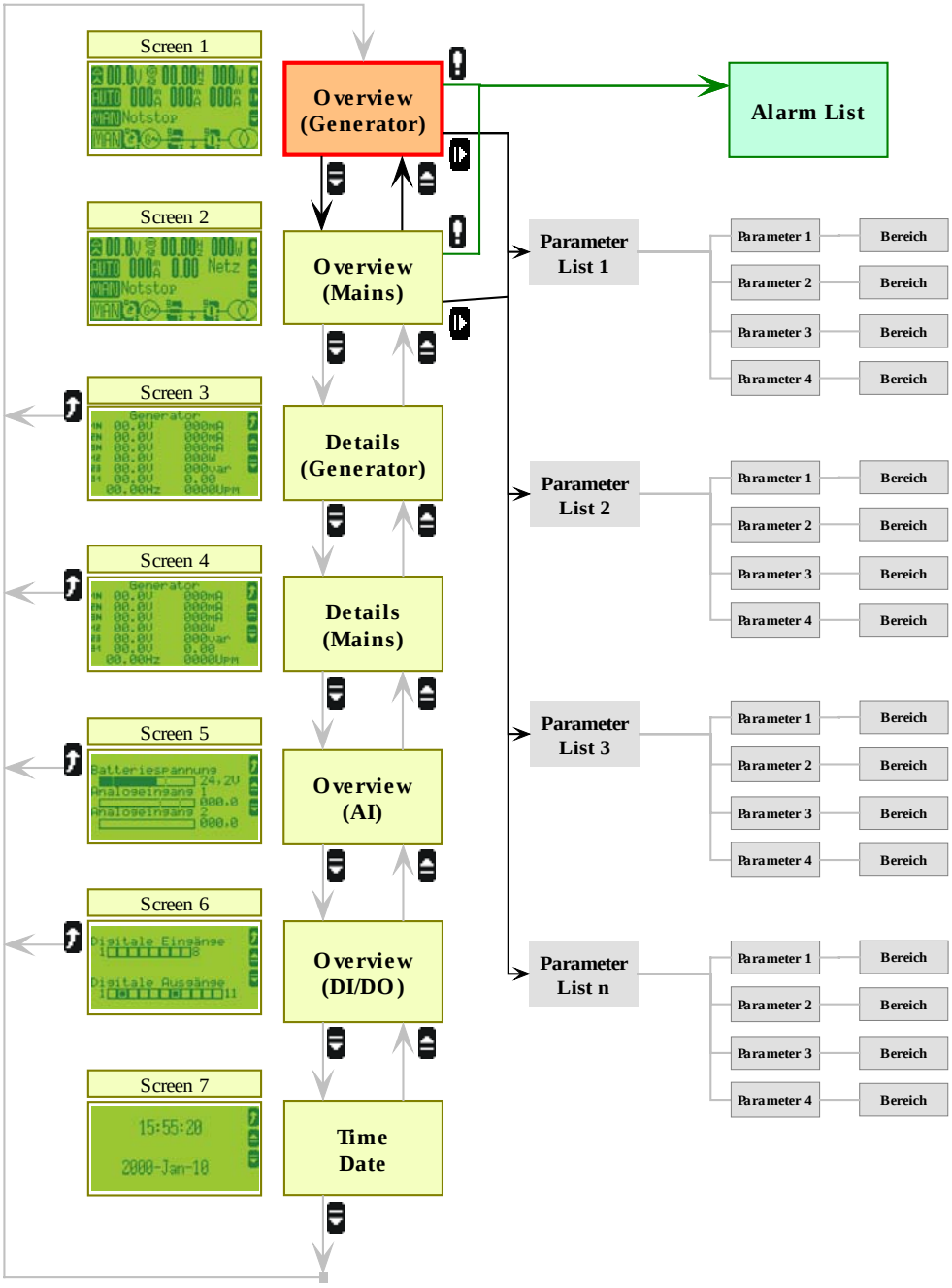

Figure 2-2: Screens and Menus - Overview

© Woodward

Katolight Service - Master Repair Manual - Page 1770

Screen "Generator values - overview" / "Starting screen" **[all application modes]**



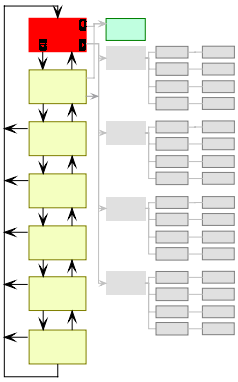

This screen appears upon startup of the unit. The generator symbol (G) indicates that generator values are displayed.

Navigate to the next screen.

Display the parameters.

Switch the display of the generator voltages (between star and wye voltages).

Display the alarm messages (of the event recorder).

Operating mode MANUAL: start/stop engine.

Operating mode MANUAL: GCB(/MCB) open/close.

Change into operating mode AUTOMATIC.

Change into operating mode MANUAL.

Change into operating mode STOP.

Screen "Mains values - overview" **[only application mode {2oc}]**



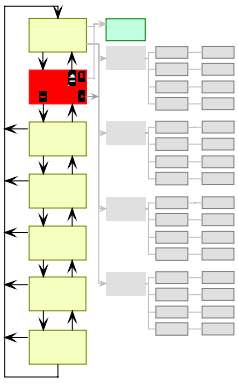

This screen appears after pressing the softkey once. The mains symbol (M) indicates that the mains measuring values are displayed.

Navigate to the next screen.

Navigate to the previous screen.

Switch the display of the mains voltages (between star and delta voltages).

Display the alarm messages (of the event recorder).

Operating mode MAN: start/stop engine.

Operating mode MAN: GCB(/MCB) open/closed.

Change into operating mode AUTOMATIC

Change into operating mode MAN.

Change into operating mode STOP.

Katolight Service - Master Repair Manual - Page 1771

Screen "Generator values - Details" **[all application modes]**

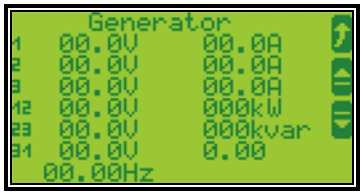

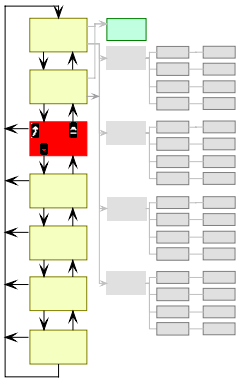

This screen appears after pressing the softkey again. Here all measured values of the generator are displayed in one screen.

Navigate to the next screen.

Navigate to the previous screen.

Jump to the start screen.

Change into operating mode STOP.

1 / **2** / **3**.....Generator voltages V_{L1N} / V_{L2N} / V_{L3N} and generator currents I_{L1} / I_{L2} / I_{L3}
12 / **23** / **31**....Gnerator voltages V_{L12} / V_{L23} / V_{L31}
00.00Hz.....Generator frequency
000kW.....Generator real power
000kvar.....Generator reactive power
0.00.....Generator power factor

Screen "Mains values - Details" **[only application mode {2oc}]**

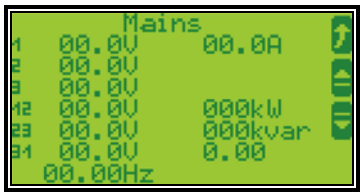

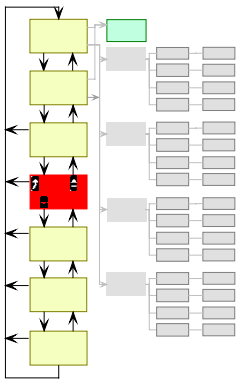

This screen appears after pressing the softkey again. Here all measured values of the mains are displayed in one screen.

Navigate to the next screen.

Navigate to the previous screen.

Jump to the start screen.

Change into operating mode STOP.

1 / **2** / **3**.....Mains voltages V_{L1N} / V_{L2N} / V_{L3N} and mains current I_L
12 / **23** / **31**....Mains voltages V_{L12} / V_{L23} / V_{L31}
00.00Hz.....Mains frequency
000kW.....Mains real power
000kvar.....Mains reactive power
0.00.....Mains power factor

© Woodward

Katolight Service - Master Repair Manual - Page 1772

Screen "Slave pointer current" **[all operating modes]**

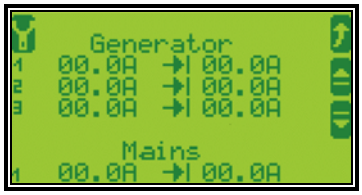

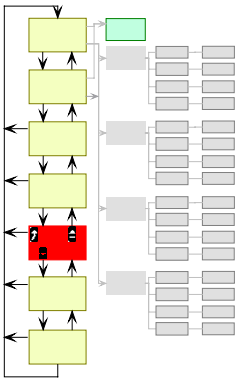

This screen appears after pressing the softkey again. Here the slave pointers (maximum currents) are displayed.

Navigate to the next screen.

Navigate to the previous screen.

Jump to the start screen.

Left of the →| sign: Current value
Right of the →| sign: Maximum values (slave pointer)

Change to configuration menu and reset the maximum values.

Change into operating mode STOP.

1 / **2** / **3** ..... Generator current I_{L1} / I_{L2} / I_{L3} and mains current I_L

Screen "Analog values - Details" **[all operating modes]**

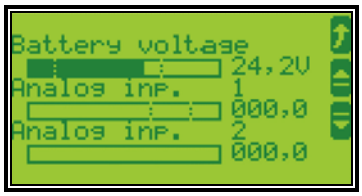

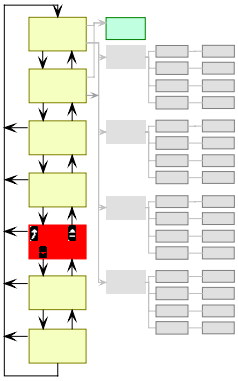

This screen appears after pressing the softkey again. Here all analog measured values are displayed graphically and numerically.

Navigate to the next screen.

Navigate to the previous screen.

Jump to the start screen.

Change into operating mode STOP.

Katolight Service - Master Repair Manual - Page 1773

Screen "Discrete inputs / relay outputs – Status display" **[all application modes]**

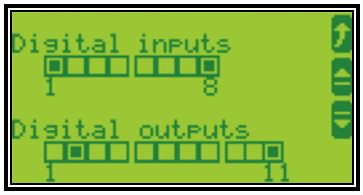

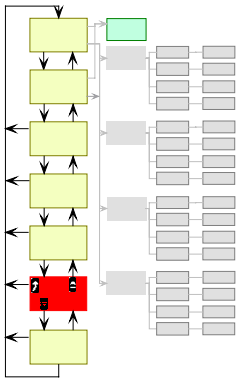

This screen appears after pressing the softkey again. Discrete input and relay output status are displayed.

Navigate to the next screen.

Navigate to the previous screen.

Jump to the start screen.

Change into operating mode STOP.

Status display of the discrete inputs and relay outputs.
(Note: Whether a discrete input or a relay output is currently physically closed or not, depends on the adjusted logic "NO/NC". This screen gives information whether the inputs/outputs are logically controlled.

The discrete input/the relay output is not set.

The discrete input/the relay output is set.

Screen "Time / Date" **[all operating modes]**

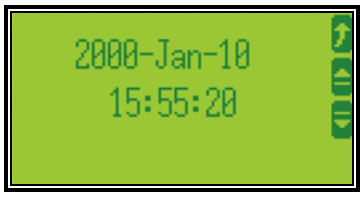

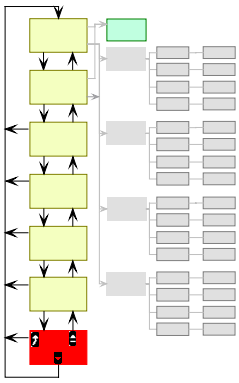

This screen appears after pressing the softkey once more. Here the time and date are displayed.

Navigate to the next screen

Navigate to the previous screen.

Jump to the start screen.

Change into operating mode STOP.

0000-XXX-00 - Date
0000 = Year
XXX = Month
00 = Day
00:00:00 - Time
00 = Hour
00 = Minute
00 = Second

© Woodward

Katolight Service - Master Repair Manual - Page 1774

Screen "Counters" **[all operating modes]**

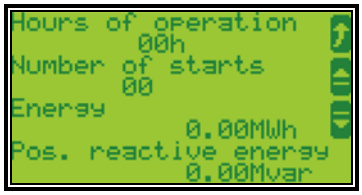

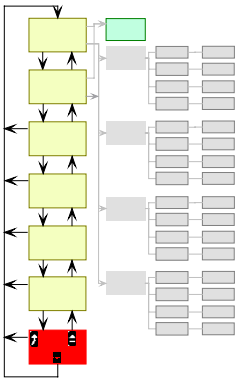

This screen appears after pressing the softkey once more. Here the counters are displayed.

Navigate to the next screen

Navigate to the previous screen.

Jump to the start screen.

Change into operating mode STOP.

Hours of operation 00 h - Operating hours counter
00h = Total operating hours (hours in operation)
Number of starts 00 - Start counter
00 = Total number of starts
Energy 0.00 kWh - Generator real energy
0.00MWh = Total generator real energy
Pos. reactive energy 0.00 Mvar - Generator reactive energy
0.00Mvarh = Total generator reactive energy

Screen "Maintenance in ..." **[all operating modes]**

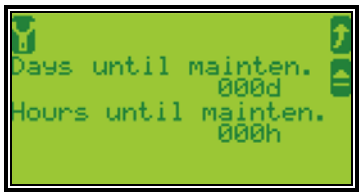

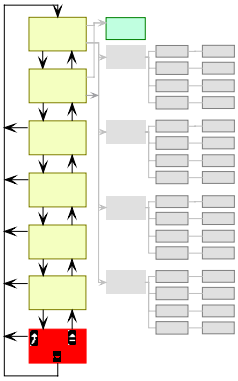

This screen appears after pressing the softkey once more. Here the remaining days/hours to the next maintenance call are displayed.

Navigate to the previous screen.

Jump to the start screen.

Change to configuration menu and reset the maximum values.

Change into operating mode STOP.

Days until mainten. 000d - Remaining maintenance days
000d = Once this days (plus the remaining maintenacnce hours) are exceeded the control will output an alarm message to maintain the genset. With finishing the maintenance the maintenance counters have to be reset.
Hours until maintenc. 000h - Remaining maintenance hours
000h = Once this hours (plus the remaining maintenacnce hours) are exceeded the control will output an alarm message to maintain the genset. With finishing the maintenance the maintenance counters have to be reset.

Katolight Service - Master Repair Manual - Page 1775

Operation

To illustrate values the display is partitioned into different levels which give a concentrated overview of all data.

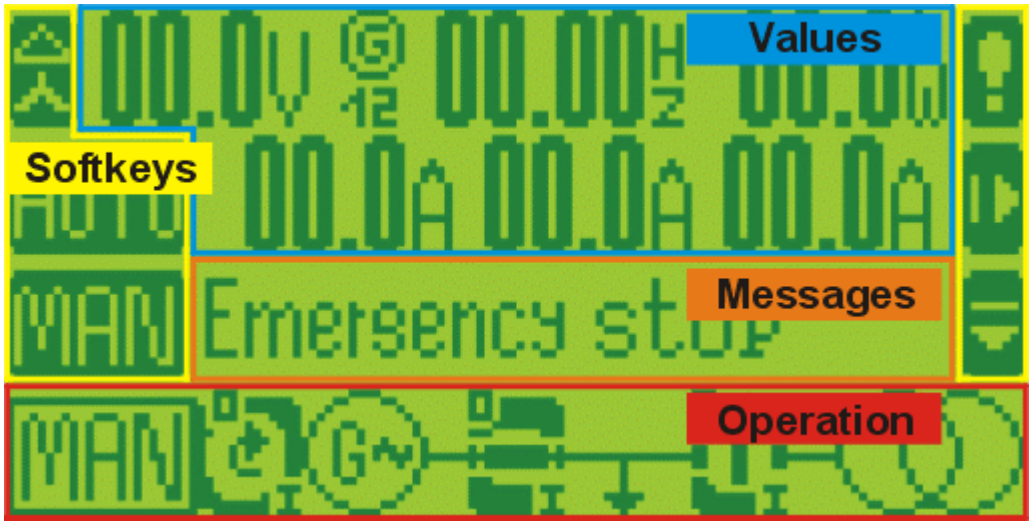

Figure 2-3: Screen - Level overview

"Values"

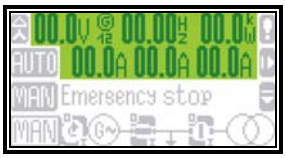

The "values" screen illustrates all power related information including voltages, frequencies, and power values.

"Messages"



The "message" screen shows all active alarms and operations information.

"Operation"

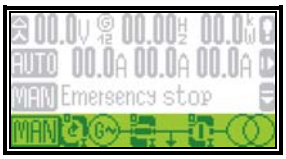

The "operation" screen illustrates a one line diagram of the system application showing current status of the engine and power circuit breakers. This level is also used for manual operation of the genset.

"Softkeys"

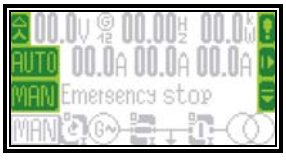

The softkeys permit navigation between screens, levels and functions.

© Woodward

Katolight Service - Master Repair Manual - Page 1776

Display

Softkey "Voltage display"



The voltage display softkey changes the type of power calculations displayed, line-line or line-neutral. The amount of information available from the system depends on the measuring type configured in the control. Table 2-4 illustrates what values are available depending on the configured measurement type.

Selection of meas. point	Measuring point	Scroll display	Symbol of' the displayed voltage		Displayed at parameter setting Delta	Wye
0×	Generator 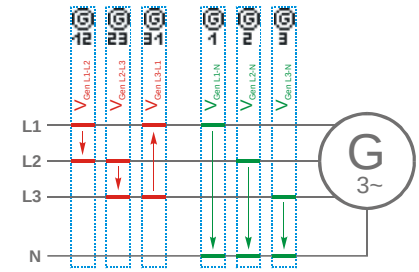	0× (6×)		Delta L1-L2	yes	yes
		1×		Delta L2-L3	yes	yes
		2×		Delta L3-L1	yes	yes
		3×		Wye L1-N	---	yes
		4×		Wye L2-N	---	yes
		5×		Wye L3-N	---	yes
1×	Mains 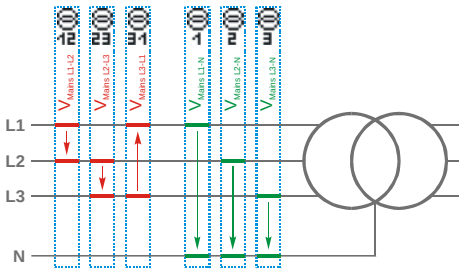	0× (6×)		Delta L1-L2	yes	yes
		1×		Delta L2-L3	yes	yes
		2×		Delta L3-L1	yes	yes
		3×		Wye L1-N	---	yes
		4×		Wye L2-N	---	yes
		5×		Wye L3-N	---	yes

Table 2-4: Display - Measuring values

Katolight Service - Master Repair Manual - Page 1777

Mode



Softkeys "Mode"



By pressing the push buttons AUTO, MAN or STOP the operating mode is selected. Corresponding to the selected application mode different softkeys are activated or deactivated on the display. Furthermore in a engine symbol the selected operating mode is displayed. If the operation mode STOP is selected the LED right beside the push button flashes.



Operating mode STOP

When STOP is selected, the engine is stopped.



Operating mode AUTOMATIC

When AUTOMATIC is selected all engine start/stop functionality and circuit breaker



Operating mode MANUAL

When MANUAL is selected, all engine and breaker control is performed manually via softkeys.

© Woodward

Katolight Service - Master Repair Manual - Page 1778

Operation



Softkeys "Mode"

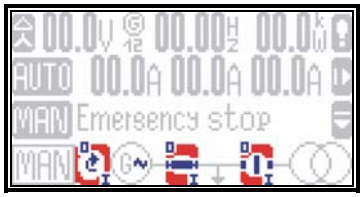

If the unit is in operating mode MANUAL the softkeys are activated for manual operation of the engine and the power circuit breakers. The symbols "0" and "I" indicate additional actions that are processed at the moment.



Engine Start/Stop

Starting process: By pressing this push button the engine is started.
- Successful: If the starting process was successful, the arrow turns within this softkey and the "I" within this softkey lights up.
- Unsuccessful: If the starting process was not successful, the "I" will flash.

Stop process: Pressing the softkey again will stop the engine.
- Successful: If the stop process was successful, the "0" is displayed solidly and the rotating arrow disappears.
- Unsuccessful: If the engine cannot be stopped, the arrow continues to turn and the "0" flashes.



Power circuit breaker open/close (GCB/MCB)

Close: By pressing this push button the circuit breaker is closed.
- Successful: If the closing process was successful, the breaker symbol rotates horizontal and the "I" lights within this softkey.
- Unsuccessful: If the closing process was not successful, the breaker symbol remains vertical and the "I" will flash.

Open: To open this breaker this softkey is pressed as well.
- Successful: If the opening process was successful, the "0" is lit and the breaker symbol rotates vertical.
- Unsuccessful: If the breaker cannot be opened, the breaker symbol remains horizontal and the "0" flashes.

Katolight Service - Master Repair Manual - Page 1779

Navigation



Softkeys "Navigation"



For navigation between the main screens the softkeys displayed in the right section are used. The softkeys are assigned with different functions.



Alarm list / read alarm memory

If alarms have occurred during operation this softkey appears. By pressing this softkey the alarm list is called up.



Leave current screen ("Escape" / "ESC")

By pressing this softkey you change from the current screen into the above level. If the Escape key is used to leave the configuration mode any changes made will not be stored.



Changing screen levels

These push buttons are used to switch between screen levels.



Activate configuration mode

To activate configuration mode this softkey is used to enter the configuration menu.



Navigation within the configuration



These push buttons scroll between parameters forward or backward, navigate the cursor position within a parameter, increase or decrease the current digit of the parameter or confirm the modifications.



Increase/decrease display contrast

In the menu "display contrast" these softkeys can be used to increase or decrease the contrast of the display. If the contrast was reduced so much that the display can no longer be seen, press the STOP push button for at least 5 seconds. The contrast will be reset to the standard value.

© Woodward

Katolight Service - Master Repair Manual - Page 1780

Chapter 3.
Functional Description

Overview

	Application Mode							
	{BM}		{1o}		{1oc}		{2oc}	
Operation Mode	MAN	AUTO	MAN	AUTO	MAN	AUTO	MAN	AUTO
Operate the engine								
• Start engine by ...								
... the push buttons (Softkeys)	YES	---	YES	---	YES	---	YES	---
... the discrete inputs	---	YES	---	YES	---	YES	---	YES
... the automatic (emergency power)	---	---	---	---	---	---	---	YES
... the CAN bus	---	YES	---	YES	---	YES	---	YES
• Stop engine by ...								
... the push buttons (STOP push button)	YES	YES	YES	YES	YES	YES	YES	YES
... the push buttons (Softkeys)	YES	---	YES	---	YES	---	YES	---
... the discrete inputs	---	YES	---	YES	---	YES	---	YES
... the automatic (emergency power)	---	---	---	---	---	---	---	YES
... the CAN bus	---	YES	---	YES	---	YES	---	YES
... an alarm	YES	YES	YES	YES	YES	YES	YES	YES
Operate GCB								
• close GCB								
... the push buttons (Softkeys)	---	---	---	---	YES	---	YES	---
... the discrete inputs	---	---	---	---	---	YES	---	YES
... the automatic (emergency power)	---	---	---	---	---	---	---	YES
... the CAN bus	---	---	---	---	---	YES	---	YES
... an alarm (e.g. MCB failure)	---	---	---	---	---	---	---	YES
• open GCB								
... the push buttons (STOP push button)	YES	YES	YES	YES	YES	YES	YES	YES
... the push buttons (Softkeys)	---	---	YES	---	YES	---	YES	---
... the discrete inputs	---	---	---	YES	---	YES	---	YES
... the automatic (emergency power)	---	---	---	---	---	---	---	YES
... the CAN bus	---	---	---	YES	---	YES	---	YES
... an alarm	---	---	YES	YES	YES	YES	YES	YES
Operate MCB								
• open MCB								
... the push buttons (Softkeys)	---	---	---	---	---	---	YES	---
... the discrete inputs	---	---	---	---	---	---	---	YES
... the automatic (emergency power)	---	---	---	---	---	---	---	YES
... the CAN bus	---	---	---	---	---	---	---	YES
... an alarm	---	---	---	---	---	---	YES	YES
• close MCB								
... the push buttons (Softkeys)	---	---	---	---	---	---	YES	---
... the discrete inputs	---	---	---	---	---	---	---	YES
... the automatic (emergency power)	---	---	---	---	---	---	---	YES
... the CAN bus	---	---	---	---	---	---	---	YES
... an alarm	---	---	---	---	---	---	---	YES

Table 3-1: Functional description - Overview

- **Application Mode** (page 22): depends on the application; defines the number/function of the breakers ({BM}, {1o}, {1oc}, {2oc}).
- **Operating Mode** (page 23): depends on the application; separates between STOP, MANUAL and AUTOMATIC.

Katolight Service - Master Repair Manual - Page 1781

Application modes

The application mode can be changed only during configuration with the correct passwords. The most important features of the four application modes are illustrated in the following chapters. The exact description of the functions that are possible during each application mode can be found in the configuration manual (manual 37204). Table 3-1: Functional description - Overview describes which function is available in each application mode.

Application mode {BM} - Basic Mode

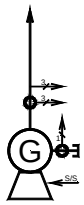

This application mode provides the following functions:

- the operation of the engine (start/stop) and/or
- the measuring and display of values.

Application mode {1o} – 0 CB mode

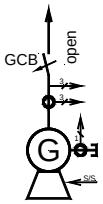

Additionally to the application mode {BM} the following functions are possible:

- monitoring of selected values and protection of the generator and the engine as well as
- opening the GCB.

Application mode {1oc} – 1 CB mode

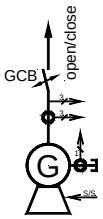

Additionally to the application mode {1o} the following functions are possible:

- closing the GCB and
- deadbus test logic.

Application mode {2oc} – 2 CB mode

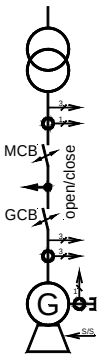

Additionally to the application mode {1oc} the following functions are possible:

- operating the MCB (open/close) and
- emergency power (AMF automatic mains failure) operation.

© Woodward

Katolight Service - Master Repair Manual - Page 1782

Operating modes

Operating mode STOP

NOTE

Selecting the operating mode STOP is not the same as an EMERGENCY STOP. In some cases the easYgen will perform additional logic before the engine is stopped. An EMERGENCY STOP discrete input can and should be programmed as a class F alarm.



In the operating mode STOP neither the engine nor any switch can be operated. Dependent on the application mode the engine and the power circuit breakers can not be operated. If the operating mode STOP has been selected while

the engine was already stopped

- the GCB will not be closed.
- The fuel solid relay will not be closed.
- The discrete inputs and CAN bus commands are ignored.
- The push buttons (softkeys) are disabled (depending on the previous operating mode).
- The engine/generator monitoring remains de-activated (exception: all monitoring that is not delayed by the delayed engine speed monitoring).

the engine was running

- The GCB is opened.
  Requirements:
  - The easYgen is at least in application mode {1o} and
  - the GCB is closed.
- The MCB will be closed.
  Requirements:
  - The easYgen is at least in application mode {2oc},
  - the GCB is open,
  - the MCB is enabled and
  - the parameter "close MCB in STOP modus" is configured to YES.
- An engine cooldown will be proceeded.
- The fuel solid relay will be opened.
- The engine/generator monitoring will be de-activated (exception: all monitoring that is not delayed by the delayed engine speed monitoring).
- The screen follows the operating conditions.

Katolight Service - Master Repair Manual - Page 1783

Operating mode MANUAL



In the operating mode MANUAL (softkey "MAN") the engine and the power circuit breakers are operated via the push buttons in the display (softkeys). All elements that can be operated via the softkeys have a black edge (). All other elements cannot be operated. The single line diagram in the lowest line will change according to the application mode.

The single line diagrams are displayed as follows:



Single line diagram for application mode {BM}.
When operating mode MANUALU is selected a black outline softkey will appear around the engine to indicate that the push buttons below this softkey can be used to start and stop the engine. This is shown below as well highlighted in red for the following functions.

- Start the engine or
- stop the engine.

Examples for the single line diagrams

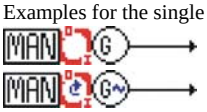



Single line diagram for application mode {1o}.
For a {1o} application both the engine and the GCB softkeys appear with the following functions.

- Start the engine,
- stop the engine or
- open the GCB.

Examples for the single line diagrams

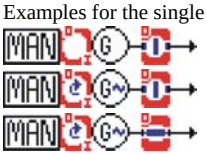



Single line diagram for application mode {1oc}.
For a {1oc} application both the engine and the GCB softkeys appear with the following functions.

- Start the engine,
- stop the engine,
- open the GCB or
- close the GCB.

Examples for the single line diagrams

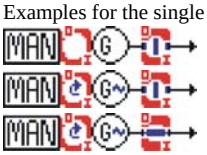



Single line diagram for application mode {2oc}.
For a {2oc} application both the engine, the GCB and the MCB softkeys appear with the following functions.

- Start the engine,
- stop the engine,
- open the GCB,
- close the GCB,
- open the MCB or
- close the MCB.

Examples for the single line diagrams

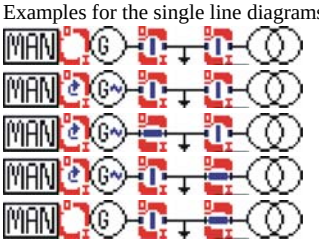

© Woodward

Katolight Service - Master Repair Manual - Page 1784

Operating mode AUTOMATIC



In the operating mode AUTOMATIC, all engine, GCB and/or MCB are operated either via the discrete inputs, via the CAN bus or automatically (e.g. in case of a mains failure). The function of the easYgen depends on the configuration of the unit and how the external signals are used. The start start /stop sequence of the engine is described in more detail in manual 37204.

In the following the main functions are briefly described.

START ENGINE

Remote start
The engine is started via a remote start signal.

A discrete input start requires.

- The operating mode is set to AUTOMATIC.
- The function "start in AUTO" is assigned via the *LogicsManager* to a discrete input and the conditions are fulfilled (TRUE).
- This discrete input is set (logically HIGH signal).
- No alarms of alarm class C or higher are present (for explanation of the alarm classes please note the manual 37204).
- The engine is ready for operation.
- The GCB (application mode {1o} and higher) is open.

A CAN bus start requires.

- The operating mode is set to AUTOMATIC.
- The necessary CAN bus command of the interface protocol is set (for explanation of the interface protocol please note manual 37204).
- No alarms of the alarm class C or higher are present (for explanation of the alarm classes please note manual 37204).
- The engine is ready for operation.
- The GCB (application mode {1o} and higher) is open.

Katolight Service - Master Repair Manual - Page 1785

Mains fault

AMF / Auto mains failure operation (only in application mode {2oc})
If the operating mode set to AUTOMATIC and the application mode is configured to {2oc} (2-breaker logic) and the mains fails, the engine and the power circuit breakers will be operated according to the conditions in the following table.

An AMF start requires.

- The operating mode is set to AUTOMATIC.
- The application mode is set to {2oc}.
- The parameter "Emergency power" is configured to ON.
- The configured mains failure limits are reached.
- The configured delay times are expired.
- No alarms of alarm class C or higher are present (for explanation please note manual 37204).
- The engine is ready for operation.

Status (prior to mains failure)			**Action** (order)		
Engine	**GCB**	**MCB**	**Engine**	**GCB**	**MCB**
0 (stands still)	**0** (open)	**0** (open)	**1** (start)	**2** (close)	---
	0 (open)	**1** (closed)	**1** (start)	**3** (close)	**2** (open)
1 (runs)	**0** (open)	**0** (open)	---	**1** (close)	---
	0 (open)	**1** (closed)	---	**2** (close)	**1** (open)
	1 (closed)	**0** (open)	---	---	---

Table 3-2: Functional description - AMF conditions

© Woodward

Katolight Service - Master Repair Manual - Page 1786

Chapter 4.
Configuration

This chapter provides information "how to configure the unit via the LC display" as well as the description of all parameters that can be changed without password. If you have the right codes to configure the unit (this is verified via passwords) please note manual 37204 for detailed information. Manual 37204 describes all parameters, their setting range and their influence to the operation of the unit.

Structure of the parameters

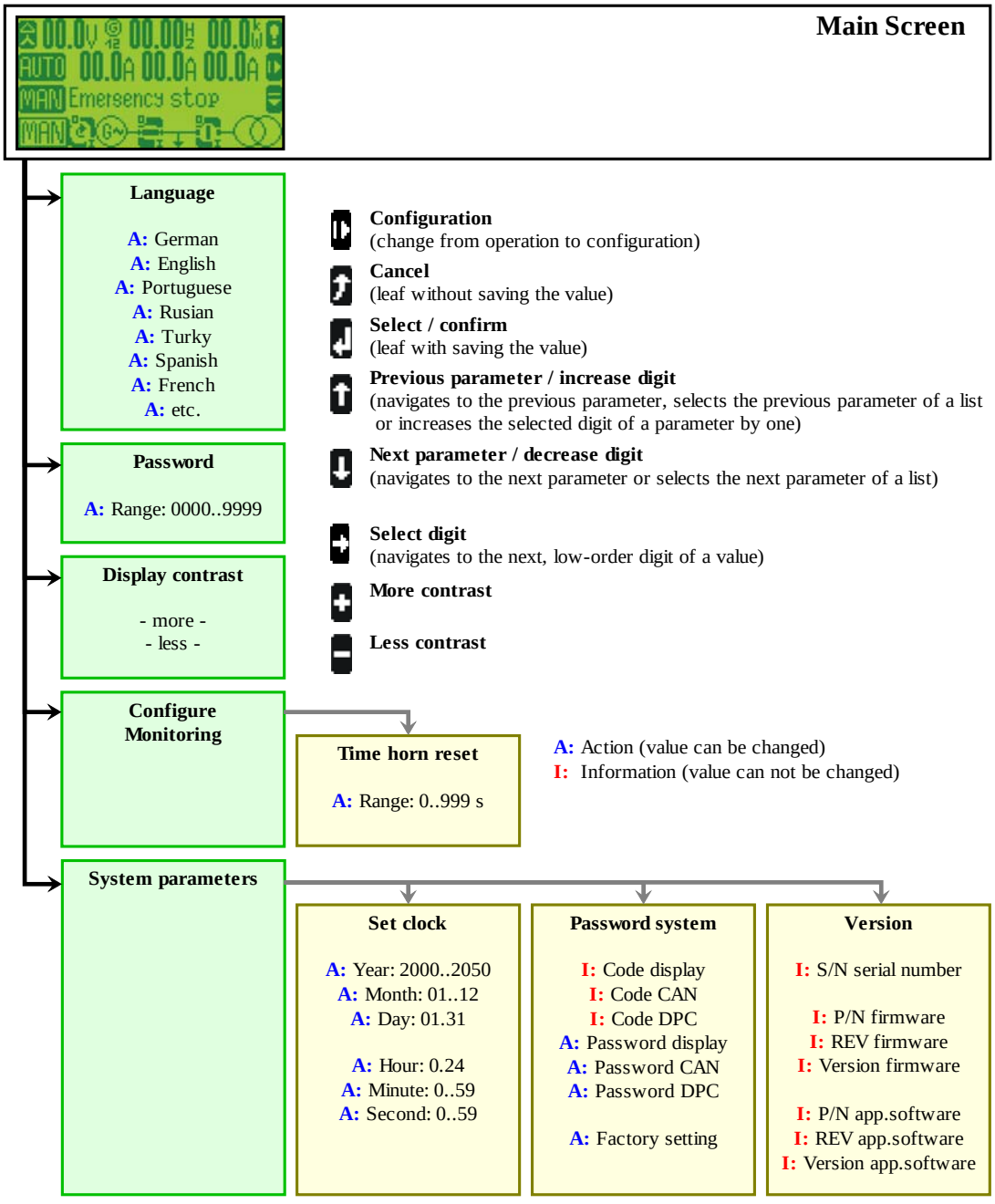

Figure 4-1: Configuration screens (overview)

Katolight Service - Master Repair Manual - Page 1787

Change into configuration



To change into configuration please press in the main screen. Afterwards the list with all parameters gets visible.

Softkeys "Configuration - select parameter"



Navigation through the parameters is carried out using the softkeys and . To edit the selected parameter press . To save the edited parameter press . To cancel without saving the changes press .

Jump into the display modus (start screen); escape without saving the changes ("Escape")

Navigate ..... Pressing this softkey changes into the screen with measuring values and messages. If you are within a deep level of the configuration menu this softkey navigates you back one level.

Edit ..... If you wish to cancel WITHOUT saving a parameter that has been changed using or press this softkey. This softkey also changes from editing to navigation.

Next parameter; increase value

Navigate ..... This softkey navigates to the next parameter (downwards). You only can see/edit that parameters you have access to (verified via passwords). Parameters that require a higher password level are not possible to select. The description of the parameters where no password is required are decribed within this manual further below.

Edit ..... If you have selected the parameter via and the position you want to change via or , the value of this digit is reduced via step by step.

Previous parameter, reduce digit

Navigate ..... These push buttons navigate within the parameter list forwards / backwards.

Edit ..... If you have selected the parameter via and the position you want to change via or , the value of this digit is raised step by step.

© Woodward

Katolight Service - Master Repair Manual - Page 1788

Select parameter, input confirmation ("Enter")

Navigate.....Just as you press this softkey, the highlighted parameter which you have selected before, is for changing written into the lowest line of the screen. There it can be changed accordingly.
Edit.....If you have changed a value, it will be accepted by this button.

Next digit of the selected parameter

If the digits of a parameter can be changed singly (e.g. the password) this softkey is active and the navigation between the digits in direction of the low-order digits / to the right is possible (the selected digit can be changed by oder or saved by).

Previous digit of the selected parameter

Identical equal to but the navigation in direction of the high-order digit / to the left.

Parameters

NOTE

The description of the configuration and of all parameters which can be edited via the display are described in manual 37204.

Language

EN	Language
DE	Language
PT	Language
RU	Language
TU	Language
SP	Language
FR	Language

Change language **{Language}**

{Language}..All texts are monitored in the selected language. This concerns the following texts:

- Texts in operating mode which are not lodged by definition of an input (so e.g. discrete inputs can be lodged with a name),
- Texts of the event logging,
- Parameter which can be changed over the display.

Password

EN	Password
DE	Passwort
PT	Senha
RU	Пароль
TU	Şifre
SP	Consigna
FR	Code d'accès

Password for access via the LCD **0000..9999**

Enter the password for the configuration for this type of access. If you do not enter a password only the displayed parameters can be edited. All other parameters and their desciption can be found in the manual 37204.

Katolight Service - Master Repair Manual - Page 1789

Display contrast

EN	Change display contrast
DE	Displaykontrast ändern
PT	Contraste da tela
RU	Изменение контраста дисплея
TU	Kontrastı değiştir
SP	Cambiar contraste pantalla
FR	Config. contraste affichage

Change display contrast + / -

In menu "display contrast" you increase or reduce the display contrast with these softkeys.

+ ..... Increase the display contrast.
- ..... Reduce the display contrast.
STOP ..... If you have changed the display contrast until you cannot see anything on the display, press the STOP button for at least 5 seconds. Then the contrast will be reset onto the standard value.

Acknowledgement of centralized alarm

EN	Time until horn reset
DE	Zeit Hupenreset
PT	Tempo de sirene ativa
RU	Время откл. сирены
TU	Kornayı kes zamansüresi
SP	Tiempo sirena
FR	Durée alarme sonore avant reset

Self acknowledgement of the centralized alarm **0..1.000 s**

After a new alarm has occured the alarm LED flashes and the centralized alarm is issued. After this time has run off the flashing LED changes into a steady light andthe centralized alarm is reset.

Real-time clock - time

EN	Hour
DE	Stunden
PT	Horas
RU	Часы
TU	saat
SP	Horas
FR	Heure

Adjust clock time: hour **0..23**

The current hour of the clock time is set here. Example:
0 ..... 0th hour of the day.
23 ..... 23rd hour of the day.

EN	Minute
DE	Muniten
PT	Minutos
RU	Минуты
TU	dakika
SP	Minutos
FR	Minute

Adjust clock time: minute **0..59**

The current minute of the clock time is set here. Example:
0 ..... 0th minute of the hour.
59 ..... 59th minute of the hour.

EN	Second
DE	Sekunden
PT	Segundos
RU	Секунды
TU	saniye
SP	Segundos
FR	Seconde

Adjust clock time: second **0..59**

The current second of the clock time is set here. Example:
0 ..... 0th second of the minute.
59 ..... 59th second of the minute.

© Woodward

Katolight Service - Master Repair Manual - Page 1790

Real-time clock - date

EN	Day
DE	Tag
PT	Dia
RU	День
TU	gün
SP	Día
FR	Jour

Adjust date: day **1..31**

The current day of the date is set here. Example:
1.....1st day of the month.
31.....31st day of the month.

EN	Month
DE	Monat
PT	Mês
RU	Месяц
TU	ay
SP	Mes
FR	Mois

Adjust date: month **1..12**

The current month of the date is set here. Example:
1.....1st month of the year.
12.....12th month of the year.

EN	Year
DE	Jahr
PT	Ano
RU	Год
TU	yıl
SP	Año
FR	Année

Adjust date: year **0..99**

The current year of the date is set here. Example:
0.....Year 2000.
99.....Year 2099.

Code levels

EN	Code level display
DE	Codeebene Display
PT	Nível senha display
RU	Код. уровень дисплей
TU	Kodseviye Ekran
SP	Nivel consigna pantalla
FR	Niv. code affichage

Code level via LCD **Info**

This value displays the code level which is currently selected for the access via the LCD.

EN	Code level CAN port
DE	Codeebene CAN Schnittstel.
PT	Nível senha CAN
RU	Код.уровень CAN интерфейс
TU	Kodseviye CAN ara birim
SP	Nivel consigna interfaz CAN
FR	Niv. code interfaceCAN

Code level via CAN-Bus **Info**

This value displays the code level which is currently selected for the access via the CAN bus.

EN	Code level serial
DE	Codebene serielle Schnittstel
PT	Nível senha RS232
RU	Код.уров.послед. интерфейс
TU	Kodseviye seriel ara birim
SP	Niv.consigna interf. RS232/DPC
FR	Niv. code interface serielle

Code level via serial RS232 (DPC) interface **Info**

This value displays the code level which is currently selected for the access via the serial RS232 (DPC) interface.

Katolight Service - Master Repair Manual - Page 1791

Password

EN	Password
DE	Passwort
PT	Senha
RU	Пароль
TU	Şifre
SP	Consigna
FR	Code d'accès

Password for access via the LCD **0000..9999**

Enter the password for the configuration for this type of access. If you do not enter a password only the displayed parameters can be edited. All other parameters and their desciption can be found in the manual 37204.

EN	Password CAN
DE	Passwort CAN
PT	Senha CAN
RU	Пароль CAN
TU	Şifre CAN
SP	Consigna CAN
FR	Code d'accès CAN

Password for access via the CAN **0000..9999**

Enter the password for the configuration for this type of access. If you do not enter a password only the displayed parameters can be edited. All other parameters and their desciption can be found in the manual 37204.

EN	Password RS232
DE	Passwort RS232
PT	Senha RS232
RU	Пароль RS232
TU	Şifre RS232
SP	Consigna RS232/DPC
FR	Code d'accès RS232

Password for access via the DPC **0000..9999**

Enter the password for the configuration for this type of access. If you do not enter a password only the displayed parameters can be edited. All other parameters and their desciption can be found in the manual 37204.

Factory (default) values

EN	Factory settings
DE	Werkseinstellung
PT	Configuração deusina
RU	Завод. параметры
TU	Fabrika değerler
SP	Configuración de fábrica
FR	Parametres d'usine

Factory setting **YES/NO**

The factory settings (default values) can be loaded. Select YES to enable the following screen to be displayed. It is possible to load the factory settings (default values) for all displayed parameters.

EN	Set default values
DE	Standardwerte
PT	Valores padrão
RU	Стандарт. параметры
TU	Standart değerler
SP	Valores por defectro
FR	Valeurs standards

Set default values **YES/NO**

Entering YES overwrites the currently configured values with the default values.

© Woodward

Katolight Service - Master Repair Manual - Page 1792

Appendix A.
Messages

Status messages

Message in the display	Meaning
Aux.serv.prerun	**Prerun of the auxiliary operation is active** Before the engine is started the signal "aux. services prerun" is set, so that all necessary facilities which are necessary for the operation of the engine can be initialized, started or switched.
Preglow	**Preglow the engine is active** {Diesel engine} The diesel engine is preheated before starting.
Turning	**Purging operation is active** {Gas engine} Before the gas valve opens and the ignition of the gas engine is switched, the remaining gas which could be still in the engine, will be removed by a purging operation. Thereto the engine is turned without ignition by the starter for a specified time. After the purging process the gas valve is opened and the ignition is switched.
Ignition	**Switch on the ignition** {Gas engine} After the purging operation and before the gas valve is opened and before starting the ignition is switched on.
Start	**Start engine is active** After the expiration "Prerun auxiliary operation" the engine is started according to the configured start sequence (Diesel or gas engine). Thereto different relays are set, resp. signals are passed via the CAN bus to a secondary engine control.
Start - Pause	**Start pause while starting the engine is active** The engine could not be started. Before the next start attempt this pause is active.
Crank protect	**Starter protection** To prevent that the starter is destroyed by a turning engine, this time is awaited before a new start, so that the engine can come into idleness.
Cool down	**Coasting of the engine is active** The no load operation of the engine before its stopping is active. Additional the remaining time in no load operation is monitored. The no load operation is used for cooling of the engine.
Aux. services	**Coasting of the auxiliary operation is active** Before the finally stop of the engine the signal "Coasting auxiliary operation" is further sustained, so that all necessary facilities which are necessary for operation of the engine, keep running, e.g.to cool the engine.
Stop engine	**Engine has been stopped.** The engine has been stopped, i.e. that neither speed nor generator frequency is measured/detected. This message is monitored as finalization of the stop process.

Katolight Service - Master Repair Manual - Page 1793

Message in the display	Meaning
GCB dead bus cls	**Black start of the GCB** {1oc}, {2oc} The GCB is switched to the de energized busbar. This is released either by absence of the MCB (operation mode {1oc}) or by "Reply: MCB is open". Please attend: If the busbar is actually de-energized, cannot be ascertained. Therefore take guarantee during the commissioning that no other participant can feed into the same busbar.
MCB dead bus cls	**Black start of the MCB** {2oc} The MCB is switched to the de energized busbar. This is released by the "Reply: GCB is open". Please notice Please attend: If the busbar is actually de-energized, cannot be ascertained. Therefore take guarantee during commissioning that no other participant can feed into the same busbar.
Emergency run	**Emergency power operation** {2oc} After recognizing a mains fault and after the expiry of the emergency delay time the engine is either started (or at least not stopped). After that the GCB is opened and the MCB is closed. The supply of the load occurs over the generator.
Mains settling	**Mains settling time is active** {2oc} After a mains fault and after its return the genset remains for a defined time in isolated operation, i.e. for the time the mains settling time is running. If the mains is stable after the expiration of this time (the mains voltage is during this time not fallen below or risen over the adjusted monitoring limits), after the expiration of the mains settling time the change from generator supply to mains supply occurs.
Critical mode	**Critical mode (Sprinkler operation) is active** The sprinkler operation is activated. The exact description of the conditions and effects of the sprinkler operation are described in manual 37204.

Alarm messages

Message in the display	Meaning
Overvoltage lev.1	**Generator overvoltage, limit value 1** The generator voltage has exceeded the limit value 1 for generator overvoltage for at least the indicated time and did not yet fall below the value of the hysteresis. Furthermore the alarm was not acknowledged (unless the "Self acknowledgement" is not set NO).
Overvoltage lev.2	**Generator overvoltage, limit value 2** The generator voltage has exceeded the limit value 2 for generator overvoltage for at least the indicated time and did not yet fall below the value of the hysteresis. Furthermore the alarm was not acknowledged (unless the "Self acknowledgement" is not set NO).
Undervoltage lev.1	**Generator undervoltage, limit value 1** The generator voltage has fallen below the limit value 1 for generator undervoltage for at least the indicated time and has not exceeded the value of the hysteresis. Furthermore the alarm was not acknowledged (unless the "Self acknowledgement" is not set NO).
Undervoltage lev.2	**Generator undervoltage, limit value 2** The generator voltage has fallen below the limit value 2 for generator undervoltage for at least the indicated time and has not exceeded the value of the hysteresis. Furthermore the alarm was not acknowledged (unless the "Self acknowledgement" is not set NO).
Overfrequency lev.1	**Generator overfrequency, limit value 1** The generator voltage has exceeded the limit value 1 for generator overfrequency for at least the indicated time and did not fall below the value of the hysteresis. Furthermore the alarm was not acknowledged (unless the "Self acknowledgement" is not set NO).
Overfrequency lev.2	**Generator overfrequency, limit value 2** The generator voltage has exceeded the limit value 2 for generator overfrequency for at least the indicated time and did not fall below the value of the hysteresis. Furthermore the alarm was not acknowledged (unless the "Self acknowledgement" is not set NO).

© Woodward

Katolight Service - Master Repair Manual - Page 1794

Message in the display	Meaning
Underfrequency lev.1	**Generator underfrequency, limit value 1** The generator voltage has fallen below the limit value 1 for generator underfrequency for at least the indicated time and has not exceeded the value of the hysteresis. Furthermore the alarm was not acknowledged (unless the "Self acknowledgement" is not set NO).
Underfrequency lev.2	**Generator underfrequency, limit value 2** The generator voltage has fallen below the limit value 2 for generator underfrequency for at least the indicated time and has not exceeded the value of the hysteresis. Furthermore the alarm was not acknowledged (unless the "Self acknowledgement" is not set NO).
Overspeed lev.1	**Engine overspeed, limit value 1** The engine speed (measured over pickup) has exceeded the limit value 1 for engine overspeed for at least the indicated time and did not fall below the value of the hysteresis. Furthermore the alarm was not acknowledged (unless the "Self acknowledgement" is not set NO).
Overspeed lev.2	**Engine overspeed, limit value 2** The engine speed (measured over pickup) has exceeded the limit value 2 for engine overspeed for at least the indicated time and did not fall below the value of the hysteresis. Furthermore the alarm was not acknowledged (unless the "Self acknowledgement" is not set NO).
Underspeed lev.1	**Engine underspeed, limit value 1** The engine speed (measured over pickup) has fallen below the limit value 1 for engine underspeed and has not exceeded the value of the hysteresis. Furthermore the alarm was not acknowledged (unless the "Self acknowledgement" is not set NO).
Underspeed lev.2	**Engine underspeed, limit value 2** The engine speed (measured over pickup) has fallen below the limit value 2 for engine underspeed and has not exceeded the value of the hysteresis. Furthermore the alarm was not acknowledged (unless the "Self acknowledgement" is not set NO).
Overload lev.1	**Generator overload, limit value 1** The generator power has exceeded the limit value 1 for generator overload for at least the indicated time and did not fall below the value of the hysteresis. Furthermore the alarm was not acknowledged (unless the "Self acknowledgement" is not set NO).
Overload lev.2	**Generator overload, limit value 1** The generator power has exceeded the limit value 1 for generator overload for at least the indicated time and did not fall below the value of the hysteresis. Furthermore the alarm was not acknowledged (unless the "Self acknowledgement" is not set NO).
Rev./red. power lev.1	**Generator reverse power, limit value 1** resp. **Generator reduced power, limit value 1** The generator power has exceeded the limit value 1 for generator reverse power resp. generator reduced power for at least the indicated time and did not fall below the value of the hysteresis. Furthermore the alarm was not acknowledged (unless the "Self acknowledgement" is not set NO).
Rev./red. power lev.2	**Generator reverse power, limit value 2** resp. **Generator reduced power, limit value 2** The generator power has exceeded the limit value 2 for generator reverse power resp. generator reduced power for at least the indicated time and did not fall below the value of the hysteresis. Furthermore the alarm was not acknowledged (unless the "Self acknowledgement" is not set NO).
Unbalanced load lev.1	**Generator load imbalance, limit 1** The generator power has exceeded the limit value 1 for generator load imbalance (generator imbalance current) for at least the indicated time and did not fall below the value of the hysteresis. Furthermore the alarm was not acknowledged (unless the "Self acknowledgement" is not set NO).
Unbalanced load lev.2	**Generator load imbalance, limit value 2** The generator power has exceeded the limit value 2 for generator load imbalance (generator imbalance current) for at least the indicated time and did not fall below the value of the hysteresis. Furthermore the alarm was not acknowledged (unless the "Self acknowledgement" is not set NO).

Katolight Service - Master Repair Manual - Page 1795

Message in the display	Meaning
Overcurrent lev.1	**Generator overcurrent, limit value 1** The generator current has exceeded the limit value 1 for the generator overcurrent for at least the indicated time and did not fall below the value of the hysteresis. Furthermore the alarm was not acknowledged (unless the "Self acknowledgement" is not set NO).
Overcurrent lev.2	**Generator overcurrent, limit value 2** The generator current has exceeded the limit value 2 for the generator overcurrent for at least the indicated time and did not fall below the value of the hysteresis. Furthermore the alarm was not acknowledged (unless the "Self acknowledgement" is not set NO).
Overcurrent lev.3	**Generator overcurrent, limit value 3** The generator current has exceeded the limit value 3 for the generator overcurrent for at least the indicated time and did not fall below the value of the hysteresis. Furthermore the alarm was not acknowledged (unless the "Self acknowledgement" is not set NO).
Undervoltage lev.1	**Battery undervoltage, limit value 1** The battery voltage has fallen below the limit value 1 for battery undervoltage for at least the indicated time and did not exceed the value of the hysteresis. Furthermore the alarm was not acknowledged (unless the "Self acknowledgement" is not set NO).
Undervoltage lev.2	**Battery undervoltage, limit value 2** The battery voltage has fallen below the limit value 2 for battery undervoltage for at least the indicated time and did not exceed the value of the hysteresis. Furthermore the alarm was not acknowledged (unless the "Self acknowledgement" is not set NO).
Overvoltage lev.1	**Battery overvoltage, limit value 1** The battery voltage has exceeded the limit value 1 for battery overvoltage for at least the indicated time and did not fall below the value of the hysteresis. has fallen. Furthermore the alarm was not acknowledged (unless the "Self acknowledgement" is not set NO).
Overvoltage lev.2	**Battery overvoltage, limit value 2** The battery voltage has exceeded the limit value 2 for battery overvoltage for at least the indicated time and did not fall below the value of the hysteresis. has fallen. Furthermore the alarm was not acknowledged (unless the "Self acknowledgement" is not set NO).
Lv1:	**Analog input {x}, limit value 1** The analog input has exceeded resp. fallen below the limit value 1 for exceeding resp.negative deviation (depending on the configuration) for at least the indicated time and did not fall below resp. exceed the value of the hysteresis. Furthermore the alarm was not acknowledged (unless the "Self acknowledgement" is not set NO).
Lv2:	**Analog input {x}, limit value 2** The analog input has exceeded resp. fallen below the limit value 2 for exceeding resp.negative deviation (depending on the configuration) for at least the indicated time and did not fall below resp. exceed the value of the hysteresis. Furthermore the alarm was not acknowledged (unless the "Self acknowledgement" is not set NO).
Wb:	**Analog input {x}, wire break** During measurement of the analog input a wire break was detected. This alarm is current at least for the indicated time and the value of the hysteresis is not exceeded/fallen below. Furthermore the alarm was not acknowledged (unless the "Self acknowledgement" is not set NO).

© Woodward

Katolight Service - Master Repair Manual - Page 1796

Message in the display	Meaning
Speed detection	**Plausibility alarm frequency/speed measurement** The value of the generator frequency (ascertained by the generator voltage measurement) has differed for at least the indicated time for more than 10 Hz of the engine speed (measured over pickup) and has not fallen below the value of the hysteresis. Furthermore the alarm was not acknowledged (unless the "Self acknowledgement" is not set NO).
Comm. Interface	**Interface alarm** The communication via interface is disturbed and no dates can be received or sent over the bus. Furthermore the alarm was not acknowledged (unless the "Self acknowledgement" is not set NO).
Start failure	**Start alarm of the engine** Three unsuccessful attempts were carried out to start the engine. No more start attempt will be carried out. In Sprinkler operation six start attempts are carried out before this message is monitored.
Shutdown malfunction	**Stop alarm of the engine** It was unsuccessful to stop the engine. 30 seconds after the stop signal still speed was indicated (measured by the generator frequency, the pickup or the discrete input "Dynamo").

Katolight Service - Master Repair Manual - Page 1797

We appreciate your comments about the content of our publications.

Please send comments to: icinfo@woodward.com

Please include the manual number from the front cover of this publication.

Woodward Governor Company
Leonhard-Reglerbau GmbH
Handwerkstrasse 29 - 70565 Stuttgart - Germany
Phone +49 (711) 789 54-0 • Fax +49 (711) 789 54-100
sales-stuttgart@woodward.com

Homepage

http://www.woodward.com/smart-power

Woodward has company-owned plants, subsidiaries, and branches, as well as authorized distributors and other authorized service and sales facilities throughout the world.

Complete address/phone/fax/e-mail information for all locations is available on our website (www.woodward.com).

04/2/S

Service Bulletin KASSEC 1.5

KATOLIGHT CORPORATION

HIGHLIGHTS

- By taking advantage of new manufacturing process, Katolight is able to offer improvements in the Katolight Automatic Solid State Engine Control.
- Nicknamed Kassec 1.5, the engine control is physically and electrically interchangeable with its predecessor.
- The Kassec 1.5 offers the ability to utilize different crank disconnect simultaneously.
- Although factory adjusted and tested, the Kassec 1.5 potentiometers are shown in the diagram below.

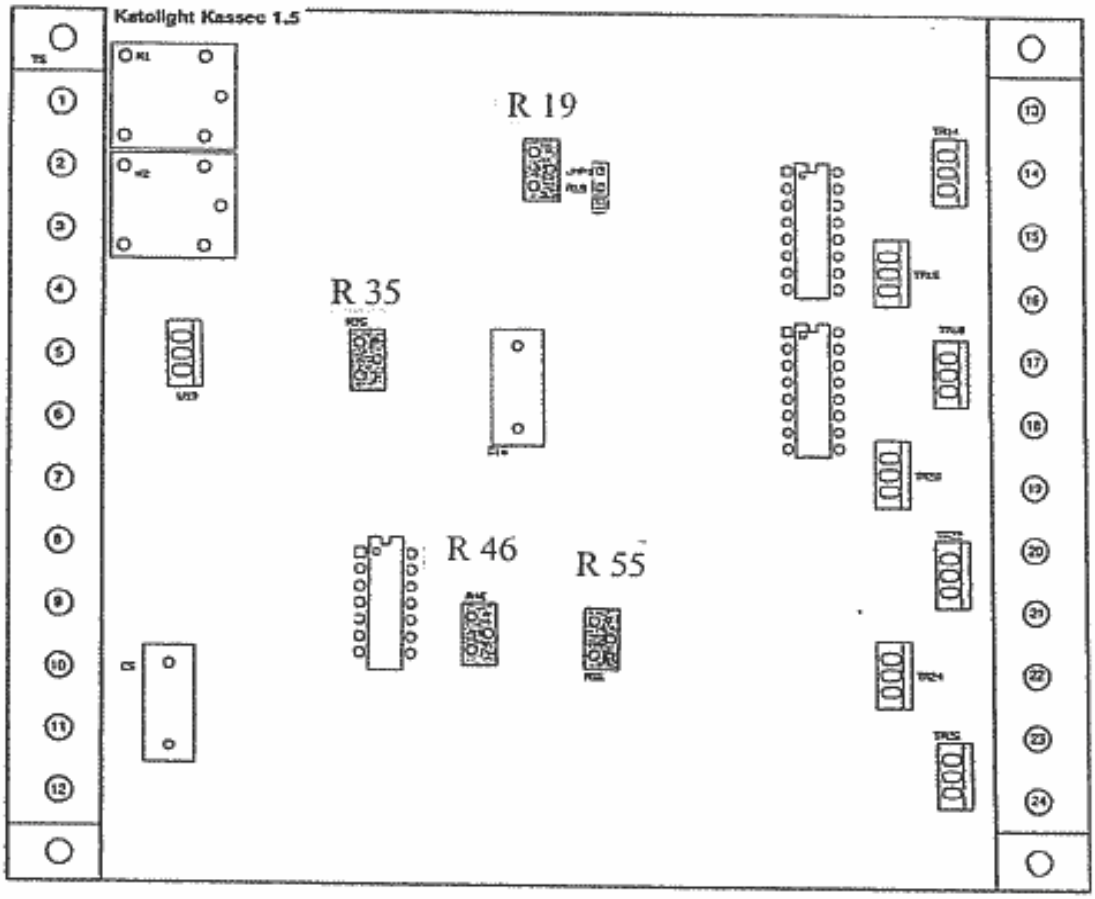

- R46 Mag Pickup Crank Disconnect: Clockwise increases disconnect frequency.
- R35 Engine Alternator Clockwise increases disconnect frequency.
- R55 Oil Failure Time Set Counter clockwise increases time before failure.
- R19 Crank Time Set Counter clockwise increases length of crank time.
- JMP1 1 TO 2 Yields one shot 2 TO 3 Yields 5 cycle

NOTE! ANY UNIT THAT IS STILL UNDER WARRANTY:
FACTORY AUTHORIZATION MUST BE OBTAINED FOR EACH INDIVIDUAL UNIT BY SERIAL NUMBER BEFORE ANY ADJUSTMENTS ARE MADE.

No. 126 January 1991

For support or information, call us at 800-325-5450 or visit us at www.katolight.com

Materials and specifications subject to change without notice.
© Katolight Corporation. 100 Power Drive, Mankato, MN 56001
KASSEC_1.5_Service_Bulletin_01-1991

Katolight Automatic Solid State Engine Control (KASSEC)

HIGHLIGHTS



- Compatible with virtually all engines in today's marketplace
- Reliable Katolight solid-state design
- External alarm circuit for remote failure indication. Source 2 Amp Resistive
- Ease of installation, simple mounting bracket

DESCRIPTION

Katolight Automatic Solid State Engine Control (KASSEC) will automatically start and stop diesel, gasoline, natural gas and LPG engines or engine-generator sets under the control of an automatic transfer switch of load start contact closed to run. KASSEC is manufactured and tested to the highest quality control standards to ensure reliability.

SPECIFICATIONS

- Consistent operation from -30° C (-22° F) to +60° C (+140° F)
- Reliable Katolight solid-state design
- Accommodates requirements for NFPA-110 annunciator for hospital application
- Compatibility with virtually all engines in today's marketplace
- Barrier screw type terminals U.L. and C.S.A. listed, with approved means for solderless connection of conductors
- Adjustable seven (7) to fifty (50) second engine cranking circuit
- Adjustable one (1) or five (5) crank / rest cycles
- Adjustable seven (7) to fifty (50) second oil failure circuit
- External alarm circuit for remote failure indication. Source 2 Amp Resistive
- Available for 12 or 24 volt negative ground battery systems
- Four (4) crank disconnects are available. (Mag pickup, engine alternator, 110 VAC, and auxiliary 12V DC or 24V DC). The mag pickup and engine alternator crank disconnects are adjustable.
- Positive lockout circuits prohibit recranking while engine is running
- First failure shutdown lockout
- 8 amp relay contacts for start and ignition system
- Unit is sealed with a durable conformal coating

Katolight Automatic Solid State Engine Control (KASSEC)

INSTALLATION GUIDE

KASSEC will be in the “standby monitoring” mode whenever terminals #1 and #4 have battery voltage on them. In the “standby monitoring” mode, KASSEC will draw approximately 15 mA of current on the 12 volt model and approximately 17 mA of current on the 24 volt mode.

In the “standby monitoring” mode: when battery voltage is placed on Terminal #8 by the closing of a remote switch, relay or a transfer switch, the logic signal in KASSEC will operate the relays in KASSEC initiating cranking. Terminals #2 and #3 will have battery voltage on during the “cranking” period. During the “cranking rest” period, Terminals #2 and #3 will have zero voltage on them.

If the engine starts, one or more of the crank disconnect terminals #5, 6, 7 or 12 must have a signal placed on them. The KASSEC “start” relay will then open and Terminal #3 will go to zero volts. KASSEC is now in the “run” mode.

KASSEC has cyclic cranking which is adjustable. If the engine does not start in the first period of the cranking cycle, cranking will rest for the second period of the cranking cycle. These periods are equal. KASSEC will repeat cycle-cranking for an adjustable amount of cranks (1-5). If the engine has not started, KASSEC will go into an “overcrank failure” mode and both the Common Alarm Terminal #23 and the Overcrank Failure Terminal #13 will activate and battery voltage will be supplied from these terminals to be used for a failure light. Terminals #2 and #3 will go to zero volts. KASSEC is now locked in an “overcrank failure” mode resettable by turning the power to Terminal #4 off and on again.

When the engine starts, the Oil Failure circuit of KASSEC starts timing. If the Oil Failure Sender Terminal #24 does not activate (open from the ground) before the end of the timing period, KASSEC will go into the “low oil pressure failure” mode and shut the engine down. Terminals #2 and #3 will go to zero volts. The Common Alarm Terminal #23 and the Oil Failure Terminal #14 will activate and battery voltage will be supplied by these terminals to be used for a failure light. KASSEC is now locked in a “low oil pressure failure” mode resettable by turning the power to Terminal #4 off and on again. If Terminal #24 is grounded while KASSEC is in the “run” mode, KASSEC will go into the “low oil pressure failure” mode and shut the engine down. Terminals #2 and #3 will go to zero volts. The Common Alarm Terminal #23 and the Oil Failure Terminal #14 will activate and battery voltage will be supplied by these terminals to be used for a failure light. KASSEC is now locked in a “low oil pressure failure” mode resettable by turning the power to Terminal #4 off and on again.

If any of the Failure Sender Terminals (#18, 19, 21, or 22) go to ground while KASSEC is in a “cranking” or “run” mode, KASSEC will go into a “failure” mode and shut the engine down. Terminals #2 and #3 will go to zero volts. The Failure Lamp Terminal (#16, 20, 17, or 15) respectively coinciding with the Failure Sender will activate and battery voltage will be supplied by this terminal to be used for a failure light. The Common Alarm Terminal (#23) will activate and supply battery voltage. KASSEC is now locked in a “failure” mode resettable by turning the power to Terminal #4 off and on again.

NOTE: “battery voltage” or “supply voltage” will refer to the battery’s positive voltage. “Ground” will refer to the negative side of the battery.

Terminal #1 supplies battery voltage to the high current requirement sections of the circuit. Battery voltage is supplied by KASSEC to the six Failure Lamps (Terminals #13, 14, 15, 16, 17 and 20), the Common Alarm Terminal #23, the Start Terminal #3 and the “energized to run” terminal #2.

Terminal #2 is the “energized to run” terminal. Up to 8 amps is available from this terminal to supply an external engine “run” component such as an ignition coil or fuel solenoid.

Terminal #3 is the Starter Solenoid Terminal. Up to 8 amps is available from this terminal to supply a starter solenoid on the engine.

Terminal #4 supplies battery voltage to all the logic circuitry. Anytime Terminal #4 is brought from the ground to battery voltage, KASSEC will be reset. Note: Terminal #4 is the main reset terminal for KASSEC.

Terminal #5 is the Mag Pickup Crank Disconnect input. This is one of four crank disconnects on KASSEC. When KASSEC is in the “cranking” mode and the input frequency of the mag pickup equals a value set by the adjustable resistor on KASSEC, KASSEC will crank disconnect and go into the “run” mode. If the signal from the mag pickup is lost while KASSEC is in the “run” mode and this is the only crank disconnect being used, KASSEC will go into the “overcrank failure” mode and shut the engine down.

NOTE: Whenever Terminal #5 is not in use, it must be tied to Terminal #9, Ground, to prevent accidental triggering of the crank disconnect circuitry.

Terminal #6 is the Engine Alternator Crank Disconnect Terminal. This is one of four crank disconnects on KASSEC. When an A.C. signal from the stator terminal of the engine alternator is fed to this terminal and KASSEC is in the “cranking” mode, KASSEC will crank disconnect and go into the “run” mode. With KASSEC in the “run” mode, the unit will not shut down or go into overcrank with loss of the alternator Crank Disconnect.

Terminal #7 is the Auxiliary Crank Disconnect Terminal. This is one of four crank disconnects on KASSEC. When a positive voltage is placed on this terminal and KASSEC is in the “cranking” mode, KASSEC will go into a “run” mode and this is the only crank disconnect being used. Loss of the positive voltage on Terminal #7 will place KASSEC into an “overcrank failure” mode and shut the engine down.

Terminal #8 is the Transfer Switch Terminal. This terminal is the main controlling terminal. Anytime this terminal is at battery positive, the unit will be in active modes of trying to start, run, failure. If Terminals #1 and #4 have battery voltage on them and Terminal #8 has no battery voltage present, KASSEC is in a “standby” position. Whenever this terminal is brought to battery voltage, KASSEC will be in an “operate” mode. The only exception to this is when a shutdown failure has occurred. KASSEC can only be reset from a failure mode by bringing Terminal #4 from Ground to battery voltage.

Terminal #9 is the Ground Terminal for KASSEC. All the grounded points should be common to this terminal.

Terminal #10 is not connected.

Terminal #11 is not connected.

NOTE: Terminals #10 and #11 are left open for isolation between Ground and the 120 volts A.C. These terminals may be used as tie points if needed.

Terminal #12 is the 120 volt A.C. Crank Disconnect. This is one of four crank disconnects on KASSEC. When KASSEC is in the “cranking mode” and a 120 volt A.C. 60 Hz. Signal is fed to this terminal, KASSEC will crank disconnect and go into a “run” mode. With KASSEC in the “run” mode, the unit will not shut down or go into “overcrank” mode with loss of the 120 Volt Crank Disconnect.

Terminal #13 is the Overcrank Failure Indicator Terminal. When an overcrank failure occurs, the unit has cranked for a preset number of times and failed to start or the loss of the overcrank signal (mag pickup or auxiliary crank disconnect) has occurred. The maximum “on state” load current that Terminal #13 can supply is two (2) amps resistive.

Terminal #14 is the Oil Failure Indicator Terminal. If Terminal #24 is brought to ground after the oil timer on KASSEC times out, Terminal #14 will supply battery voltage indicating an oil failure. The maximum “on state” load current that Terminal #14 can supply is two (2) amps resistive.

Terminal #15 is a failure indicator output terminal. If Terminal #22 is brought to ground, Terminal #15 will supply battery voltage for a failure lamp. The maximum “on state” load current that Terminal #15 can supply is two (2) amps resistive.

Terminal #16 is a failure indicator output terminal. If Terminal #18 is brought to ground, Terminal #16 will supply battery voltage for a failure lamp. The maximum “on state” load current that Terminal #16 can supply is two (2) amps resistive.

Terminal #17 is a failure indicator output terminal. If Terminal #21 is brought to ground, Terminal #17 will supply battery voltage for a failure lamp. The maximum “on state” load current that Terminal #17 can supply is two (2) amps resistive.

Terminal #18 is a failure sender input terminal. If this terminal is brought to ground, Terminal #16 will indicate a failure and the engine will shut down.

Terminal #19 is a failure sender input terminal. If this terminal is brought to ground, Terminal #20 will indicate a failure and the engine will shut down supplying battery voltage. This terminal will also supply battery voltage if the number of recranks has been satisfied or if a crank disconnect (mag pickup or auxiliary crank disconnect) has been lost. The maximum “on state” load current that Terminal #23 can supply is two (2) amps resistive.

Terminal #20 is a failure indicator output terminal. If Terminal #19 is brought to ground, Terminal #20 will supply battery voltage for a failure lamp. The maximum “on state” load current that Terminal #20 can supply is two (2) amps resistive.

Terminal #21 is the failure sender input terminal. If this terminal is brought to ground, Terminal #17 will indicate a failure and the engine will shut down.

Terminal #22 is a failure sender input terminal. If this terminal is brought to ground, Terminal #15 will indicate a failure and the engine will shut down.

Terminal #23 is the Common Alarm Terminal. When any of the failutres (Terminal #13, 14, 15, 16, 17, or 20) are supplying battery voltage, Terminal #23 will be supplying battery voltage. This terminal will also supply battery voltage if the number of recranks has been satisfied or is a crank disconnect (mag pickup or auxiliary crank disconnect) has been lost. The maximum “on state” load current that Terminal #23 can supply is two (2) amps resistive.

NOTE: When an inductive load is connected on Terminal #23, a clamping diode must be connected across the inductive load.

Terminal #24 is the Oil Failure Sender Terminal. If this terminal is brought to ground after a preset time delay, set by an adjustable resistor, Terminal #14 will supply battery voltage for a failure lamp and the engine will shut down.

Terminal #5 Mag Pickup	Terminal #6 Engine Alternator	Terminal #7 Auxiliary	Terminal #12 120 Volt	Will Shut Down?
		X		YES
X				YES
X		X		YES
			X	NO
		X	X	NO
X			X	NO
X		X	X	NO
	X			NO
	X	X		NO
X	X			NO
X	X	X		NO
	X		X	NO
	X	X	X	NO
X	X		X	NO
X	X	X	X	NO

(1) Note: Both must be disconnected before unit will shut down.

For a full understanding of the crank disconnects on KASSEC, refer to the crank disconnect chart. Any combination of crank disconnects may be used. As can be seen from the chart, if the signal on Terminal #5, the Mag Pickup Crank Disconnect, is lost while KASSEC is in the "run" mode and this is the only crank disconnect being used, KASSEC will go into an "overcrank failure" mode and shut the engine down. The same is true for Terminal #7, the Auxiliary Crank Disconnect. When used by itself, if this signal is lost while KASSEC is in the "run" mode, KASSEC will go into an "overcrank failure" mode and shut the engine down.

When the combination of Terminals #5 and #7 are used together and KASSEC is in the "run" mode, both crank disconnect signals must be lost, then KASSEC will go into an "overcrank failure" mode and shut the engine down. When using any other crank disconnect or combination of other crank disconnects, loss of one or all of the crank disconnects will not shut the engine down.

INSTALLATION RECOMMENDATIONS

When solid state electronics are used as engine controls, the major problems causing the majority of malfunctions are excessive load currents connected to the outputs, low battery voltages (mainly at cranking) and EMI electrical noise. The following information will help alleviate these problems and insure a proper running system.

1. An auxiliary relay driven by KASSEC should be used whenever the current of an output exceeds the following parameters: total current of starter and ignition outputs, 8 amps; any single failure output 2 amps resistive.
2. If the cranking system for a particular engine demands a very high cranking current, another battery which supplies power only to KASSEC may be required.
3. When fused properly, the maximum load current that KASSEC can supply is 8 amps and the maximum input operating current for KASSEC is 1 amp. The size of wire used to supply power to KASSEC under maximum load should never be less than #16. Proper sizing of wire will eliminate excessive voltage drops when the system requires maximum power.
4. Although KASSEC has been designed to reject induced noise, certain precautions should be taken to reduce the common noise which is present on all engine and generator sets. To prevent false signals from being induced into the magnetic pickup circuitry of KASSEC, the wires to KASSEC from the magnetic pickup should be a twisted of shielded pair.
5. Whenever an inductive load is de-energized, a back EMF which can damage solid state components is generated. To alleviate this effect, a clamping diode should be connected across all inductive loads.
6. Components such as the ignition system, high and low voltage wiring, starter, A.C. generator wiring and battery charger to alternator all generate a certain amount of noise. If possible, wiring connected to KASSEC should be routed away from these components.

7. A voltmeter, test light or other appropriate test instrument should be used to check the input and output terminal of KASSEC. Shorting any of KASSEC's terminals to battery positive or negative when testing could create major problems if the wrong terminals were to be shorted. This type of testing can result in blown fuses and damage to KASSEC's solid state components.

NOTE: Due to the fact that KASSEC utilizes electrical control to start and stop the engine, any hydraulic or pneumatic devices such as starters or fuel solenoids must have an electrical to mechanical interface to activate them.

DIAGRAM

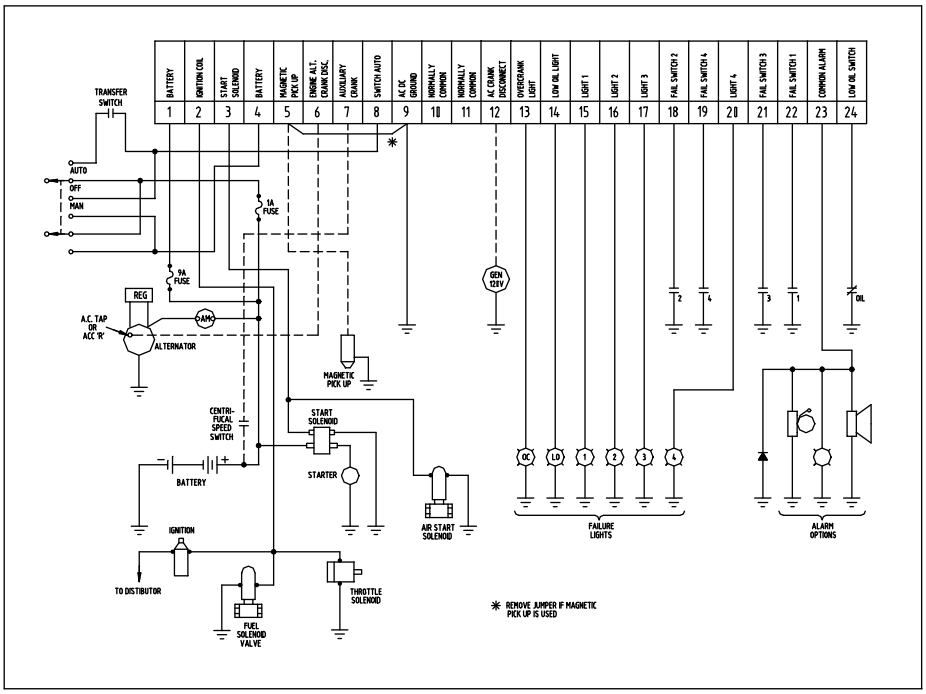

Materials and specifications subject to change without notice.
© Katolight Corporation. 100 Power Drive, Mankato, MN 56001

INSTRUCTION MANUAL

for

DGC-500

DIGITAL GENSET CONTROLLER

(Katolight equivalent is KDGC-500)

Publication: 9355400990
Revision: F 03/05

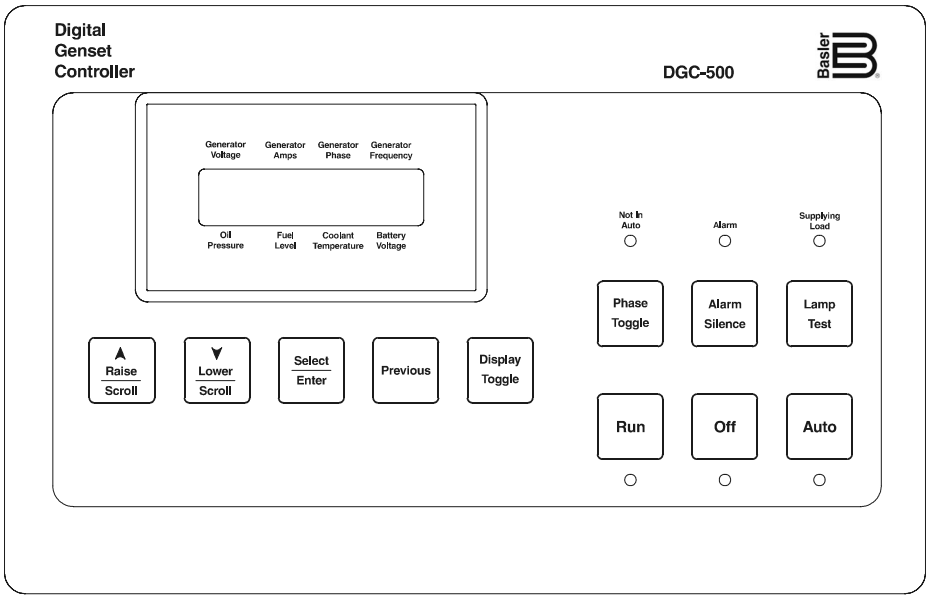

Basler Electric

INTRODUCTION

This manual provides information concerning the operation and installation of the Basler DGC-500 Digital Genset Controller. To accomplish this, the following information is provided.

- Specifications
- Functional Description
- Communication Software Description
- Installation Information
- Troubleshooting Information

WARNING!

To avoid personal injury or equipment damage, only qualified personnel should perform the procedures presented in this manual.

Katolight Service - Master Repair Manual - Page 1808

First Printing: March 2002

Printed in USA

Copyright 2002–2005 Basler Electric, Highland, Illinois 62249 USA

All rights reserved

March 2005

CONFIDENTIAL INFORMATION

Of Basler Electric. It is loaned for confidential use, subject to return on request, and with the mutual understanding that it will not be used in any manner detrimental to the interest of Basler Electric.

It is not the intention of this manual to cover all details and variations in equipment, nor does this manual provide data for every possible contingency regarding installation or operation. The availability and design of all features and options are subject to modification without notice. Should further information be required, contact Basler Electric.

BASLER ELECTRIC
ROUTE 143, BOX 269
HIGHLAND, IL 62249 USA
http://www.basler.com, info@basler.com
PHONE +1 618.654.2341 **FAX +1 618.654.2351**

PRODUCT REVISION HISTORY

The following information provides a historical summary of the changes made to the embedded firmware, communication software (BESTCOMS), and hardware of this device. The corresponding revisions made to this instruction manual are also summarized. This revision history is separated into four categories: Firmware Version, BESTCOMS Version, Hardware Version, and Manual Version. All revisions are listed in reverse chronological order.

Firmware Version	Summary
3.06.XX - 03/05	• Added configurable ECU contact, pulsing, and sleep mode disables, and single-phase A-C sensing.
3.05.XX - 09/04	• Added generator protection, event log, real-time clock, run statistics, and sleep mode.
2.04.XX - 10/03	• Added Engine Start/Stop Configuration setting to accommodate Volvo Penta EDC applications. Added CANBus Address setting and Genset kW Rating setting.
2.03.XX - 03/03	• Added support for SAE J1939 interface and 400 Hz operation
2.01.XX - 07/02	• Increased the maximum Sender Failure Alarm time delay setting from 10 seconds to 30 seconds.
1.00.XX - 03/02	• Initial release

BESTCOMS Version	Summary
1.05.XX - 03/05	• Added configurable ECU contact, pulsing, and sleep mode disables, and single-phase A-C sensing.
1.04.XX - 09/04	• Added generator protection, event log, real-time clock, and run statistics.
1.03.XX - 10/03	• Added Engine Start/Stop Configuration setting to accommodate Volvo Penta EDC applications. Added CANBus Address setting and Genset kW Rating setting.
1.02.XX - 03/03	• Added settings for support of SAE J1939 interface and 400 Hz operation.
1.01.XX - 07/02	• Increased the maximum setting of the Global Sender Failure Alarm Time Delay from 10 seconds to 30 seconds.
1.00.XX - 03/02	• Initial release

Hardware Version (Standard Order P/N)	Summary
Q - 12/04	• Modified current metering circuitry.
P - 11/04	• BESTCOMS version 1.04.01 released to address compatibility issue with Microsoft® Windows® XP SP2.
O	• Not implemented
N - 09/04	• Implemented a higher-performance microprocessor and added an external memory (EEPROM) chip.
M - 06/04	• Increased moisture resistance by adding conformal coating to the printed circuit board assembly.

Katolight Service - Master Repair Manual - Page 1810

Hardware Version (Standard Order P/N)	Summary
L - 10/03	• Implemented firmware version 2.04.XX and BESTCOMS version 1.03.XX
K - 09/03	• Added reference to instruction manual on parts list
J - 07/03	• Implemented firmware version 2.03.XX and BESTCOMS version 1.02.XX
I	• Not implemented
H - 06/03	• Circuit board layout revised to improve manufacturing process
G - 04/02	• Initial release

Hardware Version (Special Order P/N)	Summary
H - 12/04	• Modified current metering circuitry.
G - 11/04	• BESTCOMS version 1.04.01 released to address compatibility issue with Microsoft® Windows® XP SP2.
F - 09/04	• Implemented a higher-performance microprocessor and added an external memory (EEPROM) chip.
E - 06/04	• Increased moisture resistance by adding conformal coating to the printed circuit board assembly.
D - 10/03	• Implemented firmware version 2.04.XX and BESTCOMS version 1.03.XX
C - 09/03	• Added reference to instruction manual on parts list
B - 07/03	• Implemented firmware version 2.03.XX and BESTCOMS version 1.02.XX
A - 06/03	• Circuit board layout revised to improve manufacturing process

Manual Version	Summary
F - 03/05	• Added description of Sleep mode disable setting. • Added information about ECU contact configuration and pulsing settings. • Changed all “Volvo Penta EDC” references to “Volvo Penta EDC III”. • Added J1939 interface parameters to Appendix C, *DGC-500 Settings Record*.
E - 09/04	• Added text and illustrations describing added real-time clock, generator run statistics, event log, and generator protection functions. • Added *Time Overcurrent Characteristic Curves* appendix. • Modified style chart to accommodate generator protection option. • Added torque specification for mounting hardware.
D - 03/04	• Added suitability and warning statements concerning compliance of part numbers 9 3554 00 113 and 9 3554 00 114 with cURus Standard 1604.
C - 09/03	• Added descriptions associated with new settings: CANBus Address, Engine Stop/Start Configuration, and Genset’s kW Rating. • Added information pertaining to DGC Isolator Kits. • Added Volvo Penta EDC application information and diagrams. • Updated Pre-Alarm and Alarm information in Section 3, *Functional Description* to include metric equivalents for settings.

Katolight Service - Master Repair Manual - Page 1811

Manual Version	Summary
B - 03/03	• Revised style chart to show NFPA compliance as standard, J1939 support as optional. • Added coverage for part numbers 9 3554 00 111, 112, 113, and 114. • Added information about J1939 interface, ECU support, and state machine operation where appropriate. • Revised BESTCOMS section to accommodate new ECU settings. • Created new appendix of settings list with range for each setting.
A - 07/02	• Added instructions to Section 3, *Functional Description* for viewing firmware version. • Revised the maximum setting of Sender Failure Alarm Time from 10 seconds to 30 seconds in Tables 3-1 and 3-2. • Replaced actual BESTCOMS version number in Figure 4-2 with generic version number.
— - 02/02	• Initial release

This page intentionally left blank.

CONTENTS

SECTION 1 • GENERAL INFORMATION 1-1

SECTION 2 • HUMAN-MACHINE INTERFACE 2-1

SECTION 3 • FUNCTIONAL DESCRIPTION 3-1

SECTION 4 • BESTCOMS SOFTWARE 4-1

SECTION 5 • INSTALLATION 5-1

SECTION 6 • MAINTENANCE AND TROUBLESHOOTING 6-1

APPENDIX A • TIME OVERCURRENT CHARACTERISTIC CURVES A-1

APPENDIX B • PARAMETERS AND SETTINGS B-1

APPENDIX C • DGC-500 SETTINGS RECORD C-1

Katolight Service - Master Repair Manual - Page 1814

This page intentionally left blank.

SECTION 1 • GENERAL INFORMATION

TABLE OF CONTENTS

SECTION 1 • GENERAL INFORMATION 1-1
- DESCRIPTION 1-1
- FEATURES 1-1
- FUNCTIONS 1-1
- OUTPUTS 1-2
- OPTIONAL EQUIPMENT 1-2
- STYLE AND PART NUMBERS 1-2
  - Style Numbers 1-2
  - Part Numbers 1-2
- SPECIFICATIONS 1-3
    - Current Sensing 1-3
    - 1 Ampere Inputs 1-3
    - 5 Ampere Inputs 1-3
    - Voltage Sensing 1-3
    - Frequency 1-3
    - Contact Sensing 1-3
    - Emergency Stop Input 1-3
    - Programmable Inputs (3) 1-3
    - Engine System Inputs 1-4
    - Fuel Level Sensing 1-4
    - Coolant Temperature Sensing 1-4
    - Oil Pressure Sensing 1-4
    - Battery Voltage Sensing 1-4
    - Magnetic Pickup Sensing 1-4
    - Engine RPM Sensing 1-4
  - Calculated Data 1-4
    - Voltamperes 1-4
    - Engine Run Time 1-4
    - Maintenance Interval 1-4
  - Generator Protection Functions 1-4
    - Overvoltage (59) and Undervoltage (27) 1-4
    - Underfrequency (81U) and Overfrequency (81O) 1-5
    - Overcurrent (51) 1-5
    - Phase Imbalance (47) 1-5
  - Output Contacts 1-5
    - Engine Crank, Fuel Solenoid, and Pre-Start Relays 1-5
    - Programmable Relays (2) 1-5
  - Horn Output 1-5
  - Communication Interface 1-5
    - Full Duplex RS-232 1-5
    - SAE J1939 Interface 1-5
  - Environment 1-6
    - Temperature Range 1-6
  - Type Tests 1-6
    - Shock 1-6
    - Vibration 1-6
    - Salt Fog 1-6
    - Radio Interference 1-6
    - Dielectric Strength 1-6
  - UL Recognition 1-6
    - Part Numbers 9355400113 and 9355400114 1-6

CSA Certification 1-6
NFPA Compliance 1-7
Physical 1-7
Weight 1-7

Figures

Figure 1-1. DGC-500 Style Number Chart 1-2

Tables

Table 1-1. Special-Order DGC-500 Controllers 1-3

Katolight Service - Master Repair Manual - Page 1817

SECTION 1 • GENERAL INFORMATION

DESCRIPTION

The DGC-500 Digital Genset Controller provides integrated engine-generator set control, protection, and metering in a single package. Microprocessor based technology allows for exact measurement, setpoint adjustment, and timing functions. Front panel controls and indicators enable quick and simple DGC-500 operation. Basler Electric communication software (BESTCOMS-DGC500-32) allows units to be easily customized for each application. Because of the low sensing burden in the DGC-500, neither dedicated potential transformers (PTs) nor current transformers (CTs) are required. A wide temperature-range liquid crystal display (LCD) with backlighting can be viewed under a wide range of ambient light and temperature conditions.

An event log retains a history of system events in nonvolatile memory. Up to 30 event types are retained and each record contains a time stamp and the number of occurrences for each event.

Optional, multifunction generator protection guards against generator overvoltage, undervoltage, underfrequency, overfrequency, overcurrent, and phase imbalance. Each generator protection function has an adjustable pickup and time delay setting. Sixteen inverse time curves enable the DGC-500 to offer overcurrent protection in a variety of applications.

An optional, SAE J1939 interface provides high-speed communication between the DGC-500 and the engine control unit (ECU) on an electronically controlled engine. This interface provides access to oil pressure, coolant temperature, and engine speed data by reading these parameters directly from the ECU. When available, engine diagnostic data can also be accessed.

FEATURES

DGC-500 Digital Genset Controllers have the following features.

- Resistant to high moisture, salt fog, humidity, dust, dirt, and chemical contaminants
- Resistant to the entrance of insects and rodents
- Suitable for mounting in any top mount enclosure
- Suitable for controlling isolated generating systems or paralleled generating systems
- Serial link communications and BESTCOMS software eases access to setup parameters
- Compliant with National Fire Prevention Association (NFPA) Standard 110
- Optional SAE J1939 interface provides high-speed communication with the ECU on electronically controlled engines

FUNCTIONS

DGC-500 Digital Genset Controllers perform the following functions.

- Engine cranking control
- Generator voltage metering
- Generator frequency metering
- Generator current metering
- Engine coolant temperature metering
- Engine coolant temperature protection
- Engine oil pressure metering
- Engine oil pressure protection
- Fuel level sensing
- Fuel level sender protection
- Fuel leak detector
- Engine cool down
- VA metering
- Engine rpm metering
- Engine run time metering
- Battery voltage metering
- Battery condition monitoring
- Engine maintenance monitoring
- Engine diagnostic reporting
- Event log stores a history of up to 30 system event types
- Multifunction generator protection (optional)

Katolight Service - Master Repair Manual - Page 1818

OUTPUTS

Five isolated, form A output contacts are provided: Engine Crank, Fuel Solenoid, Pre-Start, and two user-programmable outputs.

OPTIONAL EQUIPMENT

An optional Remote Annunciation Display Panel (RDP-110) is available for use with the DGC-500.

Applications that require remote annunciation can use the Remote Display Panel, RDP-110. This display panel annunciates all DGC-500 alarms, pre-alarms, and operating conditions.

STYLE AND PART NUMBERS

Standard-order DGC-500 controllers are identified by a style number. Special-order DGC-500 controllers are specified by ten-digit part numbers

Style Numbers

The electrical characteristics and operational features of a standard-order DGC-500 are defined by a combination of letters and numbers that make up the style number. The model number, together with the style number, describe the options included in a specific device. Figure 1-1 illustrates the DGC-500 style number identification chart.

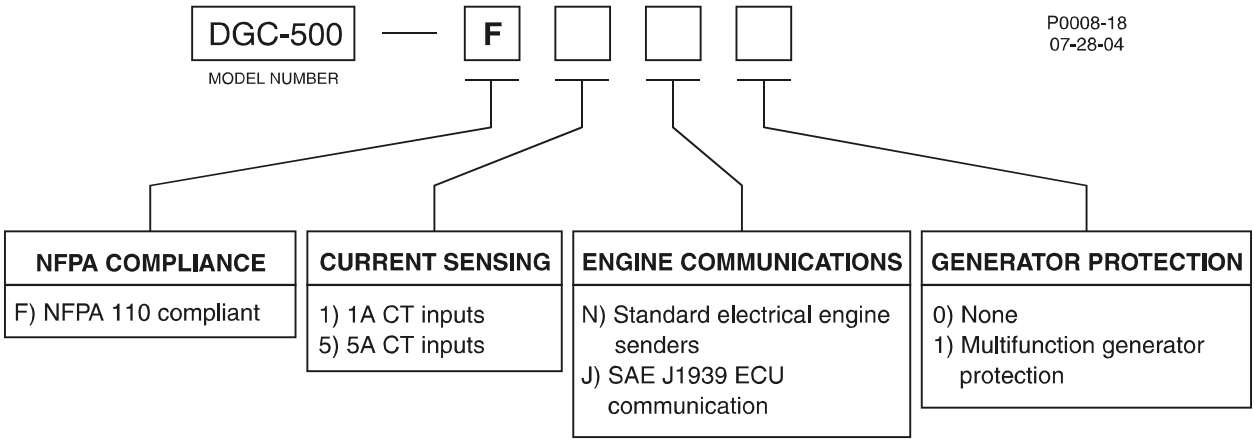

Figure 1-1. DGC-500 Style Number Chart

For example, if a DGC-500 style number is F5J1, the device has the following characteristics and operating features.

F . . . . Compliance to NFPA Standard 110
5 . . . . 5 ampere current sensing inputs
J . . . . ECU communication through the SAE J1939 protocol
1 . . . . Multifunction generator protection

The DGC-500 style number is printed on a label located on the circuit board near the voltage and current input connections. Upon receipt of a unit, be sure to check the style number against the requisition and the packing list to ensure that they agree.

Part Numbers

A ten-digit part number specifies the electrical characteristics and operational features of special-order DGC-500 controllers. Table 1-1 lists the special-order DGC-500 controllers available along with descriptions of their operating features.

Table 1-1. Special-Order DGC-500 Controllers

Part Number	Style Number	Special Features
9355400111	F5J0	400 Hz nominal frequency
9355400112	F1J0	
9355400127	F5J1	
9355400128	F1J1	
9355400113	F5J0	cURus recognized for use in hazardous locations
9355400114	F1J0	
9355400129	F5J1	
9355400130	F1J1	

SPECIFICATIONS

Current Sensing

Accuracy: ±1% of full scale or ±2 A, whichever is greater
Burden: 1 VA
Terminals: P10, P11 (A-phase)
P12, P14 (B-phase)
P15, P17 (C-phase)

1 Ampere Inputs

Continuous Rating: 0.02 to 1.0 A
1 Second Rating: 2 A

5 Ampere Inputs

Continuous Rating: 0.1 to 5.0 A
1 Second Rating: 10 A

Voltage Sensing

Accuracy: ±1% of full scale or ±2 V, whichever is greater
Burden: 1 VA
Range: 12 to 576 V rms, line-to-line
1 Second Rating: 720 V rms
Terminals: P23 (A-phase), P26 (B-phase), P29 (C-phase), P30 (Neutral)

Frequency

Accuracy: ±0.25% of reading or ±0.2 Hz, whichever is greater
Display Range: 4 to 70 Hz
4 to 450 Hz (P/N 9355400111, 9355400112 only)

Contact Sensing

Emergency Stop Input

Type: Normally-closed dry contacts
Terminals: P35, P39

Programmable Inputs (3)

Type: Normally-open dry contacts
Terminals: P2, P21 (Input 1)
P3, P21 (Input 2)
P4, P21 (Input 3)

Engine System Inputs

✳ Stated accuracies are subject to the accuracy of the senders used.

Fuel Level Sensing

Accuracy:	±3% of indication or ±2% ✳
Range:	33 to 240 Ω nominal
Terminals:	P16, P19 (common)

Coolant Temperature Sensing

Accuracy:	±3% of indication (37°C to 115°C (99°F to 239°F))
	±2°, whichever is greater at 25°C (77°F) ✳
Range:	62.6 to 637.5 Ω nominal
Terminals:	P18, P19 (common)

Oil Pressure Sensing

Accuracy:	±3% of indication (0 to 690 kPa) or ±12 kPa, whichever is greater at 25°C (77°F)
	±3% of indication (0 to 100 psi) or ±2 psi, whichever is greater
Range:	34 to 240 Ω nominal
Terminals:	P13, P19 (common)

Battery Voltage Sensing

Accuracy:	±3% of indication or ±0.2 V, whichever is greater
Nominal:	12 or 24 Vdc
Range:	8 to 32 Vdc (battery dip ride-through to 6 Vdc for 0.75 sec)
Burden:	16 W maximum

Magnetic Pickup Sensing

Voltage Range:	3 V to 35 V peak continuous into 13 kΩ (during cranking)
Frequency Range:	32 to 10,000 Hz
Terminals:	P39 (+), P40 (–)

Engine RPM Sensing

Accuracy:	±0.5% of indication or ±2 rpm, whichever is greater at 25°C (77°F)
Range:	750 to 3,600 rpm

Calculated Data

Voltamperes

Accuracy:	±2% of indication or ±2 kVA, whichever is greater
Range:	0 to 9,999 kVA

Engine Run Time

Accuracy:	±0.5% of reading or ±1 hour, whichever is greater at 25°C (77°F)
Range:	0 to 99,999 hours

Maintenance Interval

Accuracy:	±0.5% of reading or ±1 hour, whichever is greater at 25°C (77°F)
Range:	0 to 5,000 hours

Generator Protection Functions

Overvoltage (59) and Undervoltage (27)

Pickup Range:	70 to 576 Vac
Pickup Increment:	1 Vac
Inhibit Frequency Range:	20 to 400 Hz (applies to 27 function only)
Time Delay Range:	0 to 30 s
Time Delay Increment:	0.1 s

Katolight Service - Master Repair Manual - Page 1821

Underfrequency (81U) and Overfrequency (81O)

Pickup Range:	45 to 65 Hz (50/60 Hz nominal) 360 to 440 Hz (400 Hz nominal)
Pickup Increment:	0.1 Hz
Inhibit Voltage Range:	70 to 576 Vac (applies to 81U function only)
Time Delay Range:	0 to 30 s
Time Delay Increment:	0.1 s

Overcurrent (51)

Pickup Range:	0.18 to 1.18 Aac (1 A current sensing) 0.9 to 7.75 Aac (5 A current sensing)
Time Dial Range:	0 to 30 s (fixed time delay) 0 to 9.9 (inverse curve time multiplier)
Time Dial Increment:	0.1 s
Inverse Time Curves:	See Appendix A, *Time Overcurrent Characteristic Curves*

Phase Imbalance (47)

Pickup Range:	5 to 100 Vac
Pickup Increment:	1 Vac
Time Delay Range:	0 to 30 s
Time Delay Increment:	0.1 s

Output Contacts

Engine Crank, Fuel Solenoid, and Pre-Start Relays

Rating:	30 A at 28 Vdc, make, break, and carry ✳
Terminals:	K1-N.O., COM (Engine Crank) K2-N.O., COM (Fuel Solenoid) K5-N.O., COM (Pre-Start)

✳ The contact rating is reduced to 3 A for part numbers 9355400113 and 9355400114 when used in a hazardous location.

Programmable Relays (2)

Rating:	2 A at 30 Vdc, make break, and carry
Terminals:	P33, P34 (Output 1) P36, P38 (Output 2)

Horn Output

Voltage:	24 Vdc or battery voltage, whichever is less
Current:	15 mAdc maximum
Compatible Device:	Basler P/N 29760
Terminals:	P24 (+), P25 (–)

Communication Interface

Full Duplex RS-232

Connection:	Female DB-9 connector (J1)
Baud:	1200, 2400, or 9600
Data Bits:	8
Parity:	None, Odd, or Even
Stop Bit:	1

SAE J1939 Interface

Differential Bus Voltage:	1.5 to 3 Vdc
Maximum Voltage:	–32 to 32 Vdc (with respect to negative battery terminal)
Communication Rate:	250 kb/s

Environment

Temperature Range

Operating:	–20 to 60°C (–4 to 140°F)
Storage:	–40 to 85°C (–40 to 185°F)

Type Tests

Shock

15 G in 3 perpendicular planes

Vibration

Swept over the following ranges for 12 sweeps in each of three mutually perpendicular planes with each 15 minute sweep consisting of the following:

5 to 29 to 5 Hz:	1.5 G peak for 5 min.
29 to 52 to 29 Hz:	0.036" DECS-A for 2.5 min.
52 to 500 to 52 Hz:	5 G peak for 7.5 min.

Salt Fog

Tested per ASTM-117B-1989

Radio Interference

Type tested using a 5 W, hand-held transceiver operating at random frequencies centered around 144 and 440 MHz with the antenna located within 150 mm (6") of the device in both vertical and horizontal planes.

Dielectric Strength

2,352 Vac at 50/60 Hz for 1 second between voltage sensing inputs and all other circuits.

500 Vac at 50/60 Hz for 1 minute between any of the following groups.

- Current Sensing Inputs: 8 mA
- RS-232 Port: 6 mA

UL Recognition

All DGC-500 controllers are UL recognized per Standard 508, *Standard for Industrial Control Equipment* (UL File E97035).

Part Numbers 9355400113 and 9355400114

cURus recognized per Standard 1604, *Electrical Equipment for Use in Class I and II, Division 2, and Class III Hazardous (Classified) Locations*, Class I, Division 2, Groups A, B, C, D, Zone 2, Temperature Code T5.

This equipment is suitable for use in Class I, Division 2, Groups A, B, C, D, or nonhazardous locations only.

WARNING! – EXPLOSION HAZARD
(9355400113 and 9355400114 only)

Substitution of components may impair suitability for Class I, Division 2.

Do not disconnect equipment unless power has been switched off or the area is known to be non-hazardous.

CSA Certification

Certified per Standard CAN/CSA-C22.2,
Number 14-95, CSA File LR 23131 (excludes P/N 9355400113, 9355400114)

NFPA Compliance

All DGC-500 controllers comply with NFPA Standard 110, *Standard for Emergency and Standby Power Systems*.

Physical

Weight: 680 g (1.5 lb)

This page intentionally left blank.

SECTION 2 • HUMAN-MACHINE INTERFACE

TABLE OF CONTENTS

SECTION 2 • HUMAN-MACHINE INTERFACE 2-1
INTRODUCTION 2-1
FRONT PANEL 2-1
REAR PANEL 2-2

Figures

Figure 2-1. DGC-500 Front Panel HMI 2-1
Figure 2-2. DGC-500 Rear Panel HMI 2-3

Tables

Table 2-1. DGC-500 Front Panel HMI Descriptions 2-2
Table 2-2. DGC-500 Rear Panel HMI Descriptions 2-3

Katolight Service - Master Repair Manual - Page 1826

This page intentionally left blank.

Katolight Service - Master Repair Manual - Page 1827

SECTION 2 • HUMAN-MACHINE INTERFACE

INTRODUCTION

This section describes the components of the DGC-500 human-machine interface (HMI). DGC-500 HMI components are located on the front panel (controls and indicators) and the rear panel (terminals and connectors).

FRONT PANEL

Figure 2-1 illustrates the front panel HMI of the DGC-500. Table 2-1 lists the call-outs of Figure 2-1 along with a description of each HMI component.

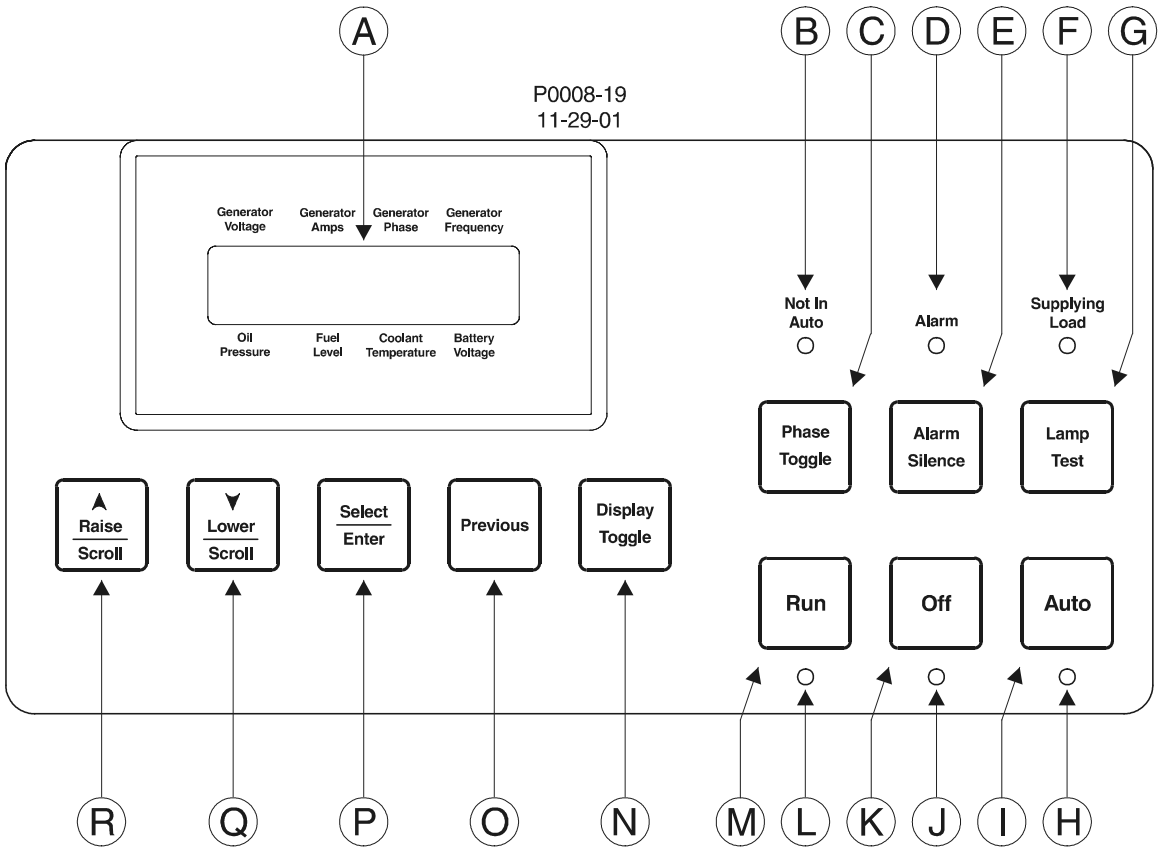

Figure 2-1. DGC-500 Front Panel HMI

Katolight Service - Master Repair Manual - Page 1828

Table 2-1. DGC-500 Front Panel HMI Descriptions

Call-Out	Description
A	*Liquid Crystal Display.* The backlit, two line by 16 character LCD is the primary interface for metering, alarms, pre-alarms, and protective functions. The LCD has three standard display modes (Normal, Alternate, and Menu) and one optional display mode (ECU Parameters). In Normal mode, the displayed parameters correspond to one of the eight labels surrounding the LCD. In Alternate mode, the LCD displays parameters and the corresponding labels. In Menu mode, the LCD scrolls through the DGC-500 setup parameters. In the optional ECU Parameters mode, the LCD scrolls through genset parameters (metered from the ECU) and engine configuration parameters.
B	*Not in Auto Indicator.* This red LED lights when the DGC-500 is not operating in Auto mode.
C	*Phase Toggle Pushbutton.* Pressing this control scrolls through the parameters available in Normal display mode.
D	*Alarm Indicator.* This red LED lights continuously during alarm conditions and flashes during pre-alarm conditions.
E	*Alarm Silence Pushbutton.* Pressing this control resets the DGC-500 audible alarm.
F	*Supplying Load Indicator.* This green LED lights when the generator is supplying more than two percent of rated current.
G	*Lamp Test Pushbutton.* Pressing this control tests the DGC-500 indicators by exercising all LCD segments and lighting all LEDS.
H	*Auto Mode Indicator.* This green LED lights when the DGC-500 is operating in Auto mode.
I	*Auto Pushbutton.* Pressing this control places the DGC-500 in Auto mode.
J	*Off Mode Indicator.* This red LED lights when the DGC-500 is in Off mode.
K	*Off Pushbutton.* Pressing this control places the DGC-500 in Off mode.
L	*Run Mode Indicator.* This green LED lights when the DGC-500 is operating in Run mode.
M	*Run Pushbutton.* Pressing this control places the DGC-500 in Run mode.
N	*Display Toggle Pushbutton.* Pressing this control scrolls through the display modes.
O	*Previous Pushbutton.* Pressing this control scrolls through the LCD display modes.
P	*Select/Enter Pushbutton.* This control is pressed to enter menu sub-levels and select setpoints.
Q	*Lower/Scroll Pushbutton.* This control is pressed to scroll backward through menus or decrement setpoints.
R	*Raise/Scroll Pushbutton.* This control is pressed to scroll forward through menus or increment setpoints.

REAR PANEL

All DGC-500 interface terminals are located on the rear panel. DGC-500 units have two types of terminals: quarter-inch, male, quick-connect terminals and a DB9 serial communication connector. Figure 2-2 illustrates the DGC-500 rear-panel HMI. Table 2-2 lists the call-outs of Figure 2-2 along with a description of each rear-panel HMI component.

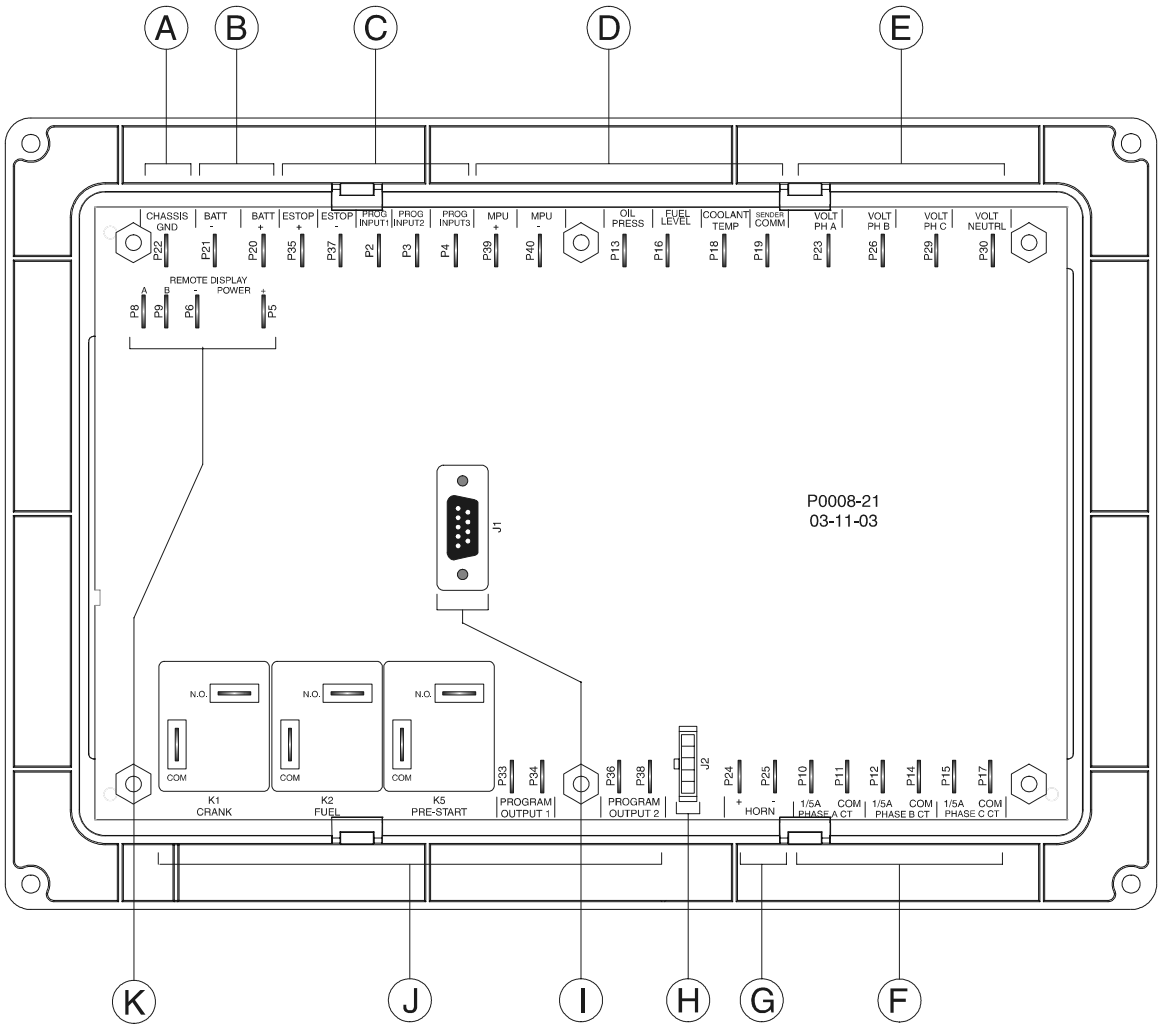

Figure 2-2. DGC-500 Rear Panel HMI

Table 2-2. DGC-500 Rear Panel HMI Descriptions

Call-Out	Terminals	Description
A	P22	*CHASSIS GND.* This terminal provides the chassis ground connection. The DGC-500 must be hard-wired to earth ground with no smaller than 12 AWG copper wire.
B	P20 (+), P21 (–)	*BATT.* DGC-500 operating power is applied to these terminals. The DGC-500 accepts a nominal input of 12 Vdc or 24 Vdc.
C	P35 (+), P37 (–) P2, P3, P4	**Contact Sensing Terminals** *ESTOP.* These terminals function as the Emergency Stop input. Power is removed from all DGC-500 output relays when this input is open. PROG INPUT1, PROG INPUT2, PROG INPUT3. These three inputs can be independently programmed to function as an auto transfer switch input, single-phase override input, low coolant level input, fuel leak detection input, battery charger failure input, or an auxiliary input. The inputs accept normally-open contacts connected between terminals P2 (PROG INPUT1), P3 (PROG INPUT2), or P4 (PROG INPUT3) and terminal P21 (BATT –).

Call-Out	Terminals	Description
D		**Transducer Terminals**
	P39 (+), P40 (–)	*MPU.* These terminals accept the output from a magnetic pickup. Voltage applied to this input is scaled and conditioned for use as a speed signal.
	P13	*OIL PRESS.* The output from an oil pressure transducer is applied to this input. A current signal lower than 5 mA can be applied between terminal P13 and P19 (SENDER COMM).
	P16	*FUEL LEVEL.* The output from a fuel level transducer is applied to this input. The DGC-500 supplies a transducer current signal of less than 30 mA to terminals P13 and P19 (SENDER COMM).
	P18	*COOLANT TEMP.* The output from a coolant temperature transducer is applied to this input. The DGC-500 supplies a transducer current signal of less than 5 mA to terminals P16/P18 and P19 (SENDER COMM).
	P19	*SENDER COMM.* This terminal functions as the common return line for all of the transducer inputs.
E		**Voltage Sensing Terminals**
	P23	*VOLT PH A.* This terminal senses the A-phase generator voltage.
	P26	*VOLT PH B.* This terminal senses the B-phase generator voltage.
	P29	*VOLT PH C.* This terminal senses the C-phase generator voltage.
	P30	*VOLT NEUTRAL.* This terminal connects to the generator Neutral in phase-to-neutral sensing applications.
F		**Current Sensing Terminals**
	P10(1/5A), P11(COM)	*PHASE A CT.* These terminals sense the A-phase generator current.
	P12(1/5A), P14(COM)	*PHASE B CT.* These terminals sense the B-phase generator current.
	P15(1/5A), P17(COM)	*PHASE C CT.* These terminals sense the C-phase generator current.
G	P24 (+), P25(–)	*HORN.* This output supplies power to an external horn. The voltage supplied is 24 Vdc or the battery voltage, whichever is less. A maximum current of 15 mAdc is available.
H	J2	*SAE J1939 Connector.* This connector is enabled on controllers with a style number of FXJ and provides high-speed communication between the DGC-500 and the ECU on an electronically controlled engine.
I	J1	*RS-232 COMMUNICATION PORT.* This DB9 connector uses serial communication to enhance DGC-500 setup. A standard serial cable connects the DGC-500 to a PC.
J		**Output Contact Terminals**
	K1-N.O., K1-COM	*CRANK.* This output is closed when the DGC-500 is initiating engine cranking.
	K2-N.O., K2-COM	*FUEL.* This output closes when engine cranking is initiated and remains closed until a stop command is received by the DGC-500.
	K5-N.O., K5-COM	*PRE-START.* This output closes to energize the glow plugs prior to engine cranking. Depending on system setup, the Pre-Start output may open upon engine startup or stay closed during engine operation.
	P33, P34	*PROGRAM OUTPUT1.* This output closes when a user-programmable condition is detected by the DGC-500.
	P36, P38	*PROGRAM OUTPUT2.* This output closes when a user-programmable condition is detected by the DGC-500.

Katolight Service - Master Repair Manual - Page 1831

Call-Out	Terminals	Description
K		**Remote Display Terminals**
	P5 (+), P6 (–)	*Power.* These terminals provide operating power to the optional Remote Display Panel (RDP-110).
	P8 (A), P9 (B)	*Communication.* These terminals provide an RS-485 interface for communication with the optional Remote Display Panel (RDP-110).

Katolight Service - Master Repair Manual - Page 1832

This page intentionally left blank.

Katolight Service - Master Repair Manual - Page 1833

SECTION 3 • FUNCTIONAL DESCRIPTION

TABLE OF CONTENTS

SECTION 3 • FUNCTIONAL DESCRIPTION 3-1
INTRODUCTION 3-1
DGC-500 FUNCTION BLOCKS 3-1
Power Supply 3-1
Battery Voltage Sensing 3-1
Microprocessor 3-1
Zero Crossing Detection 3-2
Analog-to-Digital Converter 3-2
Voltage Sensing Inputs 3-2
Current Sensing Inputs 3-2
Transducer Inputs 3-2
Oil Pressure 3-2
Coolant Temperature 3-2
Fuel Level 3-2
Speed Signal Inputs 3-3
Voltage Sensing Inputs 3-3
Magnetic Pickup Input 3-3
Contact Input Circuitry 3-3
Emergency Stop Input 3-3
Programmable Inputs 3-3
Front Panel HMI 3-3
LCD 3-3
LEDs 3-4
Pushbuttons 3-4
Remote Display Panel 3-4
RS-232 Communication Port 3-4
SAE J1939 Interface (Optional) 3-4
Diagnostic Trouble Codes (DTCs) 3-6
Horn Output 3-7
Output Contacts 3-7
Pre-Start 3-7
Crank 3-7
Fuel 3-7
Programmable 3-8
SOFTWARE OPERATION 3-8
Power-Up Sequence 3-8
Cranking 3-8
Continuous Cranking 3-9
Cycle Cranking 3-9
Pre-Alarms 3-9
Low Oil Pressure 3-9
Low Fuel 3-9
High Coolant Temperature 3-9
Low Coolant Temperature 3-9
Battery Overvoltage 3-9
Low Battery Voltage 3-9
Weak Battery Voltage 3-10
Maintenance Interval 3-10
Battery Charger Failure 3-10
Fuel Level Sender Failure 3-10
MPU Failure 3-10
Active DTC 3-10

CAN Failure . . . 3-10
Audible Alarm . . . 3-10
Alarms . . . 3-10
Low Oil Pressure . . . 3-11
Low Fuel Level . . . 3-11
High Coolant Temperature . . . 3-11
Overspeed . . . 3-11
Loss of Generator Voltage . . . 3-11
Oil Pressure Sender Failure . . . 3-11
Coolant Temperature Sender Failure . . . 3-11
Speed Source Failure . . . 3-11
CAN Failure (If Equipped) . . . 3-12
Real-Time Clock . . . 3-12
Generator Run Statistics . . . 3-12
Event Log . . . 3-12
Generator Protection . . . 3-13
Overvoltage (59) . . . 3-13
Undervoltage (27) . . . 3-13
Frequency (81) . . . 3-13
Overcurrent (51) . . . 3-14
Phase Imbalance (47) . . . 3-14
DISPLAY OPERATION . . . 3-14
Normal Mode . . . 3-15
Firmware Version . . . 3-15
Alternate Mode . . . 3-15
Diagnostic Trouble Codes (DTCs) . . . 3-15
ECU Parameters Mode . . . 3-17
Engine Configuration Parameters . . . 3-18
Menu Mode . . . 3-19
Menu 1 . . . 3-20
Menu 2 . . . 3-20
Menu 3 . . . 3-20
Menu 4 . . . 3-20
Menu 5 . . . 3-20
Exiting Menu Mode . . . 3-20
Sleep Mode . . . 3-20
Changing Settings . . . 3-25
Setting the Real-Time Clock at the Front Panel . . . 3-25
Key Code . . . 3-25
Front Panel Adjustable Parameters . . . 3-26
ENGINE CONTROL UNIT (ECU) SUPPORT . . . 3-26
Enabling ECU Support . . . 3-26
ECU Constraints . . . 3-26
The DGC-500 Solution . . . 3-27
Alarms and Pre-Alarms . . . 3-27
Fuel Solenoid Relay . . . 3-27
Display Values (ECU Support Enabled) . . . 3-27
ECUs with an External Fuel Solenoid . . . 3-28
STATE MACHINES . . . 3-28
System Configuration . . . 3-28
Operating States . . . 3-28
State Transitions . . . 3-29
Normal Program Control . . . 3-29
ECU Power Support Program Control . . . 3-29
Initial State - Power Up/Reset . . . 3-30
Ready State . . . 3-31
Going to Off or Auto-Off . . . 3-31
Pulsing State . . . 3-32

Katolight Service - Master Repair Manual - Page 1835

Connecting State 3-32
Pre-Start State 3-32
Cranking State 3-33
Resting State 3-33
Running State 3-34
Cooling State 3-34
Shutting Down State 3-35
Alarm State 3-35

Figures

Figure 3-1. DGC-500 Function Block Diagram 3-1
Figure 3-2. Display Mode Navigation 3-14
Figure 3-3. Alternate Mode Navigation 3-15
Figure 3-4. Lamp Status Screen 3-16
Figure 3-5. DTC Screen Example 3-16
Figure 3-6. ECU Parameters Navigation 3-18
Figure 3-7. Engine Configuration Menu Navigation 3-19
Figure 3-8. Menu Mode Navigation 3-19
Figure 3-9. Menu 1 Navigation 3-21
Figure 3-10. Menu 2 Navigation 3-22
Figure 3-11. Menu 3 Navigation 3-23
Figure 3-12. Menu 4 Navigation 3-24
Figure 3-13. Menu 4 Navigation 3-24
Figure 3-14. Setting Change Example 3-25
Figure 3-15. Screens Shown Following Unsuccessful Information Update from ECU 3-28
Figure 3-16. Normal Program Control Diagram 3-29
Figure 3-17. ECU Power Support Program Control Diagram 3-30
Figure 3-18. Power Up/Reset State Diagram 3-31
Figure 3-19. Ready State Diagram 3-31
Figure 3-20. Pulsing State Diagram 3-32
Figure 3-21. Connecting State Diagram 3-32
Figure 3-22. Pre-Start State Diagram 3-33
Figure 3-23. Cranking State Diagram 3-33
Figure 3-24. Resting State Diagram 3-34
Figure 3-25. Running State Diagram 3-34
Figure 3-26. Cooling State Diagram 3-35
Figure 3-27. Shutting down State Diagram 3-35
Figure 3-28. Alarm State Diagram 3-36

Tables

Table 3-1. ECU Parameters Obtained from CAN Interface 3-5
Table 3-2. Engine Configuration Parameters Obtained from CAN Interface 3-6
Table 3-3. Diagnostic Information Obtained Over the CAN Interface 3-7
Table 3-4. Front Panel Adjustable Settings 3-26

This page intentionally left blank.

SECTION 3 • FUNCTIONAL DESCRIPTION

INTRODUCTION

This section describes how the DGC-500 functions and explains its operating features. A detailed description of each function block is provided in the paragraphs under the heading of *DGC-500 Function Blocks*.

DGC-500 operating features are described under the heading of *Software Operation*.

DGC-500 FUNCTION BLOCKS

To ease understanding, DGC-500 functions are illustrated in the block diagram of Figure 3-1. The following paragraphs describe each function in detail.

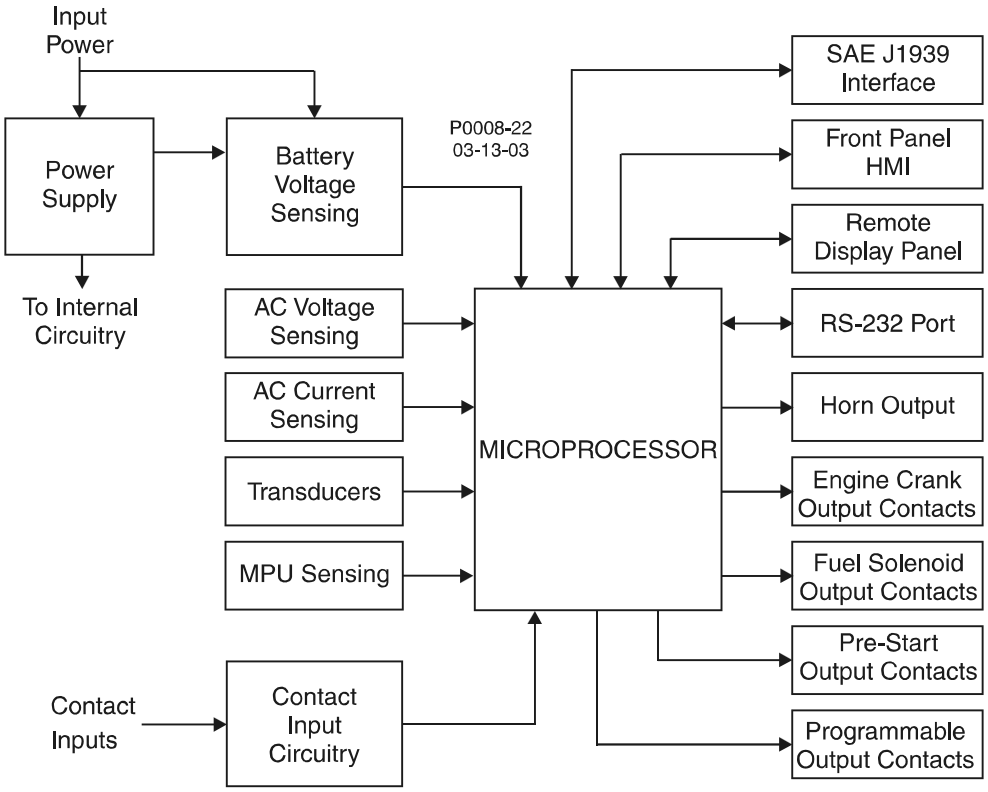

Figure 3-1. DGC-500 Function Block Diagram

Power Supply

The internal, switch-mode power supply uses the applied battery voltage to generate operating power for the internal circuitry of the DGC-500. The power supply accepts a nominal battery voltage of 12 or 24 Vdc and has an operating range of 8 to 32 Vdc. Battery voltage is applied to terminals P20 (+) and P21 (–).

Battery Voltage Sensing

Voltage applied to the power supply is filtered and reduced to a suitable level for sensing by the microprocessor.

Microprocessor

The microprocessor controls the overall functionality of the DGC-500 and makes decisions based on programming and system inputs.

Katolight Service - Master Repair Manual - Page 1838

Circuits relating to the microprocessor inputs are described in the following paragraphs.

Zero Crossing Detection

The zero crossing of A-phase to B-phase line voltage is detected and used to calculate the generator frequency.

Analog-to-Digital Converter

Scaled and conditioned signals representing the sensing voltage, sensing current, coolant temperature, fuel level, oil pressure, and battery voltage are digitized by the microprocessor's 10-bit analog-to-digital converter. The digitized information is stored in random access memory (RAM) and used by the microprocessor for all metering and protection functions.

Voltage Sensing Inputs

Generator voltages applied to the voltage sensing inputs are scaled to levels suitable for use by the internal circuitry. Voltage sensing configuration is menu-selectable.

The voltage sensing inputs accept a maximum voltage of 576 Vrms, line-to-line. Sensing voltage is applied to terminals P23 (A-phase), P26 (B-phase), P29 (C-phase), and P30 (Neutral).

Current Sensing Inputs

Generator currents are sensed and scaled to values suitable for use by the internal circuitry. Isolation is provided by internal current transformers (CTs).

DGC-500–X1 units accept a maximum current value of 1 Aac. DGC-500–X5 units accept a maximum current value of 5 Aac. Sensing current is applied to terminals P10 and P11 (A-phase), P12 and P14 (B-phase), and P15 and P17 (C-phase).

Transducer Inputs

Programmable transducer inputs of the give the DGC-500 user the flexibility to select the transducer to be used in an application. Information about programming the transducer inputs is provided in Section 6, *BESTCOMS Software*.

Oil Pressure

A current of less than 30 milliamperes is provided to the oil pressure transducer. The developed voltage is measured and scaled for use by the internal circuitry. Oil pressure transducers that are compatible with the DGC-500 include Isspro model R8919, Stewart-Warner models 279BF, 279C, 411K, and 411M, and VDO models 360025 and 360811. Other senders may be used. BESTCOMS software allows for the programming of sender characteristics. See Section 4, *BESTCOMS Software* for more information.

Oil pressure transducer connections are provided at terminals P13 and P19 (sender common).

Coolant Temperature

A current of less than 1.2 milliamperes is provided to the coolant temperature transducer. The developed voltage is measured and scaled for use by the internal circuitry. Coolant temperature transducers that are compatible with the DGC-500 include Isspro model R8959 and Stewart-Warner 334-P. Other senders may be used. BESTCOMS software allows for the programming of sender characteristics. See Section 4, *BESTCOMS Software* for more information.

Coolant temperature transducer connections are provided at terminals P18 and P19 (sender common).

Fuel Level

A current of less than 5 milliamperes is provided to the fuel level transducer. The developed voltage is measured and scaled for use by the internal circuitry. An open circuit or short circuit across the fuel level transducer terminals will cause the DGC-500 to indicate a failed fuel level transducer. Fuel level transducers that are compatible with the DGC-500 include Isspro model R8925. Other senders may be used. BESTCOMS

software allows for the programming of sender characteristics. See Section 4, *BESTCOMS Software* for more information.

Fuel level transducer connections are provided at terminals P16 and P19 (sender common).

Speed Signal Inputs

The DGC-500 uses signals from the voltage sensing inputs and magnetic pickup input to detect machine speed.

Voltage Sensing Inputs

Generator voltage applied to the DGC-500 voltage sensing inputs is used to measure frequency and can be used to measure machine speed.

Sensing voltage is applied to terminals P23 (A-phase), P26 (B-phase), P29 (C-phase), and P30 (Neutral).

Magnetic Pickup Input

The voltage received from the magnetic pickup is scaled and conditioned for use by the internal circuitry as a speed signal source.

Magnetic pickup connections are provided at terminals P39 (+) and P40 (–).

Contact Input Circuitry

The DGC-500 has four contact sensing inputs: Emergency Stop and three programmable inputs.

Emergency Stop Input

This input accepts Form A, dry contacts. An open circuit at this continuously monitored input initiates an emergency stop. An emergency stop removes operating power from all DGC-500 output relays.

Emergency stop contact connections are provided at terminals P35 and P37.

Programmable Inputs

Each programmable input (PROG INPUT1, PROG INPUT2, and PROG INPUT3) can be independently configured as an auto transfer switch input, single-phase override input, low coolant level input, fuel leak detection input, battery charger failure input, or an auxiliary input. By default, each programmable input is disabled.

The programmable inputs accept normally open, Form A contacts. A contact is connected between a programmable input and the negative side of the battery voltage. Through BESTCOMS software, each programmable contact input can be assigned a name (eight characters, maximum) and configured as an alarm input, a pre-alarm input, or neither. The default names for the inputs are AUX IN 1, AUX IN 2, and AUX IN 3. When a programmable contact input is closed, the front panel display shows the name of the closed input if it was programmed as an alarm or pre-alarm input. Alarm inputs are annunciated through the Normal display mode screens of the front panel. Pre-alarm inputs are annunciated through the Alternate display mode screens of the front panel. If neither is programmed, no indication is given. Programming an input as neither is useful when a programmable input is used to close one of the DGC-500's programmable outputs.

Connections for the programmable inputs are provided at terminals P2 (PROG INPUT1), P3 (PROG INPUT2), and P4 (PROG INPUT3). The negative side of the battery voltage (terminal P21) serves as the return connection for the programmable inputs.

Front Panel HMI

The front panel HMI provides a convenient interface for viewing system parameters and for controlling the DGC-500 and generator operation. Front panel HMI components include an LCD (liquid crystal display), LEDS (light emitting diodes), and pushbuttons.

LCD

The backlit LCD provides metering, pre-alarm, and alarm information. Detailed information about the LCD is provided in the *Software Operation* sub-section.

LEDs

The LEDs indicate pre-alarm and alarm conditions along with DGC-500 status and generator status.

Pushbuttons

The pushbuttons are used to scroll through and select parameters displayed on the LCD, change setpoints, start and stop the generator, and reset alarms.

Remote Display Panel

Applications that require remote annunciation can use Basler Electric's Remote Display Panel, RDP-110. Using the RDP-110 with the DGC-500 meets the requirements of NFPA Standard 110. The RDP-110 uses a standard, two-terminal RS-485 interface to communicate with the DGC-500 and receives operating power from the DGC-500. Remote indication of many pre-alarm and alarm conditions is provided by the RDP-110.

The following pre-alarm conditions are indicated by LEDs on the RDP-110 front panel.

- Low coolant temperature
- High coolant temperature
- Low oil pressure
- Low fuel level
- Weak battery
- Battery overvoltage
- Battery charger failure

The following alarm conditions are indicated by LEDs and an audible alarm on the RDP-110 front panel.

- Low coolant level
- High coolant temperature
- Low oil pressure
- Overcrank
- Overspeed
- Emergency stop
- Fuel leak/fuel level sender failure
- Engine sender unit failure

Additionally, the RDP-110 indicates when the DGC-500 is not operating in Auto mode and when the generator is supplying load.

For more information about the RDP-110, request Basler Product Bulletin SNE-2.

RS-232 Communication Port

The communication port, located on the rear panel, consists of an optically isolated female DB-9 connector. The RS-232 connector serves as a communication interface for enhances DGC-500 setup. Communication requires a standard 9-pin serial communication cable connected between the RS-232 communication port and a PC operating with BESTCOMS-DGC500-32. BESTCOMS is a Windows® based communication software package that is supplied with the DGC-500. A detailed description of BESTCOMS is provided in Section 4, *BESTCOMS Software for Windows®* .

SAE J1939 Interface (Optional)

A Controller Area Network (CAN) is a standard interface that allows communication between multiple controllers on a common network using a standard message protocol. DGC-500 controllers with a style number of XXJX have a CAN interface that supports the SAE J1939 message protocol.

Applications using an engine-driven generator set controlled by a DGC-500 may also have an Engine Control Unit (ECU). The CAN interface allows the ECU and DGC-500 to communicate. The ECU reports operating information to the DGC-500 through the CAN interface. Operating parameters and diagnostic information, if supported by the ECU, are decoded and displayed for monitoring.

The primary use of the CAN interface is to obtain engine operating parameters for monitoring speed, coolant temperature, oil pressure, coolant level, and engine hours without the need for direct connection to individual senders. Table 3-1 lists the ECU parameters and Table 3-2 lists the engine configuration parameters supported by the DGC-500 CAN interface. These parameters are transmitted via the CAN interface at preset intervals. The columns labeled *Update Rate* show the parameter transmission rates. This information can also be transmitted upon user request.

Table 3-1. ECU Parameters Obtained from CAN Interface

ECU Parameter	Metric Units	English Units	Update Rate	Decimal Place	✳ SPN
Throttle (accelerator pedal) position	%	%	50 ms	10th	91
Percent load at current rpm	%	%	50 ms	none	92
Actual engine percent torque	%	%	engine speed dependent	none	513
Engine speed	rpm	rpm	engine speed dependent	none	190
Injection control pressure	MPa	psi	500 ms	none	164
Injector Metering Rail Pressure	Mpa	psi	500 ms	none	157
Total engine hours	hours	hours	requested 1.5 s	100th	247
Trip fuel	liters	gallons	requested 1.5 s	none	182
Total fuel used	liters	gallons	requested 1.5 s	none	250
Engine coolant temperature	°C	°F	1 s	none	110
Fuel temperature	°C	°F	1 s	none	174
Engine oil temperature	°C	°F	1 s	10th	175
Engine intercooler temperature	°C	°F	1 s	none	52
Fuel delivery pressure	kPa	psi	500 ms	10th	94
Engine oil level	%	%	500 ms	10th	98
Engine oil pressure	kPa	psi	500 ms	10th	100
Coolant pressure	kPa	psi	500 ms	10th	109
Coolant level	%	%	500 ms	10th	111
Fuel rate	liter/hr	gal/hr	100 ms	100th	183
Barometric pressure	kPa	psi	1 s	10th	108
Ambient air temperature	°C	°F	1 s	10th	171
Air inlet temperature	°C	°F	1 s	none	172
Boost pressure	kPa	psi	500 ms	none	102
Intake manifold temperature	°C	°F	500 ms	none	105
Air filter differential pressure	kPa	psi	500 ms	100th	107
Exhaust gas temperature	°C	°F	500 ms	10th	173
Battery voltage	Vdc	Vdc	1 s	10th	168
Switched battery voltage (at ECU)	Vdc	Vdc	1 s	10th	158

✳ SPN is Suspect Parameter Number

Table 3-2. Engine Configuration Parameters Obtained from CAN Interface

✳ Engine Configuration Parameter	Metric Units	English Units	Update Rate	Decimal Place	SPN
Engine speed at idle point 1	rpm	rpm	5 s	none	188
Percent torque at idle point 1	%	%	5 s	none	539
Engine speed at point 2	rpm	rpm	5 s	none	528
Percent torque at point 2	%	%	5 s	none	540
Engine speed at point 3	rpm	rpm	5 s	none	529
Percent torque at point 3	%	%	5 s	none	541
Engine speed at point 4	rpm	rpm	5 s	none	530
Percent torque at point 4	%	%	5 s	none	542
Engine speed at point 5	rpm	rpm	5 s	none	531
Percent torque at point 5	%	%	5 s	none	543
Engine speed at high idle point 6	rpm	rpm	5 s	none	532
Gain (KP) of endspeed governor	%/rpm	%/rpm	5 s	100th	545
Reference engine torque	Nm	ft-lb	5 s	none	544
Maximum momentary engine override speed point 7	rpm	rpm	5 s	none	533
Maximum momentary engine override time limit	seconds	seconds	5 s	10th	534
Requested speed control range lower limit	rpm	rpm	5 s	none	535
Requested speed control range upper limit	rpm	rpm	5 s	none	536
Requested torque control range lower limit	%	%	5 s	none	537
Requested torque control range upper limit	%	%	5 s	none	538

✳ Press the Select pushbutton to enter the Engine Configuration submenu. Press the Previous pushbutton to exit the submenu.

CAUTION

When the CAN interface is enabled, the DGC-500 will ignore the following sender inputs: oil pressure, coolant temperature, and magnetic pickup.

Diagnostic Trouble Codes (DTCs)

The DGC-500 obtains the diagnostic condition of the transmitting electronic components. The DGC-500 will receive an unsolicited message of a currently active diagnostic trouble code (DTC). Previously active DTCs are available upon request. Active and previously active DTCs can be cleared on request. Table 3-3 lists the diagnostic information that the DGC-500 obtains over the CAN interface.

Katolight Service - Master Repair Manual - Page 1843

Table 3-3. Diagnostic Information Obtained Over the CAN Interface

Parameter	Transmission Repetition Rate
Active diagnostic trouble code	1 s
Lamp status	1 s
Previously active diagnostic trouble code	on request
Request to clear previously active DTCs	on request
Request to clear active DTCs	on request

DTCs are reported in coded diagnostic information that includes the Suspect Parameter Number (SPN), Failure Mode Identifier (FMI), and Occurrence Count (OC). All parameters have an SPN and are used to display or identify the items for which diagnostics are being reported. The FMI defines the type of failure detected in the subsystem identified by an SPN. The reported problem may not be an electrical failure but a subsystem condition needing to be reported to an operator or technician. The OC contains the number of times that a fault has gone from active to previously active.

Horn Output

This output connects to a user-supplied audible signal device. A change in operating status or an alarm condition energizes the horn output continuously and a pre-alarm condition pulses the horn output on and off. The annunciation continues until the condition subsides or until the front-panel Alarm Silence pushbutton is pressed.

The horn output supplies 15 mAdc maximum at the lesser of 24 Vdc or the battery voltage level. A horn compatible with the DGC-500 is available from Basler Electric as part number 29760. Horn output connections are located at terminals P24 (+) and P25 (–).

Output Contacts

All output contacts are electrically isolated from each other and from the DGC-500 internal circuitry. Output contact operation is controlled by the operating mode of the DGC-500 and the system. The output contacts are also affected by the status of the Emergency Stop contact input. When the Emergency Stop contact input is open (emergency stop condition), all output contacts open. When the Emergency Stop contact input is closed, all output contacts operate normally.

Five output contacts are available: Pre-Start, Engine Crank, Fuel Solenoid, and two Programmable output contacts.

Pre-Start

This output closes to energize the engine glow plugs. The Pre-Start output can be programmed to close up to 30 seconds prior to engine cranking. The Pre-Start output can also be programmed to open upon engine startup or remain closed as long as the engine is operating.

Crank

This output closes when engine cranking is initiated by the DGC-500. The length of time that the contacts remain closed is determined by the cranking style selected (either continuous or cycle). Cranking continues until the magnetic pickup or generator frequency indicates that the engine has started.

Fuel

This output closes when engine cranking is initiated by the DGC-500. The Fuel output remains closed until an off command is issued and the engine stops.

Katolight Service - Master Repair Manual - Page 1844

Programmable

Two programmable outputs (PROGRAM OUTPUT1, 2) can be user-configured to close for a variety of conditions.

Either programmable output can be programmed to close during any of the following operating conditions.

- Cooldown timer active
- EPS supplying load
- Pre-start condition in effect
- Switch not in Auto
- Programmable Input 1 closed
- Programmable Input 2 closed
- Programmable Input 3 closed

Either of the programmable outputs can be configured to give a pre-alarm indication by closing during any of the following pre-alarm conditions.

- Battery charger failure
- Battery overvoltage
- Fuel leak
- Fuel leak/sender failure
- High coolant temperature
- Low battery voltage
- Low coolant level
- Low coolant temperature
- Low fuel
- Low oil pressure
- Scheduled maintenance due
- Weak battery voltage

Either of the programmable outputs can be configured to give an alarm indication by closing during any of the following alarm conditions.

- Battery charger
- Coolant temperature sender failure
- Emergency stop
- Fuel leak
- High coolant temperature
- Loss of voltage sender failure
- Low coolant level
- Low fuel
- Low oil pressure
- MPU speed sender failure
- Oil pressure sender failure
- Overcrank
- Overspeed

SOFTWARE OPERATION

Embedded software controls all aspects of DGC-500 operation. DGC-500 software controls power-up initiation, HMI configuration, engine cranking, contact input monitoring, fault detection and annunciation, system parameter monitoring, output contact control, and communication.

Power-Up Sequence

When battery power is applied, the DGC-500 initiates a power-up sequence. During power-up, DGC-500 memory is checked and the LCD displays the embedded software version followed by a prompt to set the real-time clock. Then, all configuration data stored in nonvolatile EEPROM (electronically erasable programmable read-only memory) is brought into main memory and the DGC-500 begins operating in Normal mode. When operating in Normal mode, all enabled functions are active and all inputs are monitored.

NOTE

The run-time counter and maintenance timer values are updated in volatile memory once per minute. Updated values are saved to nonvolatile memory when the Auto/Off/Run mode of operation is changed. Additionally, while the engine is running, the run-time counter value is saved to nonvolatile memory every 15 minutes. If the battery power source fails during DGC-500 operation, these values are not updated and the changes made after the last save operation to nonvolatile memory are irretrievably lost.

Cranking

The DGC-500 can be programmed for either continuous engine cranking or cycle engine cranking.

Continuous Cranking

If desired, engine cranking can be delayed from zero to 30 seconds after initiating engine startup. When continuous engine cranking is initiated, cranking is sustained for a user-adjustable period of one to 60 seconds. A crank disconnect limit setting (10 to 100% of nominal engine speed) selects the desired engine speed above which cranking is terminated.

Cycle Cranking

If desired, engine cranking can be delayed from zero to 30 seconds after initiating engine startup. When cycle engine cranking is initiated, five to 15 seconds of cranking is followed by an equal number of seconds of rest. A maximum of seven cranking cycles (five cycles for NFPA compliant units) are allowed by the DGC-500. A crank disconnect limit setting (10 to 100% of nominal engine speed) selects the desired engine speed above which cranking is terminated.

Pre-Alarms

A pre-alarm is annunciated when a condition programmed to trigger a pre-alarm is met. When a pre-alarm condition exists, the front panel Alarm indicator flashes on and off and the Horn output (if enabled through BESTCOMS) alternates between an energized and de-energized state. The audible alarm is reset by pressing the front panel Alarm Silence pushbutton.

Active pre-alarms for oil pressure, fuel level, coolant temperature, and battery voltage are displayed on the main display of the LCD. The LCD annunciates an active pre-alarm by alternating between the current parameter value and a blacked-out field for that value. All other pre-alarms are displayed in sequence through the alternate mode display.

Each DGC-500 pre-alarm is described in the following paragraphs.

Low Oil Pressure

A low oil pressure pre-alarm occurs when the engine oil pressure decreases below the setpoint programmed in BESTCOMS. The low oil pressure pre-alarm has a setting range of 3 to 150 psi or 20 to 1,035 kPa. A 10 second activation time delay prevents low oil pressure annunciation during engine startup.

Low Fuel

A low fuel pre-alarm occurs when the fuel level decreases below the setpoint programmed in BESTCOMS. The low fuel pre-alarm has a setting range of 10 to 100 percent.

High Coolant Temperature

A high coolant temperature pre-alarm occurs when the engine coolant temperature exceeds the setpoint programmed in BESTCOMS. The high coolant temperature pre-alarm has a setting range of 100 to 280°F or 38 to 138°C. A 60 second activation time delay prevents high coolant temperature annunciation during system startup.

Low Coolant Temperature

A low coolant temperature pre-alarm occurs when the engine coolant temperature decreases below the setpoint programmed in BESTCOMS. The low coolant temperature pre-alarm has a setting range of 50 to 100°F or 10 to 38°C.

Battery Overvoltage

A battery overvoltage pre-alarm occurs when the battery overvoltage pre-alarm function is enabled in BESTCOMS and the battery voltage level exceeds 30 Vdc for 24 Vdc system or 15 Vdc for 12 Vdc systems.

Low Battery Voltage

A low battery voltage pre-alarm occurs when the battery voltage decreases below the low battery voltage setpoint for the duration of the low battery voltage time delay setting. Both settings are made in BESTCOMS. The low battery voltage setpoint has a setting range of 12 to 24 Vdc for 24 Vdc systems and 6 to 12 Vdc for 12 Vdc systems. The low battery voltage time delay has a setting range of 1 to 10 seconds.

Weak Battery Voltage

A weak battery voltage pre-alarm occurs when the battery voltage decreases below the weak battery voltage setpoint for the duration of the weak battery voltage time delay setting. Both settings are made in BESTCOMS. The weak battery voltage setpoint has a setting range of 8 to 16 Vdc for 24 Vdc systems and 4 to 8 Vdc for 12 Vdc systems. The weak battery voltage time delay has a setting range of 1 to 10 seconds.

Maintenance Interval

A maintenance interval pre-alarm occurs when the DGC-500 maintenance timer counts down to zero from the maintenance interval setting programmed in BESTCOMS. The maintenance interval duration has a setting range of zero to 5,000 hours.

Battery Charger Failure

A battery charger failure pre-alarm occurs when one of the three DGC-500 programmable contact inputs detects a contact closure due to a battery charger failure. In order for a battery charger failure pre-alarm to occur, the battery charger failure pre-alarm function must be enabled in BESTCOMS and one of the three programmable inputs must be programmed as a battery charger failure pre-alarm input. Refer to Section 4, *BESTCOMS Software* for information about configuring the programmable contact inputs.

Fuel Level Sender Failure

A fuel level sender failure pre-alarm occurs when an open circuit or short circuit is detected across the DGC-500 fuel level transducer terminals and a fuel level sender failure is programmed in BESTCOMS to cause a pre-alarm.

MPU Failure

An MPU (magnetic pickup) failure pre-alarm occurs when MPU-GEN is selected as the generator speed signal source, the MPU signal is lost, and the Global Sender Failure Alarm time delay expires.

Active DTC

When CAN and DTC support are both enabled, an “active DTC” pre-alarm may be enabled (through BESTCOMS) to announce the presence of an condition that is causing a DTC to be sent from the ECU to the DGC-500.

CAN Failure

A CAN failure annunciation may be enabled only when the CAN interface is enabled. The CAN interface is enabled through BESTCOMS. When configured to alarm, annunciation occurs when CAN communication stops due to a lost connection between the DGC-500 and ECU, or an ECU malfunction. If CAN communication is lost and the annunciation is a pre-alarm, a screen stating the pre-alarm will appear in the Alternate Display menu. This screen will be viewable only when the pre-alarm is active.

Audible Alarm

A pre-alarm is annunciated through the DGC-500 Horn output when the audible alarm feature is enabled in BESTCOMS. When the audible alarm is enabled, a pre-alarm condition causes the horn output to alternate between an energized and de-energized state.

Alarms

An alarm is annunciated when a condition programmed to trigger an alarm is detected. When an alarm condition exists, the front panel Alarm indicator lights, the Horn output energizes, and the cause of the alarm is displayed on the LCD.

An alarm condition stops the engine by opening the Fuel output contact.

Each DGC-500 alarm is described in the following paragraphs.

Low Oil Pressure

A low oil pressure alarm occurs when the engine oil pressure decreases below the low oil pressure alarm setpoint for the duration of the low oil pressure time delay setting. Both settings are made in BESTCOMS. When a low oil pressure alarm occurs, the LCD indicates LOW OIL PRESSURE and the current low oil pressure alarm setting. A 10 second activation time delay prevents low oil pressure annunciation during engine startup.

The low oil pressure setpoint has a setting range of 3 to 150 psi or 20 to 1,035 kPa and the low oil pressure time delay has a setting range of 5 to 15 seconds.

Low Fuel Level

A low fuel level alarm occurs when the fuel level decreases below the setpoint programmed in BESTCOMS. When a low fuel level alarm occurs, the LCD indicates LOW FUEL LEVEL and the current low fuel level alarm setting.

The low fuel level setpoint has a setting range of zero to 100 percent.

High Coolant Temperature

A high coolant temperature alarm occurs when the coolant temperature exceeds the setpoint programmed in BESTCOMS. When a high coolant temperature alarm occurs, the LCD indicates HIGH COOLANT TEMP and the current high coolant temperature setting. A 60 second activation time delay prevents high coolant temperature annunciation during system startup.

The high coolant temperature setpoint has a setting range of 100 to 280°F or 38 to 138°C.

Overspeed

An overspeed alarm occurs when the engine speed exceeds the overspeed setpoint for the duration of the overspeed time delay. Both settings are made in BESTCOMS. When an overspeed alarm occurs, the LCD indicates OVERSPEED and the current overspeed setting.

The overspeed setpoint has a setting range of 105 to 140 percent and the overspeed time delay has a setting range of zero to 500 milliseconds.

Loss of Generator Voltage

A loss of generator voltage alarm can occur only when the loss of generator voltage alarm is enabled in BESTCOMS. When the sensed generator voltage decreases below 1.5 Vac for the duration of the global sender failure alarm time delay, a loss of generator voltage alarm occurs. The global sender failure alarm time delay is adjustable from 1 to 10 seconds.

Oil Pressure Sender Failure

An oil pressure sender failure alarm occurs when the DGC-500 oil pressure transducer input senses a sender failure for the duration of the global sender failure alarm time delay. The oil pressure sender failure alarm is enabled and the global sender failure alarm time delay is set in BESTCOMS.

Coolant Temperature Sender Failure

A coolant temperature sender failure alarm occurs when the DGC-500 coolant temperature transducer input senses a sender failure for the duration of the coolant temperature alarm delay time. The coolant temperature sender failure alarm is enabled and the coolant temperature alarm delay is set in BESTCOMS. The coolant temperature alarm delay is adjustable from 5 to 30 minutes in 5 minute increments.

Speed Source Failure

A speed source failure can occur for either of two conditions. If MPU (magnetic pickup) is selected as the generator speed signal source and the MPU signal is lost, a speed source failure alarm will occur. If GEN FREQ (generator frequency) is selected as the generator speed signal source and a loss of generator frequency is detected, a speed source failure alarm will occur.

CAN Failure (If Equipped)

A CAN failure annunciation may be enabled only when the CAN interface is enabled. The CAN interface is enabled through BESTCOMS. When configured to pre-alarm, annunciation occurs when CAN communication stops due to a lost connection between the DGC-500 and ECU, or an ECU malfunction. If CAN communication is lost and the annunciation is configured as an alarm, then a normal alarm sequence will occur, including a CANBUS FAILURE message that appears on the HMI display.

Real-Time Clock

The real-time clock supplies time and date information to the event log for the time stamping of events.

Clock data is held in volatile memory; clock settings are lost when DGC-500 operating power is removed. When DGC-500 operating power is restored, the DGC-500 prompts the user to set the real-time clock.

The DGC-500 keeps time in 24-hour mode and uses the HH:MM:SS format. The date format is MM/DD/YYYY. Adjustment for daylight saving time can be enabled or disabled. Clock settings may be viewed and entered in BESTCOMS or at the front panel HMI.

Generator Run Statistics

The DGC-500 compiles statistics for both individual generator run sessions and the cumulative total of all generator run sessions. Generator run statistics are stored in DGC-500 nonvolatile memory and displayed on the Run Statistics screen of BESTCOMS. When the DGC-500 and/or genset are commissioned, a date is entered for the DGC-500 to use as a starting point for tracking generator run statistics. The logs for session run and cumulative run statistics track loaded run hours, unloaded run hours, and total run hours. Additionally, the cumulative run statistics log tracks the number of engine starts and the number of hours remaining until scheduled maintenance.

Event Log

The event log maintains a history of system events in DGC-500 nonvolatile memory and displays the event record on the Event Log screen in BESTCOMS. System events are categorized by the event log into event types. The event log capacity is 30 event types.

Each event type in the log contains an event identifier label, the number of occurrences for the event, and the time stamp of the most recent event occurrence. The time stamp displayed is user-selectable and can be real-time clock data or the elapsed engine hours.

When an event type is logged, it occupies one entry (or row) in the log. If the same event type is logged again, it still only occupies one entry in the log. However, the log entry is updated with the number of occurrences and the Last Date/Time column is updated with the time stamp of the last occurrence.

If the event log contains the maximum of 30 event types and a new event type is logged, the oldest event type in the log is overwritten with the new event type.

The event types monitored by the event log are listed below.

- Active DTC exists pre-alarm
- Auto Start contact closed
- Auxiliary input 1 closed
- Auxiliary input 2 closed
- Auxiliary input 3 closed
- Battery charger failure pre-alarm
- Battery overvoltage pre-alarm
- CAN Bus Failure pre-alarm
- CAN Bus failure alarm
- Coolant level sender failure
- Coolant temperature sender failure alarm
- DGC-500 protective shutdown
- EE memory checksum error
- Emergency stop alarm
- Engine started
- Flash checksum error
- Fuel leak/sender failure pre-alarm
- Generator phase imbalance detected
- Generator overvoltage detected
- Generator undervoltage detected
- Generator overcurrent detected
- Generator underfrequency detected
- Generator overfrequency detected
- High coolant temperature pre-alarm
- High coolant temperature alarm
- Loss of voltage sender failure alarm
- Low coolant level pre-alarm
- Low fuel alarm

- Low coolant level alarm
- Low oil pressure alarm
- Low battery voltage pre-alarm
- Low oil pressure pre-alarm
- Low coolant temperature pre-alarm
- Low fuel pre-alarm
- MPU speed sender failure alarm
- Normal engine shutdown
- Oil pressure sender failure alarm
- Overcrank alarm
- Overspeed alarm
- Scheduled maintenance pre-alarm
- Unknown shutdown (with ECU enabled, engine stops without input from the DGC)
- Weak battery voltage pre-alarm

Generator Protection

Multifunction generator protection is provided on DGC-500 controller with style number XXX1. The DGC-500 can protect a generator against overvoltage, undervoltage, overfrequency, underfrequency, overcurrent, and phase imbalance.

Overvoltage (59)

Two sets of overvoltage settings are provided: one for three-phase generator connections and one for single-phase generator connections.

When the average of the three phase voltages (three-phase mode) or the average of the line-to-line voltage (single-phase mode) increases above the corresponding 59 pickup setting for the duration of the corresponding 59 time delay, an overvoltage condition is annunciated. Both overvoltage pickup settings have a range of 70 to 576 Vac and both overvoltage time delay settings have a range of 0 to 30 seconds.

An overvoltage annunciation can be user-selected to trigger a pre-alarm (warning) or alarm (shutdown). An overvoltage annunciation can also be user-configured to close one or both of the programmable outputs.

When a Single-Phase Override contact input is received, the DGC-500 automatically switches from the three-phase overvoltage settings to the single-phase overvoltage settings.

Undervoltage (27)

Two sets of undervoltage settings are provided: one for three-phase generator connections and one for single-phase generator connections.

When the average of the three-phase voltage (three-phase mode) or the average of the line-to-line voltage (single-phase mode) decreases below the corresponding 27 pickup setting for the duration of the corresponding 27 time delay, an undervoltage condition is annunciated. Both undervoltage pickup settings have a range of 70 to 576 Vac and both undervoltage time delay settings have a range of 0 to 30 seconds.

A frequency-based inhibit setting prevents a 27 trip from occurring during an underfrequency condition associated with system startup. The frequency-based inhibit function has a setting range of 20 to 400 hertz.

An undervoltage annunciation can be user-selected to trigger a pre-alarm (warning) or alarm (shutdown). An undervoltage annunciation can also be user-configured to close one or both of the programmable outputs.

When a Single-Phase Override contact input is received, the DGC-500 automatically switches from the three-phase undervoltage settings to the single-phase undervoltage settings.

Frequency (81)

Two sets of frequency settings are provided: one for underfrequency (81U) protection and one for overfrequency (81O) protection.

When the generator frequency decreases below the 81U pickup setting for the duration of the 81U time delay, an underfrequency condition is annunciated. When the generator frequency increases above the 81O pickup setting for the duration of the 81O time delay, an overfrequency condition is annunciated. For 50/60 hertz sensing, the 81U and 81O functions have a setting range of 45 to 65 hertz. For 400 hertz sensing, the 81U and 81O functions have a setting range of 360 to 440 hertz. The time delay for the 81U and 81O functions has a setting range of 0 to 30 seconds.

A voltage-based inhibit setting prevents an 81U trip from occurring during an undervoltage condition associated with system startup. The voltage-based inhibit function has a setting range of 70 to 576 Vac.

Underfrequency and overfrequency conditions can be user-selected to trigger a pre-alarm (warning) or alarm (shutdown). An underfrequency and/or overfrequency condition can also be user-configured to close one or both of the programmable outputs.

Overcurrent (51)

Two sets of overcurrent settings are provided: one for three-phase generator connections and one for single-phase generator connections.

When any of the phase currents increase above the 51 pickup setting for the duration of the 51 time delay, an overcurrent conditions is annunciated. Controllers with 1 A current sensing (style X1XX) have an overcurrent pickup range of 0.18 to 1.18 Aac. Controllers with 5 A current sensing (style X5XX) have an overcurrent pickup range of 0.9 to 7.75 Aac. The overcurrent time delay is controlled by a curve setting and time dial setting. The curve setting can be set at F, Fixed, or one of 16 inverse timing characteristic curves can be selected. When the F, Fixed curve setting is selected, the time dial setting (adjustable from 0 to 30 seconds) determines the overcurrent time delay with no regard to the generator current level. When one of the 16 inverse timing characteristics curves are selected, the time dial setting (adjustable from a multiplier of 0 to 9.9) along with the level of measured generator current determines the overcurrent time delay.

The available characteristic curves are listed below and illustrated in Appendix A, Time Overcurrent Characteristic Curves.

- S1, Short Inverse
- S2, Short Inverse
- L1, Long Inverse
- L2, Long Inverse
- D, Definite
- M, Moderately Inverse
- I1, Inverse
- I2, Inverse
- V1, Very Inverse
- V2, Very Inverse
- E1, Extremely Inverse
- E2, Extremely Inverse
- A, Standard Inverse
- B, Very Inverse
- C, Extremely Inverse
- G, Long Inverse

An overcurrent annunciation can be user-selected to trigger a pre-alarm (warning) or alarm (shutdown). An overcurrent annunciation can also be user-configured to close one or both of the programmable outputs.

When a Single-Phase Override contact input is received by the DGC-500, the overcurrent pickup setting automatically switches from the three-phase overcurrent setting to the single-phase overcurrent setting.

Phase Imbalance (47)

When the difference between any of the three phases of generator voltage increases above the 47 pickup setting for the duration of the 47 time delay, a phase imbalance condition is annunciated. The phase imbalance pickup setting has a range of 5 to 100 Vac and the phase imbalance time delay setting has a range of 0 to 30 seconds. A phase imbalance annunciation can be user-selected to trigger a pre-alarm (warning) or alarm (shutdown). A phase imbalance annunciation can also be user-configured to close one or both of the programmable outputs.

DISPLAY OPERATION

The DGC-500 has three standard display modes: Normal, Alternate, and Menu. The optional ECU Parameters mode is present only on controllers with a style number of XXJX. Pressing the **Display Toggle** pushbutton scrolls through the active screen of each available display mode. Figure 3-2 illustrates the top-level screen of the standard and optional display modes.

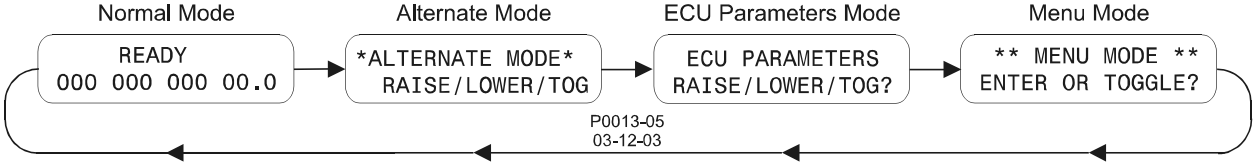

Figure 3-2. Display Mode Navigation

Normal Mode

Normal mode displays various engine and generator parameters. Each parameter is displayed adjacent to the corresponding label on the front panel overlay.

Firmware Version

Normal mode also displays the firmware version of the DGC-500.

The DGC-500 firmware version is viewed in Normal mode by pressing and holding either the **Raise/Scroll** pushbutton or **Lower/Scroll** pushbutton. Releasing either pushbutton returns the display to the current Normal mode screen.

Alternate Mode

Press the **Raise/Scroll** or **Lower/Scroll** pushbuttons while viewing the top-level Alternate mode screen (Figure 3-2) to scroll through the available engine and generator metering values. Figure 3-3 illustrates the Alternate mode screens for a DGC-500 configured for three-phase, line-to-neutral operation. Units configured for three-phase, line-to-line operation do not display the GEN A-N VOLTS, GEN B-N VOLTS, and GEN C-N VOLTS screens. Units configured for single-phase, A-phase to B-phase operation do not display the GEN B-C VOLTS, GEN C-A VOLTS, and GEN C-N VOLTS screens.

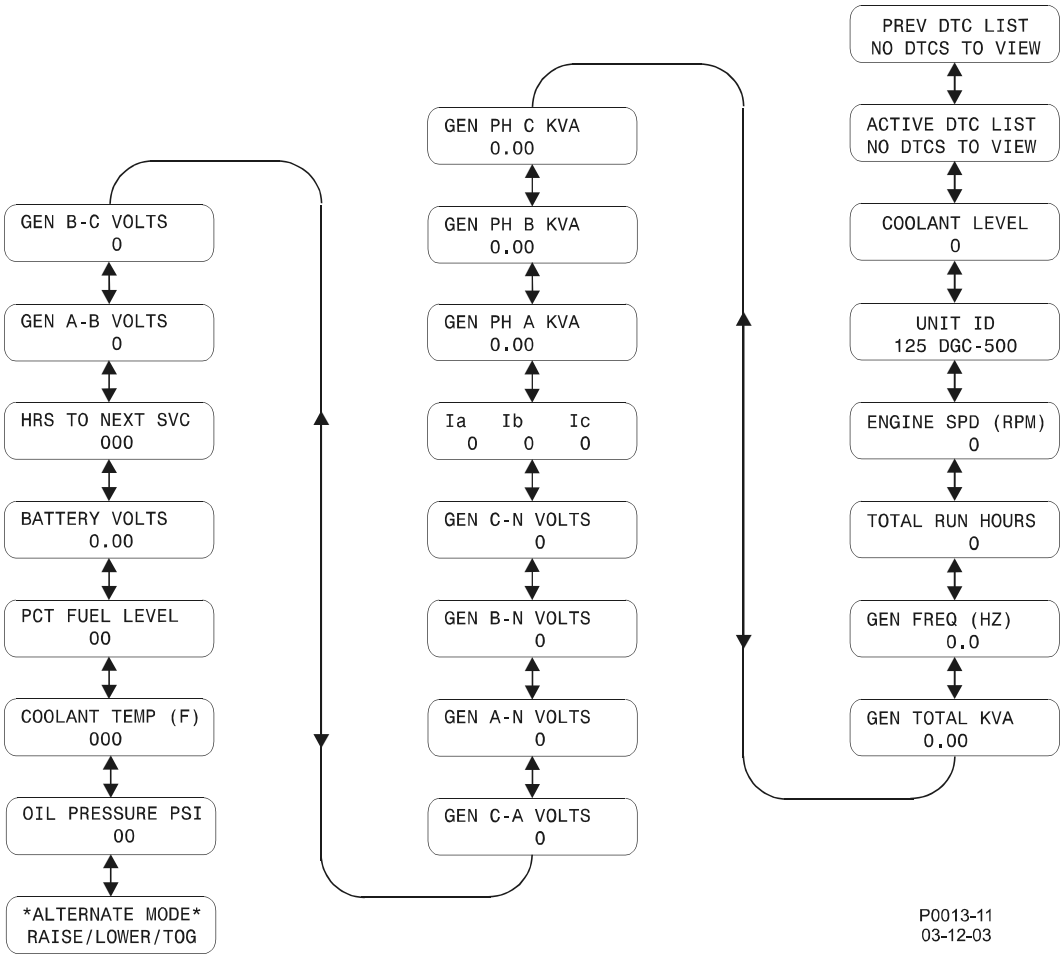

Figure 3-3. Alternate Mode Navigation

Diagnostic Trouble Codes (DTCs)

When the optional SAE J1939 communication is enabled, access to the Diagnostic Trouble Codes (DTCs) is available through the Alternate Display mode. The DTCs are the last two screens in the Alternate mode display list.

If there are no DTCs to be sent to the DGC-500, pressing the **Select/Enter** pushbutton will have no effect, and the messages ACTIVE DTC LIST and NO DTCS TO VIEW will be displayed. If at least one DTC is communicating with the DGC-500, pressing the **Select/Enter** pushbutton will display ACTIVE DTC LIST and VIEW WITH SELECT.

Pressing the **Select/Enter** pushbutton when ACTIVE DTC LIST and VIEW WITH SELECT is displayed places the DGC-500 in DTC mode. The next screen to appear will display the diagnostic lamp status information obtained from the ECU. One of five possible lamp status messages will be displayed. The lamp status messages, in decreasing order of priority, are listed below.

1. ENG STOP LAMP ON
2. WARNING LAMP ON
3. MALFUNC LAMP ON
4. PROTECT LAMP ON
5. NO LAMP IS ON

Only one lamp status will be displayed on the front panel—the highest priority one that is true. An example of the lamp status screen is shown in Figure 3-4. BESTCOMS may also be used to view the status of all lamps.



Figure 3-4. Lamp Status Screen

To be notified that a lamp status exists, the pre-alarm for active DTCs must be enabled through BESTCOMS. When one or more active DTCs exist in the ECU, a lamp status indicating the severity of the combined DTCs should exist. After the pre-alarm is annunciated (by LED indicator, horn, and/or dial-out), the operator will know to check the lamp status, active system DTCs, and what relationship the DTCs have with the parameters. To check the DTC/parameter relationship at the front panel, access the ECU Parameters menu of the HMI. In BESTCOMS, hover the mouse pointer over the DTC to see its related parameter.

To use the HMI to view the list of active DTCs, press the **Raise/Scroll** pushbutton. The next screen to appear will display the first DTC, the number of DTCs, the Suspect Parameter Number (SPN), the Failure Mode Indicator (FMI) and the Occurrence Count (OC).

NOTE
Always refer to the engine manual for the meaning of SPN and FMI combinations, especially for proprietary DTC descriptions.

In the DTC screen example of Figure 3-5, the first DTC of five is displayed. The SPN is 111 (coolant level), the FMI is 1 (low voltage from the sender, thus we have low coolant level), and the OC is 2 (the engine has had a low coolant level twice before). Refer to the engine manufacturer CAN interface documentation for specific descriptions of codes.

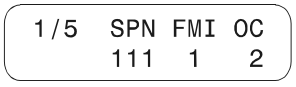

Figure 3-5. DTC Screen Example

After viewing the last DTC, screen 5 of 5, VIEWED ALL ACTIVE and USESELECT TO CLEAR will be displayed. This also applies when viewing previous DTCs.

Clearing the active or previous DTCs, by pressing the **Select/Enter** pushbutton, will give one of four responses.

1. A positive acknowledgment which causes ACTIVE DTC(S) HAVE BEEN ERASED to be displayed.
2. A negative acknowledgment which causes ERROR - NEGATIVE ACK and CANNOT ERASE DTC(S) to be displayed.
3. A timeout for acknowledgment which causes ERROR - ACK TIME OUT and CANNOT ERASE DTC(S) to be displayed. This occurs when approximately two seconds have elapsed with CAN working and no positive or negative acknowledgment received.

4. A CAN communication failure causes ERROR - DISCONNECTED and CANNOT ERASE DTC(S) to be displayed. This occurs when CAN is disconnected or the ECU is not functioning properly.

After viewing the response, the only way to back out of the screen is to press the **Previous** pushbutton. The user is then taken back to the Alternate Display mode. Pressing the **Display Toggle** pushbutton will take the user to the Menu mode screens. This also applies when viewing previous DTCs.

ECU Parameters Mode

When the optional J1939 communication is enabled, access to the ECU Parameters menu is available. This menu displays parameters metered from the ECU. Only parameters related to genset applications are metered from the ECU and displayed here. A submenu for viewing the engine configuration parameters is also accessible from the ECU Parameters menu.

If a parameter is never sent after communication is established, or the ECU has sent information notifying the DGC-500 that the parameter is not supported (non-applicable), then the parameter's screen will be hidden and skipped when scrolling from screen to screen in the ECU Parameters menu.

If a DTC is associated with one of the parameters, then the screens will function like the Pre-Alarm screens of the Alternate mode display. When scrolling through the menu, the user is taken to the new DTC-related screens first. The DTC-related screen will then blink while alternating between the parameter's value and the DTC information.

> NOTE
>
> If no ECU support is required, then parameters are updated within the DGC-500 only when "pulsing" the ECU and while the engine is running.

The following list includes all of the engine system monitoring parameters read from the ECU (if supported) in the order in which they appear when pressing the **Raise/Scroll** pushbutton, having started from the ECU Parameters menu.

1. Throttle position
2. Percent load at current rpm
3. Actual engine percent torque
4. Engine speed
5. Injection control pressure
6. Injector metering rail pressure
7. Total engine hours ✳
8. Trip fuel
9. Total fuel used
10. Engine coolant temperature ✳
11. Fuel temperature
12. Engine oil temperature
13. Engine intercooler temperature
14. Fuel delivery pressure
15. Engine oil level
16. Engine oil pressure
17. Coolant pressure
18. Coolant level
19. Fuel rate
20. Barometric pressure
21. Ambient air temperature
22. Air inlet temperature
23. Boost pressure
24. Intake manifold temperature
25. Air filter differential pressure
26. Exhaust gas temperature
27. Battery voltage ✳
28. Battery voltage (at ECU), switched
29. Active diagnostic codes
30. Previously active diagnostic codes

✳ This parameter may be monitored either directly by the DGC-500 itself or by the DGC-500 and the appropriate analog sender when the SAE J1939 interface is disabled.

Figure 3-6 illustrates the screens of the ECU Parameters menu after the DGC-500 has established communication with the ECU.

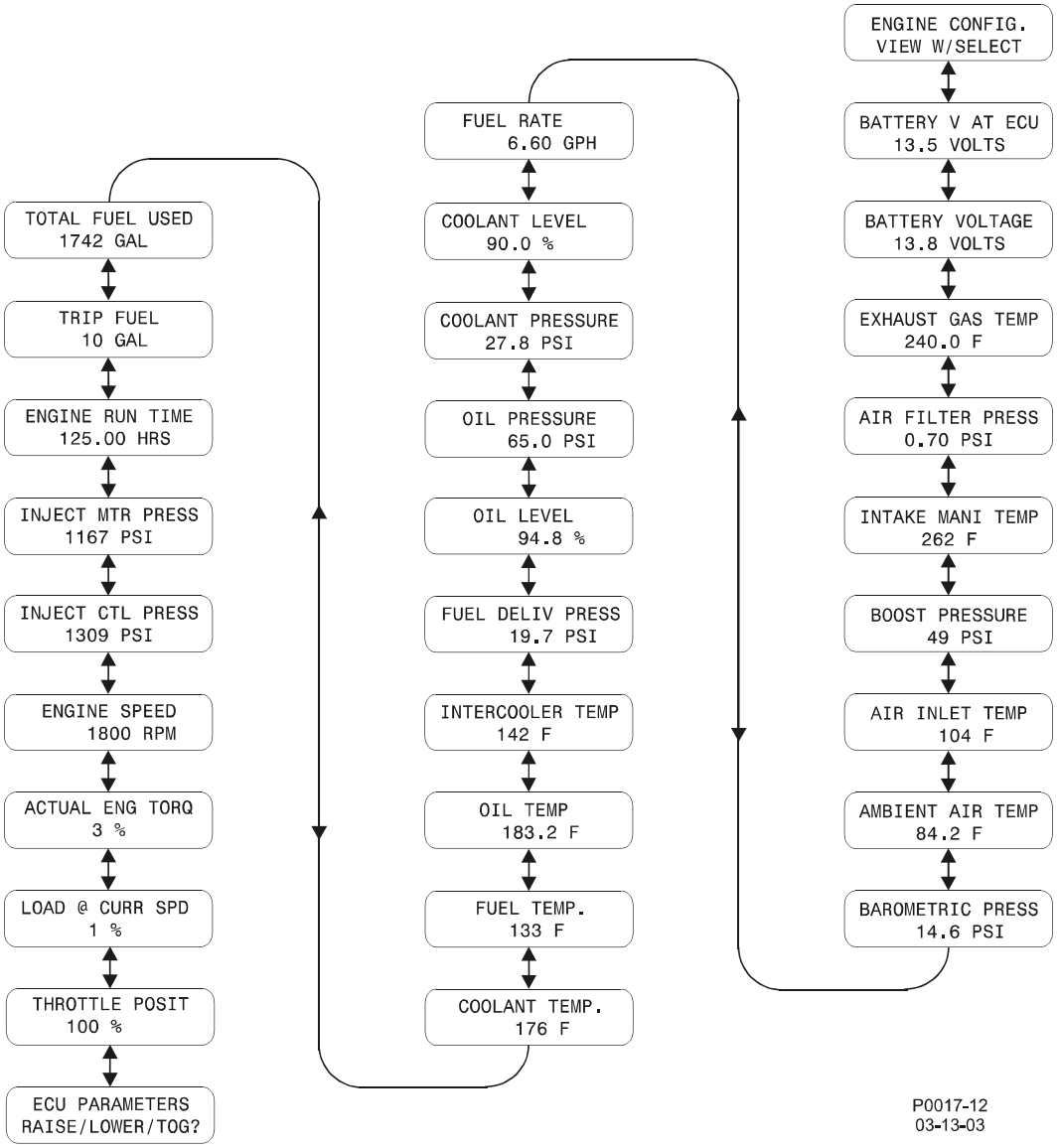

Figure 3-6. ECU Parameters Navigation

Engine Configuration Parameters

Engine configuration parameters can be accessed from the ECU Parameters menu. To view these parameters read from the ECU, press the **Select/Enter** pushbutton while viewing the Engine Configuration (ENGINE CONFIG.) screen. The following list of all engine configuration parameters is presented in the order in which they appear when pressing the **Raise/Scroll** pushbutton.

1. Engine speed at idle, point 1
2. Percent torque at idle, point 1
3. Engine speed at point 2
4. Percent torque at point 2
5. Engine speed at point 3
6. Percent torque at point 3
7. Engine speed at point 4
8. Percent torque at point 4
9. Engine speed at point 5
10. Percent torque at point 5
11. Engine speed at high idle, point 6
12. Gain (KP) of the end-speed governor
13. Reference engine torque
14. Maximum momentary engine override speed, point 7
15. Maximum momentary override time limit
16. Requested speed control range lower limit
17. Requested speed control range upper limit
18. Requested torque control range lower limit
19. Requested torque control range upper limit

Figure 3-7 illustrates the Engine Configuration Parameter menus after the DGC-500 has established communication with the ECU.

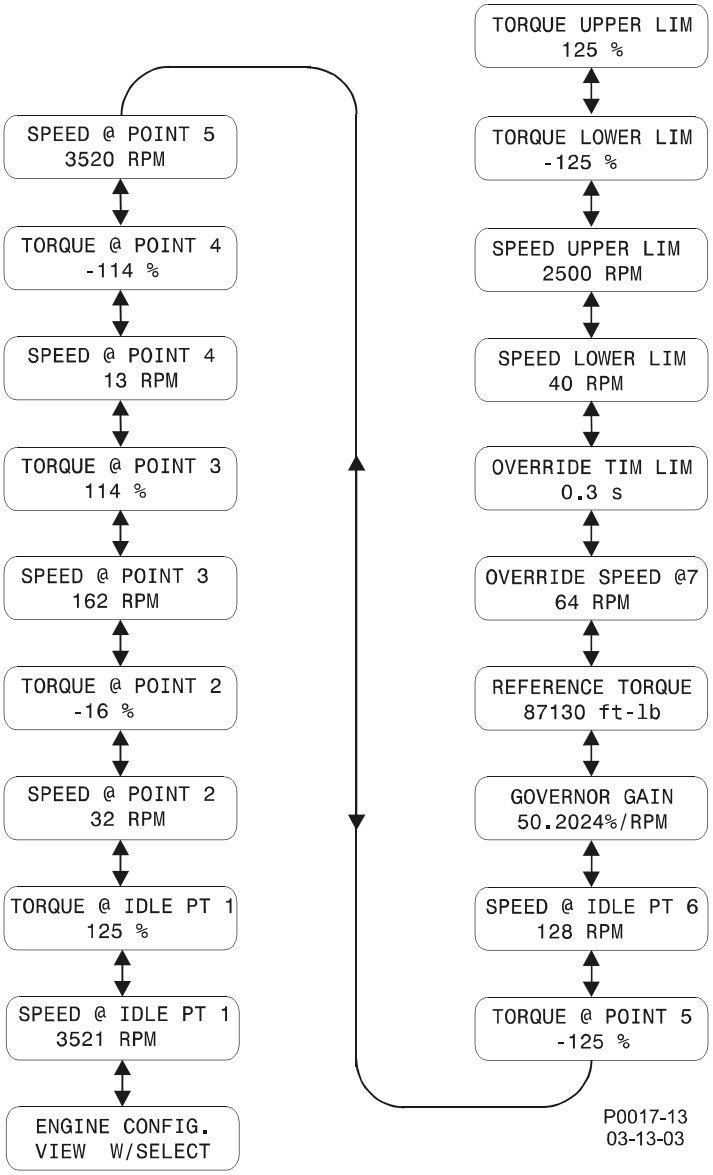

Figure 3-7. Engine Configuration Menu Navigation

Menu Mode

Press the **Select/Enter** pushbutton while viewing the top-level Menu mode screen (shown in Figure 3-2), to access the four menu branches illustrated in Figure 3-8. Press the **Lower/Scroll** or **Raise/Scroll** pushbuttons to view the top of each menu branch. Within Menu 1, 2, 3, 4, or 5, use the **Select/Enter** pushbutton to move right, the **Previous** pushbutton to move left, the **Raise/Scroll** pushbutton to move up, and the **Lower/Scroll** pushbutton to move down.

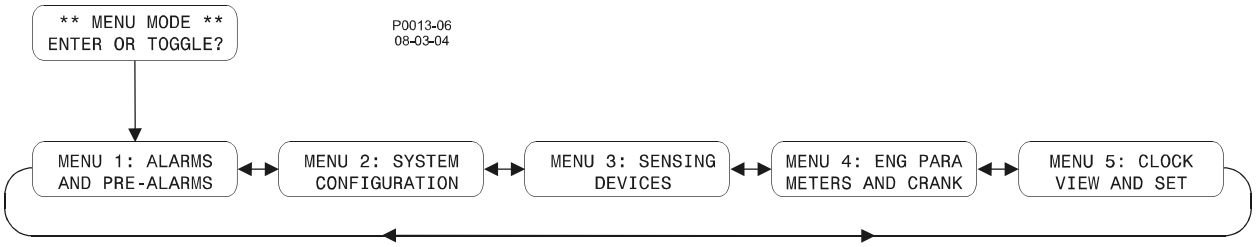

Figure 3-8. Menu Mode Navigation

Menu 1

DGC-500 pre-alarms and alarms are viewed and configured in Menu 1. Figure 3-9 illustrates the Menu 1 screens.

Menu 2

System configuration settings are viewed and configured in Menu 2. Figure 3-10 illustrates the Menu 2 screens.

Menu 3

DGC-500 calibration, transformer ratios, and transducer failure alarms, are viewed and configured in Menu 3. Figure 3-11 illustrates the Menu 3 screens. The menu screens associated with the calibration process are illustrated in Section 5, *Installation, Calibration*.

Menu 4

Engine cool-down time and cranking parameters are viewed and configured in Menu 4. Figure 3-12 illustrates the Menu 4 screens.

Menu 5

Real-time clock settings are viewed and set in Menu 5. Figure 3-13 illustrates the Menu 5 screens.

Exiting Menu Mode

Pressing the **Display Toggle** pushbutton exits the Menu mode from any level and branch. When the **Display Toggle** pushbutton is used to exit Menu mode, the user's place within the menu tree is saved. The display will return to the same screen the next time that Menu mode is entered. If the **Display Toggle** pushbutton is pressed before a new setting is saved, the existing setting is retained.

Using the **Previous** pushbutton to back out of Menu mode ensures that the top-level Menu mode screen is viewed the next time Menu mode is entered.

Sleep Mode

Sleep mode serves as a power saving feature. If the DGC-500 is in Off mode for more than 15 minutes, the front panel LEDs, LCD, and LCD backlight are turned off. The DGC-500 resumes normal display operation when any front panel button is pressed or the genset is started remotely via the ATS input. If needed, Sleep mode can be permanently disabled via BESTCOMS. Refer to Section 4, *BESTCOMS Software* for more information.

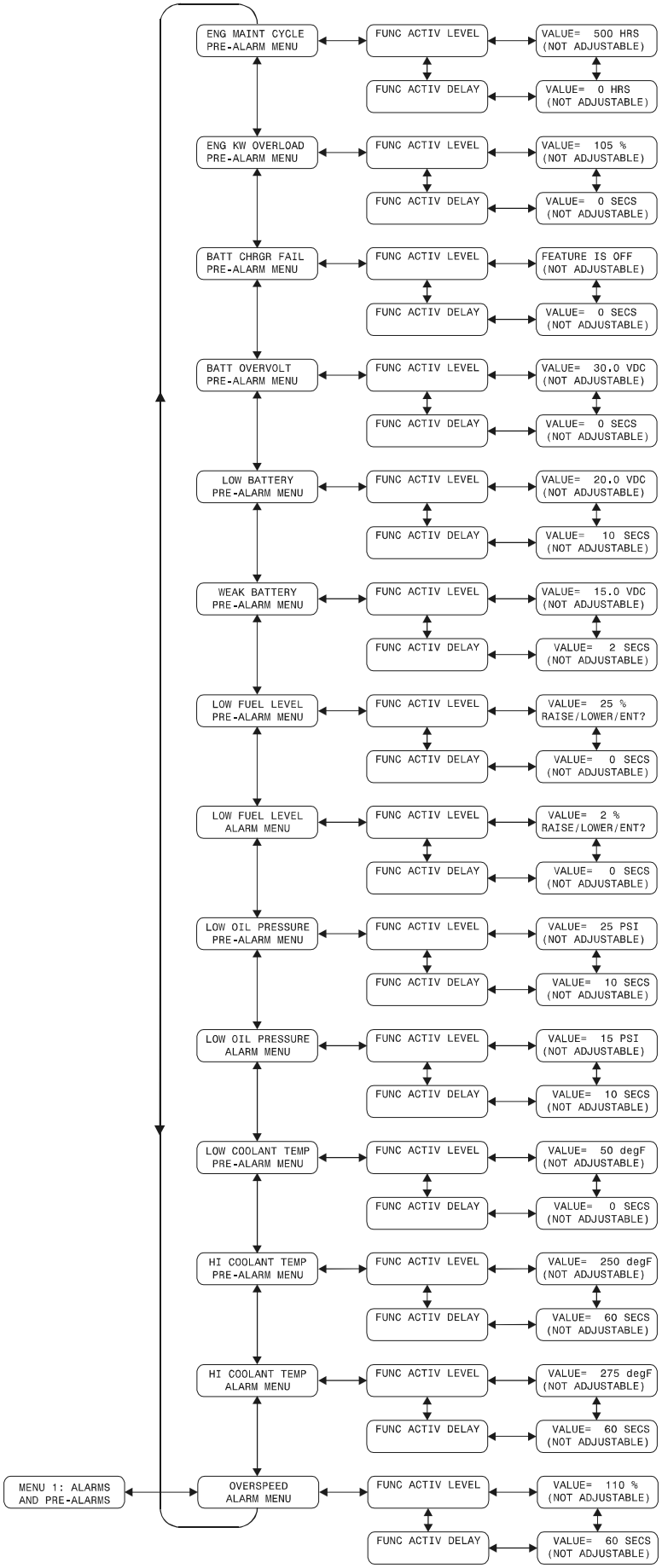

Figure 3-9. Menu 1 Navigation

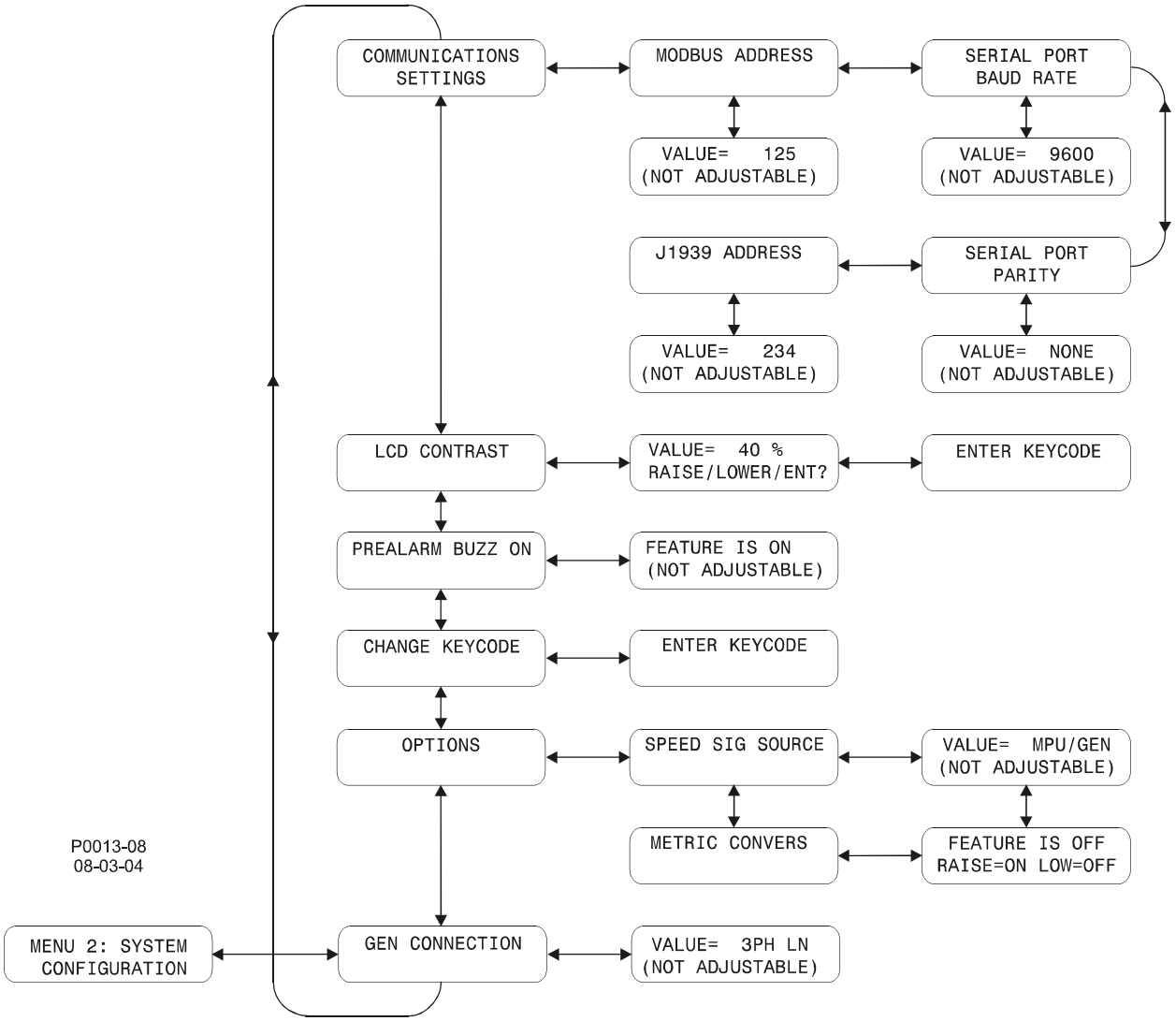

Figure 3-10. Menu 2 Navigation

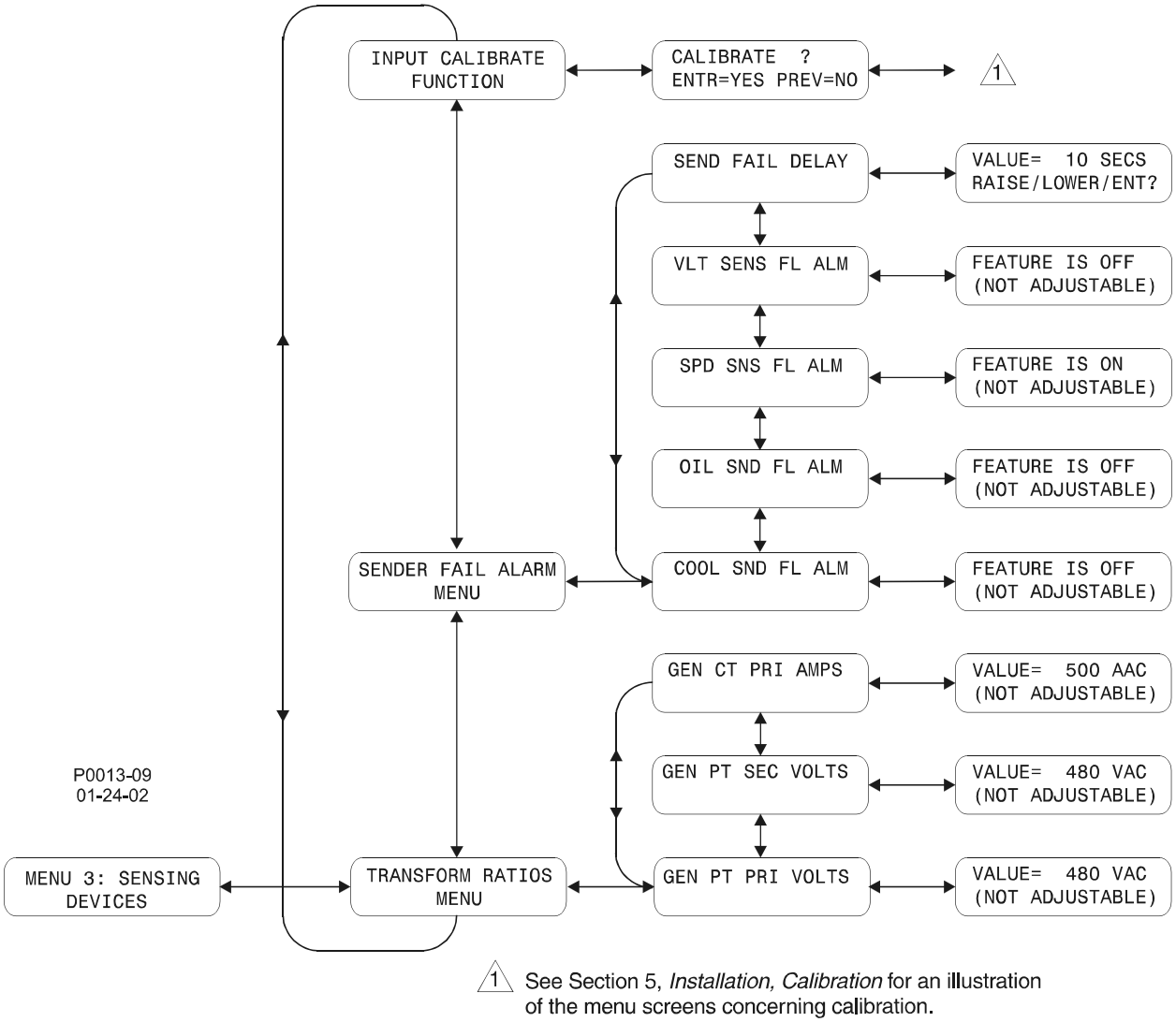

Figure 3-11. Menu 3 Navigation

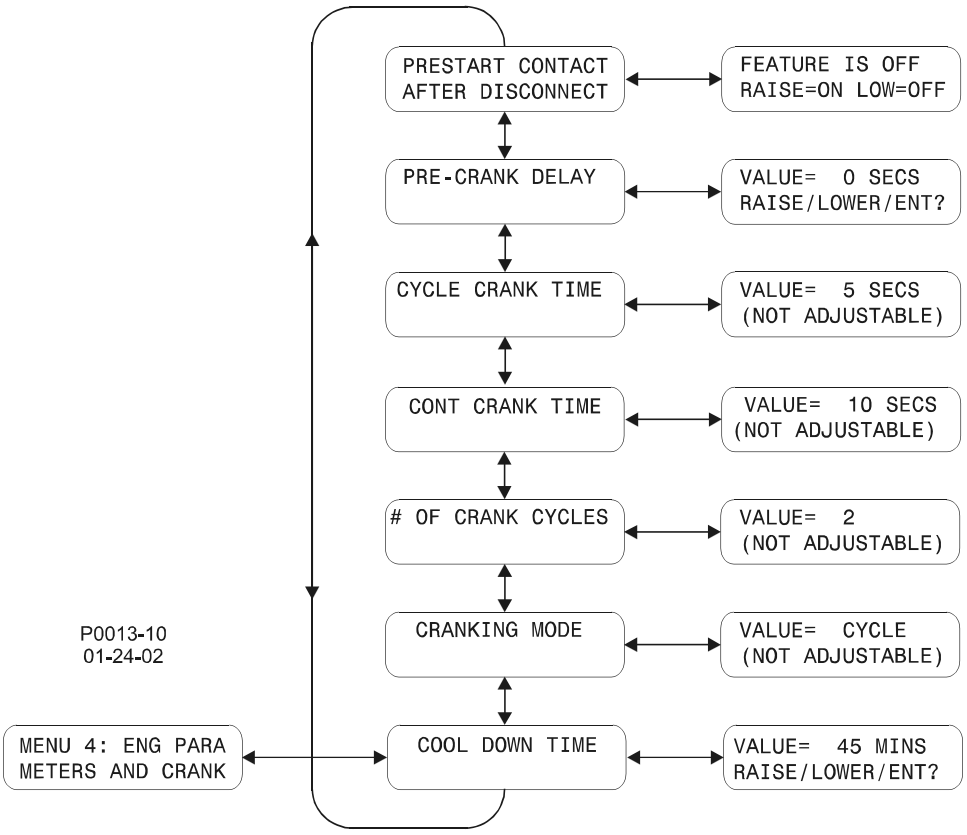

Figure 3-12. Menu 4 Navigation

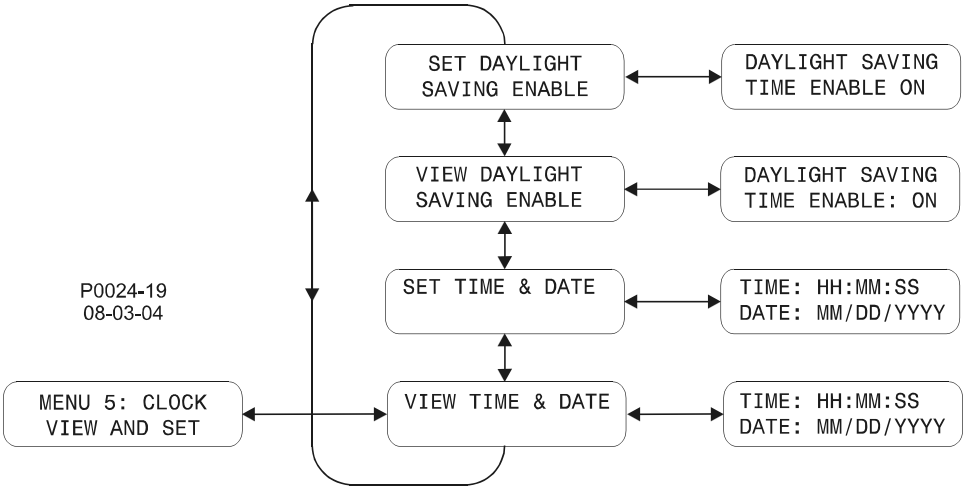

Figure 3-13. Menu 5 Navigation

Katolight Service - Master Repair Manual - Page 1861

Changing Settings

A setting change generally consists of the following steps. The number of each step corresponds to the numbered call-outs in the setting change example of Figure 3-14.

1. Use the HMI pushbuttons to navigate to the screen of the setting to be changed.
2. Press the **Select/Enter** key to access the ENTER KEYCODE screen.
3. Enter the key code by pressing the appropriate HMI pushbuttons in the proper sequence. Key code entries appear as asterisks on the ENTER KEYCODE screen. Refer to the *Key Code* paragraph for details about using key codes.
4. Press the **Select/Enter** pushbutton to access the setting to be changed.
5. Use the **Raise/Scroll** and **Lower/Scroll** pushbuttons to increment and decrement the setting as needed.
6. Press the **Select/Enter** pushbutton to save and view the setting change.

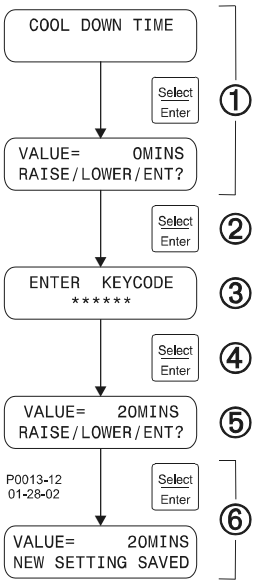

Figure 3-14. Setting Change Example

The procedure for setting the real-time clock at the front panel differs from the above procedure. The following paragraphs describe how the front-panel HMI is used to set the clock.

Setting the Real-Time Clock at the Front Panel

The clock is set at the front panel by entering the menu display mode, scrolling to menu 5 (CLOCK VIEW AND SET), and entering the SET TIME & DATE menu. The SET TIME & DATE menu contains a screen displaying an editable snapshot of the time and date. The hours field will be blinking. The blinking indicates which field will be modified when the Raise/Scroll or Lower/Scroll pushbutton is pressed to change the value.

Pressing Raise/Scroll increments the active value and pressing Lower/Scroll decrements the active value. If the Raise/Scroll or Lower/Scroll pushbutton continues to be pressed, the value of the active field automatically rolls over to the minimum or maximum value. A different field is selected for editing by pressing the Display Toggle button to move right or the Previous button to move left.

The time and date setting screen is exited by pressing Select/Enter. The user can then press Select/Enter to save the settings or Previous to discard the changes.

Key Code

The DGC-500 is delivered with a key code consisting of the following pushbutton sequence.

1. Raise/Scroll
2. Lower/Scroll
3. Select/Enter
4. Previous
5. Display Toggle
6. Select/Enter
7. Select/Enter

The key code can be changed by accessing the CHANGE KEYCODE screen of Menu 2. Observe the following guidelines when changing the key code.

- Allowable key code pushbuttons are Raise/Scroll, Lower/Scroll, Select/Enter, Previous, Display Toggle, Phase Toggle, Alarm Silence, and Lamp Test.
- A key code entry must be followed by two presses of the Select/Enter pushbutton.
- A key code can consist of one to eight presses of the allowable key code pushbuttons.
- A key code cannot contain consecutive presses of the Previous pushbutton.

Front Panel Adjustable Parameters

Most DGC-500 settings can be viewed at the front panel display. The settings that can be adjusted at the front panel are listed in Table 3-4. With the exception of the time and date, all of the listed settings are protected by the front-panel key code.

Table 3-4. Front Panel Adjustable Settings

Parameter	Setting Range, Increment
Sensor Failure Alarm Time Delay	1 to 30 s, 1 s
Metric Conversion	On or Off
Low Fuel Pre-Alarm Level	10 to 100%, 1%
Low Fuel Alarm Level	2 to 50%, 1%
Pre-Crank Contact After Cranking	Open or Closed
Cool-Down Time	0 to 60 m, 1m
Pre-Crank Time Delay	0 to 30 s, 1 s
Time	—
Date	—

ENGINE CONTROL UNIT (ECU) SUPPORT

The following paragraphs describe the support provided by the DGC-500 for operation with an engine control unit (ECU).

Enabling ECU Support

To enable ECU support, the user must access the SYST menu in BESTCOMS and select *Enable ECU Support* under the box entitled *CANBus/J1939 Interface.* After resending the settings, the DGC-500 will ignore the analog inputs for coolant temperature, oil pressure and engine speed, and it will no longer calculate engine run-time. Once the DGC-500 establishes communication with an ECU, the engine run-time, coolant level, coolant temperature, oil pressure, and engine speed will be updated with the ECU values.

NOTE

With *Enable ECU Support* selected, there is a non-programmable Coolant Level Sender Fail alarm that can annunciate when the engine is either off or running.

Coolant level is metered and displayed only when Enable ECU Support is selected in BESTCOMS.

ECU Constraints

An external source cannot always turn the engine off without removing power from the ECU. Removing power from the ECU is the only way to remove fuel from the engine and shut it down. Different ECU manufacturers have their own rpm setpoints for reapplying fuel to an engine. For example, if the ECU is powered up and the engine is still spinning above 60 rpm, the ECU may automatically turn the fuel on.

Not being able to stop the engine without removing power from the ECU causes two problems. The first problem is that the only way to stop the engine is to turn the ECU off and wait for the engine speed to decrease below 60 rpm before reapplying ECU operating power. Otherwise, the engine will resume running. The second problem is that while the ECU is off, you can no longer meter and update coolant level, coolant temperature, oil pressure, and engine speed values, effectively disabling features like low coolant temperature alarm/pre-alarm and crank control.

Katolight Service - Master Repair Manual - Page 1863

The DGC-500 Solution

The DGC-500 resolves ECU constraints by using four user-programmable timers that are accessed through BESTCOMS. Each timer setting is described in the following paragraphs.

Pulse Cycle Time. This timer setting establishes the time, in minutes, that the DGC-500 waits before pulsing the ECU again.

Response Timeout. This timer setting defines the length of time, in seconds, that the DGC-500 attempts communication with the ECU when the DGC-500 is in the Pulsing state or Connecting state.

Settling Time. This timer setting controls the length of time, in tenths of seconds, that the DGC-500 gathers data after connecting to the ECU during the Pulsing state. This allows all metered values to be sent and ramped up to their steady state values. Metered values are sent out by the ECU at different rates as designated by the J1939 protocol. ECU values initially sent are low and the ECU takes time to average out its own data values.

Engine Shut Down. This timer setting determines the length of time, in seconds, that the DGC-500 remains disconnected from the ECU when going from Running to Shutdown before starting the first pulse. This timer should allow enough time for the engine to slow down so that when the DGC-500 pulses, the ECU will not restart the engine.

Alarms and Pre-Alarms

If ECU communication is not established during the Connecting state or is lost during the Pre-Start, Cranking, Resting, Running or Cooling states, then a non-programmable ECU Communications Fail alarm is annunciated. If the last pulse was unsuccessful (ECU communication was not established), then the ECU Communications Fail pre-alarm will annunciate. The pre-alarm is checked only after the Pulsing state and is annunciated only during the Ready state.

To clear Coolant Level alarms when ECU power support is needed, the user must first correct the condition causing the alarm and then pulse the ECU to update the data. The user may pulse the ECU remotely through BESTCOMS or locally by pressing the front panel pushbuttons in the ordered sequence of Auto, Off.

Fuel Solenoid Relay

Because there is no external fuel solenoid to connect to, the fuel solenoid relay has been designated to control ECU operating power. For example, Detroit Diesel's ECU applies fuel to the engine only after engine speed rises above 60 rpm. The following timers control the fuel solenoid relay when the engine is not running.

- Pulse Cycle Time - fuel solenoid is open
- Response Timeout - fuel solenoid is closed
- Settling Time - fuel solenoid is closed
- Engine Shut Down - fuel solenoid is open

> NOTE
> When ECU support is enabled during Pre-start and Resting, the fuel solenoid is closed.

Display Values (ECU Support Enabled)

The ECU is able to give the DGC-500 in-depth information about the values it sends. This makes it possible for the DGC-500 to display accurate information when metering these values from the ECU. After successfully pulsing the unit, the last values gathered when powering-off the ECU are displayed until the next pulse. The following is a list of display values:

- Value - the actual value is displayed if the last pulse was successful or the engine is running.
- No Communications (abbreviated as NC) - displayed if the last pulse was unsuccessful.
- Not Applicable (abbreviated as NA) - the ECU does not monitor this data value.
- ECU Data Not Sent (abbreviated as NS) - data was not sent in the time designated by the J1939 protocol.
- Sender Failure (abbreviated as SF) - the ECU has determined a sender failure for that metered value.

ECUs with an External Fuel Solenoid

The DGC-500 supports ECUs that are able to cut-off fuel from the engine without powering the ECU off. The DGC-500 requests engine run-time every minute to keep the ECU from going into a sleep mode. After the Pulse Cycle Timer expires, the DGC-500 checks whether ECU communication exists. If so, the DGC-500 will not pulse the ECU. The same goes for Connecting, except that the DGC-500 remembers if it skipped the Connecting state. If it did, then the DGC-500 will also skip the Engine Shutting Down state when it stops the engine.

For ECUs that have an external fuel solenoid, it is recommended that the Engine Shut Down timer be set to its minimum value. This ensures that, if the DGC-500 temporarily loses power while running, the unit will go straight into the Run state and go to the Shutting Down state when the unit goes to Off. It is also recommended that the Response Timeout Timer be set to its minimum value in order to set the ECU Communications Fail pre-alarm as soon as possible.

The HMI screens shown in Figure 3-15 are displayed if the last attempt to pulse the ECU for an information update was unsuccessful.

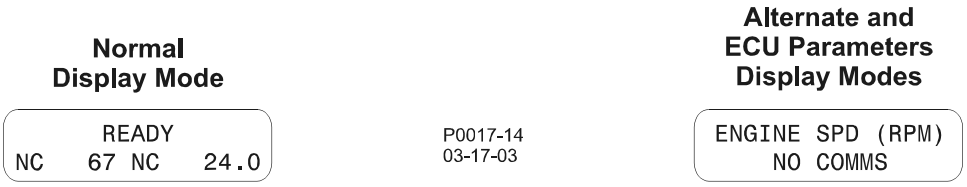

Figure 3-15. Screens Shown Following Unsuccessful Information Update from ECU

STATE MACHINES

A state machine is any device that stores the status of something at a given time. An input change can change the status and/or cause an action or output to occur for any given change. A finite state machine can be used to solve problems and describe the solution for system maintainers. State machine illustration methods range from simple tables to graphically animated illustrations.

The following paragraphs describe how the DGC-500 functions as a state machine.

System Configuration

- RUN, OFF and AUTO are selectable through the front panel HMI and OFF and AUTO are selectable through BESTCOMS. However, for clarity, the term AUTO will not be used in this section. Auto-Run and Auto-Off will be used instead. Auto-Run means the unit is in Auto while the automatic transfer switch (ATS) is closed, or the user started the engine remotely through BESTCOMS. Auto-Off means the unit is in Auto while the ATS is open, or the user stopped the engine remotely through BESTCOMS. The system configuration settings for the DGC-500 are Run, Off, Auto-Run and Auto-Off.
- If BESTCOMS remotely started the engine before a reset occurred or the system configuration goes to Off, then the Remote Start setting in BESTCOMS is set to Stop.
- If ECU support is enabled when the engine is running and the system configuration goes to Off, then the unit will go to the Shut Down state. Otherwise, it will transition to the Ready state and pulse the ECU.
- If ECU support is disabled and system configuration goes to Off, then the unit will always transition to the Ready state.

Operating States

The DGC-500 supports 11 operating states. Each operating state is illustrated by a flowchart later in this section.

- *Restart/Power-Up*. The initial state.
- *Ready*. The DGC-500 is in the Off or Auto-Off mode.
- *Pulsing*. ECU Only—pulses (momentarily powers up) the ECU for updated information.
- *Connecting*. ECU Only—the system configuration just changed to Run or Auto-Run.
- *Pre-Start*. Closes the pre-start relay or pauses the DGC-500 while it is not safe to crank.

Katolight Service - Master Repair Manual - Page 1865

- *Cranking*. Cranks the engine until it is above the crank disconnect speed.
- *Resting*. Occurs between crank cycles and does not crank the engine.
- *Running*. The unit is now running and no longer cranking.
- *Cooling*. Cool down running engine if a load is or was applied when going to Auto-Off mode.
- *Shutting Down*. ECU Only—wait for engine to stop rotating before "pulsing".
- *Alarm*. Alarm was triggered, wait for the alarm to clear.

State Transitions

Criteria used for deciding state transitions are based on the following input events.

- System Configuration (Run, Off, in Auto with ATS closed, in Auto with ATS open)
- Analog/ECU sender data (example: Engine Speed)
- Programmable auxiliary inputs
- Switch data (Coolant Level Switch, ATS, Emergency Stop Button)
- ECU-specific data (example clearing/requesting diagnostics)
- Various programmable timers (run-time, cycles, delays, time-out length)
- Programmable I/O settings
- Alarm settings (thresholds, enabling and timers)
- Other settings selectable through BESTCOMS.

Input events are used in deciding the following output events.

- Output relays on the DGC-500 control the generator and other devices connected to the DGC-500.
- LED output is controlled by the system configuration setting, active alarm/pre-alarms, and by the supplying load criteria.
- The LCD is controlled by the value of data being displayed, the state of the DGC-500, and by the viewing mode (Normal, Alternate Display, ECU Parameters, or Menu).
- The horn (or buzzer) is controlled by the Alarm Silence, Run, or Off pushbuttons, and by the Alarm and Pre-Alarm conditions.

Normal Program Control

If an engine does not have an ECU, then ECU Support should be disabled so that the DGC-500 uses analog sender data. An engine with ECU support disabled or ECU support enabled with a constant power supply and accessible fuel solenoid will follow the normal program control flowchart of Figure 3-16.

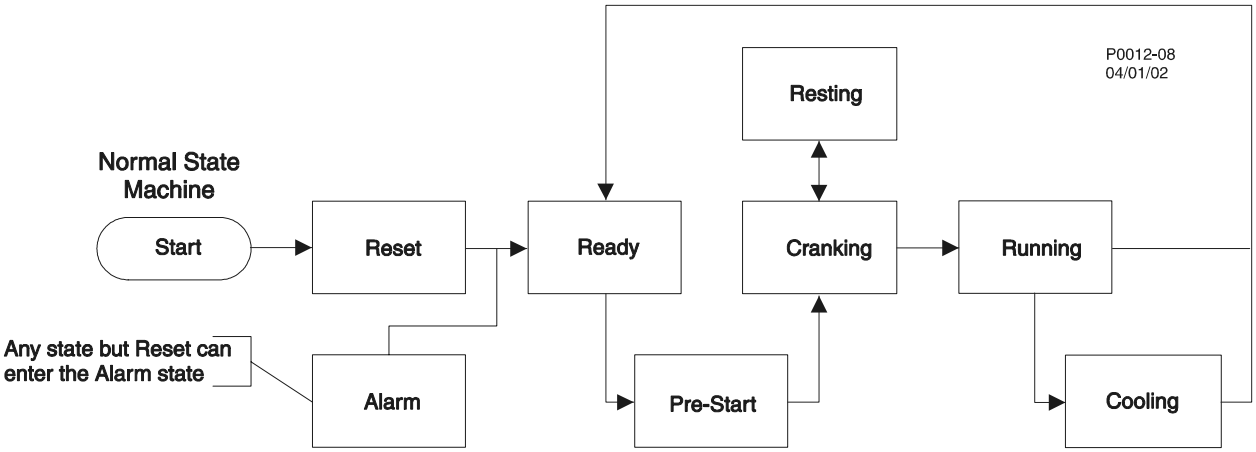

Figure 3-16. Normal Program Control Diagram

ECU Power Support Program Control

If an engine has an ECU, then ECU support should be enabled so that the DGC-500 uses sender data transmitted from the ECU over the J1939 interface. If the engine can be shut down only by powering off the ECU, then the genset will need ECU power support enabled. An engine with ECU support enabled and a need for ECU power support through the fuel solenoid will follow the ECU power support diagram of Figure 3-17.

NOTE

ECU power support is not a selectable option. The DGC-500 will decide between using the fuel solenoid output relay or controlling the fuel to provide ECU power support. This is derived through the following method.

After the Pulse Cycle timer expires, the DGC-500 checks to see if ECU communication is active. If so, then the DGC-500 will not pulse the ECU. The same goes for Connecting, except the DGC-500 remembers if it skipped the Connecting state. If it did, then it will also skip the Engine Shutting Down state when the DGC-500 stops the engine.

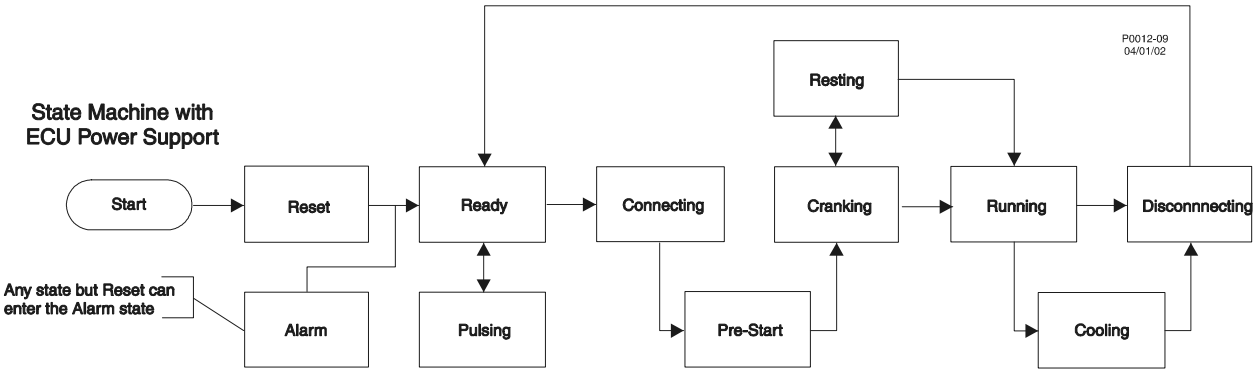

Figure 3-17. ECU Power Support Program Control Diagram

Initial State - Power Up/Reset

This state begins after cycling power to the DGC-500, or after a software reset (i.e. a watchdog timeout) has occurred. The unit will stay in reset for a short time. During this time, the firmware version number appears on the front panel LCD and the DGC-500 averages out enough data counts to calculate accurate analog data. During the Power Up/Reset state, if the previous system configuration was Run or Auto-Run with the ATS closed and ECU support enabled, the fuel solenoid will close. This works to keep the engine running if the unit temporarily losses power, and to gather engine speed data from the ECU to determine if it should go to Off or stay in Run.

After a short time, the old system configuration from the last time the unit was not in reset is checked. If the old system configuration was set to Run or Auto-Run with the ATS closed, then the engine speed is checked against Crank-Disconnect (the rpm value used in deciding when to disengage the starter).

If engine speed is above Crank-Disconnect, then the Power Up/Reset state goes to the Running state.

If the speed is below Crank-Disconnect, the DGC-500 goes to the Ready state and immediately pulses the ECU (if ECU support is enabled). If the previous system configuration was set to RUN, the System configuration will be set to OFF. If the previous system configuration was set to Auto-Run (with the ATS closed), the unit will still go to the Ready state. But then, the Ready state will transition into the Pre-Start state and the Pre-Start state will eventually transition into the Cranking state, and so forth.

Figure 3-18 illustrates the Power Up Reset flowchart.

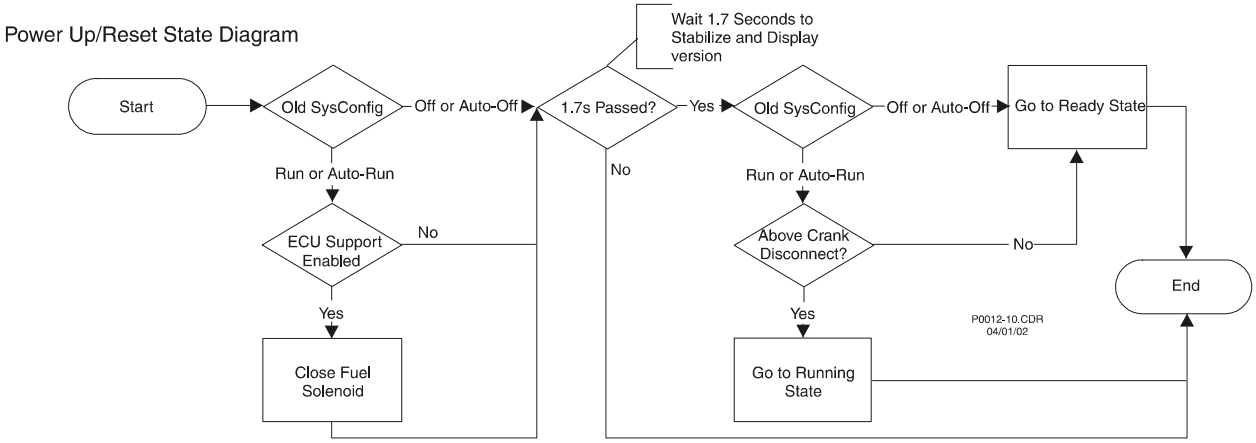

Figure 3-18. Power Up/Reset State Diagram

Ready State

The DGC-500 will be in Ready state when system configuration is Off/Auto-Off. If the system configuration changes to Run/Auto-Run, then it will check to see if it needs to go to the Connecting, Pre-Start or Running state. If ECU support is selected and there is no ECU communication and the Pulse Cycle Timer has expired, the Ready state will transition into Pulsing. The Pulse Cycle Timer can be set to expire and force a Pulsing state. There are three ways to force a pulse.

- When a user logs on to a unit through BESTCOMS, if the unit is in Ready state, a pulse is forced to update the internal variables used to meter ECU data.
- User attempts to clear DTCs from the ECU while the DGC-500 is in Ready (therefore, the ECU is probably powered off).
- Manually force a pulse and update the internal variables. The user can do so in BESTCOMS or locally pulse the ECU by pressing the front panel pushbuttons in the ordered sequence: Auto, Off.

Going to Off or Auto-Off

If the DGC-500 is in the Connecting, Pre-Start, Resting or Cooling state when the unit goes to Off or Auto-Off mode, then the state will transition to the Ready state. If ECU support is enabled, then the unit will go to the Pulsing state immediately after transitioning to the Ready state.

Figure 3-19 illustrates the Ready state flowchart.

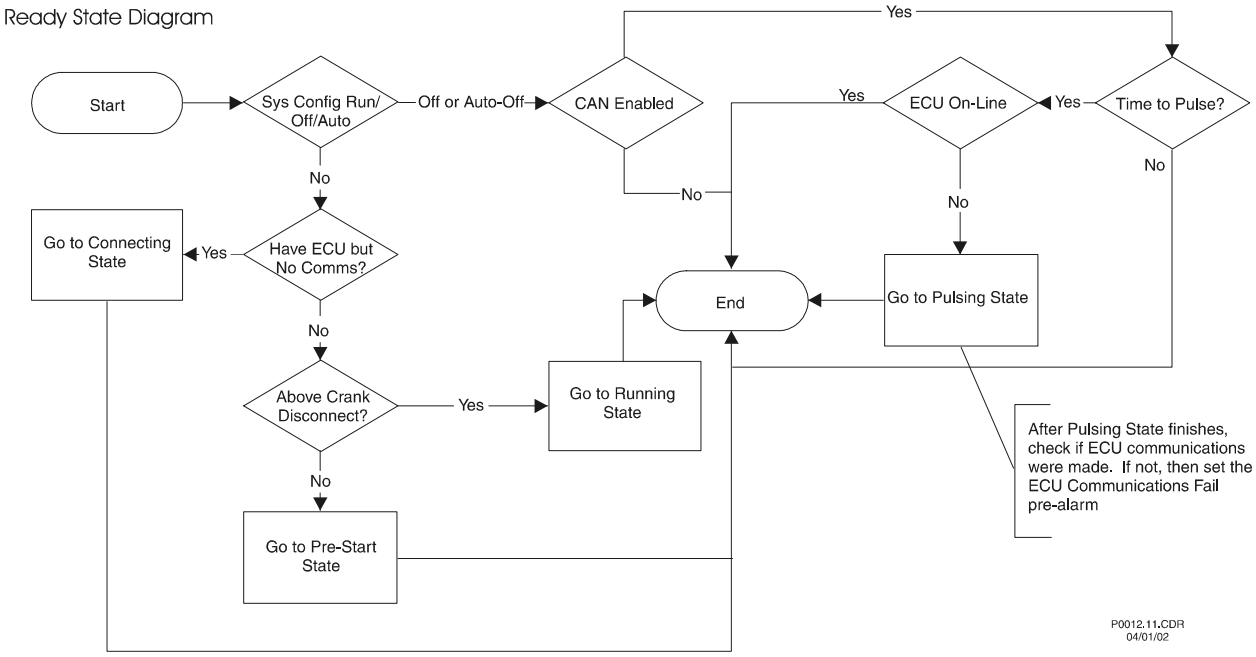

Figure 3-19. Ready State Diagram

Pulsing State

The Pulsing State follows the sequence of events shown in Figure 3-20. The Pulsing state will momentarily power up the ECU to update the DGC-500 internal variables. Once a connection is established with the ECU, GATHERING DATA will appear on the LCD for the duration of the settling time. During settling time, the unit processes any previous request for clearing DTCs from the ECU. The Pulsing state always transitions to the Ready state unless the System configuration changes to Run/Auto-Run. Then, it will transition to the Connecting state as a result of pulsing and will follow the ECU Power Support diagram.

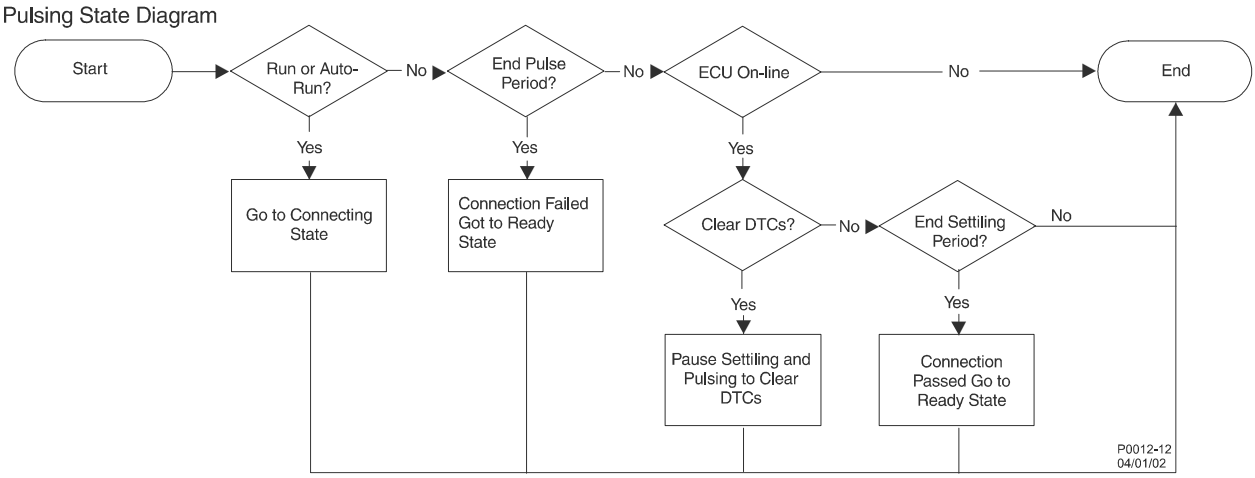

Figure 3-20. Pulsing State Diagram

Connecting State

The Connecting State follows the sequence of events shown in Figure 3-21. If ECU communication is not established by the time the Response Timeout expires, then the ECU Communications Failure Flag is set to trigger the Alarm state. The Connecting state will power up the ECU. Once it reads the engine speed, it checks if it is above Crank-Disconnect. If it is, then it will go to the Running state. Otherwise, it will go to the Pre-Start state.

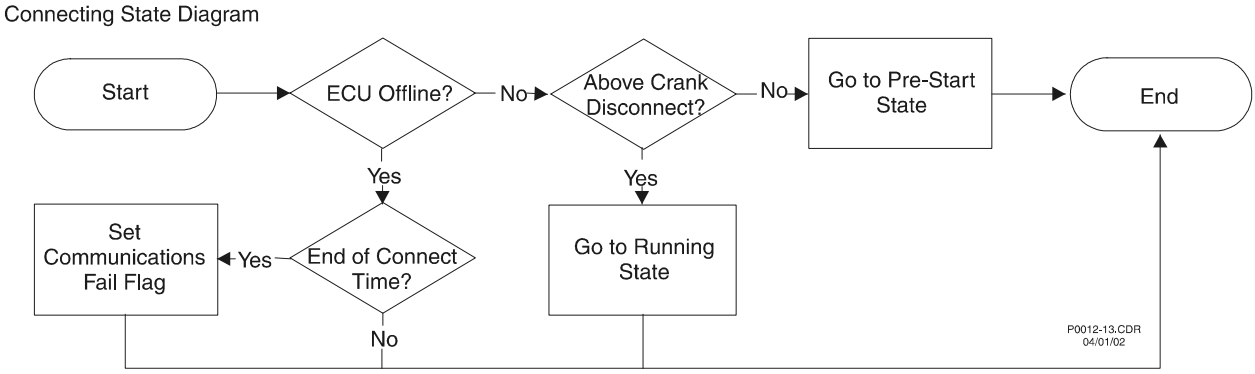

Figure 3-21. Connecting State Diagram

Pre-Start State

This state will transition immediately to the Running state if the engine speed is above Crank-Disconnect. Otherwise, it will wait here and close the Pre-heat relay for the pre-start time delay duration. If engine speed is below Safe-To-Restart (the rpm value used in deciding when to engage the starter) and the Pre-start time delay is expired or set to zero, then it will transition to the Cranking state. If engine speed falls in the range between Crank-Disconnect and Safe-To-Restart, the state will pause and display NOT SAFE TO CRANK along with the rpm value until the engine speed moves out of this range. If it is not safe to crank and there is a pre-start time delay, then the Pre-heat relay will stay closed because it was closed when it was waiting for

the pre-start time delay to expire. If Pre-start time delay was set to zero, then the Pre-heat relay was never closed. Therefore, it would remain open while it is not safe to crank. Figure 3-22 illustrates the Pre-Start state flowchart.

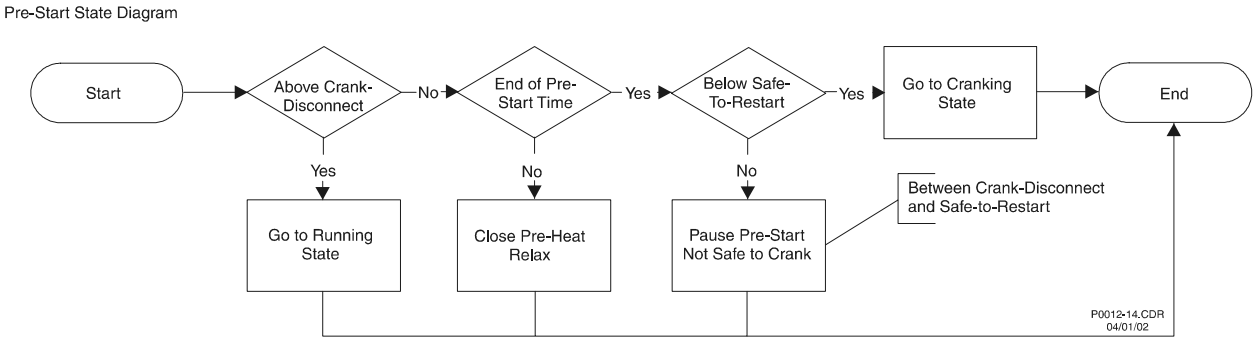

Figure 3-22. Pre-Start State Diagram

Cranking State

This state will engage the starter and transition to the Running state once engine speed is above crank-disconnect. During the Cranking state, the crank-type is checked. If the crank-type is Cycle Crank, then the unit will transition to the Resting state when the crank time expires. If the crank-type is Continuous Crank or is on the last crank cycle when the crank timer expires, then the Over-Crank flag is set to trigger the Alarm state. If system configuration goes to Off/Auto-Off, the unit transitions to the Cooling state. In the Cooling state, if ECU power support is needed, it will go to the Shutting Down state. The Cranking state flowchart is illustrated in Figure 3-23.

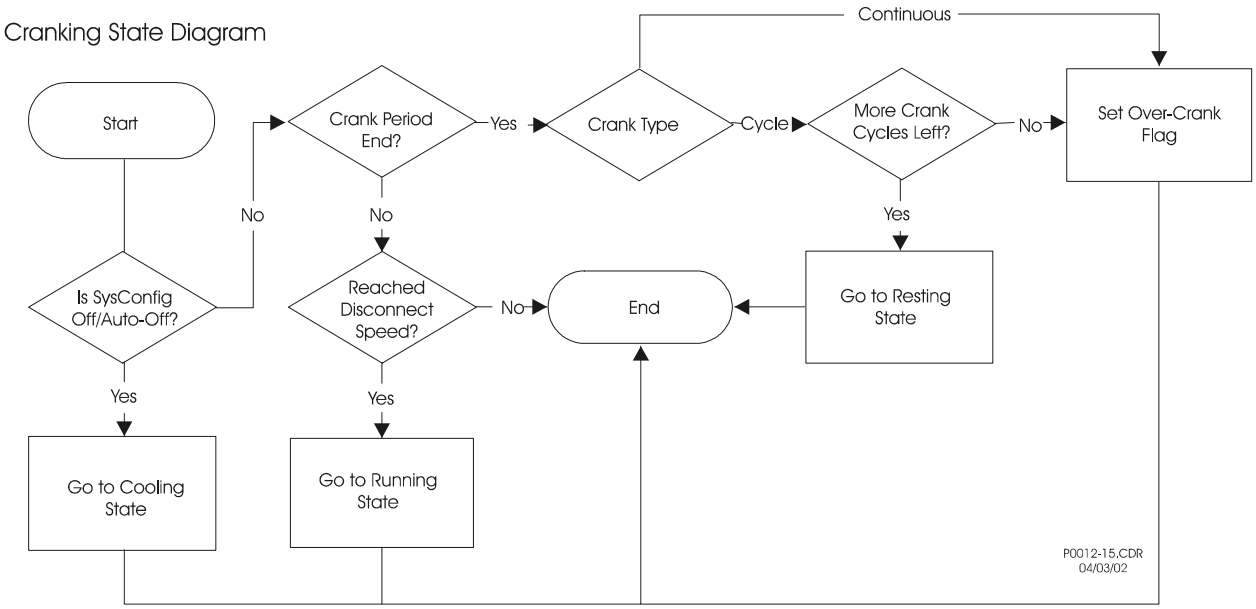

Figure 3-23. Cranking State Diagram

Resting State

If the rest period has ended, the unit will transition back to the Cranking state. If the State Machine is following the ECU Power Support diagram, the Fuel Solenoid relay will be closed during the Resting state. Thus, there is a possibility for the engine to start running during this state. Therefore, when the ECU Power Support diagram is being followed, engine speed is checked to see if it is above crank-disconnect. If it is, the unit will transition into the Running state. Figure 3-24 illustrates the Resting State flowchart.

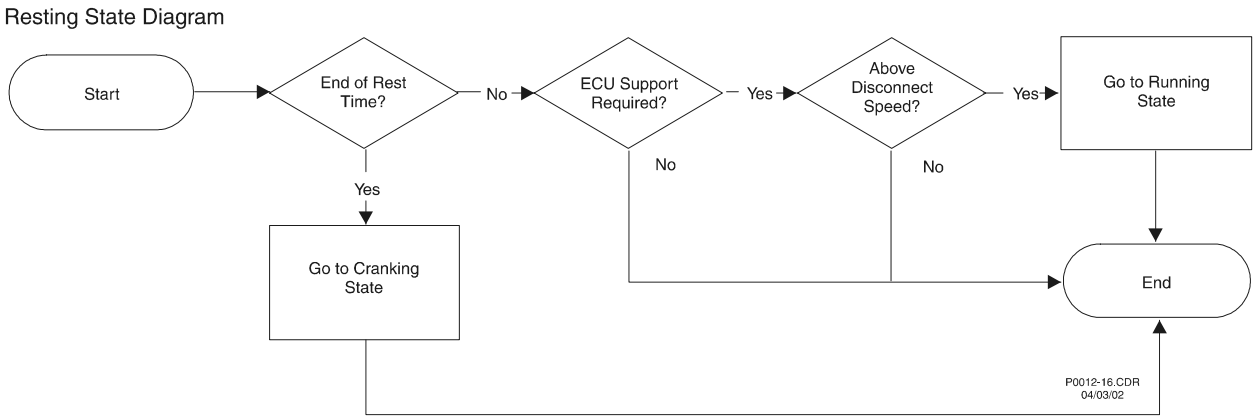

Figure 3-24. Resting State Diagram

Running State

If the System configuration changes to Off/Auto-Off, then the unit transitions to the Cooling state. If System configuration is set to Auto-Run, then the Cool-Down Timer is reset or incremented here if a load is applied and removed from the engine. If Pre-Start Contact After Disconnect was enabled in BESTCOMS, then during the course of this state, the Pre-Start relay will remain closed, otherwise it will be opened. Figure 3-25 illustrates the Running State flowchart.

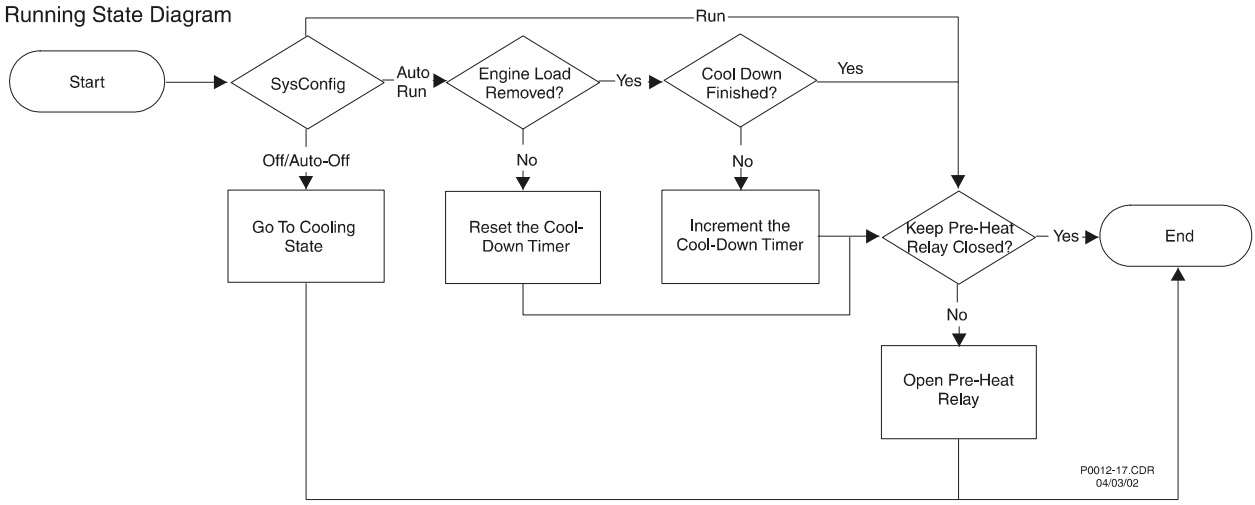

Figure 3-25. Running State Diagram

Cooling State

This state is available only if the unit is in Auto/Off with an unexpired Cool-Down time or if the unit was in the Cranking state when the unit went to Off. If system configuration changes back to Auto-Run, this state will transition straight into the Running state since the engine should already be running while it is in the Cooling state. If System configuration is Off, then the unit was either in the Cranking or Running state and the unit will verify if it should go to the Ready or Shutting Down state. If there is a load applied to the engine or one was applied and then removed, but the engine wasn't running long enough after it was removed to expire the Cool-Down Time, the unit will stay in this state until the Cool-Down timer expires. After the Cool-Down timer expires, if the unit is following the ECU Power Support diagram, the state will transition to the Shutting Down state. Otherwise, it will go to the Ready state. Figure 3-26 illustrates the Cooling state flowchart.

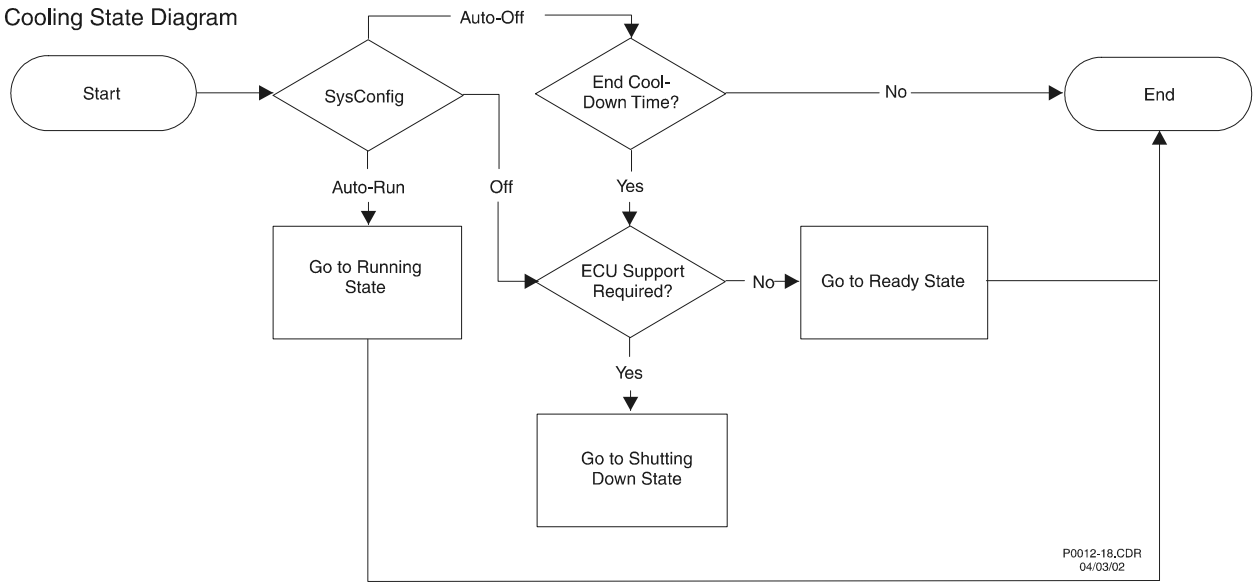

Figure 3-26. Cooling State Diagram

Shutting Down State

The Shutting Down State follows the sequence of events shown in Figure 3-27. If the Engine Shut Down timer expires, the unit transitions to the Ready state. If system configuration changes back to Run/Auto-Run, then this state will transition to the Connecting state, because if the unit is in a Shutting Down state, it will continue to follow the ECU Power Support diagram.

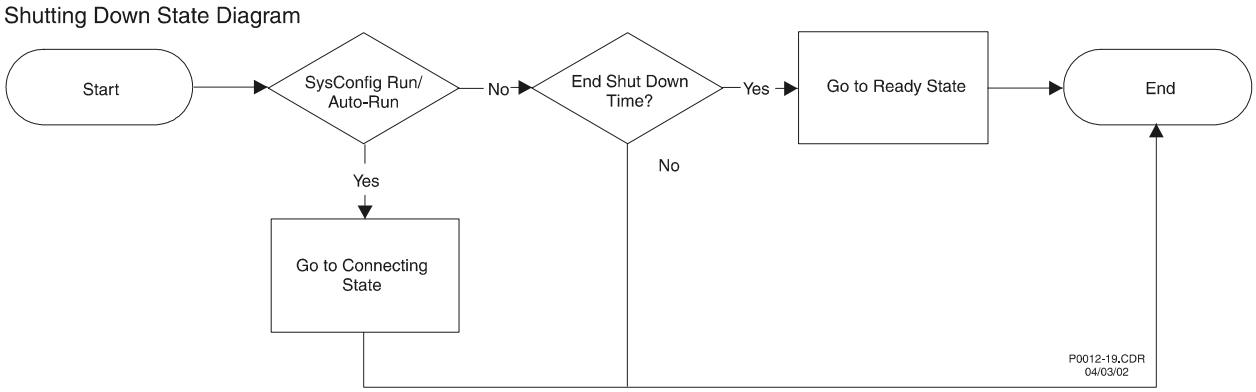

Figure 3-27. Shutting Down State Diagram

Alarm State

All states except Reset can transition to the Alarm state. The State Machine frequently checks for alarms and pre-alarms before running through each state. If an alarm is flagged in the initial alarm check, then the unit goes into an Alarm state and waits there for the alarm to clear. If it is in Run/Auto-Run, then the alarm can be cleared only by going to Off. When the alarm clears, the Alarm state will transition to the Shutting Down state and then go to the Ready state. If ECU Support is enabled, the unit will go to the Pulsing state immediately after transitioning to the Ready state. If in Off/Auto-Off, the alarm can be cleared only if the alarm condition ceases or the user disables the alarm through BESTCOMS. Figure 3-28 illustrates the Alarm State flowchart.

NOTE

With ECU Support enabled, if an alarm was tripped by an ECU value, then it will not clear. This is because in the Alarm state, the fuel solenoid is open, causing the ECU to not have power to update the internal variables. To clear an alarm in this event, the user must remotely place the unit in Off mode through BESTCOMS or go from Auto-Off to Off via the front panel HMI to force a pulse of the ECU.

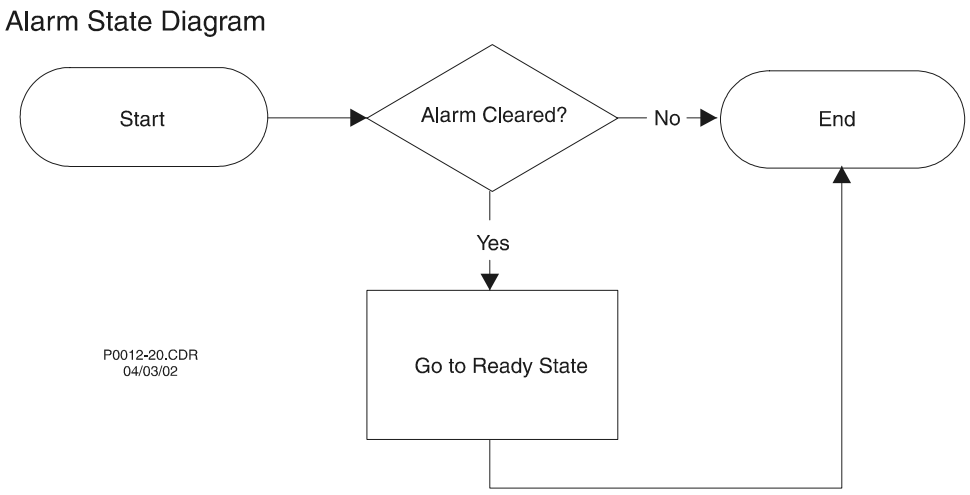

Figure 3-28. Alarm State Diagram

SECTION 4 • BESTCOMS SOFTWARE

TABLE OF CONTENTS

SECTION 4 • BESTCOMS SOFTWARE 4-1
INTRODUCTION 4-1
INSTALLATION 4-1
Installing DGC-500 BESTCOMS 4-1
Connecting the DGC-500 and PC 4-1
STARTING BESTCOMS 4-1
Establishing Communication 4-1
Establishing Communication 4-2
CHANGING SETTINGS 4-2
SENDING AND RECEIVING SETTINGS 4-3
Sending Settings 4-3
Receiving Settings 4-3
SETTING DEFINITIONS 4-3
Sensing Transformers 4-3
Pre-Alarms 4-4
Low Fuel-Low Cool-Batt. OverVolt Tab 4-4
Low Oil-Low Batt Volt-Weak Batt Volt Tab 4-5
Audible-Fuel Level Sender Tab 4-5
Maint. Interv.-Hi Cool Tab 4-6
CAN Bus-Diagnostic Trouble Codes 4-7
Alarms 4-7
Hi Cool-Low Fuel-Low Oil Tab 4-7
Overspeed-Sender Fail Tab 4-8
Engine Cranking 4-9
System 4-10
Programmable Inputs and Outputs 4-12
Input Setup Tab 4-12
Output Setup Tab 4-13
Generator Protection 4-14
51 Tab 4-14
47 Tab 4-15
27 Tab 4-16
59 Tab 4-17
81 Tab 4-18
REAL-TIME CLOCK 4-19
PROGRAMMABLE SENDERS 4-19
Fuel Level Type 4-20
RUN STATISTICS 4-20
EVENT LOG 4-21
SETTINGS FILES 4-22
Printing Settings Files 4-22
New Settings File 4-22
Saving Settings Files 4-22
Opening Settings Files 4-23
RS-232 CONFIGURATION 4-23
ENGINE CONTROL UNIT (ECU) INTERFACE 4-23
PASSWORD PROTECTION 4-24
Changing Passwords 4-24
TERMINATING COMMUNICATION 4-24
EMBEDDED FIRMWARE 4-25
Updating the Firmware 4-25

Katolight Service - Master Repair Manual - Page 1874

Figures

Figure 4-1. Basler Electric Folder Contents 4-1
Figure 4-2. BESTCOMS Title and Version 4-1
Figure 4-3. Communication Initiation Screen 4-2
Figure 4-4. Password Dialog Box 4-2
Figure 4-5. Sensing Transformers Scree 4-3
Figure 4-6. Pre-Alarm Screen, Low Fuel-Low Cool-Batt. OverVolt Tab 4-4
Figure 4-7. Pre-Alarm Screen, Low Oil-Low Batt Volt-Weak Batt Volt Tab 4-5
Figure 4-8. Pre-Alarms Screen, Audible-Fuel Level Sender Tab 4-6
Figure 4-9. Pre-Alarms Screen, Maint. Interv.-Hi Cool Tab 4-6
Figure 4-10. Pre-Alarms Screen, CAN Bus-Diagnostic Trouble Codes 4-7
Figure 4-11. Alarms Screen, Hi Cool-Low Fuel-Low Oil Tab 4-8
Figure 4-12. Alarms Screen, Overspeed-Sender Fail Tab 4-9
Figure 4-13. Engine Cranking Screen 4-10
Figure 4-14. System Setting Screen 4-11
Figure 4-15. Settings Screen, Input Setup Tab 4-13
Figure 4-16. Settings Screen, Output Setup Tab 4-13
Figure 4-17. Generator Protection Screen, 51 Tab 4-14
Figure 4-18. Generator Protection Screen, 47 Tab 4-16
Figure 4-19. Generator Protection Scree, 27 Tab 4-16
Figure 4-20. Generator Protection Screen, 59 Tab 4-17
Figure 4-21. Generator Protection Screen, 81 Tab 4-18
Figure 4-22. Set Real Time Clock Screen 4-19
Figure 4-23. Programmable Senders Screen, Coolant Temperature Tab 4-20
Figure 4-24. Run Statistics Screen 4-21
Figure 4-25. Event Log Screen 4-22
Figure 4-26. Communication Configure Dialog Box 4-23
Figure 4-27. ECU Control Dialog Box 4-23
Figure 4-28. Change Password Dialog Box 4-24
Figure 4-29. Embedded Firmware Upgrade Dialog Box 4-25
Figure 4-30. Firmware File Information 4-26
Figure 4-31. File Transfer Status 4-26

Katolight Service - Master Repair Manual - Page 1875

SECTION 4 • BESTCOMS SOFTWARE

INTRODUCTION

DGC-500 BESTCOMS software provides a user-friendly communication link between the DGC-500 and the user. An IBM-compatible PC running BESTCOMS can be used to configure the following parameters.

- Sensing transformer ratios
- Programmable contact inputs and programmable outputs
- Engine and system settings
- Engine cranking type and settings
- Pre-alarm and alarm triggers
- Sender data for coolant temperature, oil pressure, and fuel level
- Communication settings

Within BESTCOMS, DGC-500 settings can be saved in a computer file and used later to configure other controllers with the same settings.

INSTALLATION

DGC-500 BESTCOMS software operates with IBM compatible personal computers (PCs) using Microsoft® Windows® 95 or later operating systems. The minimum recommended operating requirements are listed below.

- IBM compatible PC, 486DX2 or faster (100 MHz or higher microprocessor is recommended)
- One available serial port
- CD-ROM Drive

Installing DGC-500 BESTCOMS

BESTCOMS software contains a setup utility that installs the application on your PC. An uninstall utility is loaded with the program and can be used to remove BESTCOMS from your PC if desired. Use the following procedure to install DGC-500 BESTCOMS.

1. Insert the CD-ROM into the PC CD-ROM drive.
2. When the DGC-500 Setup and Documentation CD menu appears, click the Install button for the BESTCOMS PC Program. The setup utility automatically installs DGC-500 BESTCOMS on your PC.

When BESTCOMS is installed, a Basler Electric folder is added to the Windows® program menu. This folder is accessed by clicking the **Start** button and pointing to **Programs**. As illustrated in Figure 4-1, the Basler Electric folder contains icons for the DGC-500 BESTCOMS program and a utility to remove BESTCOMS.



Figure 4-1. Basler Electric Folder Contents

Connecting the DGC-500 and PC

Connect a communication cable between the rear RS-232 connector of the DGC-500 and the appropriate communication port of the PC. Refer to Figure 2-2 for the location of the DGC-500 RS-232 connector and Figure 5-4 for the required connections between the DGC-500 and a PC.

STARTING BESTCOMS

BESTCOMS is started by clicking the Windows® **Start** button, pointing to **Programs**, the **Basler Electric** folder, and then clicking the **DGC 500** icon. At startup, a dialog box with the program title and version number is displayed briefly (Figure 4-2). After this dialog box is displayed, the Sensing Transformers screen is displayed (Figure 4-5).



Figure 4-2. BESTCOMS Title and Version

Katolight Service - Master Repair Manual - Page 1876

Establishing Communication

Communication between BESTCOMS and the DGC-500 must be established before reading or changing settings. BESTCOMS screen settings are updated only after communication is opened or the communication settings have been changed.

Open the DGC-500 communication port by clicking **Communications** on the menu bar and clicking **Open**. When **Open** is selected, the Communication Initiation screen of Figure 4-3 appears. Select the appropriate communication port for your PC (Comm 1, 2, 3, or 4) and click the **Initialize** button. Information about altering the baud and parity settings is provided in the *RS-232 Configuration* sub-section. When the Password dialog box of Figure 4-4 appears, enter the appropriate password and click **OK**. The DGC-500 is delivered with the following default passwords.

- *DGC*. This limited-access password allows all DGC-500 settings to be read, but prevents any changes to settings.
- *DGC500*. This full-access password allows all DGC-500 settings to be read and allows all settings except Engine Runtime to be changed.
- *OEMLVL*. This OEM-access password allows all DGC-500 settings to be read and allows all settings to be changed. It also allows the DGC-500 embedded firmware to be upgraded.

Passwords are case-sensitive; all default passwords are upper-case. More information about passwords is provided in the Password Protection sub-section.

The Unit ID number displayed in the password dialog box indicates the identification number of the DGC-500. Information about changing the unit ID for polled communication is provided in the RS-232 Configuration sub-section.

Once the password is entered, a dialog box appears and confirms that communication was established and DGC-500 data was received by BESTCOMS.



Figure 4-3. Communication Initiation Screen

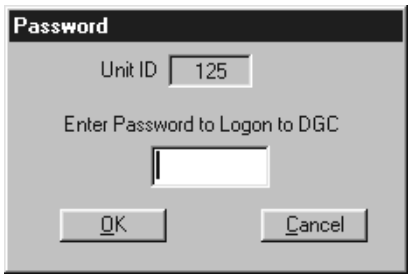

Figure 4-4. Password Dialog Box

CHANGING SETTINGS

DGC-500 settings are arranged into seven groups.

- Sensing Transformers
- Pre-Alarms
- Alarms
- Engine Cranking
- System
- Programmable Inputs and Outputs
- Generator Protection (optional)

Each setting group has a corresponding button (shown in Figure 4-5) that can be selected to access that group of settings. The seven setting groups can also be accessed by clicking **Screens** on the menu bar and then selecting the desired setting group from the list. Once a setting group is accessed, the individual settings of the group can be viewed and changed.

A setting is changed by clicking within the setting field and typing the new setting. If the new setting is outside the prescribed setting range, a dialog box showing the acceptable range appears when another setting field is accessed or when attempting to send the new setting to the DGC-500. The following paragraphs describe how settings are sent to the DGC-500.

SENDING AND RECEIVING SETTINGS

When communication is enabled, DGC-500 settings can be sent or received through BESTCOMS.

Sending Settings

Setting changes are sent to the DGC-500 by clicking the **Send Settings** button. This causes all settings to become the DGC-500 settings. Settings can also be sent to the DGC-500 by clicking **Communications** on the menu bar and clicking **Send to DGC**.

Receiving Settings

DGC-500 settings are retrieved by clicking the **Get Settings** button. This causes the current settings of the DGC-500 to be loaded into BESTCOMS. Settings can also be received from the DGC-500 by clicking **Communications** on the menu bar and clicking **Get from DGC**. Settings are also automatically retrieved when logging on.

SETTING DEFINITIONS

Each of the six setting groups has a corresponding BESTCOMS screen. The settings of each screen are categorized by one or more tabs. In the following paragraphs, settings are arranged and defined according to the organization of the BESTCOMS screens and tabs.

Sensing Transformers

The button with the transformer icon on it is clicked to access the Sensing Transformers screen. The Sensing Transformers screen can also be accessed by clicking **Screens** on the menu bar and clicking **Sensing Transformers**.

Sensing Transformer settings are shown in Figure 4-5 and are described in the following paragraphs.

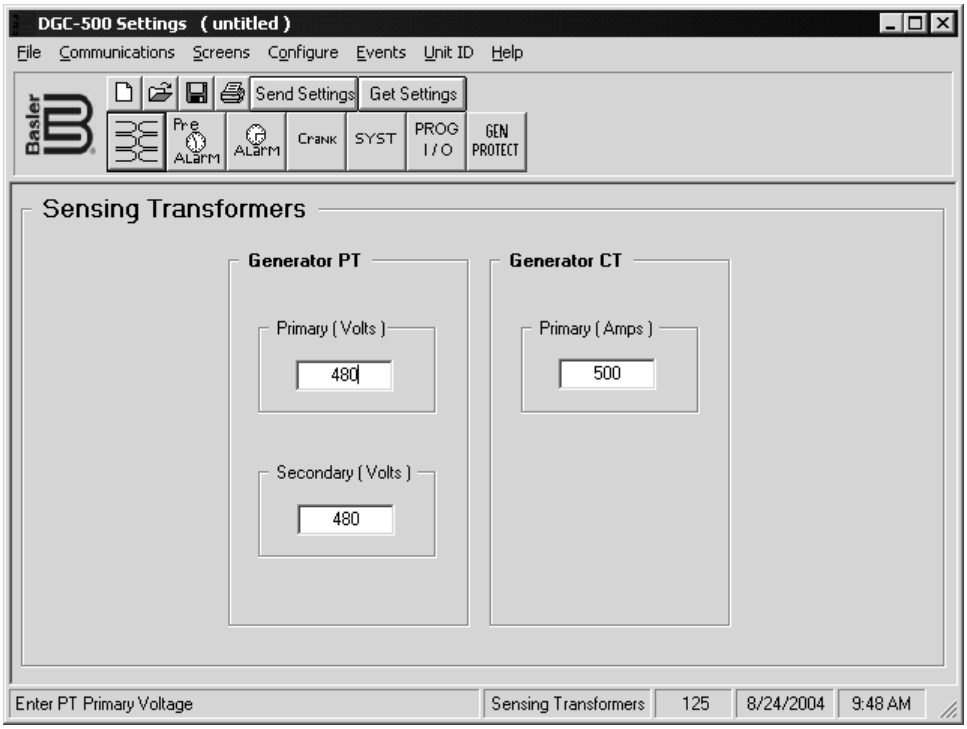

Figure 4-5. Sensing Transformers Screen

Generator PT - Primary (Volts). This setting selects the rating of the primary side of the transformer used to sense generator voltage. The primary voltage setting is adjustable from 1 to 999 Vac.

Generator PT - Secondary (Volts). This setting selects the rating of the secondary side of the transformer used to sense generator voltage. The secondary voltage setting is adjustable from 1 to 480 Vac.

Generator CT - Primary (Amps). This setting selects the rating of the primary side of the transformer used to sense generator current. The primary current setting is adjustable from 1 to 5,000 Aac.

Pre-Alarms

Click the **Pre Alarm** button to access the Pre-Alarms screen or click **Screens** on the menu bar and click **Pre-Alarm Settings**.

The Pre-Alarms screen consists of five tabs: Low Fuel-Low Cool-Batt. OverVolt., Low Oil-Low Batt Volt-Weak Batt Volt, Audible-Battery Charger-Fuel Level Sender, Maint. Interv.-Hi Cool, and CAN Bus - Diagnostic Trouble Codes.

Low Fuel-Low Cool-Batt. OverVolt Tab

The Low Fuel-Low Cool-Batt. OverVolt. tab settings of the Pre-Alarms screen are shown in Figure 4-6. Each tab setting is described in the following paragraphs.

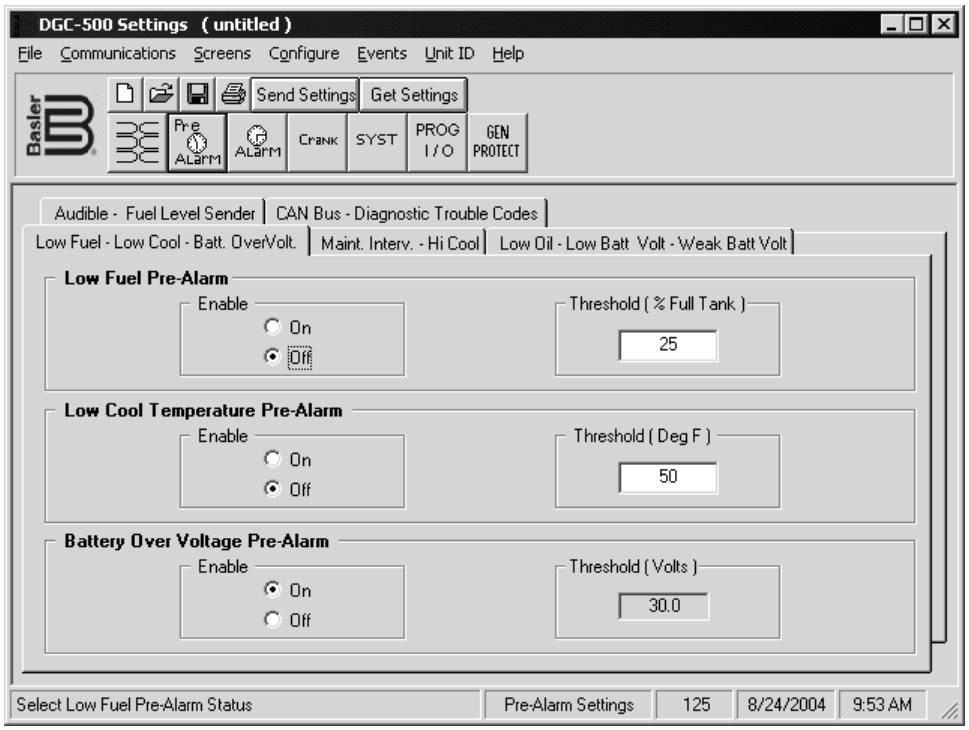

Figure 4-6. Pre-Alarm Screen, Low Fuel-Low Cool-Batt. OverVolt Tab

Low Fuel Pre-Alarm - Enable. This setting enables and disables annunciation of a low fuel pre-alarm. The Low Fuel Pre-Alarm is deactivated when certain fuel types are selected. The Programmable Senders sub-section provides more information about selecting the fuel type.

Low Fuel Pre-Alarm - Threshold (% Full Tank). This setting selects the fuel level that will trigger a low fuel pre-alarm. A threshold setting of 10 to 100 percent may be entered. The Low Fuel Pre-Alarm is deactivated when certain fuel types are selected. The Programmable Senders sub-section provides more information about selecting the fuel type.

Low Cool Temperature Pre-Alarm - Enable. This setting enables and disables annunciation of a low coolant temperature pre-alarm.

Low Cool Temperature Pre-Alarm - Threshold (Deg F). This setting selects the coolant temperature that will trigger a low coolant temperature pre-alarm. A threshold setting of 50 to 100 degrees Fahrenheit or 10 to 38 degrees Celsius may be entered.

Battery Over Voltage Pre-Alarm - Enable. This setting enables and disables annunciation of a battery overvoltage pre-alarm.

Battery Over Voltage Pre-Alarm - Threshold (Volts). This read-only setting displays the voltage level that will trigger a battery overvoltage pre-alarm. The threshold setting is fixed at 15 Vdc for systems operating at 12 Vdc and 30 Vdc for systems operating at 24 Vdc.

Low Oil-Low Batt Volt-Weak Batt Volt Tab

The Low Oil-Low Batt Volt-Weak Batt Volt Tab settings are shown in Figure 4-7. Each tab setting is described in the following paragraphs.

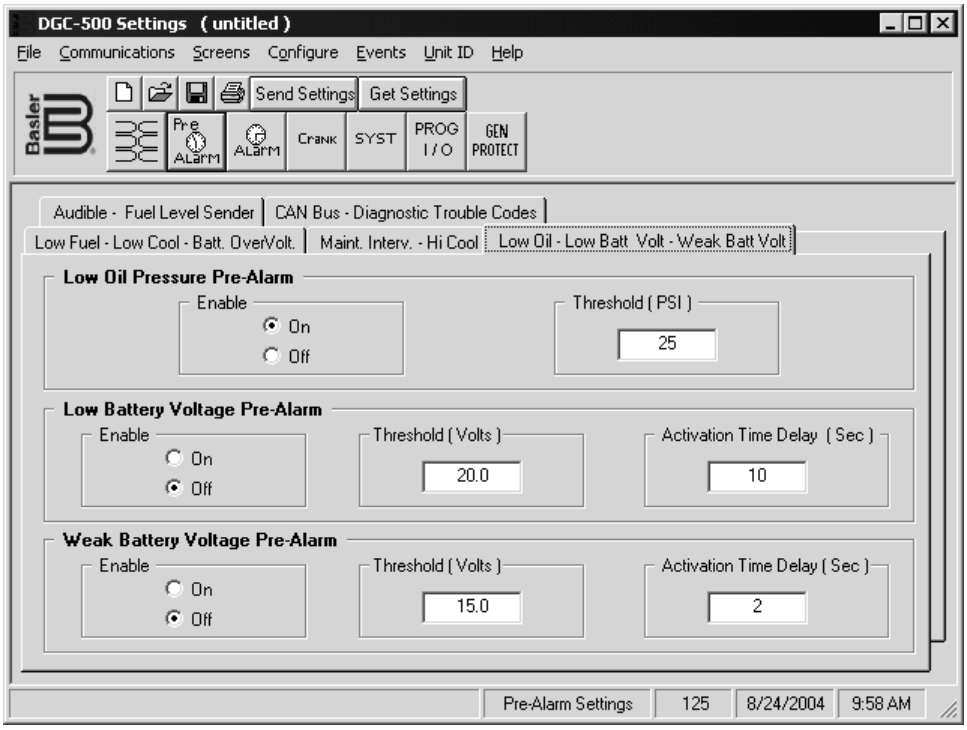

Figure 4-7. Pre-Alarm Screen, Low Oil-Low Batt Volt-Weak Batt Volt Tab

Low Oil Pressure Pre-Alarm - Enable. This setting enables and disables annunciation of a low oil pressure pre-alarm. A 10 second activation time delay prevents low oil pressure annunciation during engine startup.

Low Oil Pressure Pre-Alarm - Threshold (PSI). This setting selects the oil pressure level that will trigger a low oil pressure pre-alarm. A threshold setting of 3 to 150 psi or 20 to 1,035 kPa may be entered. A 10 second activation time delay prevents low oil pressure annunciation during engine startup.

Low Battery Voltage Pre-Alarm - Enable. This setting enables and disables annunciation of a low battery voltage pre-alarm.

Low Battery Voltage Pre-Alarm - Threshold (Volts). This setting selects the voltage level that will trigger a low battery voltage pre-alarm. The threshold setting is adjustable from 6 to 12 Vdc for 12 Vdc systems and 12 to 24 Vdc for 24 Vdc systems.

Low Battery Voltage Pre-Alarm - Activation Time Delay (Sec). This setting selects the time delay from when low battery voltage is detected until a pre-alarm is annunciated. A time delay of 1 to 10 seconds may be entered.

Weak Battery Voltage Pre-Alarm - Enable. This setting enables and disables annunciation of a weak battery voltage pre-alarm.

Weak Battery Voltage Pre-Alarm - Threshold (Volts). This setting selects the voltage level that will trigger a weak battery voltage pre-alarm. The threshold setting is adjustable from 4 to 8 Vdc for 12 Vdc systems and 8 to 16 Vdc for 24 Vdc systems.

Weak Battery Voltage Pre-Alarm - Activation Time Delay (Sec). This setting selects the time delay from when weak battery voltage is detected until a pre-alarm is annunciated. A time delay of 1 to 10 seconds may be entered.

Audible-Fuel Level Sender Tab

The Audible-Battery Charger-Fuel Level Sender Tab settings are shown in Figure 4-8. Each tab setting is described in the following paragraphs.

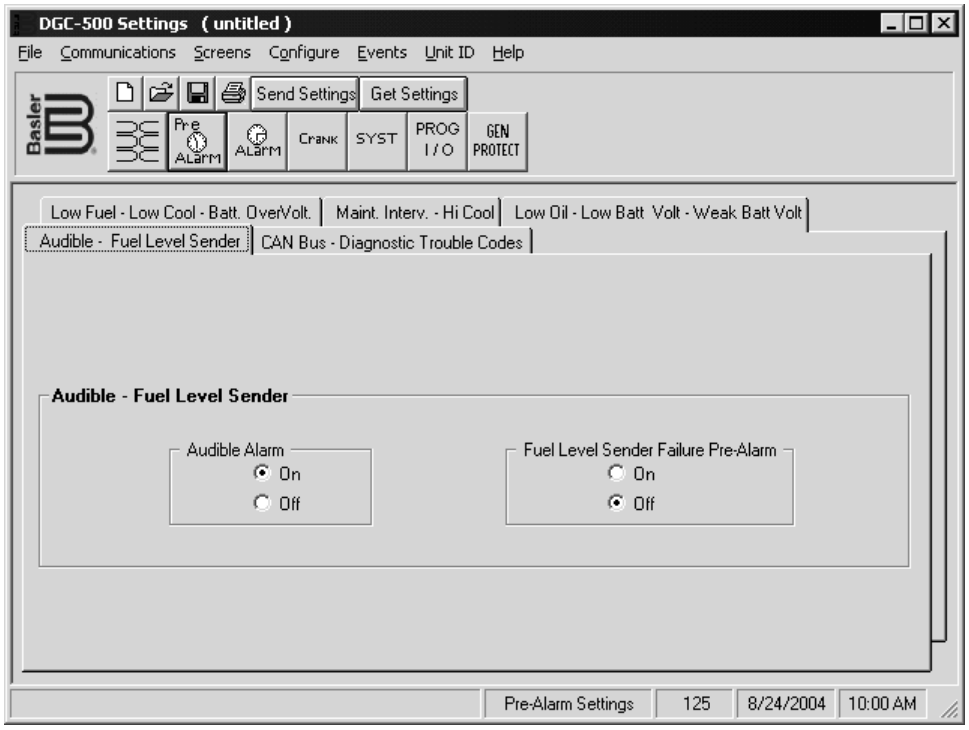

Figure 4-8. Pre-Alarms Screen, Audible-Fuel Level Sender Tab

Audible Alarm. This setting enables and disables an audible pre-alarm and alarm annunciation.

Fuel Level Sender Failure Pre-Alarm. This setting enables and disables annunciation of a fuel level sender failure pre-alarm.

Maint. Interv.-Hi Cool Tab

The Maint. Interv.-Hi Cool Tab settings are shown in Figure 4-9. Each tab setting is described in the following paragraphs.

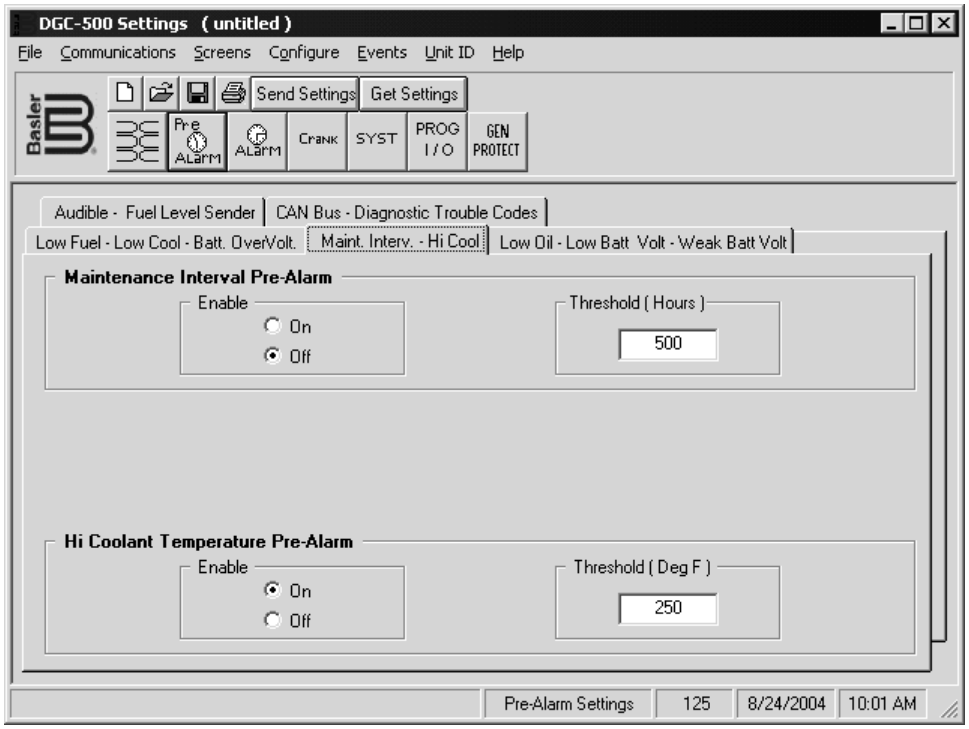

Figure 4-9. Pre-Alarms Screen, Maint. Interv.-Hi Cool Tab

Katolight Service - Master Repair Manual - Page 1881

Maintenance Interval Pre-Alarm - Enable. This setting enables and disables annunciation of a maintenance interval pre-alarm.

Maintenance Interval Pre-Alarm - Threshold (Hours). This setting selects the length of the maintenance interval. An interval of zero to 5,000 hours may be selected. Refer to the *Maintenance Interval Timer Reset* paragraph of the *System* sub-section for information about resetting the Maintenance Interval Pre-Alarm.

Hi Coolant Temperature Pre-Alarm - Enable. This setting enables and disables annunciation of a high coolant temperature pre-alarm. A 60 second activation delay prevents a Hi Coolant Temperature Pre-Alarm from occurring at engine startup.

Hi Coolant Temperature Pre-Alarm Threshold (Deg F). This setting selects the coolant temperature that will trigger a high coolant temperature pre-alarm. A threshold setting of 100 to 280 degrees Fahrenheit or 38 to 138 degrees Celsius may be entered. A 60 second activation delay prevents a Hi Coolant Temperature Pre-Alarm from occurring at engine startup.

CAN Bus-Diagnostic Trouble Codes

The CAN Bus-Diagnostic Trouble Codes Tab settings are shown in Figure 4-10. Each tab setting is described in the following paragraphs.

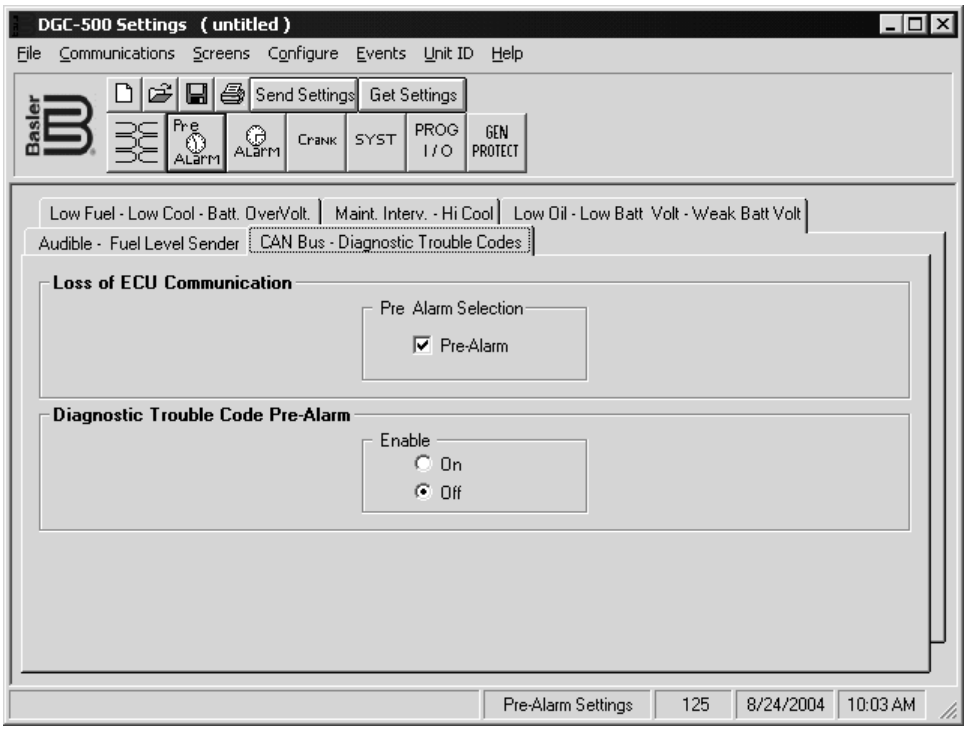

Figure 4-10. Pre-Alarms Screen, CAN Bus-Diagnostic Trouble Codes

Loss of ECU Communication - Pre-Alarm Selection. This setting enables annunciation of a pre-alarm when communication between the DGC-500 and engine control unit (ECU) is interrupted.

Diagnostic Trouble Code Pre-Alarm. This setting enables and disables annunciation of a diagnostic trouble code (DTC) pre-alarm. The DGC-500 receives unsolicited DTCs from the ECU.

Alarms

Click the **Alarm** button to access the Alarms screen or click **Screens** on the menu bar and click **Alarm Settings**.

The Alarms screen consists of two tabs: Hi Cool-Low Fuel-Low Oil and Overspeed-Sender Fail.

Hi Cool-Low Fuel-Low Oil Tab

The Hi Cool-Low Fuel-Low Oil Tab settings are shown in Figure 4-11. Each tab setting is described in the following paragraphs.

Katolight Service - Master Repair Manual - Page 1882

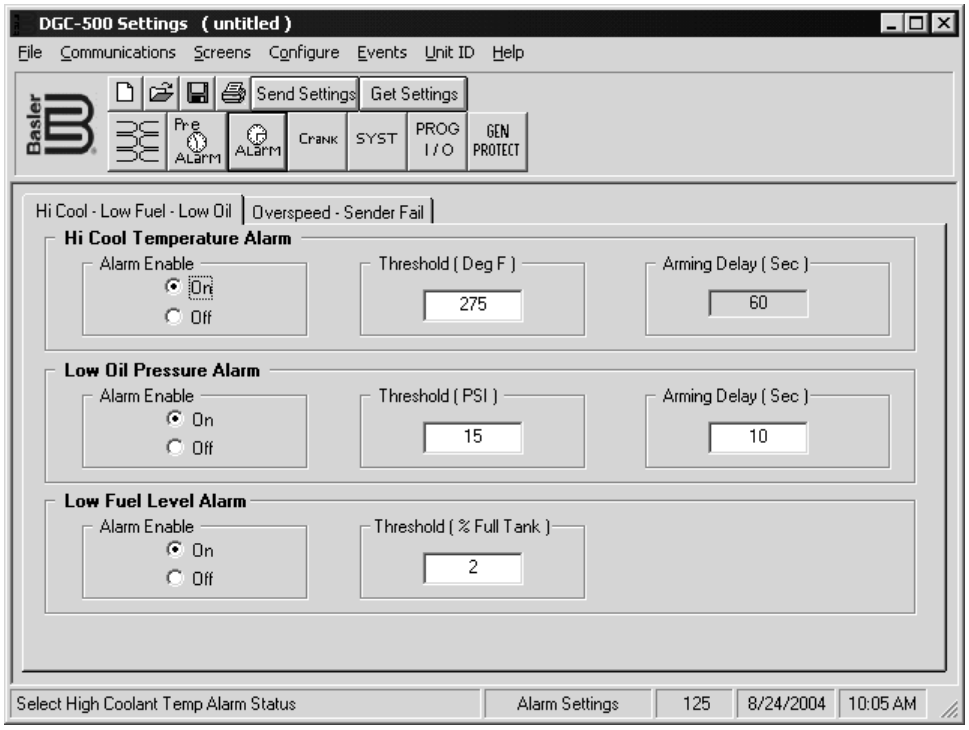

Figure 4-11. Alarms Screen, Hi Cool-Low Fuel-Low Oil Tab

Hi Cool Temperature Alarm - Alarm Enable. This setting enables and disables annunciation of a high coolant temperature alarm and engine shutdown. A 60 second activation delay prevents a Hi Coolant Temperature Alarm from occurring at engine startup.

Hi Cool Temperature Alarm - Threshold (Deg F). This setting selects the coolant temperature that will trigger a high coolant temperature alarm. A threshold setting of 100 to 280 degrees Fahrenheit or 38 to 138 degrees Celsius may be entered. A 60 second activation delay prevents a Hi Coolant Temperature Alarm from occurring at engine startup.

Hi Cool Temperature Alarm - Arming Delay (Sec). This read-only setting displays the time delay between when high coolant temperature is detected and an alarm is annunciated and the engine is shut down. The arming delay is fixed at 60 seconds.

Low Oil Pressure Alarm - Alarm Enable. This setting enables and disables annunciation of a low oil pressure alarm and engine shutdown. A 10 second activation time delay prevents low oil pressure annunciation during engine startup.

Low Oil Pressure Alarm - Threshold (PSI). This setting selects the oil pressure level that will trigger a low oil pressure alarm and engine shutdown. A threshold of 3 to 150 psi or 20 to 1,035 kPa may be entered. A 10 second activation time delay prevents low oil pressure annunciation during engine startup.

Low Oil Pressure Alarm - Arming Delay (Sec). This setting selects the time delay between when low oil pressure is detected and an alarm is annunciated and the engine is shut down. A time delay of 5 to 15 seconds may be entered. A 10 second activation time delay prevents low oil pressure annunciation during engine startup.

Low Fuel Level Alarm - Alarm Enable. This setting enables and disables alarm annunciation and engine shutdown for a low fuel level.

Low Fuel Level Alarm - Threshold (% Full Tank). This setting selects the fuel level that will trigger a low fuel level alarm. A threshold of zero to 100 percent may be entered.

Overspeed-Sender Fail Tab

The Overspeed-Sender Fail Tab settings are shown in Figure 4-12. Each tab setting is described in the following paragraphs.

Overspeed Alarm - Alarm Enable. This setting enables and disables alarm annunciation and engine shutdown for an overspeed condition.

Katolight Service - Master Repair Manual - Page 1883

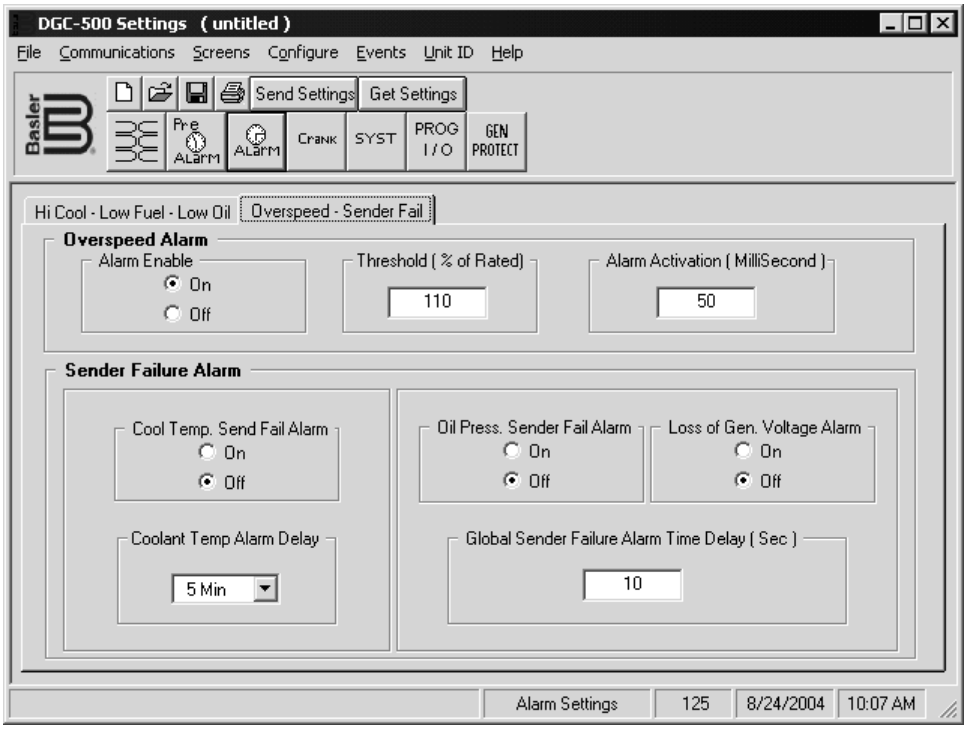

Figure 4-12. Alarms Screen, Overspeed-Sender Fail Tab

Overspeed Alarm - Threshold (% of Rated). This setting selects the percentage of overspeed that triggers an overspeed alarm and engine shutdown. The threshold is adjustable from 105 to 140 % of nominal speed.

Overspeed Alarm - Alarm Activation (MilliSecond). This setting adjusts the time delay from when an overspeed alarm condition is detected until it is annunciated and the engine is shut down. A time delay of zero to 500 milliseconds may be entered.

Sender Failure Alarm - Cool Temp. Send Fail Alarm. This setting enables and disables alarm annunciation and engine shutdown for a coolant temperature sender failure.

Sender Failure Alarm - Coolant Temp Alarm Delay. This setting adjusts the time delay from when a coolant temperature sender failure is detected until it is annunciated and the engine is shut down. A time delay of 5, 10, 15, 20, 25, or 30 minutes may be selected.

Sender Failure Alarm - Oil Press. Sender Fail Alarm. This setting enables and disables alarm annunciation and engine shutdown for an oil pressure sender failure. An oil pressure sender failure alarm is annunciated and engine shutdown is initiated when the Global Sender Failure Alarm Time Delay expires.

Sender Failure Alarm - Loss of Gen. Voltage Alarm. This setting enables and disables alarm annunciation and engine shutdown for a loss of generator voltage. A loss of generator voltage alarm is annunciated when the generator voltage decreases below 1.5 Vac and the Global Sender Failure Alarm Time Delay expires. This setting does not disable a Sender Failure Alarm for the speed signal source when generator frequency is selected as the speed signal source.

Sender Failure Alarm - Global Sender Failure Alarm Time Delay (Sec). This setting selects the time delay between when an oil pressure sender failure, loss of generator voltage failure, or MPU sender failure is detected and alarm annunciation and engine shutdown.

Engine Cranking

Click the Crank button to access the Engine Cranking screen or click **Screens** on the menu bar and click **Crank Settings**.

Engine Cranking settings are shown in Figure 4-13 and are described in the following paragraphs.

Cranking Style. This setting selects the cranking method as either continuous or cycle.

Crank Disconnect Limit (% of Rated). This setting selects the percentage of rated engine speed at which cranking is terminated. A disconnect limit of 10 to 100 percent may be entered.

Katolight Service - Master Repair Manual - Page 1884

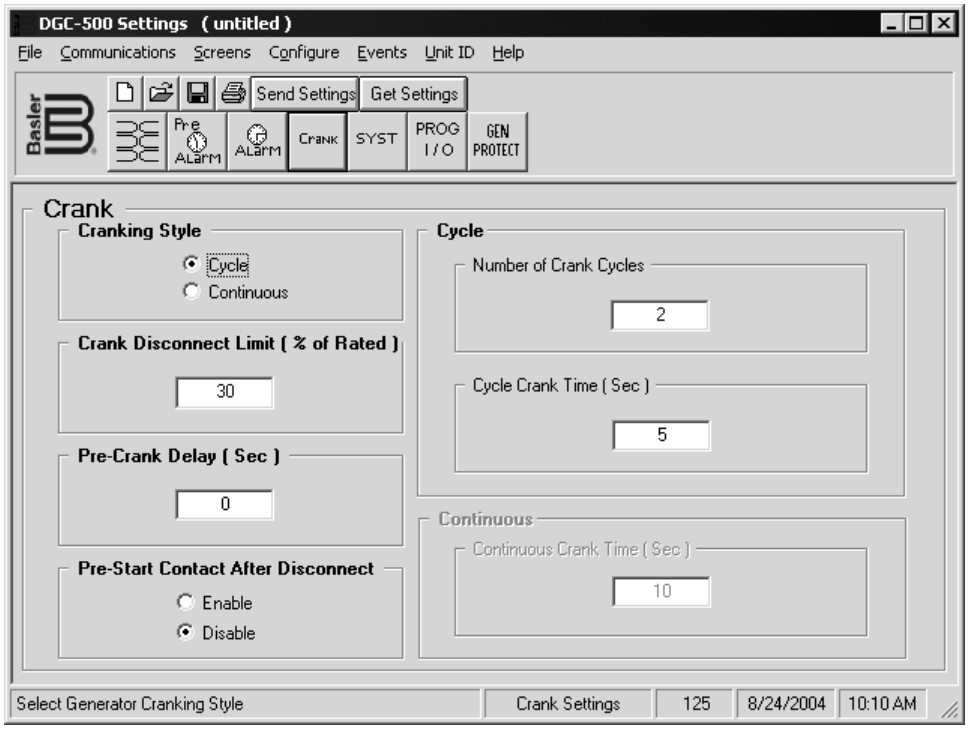

Figure 4-13. Engine Cranking Screen

Pre-Crank Delay (Sec). This setting adjusts the time delay between initiating engine starting and beginning engine cranking. A delay of zero to 30 seconds may be entered.

Pre-Start Contact After Disconnect. This setting selects whether or not the pre-start contact remains closed after disconnect occurs.

Cycle - Number of Crank Cycles. This setting, available only if cycle cranking is selected, selects the number of engine cranking attempts before an overcrank condition occurs and cranking is terminated. The crank cycles setting range is 1 to 7.

Cycle - Cycle Crank Time (Sec). This setting, available only if cycle cranking is selected, controls the duration of each cranking cycle. Each cranking period is separated by a resting period of equal length. A crank time of 5 to 15 may be entered.

Continuous - Continuous Crank Time (Sec). This setting, available only if continuous cranking is selected, selects the duration of a single engine cranking attempt before an overcrank condition occurs. A continuous crank time of 1 to 60 seconds may be entered.

System

Click the **SYST** button to access the System Settings screen or click **Screens** on the menu bar and click **System Settings**.

System settings are shown in Figure 4-14 and are described in the following paragraphs.

Genset's kW Rating. The generator power rating is entered in this field. A genset kW rating of 5 to 9,999 may be entered.

Cool Down Time. This setting selects the time delay time for any of the following three conditions.

- The generator load is removed and engine shutdown is permitted.
- The Auto Transfer Switch is opened while operating in Auto mode and engine shutdown occurs.
- A remote shutdown is initiated and engine shutdown occurs.

A cool-down time of zero (0) to 60 minutes may be entered.

Rated Engine RPM. This setting selects the rated rotating speed of the engine. A value of 750 to 3,600 rpm may be entered.

Maintenance Interval Timer Reset. Selecting this checkbox terminates the maintenance interval pre-alarm and resets the maintenance interval timer back to the programmed value. The Send Settings button must be clicked for the reset to take effect.

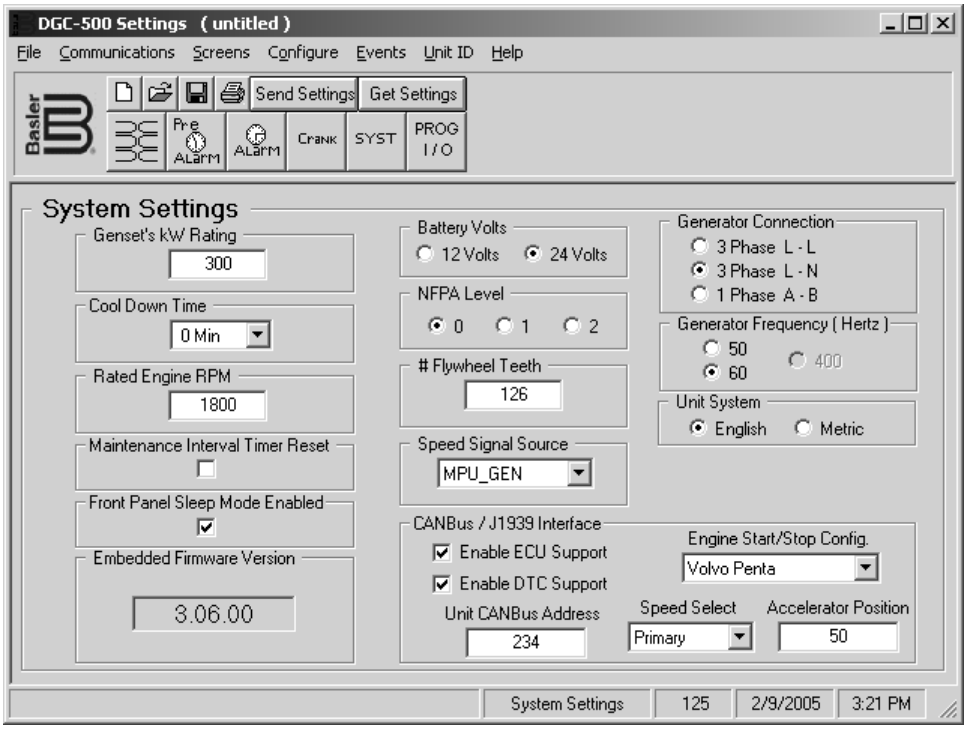

Figure 4-14. System Setting Screen

Front Panel Sleep Mode Enabled. Selecting this checkbox enables the activation of Sleep mode when the DGC-500 is in Off mode for more than 15 minutes. When Sleep mode is active, the front panel LEDs, LCD, and LCD backlight are turned off to reduce power consumption.

Battery Volts. This setting selects either 12 Vdc or 24 Vdc as the starting battery nominal voltage.

NFPA Level. This setting selects whether or not NFPA requirements are in effect. If NFPA (National Fire Prevention Association) compliance is not required, a setting of zero (0) can be selected to disable the feature. Selecting NFPA level one (1) or two (2) affects DGC-500 operation in the following ways.

- The number of crank cycles is fixed at 3.
- Crank cycle time is fixed at 15 seconds.
- Continuous crank time is fixed at 45 seconds.
- The low coolant temperature pre-alarm setting is fixed at 70 F.

 # Flywheel Teeth. This setting selects the number of teeth on the engine flywheel. A value of 50 to 500 may be entered.

Speed Signal Source. This setting selects from three sources for obtaining the engine speed. The speed signal source can be obtained from the magnetic pickup (MPU), generator frequency, or derived from both the MPU and generator frequency. When both the MPU and generator frequency are selected as the speed signal source, the MPU has priority. If both MPU and generator frequency are selected and the MPU fails, generator frequency is used and a non-programmable MPU sender failure pre-alarm is annunciated.

When the CANBus interface is used, the speed signal source setting must be set at MPU or MPU_GEN. This allows the DGC-500 to receive the engine speed data sent by the ECU via the J1939 protocol.

Embedded Firmware Version. This read-only field displays the firmware version of the DGC-500.

Generator Connection. This setting selects the configuration of the generator voltage sensing circuitry. Either three-phase line-to-line, three-phase line-to-neutral, or single-phase A-phase to B-phase sensing may be selected.

Generator Frequency. This setting selects either 50 hertz or 60 hertz as the nominal generator frequency.

Unit System. This setting selects either the English or Metric unit system for displaying the oil pressure and coolant temperature parameters in BESTCOMS, the DGC-500 HMI, and the optional Remote Annunciation Display Panel (RDP-110).

CANBus/J1939 Interface - Enable ECU Support. This setting enables and disables the DGC-500 CAN interface. When enabled, the CAN interface allows the DGC-500 to communicate with the engine control unit (ECU). This setting must be enabled in order to enable DTC support.

CANBus/J1939 Interface - Enable DTC Support. This setting enables and disables the viewing of diagnostic trouble codes (DTCs) reported by the ECU. Both the Enable ECU Support and Enable DTC Support settings must be enabled to view DTCs.

CANBus/J1939 Interface - Unit CANBus Address. This setting selects the address to be used by the DGC-500 for J1939 communication. A value of 0 to 253 may be entered.

CANBus/J1939 Interface - Engine Start/Stop Config. This setting selects one of two engine start/stop configurations. Selecting Volvo Penta configures the DGC-500 for starting and stopping of the engine using the J1939 communication interface. (The Enable ECU Support setting must be enabled.) Selecting Not Configured disables this feature.

CANBus/J1939 Interface - Speed Select. This setting tells the Volvo Penta EDC III to operate the engine at the primary or secondary base speed. If the engine is configured by Volvo for 60 hertz applications, the primary base speed is 1,800 rpm and the secondary base speed is 1,500 rpm. If the engine is configured by Volvo for 50 hertz applications, the primary base sped is 1,500 rpm and the secondary base speed is 1,800 rpm. This setting is enabled only when Volvo Penta is selected as the Start/Stop Config. Setting.

CANBus/J1939 Interface - Accelerator Position. This setting, expressed as a percentage, tells the Volvo Penta EDC III where to set the engine speed (trim) relative to the base speed. The range of the setting is the base speed ±120 rpm. A setting of 0% will cause the engine to run at 120 rpm below the base speed, a setting of 50% will cause the engine to run at the base speed, and a setting of 100% will cause the engine to run at 120 rpm above the base speed. The Accelerator Position setting is linear with a gain of 2.4 rpm/%. This setting in not saved in nonvolatile memory and defaults back to 50% after DGC-500 operation power is cycled. This setting is enabled only when Volvo Penta is selected as the Start/Stop Config. setting.

Programmable Inputs and Outputs

Click the **PROG I/O** button to access the Programmable Inputs and Outputs screen or click **Screens** on the menu bar and click **Input/Output Settings**.

The Programmable Inputs and Outputs screen consists of two tabs: Input Setup and Output Setup.

Input Setup Tab

The Input Setup tab settings of the Programmable Inputs and Outputs screen consist of three identical groups of settings for each of the three programmable inputs. Tab settings are shown in Figure 4-15. Each tab setting is described in the following paragraphs.

Programmable Input - Function. This setting selects the function type that is used to trigger the corresponding programmable input. The functions available for triggering a programmable input are listed below.

- Auto Transfer Switch
- Auxiliary Input
- Battery Charger Fail
- Fuel Leak Detect
- Low Coolant Level
- No Function
- Single-Phase Override

Programmable Input - Alarm/Pre-Alarm. Either of these check boxes can be selected to annunciate an alarm or pre-alarm when the selected function triggers the programmable input. Alarm or pre-alarm annunciation is available only when one the following functions are selected: Auxiliary Input, Battery Charger Fail, Fuel Leak Detect, or Low Coolant Level.

Programmable Input - Auxiliary Input Label. This setting field is active only when Auxiliary Input is selected as the programmable input function. An user-assigned label (eight characters, maximum) can be entered for the corresponding programmable input.

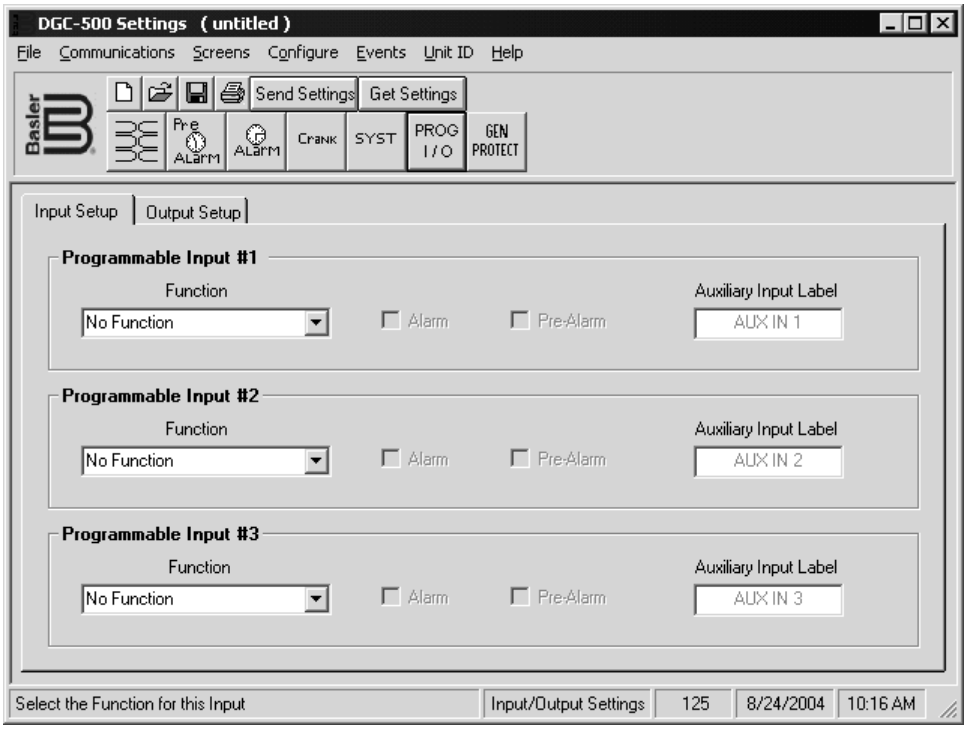

Figure 4-15. Settings Screen, Input Setup Tab

Output Setup Tab

The Output Setup Tab settings of the Settings screen are shown in Figure 4-16. (Not all settings are visible in the illustration.) Each tab setting is described in the following paragraphs.

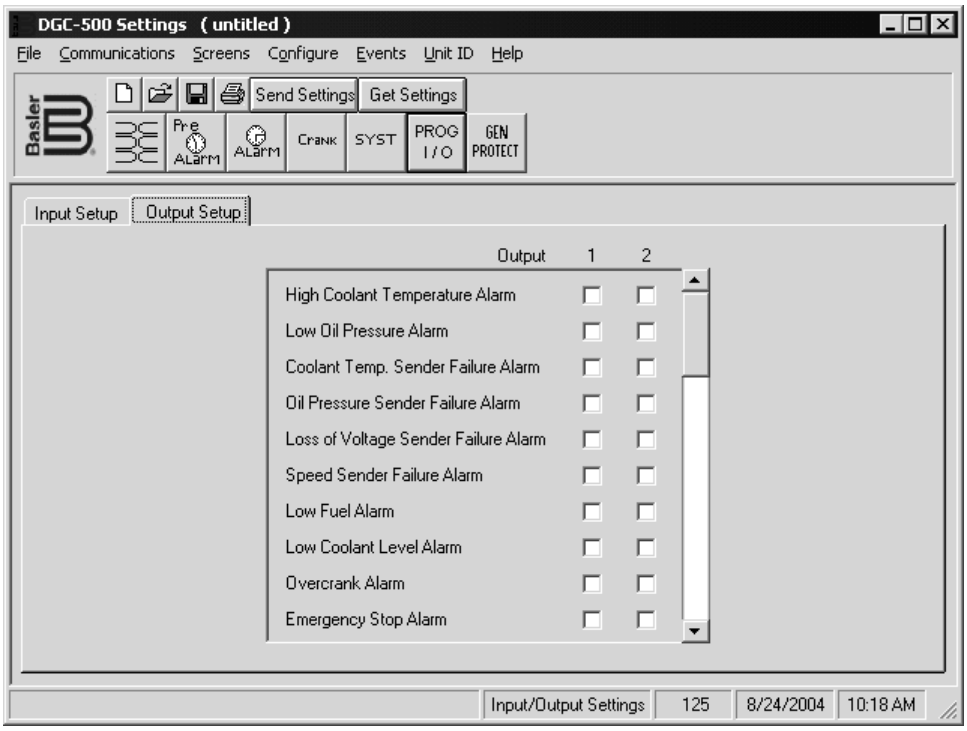

Figure 4-16. Settings Screen, Output Setup Tab

The Output Setup tab consists of a list of pre-alarms, alarms, and conditions that can be assigned to close either Programmable Output 1 or 2. An output selected by clicking the checkbox in the appropriate row and column. The following pre-alarms, alarms, and conditions can be assigned to one of the two programmable outputs.

- Battery Charger Failure Alarm
- Battery Charger Failure Pre-alarm
- Battery Overvoltage Pre-alarm
- Coolant Temperature Sender Failure Alarm
- Cooldown Timer Active
- Emergency Stop Alarm
- EPS Supplying Load
- Fuel Leak Alarm
- Fuel Leak Pre-alarm
- Fuel Sender Failure Pre-alarm
- High Coolant Temperature Pre-alarm
- High Coolant Temperature Alarm
- Loss of Voltage Sender Failure Alarm
- Low Battery Voltage Pre-alarm
- Low Coolant Level Pre-alarm
- Low Coolant Level Alarm
- Low Coolant Temperature Pre-alarm
- Low Fuel Alarm
- Low Fuel Pre-alarm
- Low Oil Pressure Alarm
- Low Oil Pressure Pre-alarm
- Speed Sender Failure Alarm
- Oil Pressure Sender Failure Alarm
- Overcrank Alarm
- Overcurrent (51)
- Overfrequency (81O)
- Overspeed Alarm
- Overvoltage (59)
- Phase Imbalance (47)
- Pre-start Condition in Effect
- Programmable Input 1 Closed
- Programmable Input 2 Closed
- Programmable Input 3 Closed
- Scheduled Maintenance Pre-alarm
- Switch Not in Auto
- Underfrequency (81U)
- Undervoltage (27)
- Weak Battery Voltage Pre-alarm

Generator Protection

Multifunction generator protection is provided on DGC-500 controllers with a style number of XXX1.

Click the **Gen Protect** button to access the Generator Protection screen or click **Screens** on the menu bar and click **Generator Protection**. The Generator Protection screen consists of five tabs: 51, 47, 27, 59, and 81.

51 Tab

The 51 tab contains the time overcurrent settings shown in Figure 4-17 and described in the following paragraphs.

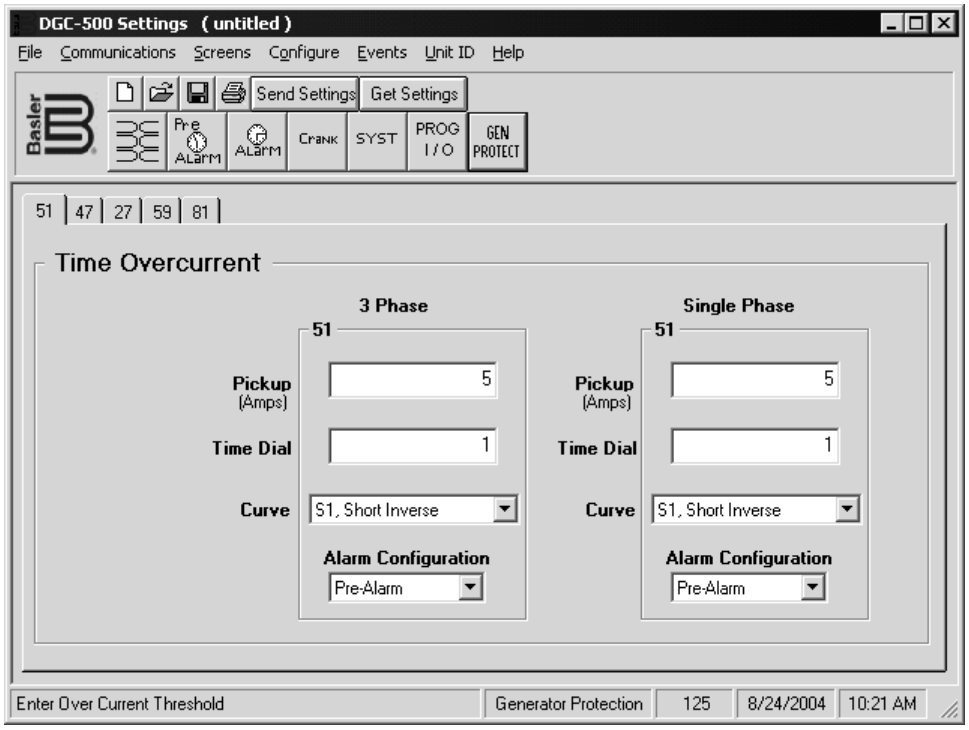

Figure 4-17. Generator Protection Screen, 51 Tab

3 Phase – 51 Pickup. This setting selects the overcurrent pickup threshold for three-phase generator connections. A 51 Pickup setting of 0.18 to 1.18 Aac (style X1X1) or 0.9 to 7.75 Aac (style X5X1) may be entered.

3 Phase – 51 Time Dial. When three-phase generator connections are used, this setting selects the time delay from when an overcurrent condition is detected and an overcurrent annunciation (trip) occurs. The 51 Time Dial setting operates in conjunction with the 51 Curve setting. When the F, Fixed Time curve setting is selected, the 51 Time Dial setting is adjustable from 0 to 30 seconds and determines the overcurrent time delay with no regard to the generator current level. When one of the 16 inverse curve settings are selected, the 51 Time Dial setting (adjustable from a multiplier of 0 to 9.9) along with the level of measured generator current determines the overcurrent time delay.

3 Phase –51 Curve. When three-phase generator connections are used, the 51 Curve setting operates in conjunction with the 51 Time Dial setting. Selecting a 51 Curve setting of F, Fixed Time causes the 51 Time Dial setting to determine the overcurrent time delay with no regard to the generator current level. When one of the 16 inverse curve settings are selected, the 51 Time Dial setting, along with the level of the measured generator current, determines the overcurrent time delay. The overcurrent curve setting selections are listed below.

- A, Standard Inverse
- B, Very Inverse
- C, Extremely Inverse
- D, Definite
- E1, Extremely Inverse
- E2, Extremely Inverse
- F, Fixed Time
- G, Long Inverse
- I1, Inverse
- I2, Inverse
- L1, Long Inverse
- L2, Long Inverse
- M, Moderately Inverse
- S1, Short Inverse
- S2, Short Inverse
- V1, Very Inverse
- V2, Very Inverse

3 Phase – 51 Alarm Configuration. This setting selects how a three-phase overcurrent condition is annunciated. An overcurrent condition can be configured to trigger a pre-alarm, alarm, or no annunciation.

Single Phase – 51 Pickup. This setting selects the overcurrent pickup threshold for single-phase generator connections. A 51 Pickup setting of 0.18 to 1.18 Aac (style X1X1) or 0.9 to 7.75 Aac (style X5X1) may be entered.

Single Phase – 51 Time Dial. When single-phase generator connections are used, this setting selects the time delay from when an overcurrent condition is detected and an overcurrent annunciation (trip) occurs. The 51 Time Dial setting operates in conjunction with the 51 Curve setting. When the F, Fixed Time curve setting is selected, the 51 Time Dial setting is adjustable from 0 to 30 seconds and determines the overcurrent time delay with no regard to the generator current level. When one of the 16 inverse curve settings are selected, the 51 Time Dial setting (adjustable from a multiplier of 0 to 9.9) along with the level of measured generator current determines the overcurrent time delay.

Single Phase – 51 Curve. When single-phase generator connections are used, the 51 Curve setting operates in conjunction with the 51 Time Dial setting. Selecting a 51 Curve setting of F, Fixed Time causes the 51 Time Dial setting to determine the overcurrent time delay with no regard to the generator current level. When one of the 16 inverse curve settings are selected, the 51 Time Dial setting, along with the level of the measured generator current, determines the overcurrent time delay. The overcurrent curve setting selections are listed below.

- A, Standard Inverse
- B, Very Inverse
- C, Extremely Inverse
- D, Definite
- E1, Extremely Inverse
- E2, Extremely Inverse
- F, Fixed Time
- G, Long Inverse
- I1, Inverse
- I2, Inverse
- L1, Long Inverse
- L2, Long Inverse
- M, Moderately Inverse
- S1, Short Inverse
- S2, Short Inverse
- V1, Very Inverse
- V2, Very Inverse

Single Phase – 51 Alarm Configuration. This setting selects how a single-phase overcurrent condition is annunciated. An overcurrent condition can be configured to trigger a pre-alarm, alarm, or no annunciation.

47 Tab

The 47 tab contains the phase imbalance settings shown in Figure 4-18 and described in the following paragraphs.

Katolight Service - Master Repair Manual - Page 1890

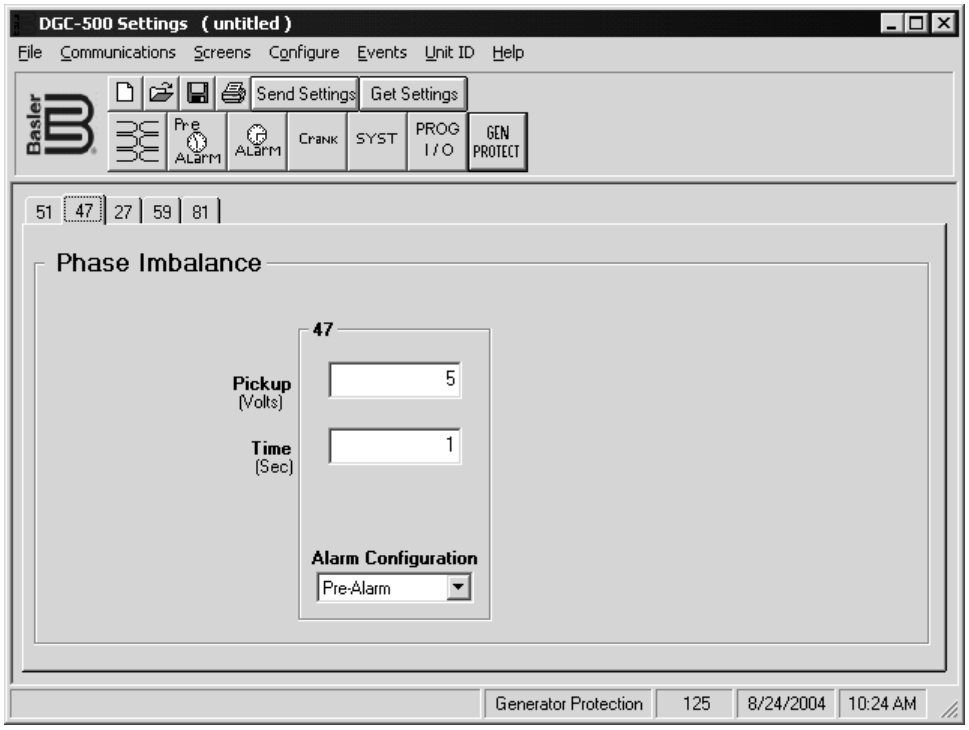

Figure 4-18. Generator Protection Screen, 47 Tab

47 – Pickup. This setting selects the level of voltage imbalance, between generator phases, that will cause a phase imbalance pickup. A Pickup setting of 5 to 100 Vac may be entered.

47 – Time. This setting selects the length of time between when a phase imbalance is detected and annunciated. A Time setting of 0 to 30 seconds may be entered.

47 – Alarm Configuration. This setting selects how a phase imbalance condition is annunciated. A phase imbalance condition can be configured to trigger a pre-alarm, alarm, or no annunciation.

27 Tab

the 27 tab contains the undervoltage settings shown in Figure 4-19 and described in the following paragraphs.

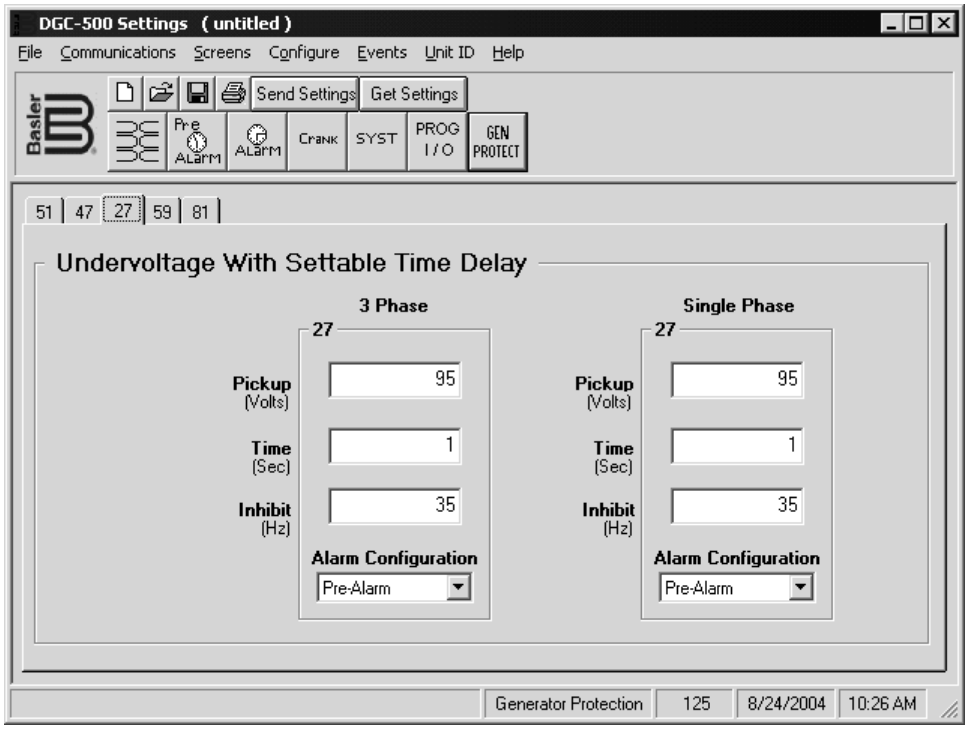

Figure 4-19. Generator Protection Scree, 27 Tab

3 Phase – 27 Pickup. This setting selects the undervoltage pickup threshold for three-phase generator connections. A three-phase undervoltage pickup occurs when the average of the three-phase voltage decreases below the 27 Pickup setting. A three-phase 27 Pickup setting of 70 to 576 Vac may be entered.

3 Phase – 27 Time. This setting selects the length of time between when a three-phase undervoltage condition is detected and an undervoltage annunciation (trip) occurs. A three-phase 27 Time setting of 0 to 30 seconds may be entered.

3 Phase – 27 Inhibit. This setting selects the level of underfrequency that will inhibit the three-phase undervoltage protection function. A three-phase 27 Inhibit setting of 20 to 400 hertz may be entered.

3 Phase – 27 Alarm Configuration. This setting selects how a three-phase undervoltage condition is annunciated. An undervoltage condition can be configured to trigger a pre-alarm, alarm, or no annunciation.

Single Phase – 27 Pickup. This setting selects the undervoltage pickup threshold for single-phase generator connections. A single-phase undervoltage pickup occurs when the average of the line-to-line voltage decreases below the 27 Pickup setting. A single-phase 27 Pickup setting of 70 to 576 Vac may be entered.

Single Phase – 27 Time. This setting selects the length of time between when a single-phase undervoltage condition is detected and an undervoltage annunciation (trip) occurs. A single-phase 27 Time setting of 0 to 30 seconds may be entered.

Single Phase – 27 Inhibit. This setting selects the level of underfrequency that will inhibit the single-phase undervoltage protection function. A single-phase 27 inhibit setting of 20 to 400 hertz may be entered.

Single Phase – 27 Alarm Configuration. This setting selects how a single-phase undervoltage condition is annunciated. An undervoltage condition can be configured to trigger a pre-alarm, alarm, or no annunciation.

59 Tab

The 59 tab contains the overvoltage settings shown in Figure 4-20 and described in the following paragraphs.

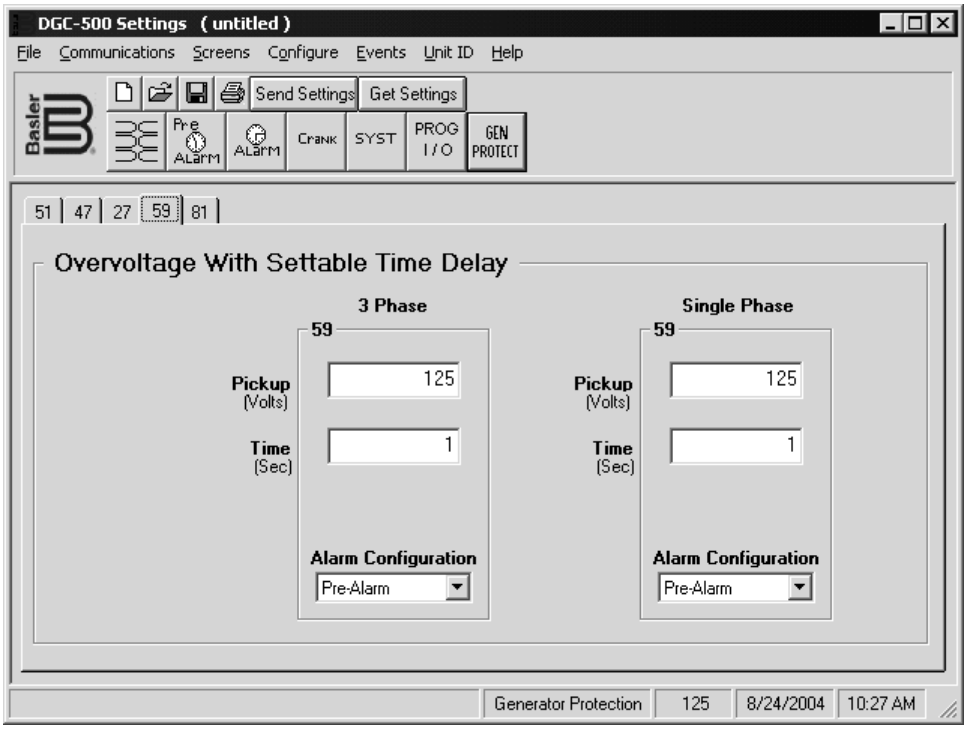

Figure 4-20. Generator Protection Screen, 59 Tab

3 Phase – 59 Pickup. This setting selects the overvoltage pickup threshold for three-phase generator connections. A three-phase overvoltage pickup occurs when the average of the three-phase voltage increases above the 59 pickup setting. a 59 Pickup setting of 70 to 576 Vac may be entered.

3 Phase – 59 Time. This setting selects the length of time between when a three-phase overvoltage condition is detected and an overvoltage annunciation (trip) occurs. A three-phase 59 Time setting of 0 to 30 seconds may be entered.

3 Phase – 59 Alarm Configuration. This setting selects how a three-phase overvoltage condition is annunciated. An overvoltage condition can be configured to trigger a pre-alarm, alarm, or no annunciation.

Single Phase – 59 Pickup. This setting selects the overvoltage pickup threshold for single-phase generator connections. A single-phase overvoltage pickup occurs when the average of the line-to-line voltage increases above the 59 pickup setting. a 59 Pickup setting of 70 to 576 Vac may be entered.

Single Phase – 59 Time. This setting selects the length of time between when a single-phase overvoltage condition is detected and an overvoltage annunciation (trip) occurs. A three-phase 59 Time setting of 0 to 30 seconds may be entered.

Single Phase – 59 Alarm Configuration. This setting selects how a line-to-line overvoltage condition is annunciated. An overvoltage condition can be configured to trigger a pre-alarm, alarm, or no annunciation.

81 Tab

The 81 tab contains the underfrequency and overfrequency settings shown in Figure 4-21 and described in the following paragraphs.

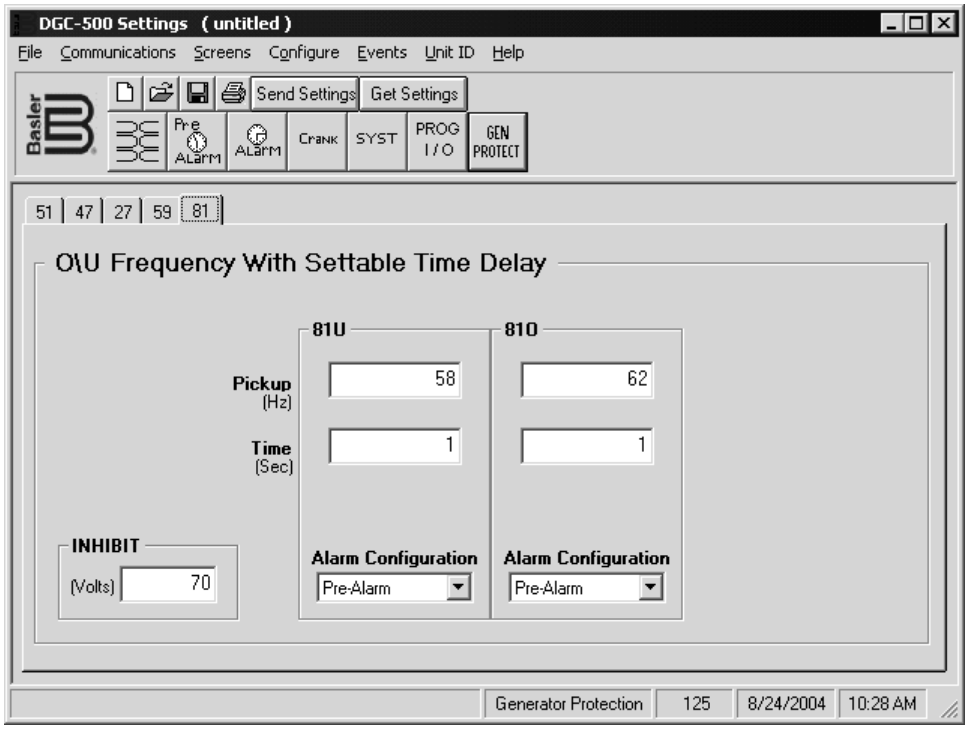

Figure 4-21. Generator Protection Screen, 81 Tab

81U – Pickup. This setting selects the level of frequency that will cause an underfrequency pickup. For 50/60 hertz generator frequency sensing, an 81U Pickup setting of 45 to 65 hertz may be entered. For 400 hertz generator frequency sensing, an 81U Pickup setting of 360 to 440 hertz may be entered.

81U – Time. This setting selects the length of time between when an underfrequency condition is detected and annunciated. An 81U Time setting of 0 to 30 seconds may be entered.

81U Alarm Configuration. This setting selects how an underfrequency condition is annunciated. An 81U condition can be configured to trigger a pre-alarm, alarm, or no annunciation.

Inhibit. This setting selects the undervoltage level that will prevent an underfrequency (81U) trip from occurring. An Inhibit setting of 70 to 576 Vac may be entered.

81O – Pickup. This setting selects the level of frequency that will cause an overfrequency pickup. For 50/60 hertz generator frequency sensing, an 81U Pickup setting of 45 to 65 hertz may be entered. For 400 hertz generator frequency sensing, an 81U Pickup setting of 360 to 440 hertz may be entered.

Katolight Service - Master Repair Manual - Page 1893

81O – Time. This setting selects the length of time between when an overfrequency condition is detected and an overfrequency annunciation (trip) occurs. An 81O Time setting of 0 to 30 seconds may be entered.

81O Alarm Configuration. This setting selects how an 81O condition is annunciated. An 81O condition can be configured to trigger a pre-alarm, alarm or no annunciation.

REAL-TIME CLOCK

The DGC-500 real-time clock settings can be adjusted and verified through the Set Real Time Clock dialog box (Figure 4-22). Click **Configure** on the menu bar and click **Real Time Clock**.

To set the DGC-500 real-time clock with the PC's time and date settings, perform the following steps.

1. Click the **Display PC Date and Time** button. The PC clock settings are displayed in the date and time fields. (The date and time fields of the Set Real Time Clock dialog box cannot be changed manually.)
2. Select the **Automatically adjust for Daylight Savings Time** check box if automatic compensation for daylight savings time is desired.
3. Click the **Send Settings to DGC** button to set the DGC-500 real-time clock with the PC's time and date.

The DGC-500 real-time clock settings can be viewed and verified by clicking the **Display DGC Settings** button.

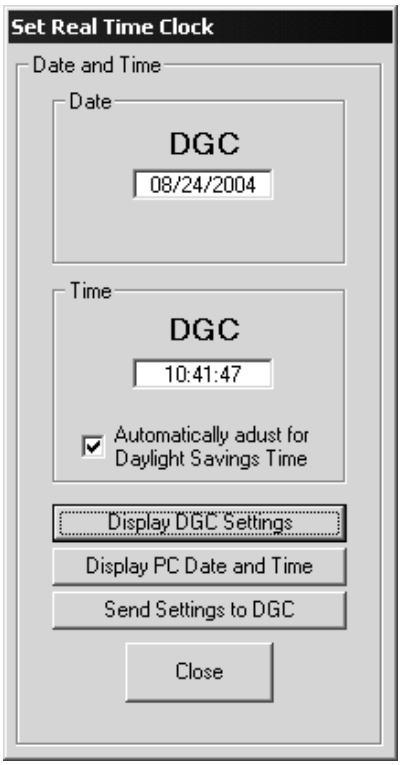

Figure 4-22. Set Real Time Clock Screen

PROGRAMMABLE SENDERS

Click **Configure** on the menu bar and click **Programmable Senders** to access the Programmable Senders screen.

The Programmable Senders screen has three tabs: Coolant Temperature, Oil Pressure, and Percent Fuel Level. Because the setting fields and buttons of each tab are so similar, only the Coolant Temperature tab settings are described here.

The Coolant Temperature tab settings of the Programmable Senders screen are shown in Figure 4-23. Each tab setting is described in the following paragraphs.

Get Cool. Data From DGC. If communication with a DGC-500 is enabled, clicking this button retrieves the sender data points from the DGC-500 and refreshes the graph.

Send Cool. Data to DGC. Clicking this button sends the displayed data points to the DGC-500.

Load Cool. Settings File. Clicking this button displays an Open dialog box where a sender file containing sender data points can be retrieved. Some standard data point files for the three senders are included with BESTCOMS. Coolant temperature sender files have a CS5 extension, oil pressure sender files have an OS5 extension, and fuel level sender files have an FS5 extension.

Create Cool. Settings File. Clicking this button displays a Save As dialog box where the transducer data points created in BESTCOMS can be saved in a sender file. While it is possible to create individual sender files for each transducer, it is not necessary. The data for all three senders is automatically saved with the DGC-500 configuration file. The *Settings Files* sub-section contains information about creating DGC-500 configuration files.

Resistance. The 11 resistance points in this column are not adjustable. The DGC-500 has been factory calibrated at these points to maximize accuracy.

Degrees F/Degrees C. Temperature values entered in this column must always maintain a descending order. If English units are used, adjacent coolant temperature points must be separated by at least 2 F. If metric units are used, adjacent oil pressure points must be separated by at least 7 kilopascals. The coolant temperature setting range is 32 to 400 F or 0 to 240 C. The oil pressure setting range is 0 to 250 psi or 0 to 1,725 kilopascals. The fuel level setting range is 0 to 100 percent.

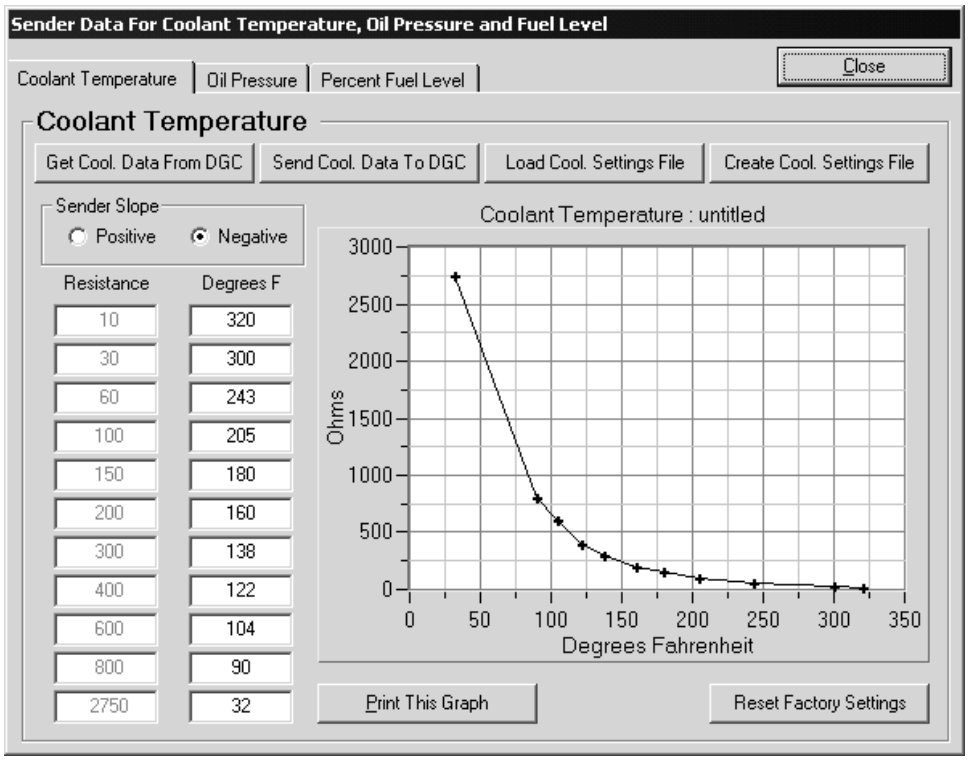

Figure 4-23. Programmable Senders Screen, Coolant Temperature Tab

Sender Slope. If a sender requires a positive slope, Positive can be selected to invert the values in the Resistance column.

Reset Factory Settings. Clicking this button restores the factory-default data points in the Degrees F/Degrees C column and graph. This does not update the data points in the DGC-500. The DGC-500 is updated by clicking the Send Cool. Data to DGC button.

NOTE

When metric values are used and changes are made to the oil pressure sender data points, undesirable internal rounding of some data points can occur. For example, select 700 kilopascals for one data point, create a sender file, and the value is rounded to 697. Rounding that occurs will never be greater than 4 kilopascals.

Fuel Level Type

This setting, located on the Percent Fuel Level tab, allows the selection of four fuel types: Percent, Natural Gas, Propane, and Disabled. Selecting a fuel type other than Percent will disable any fuel level indication, alarm, and pre-alarm and disable the percent fuel level values of the Percent Fuel Level tab.

RUN STATISTICS

The DGC-500 compiles statistics for both individual generator run sessions and the cumulative total of all generator run sessions. Generator run statistics are displayed on the Run Statistics screen (Figure 4-24), which is accessed through the menu bar by clicking **Events**, **Run Statistics**. Run Statistics screen indications and controls are described in the following paragraphs.

Start Date. When the DGC-500 and/or genset are commissioned, a date is selected from the pull-down calendar for the DGC-500 to use as a starting point for tracking generator run statistics. Clicking the **Update DGC Start Date** button sends the selected date to the DGC-500.

Session Run Statistics. This area of the Run Statistics screen displays the start date and total running time for the current run session. The total running hours are additionally split into unloaded running time and loaded running time.

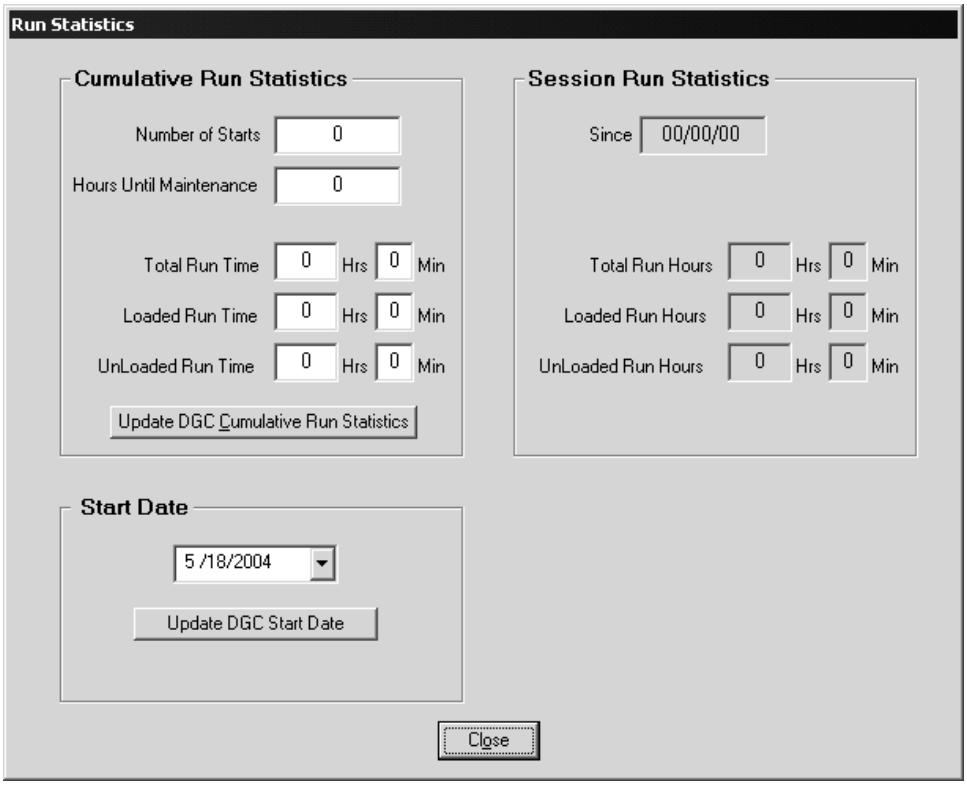

Figure 4-24. Run Statistics Screen

Cumulative Run Statistics. This area of the Run Statistics screen displays the total running time, unloaded running time, and loaded running time since the genset/DGC-500 was commissioned. The number of engine starts and time remaining until maintenance is also displayed. Each field in the Cumulative Run Statistics area can be adjusted by the user and sent to the DGC-500 by clicking the **Update DGC Cumulative Run Statistics** button.

EVENT LOG

The Event Log screen displays a record of system events that are stored in DGC-500 nonvolatile memory. System events are categorized by the event log into event types. The event log capacity is 30 event types.

Each event type in the log contains an event identifier label, the number of occurrences for the event, and the time stamp of the most recent event occurrence. The time stamp displayed is user-selectable and can be real-time clock data or the elapsed engine hours.

When an event type is logged, it occupies one entry (or row) in the low. If the same event type is logged again, it still only occupies one entry in the log. However, the log entry is updated with the number of occurrences and the Last Date/Time column is updated with the time stamp of the last occurrence.

If the event log contains the maximum of 30 event types and a new event type is logged, the oldest event type in the log is overwritten with the new event type.

For event types monitored by the event log, refer to Section 3, *Functional Description, Software Operation, Event Log*.

The Event Log screen is accessed by clicking **Events** on the menu bar and clicking **Event Log**. The Event Log screen is shown in Figure 4-25. Its controls and indicators are described in the following paragraphs.

Refresh Event Log. Clicking this button updates the Event Log screen with any newly acquired system events.

Clear Selected Event(s). clicking this button deletes all highlighted events in the record list.

Number of Events. This field displays the number of events held in the event log.

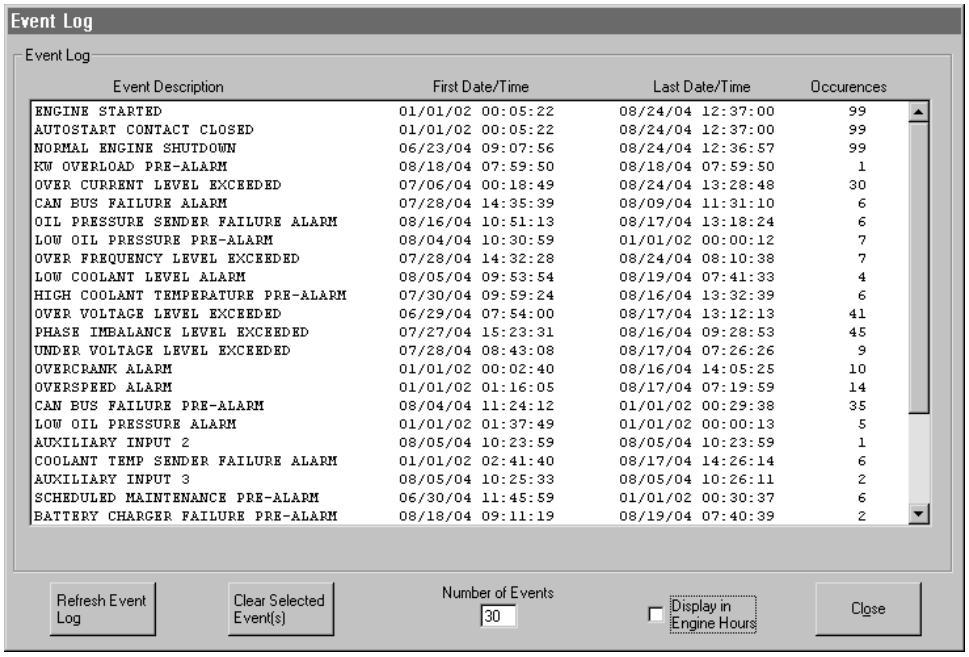

Figure 4-25. Event Log Screen

Display in Engine Hours. Placing a check in this checkbox causes the Event Log screen to display events time-stamped with elapsed engine hours. An empty checkbox causes the Event Log screen to display events time-stamped with real-time clock data.

SETTINGS FILES

BESTCOMS software enables you to print a list of DGC-500 settings, save DGC-500 settings to a file, and open a settings file and upload those settings to a DGC-500.

Printing Settings Files

A printout of DGC-500 settings can be useful for record keeping or comparison purposes. Click the **Print Settings File** button or click **File** on the menu bar and click **Print** to access the Print DGC-500 Settings screen. This print screen contains a print-preview pane and settings for selecting the printer, content of the printout, and printout orientation. DGC-500 settings are divided into three print sections: General Settings, Programmable I/O Settings, and Input Sender Settings. Any combination of sections can be selected for printing.

New Settings File

Clicking this button resets the settings displayed in BESTCOMS to the factory-default values. If changes to settings have not been saved, you will be given the opportunity to save the changes in a DGC-500 settings file.

Saving Settings Files

Saving DGC-500 settings to a file for uploading to other DGC-500 units saves setup time when configuring multiple units to the same configuration. A settings file can also be created in BESTCOMS without being connected to a DGC-500. The settings of the desired screens can be changed and these settings can then be saved to a file.

A settings file is created by clicking the **Save Settings File** button or clicking **File** on the menu bar and clicking **Save**. A file properties box appears and allows you to enter generator information and other pertinent notes about the settings. Next, a Save As dialog box prompts you to select the name and location of the settings file. All DGC-500 settings files are automatically given a DG5 file extension by BESTCOMS.

Opening Settings Files

To open a DGC-500 settings file, click the **Open Settings File** button or click **File** on the menu bar and click **Open**. An Open dialog box will appear and enable you to select a DGC-500 settings file (DG5 extension) for retrieval into BESTCOMS.

RS-232 CONFIGURATION

When communication is established between a PC and DGC-500, changes in BESTCOMS to the communication configuration settings affect both the PC and DGC-500. When communication between a PC and DGC-500 is closed, changes in BESTCOMS to the communication configuration settings affect only the PC.

The communication configuration settings are viewed and adjusted through the Communications Configure dialog box. This dialog box is accessed by clicking **Configure** on the menu bar and clicking **RS232**. The Communications Configure dialog box settings are illustrated in Figure 4-26 and described in the following paragraphs.

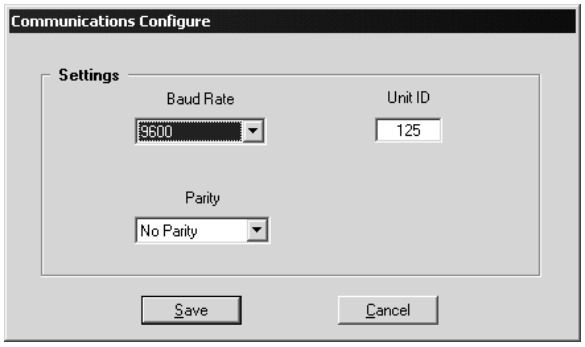

Figure 4-26. Communications Configure Dialog Box

Baud Rate. This setting selects the communication rate. A baud rate of 1200, 2400, or 9600 can be selected.

Parity. This setting enables and disables summation checking of data transmitted between the PC and DGC-500. A setting of No Parity, Odd Parity, or Even Parity can be selected.

Unit ID. This setting allows an identification number to be assigned to a DGC-500 for polled communication. A number between 1 and 247 may be used.

ENGINE CONTROL UNIT (ECU) INTERFACE

For J1939 applications, the interface between the DGC-500 and ECU is configurable. First, the output contact used to power up the ECU (for non-continuously powered ECU applications) is selectable. Second, periodic communication with the ECU (also referred to as pulsing the ECU) may be disabled if the application requires it. Third, the timers associated with pulsing the ECU are programmable. The settings used to configure the ECU interface are adjusted through the ECU Control dialog box. This dialog box is accessed by clicking **Configure** on the menu bar and clicking **ECU Control**. The ECU interface settings of the ECU Control dialog box are shown in Figure 4-27 and described below.

ECU Contact Control – Output Select. This setting selects the DGC-500 output that is used to power up the ECU in J1939 applications where the ECU is not continuously powered. If the pre-start contact is selected, the fuel contact will still close during cranking and running of the genset to provide a separate indication that the genset is running.

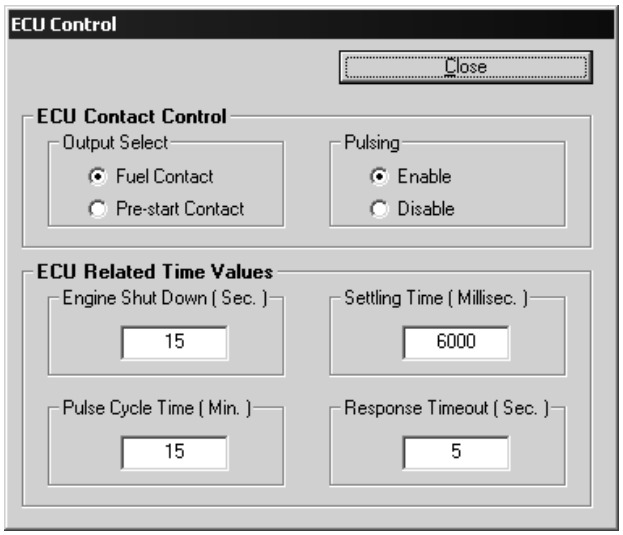

Figure 4-27. ECU Control Dialog Box

ECU Contact Control – Pulsing. In J1939 applications where the ECU is not continuously powered, the DGC-500 will normally pulse the ECU periodically to update its engine monitoring data. For applications where this periodic pulsing is not desired, this setting allows the pulsing feature to be disabled.

ECU Related Time Values – Engine Shut Down (Sec.). When going from Running to Shut Down, this setting adjusts the length of time that the DGC-500 stays disconnected from the ECU before starting the first pulse. The Engine Shut Down setting range is 1 to 60 seconds.

ECU Related Time Values – Setting Time (Millisec.). This setting adjusts the time to gather data after connecting to the ECU during the Pulsing state. This allows all metered values to be sent and ramp up. Metered values are sent by the ECU at different rates as designated by the J1939 protocol. Values sent by the ECU may be low initially; the ECU takes time to average its own data. The Setting Time setting range is 5,500 to 30,000 milliseconds.

ECU Related Time Values – Pulse Cycle Time (Min.). This setting adjusts the time that the DGC-500 waits to pulse the ECU again. The Pulse Cycle Time setting range is 1 to 60 minutes.

ECU Related Time Values – Response Timeout (Sec.). This setting controls the time that communication is attempted with the ECU while the DGC-500 is in the Pulsing or Connecting state. The Response Timeout setting range is 1 to 60 seconds.

PASSWORD PROTECTION

Password protection guards against unauthorized changing of DGC-500 settings. DGC-500 passwords are case-sensitive. Three levels of password protection are available. Each level is described in the following paragraphs.

- Limited Access. This password level allows all DGC-500 settings to be read, but prevents any changes to settings. The default, limited-access password is DGC.
- Full Access. This password level allows all DGC-500 settings to be read and allows all settings except Engine Runtime to be changed. The default, full-access password is DGC500.
- OEM Access. This password allows all DGC-500 settings to be read and allows all settings to be changed. It also allows the DGC-500 embedded firmware to be upgraded. The default, OEM-access password is OEMLVL.

Changing Passwords

Passwords can be changed only after communication between the PC and DGC-500 is established. Changes to passwords are made through the Change Password dialog box. To access the Change Password dialog box, click **Communications** on the menu bar and click **Change Password**.

The content of the Change Password dialog box depends on the password level used when accessing the dialog box. For example, someone logged-in with a full-access password will be able to change only the limited-access and full-access passwords—not the OEM-access password. Figure 4-28 shows the Change Password dialog box with all three access levels shown.

A password is changed by selecting the access level, entering the new password, and then re-entering the new password to confirm the entry.

Once a password is changed, it should be stored in a secure location. If a user-defined password is lost or forgotten, contact Basler Electric for instructions on regaining password access.

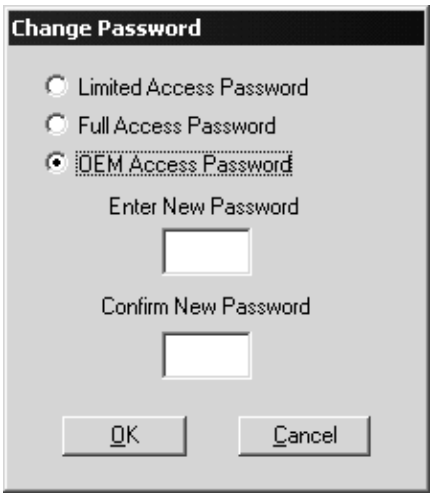

Figure 4-28. Change Password Dialog Box

TERMINATING COMMUNICATION

DGC-500 communication is terminated by clicking **Communications** on the menu bar and clicking **Close**. If unsaved settings changes were made, you are prompted to save the changes in a new or existing settings file. When you execute the close communication command (with or without saving settings), communication with the DGC-500 is terminated. If you choose to exit BESTCOMS (by clicking **File** on the menu bar and then **Exit**) without first closing communication, you are still given the opportunity to save any settings changes.

Katolight Service - Master Repair Manual - Page 1899

EMBEDDED FIRMWARE

Embedded firmware is the operating program that controls the actions of the DGC-500. The DGC-500 stores firmware in nonvolatile flash memory that can be reprogrammed through the RS-232 communication port. It is not necessary to replace EPROM chips when updating the firmware with a newer version.

Updating the Firmware

Future enhancements to DGC-500 functionality may make a firmware update desirable. Because default settings are loaded when DGC-500 firmware is updated, your settings should be saved in a file prior to upgrading firmware. DGC-500 embedded firmware can be updated by performing the following steps.

CAUTION

If power is lost or communication is interrupted during file transfer, the DGC-500 will not recover and will cease operating.

1. Connect a communication cable between the rear RS-232 connector of the DGC-500 and the appropriate communication port of your PC. Start BESTCOMS-DGC500-32, open communication, and gain password access with the OEM-access password.
2. Click Configure on the menu bar and click Upgrade Embedded Firmware. When Upgrade Embedded Firmware is clicked, the Embedded Firmware Upgrade dialog box (Figure 4-29) appears.

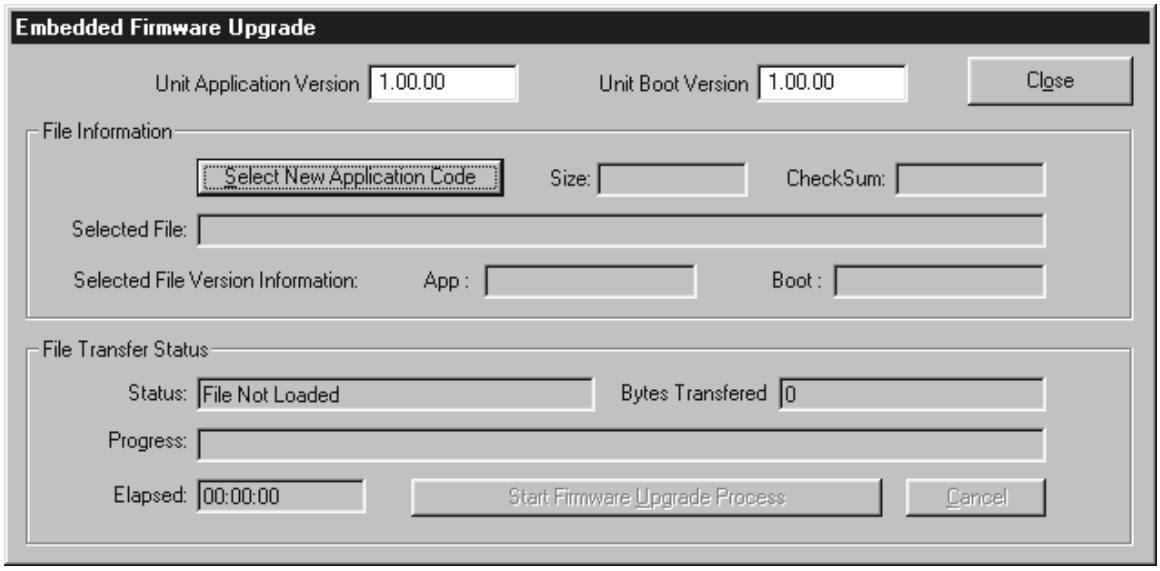

Figure 4-29. Embedded Firmware Upgrade Dialog Box

3. Click the Select New Application Code button and then navigate to and select the file (S19 file extension) to be used for updating the DGC-500 firmware. The file details are displayed in the File Information section of the Embedded Firmware Upgrade dialog box (Figure 4-30).

Katolight Service - Master Repair Manual - Page 1900

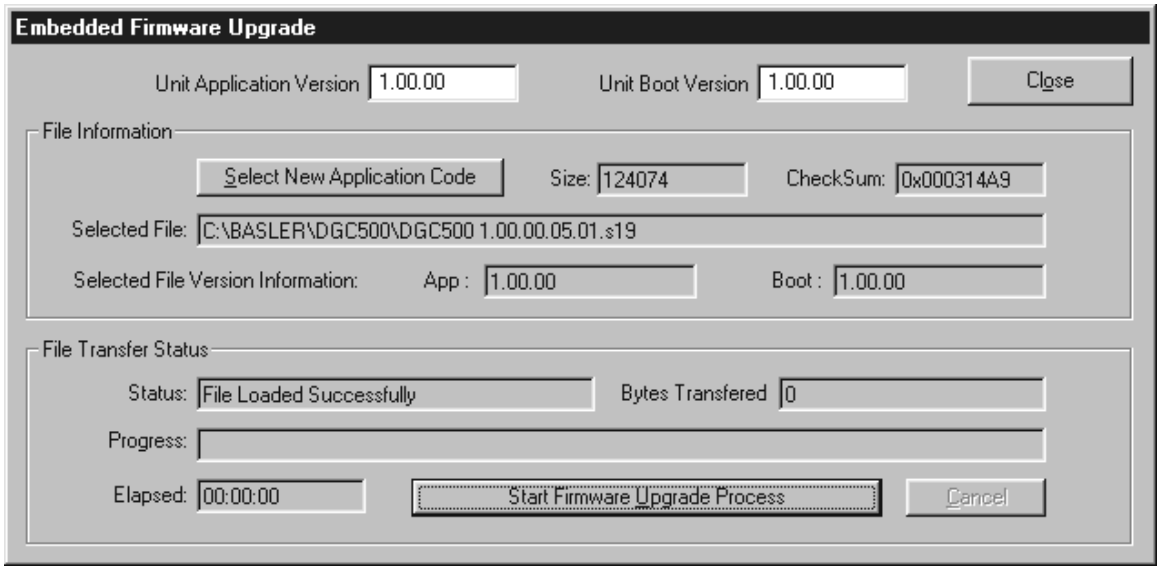

Figure 4-30. Firmware File Information

4. Click the Start Firmware Upgrade Process button. The Erase Application Code!!!! and Save Settings Before You Continue!!!! dialog boxes appear and confirm that you want to continue. Click Yes in both dialog boxes to begin transferring the firmware file to the DGC-500. The file transfer status is displayed in the Embedded Firmware Upgrade dialog box (Figure 4-31).

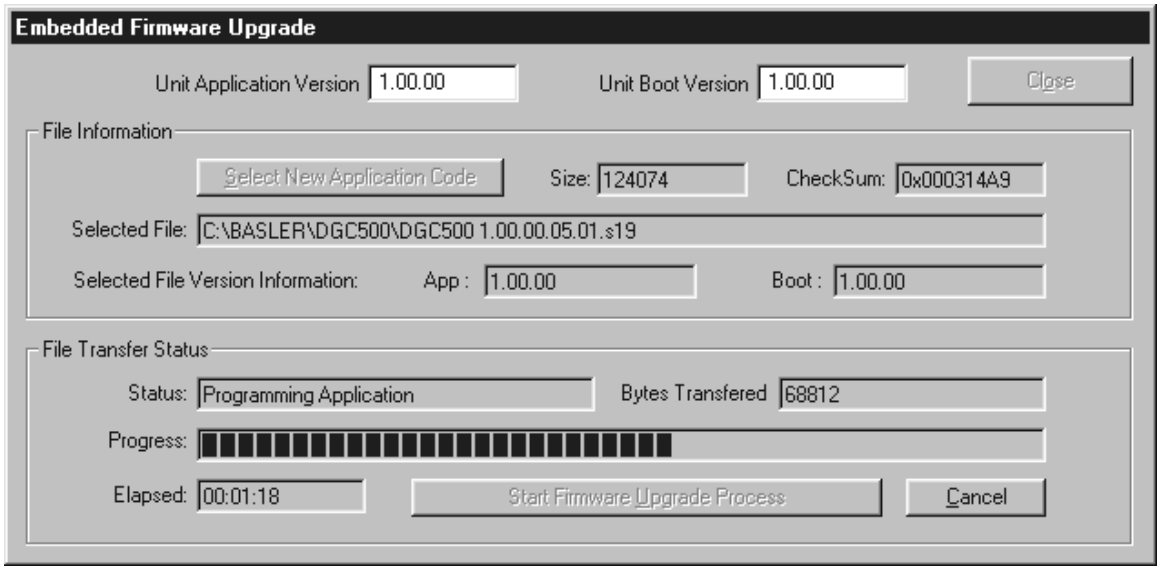

Figure 4-31. File Transfer Status

5. Once the file transfer is complete, close the Embedded Firmware Upgrade dialog box, open communication between the PC and DGC-500, and gain password access to the DGC-500 with the appropriate password.

SECTION 5 • INSTALLATION

TABLE OF CONTENTS

SECTION 5 • INSTALLATION 5-1
- GENERAL 5-1
- PRODUCT REGISTRATION 5-1
- HARDWARE 5-1
- MOUNTING 5-1
  - DGC-500 Isolator Kit 5-2
- CONNECTIONS 5-3
  - DGC-500 Terminations 5-3
  - Serial Communication Port 5-3
  - CAN Connections 5-4
  - DGC-500 Connections for Typical Applications 5-5
  - Volvo Penta EDC III Applications 5-10
  - Special Contact Sensing Input Considerations 5-15
- CALIBRATION 5-15
  - Equipment Required 5-15
  - Entering Calibration Mode 5-16
  - Calibration Procedure 5-16

Figures

Figure 5-1. DGC-500 Cutout Dimensions 5-1
Figure 5-2. DGC-500 Overall Dimensions 5-2
Figure 5-3. Communication Port Pin Assignments 5-3
Figure 5-4. Personal Computer to DGC-500 Connections 5-4
Figure 5-5. CAN Cable Assembly 5-4
Figure 5-6. Typical DGC-500 CAN Interface Connections 5-5
Figure 5-7. DGC-500 Connections, Single-Phase, A-B 5-6
Figure 5-8. DGC-500 Connections, Single-Phase A-C 5-7
Figure 5-9. DGC-500 Connections, Three-Phase Delta 5-8
Figure 5-10. DGC-500 Connections, Three-Phase Wye 5-9
Figure 5-11. Volvo Penta EDC III Application, Single-Phase, A-B Connections 5-11
Figure 5-12. Volvo Penta EDC III Application, Single-Phase, A-C Connections 5-12
Figure 5-13. Volvo Penta EDC III Application, Three-Phase, Delta Connections 5-13
Figure 5-14. Volvo Penta EDC III Application, Three-Phase, Wye Connections 5-14
Figure 5-15. Contact Sensing Input Connections with Noise Suppression Diodes 5-15
Figure 5-16. Calibration Mode Navigation 5-16
Figure 5-17. Successful and Unsuccessful Calibration Screens 5-16

Tables

Table 5-1. Communication Port Pin Functions 5-3
Table 5-2. CAN Cable Assembly Termination Assignments 5-4

This page intentionally left blank.

SECTION 5 • INSTALLATION

GENERAL

DGC-500 Digital Genset Controllers are delivered in sturdy cartons to prevent shipping damage. Upon receipt of a system, check the part number against the requisition and packing list for agreement. Inspect for damage, and if there is evidence of such, immediately file a claim with the carrier and notify the Basler Electric Regional Sales Office, your Sales Representative, or a Sales Representative at Basler Electric, Highland, Illinois.

If the device is not installed immediately, store it in the original shipping package in a moisture and dust-free environment.

PRODUCT REGISTRATION

Registering with Basler Electric enables you to receive important information updates on your product plus new product announcements. Register your product by directing your web browser to http://www.basler.com/Register.

HARDWARE

DGC-500 controllers are packaged for mounting in any top-mount enclosure. The front panel is resistant to moisture, salt fog, humidity, dust, dirt, and chemical contaminants. It also inhibits insect and rodent entrance. DGC-500 controllers are mounted using the four permanently attached 10-32 studs. The torque applied to the mounting hardware should not exceed 30 inch-pounds (3.4 newton meters).

MOUNTING

Case cutout dimensions are shown in Figure 5-1. Overall dimensions are shown in Figures 5-2. All dimensions are shown in inches and millimeters (in parenthesis).

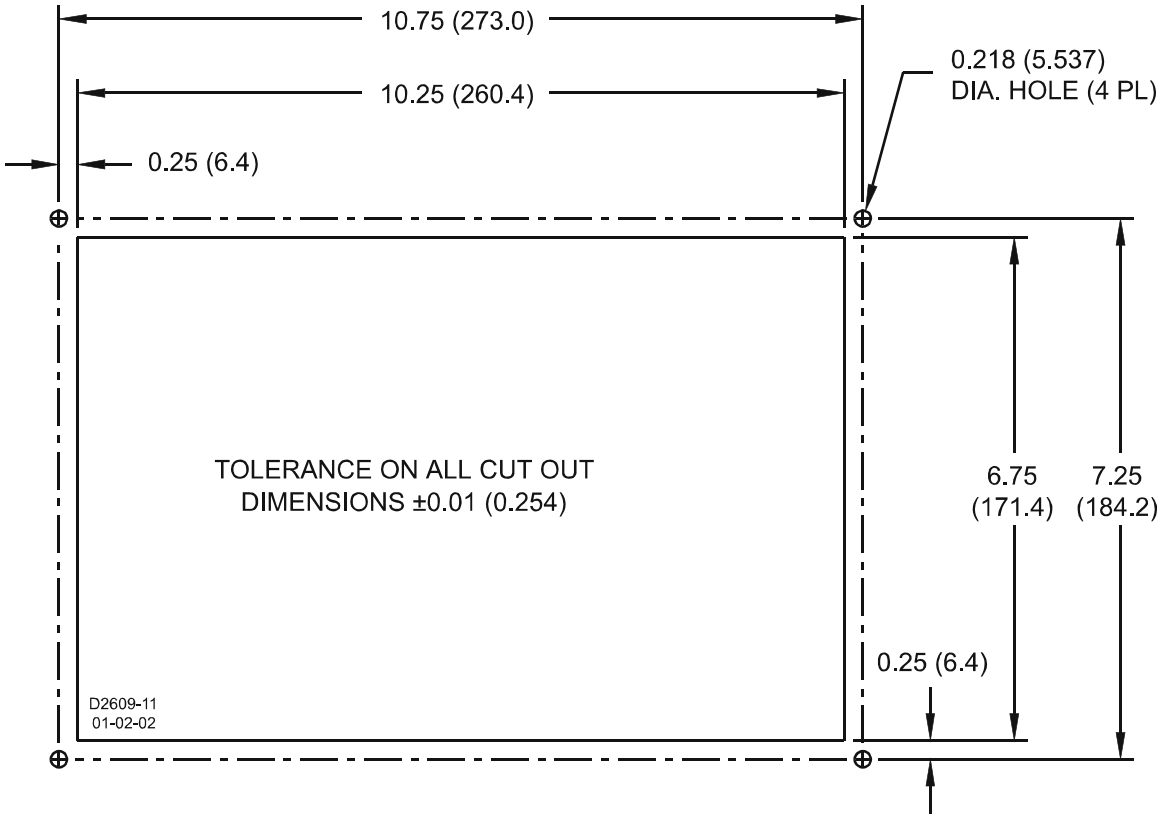

Figure 5-1. DGC-500 Cutout Dimensions

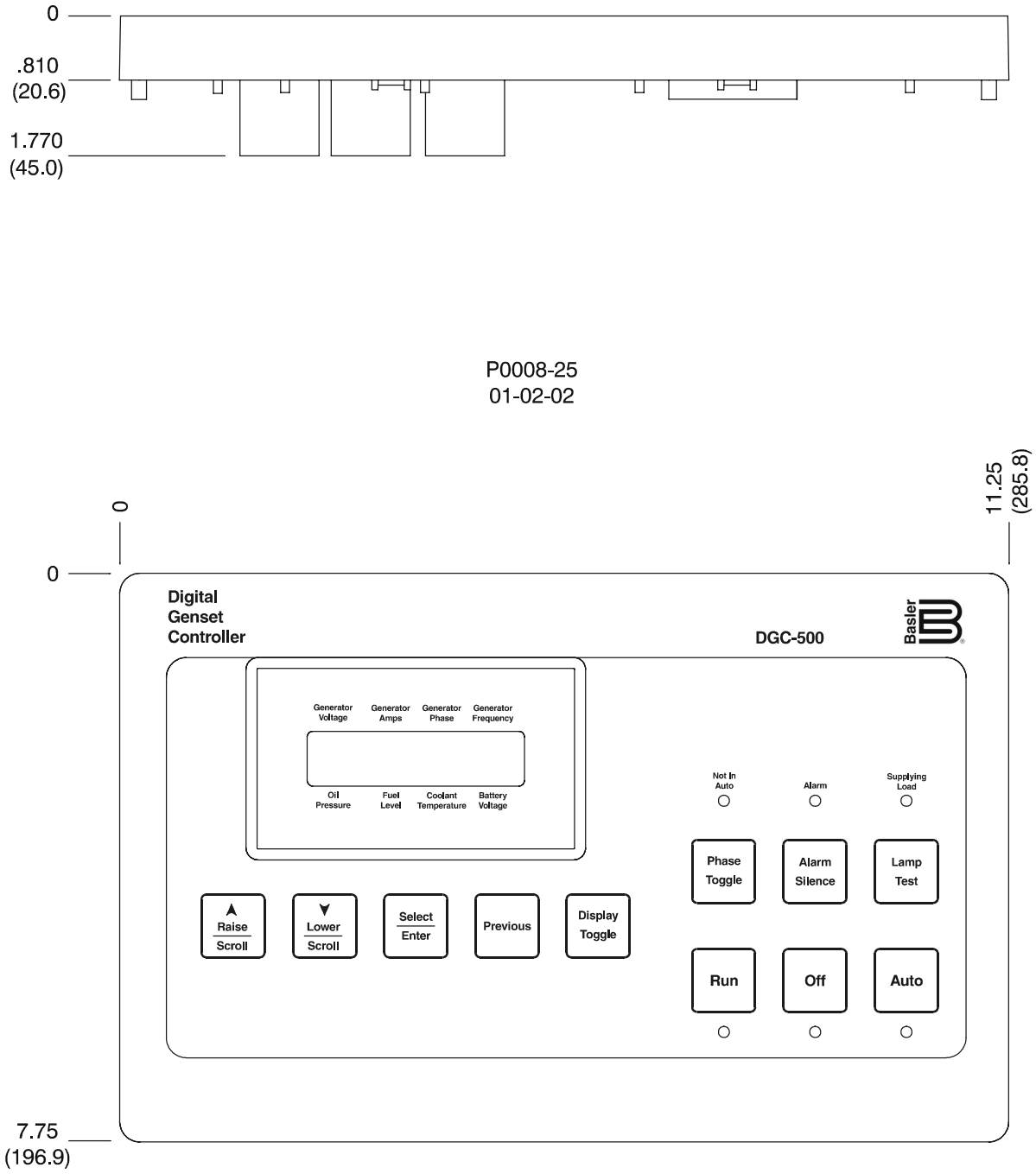

Figure 5-2. DGC-500 Overall Dimensions

DGC-500 Isolator Kit

The optional DGC Isolator Kit provides an economical way to reduce the level of shock and vibration transmitted from a generator to the DGC-500. The DGC Isolator Kit eliminates the need to mount an isolator box on top of the generator conduit box and simplifies wiring considerations. Isolator kits are available with either black- or gray-colored gaskets. Kit part number 9 3554 06 100 is supplied with a black gasket and kit part number 9 3554 06 101 is supplied with a gray gasket.

The DGC Isolator Kit provides vibration dampening at frequencies greater than 48 hertz. Above 90 hertz, vibration transmissibility is less than 10 percent of the input magnitude.

CONNECTIONS

DGC-500 connections are dependent on the application. Incorrect wiring may result in damage to the controller.

> **NOTE**
>
> Be sure that the DGC-500 is hard-wired to earth ground with no smaller than 12 AWG copper wire attached to the chassis ground terminal (P22) on the rear of the controller.
>
> Operating power from the battery must be of the correct polarity. Although reverse polarity will not cause damage, the DGC-500 will not operate.

DGC-500 Terminations

All DGC-500 terminals are located on the rear panel of the controller. There are three types of interface terminals.

J1, a DB9 connector, is used as a temporary communication interface with IBM compatible PCs.

J2, a five-terminal header, is an SAE J1939 interface used for high-speed communication with a CAN-enabled engine control unit (ECU). J2 is enabled only on DGC-500 controllers with style numbers of F1J or F5J.

All other connections consist of quarter-inch, quick-connect terminals. Amp part numbers 154718-3 (positive-lock receptacle) and 154719-1 (nylon housing) are the recommended components for making connections at the quick-connect terminals. Wires performing common functions, such as voltage sensing leads, should be grouped together.

All connections (except chassis ground and communication) should be made with wire no smaller than 14 AWG.

Serial Communication Port

The RS-232 port on the rear panel uses a DB9 female connector. Figure 5-3 illustrates the pin assignments of the communication port and Table 5-1 identifies the RS-232 connector pin functions. A standard communication cable terminated with a DB9 male connector is used for PC interface with the DGC-500 as shown in Figure 5-4.

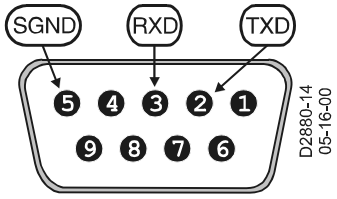

Figure 5-3. DGC-500 Communication Port Pin Assignments

Table 5-1. DGC-500 Communication Port Pin Functions

Pin	Function	Name	Direction
1	N/C	—	N/A
2	Transmit Data	TXD	From DGC-500
3	Receive Data	RXD	To DGC-500
4	N/C	—	N/A
5	Signal Ground	GND	N/A
6, 7, 8, 9	N/C	—	N/A

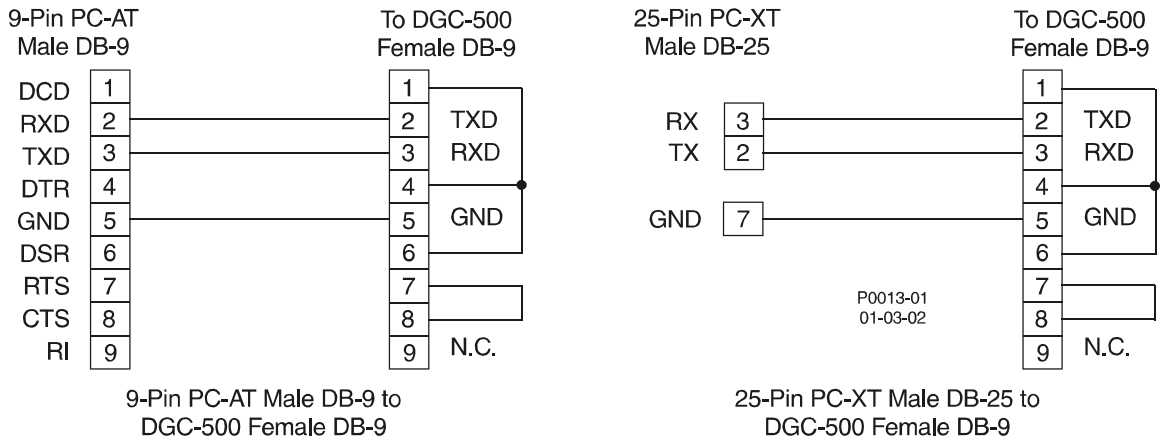

Figure 5-4. Personal Computer to DGC-500 Connections

CAN Connections

The CAN connector (J2) on the rear panel mates with the cable assembly (Basler P/N 9 3589 00 002) provided with the DGC-500. Only units with style numbers F1J AND F5J are supplied with the cable assembly and have connector J2 enabled. The cable assembly is shown in Figure 5-5 and the termination assignments are listed in Table 5-2. Figure 5-6 illustrates typical DGC-500 CAN interface connections.

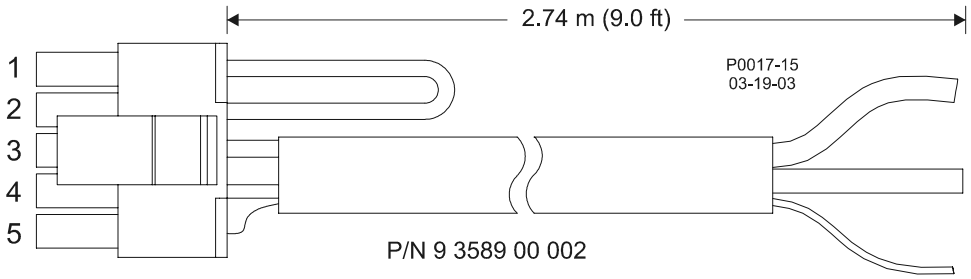

Figure 5-5. CAN Cable Assembly

Table 5-2. CAN Cable Assembly Termination Assignments

J2 Terminations	Function	User Terminations
Pin 1	Termination Resistor	✳
Pin 2		
Pin 3	CAN High	Red Wire
Pin 4	CAN Low	Black Wire
Pin 5	Drain	Uninsulated Wire †

✳ If the DGC-500 is not providing one end of the J1939 backbone, cut the jumper connected across pins 1 and 2 to disconnect the internal terminating resistor.

† The J1939 drain (shield) should be grounded at one point only. If grounded elsewhere, cut the drain connection to the DGC-500.

Note: If the DGC-500 is not part of the J1939 backbone, the stub connecting the DGC-500 to the backbone should not exceed 914 mm (3 ft) in length.

Katolight Service - Master Repair Manual - Page 1907

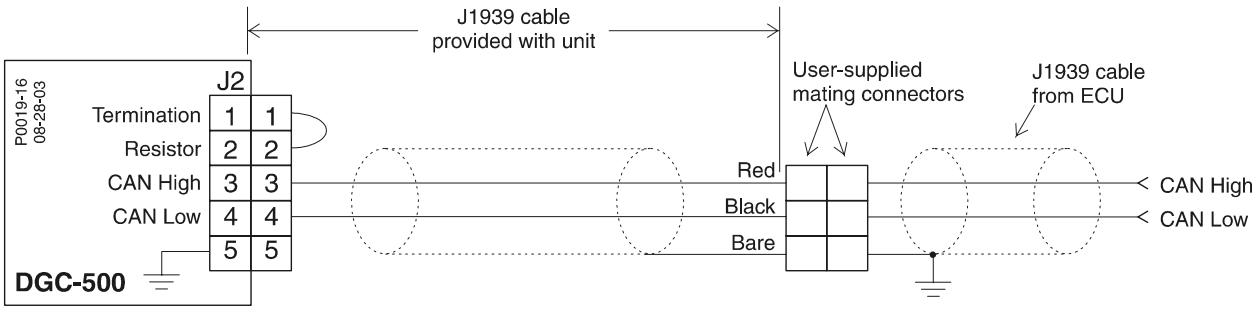

Figure 5-6. Typical DGC-500 CAN Interface Connections

DGC-500 Connections for Typical Applications

Figures 5-7 through 5-9 illustrate typical applications using the DGC-500. Figure 5-7 shows a DGC-500 application using single-phase sensing. Figure 5-8 shows a DGC-500 application using three-phase, delta sensing. Figure 5-9 shows a DGC-500 application using three-phase, wye sensing.

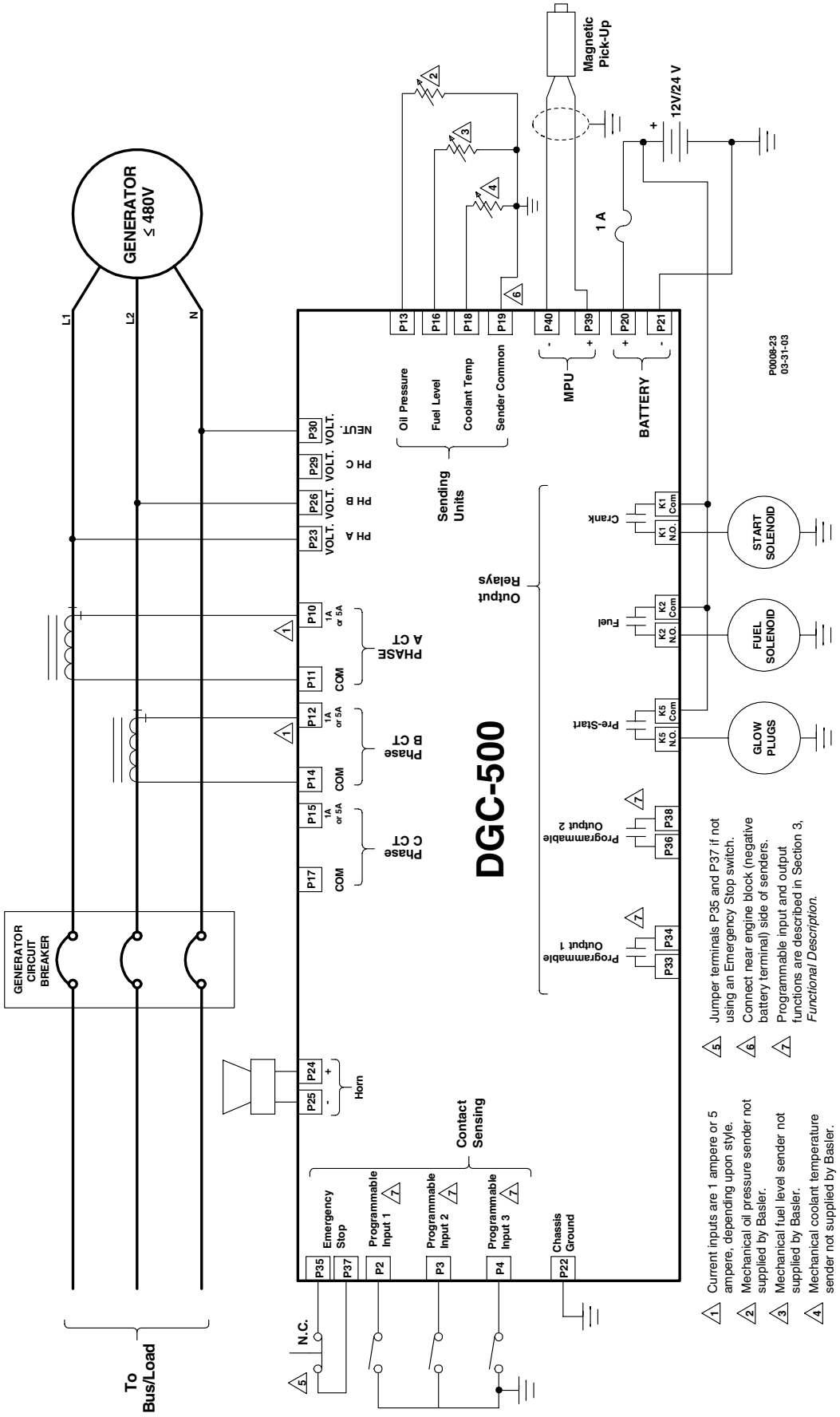

Figure 5-7. DGC-500 Connections, Single-Phase, A-B

Katolight Service - Master Repair Manual - Page 1909

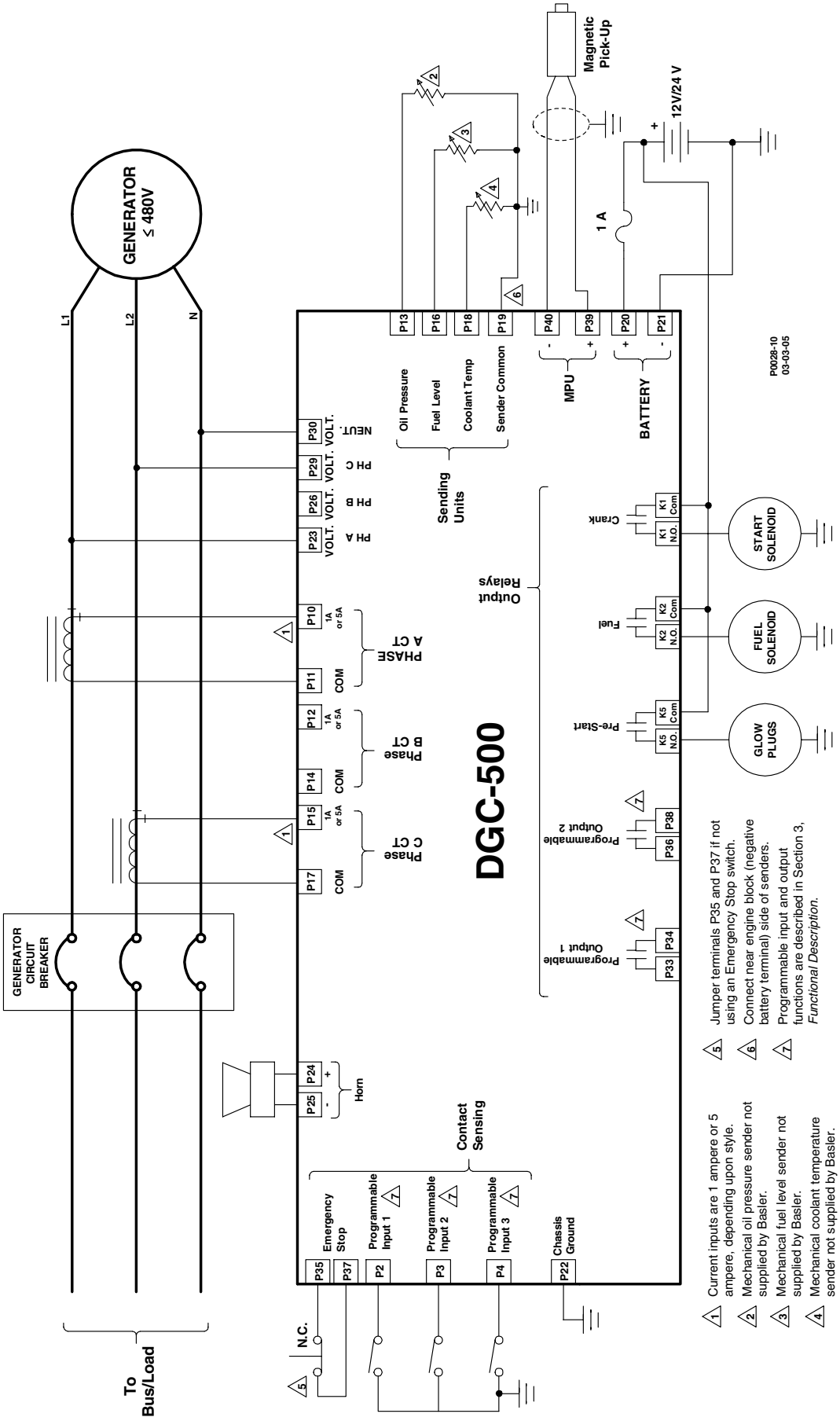

Figure 5-8. DGC-500 Connections, Single-Phase, A-C

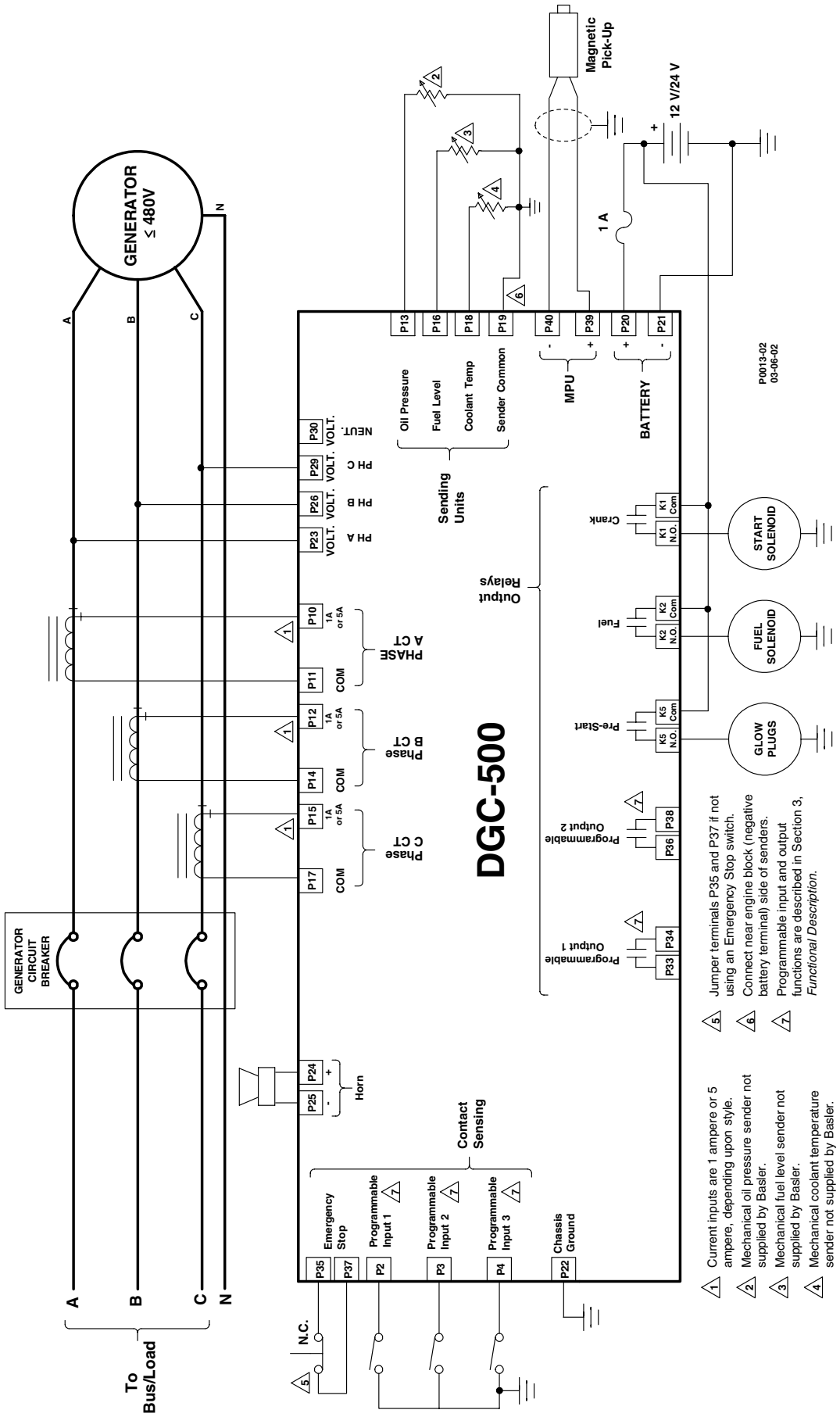

Figure 5-9. DGC-500 Connections, Three-Phase Delta

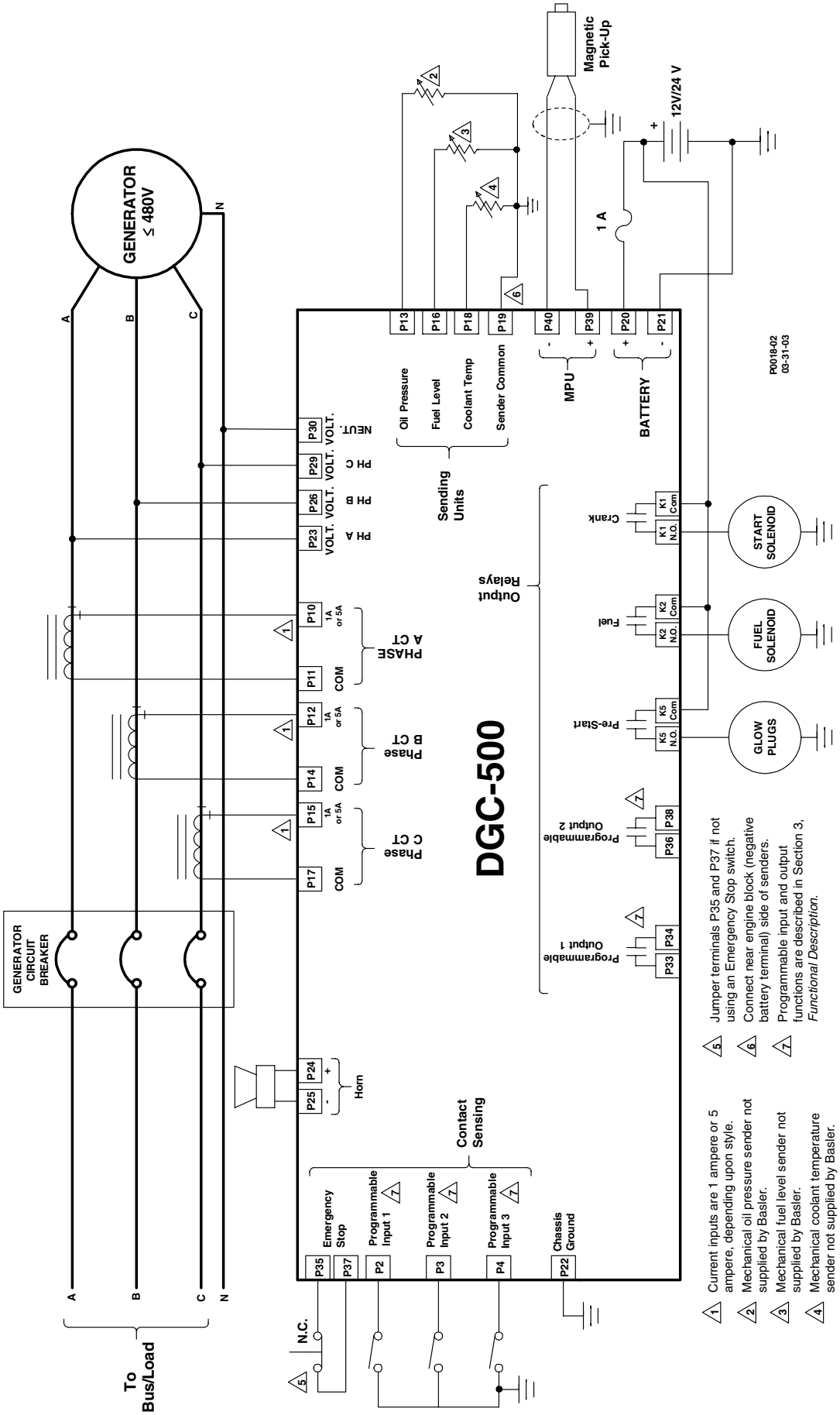

Figure 5-10. DGC-500 Connections, Three-Phase Wye

Volvo Penta EDC III Applications

Engines equipped with Volvo Penta EDC III controllers can receive engine control commands (such as start and stop) from the DGC-500 through the SAE J1939 communication interface. To invoke this feature, the EDC III must receive a J1939 message containing engine control information within one second of waking (exiting sleep mode). If the EDC III does not receive an engine control message within the prescribed time, it will enter the stand-alone mode and ignore any J1939 control messages. If this occurs, the EDC IIImust be forced back into sleep mode by pressing the auxiliary stop pushbutton on the engine or by momentarily disconnecting EDC power.

The interconnection diagrams of Figures 5-11 through 5-14 illustrate the DGC-500 and EDC III connections that allow the DGC-500 to awaken the EDC III and start the engine, or simply acquire engine status information. Wake-up of the EDC III is initiated by using the DGC-500 Fuel output contacts to apply battery power to the EDC. To stop the engine, the DGC-500 issues a sleep command through the J1939 interface to the EDC III and opens the Fuel output contacts. This causes the EDC to stop the engine and enter the sleep mode.

In order for the DGC-500 to communicate with the EDC III, two DGC-500 settings must be changed from their default values.

- The J1939 address of the DGC-500 must be set at 17
- The engine start/stop configuration setting must be set for Volvo Penta

Both settings are configured on the System Settings screen of BESTCOMS. Section 4, *BESTCOMS Software* has information about adjusting DGC-500 settings through BESTCOMS.

Katolight Service - Master Repair Manual - Page 1913

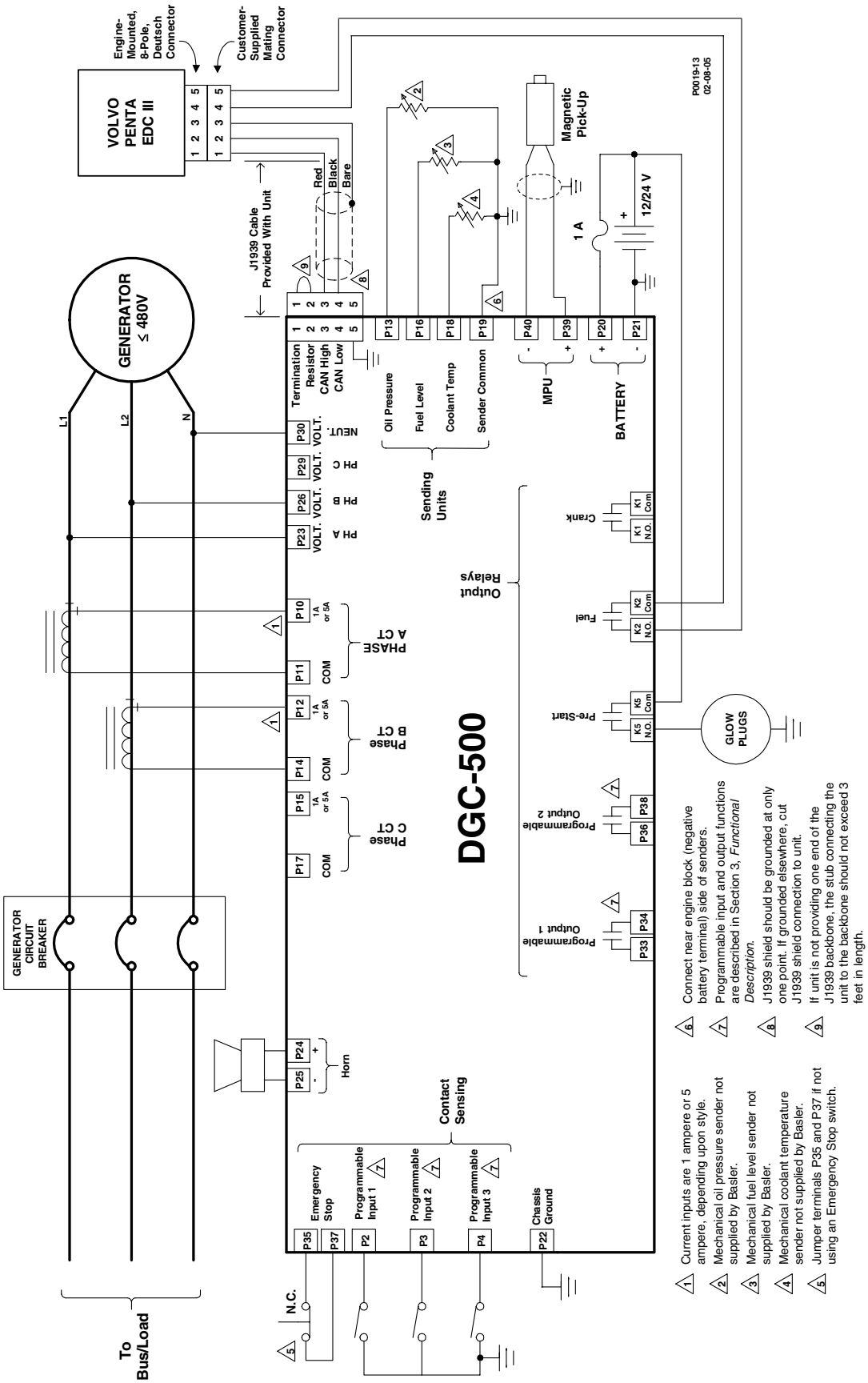

Figure 5-11. Volvo Penta EDC III Application, Single-Phase, A-B Connections,

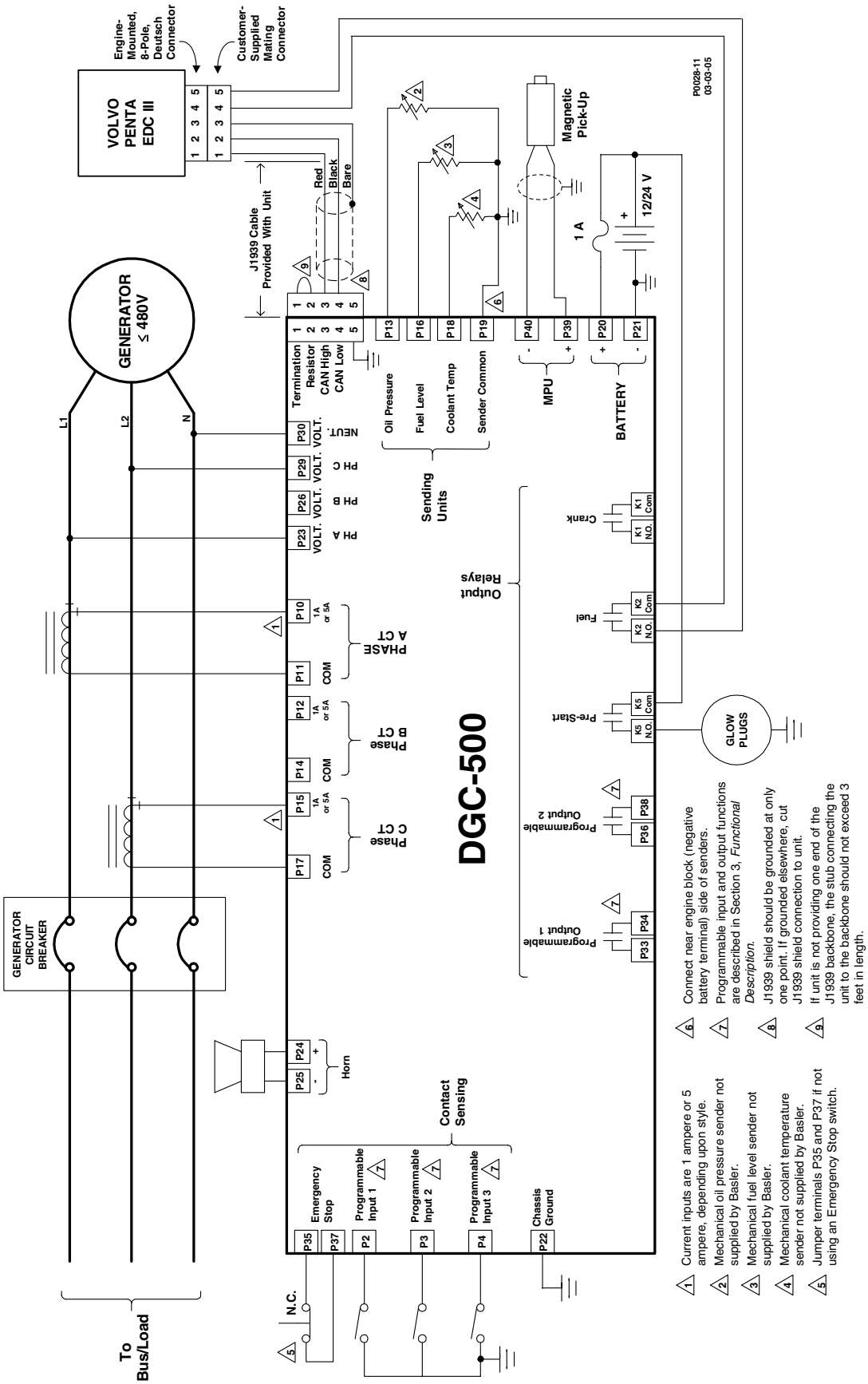

Figure 5-12. Volvo Penta EDC III Application, Single-Phase, A-C Connections

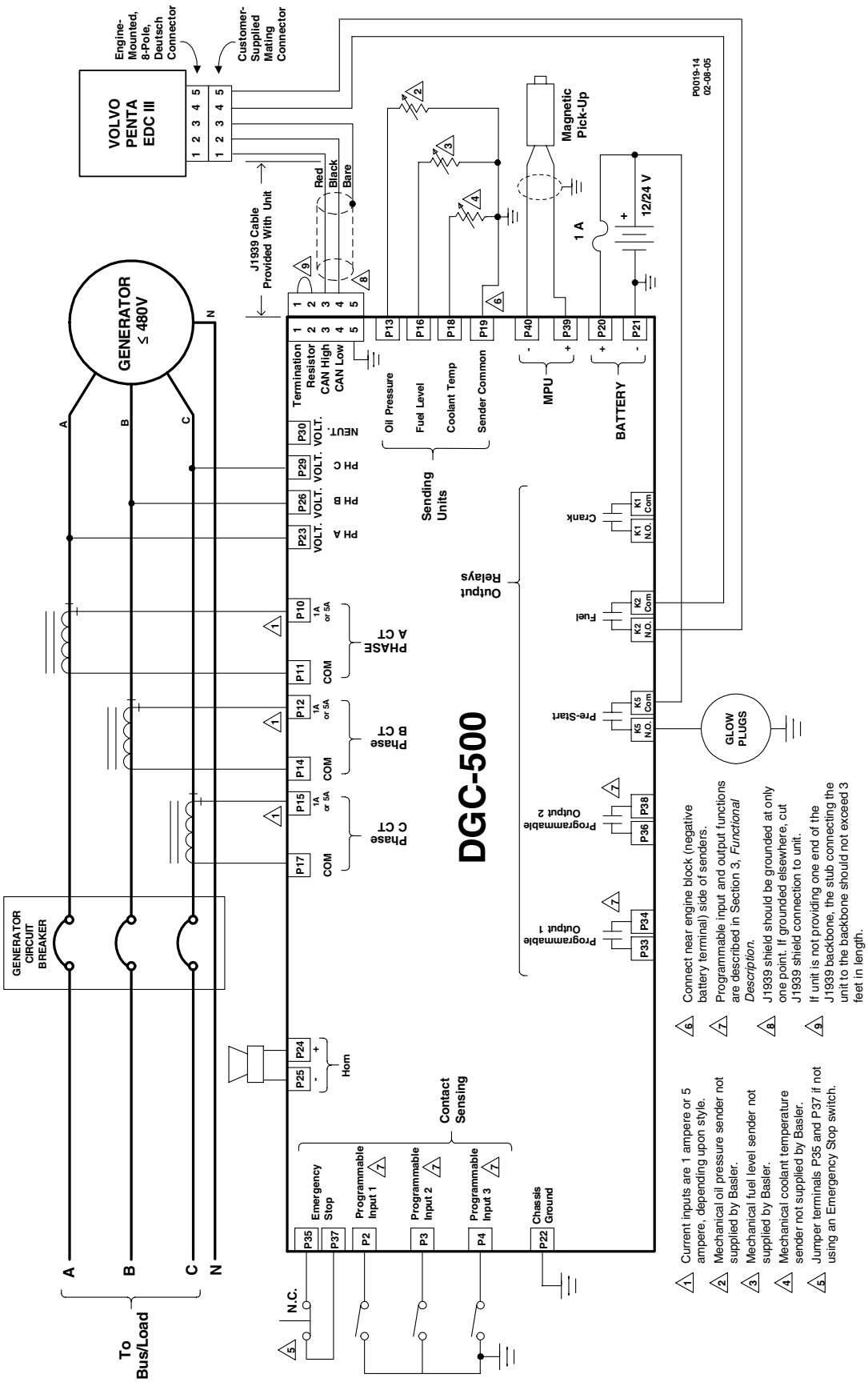

Figure 5-13. Volvo Penta EDC III Application, Three-Phase, Delta Connections

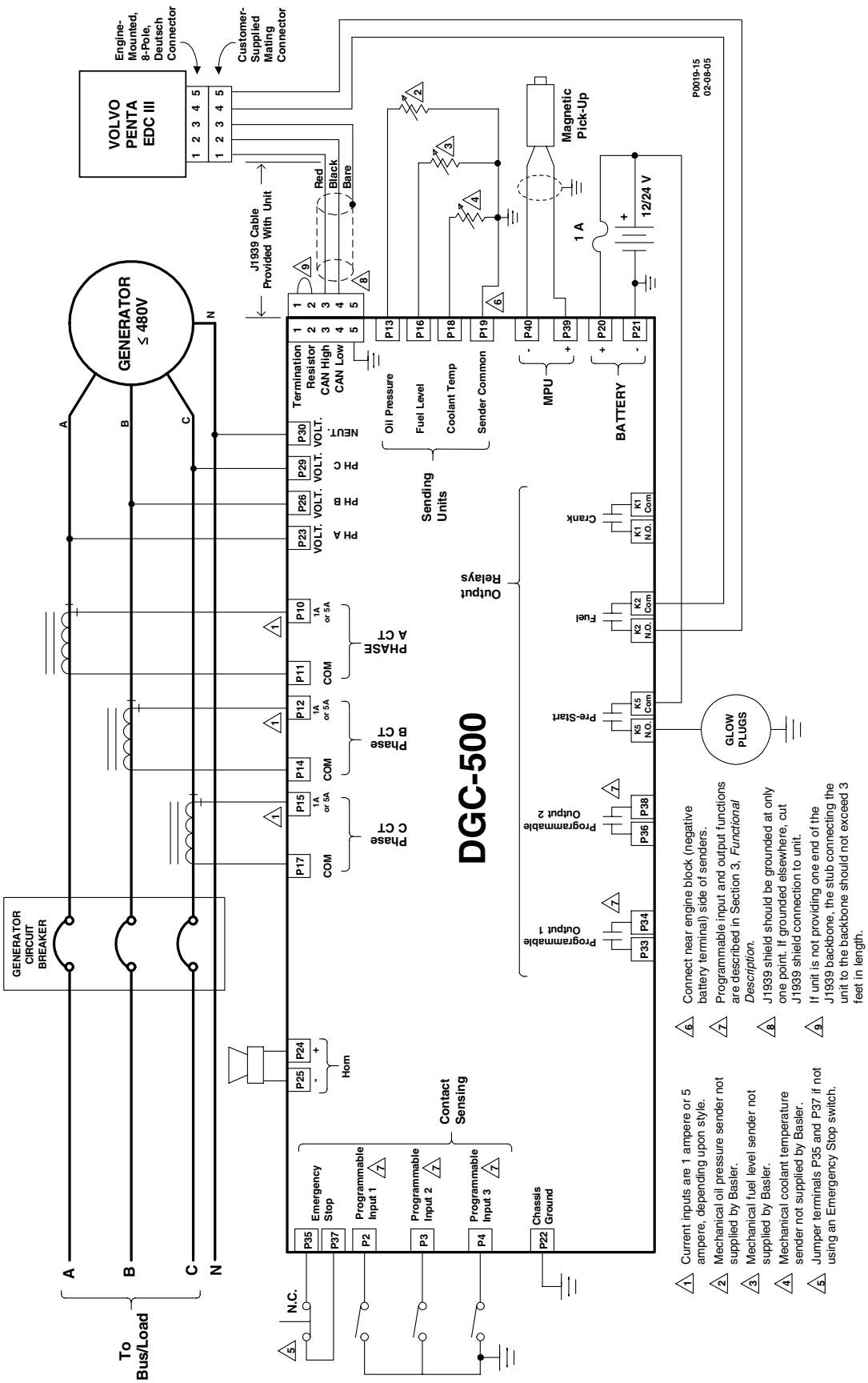

Figure 5-14. Volvo Penta EDC III Application, Three-Phase, Wye Connections

Special Contact Sensing Input Considerations

DGC-500 controllers, with version M or earlier hardware, may require additional protection for the contact sensing inputs when used in environments with high levels of electrical noise. Additional protection can be implemented by connecting external noise suppression diodes across the DGC-500 contact sensing inputs. Schottky diodes, rated at 1 A, 1,000 Vdc or greater, are recommended. Figure 5-15 illustrates how the noise suppression diodes are connected in a typical DGC-500 contact input application.

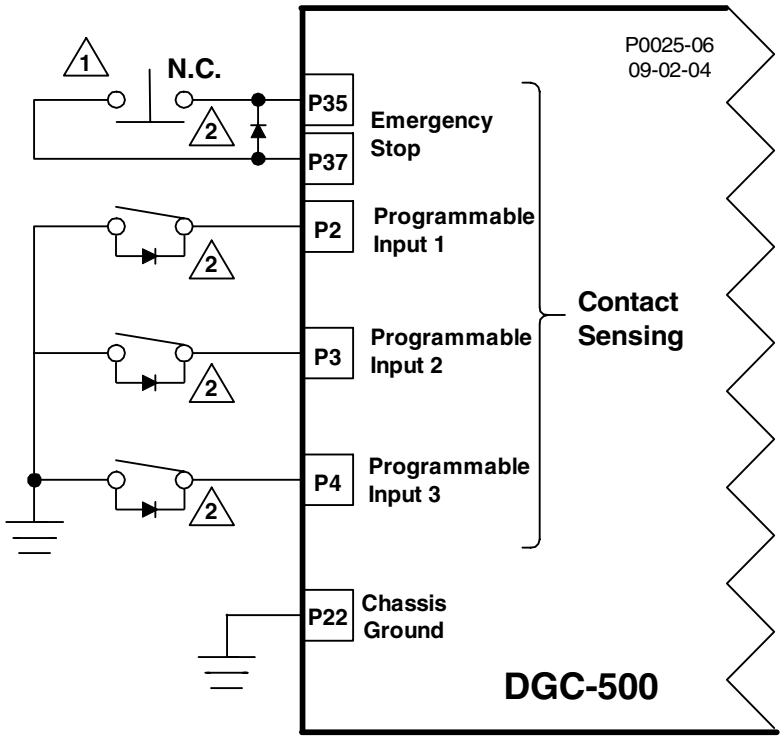

1 Jumper terminals P35 and P37 if Emergency Stop switch is not used.

2 External noise suppression diodes are rated at 1 A, 1,000 Vdc or greater.

Figure 5-15. Contact Sensing Input Connections with Noise Suppression Diodes

CALIBRATION

Prior to delivery, each DGC-500 is factory calibrated and subjected to thorough testing to ensure quality, accuracy, and performance. DGC-500 units should not require field calibration. However, the following procedure is provided for those users desiring to perform field calibration of their DGC-500.

Equipment Required

- Single-phase 240 Vac source
- Single-phase 2 Aac source
- Resistance box, 25 - 800 ohms

Entering Calibration Mode

Calibration is accomplished by performing the instructions called out on each of the HMI calibration menu screens. The calibration menu screens reside in a branch of Menu 3: Sensing Devices. Figure 5-16 illustrates the process of entering the calibration mode and the following steps describe the process.

1. Navigate to Menu 3: Sensing Devices and scroll up or down to the screen labeled INPUT CALIBRATE FUNCTION.
2. Perform the steps illustrated by Figure 5-16 to enable calibration (screen indicates FEATURE IS ON). Use the Select/Enter pushbutton to move right. Use the Raise/Scroll pushbutton to move up.

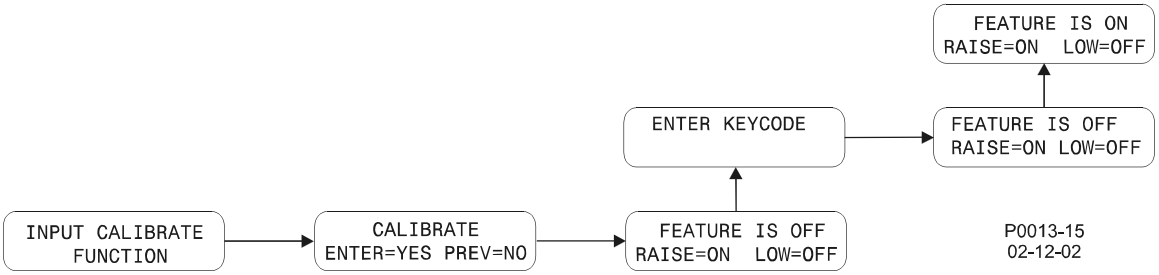

Figure 5-16. Calibration Mode Navigation

Calibration Procedure

Once calibration is enabled, the following steps are performed to calibrate the DGC-500.

After each calibration step is performed, a screen indicating the success of the previous step is displayed. Figure 5-17 shows the screens resulting from a successful calibration step and an unsuccessful calibration step.



Figure 5-17. Successful and Unsuccessful Calibration Screens

1. While viewing the FEATURE IS ON screen (illustrated in Figure 5-16), press the **Select/Enter** pushbutton to begin the calibration process. The first calibration screen (displayed at right) appears. Apply 240 Vac to the voltage sensing inputs for phase A (terminal P23) and Neutral (terminal P30). Press the **Lower/Scroll** pushbutton.

   240 VAC TO A-N
   PRESS LOWER KEY

2. Press the **Raise/Scroll** pushbutton. The screen at right is displayed. Apply 240 Vac to the voltage sensing inputs for phase B (P26) and Neutral (P30). Press the **Lower/Scroll** pushbutton.

   240 VAC TO B-N
   PRESS LOWER KEY

3. Press the **Raise/Scroll** pushbutton. The screen at right is displayed. Apply 240 Vac to the voltage sensing inputs for phase C (P29) and Neutral (P30). Press the **Lower/Scroll** pushbutton.

   240 VAC TO C-N
   PRESS LOWER KEY

4. Press the **Raise/Scroll** pushbutton. The screen at right is displayed. Apply 2 Aac to the current sensing inputs for phase A (P10 and P11). Press the **Lower/Scroll** pushbutton.

   2 AAC TO A CT
   PRESS LOWER KEY

5. Press the **Raise/Scroll** pushbutton. The screen at right is displayed. Apply 2 Aac to the current sensing inputs for phase B (P12 and P14). Press the **Lower/Scroll** pushbutton.

   2 AAC TO B CT
   PRESS LOWER KEY

6. Press the **Raise/Scroll** pushbutton. The screen at right is displayed. Apply 2 Aac to the current sensing inputs for phase V (P15 and P17). Press the **Lower/Scroll** pushbutton.

   2 AAC TO C CT
   PRESS LOWER KEY

7. Press the **Raise/Scroll** pushbutton. The screen at right is displayed. Connect a resistance of 30 ohms across the coolant temperature sender input (P18 and P19). Press the **Lower/Scroll** pushbutton.

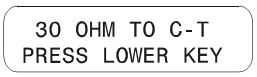

8. Press the **Raise/Scroll** pushbutton. The screen at right is displayed. Connect a resistance of 60 ohms across the coolant temperature sender input (P18 and P19). Press the **Lower/Scroll** pushbutton.

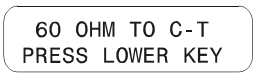

9. Press the **Raise/Scroll** pushbutton. The screen at right is displayed. Connect a resistance of 100 ohms across the coolant temperature sender input (P18 and P19). Press the **Lower/Scroll** pushbutton.

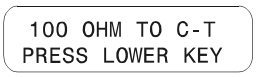

10. Press the **Raise/Scroll** pushbutton. The screen at right is displayed. Connect a resistance of 150 ohms across the coolant temperature sender input (P18 and P19). Press the **Lower/Scroll** pushbutton.

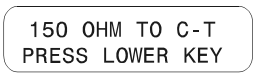

11. Press the **Raise/Scroll** pushbutton. The screen at right is displayed. Connect a resistance of 200 ohms across the coolant temperature sender input (P18 and P19). Press the **Lower/Scroll** pushbutton.

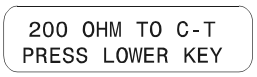

12. Press the **Raise/Scroll** pushbutton. The screen at right is displayed. Connect a resistance of 300 ohms across the coolant temperature sender input (P18 and P19). Press the **Lower/Scroll** pushbutton.

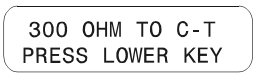

13. Press the **Raise/Scroll** pushbutton. The screen at right is displayed. Connect a resistance of 400 ohms across the coolant temperature sender input (P18 and P19). Press the **Lower/Scroll** pushbutton.

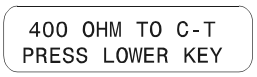

14. Press the **Raise/Scroll** pushbutton. The screen at right is displayed. Connect a resistance of 600 ohms across the coolant temperature sender input (P18 and P19). Press the **Lower/Scroll** pushbutton.

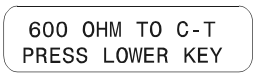

15. Press the **Raise/Scroll** pushbutton. The screen at right is displayed. Connect a resistance of 800 ohms across the coolant temperature sender input (P18 and P19). Press the **Lower/Scroll** pushbutton.

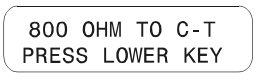

16. Press the **Raise/Scroll** pushbutton. The screen at right is displayed. Connect a resistance of 25 ohms across the oil pressure sender input (P13 and P19). Press the **Lower/Scroll** pushbutton.

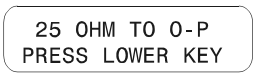

17. Press the **Raise/Scroll** pushbutton. The screen at right is displayed. Connect a resistance of 50 ohms across the oil pressure sender input (P13 and P19). Press the **Lower/Scroll** pushbutton.

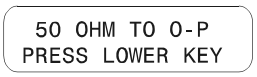

18. Press the **Raise/Scroll** pushbutton. The screen at right is displayed. Connect a resistance of 75 ohms across the oil pressure sender input (P13 and P19). Press the **Lower/Scroll** pushbutton.

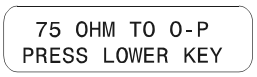

19. Press the **Raise/Scroll** pushbutton. The screen at right is displayed. Connect a resistance of 100 ohms across the oil pressure sender input (P13 and P19). Press the **Lower/Scroll** pushbutton.

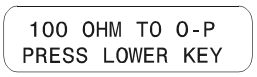

20. Press the **Raise/Scroll** pushbutton. The screen at right is displayed. Connect a resistance of 125 ohms across the oil pressure sender input (P13 and P19). Press the **Lower/Scroll** pushbutton.

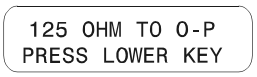

21. Press the **Raise/Scroll** pushbutton. The screen at right is displayed. Connect a resistance of 150 ohms across the oil pressure sender input (P13 and P19). Press the **Lower/Scroll** pushbutton.

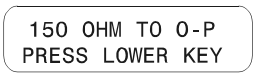

22. Press the **Raise/Scroll** pushbutton. The screen at right is displayed. Connect a resistance of 175 ohms across the oil pressure sender input (P13 and P19). Press the **Lower/Scroll** pushbutton.

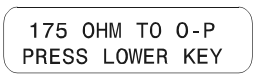

23. Press the **Raise/Scroll** pushbutton. The screen at right is displayed. Connect a resistance of 200 ohms across the oil pressure sender input (P13 and P19). Press the **Lower/Scroll** pushbutton.

```
200 OHM TO O-P
PRESS LOWER KEY
```

24. Press the **Raise/Scroll** pushbutton. The screen at right is displayed. Connect a resistance of 225 ohms across the oil pressure sender input (P13 and P19). Press the **Lower/Scroll** pushbutton.

```
225 OHM TO O-P
PRESS LOWER KEY
```

After step 24 is completed successfully and the Raise/Scroll pushbutton is pressed, the INPUT CALIBRATE FUNCTION screen appears and signals that calibration is complete.

SECTION 6 • MAINTENANCE AND TROUBLESHOOTING

PREVENTATIVE MAINTENANCE

The only preventative maintenance required on the DGC-500 is to periodically check that the connections between the DGC-500 and the system are clean and tight. DGC-500 units are manufactured using state-of-the-art, surface-mount technology. As such, Basler Electric recommends that no repair procedures be attempted by anyone other than Basler Electric personnel.

TROUBLESHOOTING

If you do not get the results that you expect from the DGC-500, first check the programmable settings for the appropriate function. Use the following troubleshooting procedures when difficulties are encountered in the operation of your genset control system.

Incorrect Display of Battery Voltage, Coolant Temperature, Oil Pressure, or Fuel Level

Step 1. Verify that all wiring is properly connected. Refer to Figures 5-5 through 5-7.

Step 2. Confirm that the SENDER COMM terminal (P19) is connected to the negative battery terminal and the engine-block side of the senders. Current from other devices sharing this connection can cause erroneous readings.

Step 3. If the displayed battery voltage is incorrect, ensure that the proper voltage is present between the BATT+ terminal (P20) and the SENDER COMM terminal (P19).

Step 4. Verify that the correct senders are being used.

Step 5. Verify that the correct sender curves are being used.

Step 6. Ensure that the senders are operating properly.

Incorrect Display of Generator Voltage

Step 1. Verify that all wiring is properly connected. Refer to Figures 5-5 through 5-7.

Step 2. Ensure that the proper voltage is present at the DGC-500 voltage sensing inputs (P23, P26, P29, and P30).

Step 3. Verify that the voltage transformer ratio and sensing configuration is correct.

Step 4. Confirm that the voltage sensing transformers are correct and properly installed.

Incorrect Measurement or Display of Generator Current

Step 1. Verify that all wiring is properly connected. Refer to Figures 5-5 through 5-7.

Step 2. Ensure that the proper current is present at the DGC-500 current sensing inputs (P10 - P17).

Step 3. Verify that the current sensing transformer ratios are correct.

Step 4. Confirm that the current sensing transformers are correct and properly installed.

Incorrect Display of Engine RPM

Step 1. Verify that all wiring is properly connected. Refer to Figures 5-5 through 5-7.

Step 2. Verify that the flywheel teeth setting is correct.

Step 3. Confirm the nominal frequency setting.

Step 4. Verify that the prime mover governor is operating properly.

Step 5. Verify that the measured frequency of the voltage at the MPU input (P39 and P40) is correct.

Step 6. If the MPU is shared with the governor, verify that the polarity of the MPU input to the governor matches the polarity of the MPU input to the DGC-500.

Katolight Service - Master Repair Manual - Page 1922

Programmable Inputs Do Not Operate as Expected

Step 1. Verify that all wiring is properly connected. Refer to Figures 5-5 through 5-7.

Step 2. Confirm that the inputs are programmed properly.

Step 3. Ensure that the input at the DGC-500 is actually connected to the BATT– terminal (P21).

Programmable Outputs Do Not Operate as Expected

Step 1. Verify that all wiring is properly connected. Refer to Figures 5-5 through 5-7.

Step 2. Confirm that the outputs are programmed properly.

Communication Port Does Not Operate Properly

Step 1. Verify that the proper port of your computer is being used.

Step 2. Confirm that the correct baud rate is being used.

Step 3. Verify that the connection between the computer and the DGC-500 is correct. Ensure that a straight-through serial cable is being used.

APPENDIX A • TIME OVERCURRENT CHARACTERISTIC CURVES

TABLE OF CONTENTS

APPENDIX A • TIME OVERCURRENT CHARACTERISTIC CURVES A-1
GENERAL A-1
CURVE SPECIFICATIONS A-1
TIME OVERCURRENT CHARACTERISTIC CURVE GRAPHS A-2
Time Dial Setting Cross-Reference A-3
Using Table A-3 . . . . . A-3

Figures

Figure A-1. Time Characteristic Curve S, S1 Short Inverse (Similar to ABB CO-2) A-5
Figure A-2. Time Characteristic Curve S2, Short Inverse (Similar to GE IAC-55) A-6
Figure A-3. Time Characteristic Curve L1, Long Inverse (Similar to ABB CO-5) A-7
Figure A-4. Time Characteristic Curve L2, Long Inverse (Similar to GE IAC-66) A-8
Figure A-5. Time Characteristic Curve D, Definite Time (Similar to ABB CO-6) A-9
Figure A-6. Time Characteristic Curve M, Moderately Inverse (Similar to ABB CO-7) A-10
Figure A-7. Time Characteristic Curve I1 Inverse Time (Similar to ABB CO-8) A-11
Figure A-8. Time Characteristic Curve I2, Inverse Time (Similar to GE IAC-51) A-12
Figure A-9. Time Characteristic Curve V, V1, Very Inverse (Similar to ABB CO-9) A-13
Figure A-10. Time Characteristic Curve V2, Very Inverse (Similar to GE IAC-53) A-14
Figure A-11. Time Characteristic Curve E1, Extremely Inverse (Similar to GE IAC-11) A-15
Figure A-12. Time Characteristic Curve E2, Extremely Inverse (Similar to GE IAC-77) A-16
Figure A-13. Time Characteristic Curve A, Standard Inverse A-17
Figure A-14. Time Characteristic Curve B, Very Inverse A-18
Figure A-15. Time Characteristic Curve C, Extremely Inverse A-19
Figure A-16. Time Characteristic Curve G, Long Inverse A-20

Tables

Table A-1. Time Characteristic Curve Constants A-2
Table A-2. Characteristic Curve Cross-Reference A-3
Table A-3. Characteristic Curve Cross-Reference A-4

Katolight Service - Master Repair Manual - Page 1924

This page intentionally left blank.

Katolight Service - Master Repair Manual - Page 1925

APPENDIX A • TIME OVERCURRENT CHARACTERISTIC CURVES

INTRODUCTION

The inverse time overcurrrent characteristic curves provided by the DGC-500 (style XXX1 only) closely emulate most of the common electromechanical, induction-disk, overcurrent relays sold in North America.

CURVE SPECIFICATIONS

Timing Accuracy

Within ±500 milliseconds of indicated operating point

Sixteen inverse time functions, one fixed time function and one programmable time function can be selected. Characteristic curves for the inverse and definite time functions are defined by the following equation:

$$T_T = \frac{A \bullet D}{M^N - C} + B \bullet D + K$$

T_T	=	Time to trip when M ≥ 1.
T_R	=	Time to reset if relay is set for integrating reset when M < 1. Otherwise, reset is 50 milliseconds or less.
D	=	TIME DIAL setting (0.0 to 9.9).
M	=	Multiple of PICKUP setting (0 to 40)
A, B, C, N, K	=	Constants for the particular curve.

This equation complies with IEEE Standard C37.112-1996.

Table A-1 lists the time characteristic curve constants. See Figures A-1 through A-16 for graphs of the characteristics.

Katolight Service - Master Repair Manual - Page 1926

Table A-1. Time Characteristic Curve Constants

Curve Selection	BE Curve Name	Trip Characteristic Constants				
		A	B	C	N	K
S1	S, Short Inverse	0.2663	0.03393	1.0000	1.2969	0.0280
S2	S2, Short Inverse	0.029	0.02080	1.0000	0.9844	0.0280
L1	L1, Long Inverse	5.6143	2.18592	1.0000	1.0000	0.0280
L2	L2, Long Inverse	2.3955	0.00000	1.0000	0.3125	0.0280
D	D, Definite Time	0.4797	0.21359	1.0000	1.5625	0.0280
M	M, Moderately Inverse	0.3022	0.12840	1.0000	0.5000	0.0280
I1	I, Inverse Time	8.9341	0.17966	1.0000	2.0938	0.0280
I2	Inverse Time	0.2747	0.10426	1.0000	0.4375	0.0280
V1	V, Very Inverse	5.4678	0.10814	1.0000	2.0469	0.0280
V2	V2, Very Inverse	4.4309	0.09910	1.0000	1.9531	0.0280
E1	Extremely Inverse	7.7624	0.02758	1.0000	2.0938	0.0280
E2	E2, Extremely Inverse	4.9883	0.01290	1.0000	2.0469	0.0280
A	Standard Inverse	0.014	0.00000	1.0000	0.0200	0.0280
B	B, Very Inverse (I^2t)	1.4636	0.00000	1.0000	1.0469	0.0280
C	Extremely Inverse (I^2t)	8.2506	0.00000	1.0000	2.0469	0.0280
G	Long Time Inverse (I^2t)	12.121	0.00000	1.0000	1.0000	0.0280
F	Fixed Time ✳	0	1.00000	1.0000	0.0000	0.0280

✳ Curve F has a fixed delay of one second times the Time Dial setting.

TIME OVERCURRENT CHARACTERISTIC CURVE GRAPHS

Figures A-1 through A-16 illustrate the characteristic curves of the DGC-500. Table A-2 cross-references each curve to existing electromechanical relay characteristics. Equivalent time dial settings were calculated at a value of five times pickup.

Table A-2. Characteristic Curve Cross-Reference

Curve	Curve Name	Similar To
S1	S, Short Inverse	ABB CO-2
S2	S2, Short Inverse	GE IAC-55
L1	L, L1, Long Inverse	ABB CO-5
L2	L2, Long Inverse	GE IAC-66
D	D, Definite Time	ABB CO-6
M	M, Moderately Inverse	ABB CO-7
I1	I, I1 Inverse Time	ABB CO-8
I2	I2 Inverse Time	GE IAC-51
V1	V, V1 Very Inverse	ABB CO-9
V2	V2, Very Inverse	GE IAC-53
E1	E, E1 Extremely Inverse	ABB CO-11
E2	E2, Extremely Inverse	GE IAC-77
A	A Standard Inverse	BS, IEC Standard Inverse
B	B, Very Inverse (It)	BS, IEC Very Inverse (I^2t)
C	Extremely Inverse (I^2t)	BS, IEC Extremely Inverse (I^2t)
G	Long Time Inverse	BS, IEC Long Time Inverse
F	Fixed Time	N/A

Time Dial Setting Cross-Reference

Although the time characteristic curve shapes have been optimized for the DGC-500, the DGC-500 time dial settings are not identical to the settings of electromechanical induction disk overcurrent relays. Table A-3 helps you convert the time dial settings of induction disk relays to the equivalent setting for the DGC-500.

Using Table A-3

Cross-reference table values were obtained by inspection of published electromechanical time current characteristic curves. The time delay for a current of five times tap was entered into the time dial calculator function for each time dial setting. The equivalent DGC-500 time dial setting was then entered into the cross-reference table.

If your electromechanical relay time dial setting is between the values provided in the table, it will be necessary to interpolate (estimate the correct intermediate value) between the electromechanical setting and the Basler Electric setting.

The DGC-500 has a maximum time dial setting of 9.9. The Basler Electric equivalent time dial setting for the electromechanical maximum setting is provided in the cross-reference table even if it exceeds 9.9. This allows interpolation, as noted above.

Basler Electric time current characteristics are determined by a linear mathematical equation. The induction disk of an electromechanical relay has a certain degree of non-linearity due to inertial and friction effects. For this reason, even though every effort has been made to provide characteristic curves with minimum deviation from the published electromechanical curves, slight deviations can exist between them.

In applications where the time coordination between curves is extremely close, we recommend that you choose the optimal time dial setting by inspection of the coordination study. In applications where coordination is tight, it is recommended that you retrofit your circuits with Basler Electric electronic relays to ensure high timing accuracy.

Table A-3. Characteristic Curve Cross-Reference

Curve Name	Equivalent to	Electromechanical Relay Time Dial Setting											
		0.5	1.0	2.0	3.0	4.0	5.0	6.0	7.0	8.0	9.0	10.0	11.0
		Basler Electric Equivalent Time Dial Setting											
S, S1	ABB CO-2	0.3	0.8	1.7	2.4	3.4	4.2	5.0	5.8	6.7	7.7	8.6	9.7
L, L1	ABB CO-5	0.4	0.8	1.5	2.3	3.3	4.2	5.0	6.0	7.0	7.8	8.8	9.9
D	ABB CO-6	0.5	1.1	2.0	2.9	3.7	4.5	5.0	5.9	7.2	8.0	8.9	10.1
M	ABB CO-7	0.4	0.8	1.7	2.5	3.3	4.3	5.3	6.1	7.0	8.0	9.0	9.8
I, I1	ABB CO-8	0.3	0.7	1.5	2.3	3.2	4.0	5.0	5.8	6.8	7.6	8.7	10.0
V, V1	ABB CO-9	0.3	0.7	1.4	2.1	3.0	3.9	4.8	5.7	6.7	7.8	8.7	9.6
E, E1	ABB CO-11	0.3	0.7	1.5	2.4	3.2	4.2	5.0	5.7	6.6	7.8	8.5	10.3
I2	GE IAC-51	0.6	1.0	1.9	2.7	3.7	4.8	5.7	6.8	8.0	9.3	10.6	
V2	GE IAC-53	0.4	0.8	1.6	2.4	3.4	4.3	5.1	6.3	7.2	8.4	9.6	
S2	GE IAC-55	0.2	1.0	2.0	3.1	4.0	4.9	6.1	7.2	8.1	8.9	9.8	
L2	GE IAC-66	0.4	0.9	1.8	2.7	3.9	4.9	6.3	7.2	8.5	9.7	10.9	
E2	GE IAC-77	0.5	1.0	1.9	2.7	3.5	4.3	5.2	6.2	7.4	8.2	9.9	

Katolight Service - Master Repair Manual - Page 1929

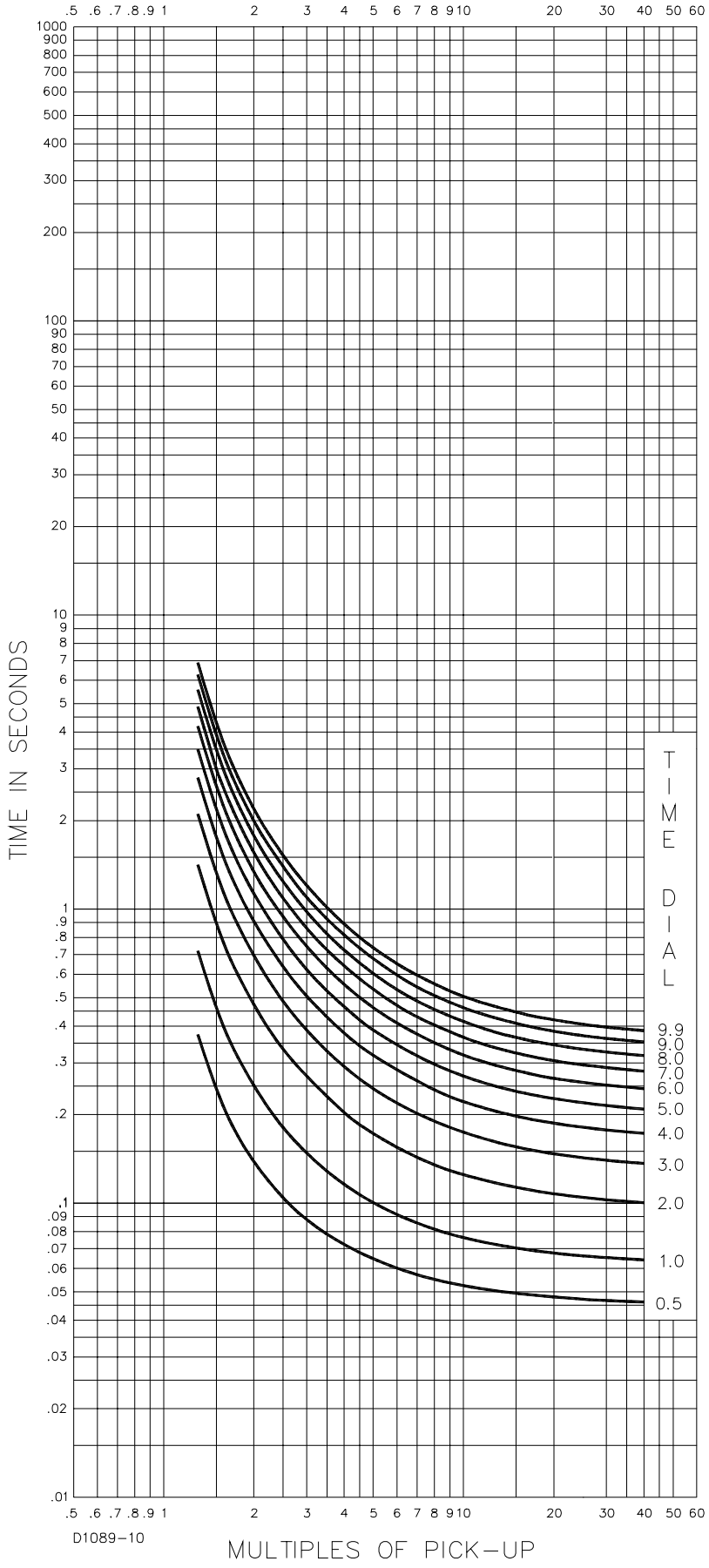

Figure A-1. Time Characteristic Curve S1 Short Inverse (Similar to ABB CO-2)

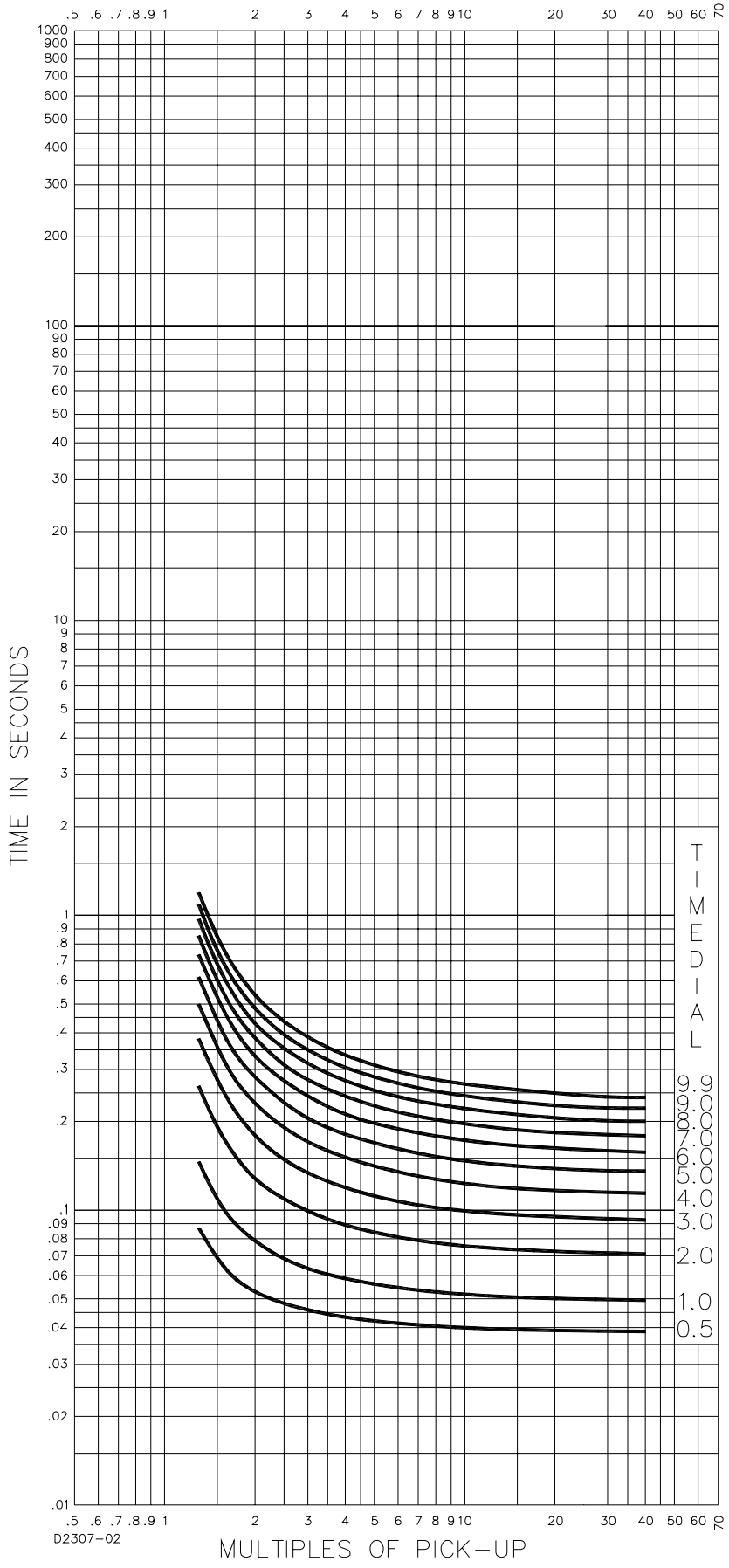

Figure A-2.Time Characteristic Curve S2, Short Inverse (Similar to GE IAC-55)

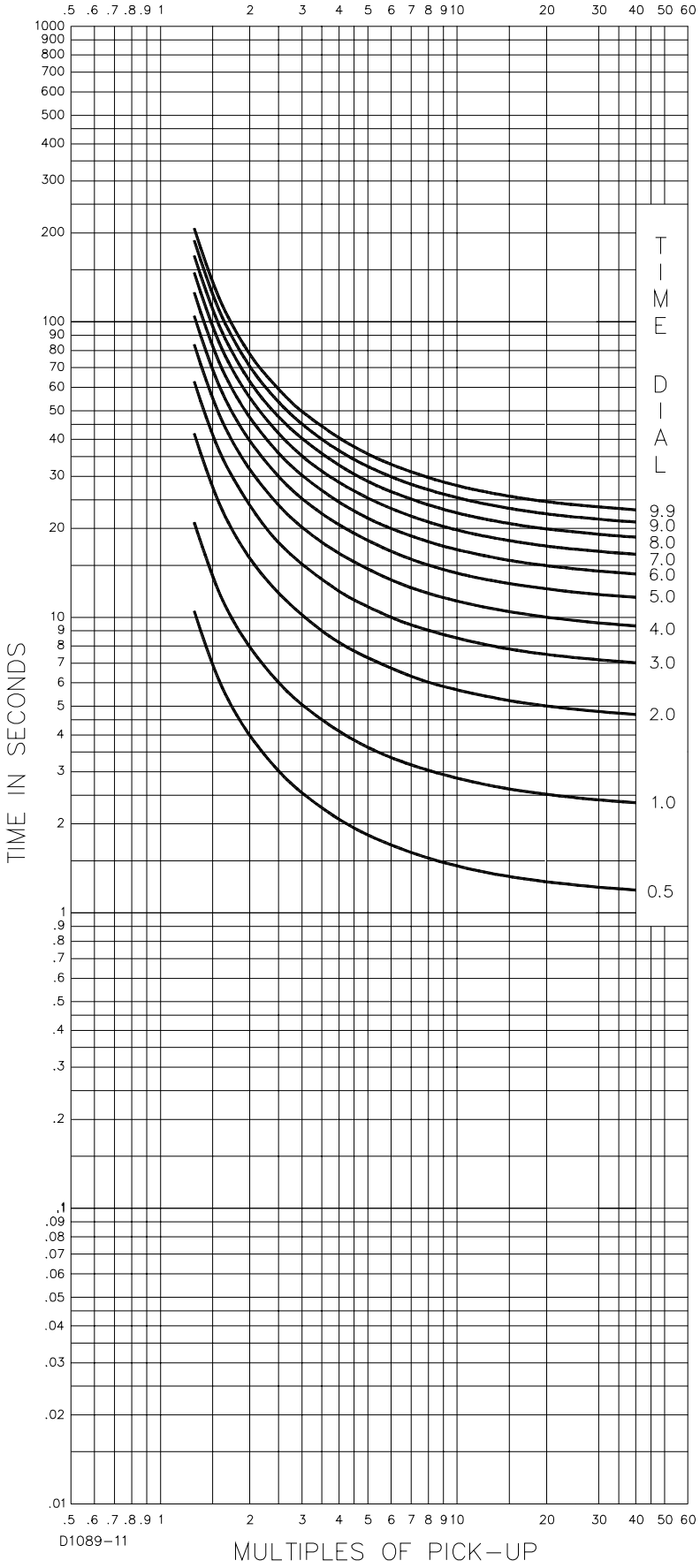

Figure A-3. Time Characteristic Curve L1, Long Inverse (Similar to ABB CO-5)

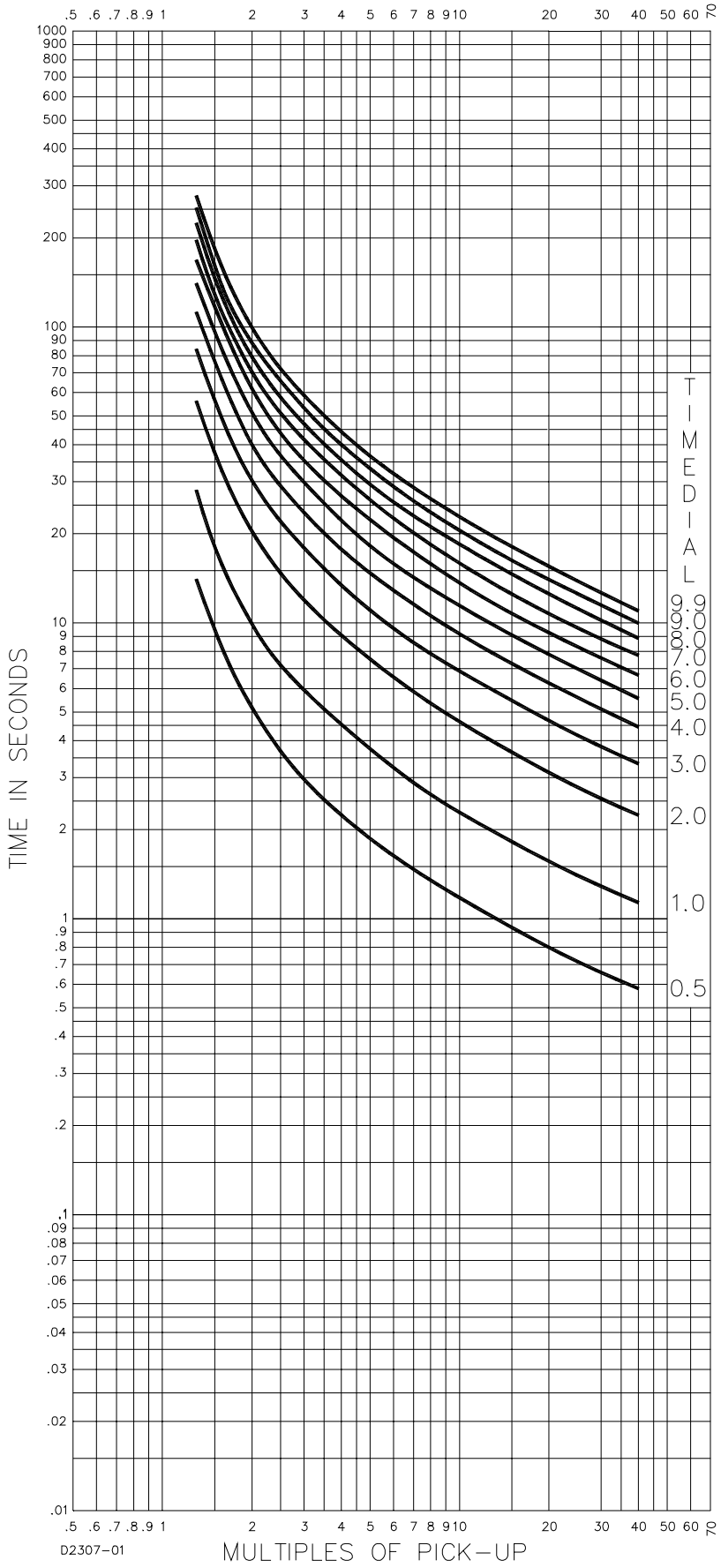

Figure A-4. Time Characteristic Curve L2, Long Inverse (Similar to GE IAC-66)

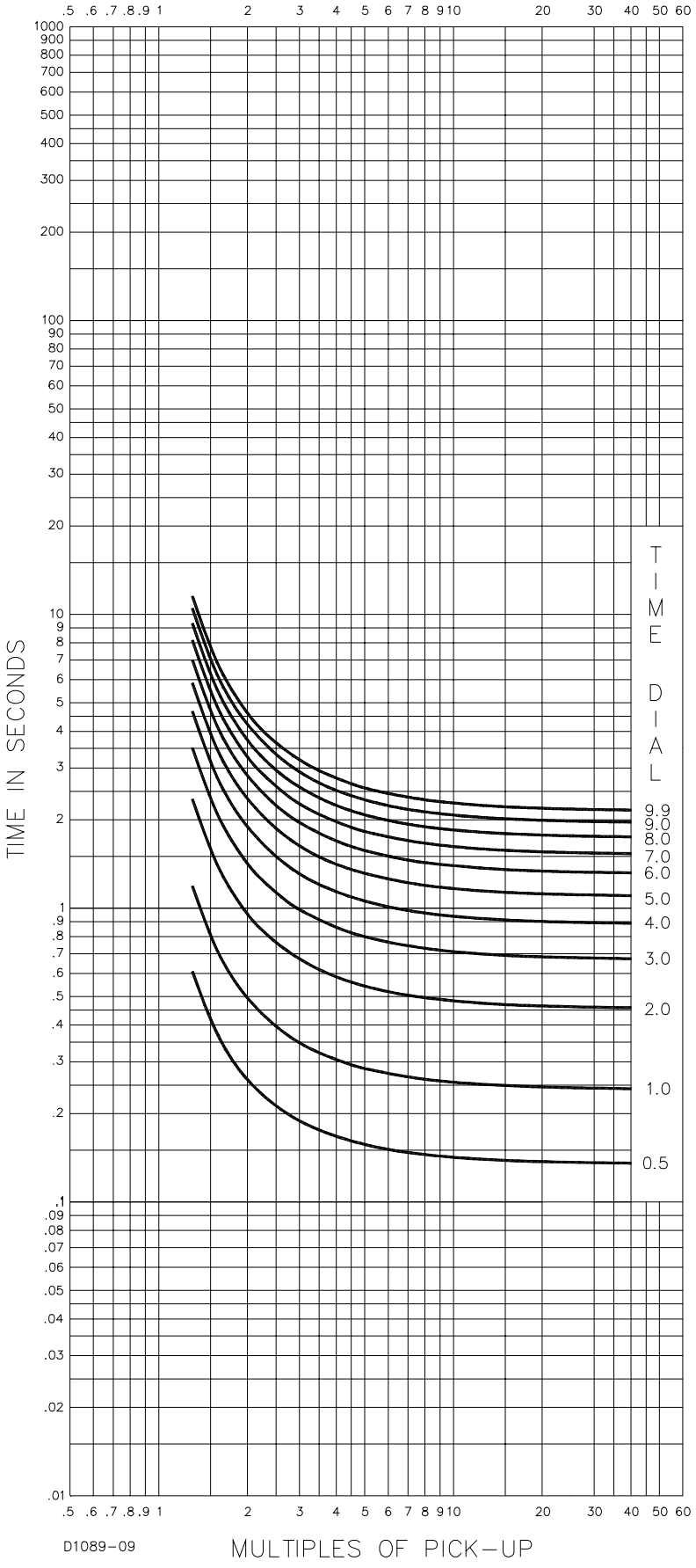

Figure A-5. Time Characteristic Curve D, Definite Time (Similar to ABB CO-6)

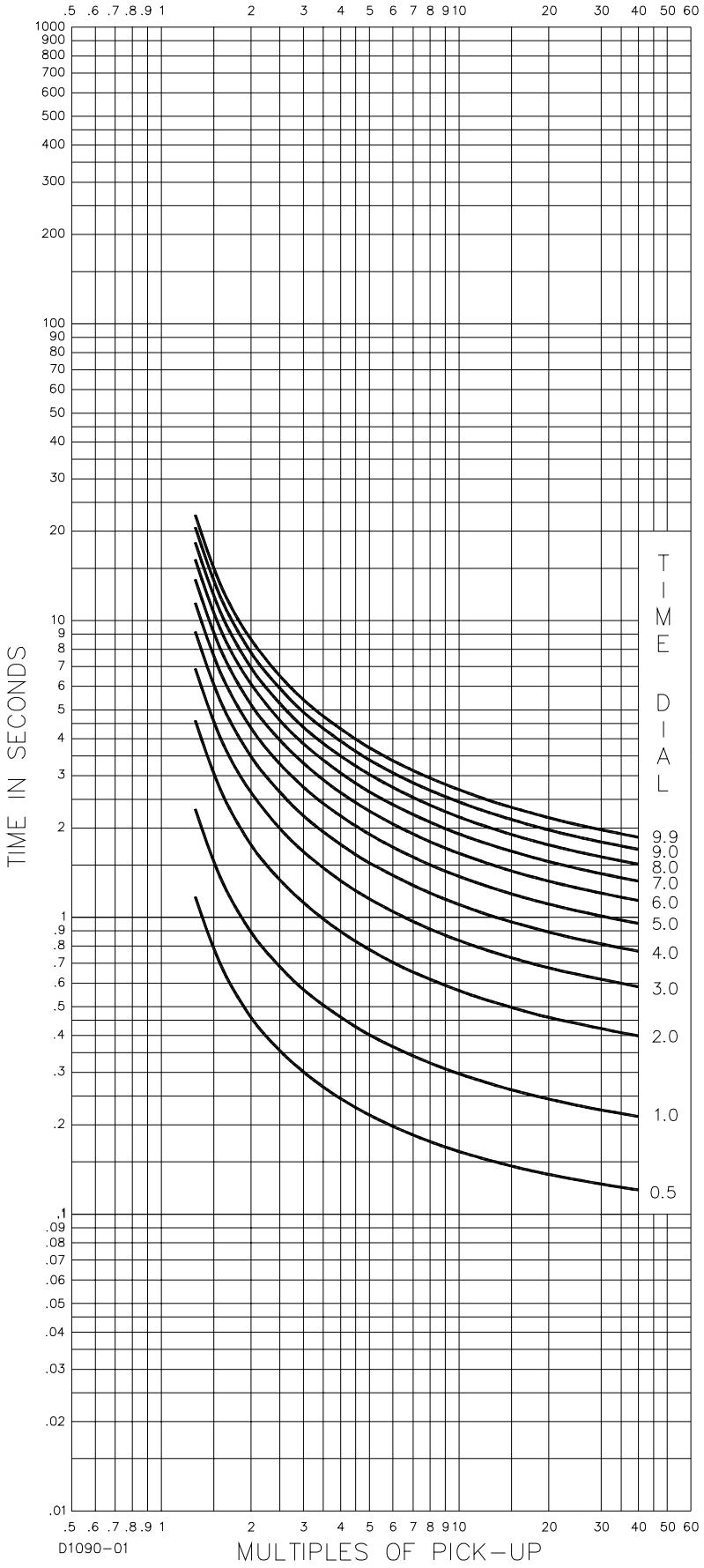

Figure A-6. Time Characteristic Curve M, Moderately Inverse (Similar to ABB CO-7)

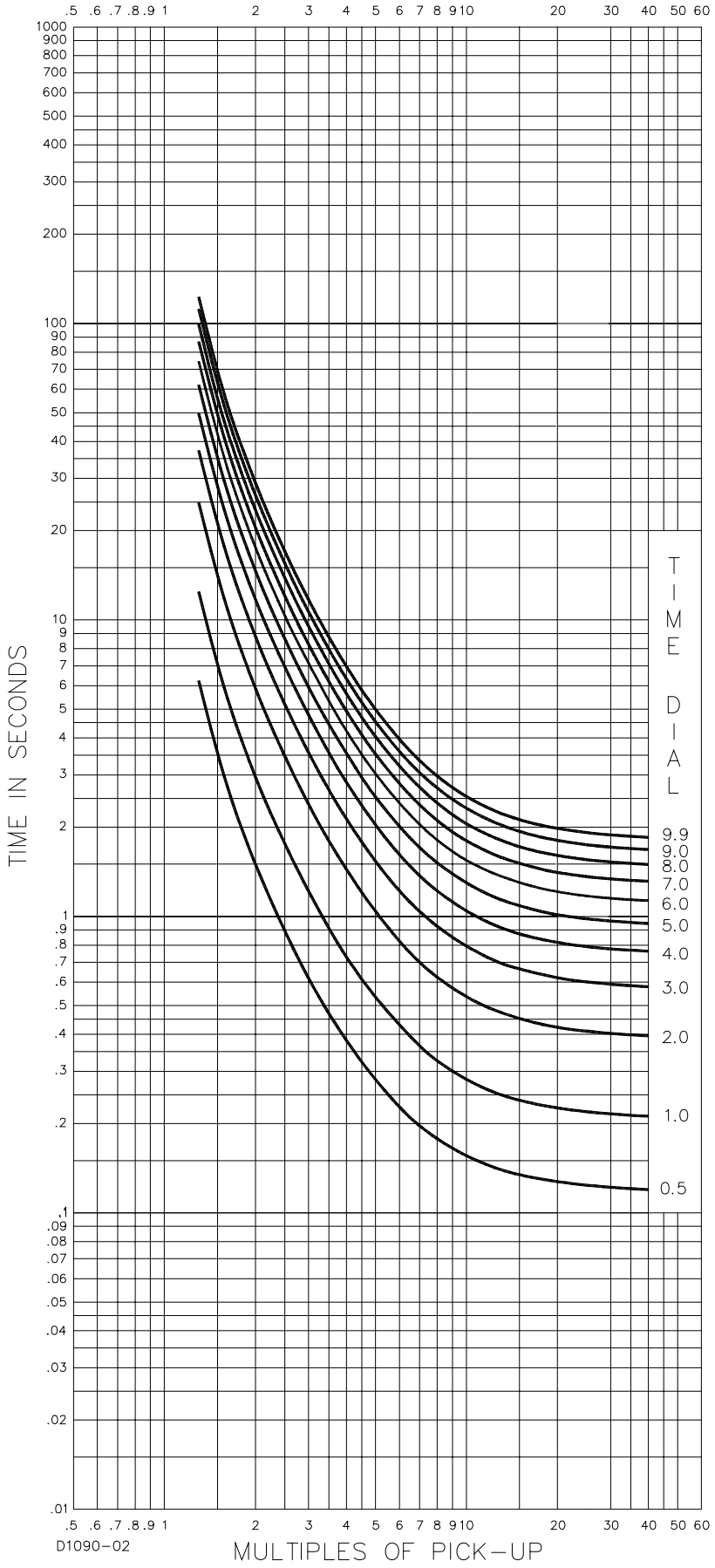

Figure A-7. Time Characteristic Curve I1 Inverse Time (Similar to ABB CO-8)

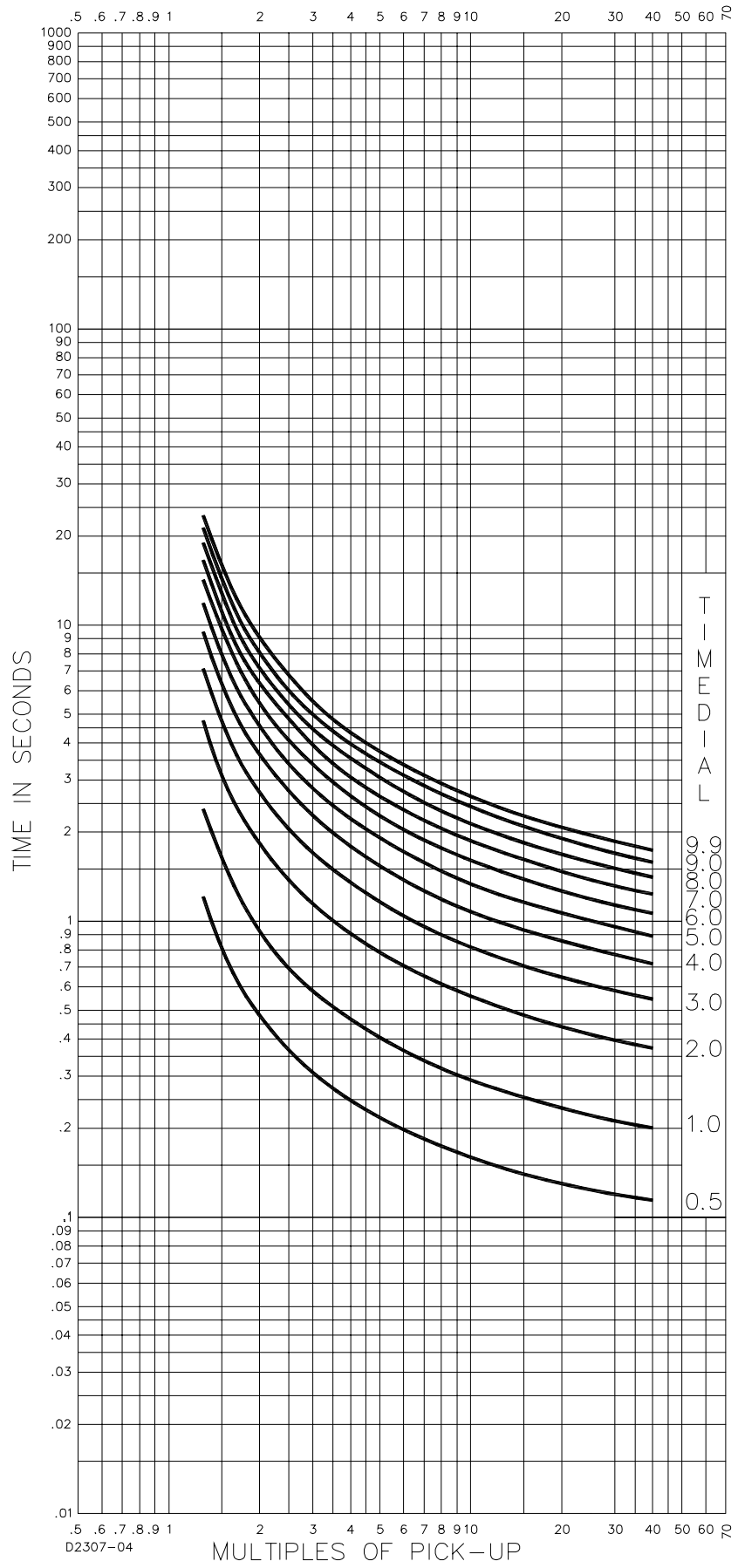

Figure A-8. Time Characteristic Curve I2, Inverse Time (Similar to GE IAC-51)

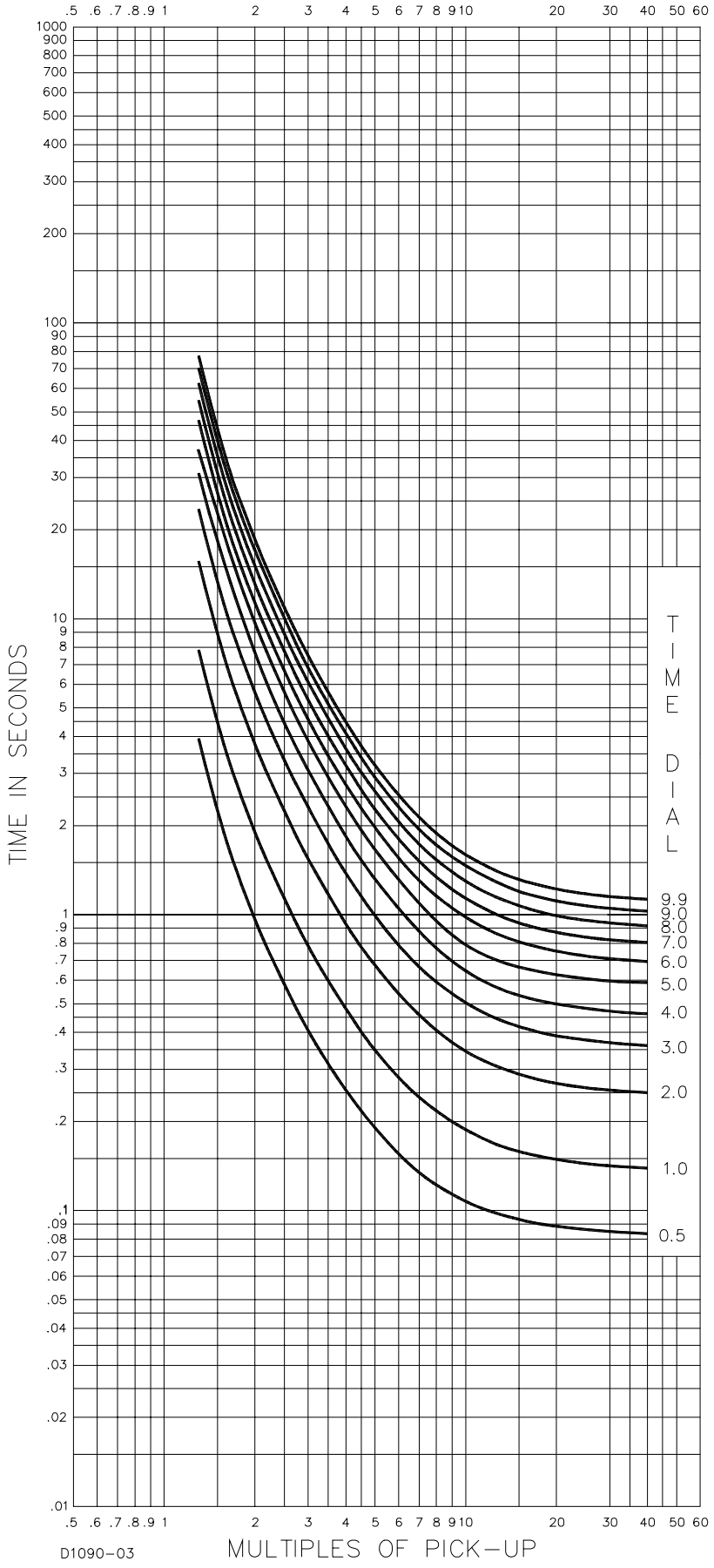

Figure A-9. Time Characteristic Curve V, V1, Very Inverse (Similar to ABB CO-9)

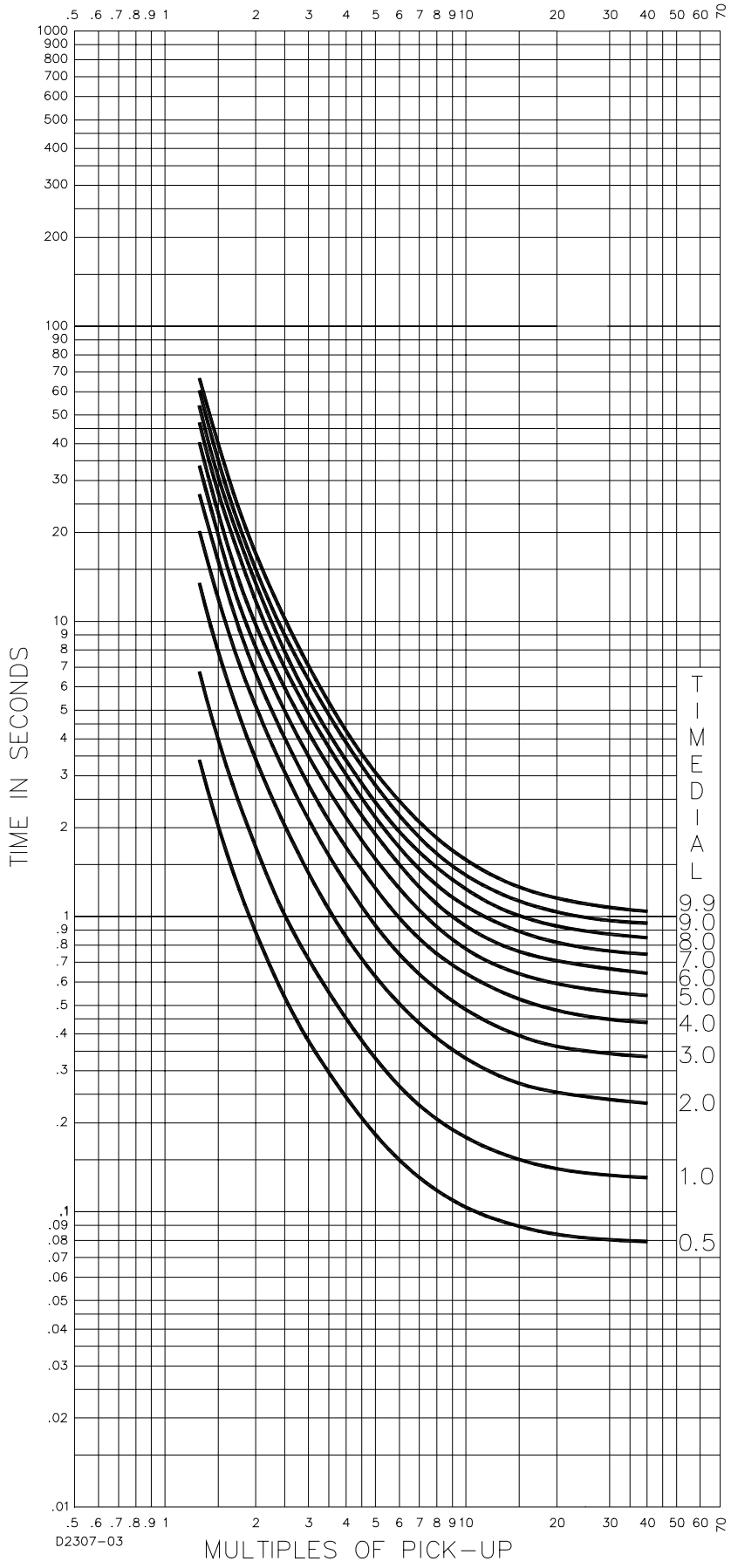

Figure A-10. Time Characteristic Curve V2, Very Inverse (Similar to GE IAC-53)

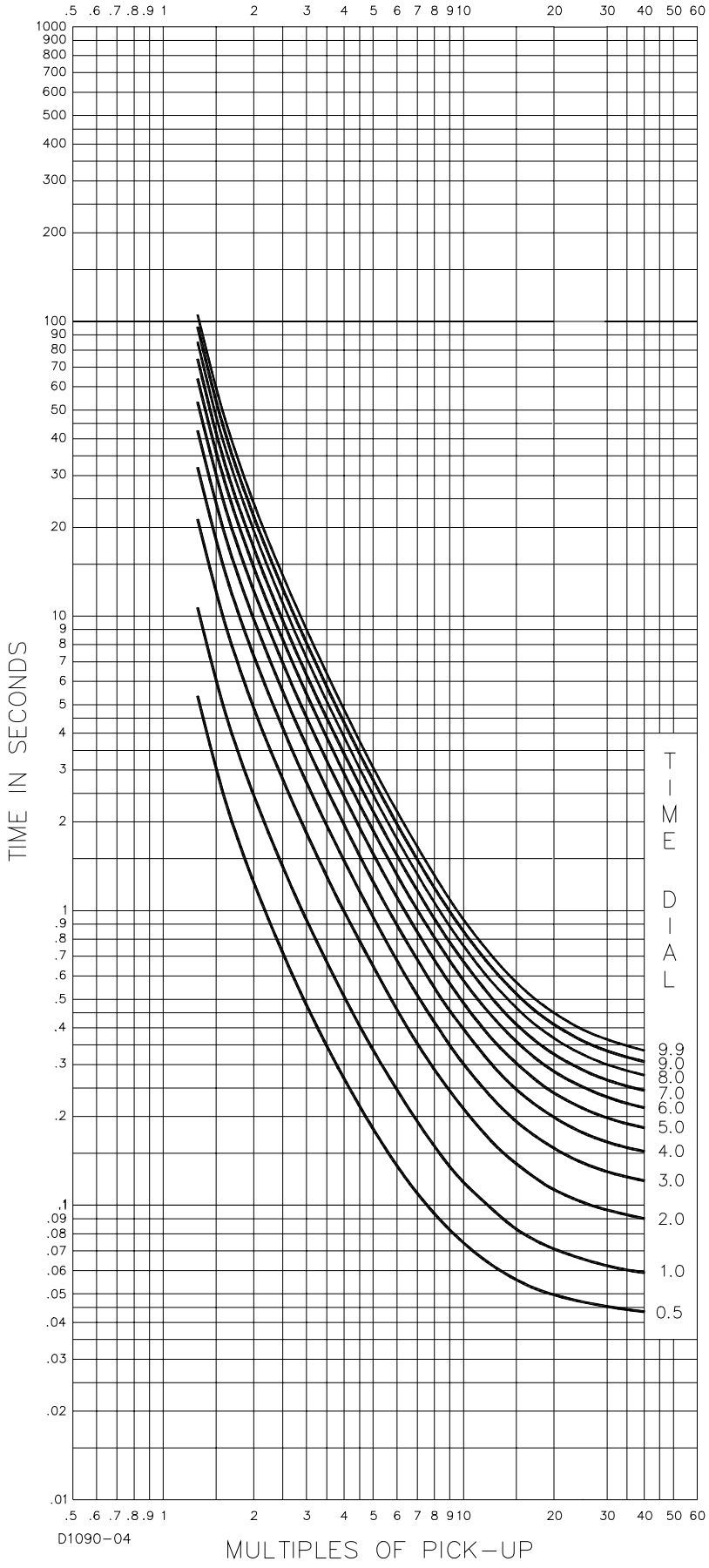

Figure A-11. Time Characteristic Curve E1, Extremely Inverse (Similar to GE IAC-11)

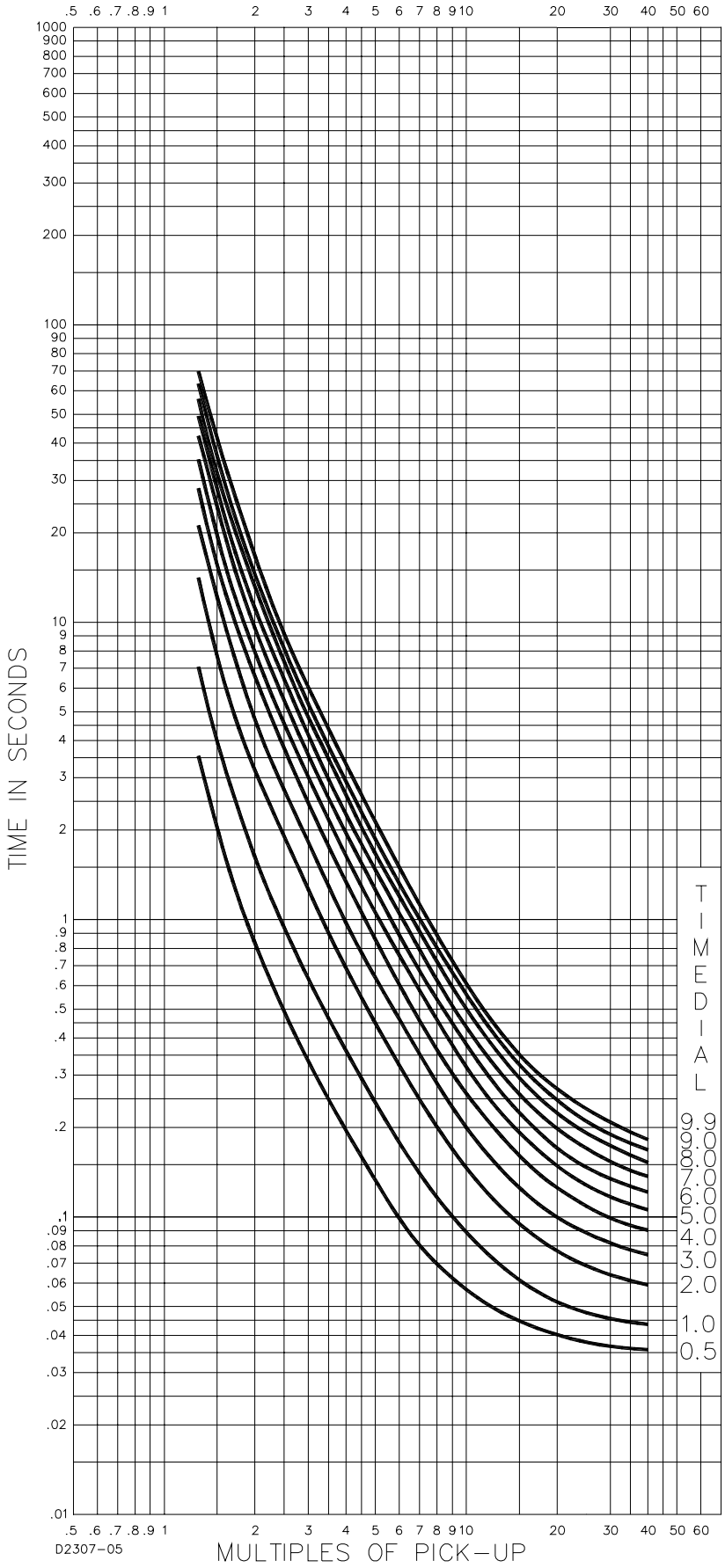

Figure A-12. Time Characteristic Curve E2, Extremely Inverse (Similar to GE IAC-77)

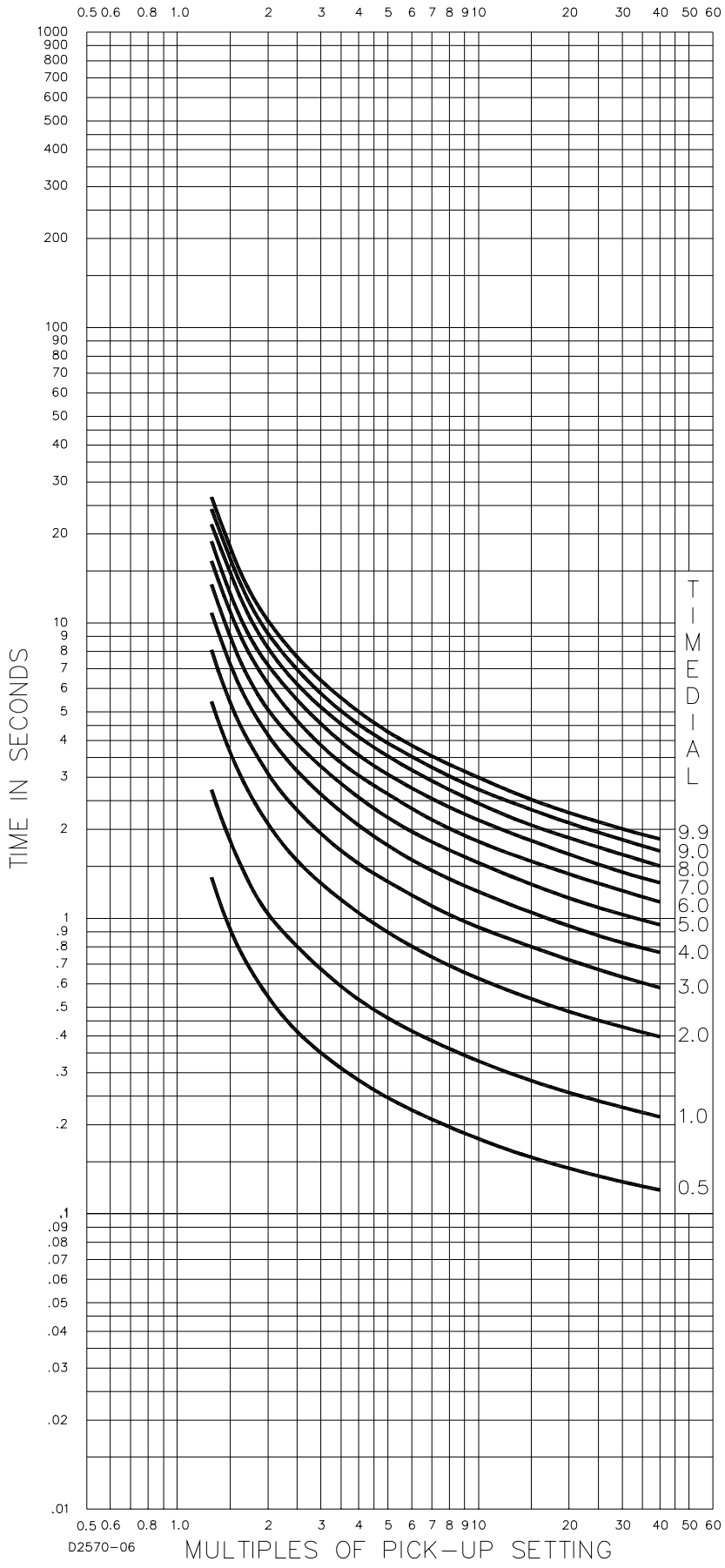

Figure A-13. Time Characteristic Curve A, Standard Inverse

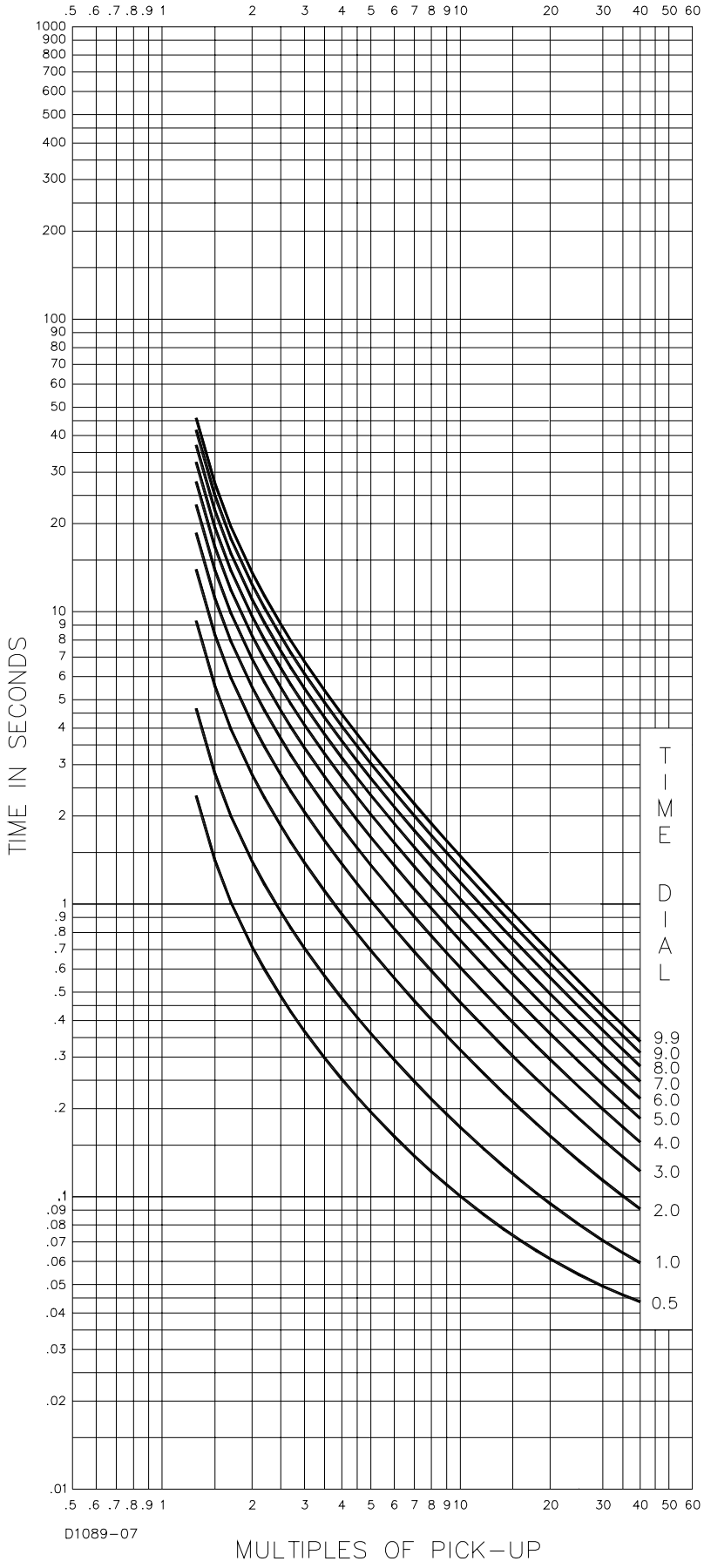

Figure A-14. Time Characteristic Curve B, Very Inverse

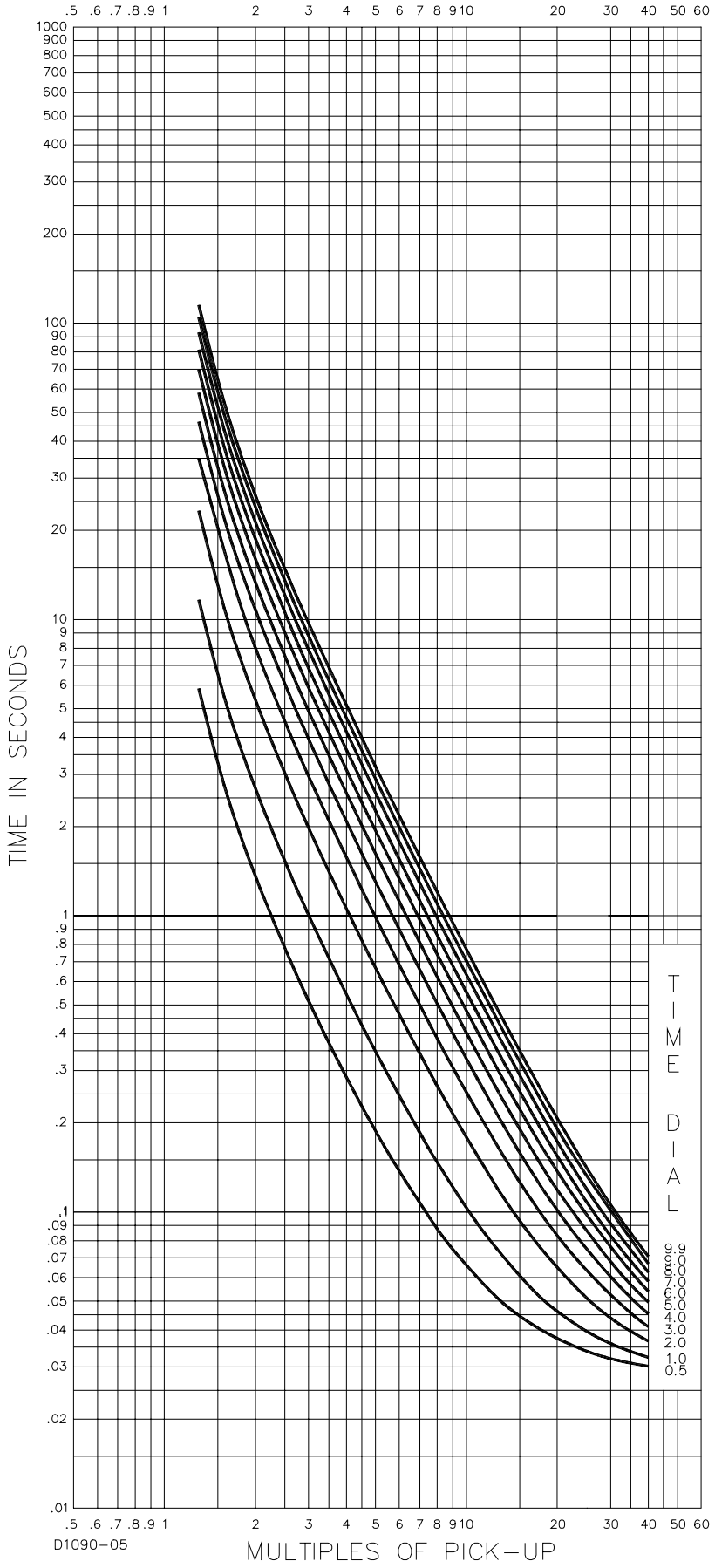

Figure A-15. Time Characteristic Curve C, Extremely Inverse

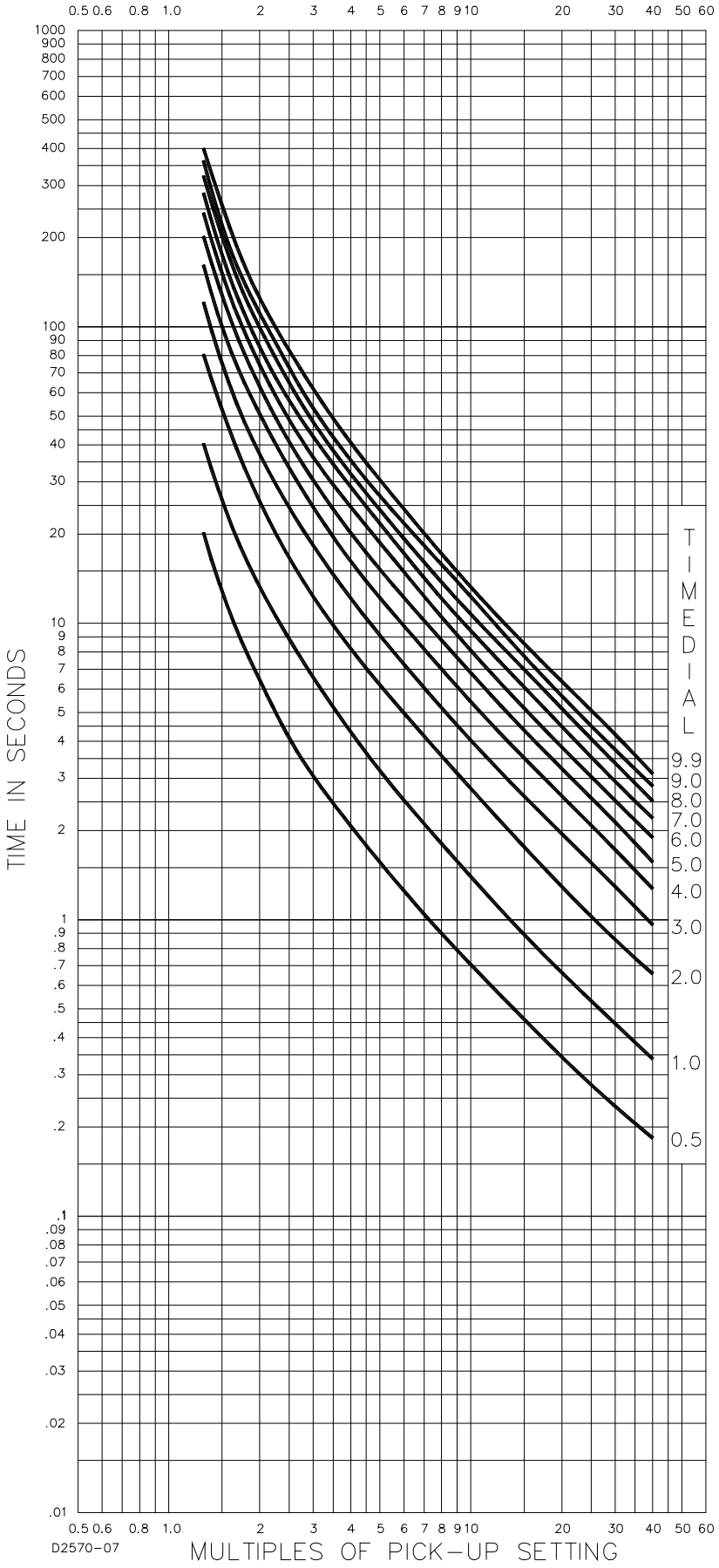

Figure A-16. Time Characteristic Curve G, Long Inverse

APPENDIX B • PARAMETERS AND SETTINGS

INTRODUCTION

This appendix lists all DGC-500 parameters along with the setting range/selections for each parameter.

FRONT PANEL ADJUSTABLE PARAMETERS

Table B-1 lists the DGC-500 settings that can be adjusted through the HMI.

Table B-1. HMI Adjustable Settings

Parameter	Range
Cool-Down Time Delay	0 - 60 min
Date	01/01/2000 - 12/31/2099
Daylight Saving Time	On/Off
Engine Maintenance Cycle Hours Pre-Alarm	Reset/Normal
LCD Contrast	25 - 75%
Low Fuel Alarm	0 - 100%
Low Fuel Pre-Alarm	10 - 100%
Metric Conversion	On/Off
Pre-Crank Time Delay	0 - 30 sec
Pre-Start Contact Status After Disconnect	On/Off
Sender Failure Alarm Time	1 - 30 sec
Time	00:00:00 to 23:59:59

ALL PARAMETERS

Table B-2 lists each DGC-500 parameter in alphabetical order. The setting range or nomenclature used by the HMI and the BESTCOMS interface is listed beside each parameter.

Table B-2 DGC-500 Settings

Parameter	Setting Range
Accelerator Position	0 - 100%
Accumulated Engine Runtime	0 - 99,999 hrs, 59 min
Battery Overvoltage Pre-Alarm Enable	On or Off
Battery Overvoltage Pre-Alarm Threshold	Off, 15 Vdc, or 30 Vdc
Battery Charger Failure Pre-Alarm Enable	Off or On
Battery Voltage	12 Vdc or 24 Vdc
CANBus Address	0 - 253

Parameter	Setting Range
Communication Parity	None, Odd, or Even
Communication Baud Rate	1200, 2400, or 9600
Continuous Crank Time	1 - 60 sec
Coolant Temperature Sender Fail Alarm Enable	Off or On
Coolant Temperature Sender Fail Alarm Delay	5, 10, 15, 20, 25, or 30 min
Crank Disconnect Limit	10 - 100%
Cranking Style	Continuous or Cycle
Cycle Crank Time	5 - 15 sec
DTC Support	On or Off
ECU Control Output Select	Fuel or Pre-Start Contact
ECU Pulsing	Disable or Enable
ECU Pulse Cycle Time	1 - 60 min
ECU Response Time-out	1 - 60 sec
ECU Settling Time	5,500 - 30,000 msec
ECU Support	On or Off
Engine Shutdown Time	1 - 60 sec
Engine Start/Stop Configuration	Not Configured or Volvo Penta
Engine Maintenance Cycle Pre-Alarm Level	0 - 5,000 hrs
Fuel Level Sender Failure Pre-Alarm Enable	On or Off
Generator Rotation	ABC or ACB
Generator CT Primary Amps	1- 5,000 Aac
Generator Frequency	50 Hz or 60 Hz
Generator kW Rating	5 - 9,999 kW
Generator PT Primary Volts	1 - 999 Vac
Generator PT Secondary Volts	1- 480 Vac
Generator Connection	3-phase L-L 3-phase L-N 1-phase A-B 1-phase A-C
Global Sender Failure Alarm Delay	1 - 30 sec
High Coolant Temperature Alarm Enable	On or Off
High Coolant Temperature Pre-Alarm Enable	On or Off
High Coolant Temperature Pre-Alarm Threshold	100 - 280°F
High Coolant Temperature Alarm Delay	60 sec
High Coolant Temperature Alarm Threshold	100 - 280°F
LCD Contrast	25 -75%

Parameter	Setting Range
Loss of Generator Voltage Alarm Enable	On or Off
Low Battery Voltage Pre-Alarm Enable	On or Off
Low Battery Voltage Pre-Alarm Threshold	6 - 12 Vdc or 12 - 24 Vdc
Low Battery Pre-Alarm Delay	1 - 10 sec
Low Coolant Temperature Pre-Alarm Enable	On or Off
Low Coolant Temperature Pre-Alarm Threshold	50 - 100°F
Low Fuel Level Alarm Enable	On or Off
Low Fuel Level Alarm Threshold	0 - 100%
Low Fuel Level Pre-Alarm Enable	On or Off
Low Fuel Level Pre-Alarm Level	10 - 100%
Low Oil Pressure Arming Delay	5 - 15 sec
Low Oil Pressure Pre-Alarm Enable	On or Off
Low Oil Pressure Pre-Alarm Threshold	3 - 150 psi
Low Oil Pressure Alarm Enable	On or Off
Low Oil Pressure Alarm Threshold	3 - 150 psi
Maintenance Interval Pre-Alarm Threshold	0 - 5,000 hrs
Maintenance Interval Pre-Alarm Enable	On or Off
NFPA Level	0, 1, or 2
No-Load Cool-Down Delay	1 - 60 min
Number of Flywheel Teeth	50 - 500
Number of Crank Cycles	1- 7
Oil Pressure Sender Fail Alarm	Off or On
Overcurrent Pickup	0.18 - 1.18 Aac (style X1XX) 0.9 - 7.75 Aac (style X5XX)
Overcurrent Curve	A, B, C, D, E1, E2, F, G, I1, I2, L1, L2, M, S1, S2, V1, V2
Overcurrent Time Dial	0 - 30 s (F curve) 0 - 9.9 (all other curves)
Overcurrent Alarm Configuration	Pre-Alarm, Alarm, None
Overfrequency Time	0 - 30 s
Overfrequency Pickup	45 - 65 Hz (50/60 Hz sensing) 360 - 440 Hz (400 Hz sensing)
Overfrequency Alarm Configuration	Pre-Alarm, Alarm, None
Overspeed Alarm Threshold	105 - 140%
Overspeed Alarm Delay	0 - 500 msec
Overspeed Alarm Enable	On or Off
Overvoltage Time	0 - 30 s

Parameter	Setting Range
Overvoltage Pickup	70 -576 Vac
Overvoltage Alarm Configuration	Pre-Alarm, Alarm, None
Phase Imbalance Pickup	5 - 100 Vac
Phase Imbalance Time	0 - 30 s
Phase Imbalance Alarm Configuration	Pre-Alarm, Alarm, None
Pre-Alarm Buzzer Enable	Off or On
Pre-Crank Time Delay	0 - 30 sec
Pre-Start Contact after Disconnect	Off or On
Rated Engine rpm	750 - 3,600
Sender Failure Alarm Time Delay	1 - 10 sec
Single-Phase Override Sensing Configuration	A-B or A-C
Speed Signal Source	MPU, Gen Freq, or MPU-Gen
Speed Select	Primary/Secondary
Underfrequency Time	0 - 30 s
Underfrequency Inhibit	70 - 576 Vac
Underfrequency Alarm Configuration	Pre-Alarm, Alarm, None
Underfrequency Pickup	45 - 65 Hz (50/60 Hz sensing) 360 - 440 Hz (400 Hz sensing)
Undervoltage Pickup	70 - 576 Vac
Undervoltage Time	0 - 30 s
Undervoltage Alarm Configuration	Pre-Alarm, Alarm, None
Undervoltage Inhibit	20 - 400 Hz
Unit ID	1 - 247
Unit System	English or Metric
Weak Battery Voltage Pre-Alarm Threshold	4 - 8 Vdc or 8 - 16 Vdc
Weak Battery Voltage Pre-Alarm Delay	1 - 10 sec
Weak Battery Voltage Pre-Alarm Enable	On or Off

APPENDIX C • DGC-500 SETTINGS RECORD

INTRODUCTION

This appendix provides a complete list of DGC-500 settings. This list is provided in the form of a settings record that you can use to record information relative to your application. DGC-500 settings are organized in the following groups.

- Sensing Transformers
- System
- Cranking
- Pre-Alarms
- Alarms
- Generator Protection
- Serial Communication
- J1939 Interface
- Miscellaneous

Katolight Service - Master Repair Manual - Page 1950

DGC-500 SETTINGS RECORD

Genset ID _____ **Date** _____

DGC-500 Serial Number _____ **Firmware Version** _____

Sensing Transformer Settings

Parameter	Setting
Generator CT Primary Amps	
Generator PT Primary Volts	
Generator PT Secondary Volts	

System Settings

Battery Voltage	
Generator Connection	
Generator Frequency	
Generator kW Rating	
Generator Rotation	
NFPA Level	
No-Load Cool-Down Delay	
Number of Flywheel Teeth	
Rated Engine RPM	
Single-Phase Override Sensing Configuration	
Speed Signal Source	
Unit System	

Cranking Settings

Parameter	Setting
Crank Disconnect Limit	
Cranking Style	
Cycle Crank Time	
Pre-Crank Time Delay	
Pre-Start Contact after Disconnect	

Pre-Alarm Settings

Parameter	Setting
Battery Charger Failure Pre-Alarm Enable	
Battery Overvoltage Pre-Alarm Enable	
Battery Overvoltage Pre-Alarm Threshold	
Engine Maintenance Cycle Pre-Alarm Level	
Fuel Level Sender Failure Pre-Alarm Enable	
High Coolant Temperature Pre-Alarm Enable	
High Coolant Temperature Pre-Alarm Threshold	
Low Battery Pre-Alarm Delay	
Low Battery Voltage Pre-Alarm Enable	
Low Battery Voltage Pre-Alarm Threshold	
Low Coolant Temperature Pre-Alarm Enable	
Low Coolant Temperature Pre-Alarm Threshold	
Low Fuel Level Pre-Alarm Enable	
Low Fuel Level Pre-Alarm Level	
Low Oil Pressure Pre-Alarm Enable	
Low Oil Pressure Pre-Alarm Threshold	
Maintenance Interval Pre-Alarm Enable	
Maintenance Interval Pre-Alarm Threshold	
Pre-Alarm Buzzer Enable	
Weak Battery Voltage Pre-Alarm Delay	
Weak Battery Voltage Pre-Alarm Enable	
Weak Battery Voltage Pre-Alarm Threshold	

Alarm Settings

Parameter	Setting
Coolant Temperature Sender Fail Alarm Enable	
Coolant Temperature Sender Fail Alarm Delay	
Global Sender Failure Alarm Delay	
High Coolant Temperature Alarm Enable	
High Coolant Temperature Alarm Threshold	
Loss of Generator Voltage Alarm Enable	

Alarm Settings – Continued

Parameter	Setting
Low Fuel Level Alarm Enable	
Low Fuel Level Alarm Threshold	
Low Oil Pressure Alarm Enable	
Low Oil Pressure Alarm Threshold	
Oil Pressure Sender Fail Alarm	
Overspeed Alarm Delay	
Overspeed Alarm Enable	
Overspeed Alarm Threshold	
Sender Failure Alarm Time Delay	

Generator Protection Settings

Parameter	Setting
Overcurrent Pickup - 3 Phase	
Overcurrent Pickup - Single Phase	
Overcurrent Time Dial - 3 Phase	
Overcurrent Time Dial - Single Phase	
Overcurrent Curve - 3 Phase	
Overcurrent Curve - Single Phase	
Overcurrent Alarm Configuration - 3 Phase	
Overcurrent Alarm Configuration - Single Phase	
Overfrequency Alarm Configuration	
Overfrequency Time	
Overfrequency Inhibit	
Overvoltage Pickup - Single Phase	
Overvoltage Time - Single Phase	
Overvoltage Alarm Configuration - Single Phase	
Overvoltage Alarm Configuration - 3 Phase	
Overvoltage Pickup - 3 Phase	
Overvoltage Time - 3 Phase	
Phase Imbalance Pickup	
Phase Imbalance Alarm Configuration	

Parameter	Setting
Phase Imbalance Time	
Underfrequency Inhibit	
Underfrequency Time	
Underfrequency Pickup	
Underfrequency Alarm Configuration	
Undervoltage Inhibit - 3 Phase	
Undervoltage Pickup - 3 Phase	
Undervoltage Alarm Configuration - Single Phase	
Undervoltage Pickup - Single Phase	
Undervoltage Time - Single Phase	
Undervoltage Time - 3 Phase	
Undervoltage Inhibit - Single Phase	
Undervoltage Alarm Configuration - 3 Phase	

Communication Settings

Parameter	Setting
Baud Rate	
Parity	
Unit ID	

J1939 Interface

Parameter	Setting
ECU Support	
DTC Support	
CANBus Address	
Engine Start/Stop Configuration	
Speed Select	
Accelerator Position	
ECU Control Output Select	
ECU Pulsing	
Engine Shutdown Timer	
Settling Time	

Parameter	Setting
Pulse Cycle Time	
Response Timeout	

Miscellaneous Settings

Parameter	Setting
Accumulated Engine Runtime	
LCD Contrast	
Daylight Saving Time	



KDGC-2000

Digital Genset Controller

Revision II

CONTENTS

SECTION 1 GENERAL INFORMATION 1-1

Description 1-1
Features 1-1
Functions 1-1
Outputs 1-1
Specifications 1-2

SECTION 2 HUMAN-MACHINE INTERFACE (Controls And Indicators) 2-1

General 2-1
Front Panel Display 2-1
KDGC-2000 Connections 2-2

SECTION 3 FUNCTIONAL DESCRIPTION 3-1

General 3-1
Inputs 3-2
- Battery Operating Voltage 3-2
- Contact Sensing Inputs 3-2
- Sending Unit Inputs 3-3
- Speed Signal Inputs 3-3
- Voltage Inputs 3-3
- Current Inputs 3-3
- Serial Communications Input 3-3

Microprocessor 3-3
- Formulas 3-3
- Related circuits 3-4

Outputs 3-4
Software 3-5
- Display Modes 3-5
- Normal Mode 3-5
- Menu Mode 3-5
- Exiting Menu Mode 3-15
- Modifying Setpoints 3-16
- Alternate Display Mode 3-17

Factory Key Code Setting 3-17
Allowable Key Code Pushbuttons 3-18
Parameters And Default Settings 3-18
- Front Panel Adjustable Parameters 3-18
- All Parameters 3-18

SECTION 4 INSTALLATION 4-1

General 4-1
Hardware 4-1
Mounting 4-1
Connections 4-3
Communication Connectors And Settings 4-7
- RS-232 Connector 4-7
- Communication Settings 4-7

CONTENTS - Continued

SECTION 5 TESTING 5-1

Introduction 5-1
Equipment Required 5-1
Initial Test Procedure 5-1
Metering Test Procedure 5-3
- Metering Battery And Generator Voltages 5-3
- Metering Bus Voltages 5-5
- Metering Generator Current 5-5
- Oil Pressure 5-5
- Coolant Temperature 5-5
- Percent Fuel Level 5-5
- Engine Speed (RPM) 5-5
- Generator Power Factor 5-6
- Generator kW And kVA 5-6

Cranking Test Procedures 5-6
- Crank Cycle 5-6
- Running 5-7

Protective Functions 5-7
- Overcrank 5-7
- Overspeed 5-7
- Low Oil Pressure 5-7
- High Coolant Temperature 5-8
- Fuel Leak 5-8
- Emergency Stop 5-8
- Low Coolant Level 5-9

SECTION 6 MODBUS™ COMMUNICATIONS 6-1

General 6-1
- Interface 6-1
- Applications 6-1

Introduction To Modbus™ Protocol 6-1
KDGC-2000 MODBUS™ Protocol 6-1
- Message Structure 6-2
- Device Address Field 6-2
- Function Code Field 6-2
- Data Block Field 6-2
- Error Check Field 6-2

Serial Transmission Details 6-2
Message Framing And Timing Considerations 6-3
Error Handling And Exception Responses 6-3
Communications Hardware Requirements 6-3
Detailed Message Query And Response 6-3
- Read Holding Registers Query 6-3
- Read Holding Registers Response 6-4
- Return Query Data 6-4
- Return Query 6-5
- Return Response 6-5
- Preset Multiple Register Query 6-6
- Preset Multiple Register Response 6-6

Changing The Logon Password 6-7
Data Formats 6-7
- Double Precision Data Format 6-7
- Triple Precision Data Format 6-7
- Error Check 6-8
- Settings Source Register (40081) 6-8
- Saving Settings Register (40082) 6-8

CONTENTS - Continued

SECTION 6 MODBUS™ COMMUNICATIONS - Continued

Mapping Registers Into Modicon Address Space 6-8
Conventions 6-8
Register Table 6-9

SECTION 7 KDGC-2000 WINDOWS® SOFTWARE 7-1

General 7-1
Installation 7-1
Operating Requirements 7-1
Installing the Program on Your PC with Windows® 95 7-1
Installing the Program on Your PC with Windows® 3.1 7-1
Configuring the System 7-1
Initializing Communications with the KDGC 2000 Windows Software 7-1
Changing the Programs Communication Parameters 7-3
Changing Logon Passwords 7-4
Remote Start and Stop of Generator 7-4
Changing Settings 7-5
Menus 7-5
File Menu 7-5
Communications Menu 7-5
Screens Menu 7-6
Configure Menu 7-6
Help Menu 7-6
Settings Definitions 7-6
Sensing Transformers Settings 7-7
Pre-Alarm Settings-Low Fuel-Low Cool-Batt. OverVolt. 7-8
Pre-Alarm Settings-Maint. Inter.-Eng. kW Overload-Hi Cool 7-9
Pre-Alarm Settings-Low Oil-Low Batt. Volt- Weak Batt Volt 7-10
Pre-Alarm Settings-Audible-Battery Charger 7-11
Alarm Settings-Hi Cool Temp-Low Oil Press 7-12
Alarm Settings-Overspeed-Sender Failure 7-13
Crank Settings 7-14
System Settings 7-15
Metering 7-16
Top Portion of the Screen 7-17

APPENDIX A KDGC-2000 SETTINGS RECORD

Introduction A-1
KDGC-2000 Settings Record A-2

Katolight Service - Master Repair Manual - Page 1962

SECTION 1 • GENERAL INFORMATION

DESCRIPTION

KDGC-2000 Digital Genset Controllers use microprocessor based technology to provide integrated engine-generator set control, protection, and metering in a single package. Microprocessor based technology allows for exact measurement, set point adjustment, and timing functions. The KDGC-2000 allows for quick and simple operation from the front panel or through serial link communications. Communications uses the Modbus™ protocol. Because of the low sensing burden in the KDGC-2000, neither dedicated potential transformers nor current transformers are required. A wide temperature range LCD display with backlighting allows the display to be viewed under any ambient light condition. This combination of features in the KDGC-2000 yields significant savings in installation and setup costs.

FEATURES

KDGC-2000 Digital Genset Controllers have the following features.

- Packaged in metal cases for improved electromagnetic compatibility.
- Designed for use in harsh environments.
- Resistant to high moisture, salt fog, humidity, dust, dirt, and chemical contaminants.
- Resistant to the entrance of insects and rodents.
- Suitable for mounting in any top mount enclosure.
- Suitable for controlling isolated generating systems or paralleled generating systems.
- Serial link communications and the optional Katolight software package enhances the users access to set-up parameters. The Katolight software package also provides real time monitoring and control. When combined with a modem and a telephone line, monitoring and control is possible from any remote location.

FUNCTIONS

KDGC 2000 Digital Genset Controllers perform the following functions.

1. Engine cranking control
2. Generator voltage metering
3. Bus voltage metering
4. Generator frequency metering
5. Bus frequency metering
6. Generator current metering
7. Engine coolant temperature metering
8. Engine coolant temperature protection
9. Engine oil pressure metering
10. Engine oil pressure protection
11. Fuel level sensing
12. Fuel level protection
13. Engine cool down
14. Watt metering
15. VA metering
16. Fuel Leak Detection
17. Engine rpm metering
18. Power factor metering
19. Watthour metering
20. Engine run time metering
21. Battery voltage metering
22. Battery condition monitoring
23. Engine maintenance monitoring
24. Overload protection
25. Serial communication with Modbus™ protocol
26. Low coolant level

OUTPUTS

There are thirteen isolated form A output contacts. Four are for engine cranking control and the remaining nine are for the various protection features.

SPECIFICATIONS

KDGC-2000 Digital Genset Controllers have the following features and capabilities.

Current Sensing Inputs

Current range	
1 Ampere Input	0.02 to 1 ampere continuously, 2.0 amperes for one second
5 Ampere Input	0.1 to 5 amperes continuously, 10.0 amperes for one second
Accuracy	±2% of reading or ± 2 amperes whichever is greater
Burden	1 volt-ampere

Voltage Sensing Inputs

Range	12 to 576 volts RMS, 50 or 60 hertz contin-uously, 720 volts RMS for one second
Accuracy	±2% of reading or ± 2 volts whichever is greater
Burden	1 volt-ampere

Frequency

Range	4 to 70 hertz
Accuracy	±0.25% of reading or ±0.2 Hz whichever is greater

Contact Sensing Inputs

Emergency Stop	Normally closed dry contact
Fuel Leak	Normally open dry contact
Automatic Transfer	Normally open dry contact
Battery Charger Fail	Normally open dry contact
Low Coolant Level	Normally open dry contact

Engine System Inputs

Fuel Level Sensing	Recommended fuel level transmitter: ISSPRO, part number R-8925
Range	0 to 250 ohms, 0 to 100%
Accuracy	±2%
Coolant Temperature Sensing	Recommended coolant temperature transmitter: Stewart-Warner, part number 334-P
Range	0 to 1000 ohms
Accuracy	From 37°C (99°F) to 115°C (239°F): ±2% of the reading or ±2 degrees whichever is greater
Oil Pressure Sensing	Unit displays 0 below 104 kilopascals (15 PSI). Recommended oil pressure transmitter: Stewart-Warner (part number 441-K or equivalent)
Range	0 to 250 ohms
Accuracy	From 0 to 690 kilopascals: ±2% of reading or ±2 kilopascals whichever is greater From 0 to 100 PSI: ±2% of reading or ±2 PSI whichever is greater

Battery Voltage Sensing

Range	12 or 24 volts nominal, 8 to 32 volts dc, battery dip ride through to 3 volts for 0.75 seconds
Accuracy	±2% of reading or ±0.2 volts whichever is greater
Burden	16 watts maximum

Magnetic Pickup Sensing

Voltage Range	3 volts peak (during cranking) to 35 volts peak continuous into 10 kohms
Frequency Range	32 to 10,000 hertz

Engine Alternator Voltage Sensing

Voltage Range	2 volts peak to 50 volts peak
Frequency Range	100 to 900 hertz nominal

Engine RPM Sensing

Range	750 to 3600 RPM
Accuracy	±2% of reading or ±2 RPM whichever is greater

Output Contacts

Contact Ratings For Engine Cranking Control	The MASTER START, AUXILIARY START, FUEL SOLENOID, and ENGINE RUN relays are rated for 10 amperes at 24 Vdc, make, break, and carry
Contact Ratings For Protection Features	The PRE-START, ALARM, PRE-ALARM, LOW OIL PRESSURE, LOW COOLANT TEMPERATURE, HIGH COOLANT TEMPERATURE, OVERCRANK, OVERSPEED, and FUEL LEAK relays are rated for 2 amperes at 24 Vdc, make, break, and carry

Calculated Data

Power Factor (PF)

Range	+1.0 to -1.0, both leading and lagging
Accuracy	±0.02 PF

Kilo Volt-Amperes

Range	0 to 9,999 kVA
Accuracy	±2% of reading or ±2 kVA whichever is greater

Kilowatts

Range	0 to 9,999 kW
Accuracy	±3% of reading or ±2 kW whichever is greater

Kilowatt Hours

Range	0 to 999,999,999 kWh
Accuracy	±2% of reading or ±2 kWh whichever is greater

Engine Run Time

Range	0 to 99,999 hours
Accuracy	±1% of reading or ±2 hours whichever is greater

Maintenance Interval

Range	0 to 5,000 hours
Accuracy	±1% of reading or ±2 hours whichever is greater

Hardware

Communication Port	
Interface	
Rear RS-232	9600 baud, 8N1 full duplex
Protocols	
Rear RS-232	Modbus™
Isolation	2000 Vac at 50/60 Hz for one minute between ground and voltage sensing inputs. 500 Vac at 50/60 Hz for one minute between any of the following groups • Voltage Sensing - 70mA • Battery, Contact Sensing, and Remote Panel - 42 mA • Current Transformer - 8mA • Communications Port - RS-232 - 6 mA • Contact Outputs - 23 mA
Impulse	Qualified to IEC 255-5
Surge Withstand Capability	
Oscillatory	Qualified to ANSI/IEEE C37.90.1-1989 *Standard Surge Withstand Capability (SWC) Tests for Protective Relays and Relay Systems.*
Fast Transient	Qualified to ANSI/IEEE C37.90.1-1989 *Standard Surge Withstand Capability (SWC) Tests for Protective Relays and Relay Systems.*
Radio Frequency Interference (RFI)	Type tested using a 5 watt, hand-held trans-ceiver operating at random frequencies centered around 144 and 440 megahertz with the antenna located within 6 inches (15 centimeters) of the device in both vertical and horizontal planes
Environment	
Operating Temperature Range	-40°C to 70°C (-40°F to 158°F)
Storage Temperature Range	-40°C to 85°C (-40°F to 185°F)
Salt Fog	Qualified to ASTM-117B-1989 with the device unpowered for the 100 hour test duration
Vibration	The device withstands 2 g in each of three mutually perpendicular planes, swept over the range of 10 to 500 Hz for a total of six sweeps, 15 minutes each sweep, without structural damage or degradation of performance
Shock	15 g
Weight	Maximum weight 5.75 pounds (2.61 kilograms)

SECTION 2 • HUMAN-MACHINE INTERFACE (Controls And Indicators)

GENERAL

This section provides a description of the KDGC-2000 Digital Genset Controller human machine interface and illustrates the menu tree.

FRONT PANEL DISPLAY

Figure 2-1 shows the front panel human-machine interface (HMI) for a KDGC-2000. Descriptions in Table 2-1 refer to callouts in Figure 2-1.

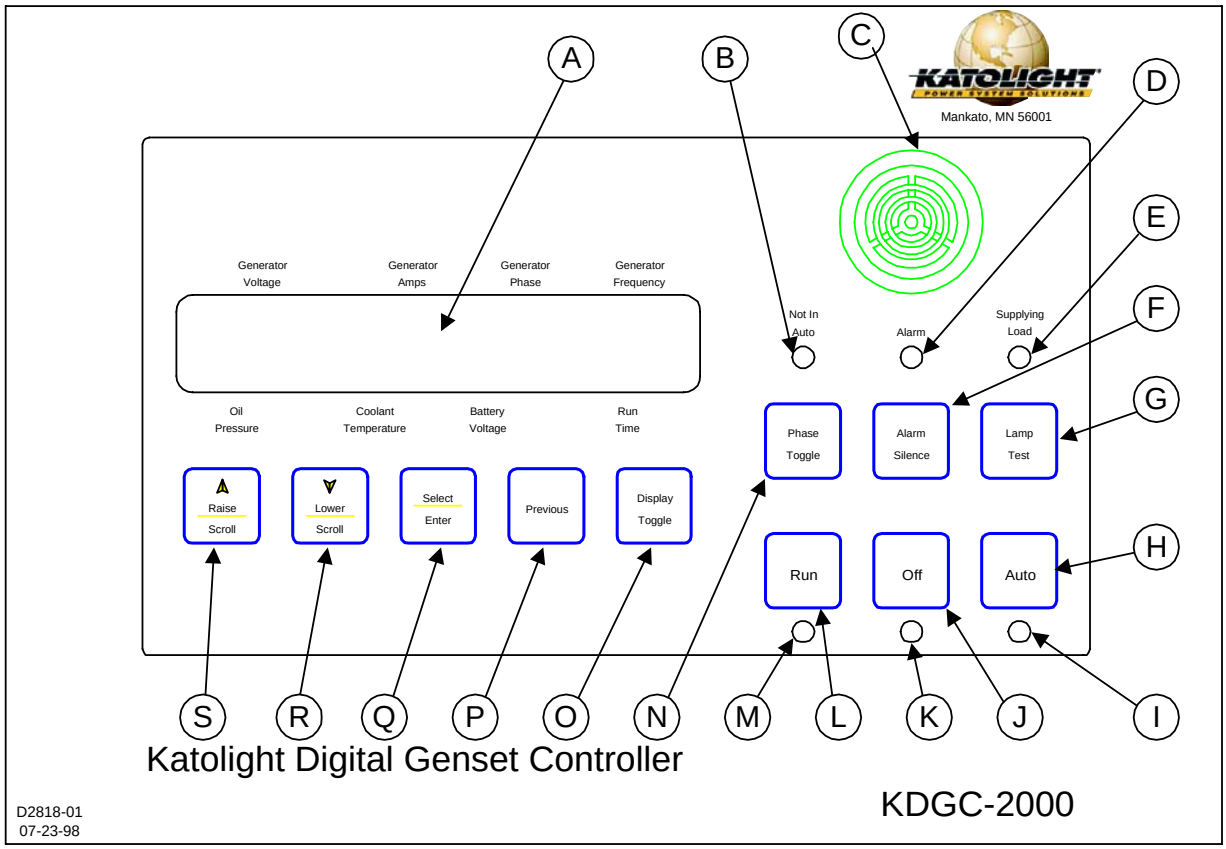

Figure 2-1. KDGC-2000 Front Panel

Table 2-1. KDGC-2000 HMI (Controls And Indicators)

A	Two line by twenty character LCD provides the primary visual interface for metering, alarms, prealarms, and protective functions. In the normal mode, labels appear above and below the display. In the alternate display mode, labels and the displayed value appear on the display.
B	Red LED turns ON when the device is not in the AUTO mode.
C	Audible alarm annunciates when the unit is not in AUTO and when alarms and prealarms occur.

Table 2-1. KDGC-2000 HMI (Continued)

D	Red LED turns ON continuously for all alarm conditions and flashes for prealarm conditions.
E	Green LED turns ON when the generator is supplying more than two percent of rated current.
F	Pushbutton used to silence the audible alarm.
G	Pushbutton used to exercise all segments of the LCD and to illuminate all LED's.
H	Pushbutton used to place the device in AUTO mode.
I	Green LED turns ON when the device is in the AUTO mode.
J	Pushbutton used to place the unit in the OFF mode.
K	Red LED turns ON when the device is in the OFF mode.
L	Pushbutton used to place the device in the RUN mode.
M	Green LED turns ON when the device is in the RUN mode.
N	Pushbutton used to scroll through the displays available in the normal display mode.
O	Pushbutton used to scroll through the display modes.
P	Pushbutton used to scroll through previous menu levels.
Q	Pushbutton used to enter menu sublevels and select set points.
R	Pushbutton used to scroll backward through the menus and to decrement set points.
S	Pushbutton used to scroll forward through the menus and to increment set points.

KDGC-2000 CONNECTIONS

Compression type terminal strips make wiring the KDGC-2000 a simple task. These connections accept one #10 or two #14 AWG wires. These operations are made even easier by user friendly labeling of the terminal strips. Once wired, these terminals can be removed as an assembly and facilitate KDGC-2000 replacement for out of circuit testing or maintenance. Figure 2-2 shows the KDGC-2000 rear panel terminal connections. Descriptions in Table 2-2 refer to callouts in Figure 2-2.

Table 2-2. KDGC-2000 Connections

A	Connection points for the speed sensing inputs.
B	Connection points for voltage sensing inputs.
C	Connection points for current sensing inputs.
D	Connection points for relay output contacts.
E	Connection point for chassis ground.
F	RS-232 serial communication port.
G	Connection points for remote displays in accordance with the National Fire Protection Agency specifications.
H	Connection points for operating power.
I	Connection points for contact sensing inputs.
J	Connection points for sending unit inputs.

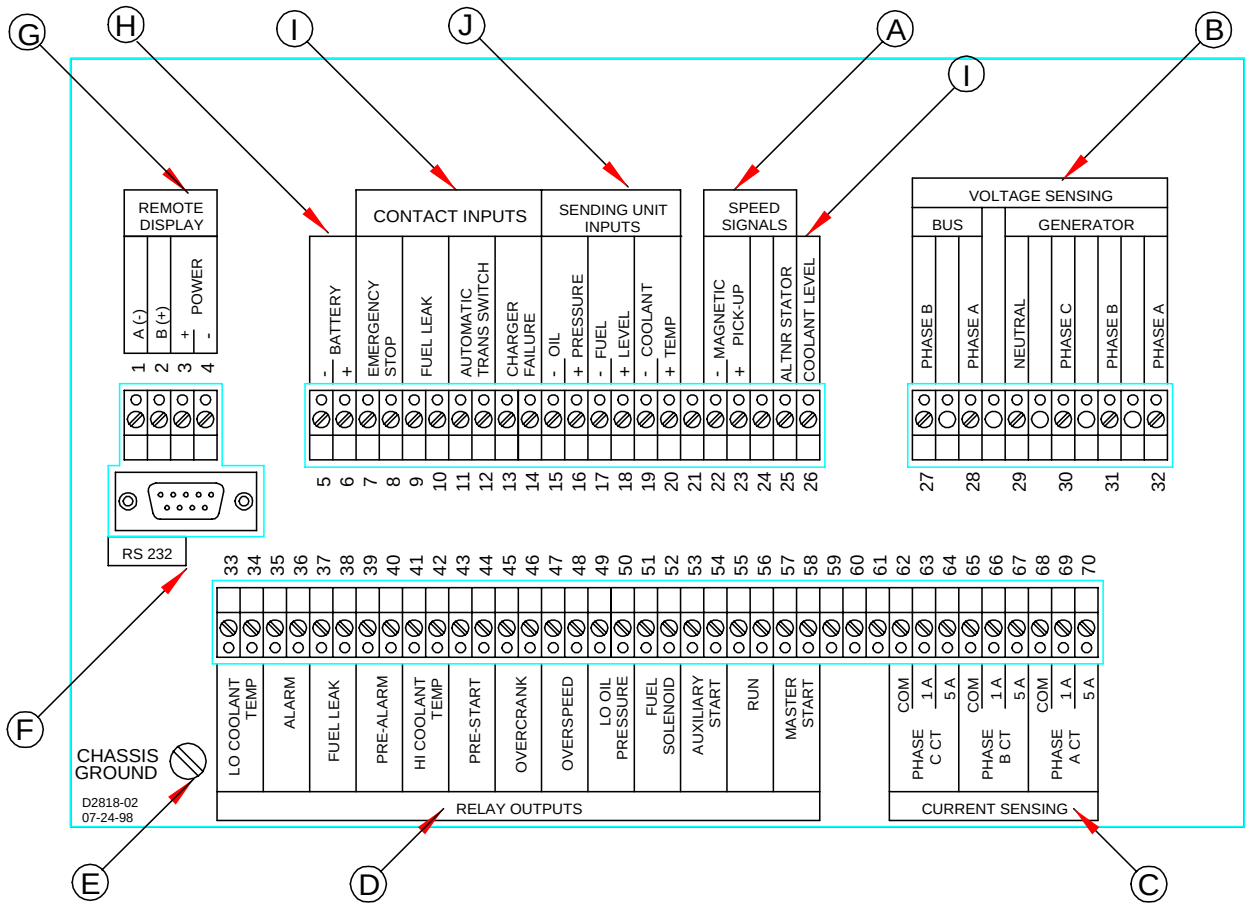

Figure 2-2. KDGC-2000 Digital Genset Controller Rear Panel

Katolight Service - Master Repair Manual - Page 1970

SECTION 3 • FUNCTIONAL DESCRIPTION

GENERAL

KDGC-2000 Digital Genset Controllers use microprocessor based technology to provide integrated engine-generator set control, protection, and metering in a single package. Microprocessor based technology allows for exact measurement, set point adjustment, and timing functions. Refer to the following paragraphs for the KDGC-2000 functional description.

Circuit functional description is divided into *Inputs*, *Microprocessor*, *Outputs*, and *Software*. Circuit functions illustrated in Figure 3-1 are described in the following paragraphs.

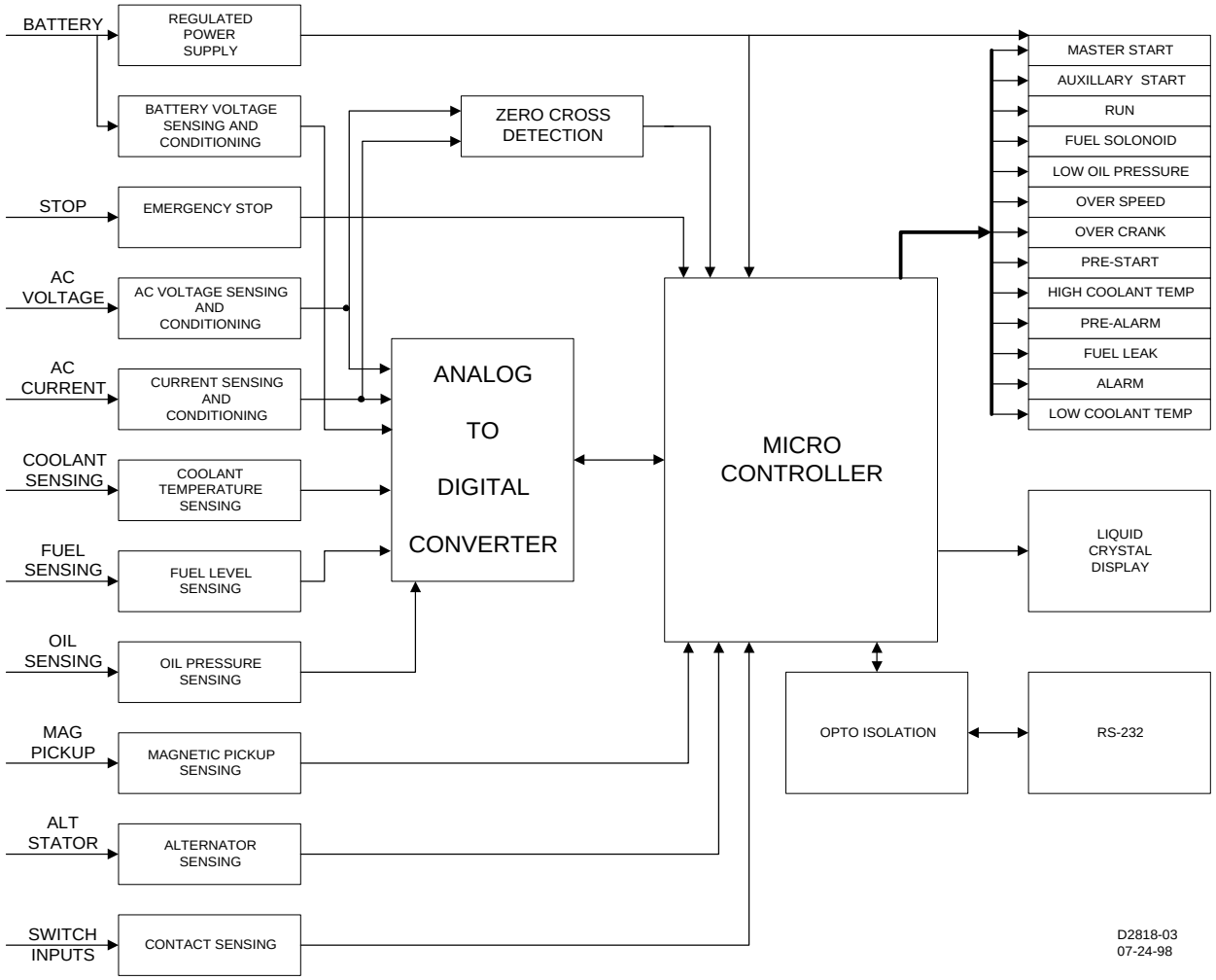

Figure 3-1. KDGC-2000 Functional Block Diagram

INPUTS

There are seven types of inputs to the KDGC-2000 Controller. They are:

- Operating (Battery) DC Power
- Contact Sensing
- Sending Units
- Speed Signals
- Voltage Sensing
- Current Sensing
- Serial Communications RS-232 Port

The following paragraphs describe these inputs.

Battery Operating Voltage

Required operating voltage is a nominal 12 or 24 Vdc. Operating voltage may be in the range of 8 to 32 Vdc. An internal switching power supply uses the battery voltage to generate a +12 Vdc, -12 Vdc, +5 Vdc, a stable +5 Vdc reference, and an isolated +5 Vdc. The isolated +5 Vdc supply is for the RS-232 serial communications port. The dc reference voltage is for internal use.

Battery operating voltage is conditioned (filtered and reduced to a level suitable for microprocessor input) and sensed by the microprocessor.

Contact Sensing Inputs

Five external contact sensing inputs (Emergency Stop, Fuel Leak, Automatic Transfer Switch, Charger Failure, and Low Coolant Level) provide external stimulus to the KDGC-2000 Controller. Nominal voltage(s) of the external dc source(s) must fall within the DC power supply input voltage range.

Emergency Stop

This input is continuously monitored. An open circuit indicates an Emergency Stop. Opening this circuit removes power from all output relays.

Fuel Leak

This input is continuously monitored by the microprocessor and is used to indicate the position of the fuel leak sensor. An open circuit indicates no fuel leak.

Automatic Transfer Switch

This input is continuously monitored by the microprocessor and is used to start the engine when in the auto mode. A closed contact initiates the start sequence.

Charger Failure

This input is continuously monitored by the microprocessor and is used to indicate that ac power is available to the battery charger. An open circuit indicates a failure of the battery charger.

Low Coolant Level

This input is continuously monitored by the microprocessor. When battery (-) potential is connected to this input, a low coolant level is indicated.

Sending Unit Inputs

Coolant temperature

A current of less than two milliamperes is provided to the coolant temperature sending unit. The developed voltage is measured and scaled for use by the internal circuitry.

Oil Pressure

A current of less than 15 milliamperes is provided to the oil pressure sending unit. The developed voltage is measured and scaled for use by the internal circuitry.

Fuel level

A current of less than 15 milliamperes is provided to the fuel level sending unit. The developed voltage is measured and scaled for use by the internal circuitry.

Speed Signal Inputs

Magnetic Pickup

The voltage from the magnetic pickup is scaled and conditioned for use by the internal circuitry as a speed signal source.

Alternator Sensing

The voltage from the engine alternator stator is scaled and conditioned for use by the internal circuitry as a speed signal source.

Voltage Inputs

Monitored generator and bus voltages are sensed and scaled to levels suitable for use by the internal circuitry. Differential amplifiers provide isolation for these inputs. Internal solid state switches select line-to-line, line-to-neutral or single-phase values. Menu selections by the user determine these switch settings.

Current Inputs

Monitored generator currents are sensed and scaled to values suitable for use by the internal circuitry. Internal current transformers provide isolation. Two taps on the primary of these transformers accommodate either one or five ampere circuits.

Serial Communications Input

This serial communications link connects via optically isolated circuitry to the microprocessor. Enhanced access to device functions and real time, remote metering capabilities are available through this port. The KDGC 2000 emulates a subset of the Modicon 984 programmable controller. Katolight custom software provides easy access to these functions.

MICROPROCESSOR

Software programmed in the erasable programmable read-only memory (EPROM) controls the overall functionality of the device and makes all decisions based on programming and system inputs. Formulas that are used to determine the various calculated quantities and circuits related to microprocessor inputs are described in the follow paragraphs.

Formulas

Formulas used in calculating the various quantities are provided in the following paragraphs.

For line-to-neutral (V_{L-N}) voltage sensing: $V_{ab} = \sqrt{V_a^2 + V_a V_b + V_b^2}$

$$V_{bc} = \sqrt{V_b^2 + V_b V_c + V_c^2}$$

$$V_{ca} = \sqrt{V_c^2 + V_c V_a + V_a^2}$$

For all three-phase voltage sensing configurations:

kVA:
kVA A Phase = ($V_{ab} \times I_a$) divided by (1000 times square-root of three)
kVA B Phase = ($V_{bc} \times I_b$) divided by (1000 times square-root of three)
kVA C Phase = ($V_{ca} \times I_c$) divided by (1000 times square-root of three)
Total kVA = kVA A Phase + kVA B Phase + kVA C Phase

kW:
kW A Phase = kVA A Phase times Power Factor
kW B Phase = kVA B Phase times Power Factor
kW C Phase = kVA C Phase times Power Factor
Total kW = Total kVA × PF

Power Factor (PF) = Cosine of the measured angle between voltage and current zero crossings

Related Circuits

Zero Crossing Detection

The zero crossing of the A phase voltage and the B phase current is detected and used to calculate the phase angle between the current and voltage. This zero crossing is also used to measure the bus and generator frequencies.

Signal Switching

Solid state switches, under microprocessor control, select the voltage or current sensing signal that is applied to the RMS to dc converter. The resulting signal is sent to the twelve bit analog-to-digital converter where it is digitized for use by the microprocessor.

RMS To DC Converter

Scaled and conditioned signals representing the voltage and current sensing inputs are used as the input to the RMS to dc converter. This converter output is a dc level proportional to the RMS value of the input.

Analog To Digital Converter

Signals from the RMS to dc converter, coolant temperature sensing input, fuel level sensing input, and the oil pressure sensing input are digitized by the twelve-bit analog to digital converter. The digitized information is stored in random access memory (RAM). This information is used by the microprocessor for all metering and protection functions.

OUTPUTS

Each output relay is controlled by the microprocessor and the emergency stop contact input. When the emergency stop contact input is open, all output contacts open. When the emergency stop contact input is closed and a signal is given by the microprocessor, the output contacts close. All outputs are electrically isolated from each other and from the internal circuitry. Four outputs (master start, auxiliary start, run, and fuel solenoid) are associated with engine cranking functions. The remaining nine outputs (Figure 3-1) are associated with the various alarms, prealarms, and prestart.

SOFTWARE

Software embedded in the KDGC-2000 controls all aspects of device functionality. This comprises power up initialization, front panel set up and configuration, input contact status monitoring, protective function detection and annunciation, system parameter monitoring, output contact status control, and RS-232 serial communications.

When battery power is first applied, the KDGC 2000 initiates a power up sequence. The version of embedded software is displayed on the LCD and the memory is checked. Then all configuration data stored in non-volatile

EEPROM is brought into main memory. Immediately after this, the LCD display begins the Normal mode. When the Normal mode is displayed, all enabled functions are activated and input monitoring begins.

NOTE

The run time counter, kilowatt-hour meter and maintenance timers are updated in volatile memory every minute. The updated value is saved to non-volatile memory only when auto/off/run mode of operation is changed. This can be changed either from the front panel or through the communications port. Should the battery power source fail during operation these values will not be updated and the change in value incurred since the last change of mode will not be saved. This information is irretrievably lost.

Display Modes

Pressing the **Display Toggle** pushbutton when in the Normal display mode allows the user to scroll through the Normal, Alternate, and Menu display modes. Figure 3-2 shows the top level display modes.

Normal Mode

This displays the various engine and generator parameters as described by the front panel overlay. Pressing the **Phase Toggle** pushbutton after the engine is running scrolls through the voltage and current measurements that are available.

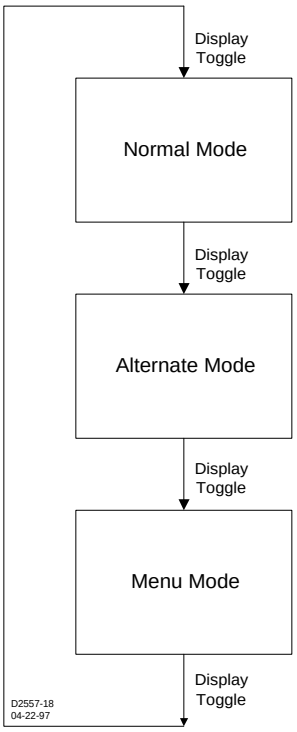

Figure 3-2. Top Level Display Modes

Menu Mode

After pressing the **Display Toggle** pushbutton twice to begin the Menu display mode (first time selects the Alternate mode), pressing **Select/Enter** begins the next level of menus. Pressing the **Raise/Scroll** or **Lower/Scroll** pushbutton (Figure 3-3) allows the user to scroll through the menu display mode screens. Pressing the **Display Toggle** pushbutton returns the display to the Normal mode.

Menu 1. Menu 1 is the alarm and prealarm menu. Pressing **Select/Enter** (Figure 3-4) from this menu begins the 1.x menu level. Pressing **Raise/Scroll** and **Lower/Scroll** from this menu scrolls through the 1.x menu level.

Menu 1.1. Menu 1.1 displays the overspeed alarm. Pressing **Select/Enter** begins the 1.1.1 level of menus and displays the function activation level. Pressing **Select/Enter** displays the setting. This is not adjustable from the front panel. Pressing previous goes back to the 1.1.1 level.

Pressing **Raise/Scroll** or **Lower/Scroll** begins the 1.1.2 function activation delay level of menus. Pressing **Select/Enter** displays the activation delay time once the level has been exceeded. This is not adjustable from the front panel.

Pressing **Previous** twice goes back to the 1.1 level. Pressing **Raise/Scroll** goes to the 1.2 menu level Pressing **Lower/Scroll** goes to the 1.13 menu level.

Menu 1.2. Menu 1.2 displays high coolant temperature alarm. Pressing **Select/Enter** begins the 1.2.1 level of menus and displays the function activation level. Pressing **Select/Enter** displays the setting. This is not adjustable from the front panel.

Pressing **Previous** goes back to the 1.2.1 level. Pressing **Raise/Scroll** or **Lower/Scroll** begins the 1.2.2 function activation delay level of menus. Pressing **Select/Enter** displays the activation delay time once the engine crank disconnect speed is exceeded. This is not adjustable from the front panel.

Pressing **Previous** twice goes back to the 1.2 level. Pressing **Raise/Scroll** goes to the 1.3 menu level Pressing **Lower/Scroll** goes to the 1.1 menu level.

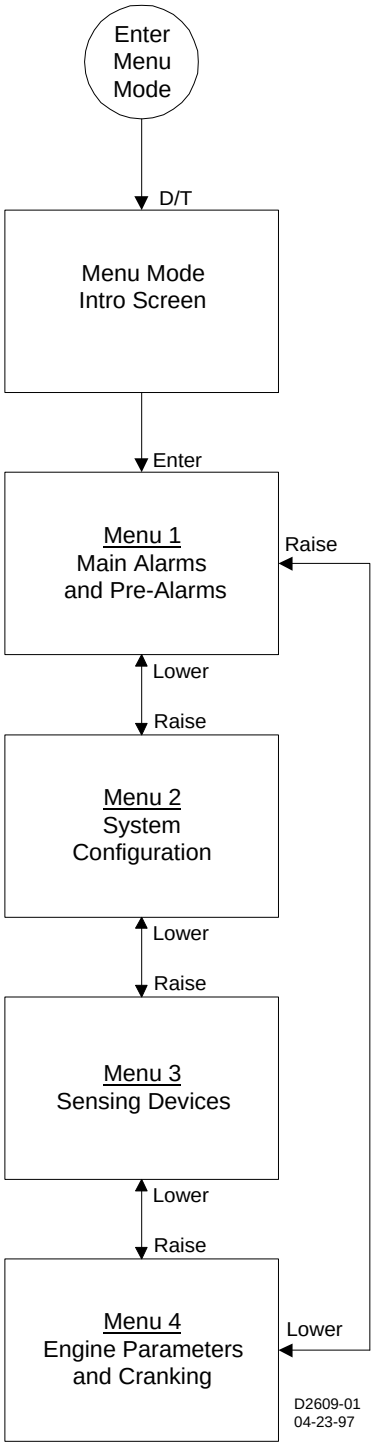

Figure 3-3. Menu Display Modes

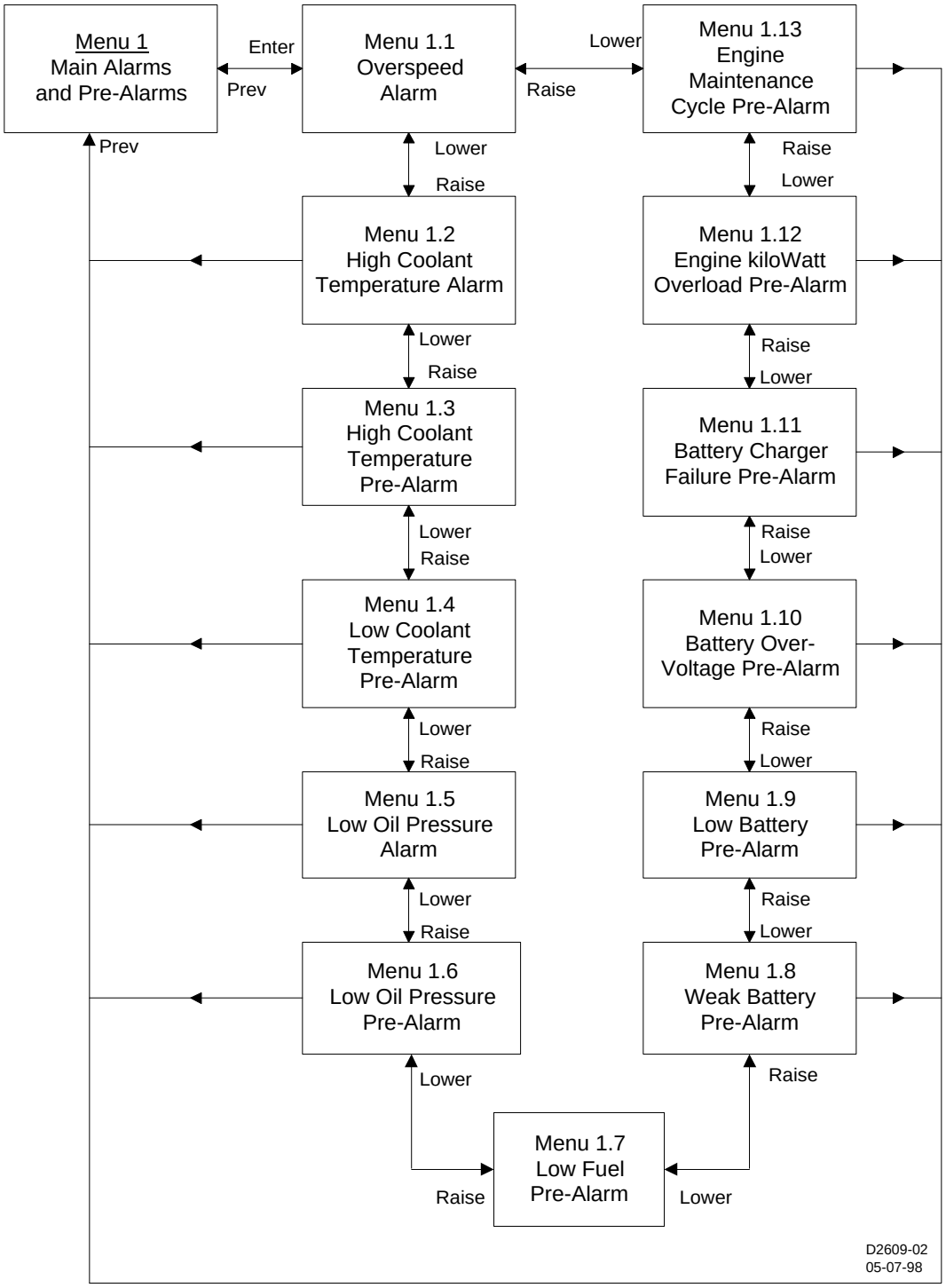

Figure 3-4. Menu 1

Menu 1.3. Menu 1.3 displays high coolant temperature prealarm. Pressing **Select/Enter** begins the 1.3.1 level of menus and displays the function activation level. Pressing **Select/Enter** displays the setting. This is not adjustable from the front panel.

Pressing **Previous** goes back to the 1.3.1 level. Pressing **Raise/Scroll** or **Lower/Scroll** begins the 1.3.2 function activation delay level of menus. Pressing **Select/Enter** displays the activation delay time once the engine crank disconnect speed is exceeded. This is not adjustable from the front panel.

Pressing **Previous** twice goes back to the 1.3 level. Pressing **Raise/Scroll** goes to the 1.4 menu level Pressing **Lower/Scroll** goes to the 1.2 menu level.

Menu 1.4. Menu 1.4 displays low coolant temperature prealarm. Pressing **Select/Enter** begins the 1.4.1 level of menus and displays the function activation level. Pressing **Select/Enter** displays the setting. This is not adjustable from the front panel.

Pressing **Previous** goes back to the 1.4.1 level. Pressing **Raise/Scroll** or **Lower/Scroll** begins the 1.4.2 function activation delay level of menus. Pressing **Select/Enter** displays the activation delay time once the level has been exceeded. This is not adjustable from the front panel.

Pressing **Previous** twice goes back to the 1.4 level. Pressing **Raise/Scroll** goes to the 1.5 menu level Pressing **Lower/Scroll** goes to the 1.3 menu level.

Menu 1.5. Menu 1.5 displays low oil pressure alarm. Pressing **Select/Enter** begins the 1.5.1 level of menus and displays the function activation level. Pressing **Select/Enter** displays the setting. This is not adjustable from the front panel.

Pressing **Previous** goes back to the 1.5.1 level. Pressing **Raise/Scroll** or **Lower/Scroll** begins the 1.5.2 function activation delay level of menus. Pressing **Select/Enter** displays the activation delay time once the engine crank disconnect speed is exceeded. This is not adjustable from the front panel.

Pressing **Previous** twice goes back to the 1.5 level. Pressing **Raise/Scroll** goes to the 1.6 menu level Pressing **Lower/Scroll** goes to the 1.4 menu level.

Menu 1.6. Menu 1.6 displays low oil pressure prealarm. Pressing **Select/Enter** begins the 1.6.1 level of menus and displays the function activation level. Pressing **Select/Enter** displays the setting. This is not adjustable from the front panel.

Pressing **Previous** goes back to the 1.6.1 level. Pressing **Raise/Scroll** or **Lower/Scroll** begins the 1.6.2 function activation delay level of menus. Pressing **Select/Enter** displays the activation delay time once the engine crank disconnect speed is exceeded. This is not adjustable from the front panel.

Pressing **Previous** twice goes back to the 1.6 level. Pressing **Raise/Scroll** goes to the 1.7 menu level Pressing **Lower/Scroll** goes to the 1.5 menu level.

Menu 1.7. Menu 1.7 displays low fuel level prealarm. Pressing **Select/Enter** begins the 1.7.1 level of menus and displays the function activation level. Pressing **Select/Enter** displays the setting. This is adjustable from the front panel.

Pressing **Previous** goes back to the 1.7.1 level. Pressing **Raise/Scroll** or **Lower/Scroll** begins the 1.7.2 function activation delay level of menus. Pressing **Select/Enter** displays the activation delay time once the level has been exceeded. After pressing **Raise/Scroll** or **Lower/Scroll**, the user will be instructed to enter the user key code. After entering the user key code followed by pressing **Select/Enter** twice, the setting will be adjustable with the **Raise/Scroll** and **Lower/Scroll** keys. After the desired setting has been selected, press **Select/Enter** to save the new settings.

Pressing **Previous** twice goes back to the 1.7 level. Pressing **Raise/Scroll** goes to the 1.8 menu level Pressing **Lower/Scroll** goes to the 1.6 menu level.

Menu 1.8. Menu 1.8 displays weak battery prealarm. Pressing **Select/Enter** begins the 1.8.1 level of menus and displays the function activation level. Pressing **Select/Enter** displays the setting. This is not adjustable from the front panel.

Pressing **Previous** goes back to the 1.8.1 level. Pressing **Raise/Scroll** or **Lower/Scroll** begins the 1.8.2 function activation delay level of menus. Pressing **Select/Enter** displays the activation delay time once the level has been exceeded. This is not adjustable from the front panel.

Pressing **Previous** twice goes back to the 1.8 level. Pressing **Raise/Scroll** goes to the 1.9 menu level Pressing **Lower/Scroll** goes to the 1.7 menu level.

Menu 1.9. Menu 1.9 displays low battery prealarm. Pressing **Select/Enter** begins the 1.9.1 level of menus and displays the function activation level. Pressing **Select/Enter** displays the setting. This is not adjustable from the front panel.

Pressing **Previous** goes back to the 1.9.1 level. Pressing **Raise/Scroll** or **Lower/Scroll** begins the 1.9.2 function activation delay level of menus. Pressing **Select/Enter** displays the activation delay time once the level has been exceeded. This is not adjustable from the front panel.

Pressing **Previous** twice goes back to the 1.9 level. Pressing **Raise/Scroll** goes to the 1.10 menu level Pressing **Lower/Scroll** goes to the 1.8 menu level.

Menu 1.10. Menu 1.10 displays battery over voltage prealarm. Pressing **Select/Enter** begins the 1.10.1 level of menus and displays the function activation level. Pressing **Select/Enter** displays the setting. This is not adjustable from the front panel.

Pressing **Previous** goes back to the 1.10.1 level. Pressing **Raise/Scroll** or **Lower/Scroll** begins the 1.10.2 function activation delay level of menus. Pressing **Select/Enter** displays the activation delay time once the level has been exceeded. This is not adjustable from the front panel.

Pressing **Previous** twice goes back to the 1.10 level. Pressing **Raise/Scroll** goes to the 1.11 menu level Pressing **Lower/Scroll** goes to the 1.9 menu level.

Menu 1.11. Menu 1.11 displays battery charger failure prealarm. Pressing **Select/Enter** begins the 1.11.1 level of menus and displays the function activation level. Pressing **Select/Enter** displays the setting. This is not adjustable from the front panel.

Pressing **Previous** goes back to the 1.11.1 level. Pressing **Raise/Scroll** or **Lower/Scroll** begins the 1.11.2 function activation delay level of menus. Pressing **Select/Enter** displays the activation delay time once the level has been exceeded. This is not adjustable from the front panel.

Pressing **Previous** twice goes back to the 1.11 level. Pressing **Raise/Scroll** goes to the 1.12 menu level Pressing **Lower/Scroll** goes to the 1.10 menu level.

Menu 1.12. Menu 1.12 displays kilowatt overload prealarm. Pressing **Select/Enter** begins the 1.12.1 level of menus and displays the function activation level. Pressing **Select/Enter** displays the setting. This is not adjustable from the front panel.

Pressing **Previous** goes back to the 1.12.1 level. Pressing **Raise/Scroll** or **Lower/Scroll** begins the 1.12.2 function activation delay level of menus. Pressing **Select/Enter** displays the activation delay time once the level has been exceeded. This is not adjustable from the front panel.

Pressing **Previous** twice goes back to the 1.12 level. Pressing **Raise/Scroll** goes to the 1.13 menu level Pressing **Lower/Scroll** goes to the 1.11 menu level.

Menu 1.13. Menu 1.13 display engine maintenance prealarm. Pressing **Select/Enter** begins the 1.13.1 level of menus and displays the function activation level. Pressing **Select/Enter** displays the setting. This is not adjustable from the front panel.

Pressing **Previous** goes back to the 1.13.1 level. Pressing **Raise/Scroll** or **Lower/Scroll** begins the 1.13.2 function activation delay level of menus. Pressing **Select/Enter** displays the activation delay time once the level has been exceeded. This is not adjustable from the front panel.

Pressing **Previous** twice goes back to the 1.13 level. Pressing **Raise/Scroll** goes to the 1.1 menu level. Pressing **Lower/Scroll** goes to the 1.12 menu level.

Pressing **Previous** from any 1.x level menu goes to menu 1. Pressing **Raise/Scroll** goes to menu 2. Pressing **Lower/Scroll** goes to menu 4.

Menu 2. Menu 2 system configuration. Pressing **Select/Enter** from this menu (Figure 3-5) begins the 2.x level of menus. Pressing **Raise/Scroll** and **Lower/Scroll** from this menu scrolls through the 1.x levels of menus.

Menu 2.1. Menu 2.1 displays generator voltage sensing connection. Pressing **Select/Enter** begins the 2.1.1 level and displays the sensing configuration. This is not adjustable from the front panel.

Pressing **Previous** goes back to the 2.1 level. Pressing **Raise/Scroll** goes to menu 2.3. Pressing **Lower/Scroll** goes to the 2.1 menu.

Menu 2.2. Menu 2.2 displays options. Pressing **Select/Enter** (Figure 3-6) begins the 2.2.1 level and displays the speed signal source selection. This is not adjustable from the front panel.

Pressing **Previous** goes back to the 2.2.1 level. Pressing **Raise/Scroll** or **Lower/Scroll** goes to menu 2.2.2 and displays metric conversion.

Pressing **Select/Enter** displays the status of this feature. To change to the metric display press **Raise/Scroll** and enter the user keycode followed by the **Select/Enter** key. Press **Raise/Scroll** and then **Select/Enter**. The display will indicate that the new setting has been saved. Press previous twice to go to menu 2.2. Press **Raise/Scroll** to go to menu 2.3. Press **Lower/Scroll** to go to menu 2.1.

Menu 2.3. Menu 2.3 changes user key code. Press **Select/Enter** and then the user keycode followed by **Select/Enter** twice. Press the key sequence for the new key code followed by **Select/Enter** twice. The user will be asked to re-enter the new key code. After entering the new key code followed by **Select/Enter** twice, the display will indicate the new code has been saved.

Pressing **Raise/Scroll** will go to menu 2.4. Pressing **Lower/Scroll** will go menu 2.2.

Menu 2.4. Menu 2.4 prealarm audible alarm enable. Pressing **Select/Enter** will display the status of the prealarm audible alarm. This feature is not adjustable from the front panel. Pressing **Previous** will go to menu 2.4.

Pressing **Raise/Scroll** will go to menu 2.1. Pressing **Lower/Scroll** will go to menu 2.3.

Pressing **Previous** from any 2.x menu will go to menu 2. Pressing **Raise/Scroll** goes to menu 3. Pressing **Lower/Scroll** goes to menu 1.

Menu 3. Menu 3 sensing devices. Pressing **Select/Enter** (Figure 3-7) begins the 3.1 level of menus

Menu 3.1. Menu 3.1 transformer ratios menu. Menu 3.1.1 (Figure 3-8) displays generator potential transformer primary voltage rating. Pressing **Select/Enter** displays the value. This is not adjustable from the front panel. Pressing **Previous** twice goes to menu 3.1. Pressing **Raise/Scroll** goes to menu 3.1.2. Pressing **Lower/Scroll** goes to menu 3.1.5.

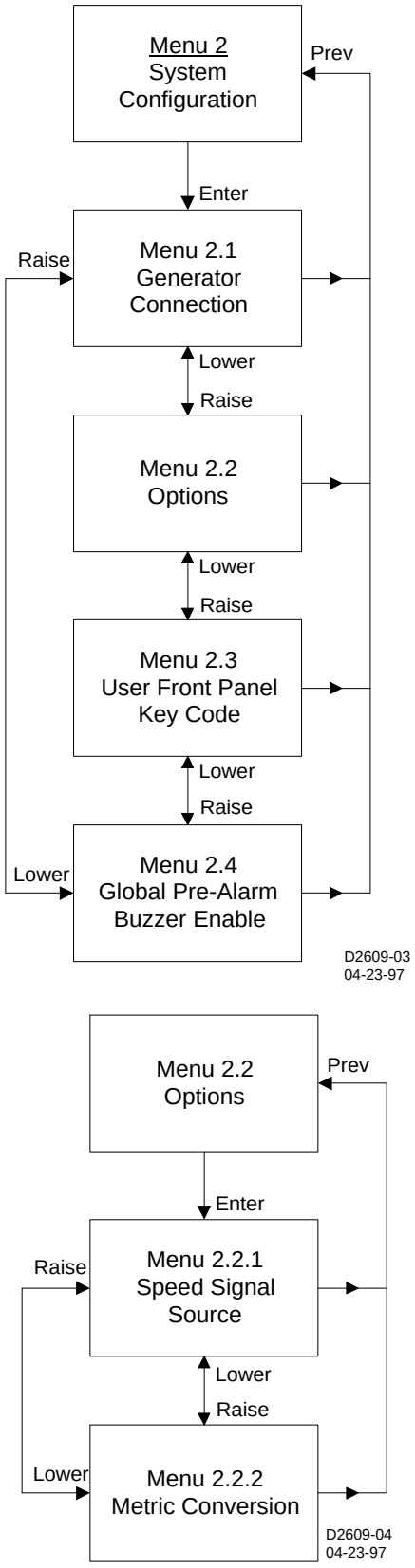

Figure 3-6. Menu 2.2

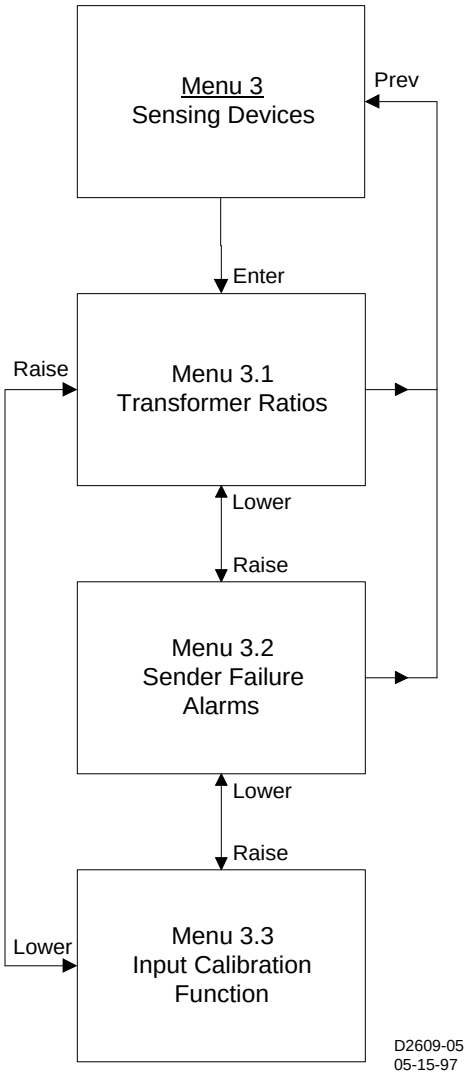

Figure 3-7. Menu 3

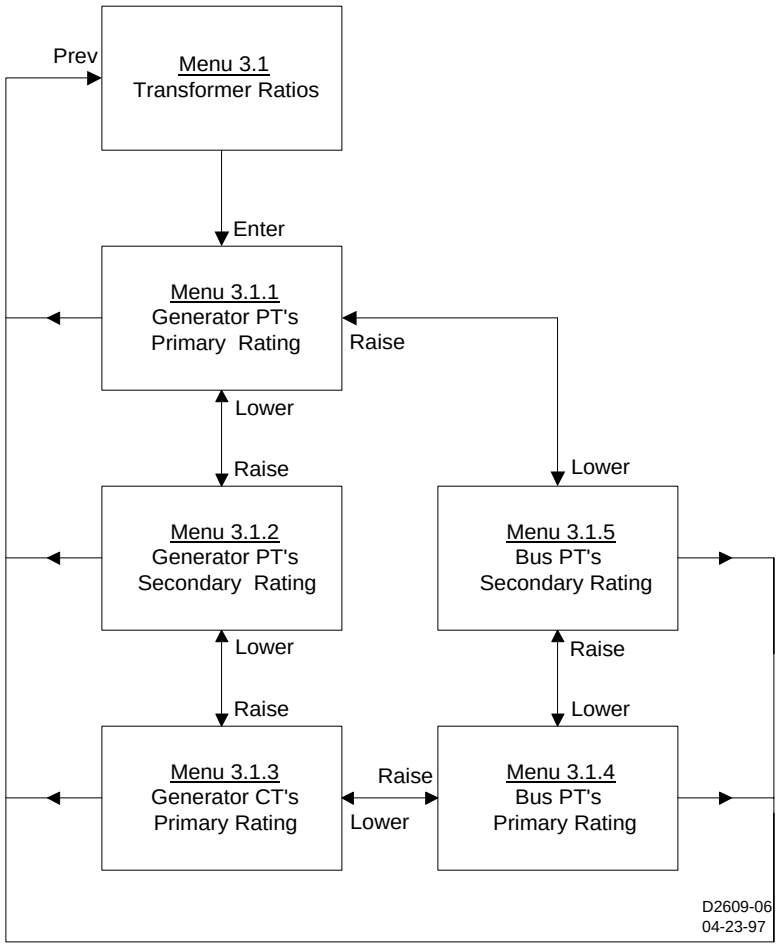

Figure 3-8. Menu 3.1

Menu 3.1.2. Menu 3.1.2 displays the generator potential transformer secondary voltage rating. Pressing **Select/Enter** displays the value. This is not adjustable from the front panel. Pressing previous goes to menu 3.1. Pressing **Raise/Scroll** goes to menu 3.1.3 Pressing **Lower/Scroll** goes to menu 3.1.1.

Menu 3.1.3. Menu 3.1.3 displays the generator current transformer primary current rating. Pressing **Select/Enter** displays the value. This is not adjustable from the front panel. Pressing previous goes to menu 3.1. Pressing **Raise/Scroll** goes to menu 3.1.4. Pressing **Lower/Scroll** goes to menu 3.1.2.

Menu 3.1.4. Menu 3.1.4 displays the bus potential transformer primary voltage rating. Pressing **Select/Enter** displays the value. This is not adjustable from the front panel. Pressing previous goes to menu 3.1. Pressing **Raise/Scroll** goes to menu 3.1.5. Pressing **Lower/Scroll** goes to menu 3.1.3.

Menu 3.1.5. Menu 3.1.5 displays the bus potential transformer secondary voltage rating. Pressing **Select/Enter** displays the value. This is not adjustable from the front panel. Pressing previous goes to menu 3.1. Pressing **Raise/Scroll** goes to menu 3.1.1. Pressing **Lower/Scroll** goes to menu 3.1.4.

Pressing **Raise/Scroll** from menu 3.1 goes to menu 3.2.

Katolight Service - Master Repair Manual - Page 1982

Menu 3.2. Menu 3.2 sender failure alarm menu. Pressing **Select/Enter** (Figure 3-9) begins menu 3.2.1

Menu 3.2.1. Menu 3.2.1 displays coolant temperature sensor failure alarm. Pressing **Select/Enter** displays the status of this alarm. This is not adjustable from the front panel. Pressing **Previous** goes to menu 3.2.1.

Pressing **Raise/Scroll** goes to menu 3.2.2. Pressing **Lower/Scroll** goes to menu 3.2.5.

Menu 3.2.2. Menu 3.2.2 displays oil pressure sensor failure alarm. Pressing **Select/Enter** displays the status of this alarm. This is not adjustable from the front panel. Pressing **Previous** goes to menu 3.2.2.

Pressing **Raise/Scroll** goes to menu 3.2.3. Pressing **Lower/Scroll** goes to menu 3.2.1

Menu 3.2.3. Menu 3.2.3 displays speed signal failure alarm. Pressing **Select/Enter** displays the status of this alarm. This is not adjustable from the front panel. Pressing **Previous** goes to menu 3.2.3.

Pressing **Raise/Scroll** goes to menu 3.2.4. Pressing **Lower/Scroll** goes to menu 3.2.2.

Menu 3.2.4. Menu 3.2.4 displays voltage sensing failure alarm. Pressing **Select/Enter** displays the status of this alarm. This is not adjustable from the front panel. Pressing **Previous** goes to menu 3.2.4.

Pressing **Raise/Scroll** goes to menu 3.2.5. Pressing **Lower/Scroll** goes to menu 3.2.3.

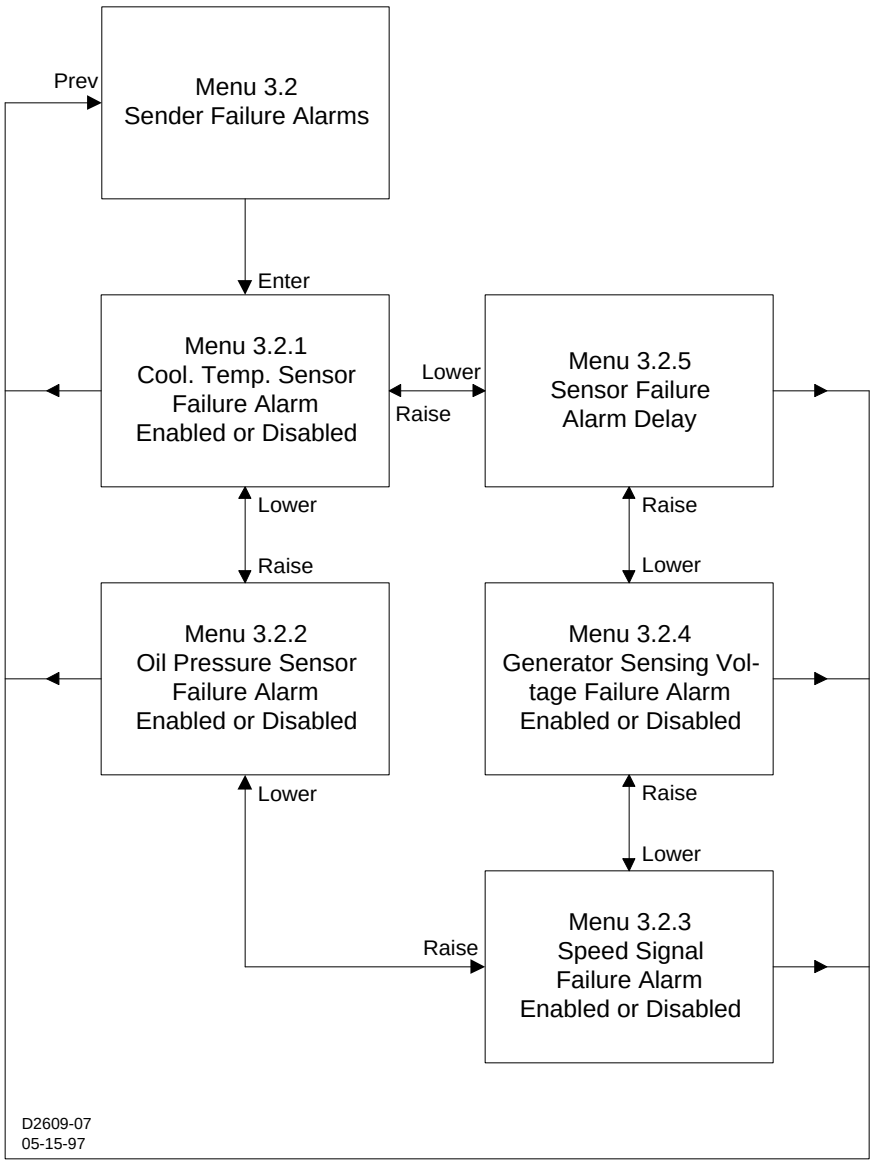

Figure 3-9. Menu 3.2

Menu 3.2.5. Menu 3.2.5 displays sensor failure alarm time delay. Pressing **Select/Enter** displays the delay time. After pressing **Raise/Scroll** or **Lower/Scroll** the user will be instructed to enter the user key code. After entering the user key code followed by pressing **Select/Enter** twice, the setting will be adjustable with the **Raise/Scroll** and **Lower/Scroll** keys. After the desired setting has been selected, press **Select/Enter** to save the new setting. Pressing **Previous** goes to menu 3.2. Pressing **Raise/Scroll** goes to menu 3.2.1. Pressing **Lower/Scroll** goes to menu 3.2.4.

Pressing **Raise/Scroll** from menu 3.2 goes to menu 3.3. Pressing **Lower/Scroll** from menu 3.2 goes to menu 3.1.

Katolight Service - Master Repair Manual - Page 1983

Menu 3.3. Menu 3.3 displays the input calibration function. This function is for factory use only.

Pressing **Previous** goes to menu 3. Pressing **Raise/Scroll** from menu 3 goes to menu 4. Pressing **Lower/Scroll** goes to menu 2.

Menu 4. Menu 4 (Figure 3-10) displays engine parameters and cranking. Pressing **Select/Enter** from menu 4 begins menu 4.1.

Menu 4.1. Menu 4.1 displays cool down time. After pressing **Raise/Scroll** or **Lower/Scroll**, the user will be instructed to enter the user key code. After entering the user key code followed by pressing **Select/Enter** twice, the setting will be adjustable with the **Raise/Scroll** and **Lower/Scroll** keys. After the desired setting has been selected, press **Select/Enter** to save the new setting. Pressing **Previous** goes to menu 4.1. Pressing **Raise/Scroll** goes to menu 4.2. Pressing **Lower/Scroll** goes to menu 4.7.

Menu 4.2. Menu 4.2 displays cranking mode. Pressing **Select/Enter** displays the cranking mode selected. This is not adjustable from the front panel. Pressing **Previous** goes to menu 4.2. Pressing **Raise/Scroll** goes to menu 4.3. Pressing **Lower/Scroll** goes to menu 4.1.

Menu 4.3. Menu 4.3 displays the number of crank cycles. Pressing **Select/Enter** displays the number of crank cycles selected. This is not adjustable from the front panel. Pressing **Previous** goes to menu 4.3. Pressing **Raise/Scroll** goes to menu 4.4. Pressing **Lower/Scroll** goes to menu 4.2.

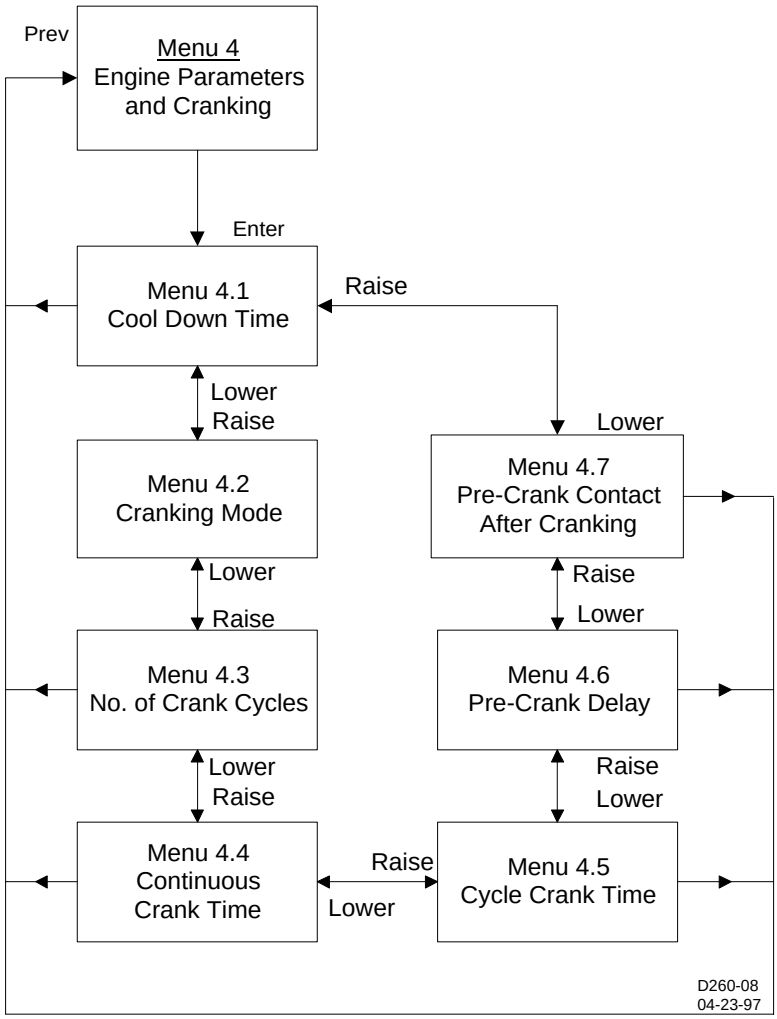

Figure 3-10. Menu 4

Menu 4.4. Menu 4.4 displays continuous crank time. Pressing **Select/Enter** displays the continuous crank time selected. This is not adjustable from the front panel. Pressing **Previous** goes to menu 4.4. Pressing **Raise/Scroll** goes to menu 4.5. Pressing **Lower/Scroll** goes to menu 4.3.

Menu 4.5. Menu 4.5 displays cycle crank time. Pressing **Select/Enter** displays the cycle crank time selected. This is not adjustable from the front panel. Pressing **Previous** goes to menu 4.5. Pressing **Raise/Scroll** goes to menu 4.6. Pressing **Lower/Scroll** goes to menu 4.4.

Menu 4.6. Menu 4.6 displays precrank delay time. After pressing **Raise/Scroll** or **Lower/Scroll**, the user will be instructed to enter the user key code. After entering the user key code followed by pressing **Select/Enter** twice, the setting will be adjustable with the **Raise/Scroll** and **Lower/Scroll** keys. After the desired setting has been selected press **Select/Enter** to save the new setting. Pressing **Previous** goes to menu 4.6. Pressing **Raise/Scroll** goes to menu 4.7. Pressing **Lower/Scroll** goes to menu 4.5.

Menu 4.7. Menu 4.7 displays the status of the Precrank contact after cranking. After pressing **Raise/Scroll** or **Lower/Scroll**, the user will be instructed to enter the user key code. After entering the user key code followed by pressing **Select/Enter** twice, the setting will be adjustable with the **Raise/Scroll** and **Lower/Scroll** keys. After the

Katolight Service - Master Repair Manual - Page 1984

desired setting has been selected, press **Select/Enter** to save the new setting. Pressing **Previous** goes to menu 4.7. Pressing **Raise/Scroll** goes to menu 4.1. Pressing **Lower/Scroll** goes to menu 4.6.

Pressing **Previous** twice goes to the normal display mode.

Exiting Menu Mode

You may exit Menu mode (from any menu level) by pressing the **Display Toggle** pushbutton. If the **Display Toggle** pushbutton is pressed before a parameter setpoint change has been saved, then the old setpoint value is preserved.

NOTE
Using DISPLAY TOGGLE to exit Menu mode will save the user's place within the menu system so that the next time Menu mode is entered, the display will return to the same screen.

As an alternative, pressing **Previous** allows the user to back out of the menu mode one level at a time so that the next time menu mode is entered, the display will start at the top of the menu structure.

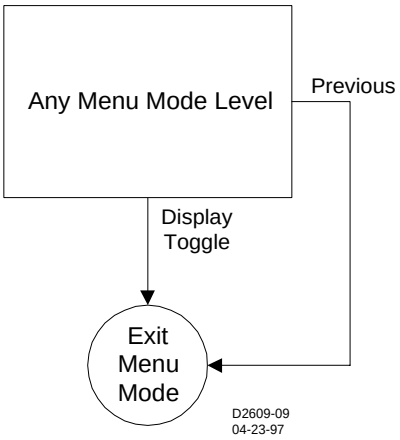

Figure 3-11. Exiting Menu Mode

Modifying Setpoints

To modify an existing setpoint, press the **Select/Enter** pushbutton (Figure 3-12). Press **Raise/Scroll** or **Lower/Scroll** buttons to raise or lower the current parameter setpoint. Press the **Select/Enter** pushbutton to save the modified setpoint value, or press the **Previous** pushbutton to exit the parameter setting screen without changing the value.

Once in the menu mode, the first time an attempt is made to change a setting that is front panel adjustable, the user will be prompted to enter the keycode. Upon successful entry of the keycode, the user may modify any of the adjustable settings without re-entering the keycode during the current menu mode session. The only exception to this is changing the keycode itself. Changing the keycode always requires entry of the existing keycode. Also, whether the keycode is actually changed or not, any further changes to other settings after that will require the keycode to be entered once again. Leaving the Menu mode after an editing session automatically terminates the editing privilege.

Press the **Display Toggle** pushbutton to exit the menu mode.

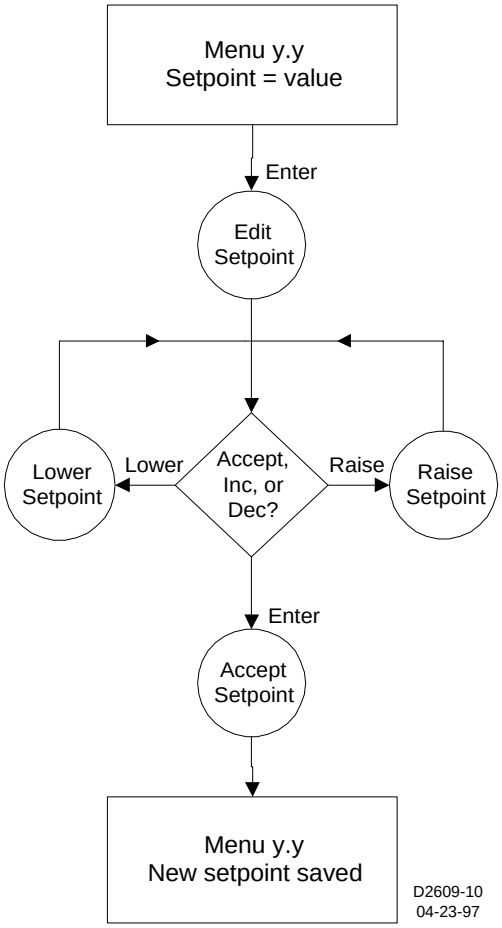

Figure 3-12. Modifying Setpoints

Alternate Display Mode

After pressing the **Display/Toggle** pushbutton to enter the alternate display mode, pressing the **Raise/Scroll** or **Lower/Scroll** pushbutton allows the user to scroll through the alternate display mode screens.

The quantities are displayed in the following order.

- OIL PRESSURE
- COOLANT TEMPERATURE
- FUEL LEVEL
- BATTERY VOLTAGE
- TOTAL KILOWATT LOAD
- HOURS TO NEXT SERVICE
- GENERATOR A-B VOLTAGE
- GENERATOR B-C VOLTAGE (3-PHASE SENSING ONLY)
- GENERATOR C-A VOLTAGE (3-PHASE SENSING ONLY)
- GENERATOR A-N VOLTAGE (3-PHASE L-N SENSING)
- GENERATOR B-N VOLTAGE (3-PHASE L-N SENSING)
- GENERATOR C-N VOLTAGE (3-PHASE L-N SENSING)
- BUS VOLTAGE
- GENERATOR PHASE A CURRENT (3-PHASE SENSING ONLY)
- GENERATOR PHASE B CURRENT (3-PHASE SENSING ONLY)
- GENERATOR PHASE C CURRENT (3-PHASE SENSING ONLY)
- PHASE A kVA (3-PHASE SENSING ONLY)
- PHASE B kVA (3-PHASE SENSING ONLY)
- PHASE C kVA (3-PHASE SENSING ONLY)
- TOTAL kVA
- GENERATOR PHASE A KILOWATTS (3-PHASE SENSING ONLY)
- GENERATOR PHASE B KILOWATTS (3-PHASE SENSING ONLY)
- GENERATOR PHASE C KILOWATTS (3-PHASE SENSING ONLY)
- GENERATOR TOTAL KILOWATT-HOURS
- GENERATOR POWER FACTOR
- GENERATOR FREQUENCY
- BUS FREQUENCY
- TOTAL RUN HOURS
- FUEL LEAK STATUS
- ENGINE SPEED

FACTORY KEY CODE SETTING

Factory preprogrammed key code setting.

1. Raise/Scroll
2. Lower/Scroll
3. Select/Enter
4. Previous
5. Display Toggle
6. Enter
7. Enter

ALLOWABLE KEY CODE PUSHBUTTONS

User key codes are one to eight presses of any of the following acceptable pushbuttons in any order, except **Previous** twice consecutively. When used, the key code must be followed by two presses of the Select/Enter pushbutton.

- Raise/Scroll
- Lower/Scroll
- Select/Enter
- Previous
- Display/Toggle
- Phase Toggle
- Alarm Silence
- Lamp Test

PARAMETERS AND DEFAULT SETTINGS

Front Panel Adjustable Parameters

All settings are viewable at the front panel. The following settings are adjustable at the front panel.

- Sensor failure alarm time delay — From 1 to 10 seconds in 1 second increments
- Metric conversion function — ON or OFF
- Low fuel prealarm level — 10 to 100%
- Precrank contact after cranking — OPEN or CLOSED
- Cool down time — From 0 to 60 minutes in 5 minute increments
- Precrank time delay — From 0 to 30 seconds in 1 second increments

All Parameters

Specific parameters (settings) are not adjustable at either the front panel or through computer communications. These settings are identified in the following list as (not adjustable). All other parameters may be set through computer communications. Only those settings identified in the previous paragraph are adjustable at the front panel. The following list provides the parameters and the default setting.

Metric Conversion (ON, OFF) default is OFF
Generator Connection (3-phase$_{L-L}$ or 3-phase$_{L-N}$, 1-phase$_{A-B}$) default is 3-phase$_{L-N}$
Gen. PT Primary (1 - 15000 V) default is 480 V
Gen. PT Secondary (1 - 480 V) default is 480 V
Gen. CT Primary (1 - 5000 A) default is 500 A
Bus. PT Primary (1 - 15000 V) default is 480 V
Bus. PT Secondary (1 - 480 V) default is 480 V
Cooldown time (0 - 60 minutes) default is 0 minutes
Generator Speed Signal Sources = MPU/Alt/Gen
Overspeed Alarm:
    Threshold (105 - 140%) default is 110%
    Activation Delay (10 - 500 milliseconds) default is 50 milliseconds
High Coolant Temperature Alarm:
    Threshold (100 - 280ºF) default is 275ºF
    Arming Delay (not adjustable) is 60 seconds
High Coolant Temperature Prealarm is OFF:
    Threshold (100 - 280ºF) default is 250ºF
    Arming Delay default is 60 seconds
Low Oil Pressure Alarm:
    Threshold (3 - 100 PSI) default is 15 PSI
    Arming Delay (5 - 15 seconds) default is 10 seconds

Low Oil Pressure Prealarm:
Threshold (3 - 100 PSI) default is 25 PSI
Arming Delay (5 - 15 seconds) default is 10 seconds
Low Coolant Temperature Prealarm is OFF:
Threshold (40 - 100 F) default is 50 F
Arming Delay (0 - 15 seconds) default is 0 seconds
Low Fuel Level Prealarm is OFF:
Threshold (10 - 100 %) default is 25 %
Activation Delay (not adjustable) is 0 seconds
Weak Battery PreAlarm is OFF:
Threshold (4 - 8/8 - 16 V) default is 7.2/15.0 V (for 12/24 V systems)
Activation Delay (1 - 10 seconds) default is 2 seconds
Low Battery Prealarm is OFF:
Threshold (6 - 12/12 - 24 V) default is 9.0/20.0 V (for 12/24 V systems)
Activation Delay (1 - 10 seconds) default is 10 seconds
Battery Overvoltage Prealarm is OFF:
Threshold (14 - 16/24-32 V) default is 15.0/30.0 V (for 12/24 V systems)
Activation Delay (not adjustable) is 0 seconds
Battery Charger Failure Prealarm is OFF:
Activation Delay (not adjustable) is 0 seconds
Global Sender Failure Alarm Delay (1 - 10 seconds) default is 10 seconds:
(This covers the oil pressure sender, generator sensing voltage, and speed signal sources)
Speed Signal Failure Alarm (ON, OFF) default is OFF.
Oil Pressure Sender Failure Alarm (ON, OFF) default is OFF.
Generator Sensing Voltage Failure Alarm (ON, OFF) default is OFF.
Coolant Temperature Sender Failure Alarm (ON, OFF) default is OFF.
Arming Delay (5 - 30 minutes) default is 5 minutes
(Global) Prealarm Buzzer default is ON.
Maintenance Interval Prealarm:
Threshold (0 - 5000 hours) default is 500 hours
Activation Delay (not adjustable) is 0 hours
Engine KW Overload Prealarm is OFF:
Threshold (95 - 140%) default is 105%
Activation Delay (not adjustable) is 0 seconds
Cranking style (CONTINUOUS/CYCLE) is CYCLE
crank cycles (1 - 7 cycles) default is 2 cycles
Cycle crank time (5 - 15 seconds) default is 5 seconds
Continuous crank time (1 - 60 seconds) default is 10 seconds
Precrank delay (0 - 30 seconds) default is 0 seconds
Prestart contact after crank disconnect is OFF (OPEN)

Katolight Service - Master Repair Manual - Page 1990

SECTION 4 • INSTALLATION

GENERAL

KDGC-2000 Digital Generator Controllers are delivered in sturdy cartons to prevent shipping damages.If the controller is not installed immediately, store it in the original shipping package in a moisture and dust free environment.

HARDWARE

KDGC-2000 Controllers are packaged in aluminum cases for improved electromagnetic compatibility and are suitable for mounting in any top mount enclosure. The metal case is resistant to moisture, salt fog, humidity, dust, dirt, and chemical contaminants. It also inhibits insect and rodent entrance. KDGC-2000 Controllers are mounted using the permanently attached 10-32 by 5/8 inch (1/2 inch usable) studs.

MOUNTING

Case cutout dimensions are shown in Figure 4-1. Overall dimensions are shown in Figures 4-2 and 4-3.

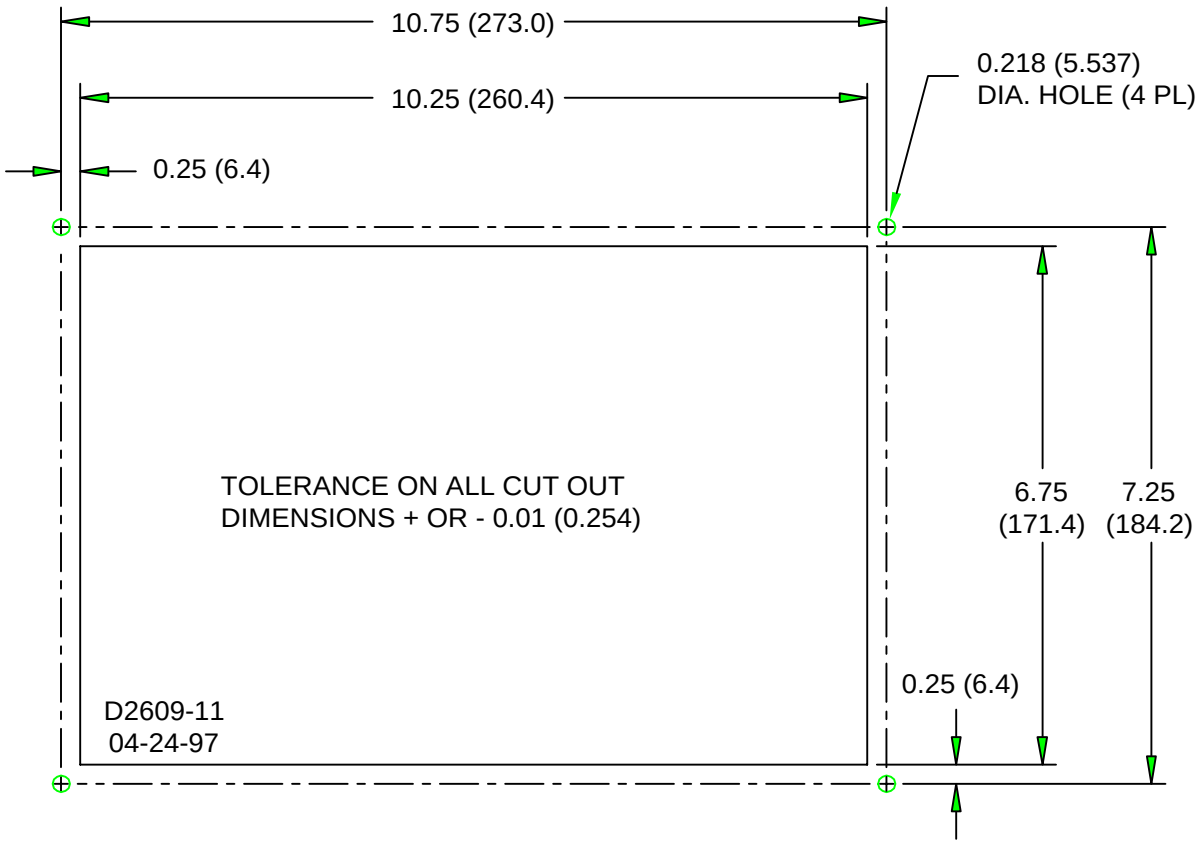

Figure 4-1. Cutout Dimensions In Inches (Millimeters)

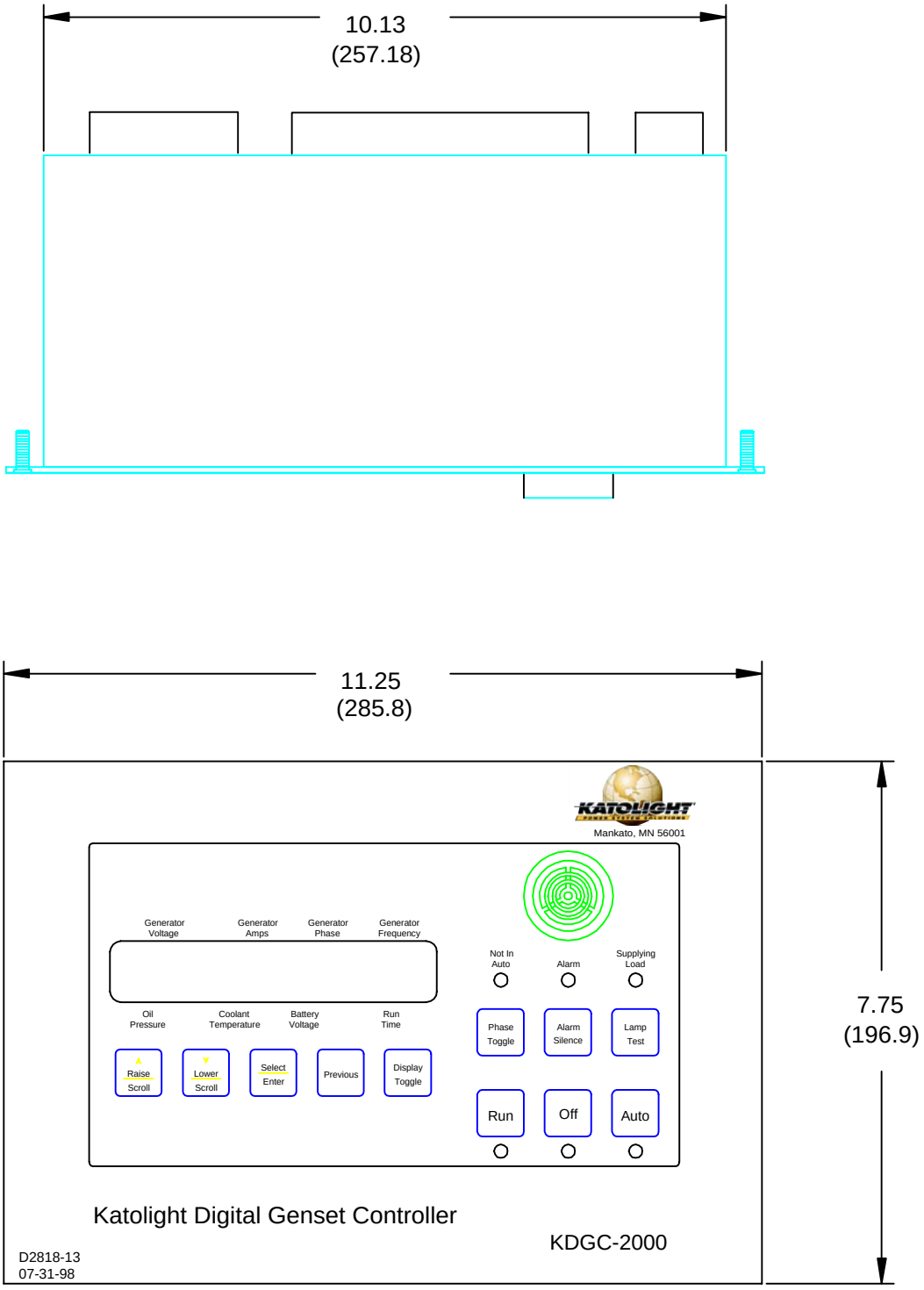

Figure 4-2. KDGC-2000 Overall Dimensions In Inches (Millimeters)

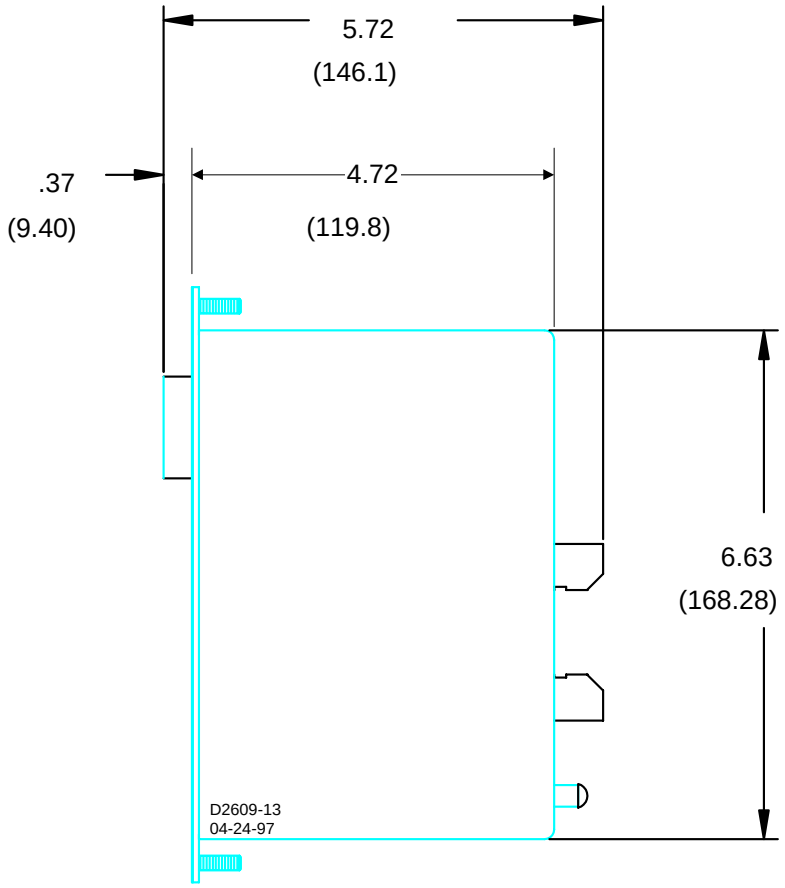

Figure 4-3. KDGC-2000 Overall Dimensions In Inches (Millimeters)

CONNECTIONS

Incorrect wiring may result in damage to the controller.

CAUTION

Be sure the controller battery input polarity is wired correctly. Reverse polarity battery power will damage the controller.

NOTE

Be sure the controller is hard-wired to earth ground with no smaller than 12 AWG copper wire attached to the ground terminal on the rear of the controller case

Except as noted above, connections should be made with minimum wire size of 14 AWG. Be sure to use the correct input power for the power supply. Figure 4-4 is a typical ac connection diagram for direct connected single-phase sensing system. Figure 4-5 is a typical ac connection diagram for direct connected three-phase line to line sensing system. Figure 4-6 is a typical ac connection diagram for direct connected three-phase line to neutral sensing system.

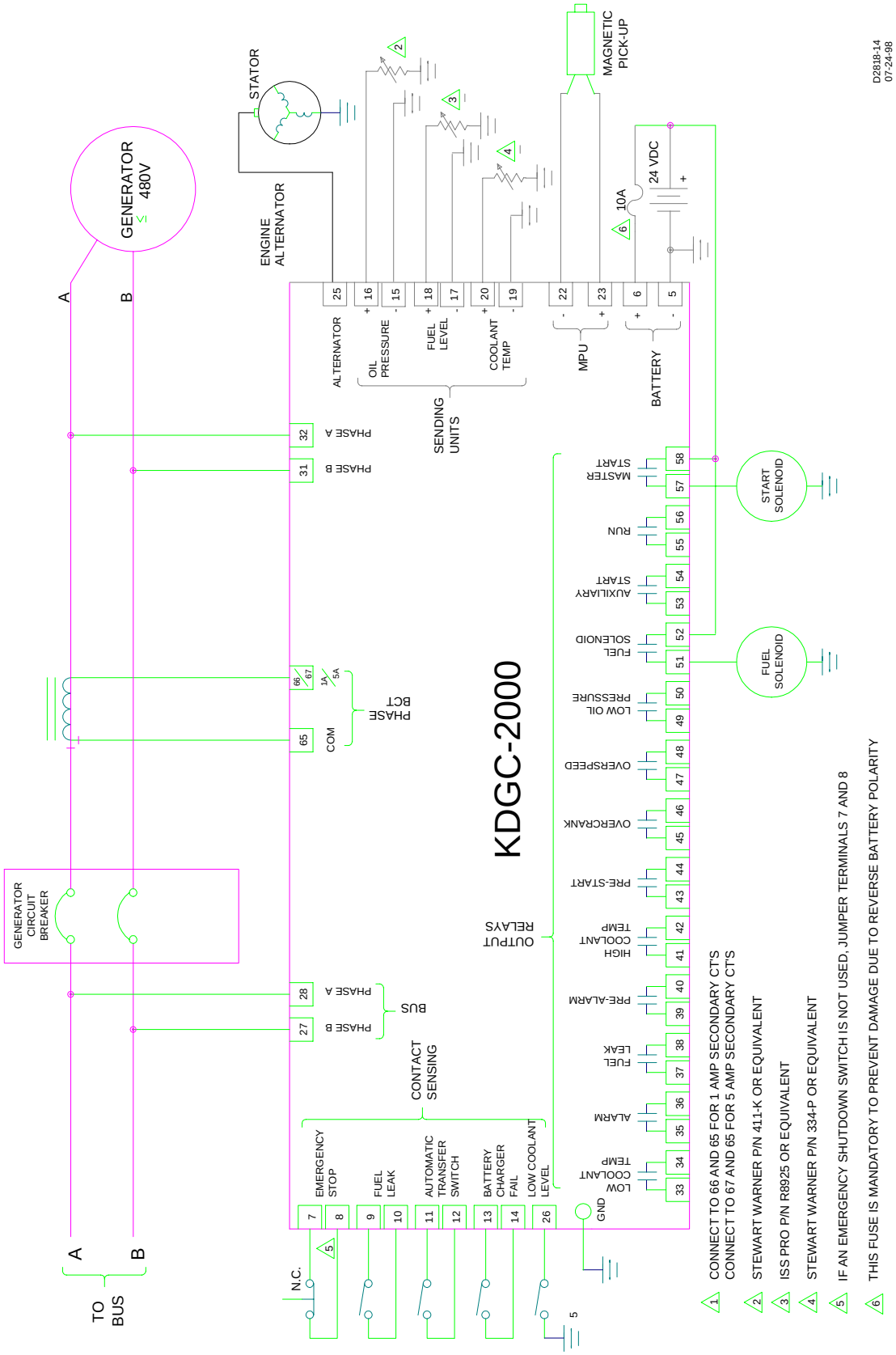

Figure 4-4. KDGC-2000 Direct Connected Single-Phase Sensing

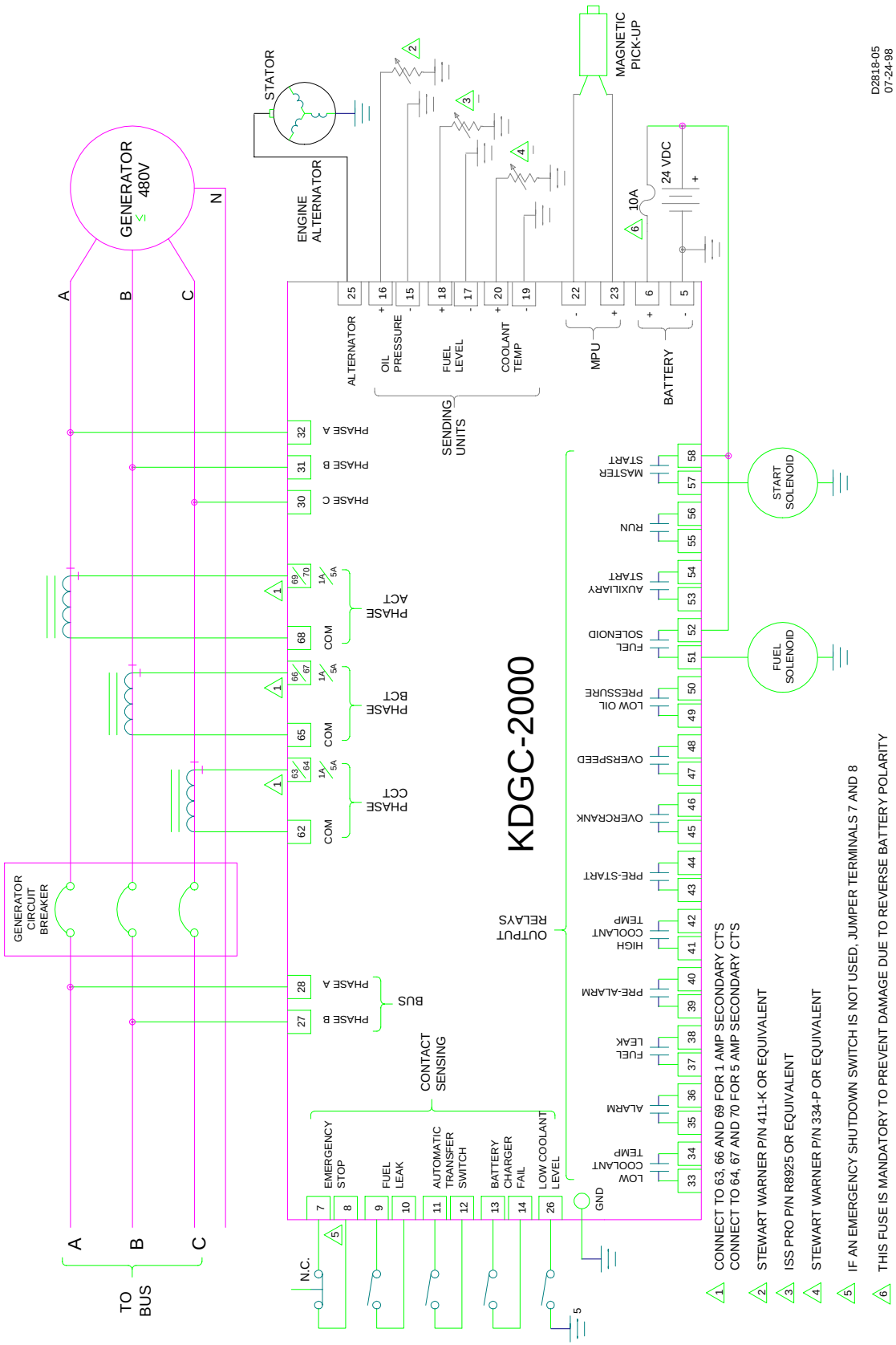

Figure 4-5. KDGC-2000 Direct Connected Three-Phase Line To Line Sensing

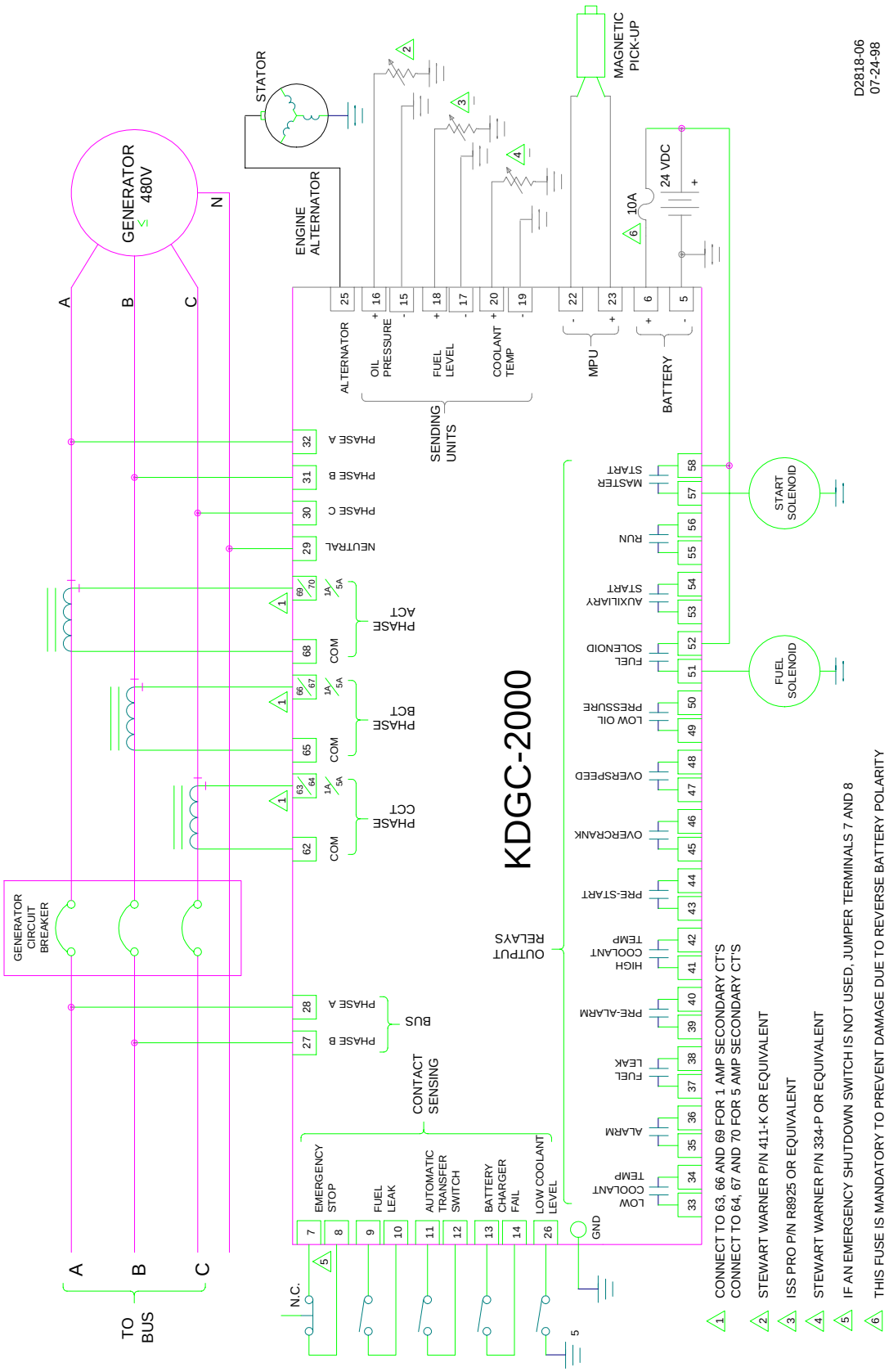

Figure 4-6. KDGC-2000 Direct Connected Three-Phase Line To Neutral Sensing

RS-232 Connector

The RS-232 connector is a DB-9 female connector. Connector pin numbers, functions, names, and signal directions are shown in Table 4-1. Figure 4-7 provides the RS-232 cable connection diagram.

Table 4-1. RS-232 Pinouts

Pin	Function	Name	Direction
1	N/C	----	N/A
2	Transmit Data	(TXD)	From KDGC-2000
3	Receive Data	(RXD)	Into KDGC-2000
4	N/C	----	N/A
5	Signal Ground	(GND)	N/A
6	N/C	----	N/A
7	N/C	----	N/A
8	N/C	----	N/A
9	N/C	----	N/A

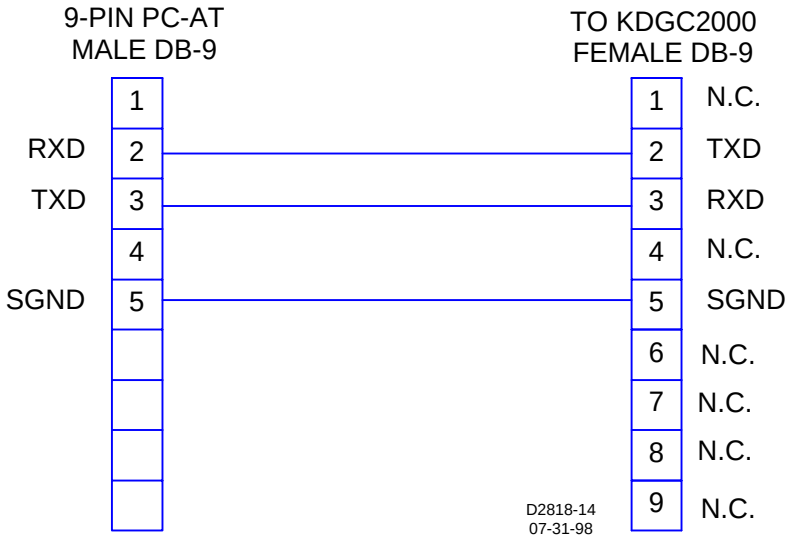

Figure 4-7. Personal Computer To KDGC-2000

Communication Settings

Communication settings are the formal set of conventions controlling the format and relative timing of message exchange between two communications terminals.

Default settings baud rate = 9600, parity = None, and stop bits = 1

Katolight Service - Master Repair Manual - Page 1998

SECTION 5 • TESTING

INTRODUCTION

This section provides a procedure for testing the KDGC-2000 using the preset factory default settings.

EQUIPMENT REQUIRED

- DC Power Supply, 24 Volts
- 10 Amp Fuse
- Voltage Source, 60 hertz, 0 to 120V
- Current Source, 60 hertz, 0 to 5A
- Signal Generator, Sine Wave, 0 to 5k hertz, 0 to 5V
- Digital Voltmeter, 4 1/2 Digits (Fluke 8050A or Equivalent)
- Continuity Tester
- Four Single-Pole Switches
- 2 each, 250 ohm variable resistors
- 1 each 2500 ohm variable resistor

INITIAL TEST PROCEDURE

Unless otherwise specified, the test procedures in this manual use the default parameter settings provided in Table 5-1.

Table 5-1. Default Parameter Settings

PARAMETER	SETTING
Comm Baud Rate	9600 Baud
Remote Delay Time	1 Millisecond/10
Comm Parity	None
Device Address	125
Modem Time Delay	9000 Microseconds
Embedded Code Version No.	Ver. No.
Settings Source	User
Generator Connection	3-ph L-N
NFPA Level	0
Unit System	English
Battery Volts	24 Volts
Generator Frequency	60 Hz
Rated Engine RPM	1800 RPM
Number Flywheel Teeth	126
Genset KW Rating	300 kilowatt
No Load Cool Down Time	0 Minutes
Alternator Frequency Rated	600 Hertz
Generator PT Primary Voltage	480 Vac
Generator PT Secondary Voltage	480 Vac
Generator CT Primary Current	500 Aac
Bus PT Primary Voltage	480 Vac
Bus PT Secondary Voltage	480 Vac
Low Fuel Pre-Alarm Enable	OFF
Low Fuel Pre-Alarm Threshold	25 % Full Tank

PARAMETER	SETTING
Low Coolant Temperature Pre-Alarm Enable	OFF
Low Coolant Temperature Pre-Alarm Threshold	50 Degrees F
Battery Overvoltage Pre-Alarm Enable	OFF
Battery Overvoltage Pre-Alarm Threshold	30.0 VDC
Maintenance Interval Pre-Alarm Enable	OFF
Maintenance Interval Pre-Alarm Threshold	500 Hours
Engine KW Overload Pre-Alarm Enable	OFF
Engine KW Overload Pre-Alarm Threshold	105 % of Rated
High Coolant Temperature Pre-Alarm Enable	ON
High Coolant Temperature Pre-Alarm Threshold	250 Degrees F
Low Oil Pressure Pre-Alarm Enable	ON
Low Oil Pressure Pre-Alarm Threshold	25 PSI
Low Battery Voltage Pre-Alarm Enable	OFF
Low Battery Voltage Pre-Alarm Threshold	20.0 VDC
Low Battery Voltage Pre-Alarm Activation Time Delay	10 Seconds
Weak Battery Pre-Alarm Enable	OFF
Weak Battery Pre-Alarm Threshold	15.0 VDC
Weak Battery Pre-Alarm Activation Time Delay	2 Seconds
High Coolant Temperature Alarm Enable	ON
High Coolant Temperature Alarm Threshold	275 Degrees F
High Coolant Temperature Alarm Arming Delay After Crank Disconnect	60 Seconds
Low Oil Pressure Alarm Enable	ON
Low Oil Pressure Alarm Threshold	15 PSI
Low Oil Pressure Alarm Arming Delay After Crank Disconnect	10 Seconds
Overspeed Alarm Enable	ON
Overspeed Alarm Threshold	110% of Rated
Overspeed Alarm Activation Time Delay	50 Millisecond
Coolant Temperature Sender Failure Alarm Enable	OFF
Oil Pressure Sender Failure Alarm Enable	OFF
Speed Failure Alarm Enable	OFF
Loss of Generator Voltage Alarm Enable	OFF
Pre-Alarm Buzzer Enable	ON
Battery Charger Failure Pre-Alarm Enable	OFF
Global Sender Failure Alarm Time Delay	10 Seconds
Coolant Temp. Sender Failure Alarm Activation Time Delay	5 Minutes
Cranking Style	Cycle
Number of Crank Cycles	2
Cycle Crank Time	5 Seconds
Continuous Crank Time	10 Seconds
Crank Disconnect Limit	30 % of Rated
Pre-Crank Delay	0 Seconds
Pre-crank Contact After Crank Disconnect	Open
Generator Speed Mode	MPU/ALT/GEN
Generator Rotation	A-B-C

Step 1. Connect the KDGC-2000 test setup as shown in Figure 5-1.

Step 2. Apply operating voltage to battery voltage terminals.

Result: The LCD displays KDGC 2000 and the software version for approximately one second before switching to the normal display mode and at the same time, the Alarm sounds. The audible alarm will sound continuously when Not In Auto or in Alarm. The audible alarm may be silenced by pressing the Alarm Silence switch on the front panel.

Step 3 Press the Off switch to place the KDGC-2000 in the OFF position.

Step 4. Verify that LEDs Not In Auto and Off are ON, the Alarm LED is flashing, and the LCD backlight is ON with system parameters displayed.

Step 5. Press the Lamp Test switch and verify that all six LEDs are ON (Not In Auto, Alarm, and Off are red; Supplying Load, Run, and Auto are green). All LCD pixels should be visible.

Step 6. Verify Run, Off, and Auto switches, along with their respective LEDs, toggle as each switch is operated. Not In Auto LED should be OFF when Auto is selected.

Step 7. Verify that switches Raise/Scroll, Lower/Scroll, Select/Enter, Previous, and Display/Toggle are functional by scrolling through the unit menus.

METERING TEST PROCEDURES

Metering Battery And Generator Voltages

NOTE

Displayed voltage is equal to the generator potential transformer primary voltage setting times the applied voltage divided by the generator potential transformer secondary voltage setting.

Step 1. Verify that the battery input (terminals 5 and 6) voltage is 24.0 Vdc.

Step 2. Verify that the KDGC-2000 displayed value is 24.0 ±0.5 Vdc.

Step 3. Apply 120.0 Vac, 60.0 hertz to phase A (line to neutral) generator voltage input (terminals 32 and 29).

Step 4. Verify that the KDGC-2000 generator frequency displayed value is 60.0 ±0.2 hertz.

Step 5. Verify that the KDGC-2000 phase A to neutral voltage displayed value is 120.0 ±2.0 Vac.

Step 6. Remove the voltage.

Step 7. Apply 120.0 Vac, 60.0 hertz to phases A and B generator voltage input (terminals 32 and 31).

Step 8. Verify that the KDGC-2000 generator A to B voltage displayed value is 120.0 ±2.0 Vac.

Step 9. Remove the voltage.

Step 10. Apply 120.0 Vac, 60.0 hertz (line to neutral) to phase B generator voltage input (terminals 31 and 29).

Step 11. Verify that the KDGC-2000 line to neutral voltage displayed value is 120.0 ±2.0 Vac.

Step 12. Remove the voltage.

Step 13. Apply 120.0 Vac, 60.0 hertz to phases B and C generator voltage input (terminals 31 and 30).

Step 14. Verify that the KDGC-2000 generator B to C voltage displayed value is 120.0 ±2.0 Vac.

Step 15. Remove the voltage.

Step 16. Apply 120.0 Vac, 60.0 hertz (line to neutral) to phase C generator voltage input (terminals 30 and 29).

Step 17. Verify that the KDGC-2000 line to neutral voltage displayed value is 120.0 ±2.0 Vac.

Step 18. Remove the voltage.

Step 19. Apply 120.0 Vac, 60.0 hertz to phases C and A generator voltage input (terminals 30 and 32).

Step 20. Verify that the KDGC-2000 generator C to A voltage displayed value is 120.0 ±2.0 Vac.

Step 21. Remove the voltage.

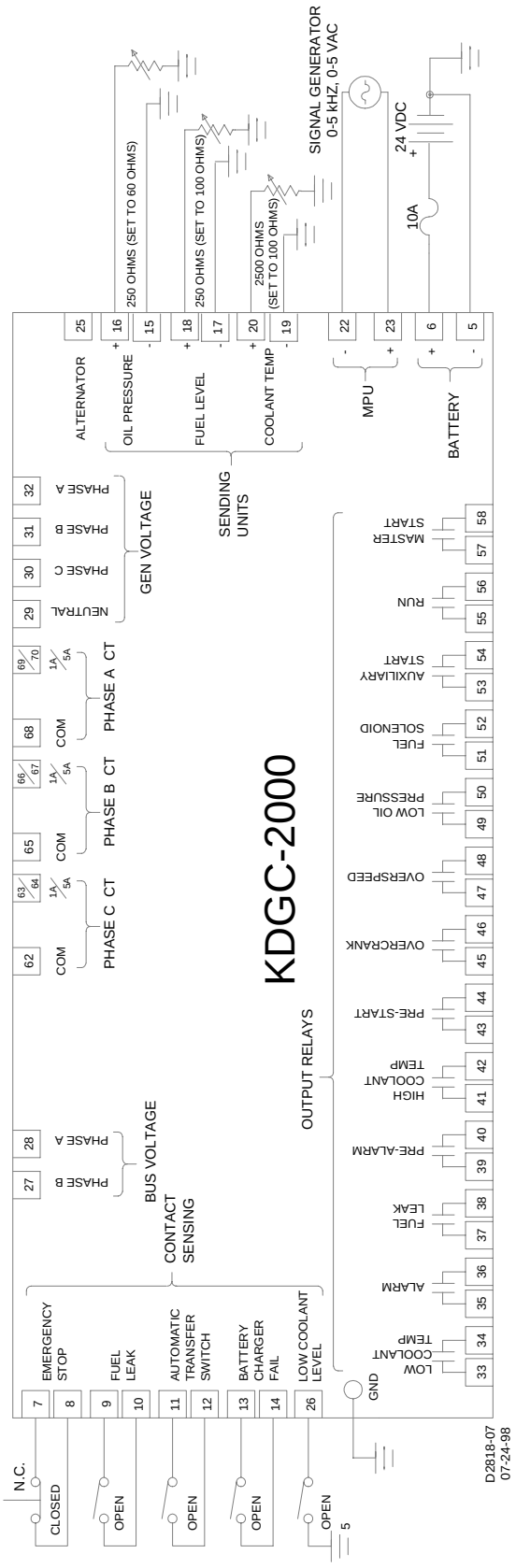

Figure 5-1. Test Set Diagram

Metering Bus Voltages

> **NOTE**
>
> Displayed voltage is equal to the bus potential transformer primary voltage setting times the applied voltage divided by the bus potential transformer secondary voltage setting.

Step 1. Apply 120.0 Vac, 60.0 hertz to phases A and B bus voltage input (terminals 28 and 27).

Step 2. Verify that the KDGC-2000 bus A and B frequency displayed value is 60.0 ±0.2 hertz.

Step 3. Verify that the KDGC-2000 bus A and B voltage displayed value is 120.0 ±2.0 Vac.

Step 4. Remove the voltage.

Metering Generator Current

> **NOTE**
>
> Displayed current is equal to the generator current transformer primary current setting times the applied current divided by one or five (the nominal current value).

Step 1. Apply 1.000 Aac to the KDGC-2000 generator five ampere phase A CT input (terminals 70 and 68).

Step 2. Verify that the KDGC-2000 phase A current displayed value is 100.0 ±2.0 amperes.

Step 3. Remove the current.

Step 4. Apply 1.000 Aac to the KDGC-2000 generator five ampere phase B CT input (terminals 67 and 65).

Step 5. Verify that the KDGC-2000 phase B current displayed value is 100.0 ±2.0 amperes.

Step 6. Remove the current.

Step 7. Apply 1.000 Aac to the KDGC-2000 generator five ampere phase C CT input (terminals 64 and 62).

Step 8. Verify that the KDGC-2000 phase C current displayed value is 100.0 ±2.0 amperes.

Step 9. Remove the current.

Oil Pressure

Step 1. Apply 60 ohms across the Oil Pressure sender input (terminals 16 and 5).

Step 2. Verify that the KDGC-2000 displayed value is 80 ±2.0 PSI.

Coolant Temperature

Step 1. Apply 100 ohms across the Coolant Temperature sender input (terminals 20 and 5).

Step 2. Verify that the KDGC-2000 displayed value is 205 ±4.0° C.

Percent Fuel Level

Step 1. Apply 100 ohms across the Fuel Level sender input (terminals 18 and 5).

Step 2. Verify that the KDGC-2000 displayed value is 40 ±2.0%.

Engine Speed (RPM)

> **NOTE**
>
> RPM as derived from the MPU is equal to [MPU output frequency (hertz) times 60] divided by the number of flywheel teeth.
>
> RPM as derived from the alternator is equal to [alternator output frequency (hertz) times rated RPM] divided by the rated alternator frequency (hertz).
>
> RPM as derived from the generator is equal to [generator output voltage frequency (phase A to neutral in hertz)] divided by the rated generator frequency (hertz).

Step 1. Apply a 5 Vac, 3780 hertz sine wave to the KDGC-2000 magnetic pickup unit inputs (terminals 23 and 22).

Step 2. Verify that the KDGC-2000 displayed value is 1800 ±36 RPM.

Step 3. Remove the voltage.

Generator Power Factor

> **NOTE**
>
> The KDGC-2000 uses phase A voltage and phase B current for Power Factor calculations. Therefore, if this test is performed with the current lagging the voltage by 120 degrees., the displayed Power Factor will be approximately 1.00.

Step 1. Apply 120 Vac to phase A to neutral generator voltage inputs (terminals 32 and 29).

Step 2. Apply 1.0 Aac to phase B current transformer inputs (terminals 67 and 65) in phase with the phase A to neutral voltage.

Step 3. Verify that the KDGC-2000 displayed value is -0.50 ±0.02.

Step 4. Remove voltage and current.

Generator kW And kVA

> **NOTE**
>
> The displayed kW is equal to the kVA times the Power Factor.

Step 1. Apply in parallel 120 Vac to phase A to neutral (terminals 32 and 29), phase B to neutral (terminals 31 and 29), and phase C to neutral (terminals 30 and 29).

Step 2. Apply in series and in phase with the voltage 1 Aac to Phase A current transformer input (terminals 69 and 68), Phase B current transformer input (terminals 66 and 65), and Phase C current transformer input (terminals 63 and 62).

Step 3. Verify that the KDGC-2000 displayed value for individual phase kW is -30 ±2 kW.

Step 4. Verify that the KDGC-2000 displayed value for total kW is -90 ±2 kW.

Step 5. Verify that the KDGC-2000 displayed value for individual phase kVA is 60 ±2 kVA.

Step 6. Verify that the KDGC-2000 displayed value for total kVA is within 180 ±5 kVA.

Step 7. Remove voltage and current.

CRANKING TEST PROCEDURES

Crank Cycle

> **NOTE**
>
> The KDGC will go into Overcrank if the Off switch is not pressed before two crank cycles expire. Pressing Off will reset this condition if it occurs.

Step 1. Verify that all output contacts are open.

Step 2. Press the Run switch on the front panel.

Step 3. Verify that the KDGC-2000 displays CRANKING STATUS.

Step 4. Verify that only the Master Start, Auxiliary Start, Fuel Solenoid, and Pre-Start output contacts are closed during CRANKING CYCLE.

Step 5. Verify that only the Pre-Start contact remains closed during RESTING.

Step 6. Press the Off switch on the front panel.

Step 7. Press the Auto switch on the front panel.

Step 8. Apply a contact closure across the Automatic Transfer Switch inputs (terminals 11 and 12).

Step 9. Verify that the KDGC-2000 displays CRANKING STATUS.

Step 10. Verify that only the Master Start, Auxiliary Start, Fuel Solenoid, and Pre-Start output contacts are closed during CRANKING CYCLE.

Step 11. Verify that only the Pre-Start contact remains closed during RESTING.

Step 12. Press the Off switch on the front panel.

Step 13. Open the contact across the Automatic Transfer Switch inputs.

Running

Step 1. Press the Run switch on the front panel.

Step 2. Within 5 seconds of beginning cranking, apply in parallel 120 Vac to phase A to neutral (terminals 32 and 29), phase B to neutral (terminals 31 and 29), and phase C to neutral (terminals 30 and 29).

Step 3. Verify that only the Run and Fuel Solenoid output contacts are closed.

Step 4. Verify that the KDGC-2000 normal mode display now meters the active generator values listed on the front panel instead of displaying READY.

Step 5. Press the Off switch on the front panel.

Step 6. Remove the voltage.

Step 7. Press the Auto switch on the front panel.

Step 8. Apply a contact closure across the Automatic Transfer Switch inputs (terminals 11 and 12).

Step 9. Within 5 seconds of beginning cranking, apply in parallel 120 Vac to phase A to neutral (terminals 32 and 29), phase B to neutral (terminals 31 and 29), and phase C to neutral (terminals 30 and 29).

Step 10. Verify that only the Run and Fuel Solenoid output contacts are closed.

Step 11. Verify that the KDGC-2000 normal mode display now meters the active generator values listed on the front panel instead of displaying READY.

Step 12. Press the Off switch on the front panel.

Step 13. Remove the voltage.

Step 14. Open the contact across the Automatic Transfer Switch inputs.

PROTECTIVE FUNCTIONS

Overcrank

Step 1. Press the Run switch on the front panel.

Step 2. Verify that after two cycles the KDGC-2000 display indicates GEN OVER-CRANK ALARM and that only the Alarm, Fuel Leak, and Overcrank output contacts are closed.

Step 3. Press the Off switch on the front panel and verify that the KDGC-2000 resets to the Ready mode and that all output contacts open.

Overspeed

Step 1. Apply in parallel 120 Vac to phase A to neutral (terminals 32 and 29), phase B to neutral (terminals 31 and 29), and phase C to neutral (terminals 30 and 29).

Step 2. Apply a 5 Vac, 4000 hertz sine wave to the KDGC-2000 MPU inputs (terminals 23 and 22).

Step 3. Press the Run switch on the front panel.

Step 4. Slowly increase the frequency to the KDGC-2000 MPU input until an overspeed shutdown occurs.

Step 5. Verify shutdown occurs within 4158 ±83 hertz (1980 ±38 RPM).

Step 6. Verify that the KDGC-2000 display indicates GEN OVERSPEED ALARM and that only the Alarm, Fuel Leak, and Overspeed output contacts are closed.

Step 7. Remove the voltages.

Step 8. Press the Off switch on the front panel and verify that the KDGC-2000 resets to the Ready mode and that all output contacts open.

Low Oil Pressure

Step 1. Apply in parallel 120 Vac to phase A to neutral (terminals 32 and 29), phase B to neutral (terminals 31 and 29), and phase C to neutral (terminals 30 and 29).

Step 2. Press the Run switch on the front panel.

Step 3. Wait ten seconds after crank disconnect. Increase the resistance across the Oil Pressure sender input (terminals 16 and 5) until a Pre-Alarm occurs.

Step 4. Verify that the KDGC-2000 display value is 25 ±2 PSI when Pre-Alarm occurs.

Step 5. Verify that the KDGC-2000 displays an alternately flashing dark field in the oil pressure location and that the Pre-Alarm output contact has closed.

Step 6. While monitoring displayed oil pressure, further increase the resistance across the Oil Pressure sender input until a low oil pressure shutdown occurs.

NOTE
Oil Pressure displayed value is 0 below 15 PSI.

Step 7. Verify that the KDGC-2000 displayed value is within 0 to 17 PSI when shutdown occurs.

Step 8. Verify that the KDGC-2000 display indicates LOW OIL PRESSURE ALARM and that only the Alarm, Fuel Leak, and Low Oil Pressure output contacts are closed.

Step 9. Remove the voltage and return the resistance to 60 ohms.

Step 10. Press the Off switch on the front panel and verify that the KDGC-2000 resets to the Ready mode and that all output contacts open.

High Coolant Temperature

Step 1. Apply in parallel 120 Vac to phase A to neutral (terminals 32 and 29), phase B to neutral (terminals 31 and 29), and phase C to neutral (terminals 30 and 29).

Step 2. Press the Run switch on the front panel.

Step 3. Wait 60 seconds after crank disconnect. Decrease the resistance across the Coolant Temperature sender input (terminals 20 and 5) until a Pre-Alarm occurs.

Step 4. Verify that the KDGC-2000 display value is 250 ±5 degrees when Pre-Alarm occurs.

Step 5. Verify that the KDGC-2000 displays an alternately flashing dark field in the coolant temperature location and that the Pre-Alarm output contact has closed.

Step 6. While monitoring displayed coolant temperature, further decrease the resistance across the Coolant Temperature sender input until an over temperature shutdown occurs.

Step 7. Verify that the KDGC-2000 displayed value is 275 ±6 degrees when shutdown occurs.

Step 8. Verify that the KDGC-2000 indicates OVER TEMP ALARM and that only the Alarm, Pre-Alarm, Fuel Leak, and High Coolant Temperature output contacts are closed.

Step 9. Remove the voltage and return the resistance to 100 ohms.

Step 10. Press the Off switch on the front panel and verify that the KDGC-2000 resets to the Ready mode and that all output contacts open.

Fuel Leak

Step 1. Apply in parallel 120 Vac to phase A to neutral (terminals 32 and 29), phase B to neutral (terminals 31 and 29), and phase C to neutral (terminals 30 and 29).

Step 2. Press the Run switch on the front panel.

Step 3. Apply a contact closure across the Fuel Leak Inputs (terminals 9 and 10).

Step 4. Verify that the KDGC-2000 indicates FUEL LEAK SHUTDOWN (CLOSED) and that the Alarm and Fuel Leak output contacts are closed.

Step 5. Open the contact across the Fuel Leak inputs.

Step 6. Press the Off switch on the front panel and verify that the KDGC-2000 resets to the Ready mode and that all output contacts open.

Step 7. Remove the voltage.

Emergency Stop

Step 1. Apply in parallel 120 Vac to phase A to neutral (terminals 32 and 29), phase B to neutral (terminals 31 and 29), and phase C to neutral (terminals 30 and 29).

Step 2. Press the Run switch on the front panel.

Step 3. Open the contact across the Emergency Stop inputs (terminals 7 and 8).

Step 4. Verify that the KDGC-2000 indicates EMERGENCY SHUTDOWN SWITCH PRESSED and that all output contacts are open.

Step 5. Reapply the contact closure across the Emergency Stop inputs.

Step 6. Press the Off switch on the front panel and verify that the KDGC-2000 resets to the Ready mode and that all output contacts open.

Step 7. Remove the voltage.

Low Coolant Level

Step 1. Apply in parallel 120 Vac to phase A to neutral (terminals 32 and 29), phase B to neutral (terminals 31 and 29), and phase C to neutral (terminals 30 and 29).

Step 2. Press the Run switch on the front panel.

Step 3. Close the Low Coolant Level contact.

Step 4. Verify that the KDGC-2000 indicates LOW COOLANT LEVEL and that the Alarm contact is closed.

Step 5. Open the Low Coolant Level contact.

Step 6. Press the Off switch on the front panel and verify that the KDGC-2000 resets to the Ready mode and that all output contacts open.

Step 7. Remove the voltage.

This completes the Test Procedures.

SECTION 6 • MODBUS™ COMMUNICATIONS

GENERAL

This section describes the Modbus™ communications protocol employed by the KDGC-2000 and how to exchange information with KDGC-2000 over a Modbus™ network. The KDGC-2000 communicates by emulating a subset of the Modicon 984 Programmable Controller. Communications allow the operator to monitor the KDGC-2000 Controller from a remote location or change parameter settings. A rear RS-232 port provides a permanent interface for remote communications.

Interface

The rear panel interface uses a standard RS-232 (DB-9) connector. The communications protocol is compatible with readily available modem/terminal software. The RS-232 communication port supports full duplex operation.

For all communication ports :

- The communications baud rate is fixed at 9600.
- The number of data bits is fixed at 8.
- The parity is fixed at NONE (N).
- The number of stop bits is fixed at 1.

Applications

Rear panel communication port may be used to interface terminals, computers, serial printers, modems, and intermediate communication/control interfaces such as RS-232 serial multiplexors. KDGC-2000 communications protocol supports only the RTU mode.

INTRODUCTION TO MODBUS™ PROTOCOL

Modbus™ communications use a master-slave technique in which only the master can initiate a transaction. This transaction is called a query. When appropriate, a slave (KDGC-2000) responds to the query. When a Modbus™ master communicates with a slave, information is provided or requested by the master.

All supported data can be read and written as specified in the register table. Abbreviations are used in the *Register Table* to indicate the register type. Register types are:

Read/Write = RW
Read only = R
Write only = W

KDGC-2000 MODBUS™ PROTOCOL

When a slave receives a query, the slave responds by either supplying the requested data to the master or performing the requested action. A slave device never initiates communications on the Modbus™, and will always generate a response to the query unless certain error conditions occur. The KDGC-2000 is designed to communicate on the Modbus™ only as a slave device.

A master can only query slaves individually. If a query requests actions unable to be performed by the slave, the slave response message contains an exception response code defining the error detected.

Message Structure

Master initiated queries and KDGC-2000 responses share the same message structure. Each message is comprised of four message fields. They are:

- Device Address
- Function Code
- Data Block
- Error Check field

Device Address Field

The device address field contains the unique Modbus™ address of the slave being queried. The addressed slave repeats the address in the device address field of the response message. This field is 1 byte.

The KDGC-2000 device address can be any value in the Modbus™ protocol device address range (1-247). A query with a device address signifies a broadcast message to all slaves. The KDGC-2000 responds only to preset multiple registers broadcast queries.

Function Code Field

The function code field in the query message defines the action to be taken by the addressed slave. This field is echoed in the response message, and is altered by setting the most significant bit (MSB) of the field to 1 if the response is an error response. This field is 1 byte.

The KDGC-2000 maps all parameters into the Modicon 984 holding register address space (4XXXX) and supports the following function codes.

- Function 03 - read holding registers
- Function 08, subfunction 00 - diagnostics: return query data
- Function 16 - preset multiple registers, non-broadcast and broadcast

The only broadcast query supported by the KDGC-2000 is the preset multiple registers query.

Data Block Field

The query data block contains additional information needed by the slave to perform the requested function. The response data block contains data collected by the slave for the queried function. An error response will substitute an exception response code for the data block. The length of this field varies with each query. See the register holding table for interpretation of the data.

Error Check Field

The error check field provides a method for the slave to validate the integrity of the query message contents and allows the master to confirm the validity of response message contents. This field is 2 bytes.

SERIAL TRANSMISSION DETAILS

A standard Modbus™ network offers two transmission modes for communication: ASCII or remote terminal unit (RTU). The KDGC-2000 supports only the RTU mode.

Each 8-bit byte in a message contains two 4-bit hexadecimal characters. The message is transmitted in a continuous stream with the LSB of each byte of data transmitted first. Transmission of each 8-bit data byte occurs with one start bit and one stop bit. Even parity checking is performed. The transmission baud rate is user-selectable, and can be set at installation and altered during real-time operation. If altered, the new baud rate and/or parity will not be enforced until the response message to the current query has been completed. The KDGC-2000 supported baud rate is 9600.

NOTE

KDGC-2000 supports only RS-232 compatible serial interfaces accessible from the rear panel.

MESSAGE FRAMING AND TIMING CONSIDERATIONS

When receiving a message, the KDGC-2000 allows a maximum inter-byte latency of up to 3.5 to 4.0 character times before considering the message complete.

Once a valid query is received, the KDGC-2000 waits a minimum amount of time before responding. This time delay is set in the remote delay time register (40052). This register contains a value from 1 - 20 representing 10 - 200 milliseconds. The default value is 1 (10 milliseconds). The user may set the remote delay time register to 0 to minimize response latency.

Table 6-1 provides the response message transmission time (in seconds) and 3.5 character times (in milliseconds) for various message lengths and baud rate.

Table 6-1. Timing Considerations

Baud Rate	3.5 Character Time (mSec)	Message Tx Time (Sec.)	
		128 Bytes	256 Bytes
9600	4.0104	0.15	0.29

ERROR HANDLING AND EXCEPTION RESPONSES

Any query received that contains a non-existent device address, a framing error, or CRC error is ignored. No response is transmitted. Queries addressed to a KDGC-2000 with an unsupported function code, unsupported register references, or illegal values in the data block result in an error response message with an exception response code. The exception response codes supported by the KDGC-2000 are provided in Table 6-2.

Table 6-2. Supported Exception Response Codes

Code	Name	Meaning
01	Illegal Function	The query Function/Subfunction Code is unsupported; query read of more than 125 registers; query preset of more than 100 registers; query preset without password clearance.
02	Illegal Data Address	A register referenced in the data block does not support queried read/write; query preset of a subset of a numerical register group.
03	Illegal Data Value	A preset register data block contains an incorrect number of bytes or one or more data values out of range.

COMMUNICATIONS HARDWARE REQUIREMENTS

Section 4, *Installation,* illustrates the IBM PC - AT type serial port connections. When using RS-232 communications, pin 8 to pin 7 and pin 4 to pin 6 are internally connected in the KDGC-2000 to satisfy handshaking requirements.

DETAILED MESSAGE QUERY AND RESPONSE

A detailed description of KDGC-2000 supported message queries and responses is provided in the following paragraphs.

Read Holding Registers Query

This query message requests a register or block of registers to be read. The data block contains the starting register address and the quantity of registers to be read. A register address of N will read holding register N+1.

Device Address
Function Code 03 (hex)
Starting Address Hi
Starting Address Lo
No. of Registers Hi
No. of Registers Lo
CRC error check

The number of registers cannot exceed 125 without causing an error response with the exception code for an illegal function.

Queries to read only or unsupported registers result in an error response with exception code for an illegal data address.

Queries to read without valid logon password clearance result in an error response with exception code of illegal function.

Read Holding Registers Response

The response message contains the data queried. The data block contains the block length in bytes followed by the data for each requested register. For each requested register, there is one Data Hi and one Data Lo. Attempting to read an unused register or a register which does not support a read results in an error response with the exception code for an illegal data address.

Device Address
Function Code 03 (hex)
Byte Count
Data Hi (For each requested register, there is one Data Hi and one Data Lo.)
Data Lo
Data Hi
Data Lo
CRC error check

One-Half Of Slave Response Frame Sent Back to Master (Frame Is Continuous)

Address	Function Code Read Multiple Register	Data Output Register Hi 40112	Data Output Register Lo 40112	Data Output Registers Hi 40113
7dh	03h	00	45h	12h

One-Half Of Slave Response Frame Sent Back to Master (Continuation Of First One-Half)

Data Output Registers Lo 40113	Data Output Registers Hi 40114	Data Output Registers Lo 40114	Checksum Hi	Checksum Lo
55h	21h	45h	nn	nn

Return Query Data

This query contains data to be returned (looped back) in the response. The response and query messages should be identical.

Device Address
Function Code 08 (hex)
Subfunction Hi 00 (hex)
Subfunction Lo 00 (hex)
Data Hi
Data Lo
CRC error check

Return Query

A query message requests a register or block of registers to be written. The data block contains the starting address and the quantity of registers to be written, followed by the Data Block byte count and data. The KDGC-2000 will perform the write when the device address is the same as the KDGC-2000 remote address or when the device address is 0. A device address is 0 for a broadcast query.

A register address of N will write Holding Register N+1.

No data will be written if any of the following exceptions occur.

- Queries to write to Read Only or unsupported registers result in an error response with Exception Code of Illegal Data Address.
- Queries attempting to write more than 100 registers cause an error response with Exception Code Illegal Function.
- An incorrect Byte Count will result in an error response with Exception Code of “Illegal Data Value.
- A query to write which is not preceded by a valid Password Clearance query results in an error response with Exception Code of “Illegal Function.
- There are several instances of registers that are grouped together to collectively represent a single numerical (vs. ASCII string) KDGC-2000 register value (DP, FP, TP). A query to write a subset of such a register group will result in an error response with Exception Code “Illegal Data Address.
- A query to write an illegal value (out of range) to a register results in an error response with Exception Code of “Illegal Data Value.

Device Address
Function Code 10 (hex)
Starting Address Hi
Starting Address Lo
No. of Registers Hi
No. of Registers Lo
Byte Count
Data Hi
Data Lo
.
.
.
Data Hi
Data Lo
CRC Error Check

Return Response

The response message echoes the starting address and the number of registers. There is no response message when the query is broadcast.

Device Address
Function Code 10 (hex)
Starting Address Hi
Starting Address Lo
No. of Registers Hi
No. of Registers Lo
CRC Error Check

Preset Multiple Register Query

A Preset Multiple Register query of Holding Register 40253 (Logon Password) containing the ASCII character string for the KDGC-2000 password grants permission to access the KDGC-2000 parameters until a pre-set multiple register query of holding register 40031 (Logoff) occurs.

The device address is 0 for a broadcast query.

The query starting address must be 0076 and as many as 8 characters (4 registers) can be used for the password. Data containing a password of less than 8 characters must include the string termination character (0). For example, if the password is ABCDEFGH, then the query data block would consist of the following 4 registers:

Query Address	Query Data
0252	AB
0253	CD
0254	EF
0255	GH

However, a password of WXYZ would require the following query data:

Query Address	Query Data
0252	WX
0253	YZ
0254	00

A password of WXY would require the following query data:

Query Address	Query Data
0252	WX
0253	Y0

Data in excess of 8 characters or following the string termination character (0) is ignored.

An error response will result only for the following exception: an incorrect Byte Count will result in an error response with Exception Code of Illegal Data Value.

Device Address
Function Code 10 (hex)
Starting Address Hi 00
Starting Address Lo 252
No. of Registers Hi 00
No. of Registers Lo 01 - 04
Password byte count
Password ASCII character 1
.
.
.
Password ASCII character N
CRC Error Check

Preset Multiple Register Response

The response message echoes the starting address and the number of registers. There is no response message when the query is broadcast.

Device Address
Function Code 10 (hex)
Starting Address Hi 00
Starting Address Lo 252
No. of Registers Hi
No. of Registers Lo
CRC Error Check

CHANGING THE LOGON PASSWORD

The current password can be altered by following a Password Clearance query with a general Preset Multiple Register query with starting address in the Remote Password register group (40252 - 40256). The new password can be up to 8 characters in length, beginning with register 40253. All characters subsequent to the initial 8 are ignored. By choosing a starting address other than 40253, a portion of the existing password can be overwritten to form a new password. The string termination character (0) must be included when altering the length of a password unless the new password is 8 characters long.

For example, to change the password from ABCD to ABC, the query data is:

Register Address	Register Data
0253	C0

To change the password from ABCD to WXYZ, the query data is:

Register Address	Register Data
0252	WX
0253	YZ

Finally, to change the password from ABC to ABCD, the query data can be

Register Address	Register Data
0253	CD
0254	00

or could be

Register Address	Register Data
0252	AB
0253	CD
0254	00

DATA FORMATS

Some KDGC-2000 data must be reformatted for transmission over the Modbus network. Parameters whose values can exceed 9999 but not exceed 99,999,999 are represented in double precision format. Parameters whose values can exceed 99,999,999 must be formatted in triple precision. Single byte data resides in the register least-significant byte with the most-significant byte set to zero. Negative values (single and double precision only) are represented by a sign bit (register MSB) and magnitude.

Double Precision Data Format

Modbus double precision data format uses two consecutive registers to represent a data value. The first register contains the high-order 16 bits of double precision data, and is the actual data value divided by 10,000.

The second register contains the low-order 16 bits of double precision data, and is the actual data value modulus 10,000. The format is:

$$Double\ precision = A(10{,}000) + B$$

Triple Precision Data Format

Modbus triple precision data format uses three consecutive registers (A, B, and X) to represent the magnitude of a data value. The first register contains the high-order 16 bits of triple precision data, and is the magnitude of the actual value divided by 100,000,000. The register MSB is the sign bit. The modulus from this operation is divided by 10,000 to arrive at the value of the second register, and the modulus of this last operation is the value of the third register (the low-order 16 bits of triple precision). The format is:

$$Triple\ precision = A(10{,}000)^2 + B(10{,}000) + X$$

The MSB is the sign bit for triple precision values (0 = positive). Negative values are reported as a sign and a magnitude. Triple precision format allows a maximum value of $9.99X10^{11}$. The maximum range of

several holding registers can exceed this value. If in actual operation, the working value is expected to exceed this value, the floating point data format should be used. These holding registers are marked with an asterisk in the paragraphs for the *Register Table*.

Error Check

This field contains a two-byte CRC value for transmission error detection. The master first calculates the CRC and appends it to the query message. The KDGC-2000 recalculates the CRC value for the received query and performs a comparison to the query CRC value to determine if a transmission error has occurred. If so, no response message is generated. If no transmission error has occurred, the slave calculates a new CRC value for the response message and appends it to the message for transmission.

The CRC calculation is performed using all bytes of the device address, function code and data block fields. A 16-bit CRC-register is initialized to all 1's. Then each eight-bit byte of the message is used in the following algorithm:

First, exclusive-OR the message byte with the low-order byte of the CRC-register. The result, stored in the CRC-register, will then be right-shifted eight times. The CRC-register MSB is zero-filled with each shift. After each shift, the CRC-register LSB is examined. If the LSB IS a 1, the CRC-register is then exclusive-ORed with the fixed polynomial value A001 (hex) prior to the next shift. Once all bytes of the message have undergone the above algorithm, the CRC-register will contain the message CRC value to be placed in the error check field.

Settings Source Register (40081)

Write to this register to select the settings group to be used (Factory, OEM or USER) as the source for retrieving settings and the settings group to be used (OEM or USER only).

Saving Settings Register (40082)

Writing any value to this register causes settings values to be written into the KDGC-2000's non-volatile memory at the settings group specified in the settings source register (OEM or USER only).

MAPPING REGISTERS INTO MODICON ADDRESS SPACE

Conventions

The Data Format column uses the following abbreviations.

DP	Double precision
TP	Triple Precision

Data formatted in double precision uses a two register group designated (a) and (b) and is defined as follows:

Register (a) - two hi-order bytes
Register (b) - two lo-order bytes

Data which are represented in triple precision format use a group of three registers designated (a), (b), and (x).

Register (a) - two hi-order bytes
Register (b) - two mid-order bytes
Register (x) - two lo-order bytes

Other register groups using the (a), (b), etc. designators are an ordered data group of consecutive ASCII characters or data bytes.

Register Table

The KDGC-2000 maps all parameters into the holding register address space (4XXXX).

NOTE
Query address n will access the holding register n+1.

Holding Register	Parameter	Variable's Allowed Range	Read/Write Supported	Data Format	Units
PRODUCT ACCESS INFORMATION					
40252	<Reserved>				
40253	User Ltd Access Password(a)	'A'-'Z', 'a'-'z', '_', '0' - '9'	- W		
40254	User Ltd Access Password(b)		- W		
40255	User Ltd Access Password(c)		- W		
40256	User Ltd Access Password(d)		- W		
40257	<Reserved>				
40006	Front Panel Password(a)	All front panel pushbuttons except for RUN, OFF, AUTO	R -		
40007	Front Panel Password(b)		R -		
40008	Front Panel Password(c)		R -		
40009	Front Panel Password(d)		R -		
40010	<Reserved>				
40011	<Reserved>				
40012	<Reserved>				
40013	<Reserved>				
40014	User Ttl Access Password(a)	'A'-'Z', 'a'-'z', '_', '0'-'9'	- W		
40015	User Ttl Access Password(b)		- W		
40016	User Ttl Access Password(c)		- W		
40017	User Ttl Access Password(d)		- W		
40030	<Reserved>				
40031	Logoff	Data=Don't Care	- W		
40032	<Reserved>				
COMMUNICATION PARAMETERS					
40051	Comm Baud Rate	0	R W	0 =9600	Baud
40052	Remote Delay Time	0-20	R W	0=Min. 1 =10 2 = 20 etc. 20 =200	MilliSec 10
40053	Comm Parity	0-2	R W	0 =None 1 =Odd 2 =Even	
40054	Device Address	1-247	R W		
40055	Modern Time Delay	0-9999	R W		Microseconds
40056	Embedded Code Version No.	100-9999	R -		Version No. x 100
PARAMETER SETTINGS					
40078	Remote (PC) Emergency Stop	0-1	- W	0 =Off 1 = Stop	
40079	Remote Start / Stop	0-1	- W	0 =Stop 1 =Start	
40080	<Reserved>				

Holding Register	Parameter	Variable's Allowed Range	Read/Write Supported	Data Format	Units
40081	Settings Source	0-2	R W	0 =Factory 1 =OEM 2 =User	
40082	Save Settings	Data=Don't Care	- W		
40083	<Reserved>				
SYSTEM PARAMETERS					
40091	Generator Connection	0-2	R W	0=3ph L-L 1=3ph L-N 2=1ph A-B	
40092	NFPA Level	0-2	R W	0 =Off 1 =Level 1 2 =Level 2	
40093	Unit System	0-1	R W	0=English 1=Metric	
40094	Battery Volts	0-1	R W	0=12 VDC 1=24 VDC	
40095	Generator Frequency	0-1	R W	0=50 HZ 1=60 HZ	
40096	Rated Engine RPM	750-3600	R W		RPM
40097	Rated Engine RPM Minimum	750	R -		RPM
40098	Rated Engine RPM Maximum	3600	R -		RPM
40099	Rated Engine RPM Stepsize	50	R -		RPM
40100	Number Flywheel Teeth	50-500	R W		
40101	Number Flywheel Teeth Minimum	50	R -		
40102	Number Flywheel Teeth Maximum	500	R -		
40103	Number Flywheel Teeth Stepsize	1	R -		
40104	Genset KW Rating	25-9999	R W		KWatt
40105	Genset KW Rating Minimum	25	R -		KWatt
40106	Genset KW Rating Maximum	9999	R -		KWatt
40107	Genset KW Rating Stepsize	1	R -		KWatt
40108	No Load Cool Down Time	0-60	R W		Minutes
40109	No Load Cool Down Time Minimum	0	R -		Minutes
40110	No Load Cool Down Time Maximum	60	R -		Minutes
40111	No Load Cool Down Time Stepsize	5	R -		Minutes
40112	Alternator Frequency Rated	100-900	R W		Hertz
40113	Alternator Frequency Rated Minimum	100	R -		Hertz
40114	Alternator Frequency Rated Maximum	900	R -		Hertz
40115	Alternator Frequency Rated Stepsize	1	R -		Hertz
GENERATOR PT PRIMARY					
40121	Voltage(a)	1-15000	R W	DP	VoltsAC x 10000
40122	Voltage(b)		R W	DP	VoltsAC
40123	Voltage Minimum(a)	1	R -	DP	VoltsAC x 10000
40124	Voltage Minimum(b)		R -	DP	VoltsAC

Holding Register	Parameter	Variable's Allowed Range	Read/Write Supported	Data Format	Units
40125	Voltage Maximum(a)	15000	R -	DP	VoltsAC x 10000
40126	Voltage Maximum(b)		R -	DP	VoltsAC
40127	Voltage Stepsize(a)	1	R -	DP	VoltsAC x 10000
40128	Voltage Stepsize(b)		R -	DP	VoltsAC
GENERATOR PT SECONDARY					
40129	Voltage	1-480	R W		VoltsAC
40130	Voltage Minimum	1	R -		VoltsAC
40131	Voltage Maximum	480	R -		VoltsAC
40132	Voltage Stepsize	1	R -		VoltsAC
GENERATOR CT PRIMARY					
40133	Current	1-5000	R W		AmpsAC
40134	Current Minimum	1	R -		AmpsAC
40135	Current Maximum	5000	R -		AmpsAC
40136	Current Stepsize	1	R -		AmpsAC
BUS PT PRIMARY					
40141	Voltage(a)	1-15000	R W	DP	VoltsAC x 10000
40142	Voltage(b)		R W	DP	VoltsAC
40143	Voltage Minimum(a)	1	R -	DP	VoltsAC x 10000
40144	Voltage Minimum(b)		R -	DP	VoltsAC
40145	Voltage Maximum(a)	15000	R -	DP	VoltsAC x 10000
40146	Voltage Maximum(b)		R -	DP	VoltsAC
40147	Voltage Stepsize(a)	1	R -	DP	VoltsAC x 10000
40148	Voltage Stepsize(b)		R -	DP	VoltsAC
BUS PT SECONDARY					
40149	Voltage	1-480	R W		VoltsAC
40150	Voltage Minimum	1	R -		VoltsAC
40151	Voltage Maximum	480	R -		VoltsAC
40152	Voltage Stepsize	1	R -		VoltsAC
LOW FUEL PRE-ALARM					
40181	Enable	0-1	R W	0 =Off 1 =On	
40182	Threshold	10-100	R W		% Full Tank
40183	Minimum	10	R -		% Full Tank
40184	Maximum	100	R -		% Full Tank
40185	Stepsize	1	R -		% Full Tank
LOW COOL TEMP PRE-ALARM					
40186	Enable	0-1	R W	0 =Off 1 =On	
40187	Threshold	40-100	R W		DegF
40188	Minimum	40	R -		DegF
40189	Maximum	100	R -		DegF
40190	Stepsize	1	R -		DegF
BATTERY OVERVOLTAGE PRE-ALARM					

Holding Register	Parameter	Variable's Allowed Range	Read/Write Supported	Data Format	Units
40191	Enable	0-1	R W	0 =Off 1 =On	
40192	Threshold	140-160 (12V) 240-320 (24V)	R W		.1 VoltDC
40193	Minimum	140 / 240	R -		.1 VoltDC
40194	Maximum	160 / 320	R -		.1 VoltDC
40195	Stepsize	1	R -		.1 VoltDC
MAINTENANCE INTERVAL PRE-ALARM					
40196	Enable	0-1	R W	0 =Off 1 =On	
40197	Threshold	0-5000	R W		Hours
40198	Minimum	0	R -		Hours
40199	Maximum	5000	R -		Hours
40200	Stepsize	10	R -		Hours
ENGINE KW OVERLOAD PRE-ALARM					
40201	Enable	0-1	R W	0 =Off 1 =On	
40202	Threshold	95-140	R W		% of Rated
40203	Minimum	95	R -		% of Rated
40204	Maximum	140	R -		% of Rated
40205	Stepsize	1	R -		% of Rated
HIGH COOLANT TEMPERATURE PRE-ALARM					
40206	Enable	0-1	R W	0 =Off 1 =On	
40207	Threshold	100-280	R W		DegF
40208	Minimum	100	R -		DegF
40209	Maximum	280	R -		DegF
40210	Stepsize	1	R -		DegF
LOW OIL PRESSURE PRE-ALARM					
40211	Enable	0-1	R W	0 =Off 1 =On	
40212	Threshold	3-100	R W		PSI
40213	Minimum	3	R -		PSI
40214	Maximum	100	R -		PSI
40215	Stepsize	1	R -		PSI
LOW BATTERY VOLTAGE PRE-ALARM					
40216	Enable	0-1	R W	0 =Off 1 =On	
40217	Threshold	60-120 (12V) 120-240 (24V)	R W		.1 VoltDC
40218	Minimum	60 / 120	R -		.1 VoltDC
40219	Maximum	120 / 240	R -		.1 VoltDC
40220	Stepsize	1 (0.1 VDC)	R -		.1 VoltDC
40221	Pre-alarm Activation Time Delay	1-10	R W		Seconds
40222	Activation Time Delay Minimum	1	R -		Seconds

Holding Register	Parameter	Variable's Allowed Range	Read/Write Supported	Data Format	Units
40223	Activation Time Delay Maximum	10	R -		Seconds
40224	Activation Time Delay Stepsize	1	R -		Seconds
WEAK BATTERY VOLTAGE PRE-ALARM					
40225	Enable	0-1	R W	0 =Off 1 =On	
40226	Threshold	40-80 (12V) 80-160 (24V)	R W		.1 VoltDC
40227	Minimum	40 / 80	R -		.1 VoltDC
40228	Maximum	80 / 160	R -		.1 VoltDC
40229	Stepsize	1 (0.1 VoltDC)	R -		.1 VoltDC
40230	Pre-alarm Activation Time Delay	1-10	R W		Seconds
40231	Activation Time Delay Minimum	1	R -		Seconds
40232	Activation Time Delay Maximum	10	R -		Seconds
40233	Activation Time Delay Stepsize	1	R -		Seconds
LOGON PASSWORD (40252-7)					
HIGH COOLANT TEMPERATURE ALARM					
40281	Enable	0-1	R W	0 =Off 1 =On	
40282	Shutdown Enable	0-1	R W	0 =Off 1 =On	
40283	Threshold	100-280	R W		DegF
40284	Minimum	100	R -		DegF
40285	Maximum	280	R -		DegF
40286	Stepsize	1	R -		DegF
40287	Arming Delay after Crank Disconnect	60	R W		Seconds
40288	Arming Delay Minimum	60	R -		Seconds
40289	Arming Delay Maximum	60	R -		Seconds
40290	Arming Delay Stepsize	0	R -		Seconds
LOW OIL PRESSURE ALARM					
40291	Enable	0-1	R W	0 =Off 1 =On	
40292	Shutdown Enable	0-1	R W	0 =Off 1 =On	
40293	Threshold	3-100	R W		PSI
40294	Minimum	3	R -		PSI
40295	Maximum	100	R -		PSI
40296	Stepsize	1	R -		PSI
40297	Arming Delay after Crank Disconnect	5-15	R W		Seconds
40298	Arming Delay Minimum	5	R -		Seconds
40299	Arming Delay Maximum	15	R -		Seconds

Holding Register	Parameter	Variable's Allowed Range	Read/Write Supported	Data Format	Units
40300	Arming Delay Stepsize	1	R -		Seconds
OVERSPEED ALARM					
40301	Enable	0-1	R W	0 =Off 1 =On	
40302	Shutdown Enable	0-1	R W	0 =Off 1 =On	
40303	Threshold	105-140	R W		% of Rated
40304	Minimum	105	R -		% of Rated
40305	Maximum	140	R -		% of Rated
40306	Stepsize	1	R -		% of Rated
40307	Alarm Activation Time Delay	0-500	R W		MilliSec
40308	Activation Time Delay Minimum	0	R -		MilliSec
40309	Activation Time Delay Maximum	500	R -		MilliSec
40310	Activation Time Delay Stepsize	10	R -		MilliSec
SENDER FAIL ALARMS					
40311	Coolant Temperature Sender Failure Alarm Enable	0-1	R W	0 =Off 1 =On	
40312	Oil Pressure Sender Failure Alarm Enable	0-1	R W	0 =Off 1 =On	
40314	Magnetic Pick-up Failure Alarm Enable	0-1	R W	0 =Off 1 =On	
40315	Loss of Generator Voltage Alarm Enable	0-1	R W	0 =Off 1 =On	
40316	Pre-alarm Buzzer Enable	0-1	R W	0 =Off 1 =On	
40317	Battery Charger Failure Pre-alarm Enable	0-1	R W	0 =Off 1 =On	
40318	Global Sender Failure Alarm Time Delay	1-10	R W		Seconds
40319	Coolant Temperature Sender Failure Alarm Activation Delay	5-30 (increment size of 5)	R W		Minutes
CRANKING PARAMETERS					
40351	Cranking Style	0-1	R W	0=Contin. 1=Cycle	
40352	Number of Crank Cycles	1-7	R W		
40353	Number of Crank Cycles Minimum	1	R -		
40354	Number of Crank Cycles Maximum	7	R -		
40355	Number of Crank Cycles Stepsize	1	R -		
40356	Cycle Crank Time	5-15	R W		Seconds
40357	Cycle Crank Time Minimum	5	R -		Seconds
40358	Cycle Crank Time Maximum	15	R -		Seconds
40359	Cycle Crank Time Stepsize	1	R -		Seconds
40360	Continuous Crank Time	1-60	R W		Seconds

Holding Register	Parameter	Variable's Allowed Range	Read/Write Supported	Data Format	Units
40361	Continuous Crank Time Minimum	1	R -		Seconds
40362	Continuous Crank Time Maximum	60	R -		Seconds
40363	Continuous Crank Time Stepsize	1	R -		Seconds
40364	Crank Disconnect Limit	10-100	R W		% of Rated
40365	Crank Disconnect Limit Minimum	10	R -		% of Rated
40366	Crank Disconnect Limit Maximum	100	R -		% of Rated
40367	Crank Disconnect Limit Stepsize	1	R -		% of Rated
40368	Pre-crank Delay	0-30	R W		Seconds
40369	Pre-crank Delay Minimum	0	R -		Seconds
40370	Pre-crank Delay Maximum	30	R -		Seconds
40371	Pre-crank Delay Stepsize	1	R -		Seconds
40372	Pre-crank Contact after Disconnect	0-1	R W	0=Open 1=Closed	
SYSTEM MONITOR					
40374	Remaining Cooldown Time	0-60	R -		Minutes
40375	<Reserved>				
40376	Active Speed Signal Sources	1-4	R -	1 =MPU 2 =ALT 3 =GEN 4 =NONE	
40377	Sender Failure Alarm Codes		R -	b0=Cool Temp b1=Oil Press b2 Reserved b3=Spd Signal b4=Gen Volt b5-b7 Not Used	
40378	Alarm Codes		R -	b0=Hi Cool Temp b1 Low Coolant Level b2=Fuel Leak b3=E-Stop b4=Sender Fail b5=Over-crank b6=Over-speed b7=Low Oil Press	
40379	Pre-Alarm Codes		R -	b0=Hi Cool Temp b1=Low Cool Temp b2=Weak Batt b3=Low Batt b4 =Batt ov b5=Charger Fail b6=Service Due b7=kW Overload	

Holding Register	Parameter	Variable's Allowed Range	Read/Write Supported	Data Format	Units
40380	Pre-Alarm Codes, Group 2		R -	b0=Low Oil Press b1=Low Fuel b2 Reserved b3 Reserved b4-b7 Not Used	
40381	Engine Coolant Temperature		R -		DegF
40382	Engine Oil Pressure		R -		PSI
40383	Battery Voltage		R -		.1 VoltDC
40384	Fuel Level		R -		% Full Tank
40385	Time Remaining until Maintenance		R -		Hours
40386	Accumulated Engine Runtime(a)		R -	DP	Minutes x 10000
40387	Accumulated Engine Runtime(b)		R -	DP	Minutes
40388	Accumulated Engine Runtime Warranty(a)		R W	DP	Minutes x 10000
40389	Accumulated Engine Runtime Warranty(b)		R W	DP	Minutes
40390	Engine Speed(a)		R -	DP	RPM x 10000
40391	Engine Speed(b)		R -	DP	RPM
40392	Engine Load(a)		R -	DP	%
40393	Engine Load(b)		R -	DP	%
GENERATOR MONITOR					
40394	Phase a-b RMS Voltage(a)		R -	DP	RMS Volt x10000
40395	Phase a-b RMS Voltage(b)		R -	DP	RMS Volt
40396	Phase b-c RMS Voltage(a)		R -	DP	RMS Volt x10000
40397	Phase b-c RMS Voltage(b)		R -	DP	RMS Volt
40398	Phase c-a RMS Voltage(a)		R -	DP	RMS Volt x10000
40399	Phase c-a RMS Voltage(b)		R -	DP	RMS Volt
40400	Phase a-n RMS Voltage(a)		R -	DP	RMS Volt x10000
40401	Phase a-n RMS Voltage(b)		R -	DP	RMS Volt
40402	Phase b-n RMS Voltage(a)		R -	DP	RMS Volt x10000
40403	Phase b-n RMS Voltage(b)		R -	DP	RMS Volt
40404	Phase c-n RMS Voltage(a)		R -	DP	RMS Volt x10000
40405	Phase c-n RMS Voltage(b)		R -	DP	RMS Volt
40406	Bus RMS Voltage(a)		R -	DP	RMS Volt x10000
40407	Bus RMS Voltage(b)		R -	DP	RMS Volt
40408	Phase a RMS Current		R -		RMS Amps
40409	Phase b RMS Current		R -		RMS Amps
40410	Phase c RMS Current		R -		RMS Amps
40411	Phase a Apparent Power(a)		R -	DP	KVA x 10000
40412	Phase a Apparent Power(b)		R -	DP	KVA
40413	Phase b Apparent Power(a)		R -	DP	KVA x 10000
40414	Phase b Apparent Power(b)		R -	DP	KVA
40415	Phase c Apparent Power(a)		R -	DP	KVA x 10000
40416	Phase c Apparent Power(b)		R -	DP	KVA
40417	3 Phase Apparent Power(a)		R -	DP	KVA x 10000
40418	3 Phase Apparent Power(b)		R -	DP	KVA
40419	Phase a Power(a)		R -	DP	KWatt x 10000

Holding Register	Parameter	Variable's Allowed Range	Read/Write Supported	Data Format	Units
40420	Phase a Power(b)		R -	DP	KWatt
40421	Phase b Power(a)		R -	DP	KWatt x 10000
40422	Phase b Power(b)		R -	DP	KWatt
40423	Phase c Power(a)		R -	DP	KWatt x 10000
40424	Phase c Power(b)		R -	DP	KWatt
40425	3 Phase power(a)		R -	DP	KWatt x 10000
40426	3 Phase power(b)		R -	DP	KWatt
40427	3 Phase Total KW-Hours(a)		R W	TP	KWH x 10000 x 1000
40428	3 Phase Total KW-Hours(b)		R W	TP	KWH x 10000
40429	3 Phase Total KW-Hours(x)		R W	TP	KWH
40430	Power Factor		R -		.01
40431	<Reserved>				
40432	<Reserved>				
40433	Generator Frequency		R -		.1 Hertz
40434	Bus Frequency		R -		.1 Hertz
40435	<Reserved>				
40436	<Reserved>				
40437	<Reserved>				
CONTIGUOUS WRITE BLOCK (REGROUPED PARAMETERS)					
40441	Generator Connection	0-2	R W	0=3ph L-L 1=3ph L-N 2=1ph A-B	
40442	NFPA Level	0-2	R W		
40443	Unit System	0-1	R W	0=English 1=Metric	
40444	Nominal Battery Voltage	0-1	R W	0=12 VDC 1=24 VDC	
40445	Generator Frequency	0-1	R W	0=50 HZ 1=60 HZ	
40446	Rated Engine RPM	750-3600	R W		RPM
40447	Number Flywheel Teeth	50-500	R W		
40448	Genset KW Rating	25-9999	R W		KWatt
40449	No Load Cool Down Time	0-60	R W		Minutes
40450	Alternator Frequency Rated	100-900	R W		Hertz
40451	Generator Speed Mode	Individual Bits are 0 or 1	R W		Active Speed Signals b0=mag pick-up b1=generator b2=chg. alt. Gen. Phase Rotation b4=0 for A-B-C b4=1 for A-C-B Maintenance Timer b5=0 is active b5=1 to reset
GENERATOR PT PRIMARY					
40452	Voltage(a)	1-15000	R W	DP	VoltsAC x 10000
40453	Voltage(b)		R W	DP	VoltsAC

Holding Register	Parameter	Variable's Allowed Range	Read/Write Supported	Data Format	Units
GENERATOR PT SECONDARY					
40454	Voltage	1-480	R W		VoltsAC
GENERATOR CT PRIMARY					
40455	Current	1-5000	R W		AmpsAC
40456	<Reserved>				
BUS PT PRIMARY					
40457	Voltage(a)	1-15000	R W	DP	VoltsAC x 10000
40458	Voltage(b)		R W	DP	VoltsAC
BUS PT SECONDARY					
40459	Voltage	1-480	R W		VoltsAC
LOW FUEL PRE-ALARM					
40460	Enable	0-1	R W	0 =Off 1 =On	
40461	Threshold	10-100	R W		% Full Tank
LOW COOL TEMP PRE-ALARM					
40462	Enable	0-1	R W	0 =Off 1 =On	
40463	Threshold	40-100	R W		DegF
BATTERY OVERVOLTAGE PRE-ALARM					
40464	Enable	0-1	R W	0 =Off 1 =On	
40465	Threshold	140-160 (12V) 240-320 (24V)	R W		.1 VoltDC
MAINTENANCE INTERVAL PRE-ALARM					
40466	Enable	0-1	R W	0 =Off 1 =On	
40467	Threshold	0-5000	R W		Hours
ENGINE KW OVERLOAD PRE-ALARM					
40468	Enable	0-1	R W	0 =Off 1 =On	
40469	Threshold	95-140	R W		% of Rated
HIGH COOLANT TEMPERATURE PRE-ALARM					
40470	Enable	0-1	R W	0 =Off 1 =On	
40471	Threshold	100-280	R W		DegF
LOW OIL PRESSURE PRE-ALARM					
40472	Enable	0-1	R W	0 =Off 1 =On	
40473	Threshold	3-100	R W		PSI
LOW BATTERY VOLTAGE PRE-ALARM					
40474	Enable	0-1	R W	0 =Off 1 =On	
40475	Threshold	60-120 (12V) 120-240 (24V)	R W		.1 VoltDC
40476	Pre-alarm Activation Time Delay	1-10	R W		Seconds

Holding Register	Parameter	Variable's Allowed Range	Read/Write Supported	Data Format	Units
WEAK BATTERY VOLTAGE PRE-ALARM					
40477	Enable	0-1	R W	0 =Off 1 =On	
40478	Threshold	40-80 (12V) 80-160 (24V)	R W		.1 VoltDC
40479	Pre-alarm Activation Time Delay	1-10	R W		Seconds
HIGH COOLANT TEMPERATURE ALARM					
40480	Enable	0-1	R W	0 =Off 1 =On	
40481	Shutdown Enable	0-1	R W	0 =Off 1 =On	
40482	Threshold	100-280	R W		DegF
40483	Arming Delay after Crank Disconnect	60	R W		Seconds
LOW OIL PRESSURE ALARM					
40484	Enable	0-1	R W	0 =Off 1 =On	
40485	Shutdown Enable	0-1	R W	0 =Off 1 =On	
40486	Threshold	3-100	R W		PSI
40487	Arming Delay after Crank Disconnect	5-15	R W		Seconds
OVERSPEED ALARM					
40488	Enable	0-1	R W	0 =Off 1 =On	
40489	Shutdown Enable	0-1	R W	0 =Off 1 =On	
40490	Threshold	105-140	R W		% of Rated
40491	Alarm Activation Time Delay	0-500	R W		MilliSec
SENDER FAIL ALARMS					
40492	Coolant Temperature Sender Failure Alarm Enable	0-1	R W	0 =Off 1 =On	
40493	Oil Pressure Sender Failure Alarm Enable	0-1	R W	0 =Off 1 =On	
40495	Magnetic Pick-up Failure Alarm Enable	0-1	R W	0 =Off 1 =On	
40496	Loss of Generator Voltage Alarm Enable	0-1	R W	0 =Off 1 =On	
40497	Pre-alarm Buzzer Enable	0-1	R W	0 =Off 1 =On	
40498	Battery Charger Failure Pre-alarm Enable	0-1	R W	0 =Off 1 =On	
40499	Global Sender Failure Alarm Time Delay	0-10	R W		Seconds
CRANKING PARAMETERS					
40500	Cranking Style	0-1	R W	0=Contin. 1=Cycle	
40501	Number of Crank Cycles	1-7	R W		
40502	Cycle Crank Time	5-15	R W		Seconds
40503	Continuous Crank Time	1-60	R W		Seconds
40504	Crank Disconnect Limit	10-100	R W		% of Rated
40505	Pre-crank Delay	0-30	R W		Seconds
40506	Pre-crank Contact after Disconnect	0-1	R W	0=Open 1=Closed	

Holding Register	Parameter	Variable's Allowed Range	Read/Write Supported	Data Format	Units
SYSTEM MONITOR					
40507	Accumulated Engine Runtime Warranty(a)		R W	DP	Minutes x 10000
40508	Accumulated Engine Runtime Warranty(b)		R W	DP	Minutes
CALIBRATION					
40509	Voltage Calibration A(a)		R W	DP	x 10000
40510	Voltage Calibration A(b)		R W	DP	x 1
40511	Voltage Calibration B(a)		R W	DP	x 10000
40512	Voltage Calibration B(b)		R W	DP	x 1
40513	Voltage Calibration C(a)		R W	DP	x 10000
40514	Voltage Calibration C(b)		R W	DP	x 1
40515	Voltage Calibration N(a)		R W	DP	x 10000
40516	Voltage Calibration N(b)		R W	DP	x 1
40517	Current Calibration A(a)		R W	DP	x 10000
40518	Current Calibration A(b)		R W	DP	x 1
40519	Current Calibration B(a)		R W	DP	x 10000
40520	Current Calibration B(b)		R W	DP	x 1
40521	Current Calibration C(a)		R W	DP	x 10000
40522	Current Calibration C(b)		R W	DP	x 1
40523	Current Calibration N(a)		R W	DP	x 10000
40524	Current Calibration N(b)		R W	DP	x 1
40525	Coolant Temperature 0(a)		R W	DP	x 10000
40526	Coolant Temperature 0(b)		R W	DP	x 1
40527	Coolant Temperature 1(a)		R W	DP	x 10000
40528	Coolant Temperature 1(b)		R W	DP	x 1
40529	Coolant Temperature 2(a)		R W	DP	x 10000
40530	Coolant Temperature 2(b)		R W	DP	x 1
40531	Coolant Temperature 3(a)		R W	DP	x 10000
40532	Coolant Temperature 3(b)		R W	DP	x 1
40533	Coolant Temperature 4(a)		R W	DP	x 10000
40534	Coolant Temperature 4(b)		R W	DP	x 1
40535	Coolant Temperature 5(a)		R W	DP	x 10000
40536	Coolant Temperature 5(b)		R W	DP	x 1
40537	Coolant Temperature 6(a)		R W	DP	x 10000
40538	Coolant Temperature 6(b)		R W	DP	x 1
40539	Coolant Temperature 7(a)		R W	DP	x 10000
40540	Coolant Temperature 7(b)		R W	DP	x 1
40541	Coolant Temperature 8(a)		R W	DP	x 10000
40542	Coolant Temperature 8(b)		R W	DP	x 1
40543	Coolant Temperature 9(a)		R W	DP	x 10000
40544	Coolant Temperature 9(b)		R W	DP	x 1
40545	Coolant Temperature 10(a)		R W	DP	x 10000
40546	Coolant Temperature 10(b)		R W	DP	x 1
40547	Coolant Temperature 11(a)		R W	DP	x 10000
40548	Coolant Temperature 11(b)		R W	DP	x 1
40549	Coolant Temperature 12(a)		R W	DP	x 10000
40550	Coolant Temperature 12(b)		R W	DP	x 1
40551	Coolant Temperature 13(a)		R W	DP	x 10000
40552	Coolant Temperature 13(b)		R W	DP	x 1

Holding Register	Parameter	Variable's Allowed Range	Read/Write Supported	Data Format	Units
40553	Oil Pressure 0(a)		R W	DP	x 10000
40554	Oil Pressure 0(b)		R W	DP	x 1
40555	Oil Pressure 1(a)		R W	DP	x 10000
40556	Oil Pressure 1(b)		R W	DP	x 1
40557	Oil Pressure 2(a)		R W	DP	x 10000
40558	Oil Pressure 2(b)		R W	DP	x 1
40559	Oil Pressure 3(a)		R W	DP	x 10000
40560	Oil Pressure 3(b)		R W	DP	x 1
40561	Oil Pressure 4(a)		R W	DP	x 10000
40562	Oil Pressure 4(b)		R W	DP	x 1
40563	Oil Pressure 5(a)		R W	DP	x 10000
40564	Oil Pressure 5(b)		R W	DP	x 1
40565	Oil Pressure 6(a)		R W	DP	x 10000
40566	Oil Pressure 6(b)		R W	DP	x 1
40567	Oil Pressure 7(a)		R W	DP	x 10000
40568	Oil Pressure 7(b)		R W	DP	x 1
40569	Oil Pressure 8(a)		R W	DP	x 10000
40570	Oil Pressure 8(b)		R W	DP	x 1
40571	Oil Pressure 9(a)		R W	DP	x 10000
40572	Oil Pressure 9(b)		R W	DP	x 1
40573	Oil Pressure 10(a)		R W	DP	x 10000
40574	Oil Pressure 10(b)		R W	DP	x 1
40575	Oil Pressure 11(a)		R W	DP	x 10000
40576	Oil Pressure 11(b)		R W	DP	x 1
40577	Oil Pressure 12(a)		R W	DP	x 10000
40578	Oil Pressure 12(b)		R W	DP	x 1
40579	Oil Pressure 13(a)		R W	DP	x 10000
40580	Oil Pressure 13(b)		R W	DP	x 1
SYSTEM MONITOR - Continuation					
40581	System Configuration	32, 64, 128	R W	32=AUTO 64=OFF 128=RUN	
40582	System State	0-5	R -	0=RESET 1=READY 2=CRANK 3=REST 4=RUN 5=ALARM	
CALIBRATION - Continuation					
40583	Phase angle (a)		R W	DP	
40584	Phase angle (b)		R W	DP	
GENERATOR MONITOR - Continuation					

Holding Register	Parameter	Variable's Allowed Range	Read/Write Supported	Data Format	Units
40585	Power Factor State	0-3	R	0=+LAG 1=-LEAD 2=-LAG 3=+LEAD	

Katolight Service - Master Repair Manual - Page 2030

SECTION 7 • KDGC-2000 WINDOWS® SOFTWARE

GENERAL

KDGC-2000 Windows® Software is an application that enhances communication between the personal computer (PC) user and the KDGC-2000. KDGC-2000 Windows® Software serves two main purposes. First, it provides a user friendly environment for changing KDGC-2000 settings. Second, it provides on-screen, real time metering that is updated approximately every one and one-half seconds. The interface software also allows users to save the current setting configurations and data information to a disk. Users can save multiple setups for later use which saves setup time when configuring multiple units. Without KDGC-2000 Windows® Software, users must be familiar with the limited function operations at the KDGC-2000 front panel.

INSTALLATION

KDGC 2000 Windows software contains a setup utility that installs the program on your PC. When it installs the program, an uninstall icon is created that you may use to uninstall (remove) the program from your PC. The minimum operating requirements are listed in the following paragraph.

Operating Requirements

To use KDGC-2000 Windows software, you will need the following:

- IBM compatible PC, 486DX2 or faster, and a minimum of four megabytes of RAM
- Microsoft Windows 95 or Windows 3.1
- 3.5 inch floppy drive
- RS-232 Serial port

Installing The Program On Your PC With Windows® 95

1. Insert disk 1 in the 3.5 inch floppy drive
2. From the Task Bar select **Start** then **Run**
3. Enter **a:\Setup.exe** and press enter or click on Browse and select the A: drive and double click **Setup.exe**.

Installing The Program On Your PC With Windows® 3.1

1. Insert disk 1 in the 3.5 inch floppy drive
2. From Program Manager select **File** menu and then **Run**
3. Enter **a:\Setup.exe** and press enter or select the A: drive and double click **Setup.exe**.

Configuring The System

Communication with a KDGC-2000 unit can be done by a direct cable connection or through a modem. The installation section of the manual has the RS-232 serial link connection pinouts. For direct connection use a standard RS-232 cable. For modem communications connection use a modem to the KDGC RS-232 port and a null-modem cable. Connect another modem to the host computer with a standard RS-232 cable.

INITIALIZING COMMUNICATIONS WITH THE KDGC 2000 Windows Software

Select the KDGC-2000 icon from Program Manger or select KDGC 2000 under the Katolight directory under Programs in the Start Menu. A momentary dialog box (splash screen) opens that displays the Katolight Logo, program name, and revision identification. After the splash screen the initial screen

(Figure 7-1) will follow. Pull down the **Communications** menu select **Open** and then either **RS232** or **Modem** depending on the communication type desired. This will open the Comm Port screen like the one shown in Figure 7-2.

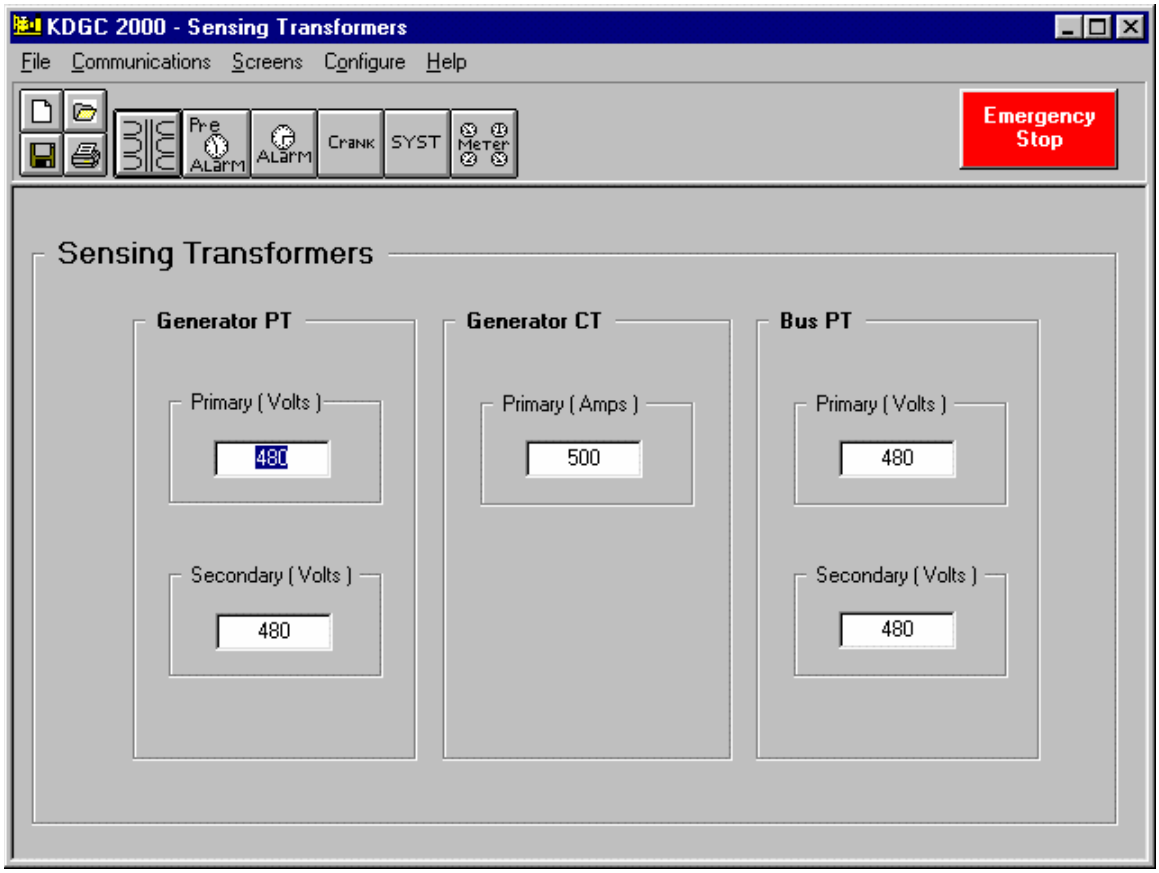

Figure 7-1. Initial Screen

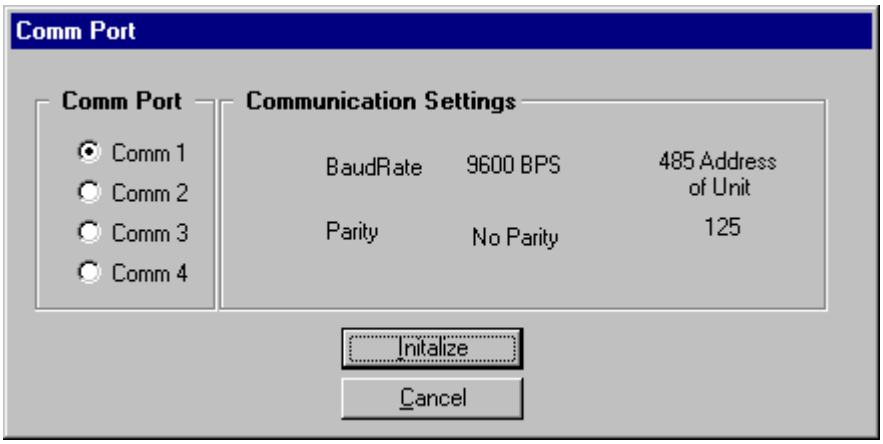

Figure 7-2. Comm Port

This screen shows the currently selected communication parameters if these are correct select the comm port and press the **Initialize** button. If the port is available the Logon Password screen (Figure 7-3) will appear. Type in your password and press OK. If you press Cancel the comm port will be closed and you will have to initialize communications again. If the communication parameter shown on the Comm Port screen are incorrect see the Section on changing the programs communication parameters.



Figure 7-3. Password

(Note : The Full Access password is “KATOLITE” Passwords are case sensitive.)

If modem connection was selected after your press initialize the Phone Book screen (Figure 7-4) will appear. From here you can select the name of the unit you want to call. You can also add or delete items in the phone book. After making a selection press the Dial Number button and the modem will dial the select number. After the modem’s connect the Logon Password screen (Figure 7-3) will appear. Type in your password and press OK.

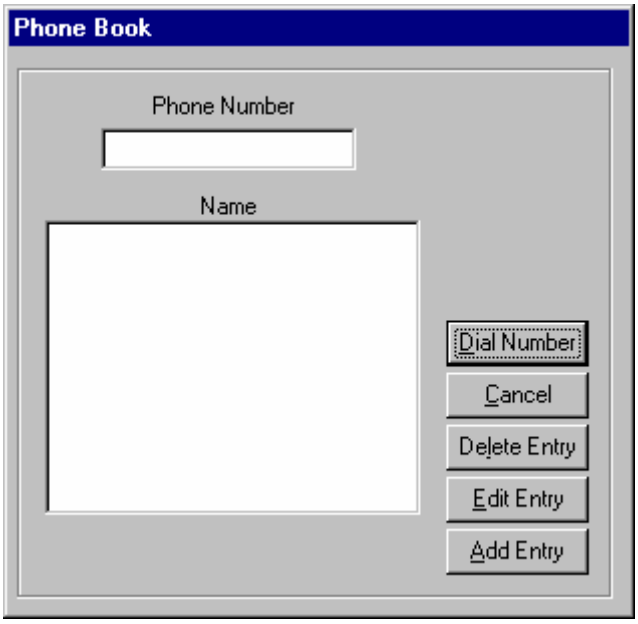

Figure 7-4. Phone Book

CHANGING THE PROGRAMS COMMUNICATION PARAMETERS

The communications parameter can be changed both when you are logged onto a KDGC unit and when you are not logged on. To change the communications parameters, pull down the **Configure** menu and select **RS232** this will bring up the screen shown in Figure 7-5. When you are logged onto a unit and change a parameter, by selecting **Save** you are saving the changes both to the PC and to the KDGC unit. When not logged on the parameters are only saved to the PC. (Note : To change the communications parameters in the KDGC you **must** be logged on with the full access password.)

The Modem Time Delay parameter is only available if you are changing the parameters while logged onto a unit. This parameter allows the user to extend the standard 3.5 millisecond “no character” timeout (for Modbus) by as much as 10 milliseconds (9999). This extra time is used to compensate for the extra time delays that the modem adds.

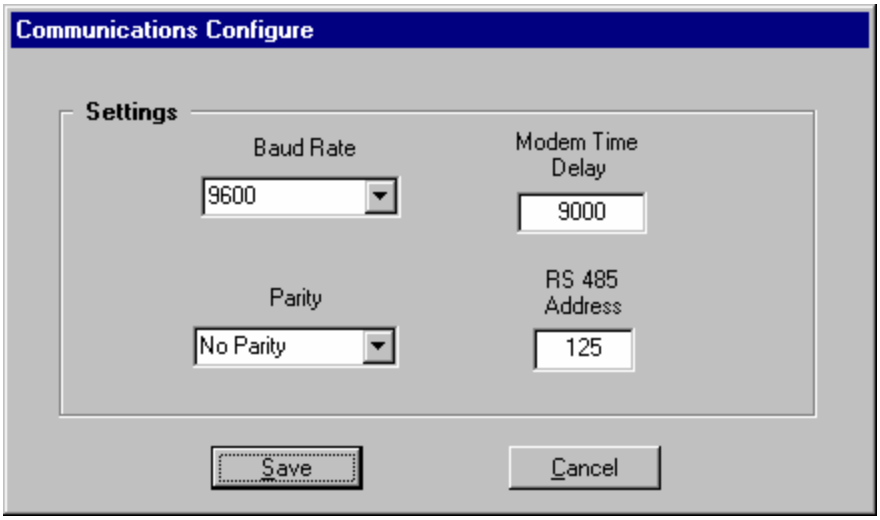

Figure 7-5. Communications Configure Screen

CHANGING LOGON PASSWORDS

To change Logon passwords you must be currently logged onto a KDGC unit. Pull down the **Communication** menu and select **Change Password.** When this is done the Change Password (Figure 7-6) screen will appear. There are two option buttons on the top off the screen. Select the level of the password you wish to change. Note : If you logged in with the limited access password you are only allowed to change the limited access password. Enter the new password in the first text box and repeat it again in the bottom text box. After entering the new password press the OK button, if both passwords you entered match, the new password will be sent to the KDGC. (Note : Passwords are case sensitive)



Figure 7-6. Change Password

REMOTE START AND STOP OF GENERATOR

The KDGC must be in Auto for this function to be enabled. When selected the screen in Figure 7-7 is displayed. To start the generator press the start button, this brings up the screen in Figure 7-8 which shows the status of the start operation. The start operation can be canceled by pressing the **Cancel** button. After the starting process is complete the Remote Starting screen will come back up. To exit press the **Cancel** button. To stop the generator press the **Stop** button. If successful a message box will be displayed.



Figure 7-7. Remote Starting

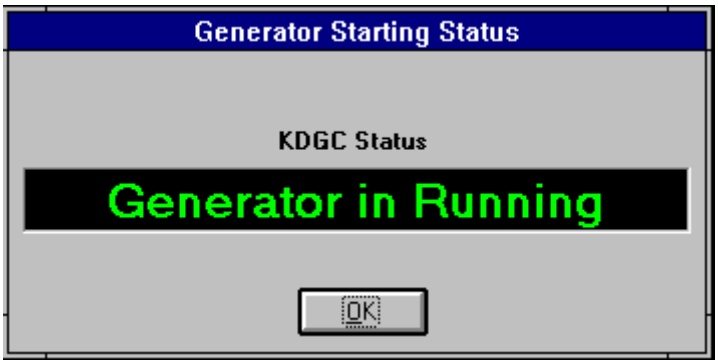

Figure 7-8. Starting Status

CHANGING SETTINGS

Settings are arranged in five groups.

- Sensing Transformers
- Pre-Alarms
- Alarm
- Crank
- System

To change settings, you must first select the screen associated with the setting. When you are logged on with the limited access password you can see all of the current settings in the unit but cannot change all of them. The settings that can not be changed will be disabled so that you can not select them. Double clicking on any white rectangular box will allow you to change (if allowed) that setting. Once all of the settings have been entered, pull down the **Communications** menu and select **Send to KDGC,** this will send the settings to the KDGC and verify them.

MENUS

File Menu

1) **Open** - Opens a saved settings file from a disk.

2) **Save** - Saves the current settings to a file on a disk. The file will be saved with the extension .KDGC.

3) **Print** - Used to print a hard copy of the settings file.

4) **Exit** - Used to exit the program.

Communications Menu

1) **Open** - Used to initiate communications with the KDGC2000.

2) **Close** - Used to terminate communications with the KDGC2000.

3) **Send to KDGC** - Used to send the settings to the KDGC2000.

4) **Get from KDGC** - Used to retrieve the present settings from the KDGC2000.

5) **Change Password** - Used to change the logon passwords. The current level of access determines which passwords may be changed.

6) **Remote Start/Stop** - Used to start and stop the engine when the KDGC2000 is in AUTO.

Screens Menu

1) **Sensing Transformers** - Used to program the sensing transformer ratings.

2) **Pre-Alarms** - Used to program pre-alarm settings.

3) **Alarm** - Used to program alarm settings.

4) **Crank** - Used to program engine cranking settings.

5) **System** - Used to program system parameters.

6) **Meter** - Used to display measured quantities. Metering must be enabled to view the measured quantities.

Configure Menu

1) **RS232** - Used to program communication settings.

2) **Sensor Curve** - *Future addition.*

Help Menu

1) **About** - Displays current software version number.

SETTINGS DEFINITIONS

Definitions for all of the available settings are provided in the following paragraphs.

Sensing Transformers Settings

Refer to Figure 7-9 for the Sensing Transformers Settings definitions.

Generator PT Primary Volts - Rating of the primary side of transformer used to sense generator voltage.

Generator PT Secondary Volts - Rating of secondary side of transformer used to sense generator voltage.

Generator CT Primary Amps - Rating of primary side of transformer used to sense generator current.

Bus PT Primary Volts - Rating of primary side of transformer used to sense bus voltage.

Bus PT Secondary Volts - Rating of secondary side of transformer used to sense bus voltage.

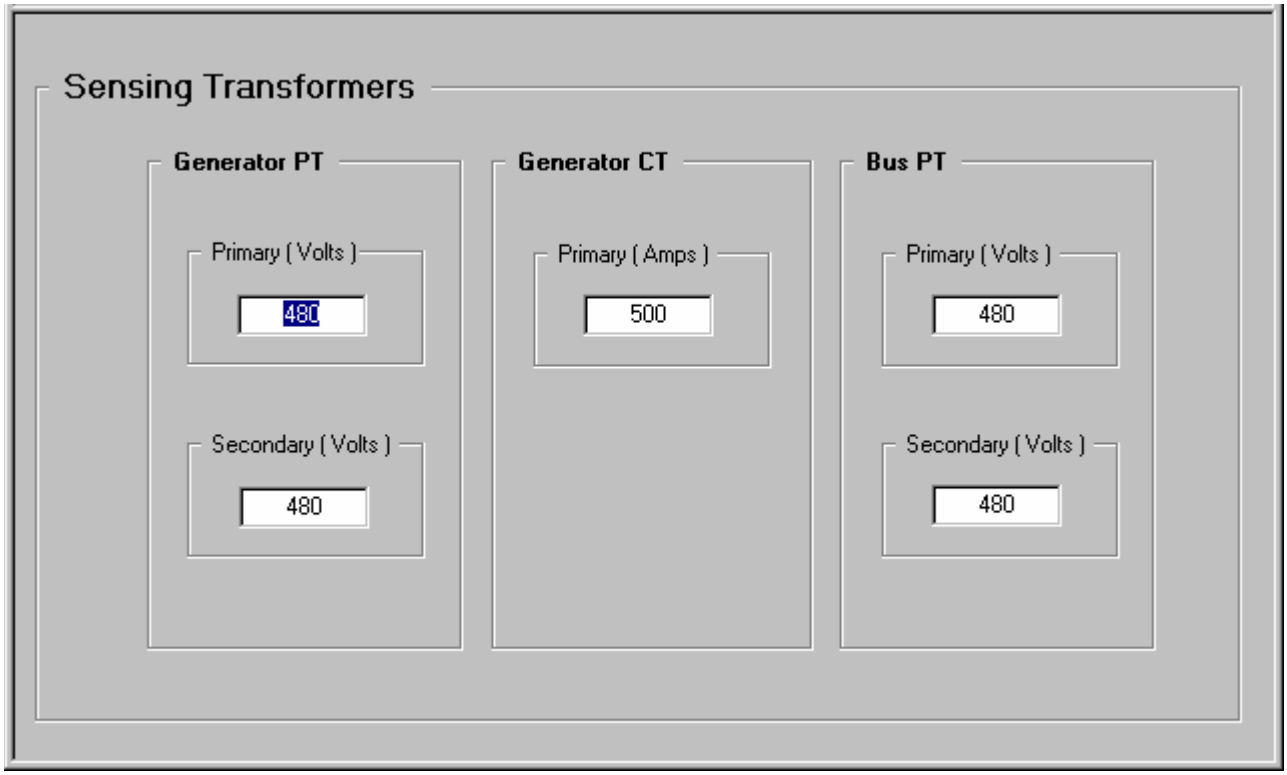

Figure 7-9. Sensing Transformers Screen

Pre-Alarm Settings - Low Fuel - Low Cool - Batt. OverVolt.

Refer to Figure 7-10 for the Pre-Alarm Settings - Low Fuel - Low Cool - Batt. OverVolt. definitions.

Low Fuel Pre-Alarm

1) Enable - Used to enable or disable the annunciation of the pre-alarm.

2) Threshold - Pre-Alarm will sound when the fuel level drops below this set level.

Low Cool Temperature Pre-Alarm

1) Enable - Used to enable or disable the annunciation of the pre-alarm.

2) Threshold - Pre-Alarm will sound when the coolant temperature falls below this level.

Battery Over Voltage Pre-Alarm

1) Enable - Used to enable or disable the annunciation of the pre-alarm.

2) Threshold - Non-adjustable. Threshold is 30 volts for a 24 volt system and 15 volts for a 12 volt system.

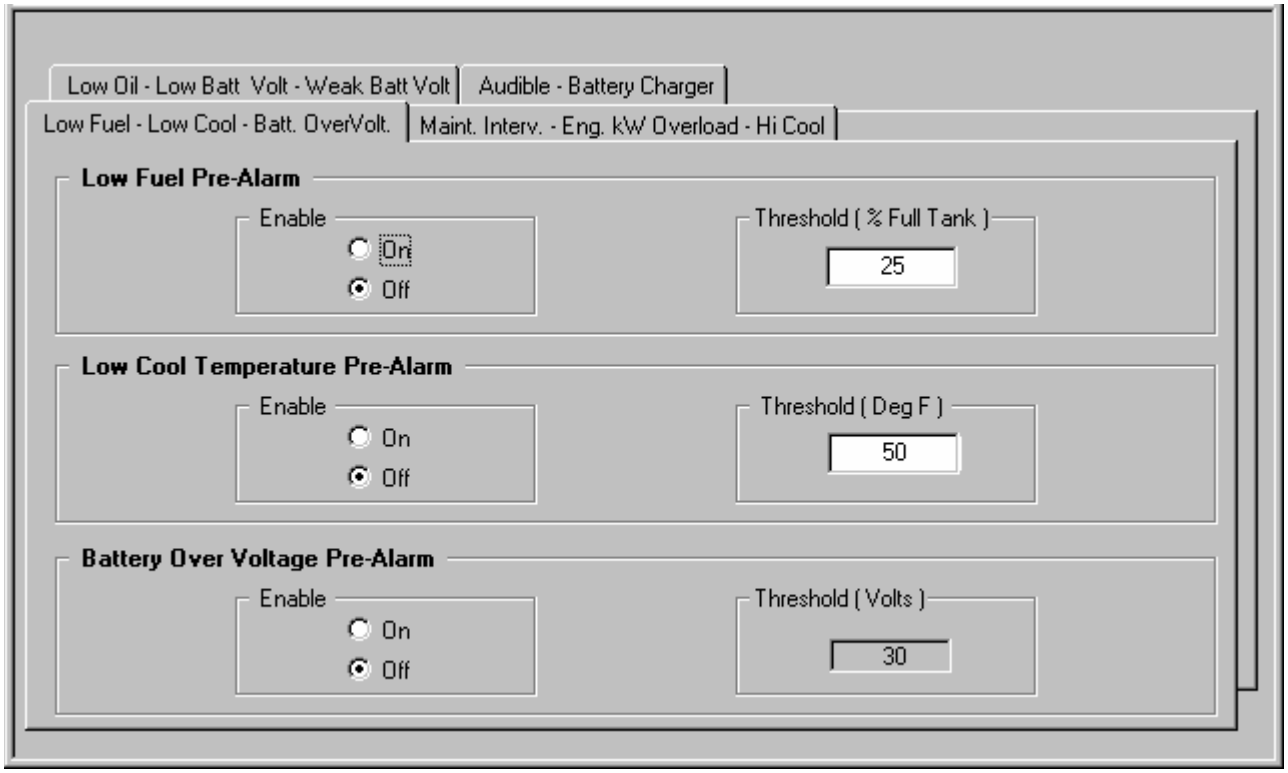

Figure 7-10. Pre-Alarm Settings - Low Fuel - Low Cool - Batt. OverVolt. Screen

Pre-Alarm Settings - Maint. Inter. - Eng. kW Overload - Hi Cool

Refer to Figure 7-11 for the Pre-Alarm Settings - Maint. Inter. - Eng. kW Overload - Hi Cool definitions.

Maintenance Interval Pre-Alarm

1) Enable - Used to enable or disable the annunciation of the pre-alarm.

2) Threshold - Sets the amount of time in hours that the next maintenance interval is due.

Engine kW Over Load Pre-Alarm

1) Enable - Used to enable or disable the annunciation of the pre-alarm.

2) Threshold - Sets the kilowatt level for the generator that will sound the pre-alarm.

Hi Coolant Temperature Pre-Alarm

1) Enable - Used to enable or disable the annunciation of the pre-alarm.

2) Threshold - Pre-Alarm will sound when the coolant temperature rises above this level.

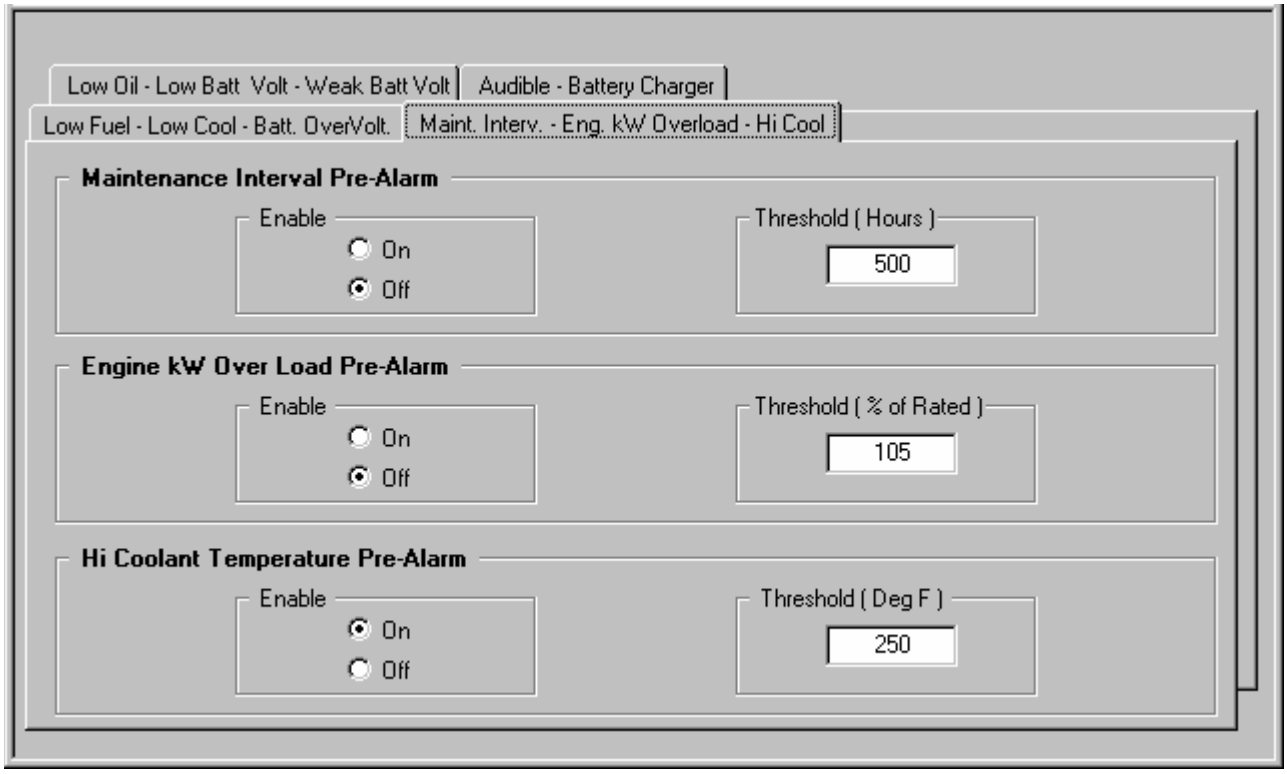

Figure 7-11. Pre-Alarm Settings - Maint. Inter. - Eng. kW Overload - Hi Cool Screen

Pre-Alarm Settings - Low Oil - Low Batt Volt - Weak Batt Volt

Refer to Figure 7-12 for the Pre-Alarm Settings - Low Oil - Low Batt Volt - Weak Batt Volt definitions

Low Oil Pressure Pre-Alarm

1) Enable - Used to enable or disable the annunciation of the pre-alarm.

2) Threshold - Pre-Alarm will sound when the Oil Pressure falls below this level.

Low Battery Voltage Pre-Alarm

1) Enable - Used to enable or disable the annunciation of the pre-alarm.

2) Threshold - Pre-Alarm will sound when the Battery Voltage falls below this level.

Weak Battery Voltage Pre-Alarm

1) Enable - Used to enable or disable the annunciation of the pre-alarm.

2) Threshold - Pre-Alarm will sound when the Battery Voltage falls below this level during cranking. This is a latching type Pre-Alarm and must be reset from the front panel.

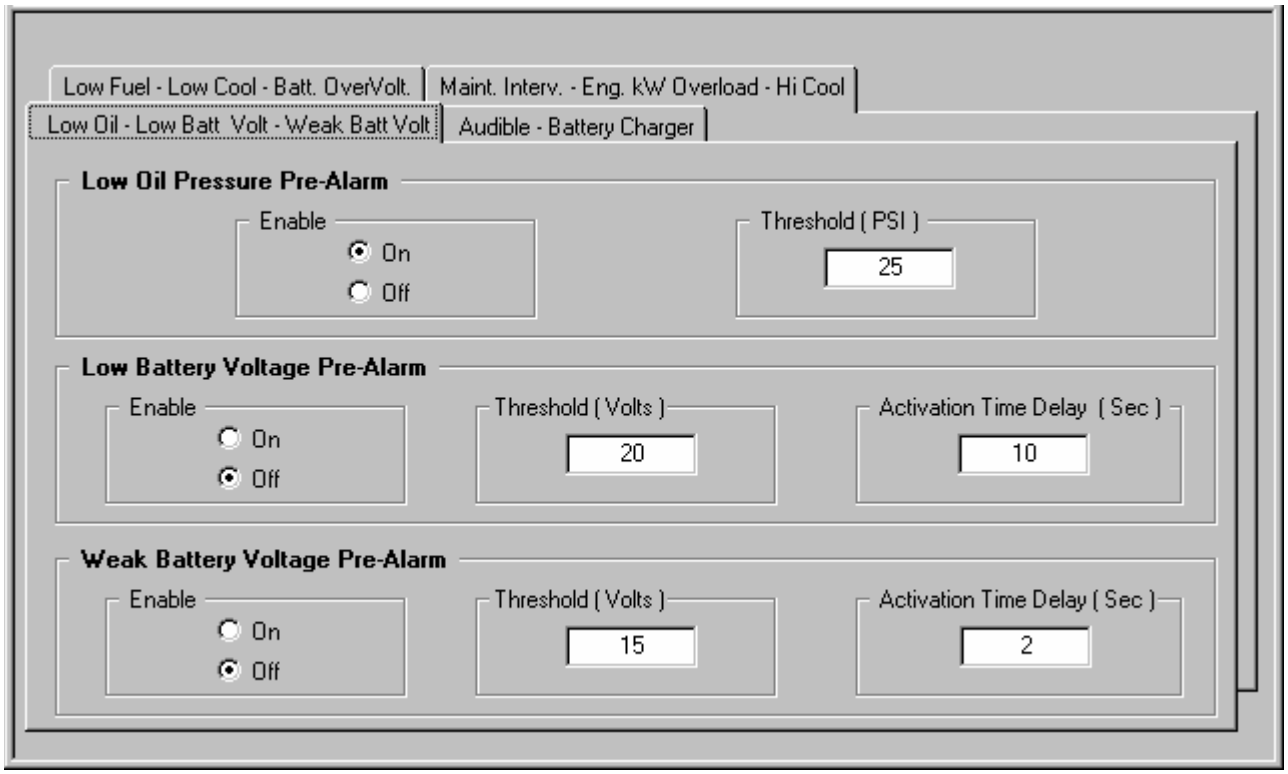

Figure 7-12. Pre-Alarm Settings - Low Oil - Low Batt Volt - Weak Batt Volt Screen

Pre-Alarm Settings - Audible - Battery Charger

Refer to Figure 7-13 for the Pre-Alarm Settings - Audible - Battery Charger definitions.

Audible Alarm

1) Enable - Used to enable or disable the horn on the KDGC2000.

Battery Charger Failure Pre-Alarm

1) Enable - Used to enable or disable the external contact to indicate the battery charger has failed.

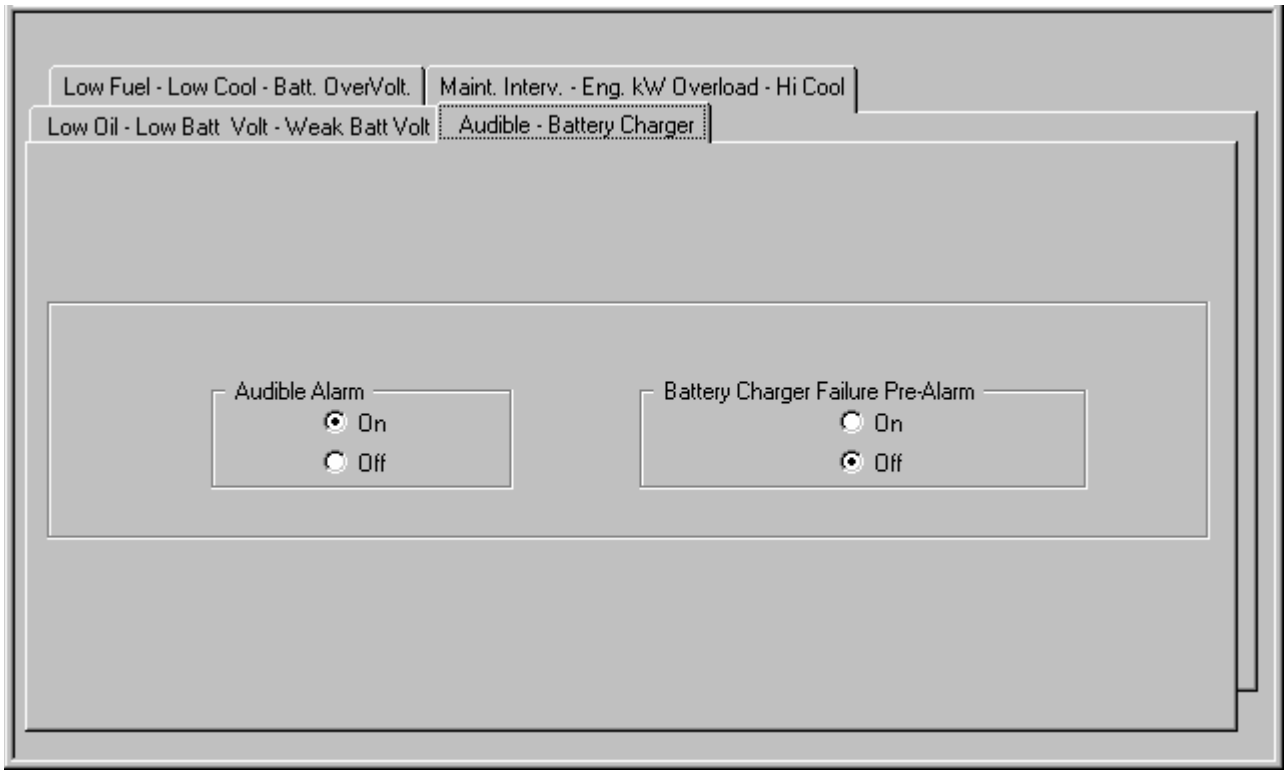

Figure 7-13. Pre-Alarm Settings - Audible - Battery Charger Screen

Alarm Settings - Hi Cool Temp - Low Oil Press

Refer to Figure 7-14 for the Alarm Settings - Hi Cool Temp - Low Oil Press definitions.

Hi Cool Temperature Alarm

1) Enable - Used to enable or disable the annunciation of the alarm.

2) Threshold - Sets the threshold level for the coolant temperature.

3) Arming Delay - Unadjustable - After the coolant temperature is above the threshold for 60 Sec the engine will be shutdown.

Low Oil Pressure Alarm

1) Enable - Used to enable or disable the annunciation of the alarm.

2) Threshold - Sets the threshold level for low oil pressure before engine shutdown occurs.

3) Arming Delay - Sets the amount of time delay, after crank disconnect, before the Oil Pressure Alarm becomes active.

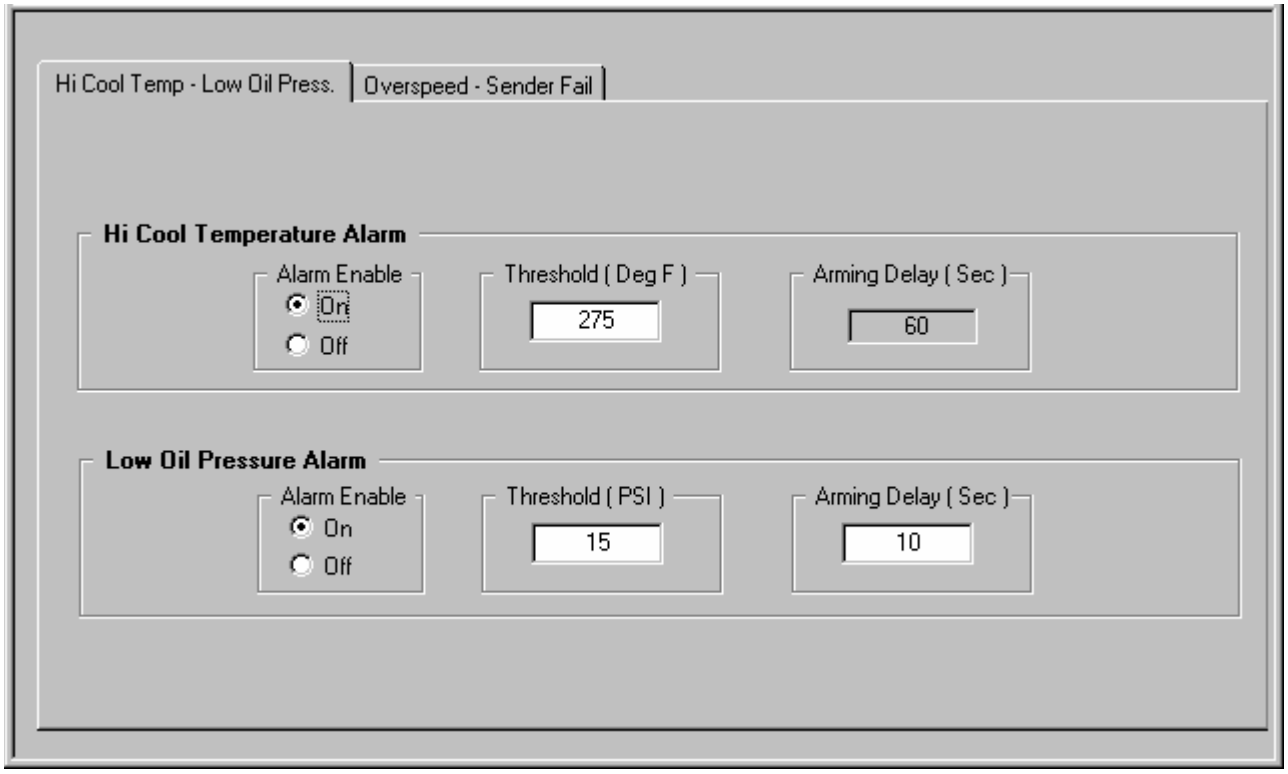

Figure 7-14. Alarm Settings - Hi Cool Temp - Low Oil Press Screen

Alarm Settings - Overspeed - Sender Fail

Refer to Figure 7-15 for the Alarm Settings - Overspeed - Sender Fail definitions.

Overspeed Alarm

1) Enable - Used to enable or disable the annunciation of the alarm.

2) Threshold - Sets the threshold level for engine speed, before shutdown occurs.

3) Alarm Activation - Sets the amount of time the engine speed must be above the threshold before the engine is shutdown.

Sender Failure Alarm

Coolant Temperature Sender:

1) Enable - Used to enable or disable the annunciation of the alarm.

2) Alarm Delay - Sets the amount of time the signal must be lost before the engine is shutdown.

Oil Pressure, Loss of Generator Voltage and Speed Failure

1) Enable - Used to enable or disable the annunciation of the alarm.

2) Global Sender Failure Alarm Time Delay - Sets the amount of time any of the signals (Oil Pressure, Loss of Generator Voltage and Speed Sender Failure) must be lost before the engine is shutdown.

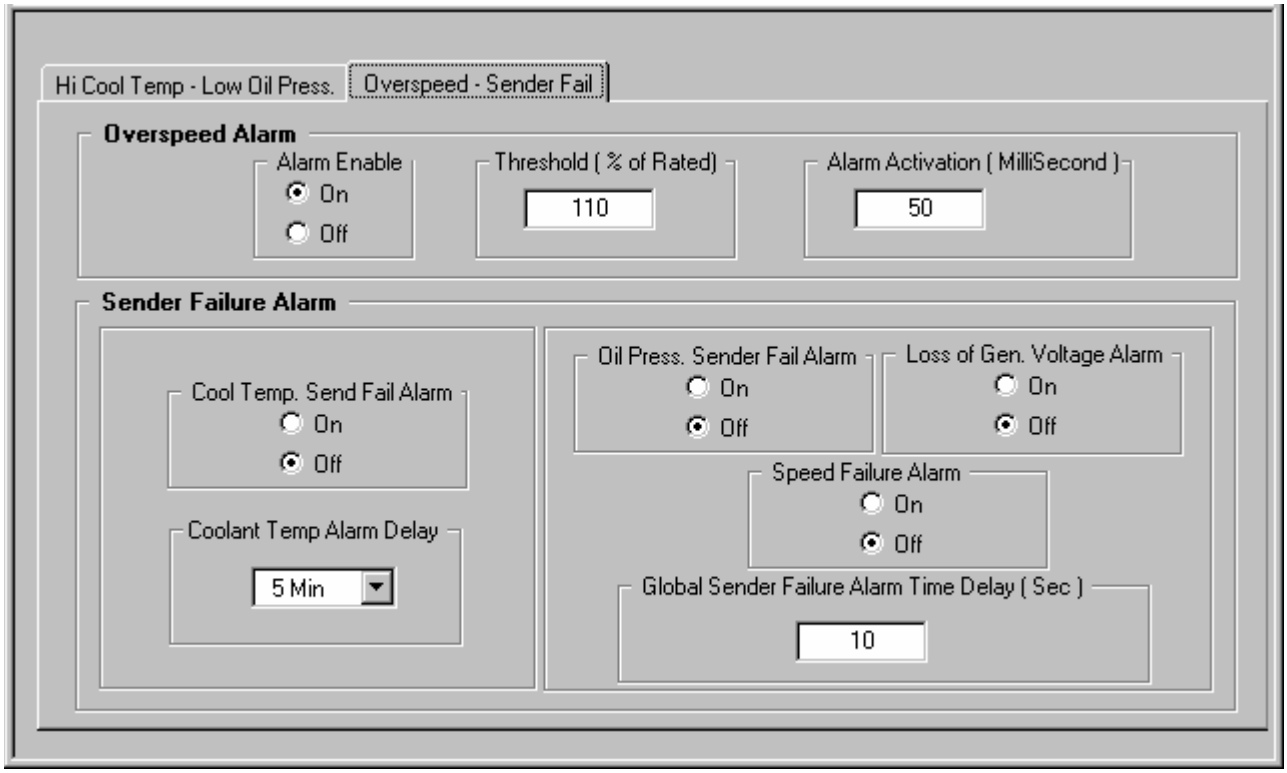

Figure 7-15. Alarm Settings - Overspeed - Sender Fail Screen

Crank Settings

Refer to Figure 7-16 for the Crank Settings definitions.

Cranking Style - Used to select the method of cranking.

Crank Disconnect Limit (% of Rated) - Used to select the engine speed above which the cranking process will be terminated.

Pre-Crank Delay (Sec) - Used to select the time between initiating engine start and actual beginning of engine cranking.

Pre-Start Contact After Disconnect - Used to select whether or not the pre-crank contact will remain closed after disconnect occurs.

Number of Crank Cycles - Used to select the number of times the engine may be cranked before an overcrank condition occurs. (Available only if Cycle Cranking is selected.)

Cycle Crank Time (Sec) - Used to select the duration of each crank attempt for cycle cranking.

Continuous Crank Time (Sec) - Used to select the duration of the single crank attempt before an overcrank condition occurs. (Available only if Continuous Cranking is selected.)

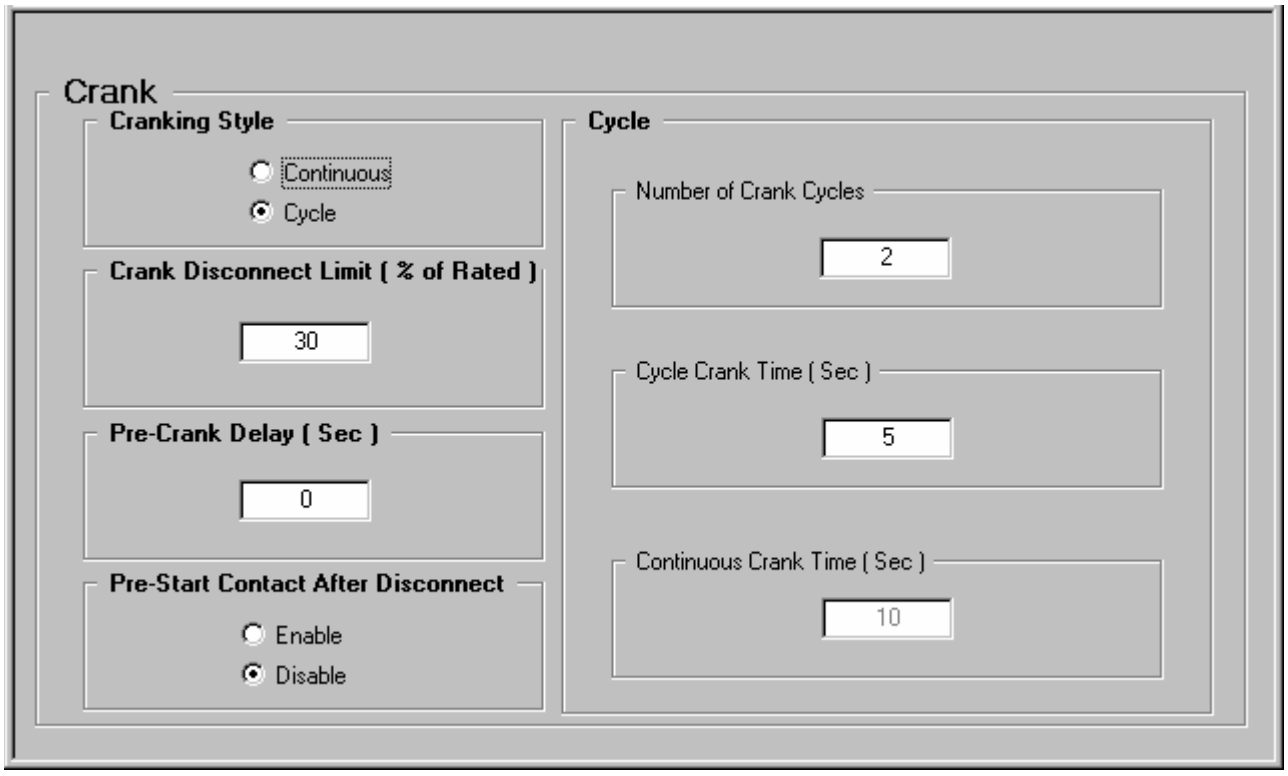

Figure 7-16. Crank Settings Screen

System Settings

Refer to Figure 7-17 for the System Settings definitions.

Genset's kW Rating - Used to enter the generator's kilowatt load rating.

No Load Cool Down Time - Used to select the time between the generator's load being removed and when the engine actually stops on a remote shutdown.

Rated Engine RPM - Used to enter the engine's rated RPM.

Alternator Frequency Rated (Hz) - Used to select the alternator's rated output frequency.

Battery Volts - Used to select the system's starting battery's nominal voltage.

NFPA Level - Used to select whether or not NFPA requirements are in effect.

 # Flywheel Teeth - Used to enter the number of teeth on the engines flywheel.

Generator Speed Mode - Used to select which sources are available for calculating engine speed.

Generator Connection - Used to select the generator connection scheme.

Generator Frequency - Used to select the generator's rated output frequency.

Unit System - Used to select English or Metric unit system for PC settings and front panel display on KDGC2000.

Generator Rotation - Used to select either ABC or ACB phase rotation.

Embedded Software Version - Shows what version the embedded software on the KDGC2000 is. This is only shown for a unit that you are logged onto.

Maintenance Interval Timer Reset - Used to terminate the "Maintenance Due" pre-alarm and reset the maintenance interval timer back to the programmed level. This is done when logged onto a KDGC2000 by clicking the box so a check mark is displayed then open the **Communications** menu and select **Send to KDGC**. After the command is sent to the KDGC the box is then unchecked.

Total kW Hours Reset - used to reset the kilowatt hours to zero. This is done when logged onto a KDGC2000 by clicking the box so a check mark is displayed then open the **Communications** menu and select **Send to KDGC**. After the command is sent to the KDGC the box is then unchecked.

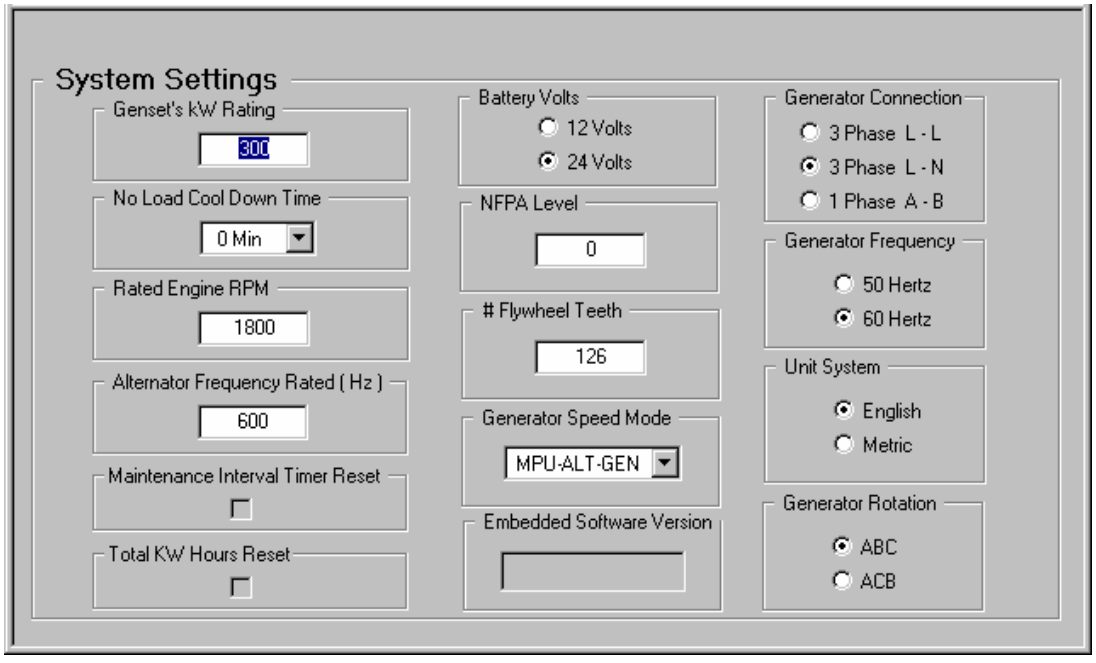

Figure 7-17. System Settings Screen

Metering

KDGC 2000 Windows software provides a means to monitor the metering data and alarm status. The metering data and the alarm status are refreshed approximately every 1.5 seconds.

Metering. The metering is separated into six different screens. There is one screen **Summary** that shows all the available metering values from the KDGC 2000 (Refer to Figure 7-18). The other five screens have a detailed subset of these metering values available. To enable metering you must be logged onto a unit and then open the **Metering** menu and select enable metering. If you are not on the metering screen the program will change to the metering screen and start updating the values. When metering is disabled all of the metering screens will be grayed out showing they are inactive.

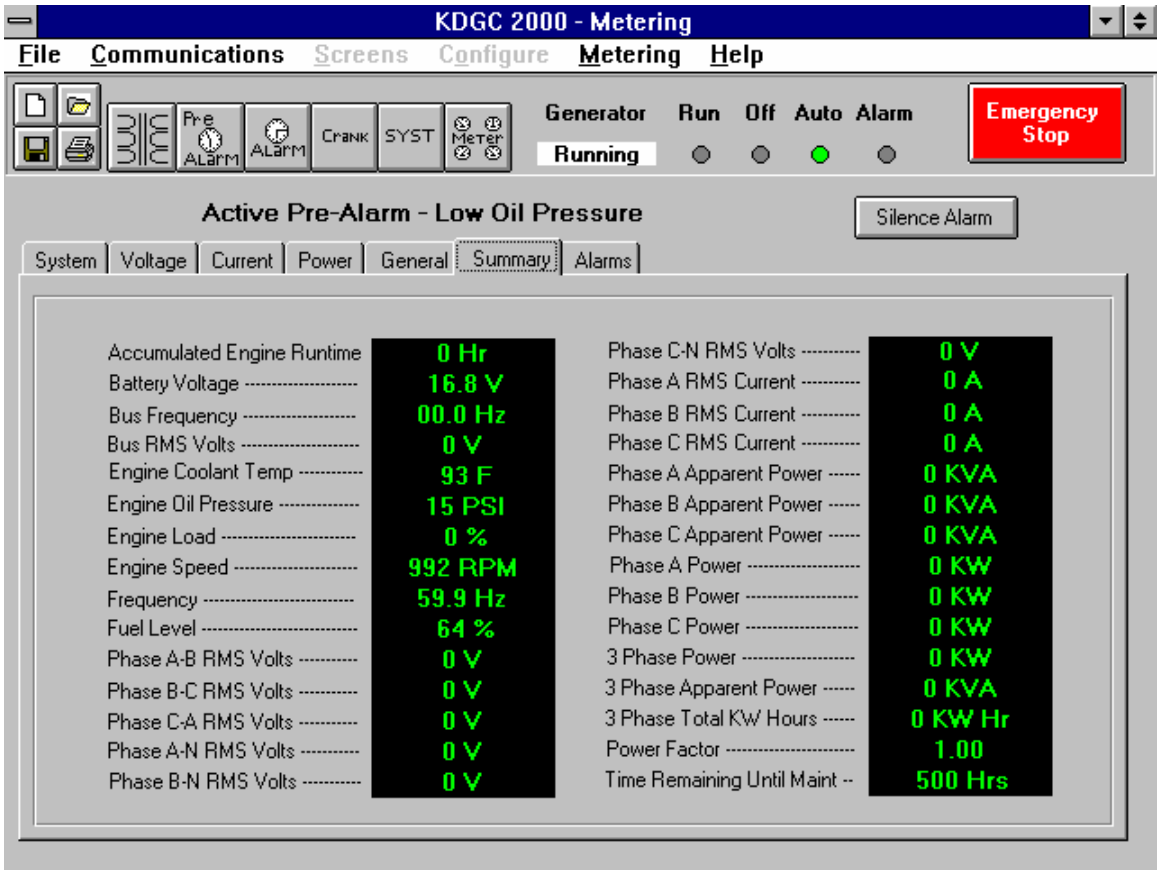

Figure 7-18. Metering Screen

Alarms. The pre-alarms and alarms are all shown on one screen (refer to Figure 7-19). When a pre-alarm becomes active the LED next to the name of the pre-alarm will be green. A description of the alarm will be shown on top of the screen and the computer speaker will begin to beep. The label on top of the screen will contain the same alarm until it goes away and then it will show the next pre-alarm going down the list that is active. When an alarm becomes active the LED next to the name of the alarm will be red. The screen will jump to the alarm tab and the computer speaker will begin to beep. If the alarm type is a Sender Failure the type of sender that failed will be indicated in the Sender Failure type area.

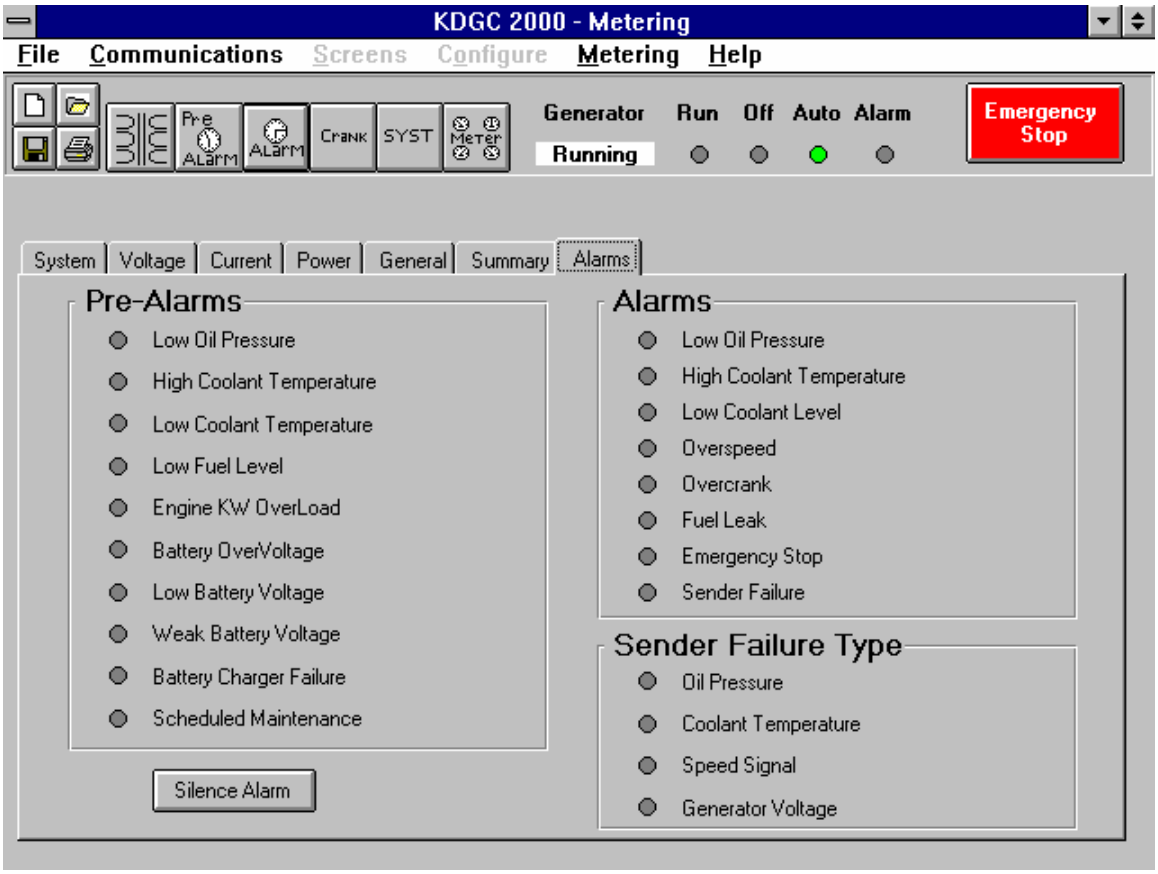

Figure 7-19. Metering - Alarms Screen

Top Portion Of The Screen

This area of the screen contains icon buttons for New File, File Open, Save File, Print File and a button for each screen. Refer to Figure 7-20.

New File - Overwrites the current settings with default settings as a starting point.

File Open - Open a currently saved settings file.

File Save - Saves the settings that are being edited to a settings file.

Print File - Prints a hard copy of the settings.

The Generator Status gives the last received state of the generator if you are logged on. When metering is enabled this is updated continuously along with the other meter readings. When metering is disabled it only checks the generator status when another communication event happens i.e. logon, send settings or get settings).

Emergency Stop button - This button is used to shut the generator down in an emergency. You must be logged onto the KDGC for this button to be active. When this button is selected it will change into an *Emergency Reset button*.



Figure 7-20. Top Portion of Screen

Katolight Service - Master Repair Manual - Page 2048

APPENDIX A • KDGC-2000 SETTINGS RECORD

INTRODUCTION

This appendix provides a complete listing of all KDGC-2000 settings. This listing is in the form of a settings record that you may use to record information relative to your system. These settings sheets may be removed and photo copied.

KDGC-2000 SETTINGS RECORD

Genset ID_____ **Date**_____

KDGC-2000 Serial Number_____ **Software Version Number**_____

Parameter	User Setting
FREQUENCY	
BATTERY VOLTAGE	
UNITS	
NFPA LEVEL	
SENSING CONNECTION	
PARITY	
BAUD RATE	
ADDRESS	
GENERATOR PT PRIMARY	
GENERATOR PT SECONDARY	
GENERATOR CT PRIMARY	
BUS PT PRIMARY	
BUS PT SECONDARY	
FLYWHEEL TEETH	
RATED RPM	
COOLDOWN TIME	
GENERATOR RATING	
ALTERNATOR FREQUENCY	
SPEED SIGNAL SOURCE	
PHASE ROTATION	
OVERSPEED ALARM	
THRESHOLD	
DELAY	
HIGH COOLANT TEMP	
ALARM	
THRESHOLD	
DELAY	
HIGH COOLANT TEMP	
PRE-ALARM	
THRESHOLD	

Parameter	User Setting
ARMING DELAY	
LOW OIL PRESSURE	
ALARM	
THRESHOLD	
ARMING DELAY	
LOW OIL PRESSURE	
PRE-ALARM	
THRESHOLD	
ARMING DELAY	
LOW COOLANT TEMPERATURE	
PRE-ALARM	
THRESHOLD	
ARMING DELAY	
LOW FUEL LEVEL	
PRE-ALARM	
THRESHOLD	
WEAK BATTERY	
PRE-ALARM	
THRESHOLD	
ACTIVATION DELAY	
LOW BATTERY	
PRE-ALARM	
THRESHOLD	
ACTIVATION DELAY	
BATTERY OVERVOLTAGE	
PRE-ALARM	
THRESHOLD	
BATTERY CHARGER	
FAILURE PRE-ALARM	

Parameter	User Setting

GLOBAL SENDER	
FAILURE ALARM	
ARMING DELAY	
GLOBAL PRE-ALARM	
BUZZER	
MAINTENANCE INTERVAL	
PRE-ALARM	
THRESHOLD	
ENGINE KILOWATT	
OVERLOAD PRE-ALARM	
THRESHOLD	
CRANKING STYLE	
CRANK CYCLES	
CYCLE CRANK TIME	
CONTINUOUS CRANK TIME	
PRE-CRANK DELAY	
PRE-START CONTACT AFTER DISCONNECT	
CRANK DISCONNECT SPEED	
SAFE RESTART SPEED	



Katolight Corporation
100 Power Drive
Mankato, MN 56001
Phone: 507-625-7973
Fax: 507-625-2968
www.katolight.com

Information incorporated into this publication
is derived from material copyrighted by
Basler Electric and used with their permission.

INSTRUCTION MANUAL

FOR

KDGC-2001 with J1939 Interface

DIGITAL GENSET CONTROLLER

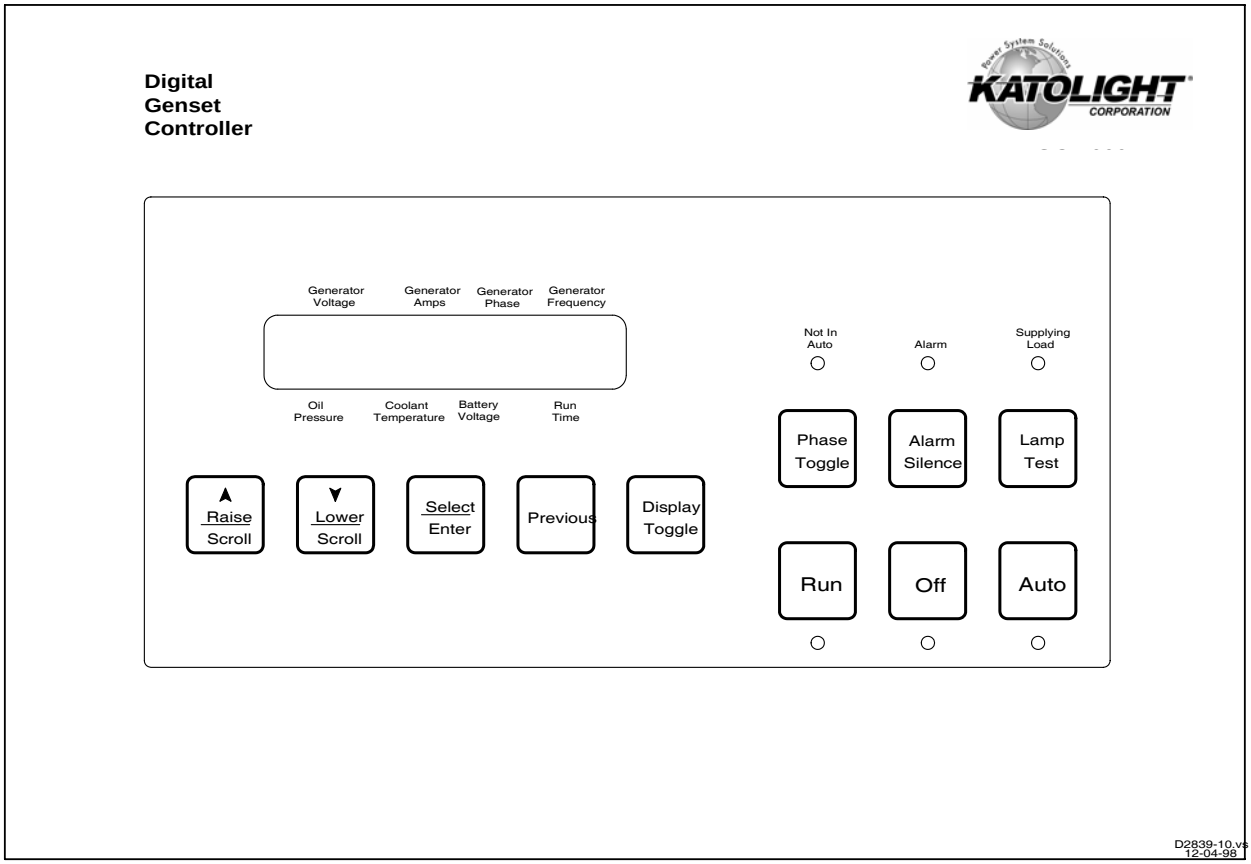

Power System Solutions

KATOLIGHT®

CORPORATION

Publication: 9 3589 00 990
Revision: C 04/04

INTRODUCTION

This instruction manual provides information about the operation and installation of the KDGC-2001 Digital Genset Controller. To accomplish this, the following information is provided.

- General Information and Specifications
- Controls and Indicators
- Functional Description
- Communication Software
- Installation
- Test Procedures

WARNING!

To avoid personal injury or equipment damage, only qualified personnel should perform the procedures in this manual.

NOTE

Be sure that the controller is hard-wired to earth ground with no smaller than 12 AWG copper wire attached to the ground terminal on the rear panel. When the controller is configured in a system with other devices, it is recommended to use a separate lead to the ground bus from each unit.

First Printing: January 2002

Printed in USA

Copyright © 2004 Katolight USA

April 2004

Information incorporated into this publication
is derived from material copyrighted by
Basler Electric and used with their permission.

It is not the intention of this manual to cover all details and variations in equipment, nor does this manual provide data for every possible contingency regarding installation or operation. The availability and design of all features and options are subject to modification without notice. Should further information be required, contact Katolight.

KATOLIGHT
100 POWER DRIVE
MANKATO, MINNESOTA 56001 USA
http://www.katolight.com
PHONE 507.625.7973 **FAX 507.625.2968**

CONTENTS

SECTION 1 • GENERAL INFORMATION 1-1
SECTION 2 • HUMAN-MACHINE INTERFACE 2-1
SECTION3 • FUNCTIONAL DESCRIPTION 3-1
SECTION 4 • INSTALLATION 4-1
SECTION 5 • TESTING 5-1
SECTION 6 • BESTCOMS SOFTWARE 6-1
APPENDIX A • KDGC-2001 SETTINGS RECORD A-1

SECTION 1 • GENERAL INFORMATION

TABLE OF CONTENTS

SECTION 1 • GENERAL INFORMATION 1-1
- DESCRIPTION 1-1
- FEATURES 1-1
- FUNCTIONS 1-1
  - Protection 1-1
  - Control 1-1
  - Monitoring 1-1
  - Detection 1-1
  - Metering 1-1
  - Reporting 1-1
- OUTPUTS 1-1
- OPTIONAL EQUIPMENT 1-2
  - Auxiliary Inputs and Outputs (Style AXX) 1-2
  - Dial-Out Modems (Style X1X and X2X) 1-2
  - Enhanced Communication (Style XXC) 1-2
  - Remote Annunciation Display Panel (RDP-110) 1-2
- MODEL AND STYLE NUMBER 1-2
  - Style Number Example 1-2
- SPECIFICATIONS 1-3
  - Current Sensing 1-3
  - Voltage Sensing 1-3
  - Frequency 1-3
  - Contact Sensing 1-3
  - Engine System Inputs 1-3
  - Output Contacts 1-4
  - Horn Output 1-5
  - Calculated Data 1-5
  - Communication Interface 1-5
  - Environment 1-5
  - Type Tests 1-5
  - UL Recognition 1-6
  - CSA Certification 1-6
  - Physical 1-6

List of Figures

Figure 1-1. KDGC-2001 Style Number Identification Chart 1-2

SECTION 1 • GENERAL INFORMATION

DESCRIPTION

The KDGC-2001 Digital Genset Controller provides integrated engine/genset control, protection, and metering in a single package. Microprocessor-based technology allows for precise measurement, setpoint adjustment, and timing functions. Front panel controls and indicators provides quick and simple operation. BESTCOMS software allows easy customizing of the KDGC-2001 for a specific application. Because of the KDGC-2001's low sensing burden, dedicated potential transformers (PTs) and current transformers (CTs) are not required. The backlit liquid crystal display (LCD) can be read under any lighting and temperature condition.

An SAE J1939 interface enables high-speed communication with the engine control unit (ECU) of an electronically controlled engine. The J1939 interface provides direct access to oil pressure, coolant temperature, and engine speed sensors. These parameters can be read directly from the ECU over the J1939 communication interface. When available, engine diagnostic data can also be accessed.

FEATURES

KDGC-2001 Digital Genset Controllers have the following features.

- Resistant to moisture, salt fog, dust, and chemical contaminants
- Resistant to the entrance of insects and rodents
- Suitable for mounting in any top-mount enclosure
- Suitable for controlling isolated generating systems or paralleled generating systems
- Easy setup through serial communication and BESTCOMS software
- SAE J1939 interface provides high-speed communication with the ECU on electronically-controlled engines

FUNCTIONS

KDGC-2001 Digital Genset Controllers perform the following functions.

Protection

- Engine oil pressure
- Fuel level sender
- Coolant temperature
- Overload

Control

- Engine cranking
- Engine cool-down

Monitoring

- Battery condition
- Engine maintenance
- Battery charger failure

Detection

- Fuel leak
- Low coolant level

Metering

- Generator voltage
- Generator current
- Generator frequency
- Engine coolant temperature
- Engine oil pressure
- Engine rpm
- Engine run-time
- Watts
- VA
- Power factor
- Watthours
- Battery voltage
- Fuel level

Reporting

- Engine diagnostics

OUTPUTS

Six sets of isolated, form A output contacts are provided: Start, Fuel Solenoid, Pre-start, Alarm, Pre-alarm, and EPS Supplying Load. An addition eight sets of Form C output contacts are available as an option. See *Specifications, Output Contacts* for contact ratings and terminal assignments.

OPTIONAL EQUIPMENT

Optional equipment available to the KDGC-2001 is described in the following paragraphs.

Auxiliary Inputs and Outputs (Style AXX)

An auxiliary I/O assembly, with four sets of input contacts and eight sets of output contacts, is available for applications that require more input and output contacts. The additional input contacts can be assigned to a desired function by using BESTCOMS to label the inputs so that the front panel LCD displays the proper message. The additional output contacts can be programmed through BESTCOMS to perform the desired actions.

Dial-Out Modems (Style X1X and X2X)

Two dial-out modems are available. When an alarm or pre-alarm condition occurs, the modem will dial up to four telephone numbers, in sequence, until an answer is received and the condition is annunciated. The standard modem (style X1X) has an operating temperature range of 0°C to 50°C (32°F to 122°F). The extended operating temperature range modem (style X2X) operates over the range of –40°C to 70°C (–40°F to 158°F). Both modems support the MNP10EC protocol for optimizing data transmission in cellular applications.

Enhanced Communication (Style XXC)

Enhanced communication provides remote start/stop genset control, remote fault viewing and reset, and remote engine/generator parameter metering. This option requires a dial-out modem.

Remote Annunciation Display Panel (RDP-110)

Applications requiring remote annunciation can use the Remote Display Panel, RDP-110. This display panel can annunciate all KDGC-2001 alarms, pre-alarms, and operating conditions.

MODEL AND STYLE NUMBER

KDGC-2001 electrical characteristics and operating features are defined by a combination of letters and numbers that make up the style number. The KDGC-2001 style number identification chart is shown in Figure 1-1.

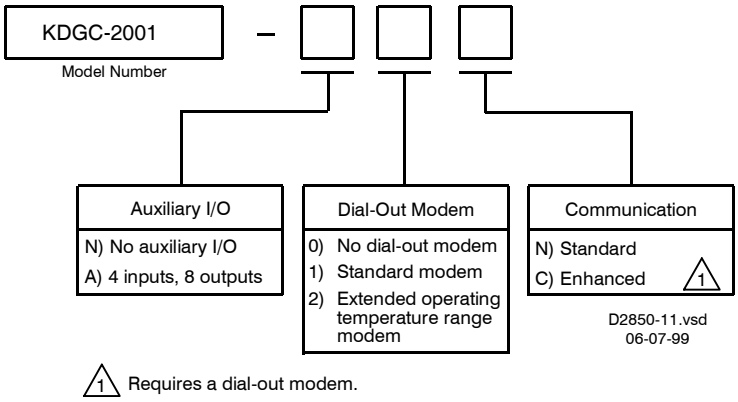

Figure 1-1. KDGC-2001 Style Number Identification Chart

The model number and style number appear on a label located on the Analog circuit board. Upon receipt of a unit, be sure to check the style number against the requisition and packing list to ensure that they agree.

Style Number Example

If a style number of A1C were specified, the KDGC-2001 would have the following features.

KDGC-2001 Digital Genset Controller

- A Auxiliary I/O: 4 contact inputs and 8 contact outputs
- 1 Dial-Out Modem: standard modem
- C Communication: enhanced communication

Katolight Service - Master Repair Manual - Page 2061

SPECIFICATIONS

KDGC-2001 electrical and physical specifications are listed in the following paragraphs.

Current Sensing

Continuous Rating

1 A Inputs:	0.02 to 1 A
5 A Inputs:	0.1 to 5 A

One Second Rating

1 A Inputs:	2.0 A
5 A Inputs:	10.0 A

Accuracy: ±0.5% of reading or ±1 A, whichever is greater (at 25°C (77°F))

Terminals:

1 A Inputs:	P9, P11 (A-phase), P6, P8 (B-phase), P3, P5 (C-phase)
5 A Inputs:	P10, P11 (A-phase), P7, P8 (B-phase), P4, P5 (C-phase)

Voltage Sensing

Continuous Rating: 12 to 576 V rms, 50/60 Hz

One Second Rating: 720 V rms

Accuracy: ±0.5% or reading or ±1 V, whichever is greater (at 25°C (77°F))

Burden: 1 VA

Terminals: P34 (A-phase), P35 (B-phase), P36 (C-phase), P37 (neutral)

Frequency

Range: 4 to 70 Hz

Accuracy: ±0.25% of reading or ±0.1 Hz, whichever is greater (at 25°C (77°F))

Contact Sensing

Configuration

Emergency Stop:	NC, dry
Battery Charger Failure:	NO, dry
Automatic Transfer Switch:	NO, dry
Low Coolant Level:	NO, dry
Auxiliary 1 – 4:	NO, dry

Terminals

Emergency Stop:	P17, P18
Battery Charger Failure:	P16, P41
Automatic Transfer Switch:	P15, P41
Low Coolant Level:	P14, P41
Auxiliary 1:	P5, P41
Auxiliary 2:	P9, P41
Auxiliary 3:	P13, P41
Auxiliary 4:	P17, P41

Engine System Inputs *

* Stated accuracies are subject to the accuracy of the senders used.

Fuel Level Sensing

Input Range:	240 to 33 Ω nominal
Accuracy:	±1% at 25°C (77°F)
Default Transducer:	Isspro R-8925 or equivalent

Fuel Leak Sensing

Detection Level:	<5 Ω across fuel level input

Coolant Temperature Sensing

Input Range:	637.5 to 62.6 Ω (corresponds to 100 to 300°F (37 to 149°F))
Accuracy at 25°C (77°F):	±0.5% of reading or ±1°, whichever is greater for measurement range of 37 to 115°C (99 to 239°F)
Default Transducer:	Stewart Warner 334-P

Oil Pressure Sensing

Input Range:	240 to 33.5Ω (corresponds to 1 to 100 psi)
Accuracy at 25°C (77°F)	
0 to 100 psi:	±0.5% of reading or ±1 psi, whichever is greater
0 to 690 kPa:	±0.5% of reading or ±7 kPa, whichever is greater
Default Transducer:	Stewart Warner 411-K

Battery Voltage Sensing

Nominal:	12 or 24 Vdc
Range:	8 to 32 Vdc
Battery Dip Ride-Through:	6 Vdc for 0.75 s
Accuracy:	±0.5% of reading or ±0.1 Vdc, whichever is greater at 25°C (77°F)
Burden:	16 W maximum

Magnetic Pickup Sensing

Voltage Range:	3 V peak (during cranking) to 35 V peak continuous into 10 kΩ
Frequency Range:	32 to 10,000 Hz

Engine Speed Sensing

Range:	750 to 3,600 rpm
Accuracy:	±0.5% of reading or ±2 rpm, whichever is greater at 25°C (77°F)

Output Contacts

Configuration

Start:	SPST, NO
Fuel Solenoid:	SPST, NO
Pre-Start:	SPST, NO
Alarm:	SPST, NO
Pre-Alarm:	SPST, NO
EPS Supplying Load:	SPST, NO
Auxiliary 1 – 8:	SPDT

Ratings

Start:	10 A at 24 Vdc, make, carry, and break
Fuel Solenoid:	10 A at 24 Vdc , make, carry, and break
Pre-Start:	2 A at 30 Vdc, make, carry, and break
Alarm:	2 A at 30 Vdc, make, carry, and break
Pre-Alarm:	2 A at 30 Vdc, make, carry, and break
EPS Supplying Load:	2 A at 30 Vdc, make, carry, and break
Auxiliary 1 – 8:	2 A at 30 Vdc, make, carry, and break

Terminals

Start:	P25, P26
Fuel Solenoid:	P19, P20
Pre-Start:	P21, P22
Alarm:	P23, P24
Pre-Alarm:	P27, P28
EPS Supplying Load:	P29, P30
Auxiliary 1:	P4 (NO), P2 (NC), P3 (COM)
Auxiliary 2:	P8 (NO), P6 (NC), P7 (COM)
Auxiliary 3:	P12 (NO), P10 (NC), P11 (COM)
Auxiliary 4:	P16 (NO), P14 (NC), P15 (COM)
Auxiliary 5:	P20 (NO), P18 (NC), P19 (COM)
Auxiliary 6:	P23 (NO), P21 (NC), P22 (COM)
Auxiliary 7:	P26 (NO), P24 (NC), P25 (COM)
Auxiliary 8:	P29 (NO), P27 (NC), P28 (COM)

Horn Output

Compatible Devices:	Basler 29760, Mallory SC628NL
Terminals:	P31 (–), P45 (+)

Calculated Data

Power Factor

Range:	+1.0 to –1.0, both leading and lagging
Accuracy:	±0.01 PF at 25°C (77°F)

Kilovoltamperes

Range:	0 to 9,999 kVA
Accuracy:	±0.5% of reading or ±0.1 kVA, whichever is greater at 25°C (77°F)

Kilowatts

Range:	0 to 9,999 kW
Accuracy:	±0.5% of reading or ±0.1 kW, whichever is greater at 25°C (77°F)

Kilowatthours

Range:	0 to 999,999,999 kWh
Accuracy:	±0.5% of reading or ±1 kWh, whichever is greater at 25°C (77°F)

Engine Run Time

Range:	0 to 99,999 h
Accuracy:	±0.5% of reading or ±1 h, whichever is greater at 25°C (77°F)

Maintenance Interval

Range:	0 to 5,000 h
Accuracy:	±0.5% of reading or ±1 h, whichever is greater at 25°C (77°F)

Communication Interface

Full Duplex RS-232 Port

Connection:	Female DB-9 connector (COM1)
Baud:	1200, 2400, or 9600
Data Bits:	8
Parity:	None, Odd, or Even
Stop Bits:	1

Telephone Modem (FCC, part 68 approved modem)

Operating Temperature Range

Standard (style X1X):	0 to 50°C (32 to 122°F)
Extended (style X2X):	–40 to 70°C (–40 to 158°F)

SAE J1939 Interface

Differential Bus Voltage:	1.5 to 3 Vdc
Maximum Voltage:	–32 to 32 Vdc with respect to negative battery terminal
Communication Rate:	250 kb/s

Environment

Temperature Range

Operating:	–40 to 70°C (–40 to 158°F)
Storage:	–40 to 85°C (–40 to 185°F)

Type Tests

Shock:	Withstands 15 G in each of three mutually perpendicular planes
Vibration:	Withstands 2 G, in each of three mutually perpendicular planes, without structural damage or degradation of performance. Device was swept over the range of 10 to 500 Hz for a total of six 15-minute sweeps.
Salt Fog:	Qualified to ASTM-117B-1989

Radio Interference:	Type tested using a 5 W, handheld transceiver operating at random frequencies centered around 144 and 440 MHz with the antenna located within 150 mm (6”) of the device in both vertical and horizontal planes.
Dielectric Strength:	2,352 Vac at 50/60 Hz for 1 second between voltage sensing inputs and all other circuits. 500 Vac at 50/60 Hz for 1 minute between any of the following groups. Current Sensing Inputs: 8 mA RS-232 Port (COM1): 6 mA

UL Recognition

All KDGC-2001 controllers are UL recognized per Standard 508, *Standard for Industrial Control Equipment* (UL file E97035).

CSA Certification

All KDGC-2001 controllers are CSA certified per Standard CAN/CSA-C22.2, Number 14-95, CSA file LR 23131.

Physical

Weight:	907 g (2.0 lb)
Dimensions:	See Section 4, *Installation* for device dimensions and panel cutout requirements.

SECTION 2 • HUMAN-MACHINE INTERFACE

TABLE OF CONTENTS

SECTION 2 • HUMAN-MACHINE INTERFACE 2-1
INTRODUCTION 2-1
FRONT PANEL 2-1
REAR PANEL 2-2
CAN INTERFACE CONNECTOR 2-4

List of Figures

Figure 2-1. Front Panel HMI Components 2-1
Figure 2-2. Rear Panel HMI Components 2-2
Figure 2-3. CAN Interface Connector Location 2-4

List of Tables

Table 2-1. Front Panel HMI Descriptions 2-1
Table 2-2. Rear Panel HMI Descriptions 2-3

SECTION 2 • HUMAN-MACHINE INTERFACE

INTRODUCTION

The KDGC-2001 human-machine interface (HMI) consists of controls and indicators accessed at the front panel and terminals and connectors accessed at the rear panel.

FRONT PANEL

Figure 2-1 shows the HMI components of the front panel. Table 2-1 lists the locators of Figure 2-1 along with a description of each HMI component.

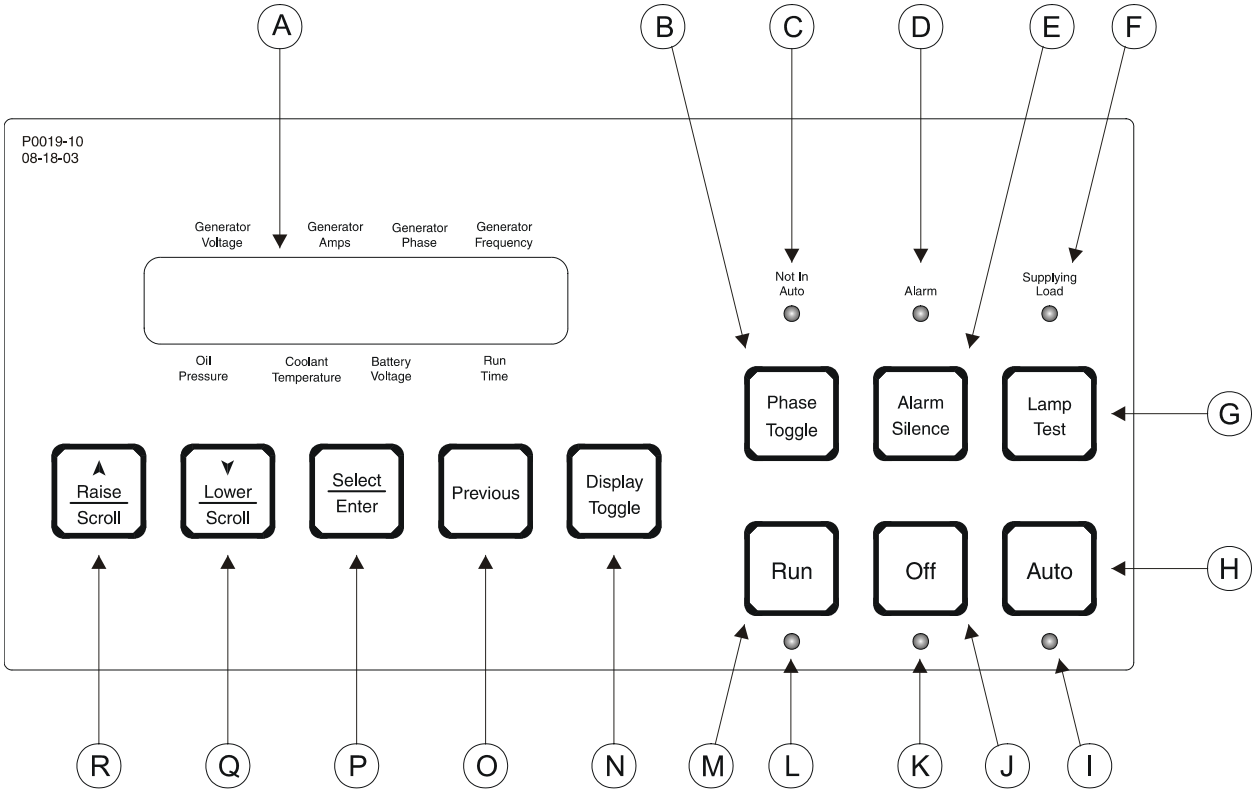

Figure 2-1. Front Panel HMI Components

Table 2-1. Front Panel HMI Descriptions

Locator	Description
A	*Display*. The two line by 20 character liquid crystal display (LCD) is the primary interface for metering, alarms, pre-alarms, and protective functions. The LCD has three display modes: Normal, Alternate, and Menu. In Normal mode, the displayed parameters correspond to one of the eight labels surrounding the display. In Alternate mode, the LCD displays parameters and the corresponding labels. In Menu mode, the LCD scrolls through the KDGC-2001 parameters.
B	*Phase Toggle Pushbutton.* Pressing this control scrolls through the parameters available in Normal display mode.
C	*Not in Auto Indicator.* This red LED lights when the KDGC-2001 is not operating in Auto mode.
D	*Alarm Indicator.* This red indicator lights continuously during alarm conditions and flashes during pre-alarm conditions.
E	*Alarm Silence Pushbutton.* Pressing this control resets the KDGC-2001 audible alarm.
F	*Supplying Load Indicator.* This green indicator lights when the generator is supplying more than two percent of rated current.
G	*Lamp Test Pushbutton.* Pressing this control tests the KDGC-2001 indicators by exercising all

Locator	Description
	LCD segments and lighting all LEDs.
H	*Auto Pushbutton.* Pressing this control places the KDGC-2001 in Auto mode.
I	*Auto Mode Indicator.* This green LED lights when the KDGC-2001 is operating in Auto mode.
J	*Off Pushbutton.* Pressing this control places the KDGC-2001 in Off mode.
K	*Off Mode Indicator.* This red LED lights when the KDGC-2001 is in Off mode.
L	*Run Mode Indicator.* This green LED lights when the KDGC-2001 is operating in Run mode.
M	*Run Pushbutton.* Pressing this control places the KDGC-2001 in Run mode.
N	*Display Toggle Pushbutton.* Pressing this control scrolls through the display modes.
O	*Previous Pushbutton.* Pressing this control scrolls through LCD display modes.
P	*Select/Enter Pushbutton.* This control is pressed to enter menu sublevels and select setpoints.
Q	*Lower/Scroll Pushbutton.* This control is pressed to scroll backward through menus or decrement setpoints.
R	*Raise/Scroll Pushbutton.* This control is pressed to scroll forward through menus or increment setpoints.

REAR PANEL

All KDGC-2001 terminals and connectors are accessed at the rear panel. Figure 2-2 shows the HMI components (except the CAN interface connector) of the rear panel HMI. Table 2-2 lists the locators of Figure 2-2 along with a description of each rear panel HMI component.

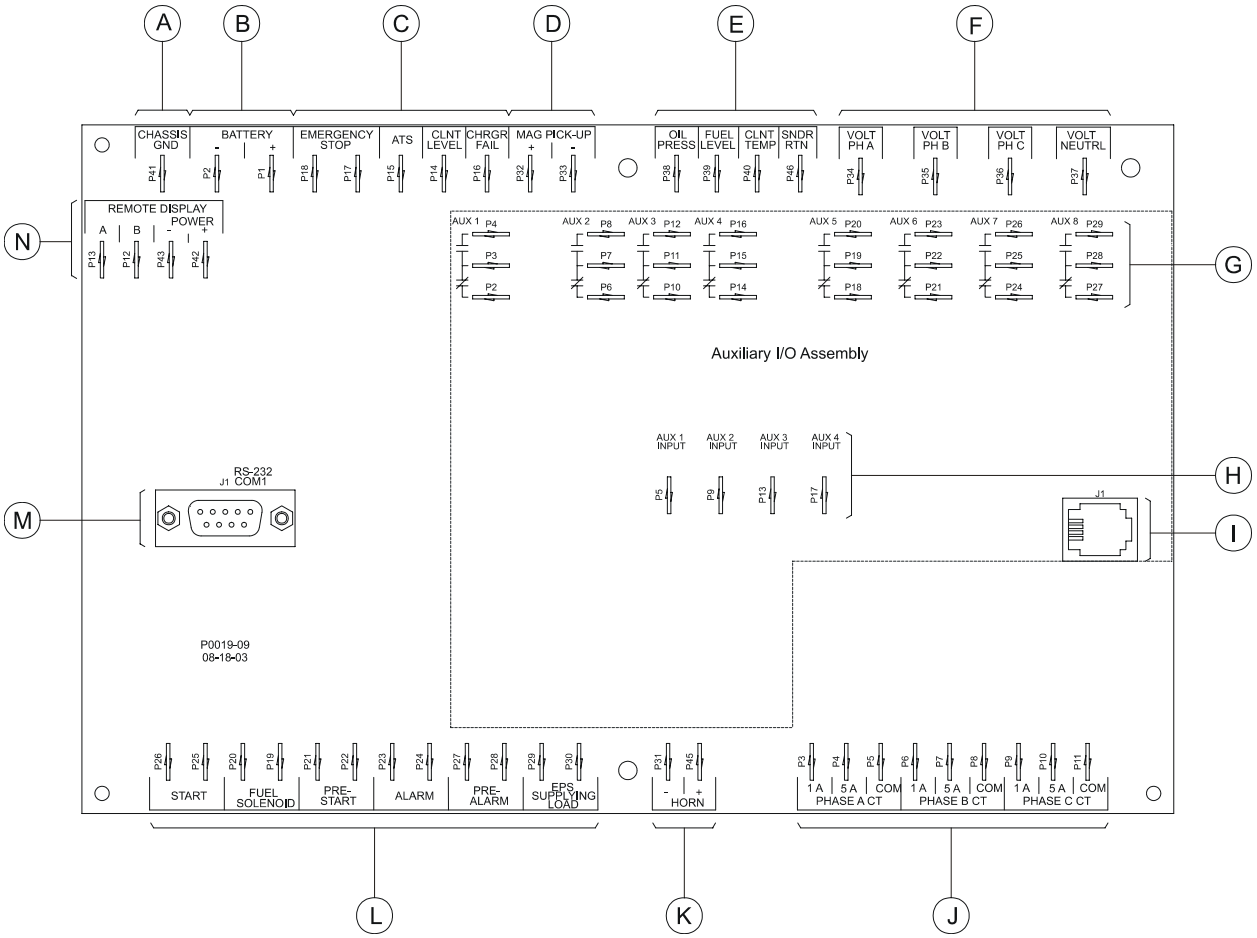

Figure 2-2. Rear Panel HMI Components

Table 2-2. Rear Panel HMI Descriptions

Locator	Terminals	Description
A	P41	*Chassis Ground.* This terminal provides the chassis ground connection. The KDGC-2001 must be hard-wired to earth ground with no smaller than 12 AWG copper wire.
B	P1 (+), P2 (–)	*Battery.* KDGC-2001 operating power is applied to these terminals. The KDGC-2001 accepts a nominal input of 12 Vdc or 24 Vdc.
C		*Contact Sensing Inputs*
	P17, P18	*Emergency Stop.* An open circuit at this input initiates an emergency stop. During an emergency stop, the KDGC-2001 removes power from all output relays.
	P15, P1	*Automatic Transfer Switch.* A closed circuit at this input starts the engine when the KDGC-2001 is operating in Auto mode.
	P14, P1	*Coolant Level.* When the voltage sensed at this input decreases to zero, the KDGC-2001 annunciates a low coolant level condition.
	P16, P1	*Battery Charger Fail.* When the voltage sensed at this input decreases to zero, the KDGC-2001 annunciates a battery charger failure.
D	P32 (+), P33 (–)	*Magnetic Pickup.* Voltage received at this input is scaled and conditioned for use as a speed signal. This input is not used when the CAN interface is enabled.
E		*Transducer Inputs*
	P38, P46	*Oil Pressure.* This input connects to a user-supplied oil pressure transducer. The default oil pressure transducer is Stewart Warner 411-K or equivalent.
	P39, P46	*Fuel Level.* This input connects to a user-supplied fuel level transducer. The default fuel level transducer is Isspro R-8925 or equivalent.
	P40, P46	*Coolant Temperature.* This input connects to a user-supplied coolant temperature transducer. The default coolant temperature transducer is Stewart Warner 334-P or equivalent.
F		*Voltage Sensing Inputs*
	P34	*A-phase.* This input connects to phase A of the generator output.
	P35	*B-phase.* This input connects to phase B of the generator output.
	P36	*C-phase.* This input connects to phase C of the generator output.
	P37	*Neutral.* This input connect to the generator neutral in phase-to-neutral sensing applications.
G		*Auxiliary Output Contacts (style AXX)*
	NO, COM, NC	These eight sets of programmable, SPDT output contacts can be programmed to close when any one of the selected inputs is active.
	P4, P3, P2	*Auxiliary 1 Output*
	P8, P7, P6	*Auxiliary 2 Output*
	P12, P11, P10	*Auxiliary 3 Output*
	P16, P15, P14	*Auxiliary 4 Output*
	P20, P19, P18	*Auxiliary 5 Output*
	P23, P22, P21	*Auxiliary 6 Output*
	P26, P25, P24	*Auxiliary 7 Output*
	P29, P28, P27	*Auxiliary 8 Output*
H		*Auxiliary Contact Inputs (style AXX)*
		These four sets of contact inputs are designed for use with normally-open contact inputs. Each input can be programmed as an alarm, pre-alarm, or neither.
	P5, P1	*Auxiliary 1 Input*
	P9, P1	*Auxiliary 2 Input*
	P13, P1	*Auxiliary 3 Input*
	P17, P1	*Auxiliary 4 Input*

Locator	Terminals	Description
I	J1	*Modem (style X1X or X2X).* USOC RJ-11C four-terminal telephone jack provides dial-in and dial-out capability.
J	*1 A/5A, COM* P3/P4, P5 P6/P7, P8 P9/P10, P11	*Current Sensing Inputs* *A-phase.* This input connects to a CT monitoring the generator phase A current. *B-phase.* This input connects to a CT monitoring the generator phase B current. *C-phase.* This input connects to a CT monitoring the generator phase C current.
K	P31 (–), P45 (+)	*Horn.* This output supplies power to an external horn. Recommended devices are Basler 29760 and Mallory SC628NL.
L	 P25, P26 P19, P20 P21, P22 P23, P24 P27, P28 P29, P30	*Output Contacts* *Start.* This normally-open set of contacts connects to the start solenoid and closes when the KDGC-2001 initiates engine cranking. *Fuel Solenoid.* This normally-open set of contacts connects to the fuel solenoid. The fuel solenoid output closes when engine cranking is initiated and opens when a stop command is received by the KDGC-2001. *Pre-Start.* This normally-open set of contacts closes to energize the glow plugs prior to engine cranking. Depending on system setup, the Pre-Start output may open upon engine startup or stay closed during engine operation. *Alarm.* This normally-open set of contacts closes when an alarm condition is detected. Section 3, *Functional Description, Software, Alarms* provides information about alarm conditions. *Pre-Alarm.* This normally-open set of contacts closes when a pre-alarm condition is detected. Section 3, *Functional Description, Software, Pre-Alarms* provides information about alarm conditions. *EPS Supplying Load.* This set of normally-open output contacts closes when the controlled generator is supplying power to the load.
M	COM1	*RS-232 Communication Port.* This female DB9 connector uses serial communication to enhance KDGC-2001 setup. A standard serial cable connects the KDGC-2001 to a PC.
N	P13 (A), P12 (B), P42 (+), P43 (–)	*Remote Display Connections.* Remote Display Panel, RDP-110, connects to these terminals. The RDP-110 annunciates all KDGC-2001 alarms, pre-alarms, and operating conditions in accordance with NFPA specifications.

CAN INTERFACE CONNECTOR

The SAE J1939 CAN interface enables the KDGC-2001 to communicate with the genset's ECU and gather engine parameters, battery voltage, and other information. Using the ECU to obtain engine information eliminates the need to use transducers and the associated wiring.

The location of the CAN interface connector is shown in Figure 2-3.

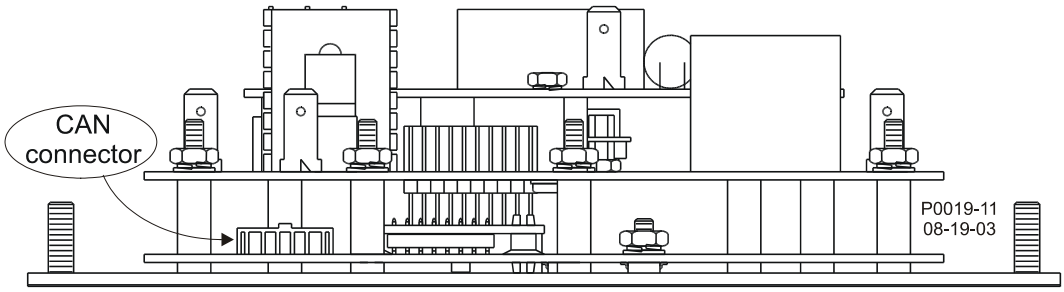

Figure 2-3. CAN Interface Connector Location

SECTION 3 • FUNCTIONAL DESCRIPTION

TABLE OF CONTENTS

SECTION 3 • FUNCTIONAL DESCRIPTION 3-1
GENERAL 3-1
INPUTS 3-2
Battery Operating Voltage 3-2
Contact Sensing Inputs 3-2
Emergency Stop 3-2
Automatic Transfer Switch 3-2
Low Coolant Level 3-2
Battery Charger Failure 3-2
Transducer Inputs 3-2
Coolant Temperature 3-2
Oil Pressure 3-2
Fuel Level And Fuel Leak 3-2
Sender Return Connection 3-3
Speed Signal Inputs 3-3
Generator Voltage 3-3
Magnetic Pickup 3-3
Voltage Inputs 3-3
Current Inputs 3-3
Serial Communication/Ethernet Adaptor Port 3-3
CAN Interface for J1939 Communications 3-3
Programmable Contact Sensing Inputs 3-5
MICROPROCESSOR 3-5
Formulas 3-6
Related Circuits 3-6
Zero Crossing Detection 3-6
Signal Switching 3-6
RMS-to-DC Converter 3-6
Analog-to-Digital Converter 3-6
OUTPUTS 3-6
Emergency Stop Contact Input Interaction 3-7
Remote Display Panel 3-7
Optional Auxiliary Outputs 3-7
TELEPHONE MODEMS 3-7
Type of Service 3-7
Telephone Company Procedures 3-7
If Problems Arise 3-7
Cellular Communications 3-8
SOFTWARE 3-8
Power-Up Sequence 3-8
Watchdog Timer 3-8
Cool Down Timer 3-9
Speed Source Failure 3-9
Cranking 3-9
Abnormal Start Curve One 3-9
Abnormal Start Curve Two 3-10
Abnormal Start Curve Three 3-10
Abnormal Start Curve Four 3-10
Normal Start Curve Five 3-10
Alarms 3-10
Overcrank Alarm 3-10
Overspeed Alarm 3-10
High Coolant Temperature Alarm 3-10
Low Oil Pressure Alarm 3-10
Engine Sender Fault Alarm 3-10

Low Fuel Level Alarm ... 3-10
Low Coolant Level Alarm ... 3-11
CAN Bus Alarm ... 3-11
Pre-Alarms ... 3-11
Magnetic Pickup (MPU) Failure Pre-Alarm ... 3-11
High Coolant Temperature Pre-Alarm ... 3-11
Low Coolant Temperature Pre-Alarm ... 3-11
Weak Battery Pre-Alarm ... 3-11
Low Battery Voltage Pre-Alarm ... 3-11
Battery Overvoltage Pre-Alarm ... 3-11
Low Fuel Level Pre-Alarm ... 3-11
Engine Overload Pre-Alarm ... 3-11
Battery Charger Failure Pre-Alarm ... 3-11
Maintenance Pre-Alarm ... 3-12
Active DTC Pre-Alarm ... 3-12
CAN Bus Pre-Alarm ... 3-12
DISPLAY OPERATION ... 3-12
Normal Mode ... 3-13
Alternate Display Mode ... 3-12
Diagnostic Trouble Codes (DTC) Display Mode ... 3-13
ECU Parameters Mode ... 3-14
Menu Mode ... 3-16
Menu 1 ... 3-16
Menu 1.1 ... 3-16
Menu 1.2 ... 3-16
Menu 1.3 ... 3-17
Menu 1.4 ... 3-18
Menu 1.5 ... 3-18
Menu 1.6 ... 3-18
Menu 1.7 ... 3-18
Menu 1.8 ... 3-18
Menu 1.9 ... 3-19
Menu 1.10 ... 3-19
Menu 1.11 ... 3-19
Menu 1.12 ... 3-19
Menu 1.13 ... 3-19
Menu 1.14 ... 3-19
Menu 2 ... 3-20
Menu 2.1 ... 3-20
Menu 2.2 ... 3-20
Menu 2.3 ... 3-21
Menu 2.4 ... 3-21
Menu 3 ... 3-21
Menu 3.1 ... 3-21
Menu 3.1.2 ... 3-21
Menu 3.1.3 ... 3-22
Menu 3.2 ... 3-22
Menu 3.2.1 ... 3-22
Menu 3.2.2 ... 3-22
Menu 3.2.3 ... 3-23
Menu 3.2.4 ... 3-22
Menu 3.3 ... 3-23
Menu 4 ... 3-23
Menu 4.1 ... 3-23
Menu 4.2 ... 3-23
Menu 4.4 ... 3-23
Menu 4.5 ... 3-23
Menu 4.6 ... 3-23
Menu 4.7 ... 3-24
Exiting Menu Mode ... 3-24
Modifying Setpoints ... 3-25

Key Code 3-26
Front Panel Adjustable Parameters 3-26
FIRMWARE UPGRADES 3-26
ENGINE CONTROL UNIT (ECU) SUPPORT 3-26
Enabling of ECU Support 3-26
ECU Limitations 3-27
The KDGC-2001 Solution 3-27
Alarm and Pre-Alarm 3-27
Fuel Solenoid Relay 3-27
Background 3-28
Eleven States of Operation 3-28
Display Values (ECU Support Enabled) 3-28
ECU With An External Fuel Solenoid 3-28
STATE MACHINES 3-29
State Machine Description 3-29
State Transitions 3-29
Normal Program Control 3-29
ECU Power Support Program Control 3-30
Output Relay Status 3-30
Initial State - Power Up/Reset 3-31
Ready State 3-32
Forced Pulses: 3-32
Going to Off or Auto-Off 3-32
Pulsing State 3-32
Connecting State 3-33
Pre-Start State 3-33
Cranking State 3-34
Resting State 3-34
Running State 3-35
Cooling State 3-35
Shutting Down State 3-36
Alarm State 3-36

List of Figures

Figure 3-1. KDGC-2001 Function Block Diagram 3-1
Figure 3-2. Normal And Abnormal Engine Crank Curves 3-9
Figure 3-3. Top Level of Display Modes 3-13
Figure 3-4. DTC Screen Example 3-14
Figure 3-5. Menu Display Modes 3-16
Figure 3-6. Menu 1 3-17
Figure 3-7. Menu 2 3-20
Figure 3-8. Menu 2.2 3-20
Figure 3-9. Menu 3 3-21
Figure 3-10. Menu 3.1 3-21
Figure 3-11. Menu 3.2 3-22
Figure 3-12. Menu 4 3-24
Figure 3-13. Exiting Menu Mode 3-24
Figure 3-14. Modifying Setpoints 3-25
Figure 3-15. Normal Program Control Flowchart 3-30
Figure 3-16. ECU Power Support Program Control 3-30
Figure 3-17. Power Up/Reset State Diagram 3-31
Figure 3-18. Ready State Diagram 3-32
Figure 3-19. Pulsing State Diagram 3-33
Figure 3-20. Connecting State Diagram 3-33
Figure 3-21. Pre-Start State Diagram 3-34
Figure 3-22. Cranking State Diagram 3-34
Figure 3-23. Resting State Diagram 3-35
Figure 3-24. Running State Diagram 3-35
Figure 3-25. Cooling State Diagram 3-36
Figure 3-26. Shutting Down State Diagram 3-36
Figure 3-27. Alarm State Diagram 3-37

List of Tables

Table 3-1. Operating Parameters Obtained from CAN Interface 3-4
Table 3-2. Diagnostic Information Transmitted Over CAN Interface 3-5
Table 3-3. Front Panel Adjustable Settings 3-26
Table 3-4. Normal Output Relay Matrix 3-31
Table 3-5. Output Relay Matrix with ECU Support 3-31

SECTION 3 • FUNCTIONAL DESCRIPTION

GENERAL

KDGC-2001 Digital Genset Controllers use microprocessor based technology to provide integrated engine-generator set control, protection, and metering in a single package. Microprocessor based technology allows for exact measurement, setpoint adjustment and timing functions. Refer to the following paragraphs for the KDGC-2001 functional description.

Circuit functional description is divided into *Inputs*, *Microprocessor*, *Outputs*, *Phone Modems* and *Software*. Circuit functions illustrated in Figure 3-1 are described in the following paragraphs.

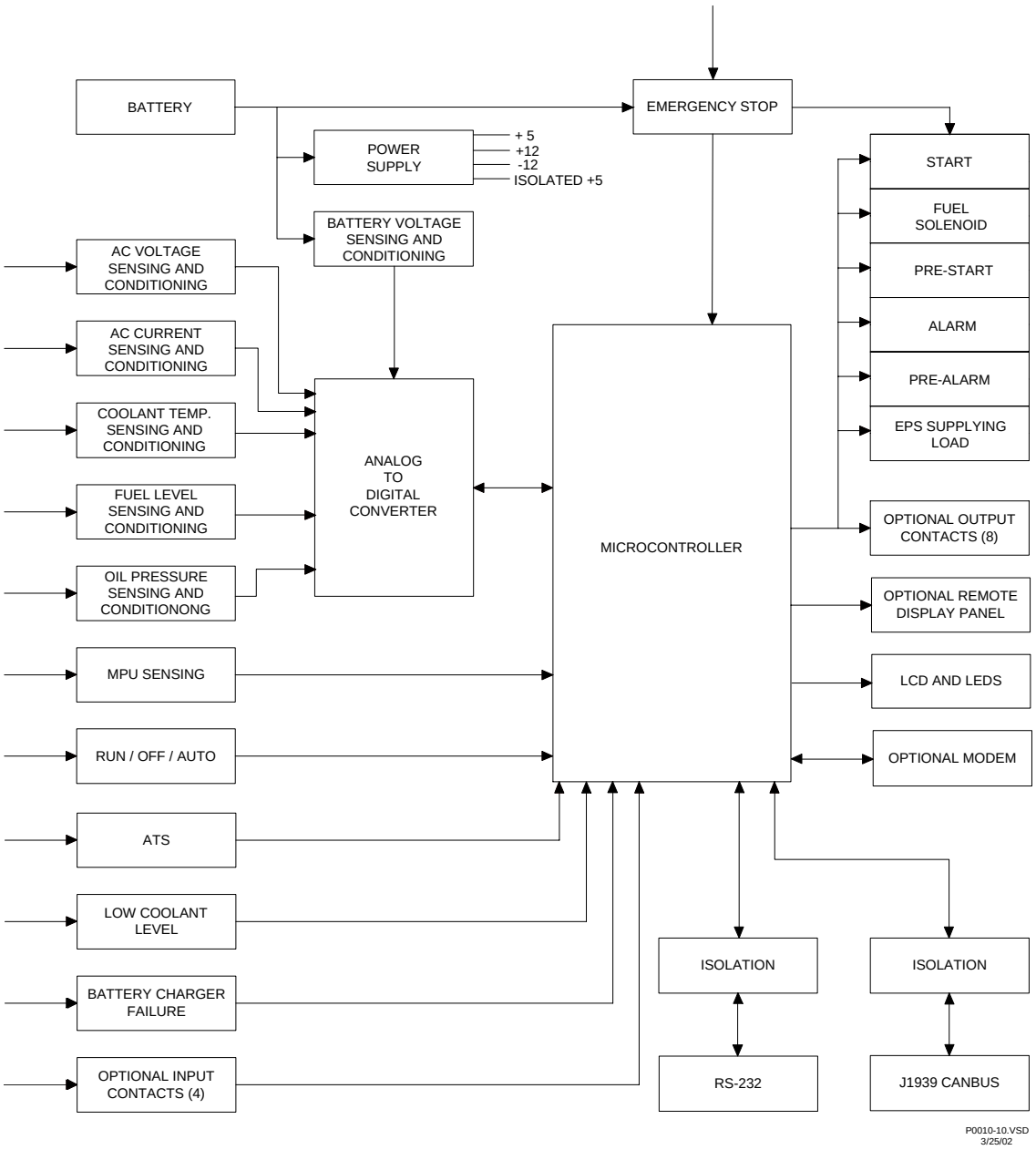

Figure 3-1. KDGC-2001 Function Block Diagram

INPUTS

There are nine types of inputs to the KDGC-2001 Controller. They are:

- Battery operating voltage
- Contact sensing inputs
- Transducer inputs
- Speed signal inputs
- Voltage inputs
- Current inputs
- RS-232 serial communication
- CAN interface for J1939 communication
- Programmable contact sensing inputs

The following paragraphs describe these inputs.

Battery Operating Voltage

Required operating voltage is a nominal 12 or 24 Vdc. Operating voltage may be in the range of 8 to 32 Vdc. An internal switching power supply uses the battery voltage to generate a +12 Vdc, -12 Vdc, +5 Vdc, a stable +5 Vdc reference and an isolated +5 Vdc. The isolated +5 Vdc supply is for the RS-232 serial communications port. The dc reference voltage is for internal use.

Battery operating voltage is conditioned (filtered and reduced to a level suitable for microprocessor input) and sensed by the microprocessor.

Contact Sensing Inputs

Four external contact sensing inputs (Emergency Stop, Automatic Transfer Switch, Low Coolant Level, and Battery Charger Failure) provide external stimulus to the KDGC-2001 Controller.

Emergency Stop

This input is continuously monitored. An open circuit indicates an Emergency Stop. Opening this circuit removes power from all output relays.

Automatic Transfer Switch

This input is continuously monitored by the microprocessor and is used to start the engine when in the auto mode. A closed contact initiates the start sequence.

Low Coolant Level

This input is continuously monitored by the microprocessor. When battery (–) potential is connected to this input, a low coolant level is indicated.

Battery Charger Failure

This input is continuously monitored by the microprocessor. When battery (–) potential is connected to this input, a battery charger failure is indicated.

Transducer Inputs

The KDGC-2001 transducer inputs are programmable. This gives the user the flexibility to choose the transducer to be used in a particular application. For details on programming, see Section 6, *BESTCOMS Software, Programmable Senders*.

Coolant Temperature

A current of less than 20 milliamperes is provided to the coolant temperature transducer (sending unit). The developed voltage is measured and scaled for use by the internal circuitry. This input is not used when the CAN interface is enabled.

Oil Pressure

A current of 30 milliamperes is provided to the oil pressure transducer. The developed voltage is measured and scaled for use by the internal circuitry. This input is not used when the CAN interface is enabled.

Fuel Level And Fuel Leak

A current of less than 20 milliamperes is provided to the fuel level transducer. The developed voltage is measured and scaled for use by the internal circuitry. The internal fuel level transducer failure circuitry and the fuel leak detector also use this input. An open circuit across these terminals will indicate a failed fuel level transducer. A resistance of less than five ohms is used to indicate either a failed fuel level transducer or a fuel leak detector contact closure.

Sender Return Connection

It is important to connect the sender return terminal to battery minus at the engine chassis of the genset. The purpose of this connection is to isolate the analog senders voltage signals from the voltage drop that exists in the power leads between the KDGC-2001 and the engine's battery. This voltage drop will adversely affect the accuracy of the readings from the analog senders. Because this input provides some resistive isolation with respect to battery minus within the KDGC-2001, leaving it disconnected will cause considerable error in the readings from the analog senders and the battery voltage. The input should also not be jumpered back to battery minus at the KDGC-2001 as this will defeat the purpose of having a separate connection

NOTE

The sender return terminal must be connected to battery minus back at the engine chassis to minimize the error in the analog sender and battery voltage readings.

Speed Signal Inputs

Generator Voltage

The voltage from the monitored generator is scaled and conditioned for use by the internal circuitry as a speed signal source circuitry. Differential amplifiers provide isolation for these inputs.

Magnetic Pickup

The voltage from the magnetic pickup is scaled and conditioned for use by the internal circuitry as a speed signal source. This input is not used when the CAN interface is enabled.

Voltage Inputs

Monitored generator voltages are sensed and scaled to levels suitable for use by the internal circuitry. Differential amplifiers provide isolation for these inputs. Internal circuitry selects line-to-line, line-to-neutral or single-phase values. Menu selections by the user determine these switch settings.

Current Inputs

Monitored generator currents are sensed and scaled to values suitable for use by the internal circuitry. Internal current transformers provide isolation. Two taps on the primary of these transformers accommodate either one or five ampere circuits.

Serial Communication/Ethernet Adaptor Port

This optically-isolated RS-232 port enables communication between the DCG-1000 and a PC running BESTCOMS software or a serial server connected to an Ethernet network.

CAN Interface for J1939 Communications

A controller area network (CAN) is a standard interface that allows communication between multiple controllers on a common network using the SAE J1939 message protocol. Applications using an engine-driven generator set controlled by a KDGC-2001, may also have an Engine Control Unit (ECU). The CAN interface allows the ECU and a KDGC-2001 to communicate. The ECU will report operating information to the KDGC-2001 via the interface. Operating parameters and diagnostic information, if supported, are decoded and displayed for monitoring.

The primary use of the CAN interface is to obtain engine operating parameters for monitoring speed, coolant temperature, oil pressure, coolant level and engine hours without the need for direct connection to individual senders. These parameters are transmitted via the CAN interface at preset intervals. See the column labeled Update Rate in Table 3-1 for transmission rates. This information can also be transmitted upon user request.

Table 3-1. Operating Parameters Obtained from CAN Interface

Parameter	Metric Units	English Units	Update Rate	Decimal Place	SPN#
ECU Parameters Menu – Main Menu					
Throttle Position	%	%	50 ms	10th	91
Percent Load at Current RPM	%	%	50 ms	None	92
Actual Engine Percent Torque	%	%	Engine speed dependent	None	513
Engine Speed	rpm	rpm	Engine speed dependent	None	190
Injection Control Pressure	MPa	psi	500 ms	None	164
Injector Metering Rail Pressure	MPa	psi	500 ms	None	157
Total Engine Hours	hours	hours	Requested 1.5 s	100th	247
Trip Fuel	liters	gallons	Requested 1.5 s	None	182
Total Fuel Used	liters	gallons	Requested 1.5 s	None	250
Engine Coolant Temperature	°C	°F	1 s	None	110
Fuel Temperature	°C	°F	1 s	None	174
Engine Oil Temperature	°C	°F	1 s	10th	175
Engine Intercooler Temperature	°C	°F	1 s	None	52
Fuel Delivery Pressure	kPa	psi	500 ms	10th	94
Engine Oil Level	%	%	500 ms	10th	98
Engine Oil Pressure	kPa	psi	500 ms	10th	100
Coolant Pressure	kPa	psi	500 ms	10th	109
Coolant Level	%	%	500 ms	10th	111
Fuel Rate	liter/hr	gal/hr	100 ms	100th	183
Barometric Pressure	kPa	psi	1 s	10th	108
Ambient Air Temperature	°C	°F	1 s	10th	171
Air Inlet Temperature	°C	°F	1 s	None	172
Boost Pressure	kPa	psi	500 ms	None	102
Intake Manifold Temperature	kPa	psi	500 ms	None	105
Air Filter Differential Pressure	kPa	psi	500 ms	100th	107
Exhaust Gas Temperature	°C	°F	500 ms	10th	173
Electrical Potential Voltage	volts	volts	1 s	10th	168
Battery Potential Voltage Switched	volts	volts	1 s	10th	158
Oil Filter Differential Pressure	kPa	psi	1 s	10th	99
Fuel Filter Differential Pressure	kPa	psi	1 s	None	95
Crankcase Pressure	kPa	psi	500 ms	100th	101
Engine Configuration Submenu – Press Select to enter submenu and Previous to exit submenu					
Engine Speed at Idle Point 1	rpm	rpm	5 s	None	188
Percent Torque at Idle Point 1	%	%	5 s	None	539
Engine Speed at Point 2	rpm	rpm	5 s	None	528
Percent Torque at Point 2	%	%	5 s	None	540
Engine Speed at Point 3	rpm	rpm	5 s	None	529
Percent Torque at Point 3	%	%	5 s	None	541
Engine Speed at Point 4	rpm	rpm	5 s	None	530
Percent Torque at Point 4	%	%	5 s	None	542
Engine Speed at Point 5	rpm	rpm	5 s	None	531
Percent Torque at Point 5	%	%	5 s	None	543
Engine Speed at High Idle Point 6	rpm	rpm	5 s	None	532
Gain (Kp) of Endspeed Governor	%/rpm	%/rpm	5 s	100th	545
Reference Engine Torque	N•m	lb/ft	5 s	None	544
Maximum Momentary Engine Override Speed Point 7	rpm	rpm	5 s	None	533
Maximum Momentary Engine Override	s	s	5 s	10th	534

Parameter	Metric Units	English Units	Update Rate	Decimal Place	SPN#
Time Limit					
Requested Speed Control Range Lower Limit	rpm	rpm	5 s	None	535
Requested Speed Control Range Upper Limit	rpm	rpm	5 s	None	536
Requested Torque Control Range Lower Limit	%	%	5 s	None	538

WARNING!

When the CAN interface is enabled, the unit will ignore the following sender inputs: oil pressure, coolant temperature and magnetic pickup.

The diagnostic function obtains the diagnostic condition of the transmitting electronic components. The KDGC-2001 will receive an unsolicited message of the currently active diagnostic trouble codes (DTC). Previously active DTCs are available upon request. Active and previously active DTCs can be cleared on request. See Table 3-2 for details on diagnostic messaging.

Table 3-2. Diagnostic Information Transmitted Over CAN Interface

Parameter	Transmission Repetition Rate
Active Diagnostic Trouble Code	1 s
Lamp Status	1 s
Previously Active Diagnostic Trouble Code	On request
Request to Clear Previously Active DTCs	On request
Request to Clear Active DTCs	On request

DTCs are reported in coded diagnostic information which include the Suspect Parameter Number (SPN), Failure Mode Identifier (FMI) and Occurrence Count (OC). All parameters have an SPN and are used to display or identify the items for which diagnostics are being reported. The FMI defines the type of failure detected in the subsystem identified by an SPN. The problem may not be an electrical failure but may be a subsystem condition needing to be reported to a technician or operator. The OC contains the number of times a fault has gone from active to previously active.

Programmable Contact Sensing Inputs

If the KDGC-2001 has the auxiliary input and output option, there are four programmable contact sensing inputs. Each input is designed to accept a normally open contact. The contact is connected between the input and battery minus. These inputs may be configured through the BESTCOMS PC program as an alarm, pre-alarm or neither. When the contact sensing input is closed, the front panel display shows the name of the closed input if it was programmed as alarm or pre-alarm. If neither is programmed, no indication is given on the front panel display. Programming the input as neither is useful when a call to a pager without an alarm or pre-alarm is necessary or to close additional contacts using the auxiliary outputs.

Each input also has a programmable name which may be up to eight characters in length. The default names are AUX IN 1, AUX IN 2, AUX IN 3 and AUX IN 4.

MICROPROCESSOR

Software stored in the programmable flash memory controls how the KDGC-2001 functions and makes all decisions based on programming and system inputs. Formulas that are used to determine the various calculated quantities and circuits related to microprocessor inputs are described in the follow paragraphs.

Formulas

For line-to-line (VL-L) voltage sensing:

$$V_{AB} = \sqrt{V_A{}^2 + V_A \times V_B + V_B{}^2}$$
$$V_{BC} = \sqrt{V_B{}^2 + V_B \times V_C + V_C{}^2}$$
$$V_{CA} = \sqrt{V_C{}^2 + V_C \times V_A + V_A{}^2}$$

For three-phase voltage sensing configurations:

kVA: $kVA_A = (V_{AB} \times I_A) \div (1000\ \sqrt{3})$
$kVA_B = (V_{BC} \times I_B) \div (1000\ \sqrt{3})$
$kVA_C = (V_{CA} \times I_C) \div (1000\ \sqrt{3})$
$kVA_{TOTAL} = KVA_A + KVA_B + KVA_C$

kW: $kW_A = kVA_A \times PF$
$kW_B = kVA_B \times PF$
$kW_C = kVA_C \times PF$
$kW_{TOTAL} = kVA_{TOTAL}\ PF$

PF (power factor) equals the cosine of the measured angle between voltage and current zero-crossings.

For single-phase (V_A to V_B) voltage sensing configurations:

kVA: Total kVA $= kVA_A + kVA_B$
$= (V_{AN} \times I_A \div 1000) + (V_{BN} \times I_B \div 1000)$

kW: Total kW $= kW_A + kW_B$
$= (kVA_A \times PF) + (kVA_B \times PF)$

Related Circuits

Zero Crossing Detection

The zero crossing of the A phase voltage or A to B line voltage and the B phase current is detected and used to calculate the phase angle between the current and voltage. This zero crossing is also used to measure the generator frequency.

Signal Switching

Solid state switches under microprocessor control, select the voltage or current sensing signal that is applied to the rms-to-dc converter. The resulting signal is sent to the twelve-bit analog-to-digital converter where it is digitized for use by the microprocessor.

RMS-to-DC Converter

Scaled and conditioned signals representing the voltage and current sensing inputs are used as the input to the rms to dc converter. This converter output is a dc level proportional to the rms value of the input.

Analog-to-Digital Converter

Signals from the rms to dc converter, coolant temperature sensing input, fuel level sensing input and the oil pressure sensing input are digitized by the twelve-bit, analog-to-digital converter. The digitized information is stored in random access memory (RAM). This information is used by the microprocessor for all metering and protection functions.

OUTPUTS

Each output relay is controlled by the microprocessor and the emergency stop contact input. All outputs are electrically isolated from each other and from the internal circuitry. Two outputs (start and fuel solenoid) are associated with engine cranking functions. The remaining four outputs (Figure 3-1) are associated with the following conditions: pre-start, supplying load, pre-alarm and alarm.

Emergency Stop Contact Input Interaction

When the emergency stop contact input is open, all output contacts open. When the emergency stop contact input is closed and a signal is given by the microprocessor, the output contacts close

Remote Display Panel

When the KDGC-2001 is combined with the RDP-110, many of the alarm and pre-alarm conditions are indicated remotely. The following alarms are indicated by LED's and an audible alarm on the RDP-110: low coolant level, high coolant temperature, low oil pressure, overcrank, overspeed, emergency stop, fuel leak/fuel level sender failure and engine sender unit failure. The following pre-alarms are also displayed on the RDP-110: high coolant temperature, low coolant temperature, low oil pressure, low fuel level, battery overvoltage, weak battery and battery charger failure. In addition to these alarms and pre-alarms, the RDP-110 also indicates when the RUN/OFF/AUTO switch is not in auto and when the Emergency Power System (EPS) is supplying load.

Optional Auxiliary Outputs

If the KDGC-2001 has the auxiliary input and output option, there are eight programmable output contacts. These outputs may be programmed through the BESTCOMS PC program to close when any of the selected inputs is active. Multiple outputs may be programmed to close when a single input is active. Also, multiple inputs may be programmed to close a single output.

TELEPHONE MODEMS

Two modems with dial-in, dial-out capability are available as optional equipment on the KDGC-2001. The standard modem is rated from 0°C to 50°C (32°F to 122°F). The extended operating temperature range modem is rated from -40°C to 70°C (–40°F to 158°F). With the optional phone modem, the KDGC-2001 can dial out to inform a pager that an alarm or pre-alarm condition has occurred. Up to four phone numbers can be dialed in sequence until an answer is received. The supplied modem is registered with the FCC under Part 68.

Type of Service

The KDGC-2001 is designed to be used on standard device telephone lines and connects to the telephone line by means of a standard jack called the USOC RJ-11C. Connection to telephone company provided coin service (central office implemented systems) is prohibited. Connection to party lines service are subject to state tariffs.

Telephone Company Procedures

The goal of the telephone company is to provide you with the best service it can. In order to do this, it may occasionally be necessary for them to make changes in their equipment, operations or procedures. These changes might affect your service or the operation of your equipment, the telephone company will give you notice, in writing, to allow you to make any changes necessary to maintain uninterrupted service.

In certain circumstances, it may be necessary for the telephone company to request information from you concerning the equipment which you have connected to your telephone line. Upon request of the telephone company, provide the FCC registration number and the ringer equivalence number (REN); both items are listed on the label on the modem on the rear of the KDGC-2001. The sum of all of the RENs on your telephone lines should be less than five in order to assure proper service from the telephone company. In some cases, a sum of five may not be usable on a given line.

If Problems Arise

If any of your telephone equipment is not operating properly, you should immediately remove it from your telephone line because it may cause harm to the telephone network. If the telephone company notes a problem, they may temporarily disconnect service. When practical, they will notify you in advance of this disconnection. If advance notice is not feasible, you will be notified as soon as possible. When you are notified, you will be given the opportunity to correct the problem and be informed of your right to file a complaint with the FCC. Contact your telephone company if you have any questions about your telephone line.

Cellular Communications

Data transfer over an analog cellular system may be optimized when the MNP10-EC (Microcom Network Protocol, Class 10, Enhanced Cellular) protocol is used. The modem connected to the PC must be capable of supporting this protocol. It is also necessary to invoke this protocol with the appropriate initialization string. This initialization string may be stored independently with each of the phone book entries. (Refer to the Section 6, *BESTCOMS Software*.) When MNP10-EC protocol is enabled on the landline modem, the KDGC-2001 modem will automatically use MNP10-EC. This allows the user to enable and disable the MNP10-EC protocol by simply changing the initialization string. An example of a typical initialization strings is as follows:

AT &F\N5-SEC=1,18-K1M1L2

AT	Informs the modem that commands are being sent to it.
&F	Forces factory default settings.
\N5	Forces connection using MNP10-EC. (\N2 would allow the protocol to be negotiated as LAPM or MNP.)
-SEC=1,18	Enables MNP10-EC protocol, and sets the transmit level at –18dBm
-K1	Enables V.42 LAPM to MNP10 conversion.
M1	Enables speaker during dial-up. (M2 would leave speaker on all of the time, and M0 turns the speaker off.)
L2	Sets the speaker volume. (L0 is off, and L3 is the maximum value.)

The required initialization string will differ between different makes and models of modems. Please consult the modem's manual for the proper initialization strings.

MNP10-EC adjusts the communication parameters during cellular connection and transmission to provide quicker initial connection, to provide maximum throughput and to avoid disconnects. MNP10-EC recognizes typical signal impairments caused by the cellular environment and quickly recovers from the impairments. Typical impairments for which MNP10-EC compensates include frequent hand-offs, dropouts, call inference, fading and echo. Performance is significantly improved when the modems on each end of the connection support MNP10-EC.

SOFTWARE

Software embedded in the KDGC-2001 controls all aspects of device functionality. This comprises power-up initialization, front panel set up and configuration, input contact status monitoring, protective function detection and annunciation, system parameter monitoring, output contact status control and RS-232 serial communications.

Power-Up Sequence

When battery power is first applied, the KDGC-2001 initiates a power up sequence. The version of embedded software is displayed on the LCD and the memory is checked. Then all configuration data stored in non-volatile EEPROM is brought into main memory. Immediately after this, the LCD display begins in the Normal mode. When the Normal mode is displayed, all enabled functions are activated and input monitoring begins.

NOTE

The run-time counter, kilowatt-hour meter and maintenance timers are updated in volatile memory once per minute. Updated values are saved to nonvolatile memory when the Auto/Off/Run mode of operation is changed. Additionally, while the engine is running, the run time counter is saved every 15 minutes and the kilowatt-hour meter is saved every eight hours. If the battery power source fails during operation, these values are not updated and the changes made after the last save operation are irretrievably lost.

Watchdog Timer

The purpose of the watchdog timer is to re-initialize the microprocessor and restart the software execution process in the event that normal software execution is interrupted. During normal software execution, the watchdog timer is periodically reset to prevent it from expiring and initiating a software reset.

When the watchdog timer expires, the unit re-initializes itself as it normally does on power-up. If the user was logged into BESTCOMS when a watchdog timeout occurs, then BESTCOMS will lose communication with the KDGC-2001. The user must close and reopen communications. If the watchdog times out five times between power cycles, then the unit will lock-up in a safe mode. The LCD of a locked up unit will read: "WATCHDOG FAILURE," "CYCLE POWER TO RESET." As long as the unit has not gone into the safe mode, BESTCOMS will notify the user of a watchdog timeout next time he or she logs onto the unit. After a watchdog timeout, the unit will return to the mode ("Run" but only if engine speed is still above crank disconnect speed; "Off" or "Auto") it was last in before the reset occurred, unless it has gone into the safe mode. The user must cycle the power to get out of safe mode. When in safe mode, the user cannot log on with BESTCOMS and the engine is shut off.

Cool Down Timer

In the Auto mode, this feature allows the engine to cool down by running unloaded for a programmed period of time. The cool down period of 0 to 60 minutes is programmed from the BESTCOMS software in one-minute increments. This cool down period will start when the load is removed or when the ATS contact opens. If load is removed from the generator prior to the ATS contact opening, the timer will start and continue to count while the ATS contact opens. At the time of the ATS contact opening, the remaining time of the cool down timer will be used and once the total remaining time is consumed, the engine will shutdown. A setting of 0 is used when no cool down period is desired.

Speed Source Failure

This function monitors the signal from the speed signal source selected from the BESTCOMS software. If only one source is selected and the signal from that source is lost, an alarm and a shutdown occurs and SPEED SIGNAL SOURCE FAILURE is displayed on the LCD. If both magnetic pickup and generator voltage are selected as speed signal sources and the magnetic pickup unit (MPU) fails, the KDGC-2001 will switch to using generator voltage as the speed signal source and the LCD display will alternate between displaying the run time and MPU on the display. If the generator voltage signal also fails, an alarm and shutdown occurs. This function checks for the presence of a signal only; it is not a sender continuity check.

Cranking

The KDGC-2001 is programmable for either cycle crank or continuous crank. If cycle cranking is chosen, the number of crank cycles allowed before the system shuts down can be selected. A crank cycle is defined as 5 to 15 seconds of crank followed by an equal number of seconds of rest, selectable in 1-second increments. The maximum number of cycles the KDGC-2001 will allow is 7. If NFPA 100 Level 1 is chosen, the number of crank cycles is 5.

If a delay to crank feature has been selected, the KDGC-2001 will close the pre-start contact upon receipt of a start command. The pre-start contact is programmable to either remain energized or to drop out after the delay has expired.

Figure 3-2 illustrates one normal and four abnormal engine starts (crank curves).

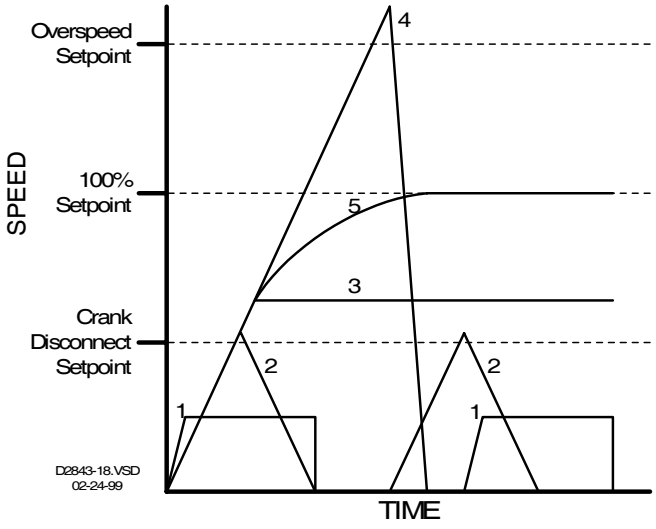

Figure 3-2. Normal and Abnormal Engine Crank Curves

Abnormal Start Curve One

This curve shows the typical cycle crank when a start signal is received. When the signal is received, the fuel solenoid and start contacts close and engine speed begins to increase. The fuel solenoid and start contacts remain closed until the crank cycle time is met. The start contact will open if the prime mover speed increases past the crank disconnect speed setting. The fuel solenoid contact remains closed above the crank disconnect speed. If the prime mover fails to start after the prescribed time, the rest timer is started and the starter solenoid and fuel solenoid contacts are opened. The crank cycle is repeated

Katolight Service - Master Repair Manual - Page 2084

until the prime mover speed increases past the crank disconnect setpoint or the programmed number of crank cycles has been met and an overcrank condition occurs.

Abnormal Start Curve Two

This curve shows a failure to start condition. The prime mover reaches the crank disconnect setpoint but fails to start. If this condition occurs, the KDGC-2001 has cranked the engine through one cycle of crank time and the engine is coasting down to a stop. After the rest period time has expired, the KDGC-2001 will continue to cycle crank for the remainder of the crank cycles or the engine starts.

Abnormal Start Curve Three

This curve shows an engine start but the engine fails to reach rated speed. If this condition occurs, the start contact opens and the engine continues to run until it is turned off.

Abnormal Start Curve Four

This curve shows a typical overspeed occurrence. If this condition occurs, the engine, upon reaching the overspeed setpoint, will be shut down by the KDGC-2001 opening the fuel solenoid contact and annunciate an alarm by closing the alarm contact.

Normal Start Curve Five

This curve shows a typical normal start and run condition. When this occurs, the start contact opens after the prime mover passes through the crank disconnect speed setpoint. The engine speed increases until the 100% setpoint is reached.

Alarms

Reset of all alarms can only be done locally by setting the Auto/Off/Run switch to the OFF position. All alarm conditions will light a red LED (labeled Alarm) along with displaying the condition on the LCD screen and sounding the optional audible alarm. All alarms have a common Form A contact. When an alarm condition occurs, the display indicates the cause of the alarm, the Form A Alarm contact closes and the fuel solenoid contact opens which shuts down the engine.

Overcrank Alarm

When the crank timer times out, cranking terminates. At that time, the common alarm contacts close and the LCD displays the message OVERCRANK and the current overcrank setting.

Overspeed Alarm

If the engine speed exceeds the overspeed value programmed by the BESTCOMS software and continues until the programmed delay time expires, an overspeed alarm occurs. At that time, the common alarm contact closes and the LCD displays the message OVERSPEED and the current overspeed setting.

High Coolant Temperature Alarm

If the engine coolant temperature exceeds the level programmed by the BESTCOMS software, an alarm occurs. At that time, the common alarm contact closes and the LCD displays the message, HIGH COOLANT TEMP and the current high coolant temperature setting.

Low Oil Pressure Alarm

If the oil pressure decreases below the low oil pressure alarm setting programmed by the BESTCOMS software, an alarm occurs. At that time, the common alarm contact closes and the LCD displays the message, LOW OIL PRESSURE and the current low oil pressure alarm setting.

Engine Sender Fault Alarm

If a failure of an engine sender (transducer) is enabled by the BESTCOMS software and a failure occurs, an alarm occurs. At that time, the common alarm contact closes and the LCD displays the message SENDER FAILURE and the failed sender. If a short circuit is detected across the fuel level transducer/fuel leak detector input, the message SENDER FAIL/FUEL LEAK is displayed.

Low Fuel Level Alarm

If the fuel level decreases below the low fuel level alarm setting programmed by the BESTCOMS software, an alarm occurs. At that time, the common alarm contact closes and the LCD displays the message, LOW FUEL LEVEL and the current low fuel level alarm setting.

Low Coolant Level Alarm

This alarm stops the engine when a loss of coolant is detected via the low coolant level contact input. At that time, the common alarm contact closes and the LCD displays the message LOW COOLANT LEVEL.

CAN Bus Alarm

A CAN Bus Failure annunciation may be enabled only when the CAN interface is enabled. The CAN interface is configurable from BESTCOM. When configured to pre-alarm, annunciation occurs when CAN communication is lost either by the unit becoming disconnected from the ECU or the ECU malfunctioning. If CAN communication is lost and the annunciation is configured as an alarm, then a normal alarm sequence will occur, including a CANBUS FAILURE ALARM message that appears on the display

Pre-Alarms

All pre-alarms are reset by correcting the cause of the pre-alarm. All pre-alarm conditions illuminate the red alarm LED with a 50% duty cycle at a frequency of 0.5 hertz and sounding the optional audible alarm at the same rate. All pre-alarms have a common Form A contact. The LCD displays all pre-alarms in the following manner: Low Oil Pressure, High Coolant Temperature and Battery Voltage pre-alarms are shown on the main display with their current values alternately flashing with a dark field at a frequency of 0.5 hertz and a duty cycle of 50%. All other pre-alarms are individually displayed in sequence using the alternate main display mode whereby each pre-alarm value is alternately flashed with a dark field at a frequency of 0.5 hertz and a duty cycle of 50%. All pre-alarmed parameters are displayed in this manner before non-pre-alarmed parameters. Using a PC and the BESTCOMS software, the customer can program the audible pre-alarms to be OFF or ON. The audible pre-alarms can be reset by the Alarm Silence pushbutton.

Magnetic Pickup (MPU) Failure Pre-Alarm

If the speed signal source is selected for MPU/GEN (Magnetic Pickup, Generator Frequency) via BESTCOMS, a pre-alarm will be annunciated when the MPU fails.

High Coolant Temperature Pre-Alarm

If engine coolant temperature increases above the high coolant temperature pre-alarm setpoint programmed by the BESTCOMS software for the programmed delay time, a pre-alarm occurs.

Low Coolant Temperature Pre-Alarm

If engine coolant temperature decreases below the low coolant temperature pre-alarm setpoint programmed by the BESTCOMS software for the programmed delay time, a pre-alarm occurs.

Weak Battery Pre-Alarm

If the battery voltage drops below 60% of the nominal voltage for more than 2 seconds during engine cranking, a pre-alarm occurs. The message, WEAK BATTERY is displayed in the alternate display mode and is reset by scrolling through the alternate display.

Low Battery Voltage Pre-Alarm

If the battery voltage decreases below the low battery voltage value programmed by the BESTCOMS software, a pre-alarm occurs.

Battery Overvoltage Pre-Alarm

If the battery voltage exceeds the battery over voltage level programmed by the BESTCOMS software, a pre-alarm occurs.

Low Fuel Level Pre-Alarm

If the fuel level decreases below the low fuel level pre-alarm value programmed by the BESTCOMS software, a pre-alarm occurs.

Engine Overload Pre-Alarm

If the engine load exceeds the engine overload level pre-alarm value programmed by the BESTCOMS software, a pre-alarm occurs.

Battery Charger Failure Pre-Alarm

If a battery charger failure is detected via the battery charger fail contact input, a pre-alarm occurs.

Maintenance Pre-Alarm

When the next scheduled maintenance timer reaches zero hours, a pre-alarm occurs. After the required maintenance is performed, the pre-alarm can be cleared either from BESTCOMS or the front panel. To clear the pre-alarm from the front panel, go to the alternate display mode and scroll to the screen that displays HRS TO NEXT SERVICE. Pressing the Select/Enter button while on this screen will clear the maintenance pre-alarm and reset the maintenance timer back to its programmed starting value.

Active DTC Pre-Alarm

When CAN Bus and DTC Support are both enabled, an "active DTC" pre-alarm may be enabled from BESTCOMS to announce the presence of a current condition that is causing a diagnostic trouble code to be sent to the KDGC-2001 from the ECU.

CAN Bus Pre-Alarm

A CAN Bus Failure annunciation may be enabled only when the CAN interface is enabled. The CAN interface is configurable from BESTCOM. When configure to alarm, annunciation occurs when CAN communication is lost either by the unit becoming disconnected from the ECU or the ECU malfunctioning. If CAN communication is lost and the annunciation is a pre-alarm, a screen will appear in the Alternate Display stating the pre-alarm and will be viewable only when the pre-alarm is in progress.

DISPLAY OPERATION

The KDGC-2001 has three display modes: Normal, Alternate, and Menu. Pressing the **Display Toggle** pushbutton when in the Normal display mode allows the user to scroll through the Normal, Alternate, and menu display modes. DTC mode, when enabled, may be selected while in the Alternate mode. Figure 3-3 shows the top level of each display mode.

Normal Mode

This mode displays the engine and generator parameters as described by the labeling on the front panel. Pressing the **Phase Toggle** pushbutton when the engine is running scrolls through the voltage and current measurements that are available.

Alternate Display Mode

After pressing the **Display/Toggle** pushbutton to enter the alternate display mode, pressing the **Raise/Scroll** or **Lower/Scroll** pushbutton allows the user to scroll through the alternate display mode screens.

Quantities are displayed in the following order.

- Oil pressure
- Coolant temperature
- Fuel level
- Battery voltage
- Total kilowatt load
- Hours to next service
- Generator A-B voltage
- Generator B-C voltage (3-phase sensing)
- Generator C-A voltage (3-phase sensing)
- Generator A-N voltage (except 3-phase L-L sensing)
- Generator B-N voltage (except 3-phase L-L sensing)
- Generator C-N voltage (3-phase L-N sensing only)
- Generator phase A, B, and C currents
- Phase A kVA
- Phase B kVA
- Phase C kVA (3-phase sensing)
- Total kVA
- Generator phase A kilowatts
- Generator phase B kilowatts
- Generator phase C kilowatts (3-phase sensing)
- Generator total kilowatt-hours
- Generator power factor

- Generator frequency
- Total run hours
- Engine speed
- Unit identification number
- Coolant level (CAN interface enabled)
- Active DTC list (CAN interface and diagnostics enabled)
- Previous DTC list (CAN interface and diagnostics enabled)

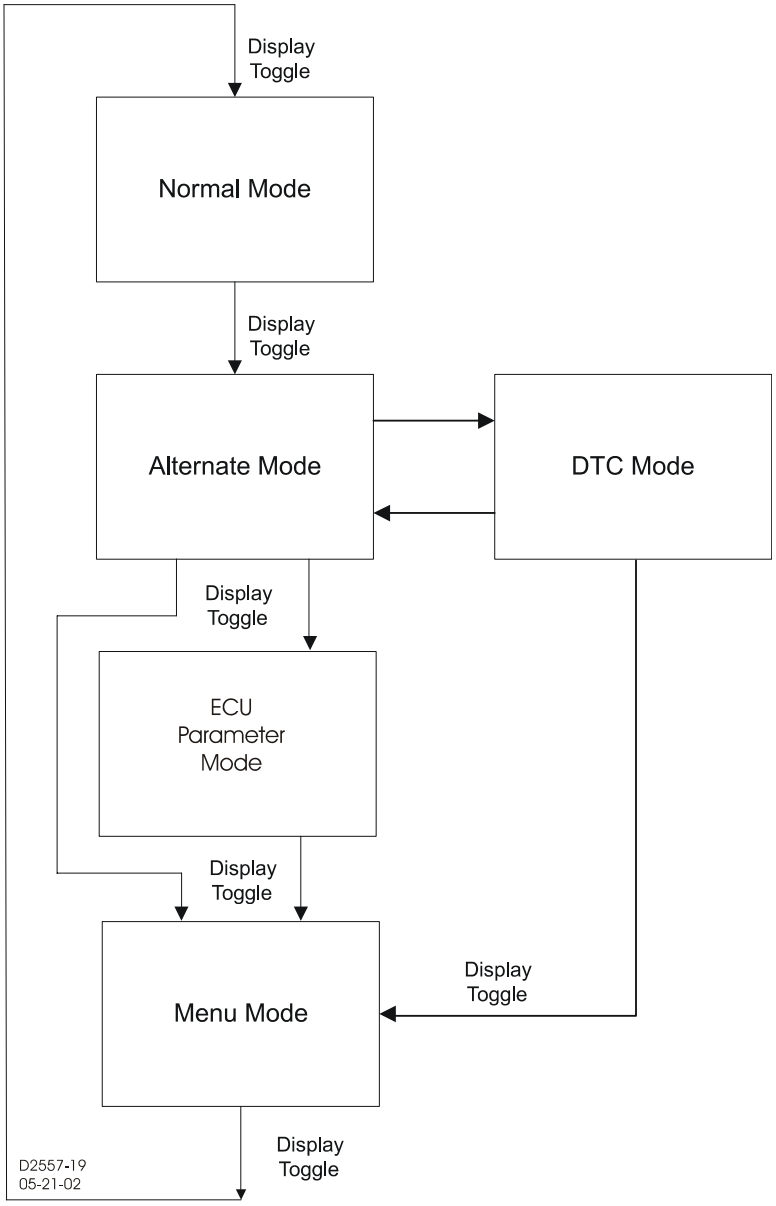

Figure 3-3. Top Level of Display Modes

Diagnostic Trouble Codes (DTC) Display Mode

Access to the Diagnostic Trouble Codes (DTCs) screens can be gained in the Alternate Display mode. The DTCs are the last two screens in the Alternate Display list. DTC screens are only available when the CAN interface and DTCs are enabled.

If there are no DTCs communicating with the unit, the **Select/Enter** button will have no affect, and "ACTIVE DTC LIST" and "NO DTC(S) TO VIEW" will be displayed. If there is at least one DTC communicating with the unit, the **Select/Enter** button will be an active input, and "ACTIVE DTC LIST" and "PRESS SELECT TO VIEW" will be displayed.

Pressing **Select/Enter** when “ACTIVE DTC LIST” and “PRESS SELECT TO VIEW” is displayed will put the KDGC-2001 in DTC Mode. The next screen to appear will display the diagnostic lamp status information obtained from the ECU. One of five possible lamp status messages will be displayed. The list of possible messages in decreasing order of priority includes:

1. "ENGINE STOP LAMP LIT"
2. "WARNING LAMP LIT"
3. "MALFUNCTION LAMP LIT"
4. "PROTECT LAMP LIT"
5. "NO LAMP IS LIT"

Only one lamp status will be displayed from the front panel, the one with the highest priority that is currently true. The user may use BESTCOMS to view the status of all lamps. An example of the lamp status screen is shown below.

```
"CURRENT LAMP STATUS"
"ENGINE STOP LAMP LIT"
```

To be notified that a lamp status exists, the pre-alarm for Active DTCs must be enabled (from BESTCOMS). When one or more Active DTCs exists in the ECU, a lamp status should exist indicating the severity of the combined DTCs. After the pre-alarm is annunciated (through LED, Horn, and/or Dial-Out, the user will know to check the Lamp Status, Active DTCs in the system, and what relationship DTCs have with the parameters. (From the front panel, use the “ECU Parameters” menu to check the relationship. From BESTCOMS, hover the mouse over the DTC to see it’s related parameter).

To view the list of currently active DTCs, press **Raise/Scroll**. The next screen to appear will display the first DTC, the number of DTCs, the Suspect Parameter Number (SPN), the Failure Mode Indicator (FMI) and the Occurrence Count (OC).

NOTE: Always refer to the engine’s manual for the meaning of SPN and FMI combinations, *especially* for proprietary DTC descriptions.

In the DTC screen example of Figure 3-4, the first DTC of five is being displayed, the SPN is 111 (Coolant Level), the FMI is 1 (low voltage from the sender, thus we have Low Coolant Level), and the OC is 2 (the unit has had a low coolant level twice before). Refer to the engine manufacturer’s CAN Interface documentation for specific descriptions of codes.

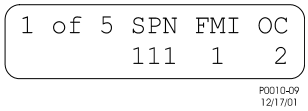

Figure 3-4. DTC Screen Example

After viewing the last DTC, screen 5 of 5, "VIEWED ALL ACTIVE" and "USE SELECT TO CLEAR" will be displayed. (The same applies when viewing previous DTCs.)

Pressing **Select/Enter** to clear the DTCs (active or previous) will result in one of four responses:

1. A positive acknowledgement which causes the following message to be displayed: "ACTIVE DTC(S) HAVE BEEN ERASED."
2. A negative acknowledgement which causes the following message to be displayed: "ERROR - NEGATIVE ACK" and "CANNOT ERASE DTC(S)."
3. A timeout for acknowledgement (when approximately two seconds have passed with CAN working and no positive or negative acknowledgement has been received). The following message will be displayed: "ERROR - ACK TIME OUT" and "CANNOT ERASE DTC(S)."
4. A CAN communications failure (CAN is disconnected or ECU is not working properly). The following message will be displayed: "ERROR - DISCONNECTED" and "CANNOT ERASE DTC(S)."

After viewing the response, the only way to back out of the screen is to press **Previous**. The user is then taken back to the Alternate Display Mode. Pressing **Display Toggle** will take the user to the Menu Mode screens. This also applies when viewing previous DTCs.

If the user is viewing active DTCs, and there is a change to active DTCs, then a message is displayed saying "DTC(S) HAVE CHANGED" and "PRESS PREVIOUS." The only way to back out of the screen is to press **Previous**. The user is then taken back to the Alternate Display Mode. Pressing **Display Toggle** will take the user to the Menu Mode screens. This also applies when viewing previous DTCs.

ECU Parameters Mode

The *ECU Parameters Menu* appears between the Alternate Display and Menu Mode when pressing **Display Toggle** and showcases parameters metered from the ECU. This menu is only viewable when

J1939 Communications are enabled. Only parameters related to GenSet applications are metered from the ECU and displayed here. A sub-menu is also accessible within this Menu for viewing the *Engine Configuration* parameters.

If a parameter is never sent after communications are established or the ECU has sent information notifying the KDGC-2001 that the parameter is not supported (non-applicable), then the parameter's screen will be hidden and skipped when scrolling from screen to screen in the "ECU Parameters" menu.

If a DTC is "associated" to one of the parameters, then the screens will work like Pre-Alarm screens from the Alternate Display. When scrolling through the menu, the user is taken straight to the new "DTC-related" screens first. The "DTC-related" screen will then blink while alternating between the parameter's value and the DTC information.

NOTE: If no ECU support is required, then parameters are only updated within the KDGC-2001 unit when "pulsing" the ECU and while the engine is "running."

The following list includes all the engine system monitoring parameters read from the ECU (if supported) in the order in which they appear when pressing **Raise/Scroll**, having started from the ECU Parameters menu:

- Throttle Position
- Percent Load at Current RPM
- Actual Engine Percent Torque
- Injection Control Pressure
- Injector Metering Rail Pressure
- Injector Metering Rail Pressure
- Engine Speed*****
- Total Engine Hours*****
- Trip Fuel
- Total Fuel Used
- Engine Coolant Temperature*****
- Fuel Temperature
- Engine Oil Temperature
- Engine Intercooler Temperature
- Fuel Delivery Pressure
- Engine Oil Level
- Engine Oil Pressure*****
- Coolant Pressure
- Coolant Level
- Fuel Rate
- Barometric Pressure
- Ambient Air Temperature
- Air Inlet Temperature
- Boost Pressure
- Intake Manifold Temperature
- Air Filter Differential Pressure
- Exhaust Gas Temperature
- Electrical Potential (Voltage)*
- Battery Potential (Voltage), Switched
- Oil Filter Differential Pressure
- Fuel Filter Differential Pressure
- Crankcase Pressure
- Engine Configuration (Sub-Menu)

* This parameter may be monitored either directly by the KDGC-2001 itself or by the KDGC-2001 and the appropriate analog sender when the CAN bus/J1939 interface is disabled.

To start viewing the engine configuration parameters read from the ECU, press **Select/Enter** at the Engine Configuration sub-menu. The following list includes parameters in the order in which they appear when pressing **Raise/Scroll**:

- Engine Speed at Idle, Point 1
- Percent Torque at Idle, Point 1
- Engine Speed at Point 2

- Percent Torque at Point 2
- Engine Speed at Point 3
- Percent Torque at Point 3
- Engine Speed at Point 4
- Percent Torque at Point 4
- Engine Speed at Point 5
- Percent Torque at Point 5
- Engine Speed at High Idle, Point 6
- Gain (KP) of the Endspeed Governor
- Reference Engine Torque
- Maximum Momentary Engine Override Speed, Point 7
- Maximum Momentary Override Time Limit
- Requested Speed Control Range Lower Limit
- Requested Speed Control Range Upper Limit
- Requested Torque Control Range Lower Limit
- Requested Torque Control Range Upper Limit

Menu Mode

After pressing the **Display Toggle** pushbutton twice to begin the Menu display mode (first time selects the Alternate mode), pressing **Select/Enter** begins the next level of menus. Pressing the **Raise/Scroll** or **Lower/Scroll** pushbutton (Figure 3-5) allows the user to scroll through the menu display mode screens. Pressing the **Display Toggle** pushbutton returns the display to the Normal mode.

Menu 1

Menu 1 is the alarm and pre-alarm menu. Pressing **Select/Enter** (Figure 3-6) from this menu begins the 1.x menu level. Pressing **Raise/Scroll** and **Lower/Scroll** from this menu scrolls through the 1.x menu level.

Menu 1.1

Menu 1.1 displays the overspeed alarm. Pressing **Select/Enter** begins the 1.1.1 level of menus and displays the function activation level. Pressing **Select/Enter** displays the setting. This is not adjustable from the front panel. Pressing **Previous** goes back to the 1.1.1 level.

Pressing **Raise/Scroll** or **Lower/Scroll** begins the 1.1.2 function activation delay level of menus. Pressing **Select/Enter** displays the activation delay time once the level has been exceeded. This is not adjustable from the front panel.

Pressing **Previous** twice goes back to the 1.1 level. Pressing **Raise/Scroll** goes to the 1.2 menu level. Pressing **Lower/Scroll** goes to the 1.13 menu level.

Menu 1.2

Menu 1.2 displays the high coolant temperature alarm. Pressing **Select/Enter** begins the 1.2.1 level of menus and displays the function activation level. Pressing **Select/Enter** displays the setting. This is not adjustable from the front panel.

Pressing **Previous** goes back to the 1.2.1 level. Pressing **Raise/Scroll** or **Lower/Scroll** begins the 1.2.2 function activation delay level of menus. Pressing **Select/Enter** displays the activation delay time once the engine crank disconnect speed is exceeded. This is not adjustable from the front panel.

Pressing **Previous** twice goes back to the 1.2 level. Pressing **Raise/Scroll** goes to the 1.3 menu level Pressing **Lower/Scroll** goes to the 1.1 menu level.

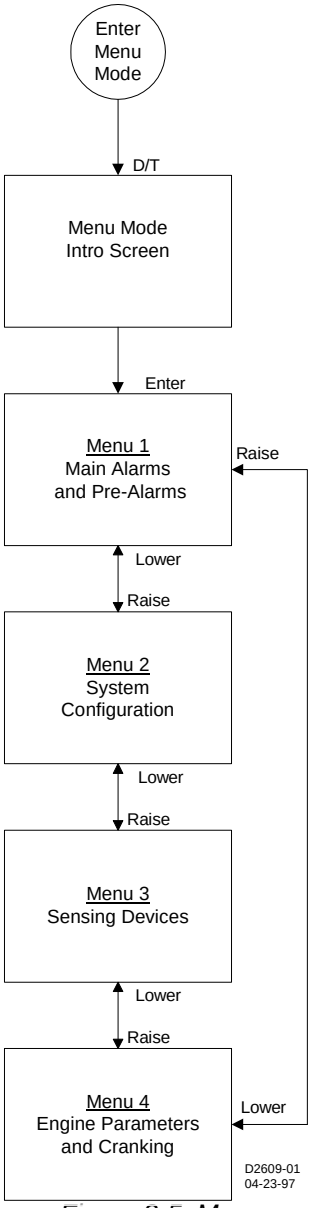

Figure 3-5. Menu Display Modes

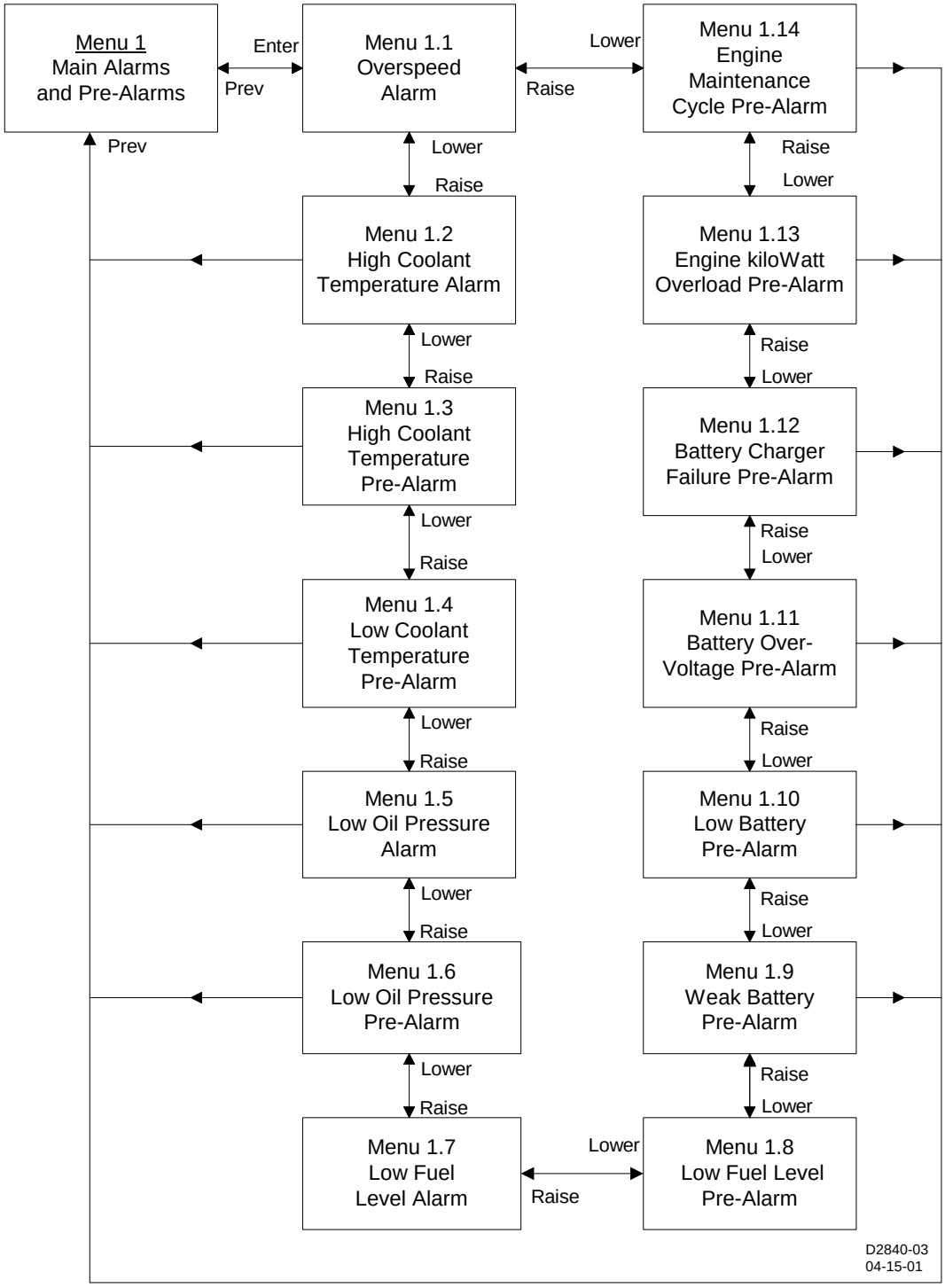

Figure 3-6. Menu 1

Menu 1.3

Menu 1.3 displays high coolant temperature pre-alarm. Pressing **Select/Enter** begins the 1.3.1 level of menus and displays the function activation level. Pressing **Select/Enter** displays the setting. This is not adjustable from the front panel.

Pressing **Previous** returns to the 1.3.1 level. Pressing **Raise/Scroll** or **Lower/Scroll** begins the 1.3.2 function activation delay level of menus. Pressing **Select/Enter** displays the activation delay time once the engine crank disconnect speed is exceeded. This is not front panel adjustable.

Pressing **Previous** twice goes back to the 1.3 level. Pressing **Raise/Scroll** goes to the 1.4 menu level Pressing **Lower/Scroll** goes to the 1.2 menu level.

Menu 1.4

Menu 1.4 displays low coolant temperature pre-alarm. Pressing **Select/Enter** begins the 1.4.1 level of menus and displays the function activation level. Pressing **Select/Enter** displays the setting. This is not adjustable from the front panel.

Pressing **Previous** goes back to the 1.4.1 level. Pressing **Raise/Scroll** or **Lower/Scroll** begins the 1.4.2 function activation delay level of menus. Pressing **Select/Enter** displays the activation delay time once the level has been exceeded. This is not adjustable from the front panel.

Pressing **Previous** twice goes back to the 1.4 level. Pressing **Raise/Scroll** goes to the 1.5 menu level Pressing **Lower/Scroll** goes to the 1.3 menu level.

Menu 1.5

Menu 1.5 displays low oil pressure alarm. Pressing **Select/Enter** begins the 1.5.1 level of menus and displays the function activation level. Pressing **Select/Enter** displays the setting. This is not adjustable from the front panel.

Pressing **Previous** goes back to the 1.5.1 level. Pressing **Raise/Scroll** or **Lower/Scroll** begins the 1.5.2 function activation delay level of menus. Pressing **Select/Enter** displays the activation delay time once the engine crank disconnect speed is exceeded. This is not adjustable from the front panel.

Pressing **Previous** twice goes back to the 1.5 level. Pressing **Raise/Scroll** goes to the 1.6 menu level Pressing **Lower/Scroll** goes to the 1.4 menu level.

Menu 1.6

Menu 1.6 displays low oil pressure pre-alarm. Pressing **Select/Enter** begins the 1.6.1 level of menus and displays the function activation level. Pressing **Select/Enter** displays the setting. This is not adjustable from the front panel.

Pressing **Previous** goes back to the 1.6.1 level. Pressing **Raise/Scroll** or **Lower/Scroll** begins the 1.6.2 function activation delay level of menus. Pressing **Select/Enter** displays the activation delay time once the engine crank disconnect speed is exceeded. This is not adjustable from the front panel.

Pressing **Previous** twice goes back to the 1.6 level. Pressing **Raise/Scroll** goes to the 1.7 menu level Pressing **Lower/Scroll** goes to the 1.5 menu level.

Menu 1.7

Menu 1.7 displays low fuel level alarm. Pressing **Select/Enter** begins the 1.7.1 level of menus and displays the function activation level. Pressing **Select/Enter** displays the setting. This is adjustable from the front panel.

Pressing **Previous** goes back to the 1.7.1 level. Pressing **Raise/Scroll** or **Lower/Scroll** begins the 1.7.2 function activation delay level of menus. Pressing **Select/Enter** displays the activation delay time once the level has been exceeded. After pressing **Raise/Scroll** or **Lower/Scroll**, the user will be instructed to enter the user key code. After entering the user key code followed by pressing **Select/Enter** twice, the setting will be adjustable with the **Raise/Scroll** and **Lower/Scroll** keys. After the desired setting has been selected, press **Select/Enter** to save the new settings.

Pressing **Previous** twice goes back to the 1.7 level. Pressing **Raise/Scroll** goes to the 1.8 menu level Pressing **Lower/Scroll** goes to the 1.6 menu level.

Menu 1.8

Menu 1.8 displays low fuel level pre-alarm. Pressing **Select/Enter** begins the 1.8.1 level of menus and displays the function activation level. Pressing **Select/Enter** displays the setting. This is adjustable from the front panel.

Pressing **Previous** goes back to the 1.8.1 level. Pressing **Raise/Scroll** or **Lower/Scroll** begins the 1.8.2 function activation delay level of menus. Pressing **Select/Enter** displays the activation delay time once the level has been exceeded. After pressing **Raise/Scroll** or **Lower/Scroll**, the user will be instructed to enter the user key code. After entering the user key code followed by pressing **Select/Enter** twice, the setting will be adjustable with the **Raise/Scroll** and **Lower/Scroll** keys. After the desired setting has been selected, press **Select/Enter** to save the new settings.

Pressing **Previous** twice goes back to the 1.8 level. Pressing **Raise/Scroll** goes to the 1.9 menu level Pressing **Lower/Scroll** goes to the 1.7 menu level.

Menu 1.9

Menu 1.9 displays weak battery pre-alarm. Pressing **Select/Enter** begins the 1.9.1 level of menus and displays the function activation level. Pressing **Select/Enter** displays the setting. This is not adjustable from the front panel.

Pressing **Previous** goes back to the 1.9.1 level. Pressing **Raise/Scroll** or **Lower/Scroll** begins the 1.9.2 function activation delay level of menus. Pressing **Select/Enter** displays the activation delay time once the level has been exceeded. This is not adjustable from the front panel.

Pressing **Previous** twice goes back to the 1.9 level. Pressing **Raise/Scroll** goes to the 1.10 menu level Pressing **Lower/Scroll** goes to the 1.8 menu level.

Menu 1.10

Menu 1.10 displays low battery pre-alarm. Pressing **Select/Enter** begins the 1.10.1 level of menus and displays the function activation level. Pressing **Select/Enter** displays the setting. This is not adjustable from the front panel.

Pressing **Previous** goes back to the 1.10.1 level. Pressing **Raise/Scroll** or **Lower/Scroll** begins the 1.10.2 function activation delay level of menus. Pressing **Select/Enter** displays the activation delay time once the level has been exceeded. This is not adjustable from the front panel.

Pressing **Previous** twice goes back to the 1.10 level. Pressing **Raise/Scroll** goes to the 1.11 menu level Pressing **Lower/Scroll** goes to the 1.9 menu level.

Menu 1.11

Menu 1.11 displays battery over voltage pre-alarm. Pressing **Select/Enter** begins the 1.11.1 level of menus and displays the function activation level. Pressing **Select/Enter** displays the setting. This is not adjustable from the front panel.

Pressing **Previous** goes back to the 1.11.1 level. Pressing **Raise/Scroll** or **Lower/Scroll** begins the 1.11.2 function activation delay level of menus. Pressing **Select/Enter** displays the activation delay time once the level has been exceeded. This is not adjustable from the front panel.

Pressing **Previous** twice goes back to the 1.11 level. Pressing **Raise/Scroll** goes to the 1.12 menu level Pressing **Lower/Scroll** goes to the 1.10 menu level.

Menu 1.12

Menu 1.12 displays battery charger failure pre-alarm. Pressing **Select/Enter** begins the 1.12.1 level of menus and displays the function activation level. Pressing **Select/Enter** displays the setting. This is not adjustable from the front panel.

Pressing **Previous** goes back to the 1.12.1 level. Pressing **Raise/Scroll** or **Lower/Scroll** begins the 1.12.2 function activation delay level of menus. Pressing **Select/Enter** displays the activation delay time once the level has been exceeded. This is not adjustable from the front panel.

Pressing **Previous** twice goes back to the 1.12 level. Pressing **Raise/Scroll** goes to the 1.13 menu level Pressing **Lower/Scroll** goes to the 1.11 menu level.

Menu 1.13

Menu 1.13 displays kilowatt overload pre-alarm. Pressing **Select/Enter** begins the 1.13.1 level of menus and displays the function activation level. Pressing **Select/Enter** displays the setting. This is not adjustable from the front panel.

Pressing **Previous** goes back to the 1.13.1 level. Pressing **Raise/Scroll** or **Lower/Scroll** begins the 1.13.2 function activation delay level of menus. Pressing **Select/Enter** displays the activation delay time once the level has been exceeded. This is not adjustable from the front panel.

Pressing **Previous** twice goes back to the 1.13 level. Pressing **Raise/Scroll** goes to the 1.14 menu level Pressing **Lower/Scroll** goes to the 1.12 menu level.

Menu 1.14

Menu 1.14 display engine maintenance pre-alarm. Pressing **Select/Enter** begins the 1.14.1 level of menus and displays the function activation level. Pressing **Select/Enter** displays the setting. This is not adjustable from the front panel.

Pressing **Previous** goes back to the 1.14.1 level. Pressing **Raise/Scroll** or **Lower/Scroll** begins the 1.14.2 function activation delay level of menus. Pressing **Select/Enter** displays the activation delay time once the level has been exceeded. This is not adjustable from the front panel.

Pressing **Previous** twice goes back to the 1.14 level. Pressing **Raise/Scroll** goes to the 1.1 menu level. Pressing **Lower/Scroll** goes to the 1.13 menu level.

Pressing **Previous** from any 1.x level menu goes to menu 1. Pressing **Raise/Scroll** goes to menu 2. Pressing **Lower/Scroll** goes to menu 3.

Menu 2

Menu 2 system configuration. Pressing **Select/Enter** from this menu (Figure 3-7) begins the 2.x level of menus. Pressing **Raise/Scroll** and **Lower/Scroll** from this menu scrolls through the 2.x levels of menus.

Menu 2.1

Menu 2.1 displays generator voltage sensing connection. Pressing **Select/Enter** begins the 2.1.1 level and displays the sensing configuration. This is not adjustable from the front panel.

Pressing **Previous** goes back to the 2.1 level. Pressing **Raise/Scroll** goes to menu 2.2. Pressing **Lower/Scroll** goes to the 2.4 menu.

Menu 2.2

Menu 2.2 displays options. Pressing **Select/Enter** (Figure 3-8) begins the 2.2.1 level and displays the speed signal source selection. This is not adjustable from the front panel.

Pressing **Previous** goes back to the 2.2 level. Pressing **Raise/Scroll** or **Lower/Scroll** goes to menu 2.2.2 and displays metric conversion.

Pressing **Select/Enter** displays the status of this feature. To change to the metric display press **Raise/Scroll** and enter the user key code followed by the **Select/Enter** key. Press **Raise/Scroll** and then **Select/Enter**. The display will indicate that the new setting has been saved. Press previous twice to go to menu 2.2. Press **Raise/Scroll** to go to menu 2.3. Press **Lower/Scroll** to go to menu 2.1.

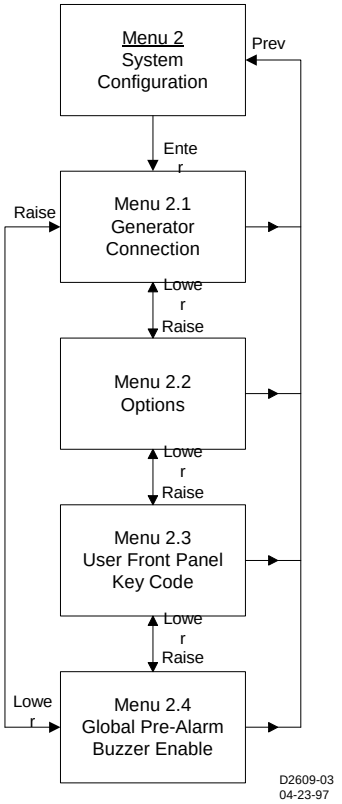

Figure 3-7. Menu 2

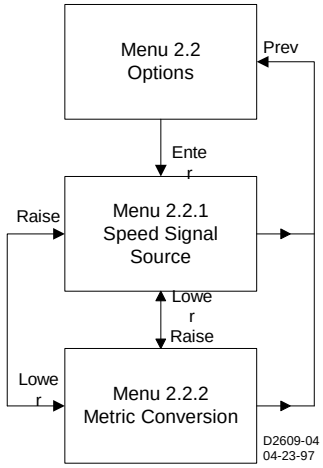

Figure 3-8. Menu 2.2

Menu 2.3

Menu 2.3 changes user key code. Press **Select/Enter** and then the user key code followed by **Select/Enter** twice. Press the key sequence for the new key code followed by **Select/Enter** twice. The

user will be asked to re-enter the new key code. After entering the new key code followed by **Select/Enter** twice, the display will indicate the new code has been saved.

Pressing **Raise/Scroll** will go to menu 2.4. Pressing **Lower/Scroll** will go menu 2.2.

Menu 2.4

Menu 2.4 pre-alarm audible alarm enable. Pressing **Select/Enter** will display the status of the pre-alarm audible alarm. This feature is not adjustable from the front panel. Pressing **Previous** will go to menu 2.4.

Pressing **Raise/Scroll** will go to menu 2.1. Pressing **Lower/Scroll** will go to menu 2.3.

Pressing **Previous** from any 2.x menu will go to menu 2. Pressing **Raise/Scroll** goes to menu 3. Pressing **Lower/Scroll** goes to menu 1.

Menu 3

Menu 3 sensing devices. Pressing **Select/Enter** (Figure 3-9) begins the 3.1 level of menus.

Menu 3.1

Menu 3.1 transformer ratios menu. Menu 3.1.1 (Figure 3-10) displays generator potential transformer primary voltage rating. Pressing **Select/Enter** displays the value. This is not adjustable from the front panel. Pressing **Previous** twice goes to menu 3.1. Pressing **Raise/Scroll** goes to menu 3.1.2. Pressing **Lower/Scroll** goes to menu 3.1.5.

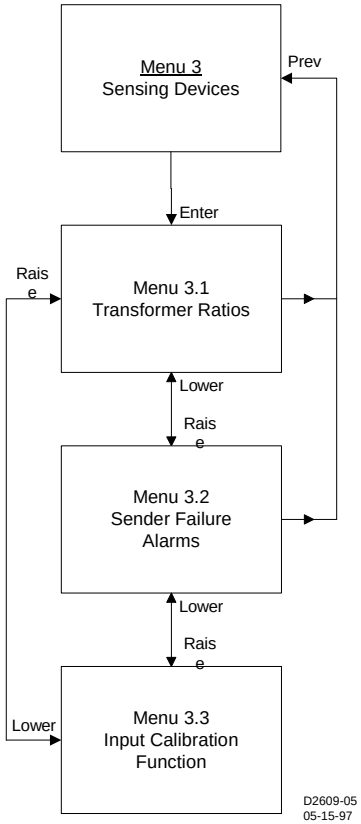

Figure 3-9. Menu 3

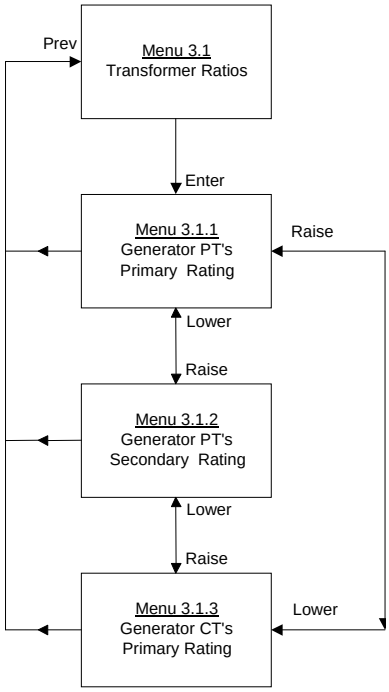

Figure 3-10. Menu 3.1

Menu 3.1.2

Menu 3.1.2 displays the generator potential transformer secondary voltage rating. Pressing **Select/Enter** displays the value. This is not adjustable from the front panel. Pressing **Previous** goes to menu 3.1. Pressing **Raise/Scroll** goes to menu 3.1.3. Pressing **Lower/Scroll** goes to menu 3.1.1.

Menu 3.1.3

Menu 3.1.3 displays the generator current transformer primary current rating. Pressing **Select/Enter** displays the value. This is not adjustable from the front panel. Pressing previous goes to menu 3.1. Pressing **Raise/Scroll** goes to menu 3.1.1. Pressing **Lower/Scroll** goes to menu 3.1.2.

Pressing **Raise/Scroll** from menu 3.1 goes to menu 3.2.

Menu 3.2

Menu 3.2 sender failure alarm menu. Pressing **Select/Enter** (Figure 3-11) begins menu 3.2.1

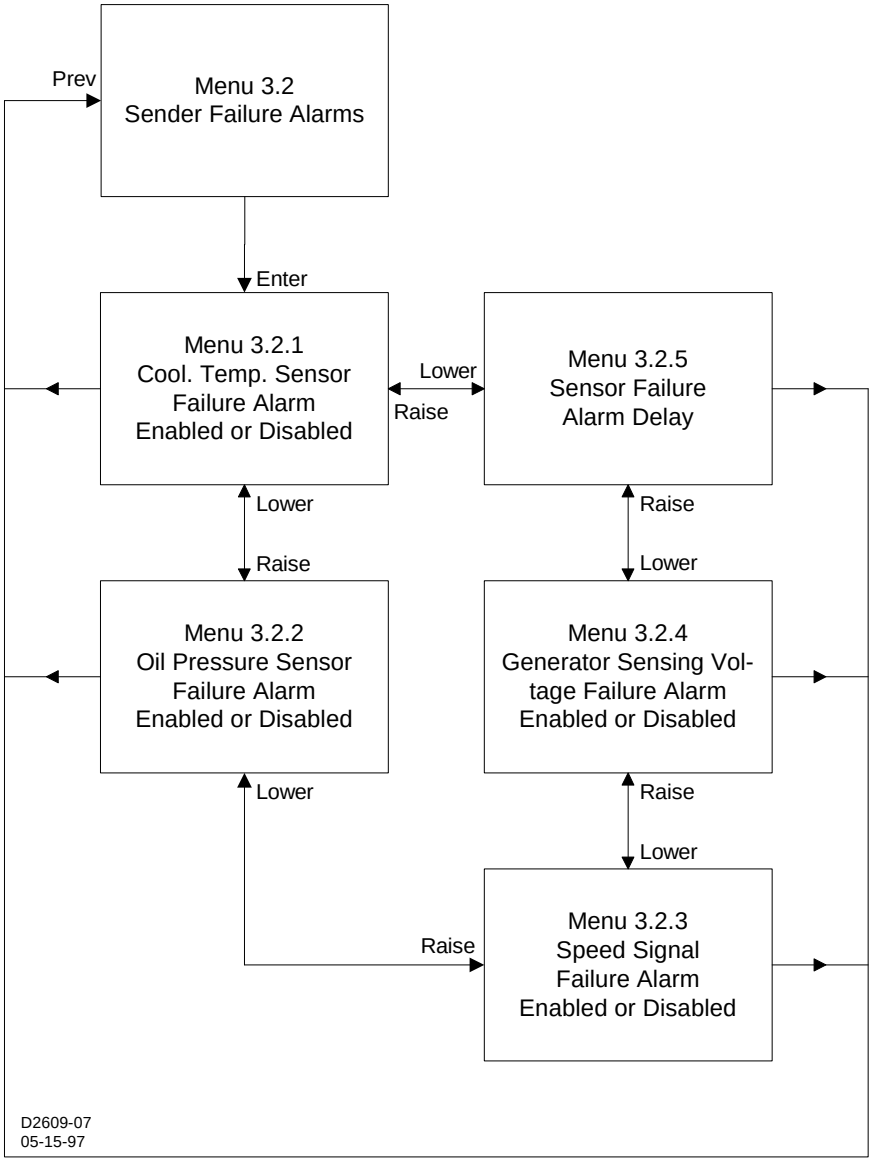

Figure 3-11. Menu 3.2

Menu 3.2.1

Menu 3.2.1 displays coolant temperature sensor failure alarm. Pressing **Select/Enter** displays the status of this alarm. This is not adjustable from the front panel. Pressing **Previous** goes to menu 3.2.1.

Pressing **Raise/Scroll** goes to menu 3.2.2. Pressing **Lower/Scroll** goes to menu 3.2.5.

Menu 3.2.2

Menu 3.2.2 displays oil pressure sensor failure alarm. Pressing **Select/Enter** displays the status of this alarm. This is not adjustable from the front panel. Pressing **Previous** goes to menu 3.2.2.

Pressing **Raise/Scroll** goes to menu 3.2.3. Pressing **Lower/Scroll** goes to menu 3.2.1.

Menu 3.2.3

Menu 3.2.3 displays speed signal failure alarm. Pressing **Select/Enter** displays the status of this alarm. This is not adjustable from the front panel. Pressing **Previous** goes to menu 3.2.3.

Pressing **Raise/Scroll** goes to menu 3.2.4. Pressing **Lower/Scroll** goes to menu 3.2.2.

Menu 3.2.4

Menu 3.2.4 displays voltage sensing failure alarm. Pressing **Select/Enter** displays the status of this alarm. This is not adjustable from the front panel. Pressing **Previous** goes to menu 3.2.4.

Pressing **Raise/Scroll** goes to menu 3.2.5. Pressing **Lower/Scroll** goes to menu 3.2.3.*Menu 3.2.5.* Menu 3.2.5 displays sensor failure alarm time delay. Pressing **Select/Enter** displays the delay time. After pressing **Raise/Scroll** or **Lower/Scroll** the user will be instructed to enter the user key code. After entering the user key code followed by pressing **Select/Enter** twice, the setting will be adjustable with the **Raise/Scroll** and **Lower/Scroll** keys. After the desired setting has been selected, press **Select/Enter** to save the new setting. Pressing **Previous** goes to menu 3.2. Pressing **Raise/Scroll** goes to menu 3.2.1. Pressing **Lower/Scroll** goes to menu 3.2.4.

Pressing **Raise/Scroll** from menu 3.2 goes to menu 3.3. Pressing **Lower/Scroll** from menu 3.2 goes to menu 3.1.

Menu 3.3

Menu 3.3 displays the input calibration function. This function is for Katolight use only. For more information contact Katolight.

Pressing **Previous** goes to menu 3. Pressing **Raise/Scroll** from menu 3 goes to menu 4. Pressing **Lower/Scroll** goes to menu 2.

Menu 4

Menu 4 (Figure 3-12) displays engine parameters and cranking. Pressing **Select/Enter** from menu 4 begins menu 4.1.

Menu 4.1

Menu 4.1 displays cool down time. After pressing **Raise/Scroll** or **Lower/Scroll**, the user will be instructed to enter the user key code. After entering the user key code followed by pressing **Select/Enter** twice, the setting will be adjustable with the **Raise/Scroll** and **Lower/Scroll** keys. After the desired setting has been selected, press **Select/Enter** to save the new setting. Pressing **Previous** goes to menu 4.1. Pressing **Raise/Scroll** goes to menu 4.2. Pressing **Lower/Scroll** goes to menu 4.7.

Menu 4.2

Menu 4.2 displays cranking mode. Pressing **Select/Enter** displays the cranking mode selected. This is not adjustable from the front panel. Pressing **Previous** goes to menu 4.2. Pressing **Raise/Scroll** goes to menu 4.3. Pressing **Lower/Scroll** goes to menu 4.1. *Menu 4.3.* Menu 4.3 displays the number of crank cycles. Pressing **Select/Enter** displays the number of crank cycles selected. This is not adjustable from the front panel. Pressing **Previous** goes to menu 4.3. Pressing **Raise/Scroll** goes to menu 4.4. Pressing **Lower/Scroll** goes to menu 4.2.

Menu 4.4

Menu 4.4 displays continuous crank time. Pressing **Select/Enter** displays the continuous crank time selected. This is not adjustable from the front panel. Pressing **Previous** goes to menu 4.4. Pressing **Raise/Scroll** goes to menu 4.5. Pressing **Lower/Scroll** goes to menu 4.3.

Menu 4.5

Menu 4.5 displays cycle crank time. Pressing **Select/Enter** displays the cycle crank time selected. This is not adjustable from the front panel. Pressing **Previous** goes to menu 4.5. Pressing **Raise/Scroll** goes to menu 4.6. Pressing **Lower/Scroll** goes to menu 4.4.

Menu 4.6

Menu 4.6 displays pre-crank delay time. After pressing **Raise/Scroll** or **Lower/Scroll**, the user will be instructed to enter the user key code. After entering the user key code followed by pressing **Select/Enter** twice, the setting will be adjustable with the **Raise/Scroll** and **Lower/Scroll** keys. After the desired setting has been selected press **Select/Enter** to save the new setting. Pressing **Previous** goes to menu 4.6. Pressing **Raise/Scroll** goes to menu 4.7. Pressing **Lower/Scroll** goes to menu 4.5.

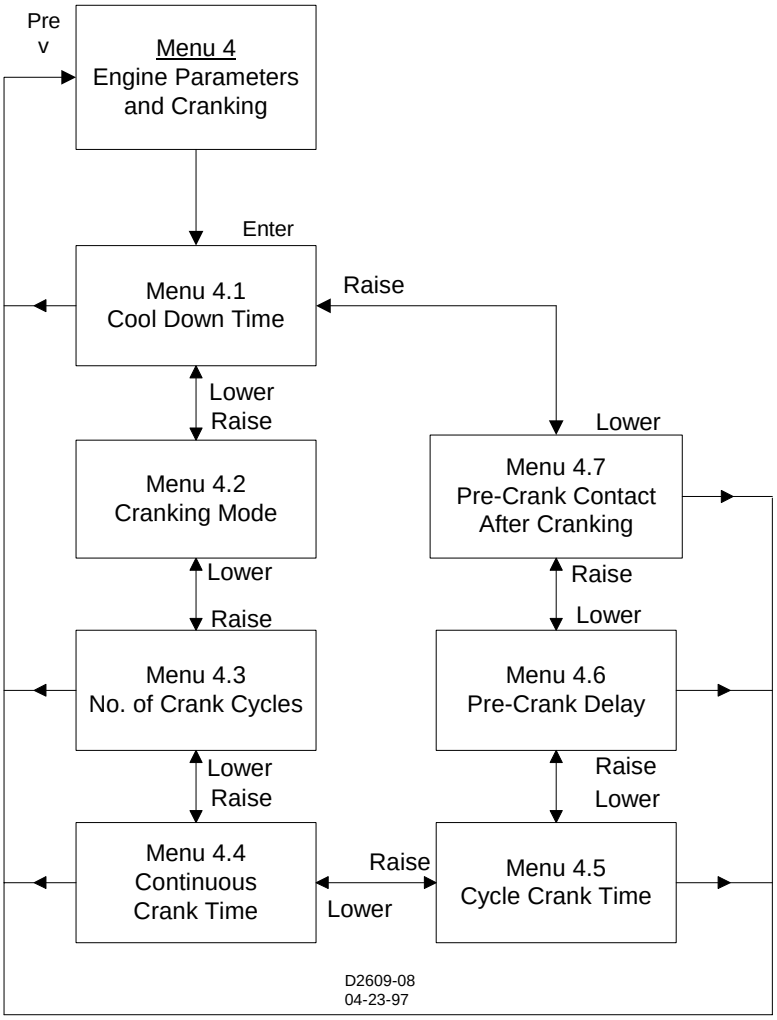

Figure 3-12. Menu 4

Menu 4.7

Menu 4.7 displays the status of the Pre-crank contact after cranking. After pressing **Raise/Scroll** or **Lower/Scroll**, the user will be instructed to enter the user key code. After entering the user key code followed by pressing **Select/Enter** twice, the setting will be adjustable with the **Raise/Scroll** and **Lower/Scroll** keys. After the desired setting has been selected, press **Select/Enter** to save the new setting. Pressing **Previous** goes to menu 4.7. Pressing **Raise/Scroll** goes to menu 4.1. Pressing **Lower/Scroll** goes to menu 4.6.

Pressing **Previous** twice goes to the normal display mode.

Exiting Menu Mode

You may exit Menu mode (from any menu level) by pressing the **Display Toggle** pushbutton (see Figure 3-13). If the **Display Toggle** pushbutton is pressed before a parameter setpoint change has been saved, then the old setpoint value is preserved.

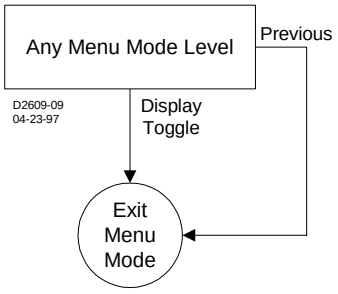

Figure 3-13. Exiting Menu Mode

NOTE

Using DISPLAY TOGGLE to exit Menu mode will save the user's place within the menu system so that the next time Menu mode is entered, the display will return to the same screen.

As an alternative, pressing **Previous** allows the user to back out of the menu mode one level at a time so that the next time menu mode is entered, the display will start at the top of the menu structure.

Modifying Setpoints

To modify an existing setpoint, press the **Select/Enter** pushbutton (Figure 3-14). Press **Raise/Scroll** or **Lower/Scroll** buttons to raise or lower the current parameter setpoint. Press the **Select/Enter** pushbutton to save the modified setpoint value or press the **Previous** pushbutton to exit the parameter setting screen without changing the value.

Once in the menu mode, the first time an attempt is made to change a setting that is front panel adjustable, the user will be prompted to enter the key code. Upon successful entry of the key code, the user may modify any of the adjustable settings without re-entering the key code during the current menu mode session. The only exception to this is changing the key code itself. Changing the key code always requires entry of the existing key code. Also, whether the key code is actually changed or not, any further changes to other settings after that will require the key code to be entered once again. Leaving the Menu mode after an editing session automatically terminates the editing privilege.

Press the **Display Toggle** pushbutton to exit the menu mode.

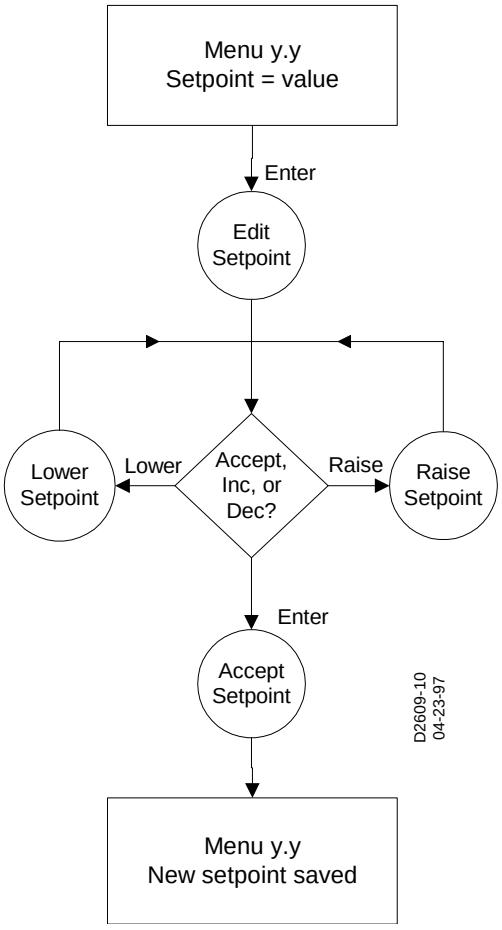

Figure 3-14. Modifying Setpoints

Key Code

The KDGC-2001 is delivered with a key code consisting of the following pushbutton sequence.

1. Raise/Scroll
2. Lower/Scroll
3. Select/Enter
4. Previous
5. Display Toggle
6. Select/Enter
7. Select/Enter

The key code can be changed by accessing the CHANGE KEYCODE screen of Menu 2. Observe the following guidelines when changing the key code.

- Allowable key code pushbuttons are Raise/Scroll, Lower/Scroll, Select/Enter, Previous, Display Toggle, Phase Toggle, Alarm Silence, and Lamp Test.
- A key code entry must be followed by two presses of the Select/Enter pushbutton.
- A key code can consist of one to eight presses of the allowable key code pushbuttons.
- A key code cannot contain consecutive presses of the Previous pushbutton.

Front Panel Adjustable Parameters

Most settings are viewable at the front panel. The settings listed in Table 3-3 can be adjusted at the front panel.

Table 3-3. Front Panel Adjustable Settings

Parameter	Setting Range, Increment
Sensor Failure Alarm Time Delay	1 to 10 s, 1s
Metric Conversion	On or Off
Low Fuel Pre-Alarm Level	10 to 100%, 1%
Low Fuel Alarm Level	2 to 50%, 1%
Pre-Crank Contact After Cranking	Open or Closed
Cool-Down Time	0 to 60 m, 1 m
Pre-Crank Time Delay	0 to 30 s, 1 s

FIRMWARE UPGRADES

Future enhancements to KDGC-2001 functionality may make a firmware upgrade desirable. Since KDGC-2001 stores its firmware in flash memory, upgrading firmware with BESTCOMS is a straightforward procedure and requires no disassembly of hardware. Refer to Section 6, *BESTCOMS Software* for detailed instructions on upgrading KDGC-2001 firmware.

WARNING!

The KDGC-2001 should be removed from service for the purpose of upgrading firmware as it will not be able to control or monitor the genset once the firmware upgrade procedure has been started.

ENGINE CONTROL UNIT (ECU) SUPPORT

Enabling of ECU Support

To enable ECU support, the user must select Enable ECU Support under the titled box CANBus/J1939 Interface of the SYST menu in BESTCOMS. After re-sending the settings, the KDGC-2001 will begin to ignore analog input for coolant temperature, oil pressure and engine speed, and it will no longer calculate engine run time. Once the KDGC-2001 establishes communications with an ECU, the engine run time, coolant level, coolant temperature, oil pressure and engine speed will be updated with the ECUs values.

Katolight Service - Master Repair Manual - Page 2101

NOTE

With Enable ECU Support selected, there is a non-programmable Coolant Level Sender Fail alarm that can annunciate when the engine is either off or running. Coolant level is only metered and displayed when Enable ECU Support is selected in BESTCOMS.

ECU Limitations

An external source cannot turn the engine off without cutting power to the ECU. Turning off power to the ECU is the only way to remove fuel from the engine, shutting it down. Different ECU manufacturers have their own rpm-setpoints for reapplying fuel to an engine. If the ECU is powered up and the engine is still spinning above 60 rpm, then the ECU will automatically turn the fuel on. Detroit Diesel, for example, has a set-point of 60 rpm.

Not being able to turn the engine off without cutting power to the ECU causes two problems. The first problem is that the only way to turn the engine off is to turn the ECU off and wait for the rpm to fall below 60 before powering the ECU back up. Otherwise, the engine will take off running. The second problem is that while the ECU is off, you can no longer meter and update coolant level, coolant temperature, oil pressure or engine speed values, effectively disabling features like low coolant temperature alarm/pre-alarm and crank control.

The KDGC-2001 Solution

The KDGC-2001 resolves ECU limitations by using timers. There are four user-programmable timers in ECU Timers under the Configure pull-down menu in BESTCOMS. In the ECU Related Time Values box you will see the following timers and their corresponding default values.

- *Pulse Cycle Time.* The time in minutes the unit waits before pulsing.
- *Response Timeout.* The time in seconds to attempt communications with the ECU when the KDGC-2001 is in the Pulsing state or Connecting state.
- *Settling Time.* The time in tenths of seconds to gather data after connecting to the ECU during the Pulsing state. This allows all the metered values to be sent and ramp up to their steady-state values. Metered values are sent out by the ECU at different rates as designated by the J1939 protocol. ECU values initially sent are low and the ECU takes time to average out its own data values.
- *Engine Shut Down.* The time in seconds to stay disconnected from the ECU when going from Running to Shut-Down before starting the first pulse. This timer should allow enough time for the engine to slow down so that when the KDGC-2001 pulses, the ECU will not start the engine.

Alarm and Pre-Alarm

If ECU communications are not established during the Connecting state or are lost during the Pre-Start, Cranking, Resting, Running or Cooling states, then a non-programmable ECU Communications Fail alarm will be annunciated. If the last pulse was unsuccessful (ECU communications was not established) then the ECU Communications Fail pre-alarm will be annunciated. The pre-alarm is only checked after the Pulsing state and is annunciated only during the Ready state.

To clear Coolant Level Alarms when the ECU Power Support is needed, the user must first correct the condition causing the alarm and then pulse the ECU to update the data. The user may remotely pulse the ECU via BESTCOMS or locally pulse the ECU by pressing the keys in the ordered sequence **Auto** to **Off** on the front panel.

Fuel Solenoid Relay

Because there is no external fuel solenoid to connect to, the fuel solenoid relay has been designated to control the ECUs power. For example, Detroit Diesel's ECU applies fuel to the engine only after the engine's rpm rises above 60. The following timers control the fuel solenoid relay when the unit is not running.

- Pulse Cycle Time - Fuel Solenoid is open.
- Response Timeout - Fuel Solenoid is closed.
- Settling Time - Fuel Solenoid is closed.
- Engine Shut Down - Fuel Solenoid is open.

NOTE

When ECU Support is enabled during Pre-Start and Resting, the fuel solenoid is closed.

Background

- RUN, OFF and AUTO are selectable through the front panel and OFF and AUTO are selectable via BESTCOMS. However, for clarity, the term AUTO will not be used in this section. Auto-Run and Auto-Off will be used instead. Auto-Run means the unit is in Auto while the ATS-Switch is closed or the user remotely started the engine via BESTCOMS. Auto-Off means the unit is in Auto while the ATS switch is open or the user remotely stopped the engine via BESTCOMS. The system configuration settings for the unit are Run, Off, Auto-Run and Auto-Off.
- If BESTCOMS remotely started the unit before a reset occurred or the user goes to Off, then the Remote Start setting from BESTCOMS is set to Stop.
- If ECU Support is enabled when the engine is running, and SysConfig goes to Off, then the unit will go to the Shut Down state. Otherwise, it will transition to the Ready state and pulse the ECU.
- If ECU Support is disabled and SysConfig goes to Off, then the unit will always transition to Ready state.

Eleven States of Operation

The KDGC-2001 supports 11 operating states. To understand how each state transitions into another, please see their corresponding flowcharts under the KDGC-2001 State Machine.

- Restart/Power-Up - The initial state.
- Ready - The KDGC-2001 is in the Off or Auto-Off mode.
- Pulsing - ECU Only - pulses (momentarily powers up) the ECU for updated information.
- Connecting - ECU Only - The system configuration just changed to Run or Auto-Run.
- Pre-Start - Closes the pre-start relay or pauses the KDGC-2001 while it is not safe to crank.
- Cranking - Cranks the engine until it is above the crank disconnect speed.
- Resting - Occurs between crank cycles and does not crank the engine.
- Running - The unit is no longer cranking and is now running.
- Cooling - Cool down running engine if a load was or is applied when going to Auto-Off mode.
- Shutting Down - ECU Only - Wait for engine to stop rotating before "pulsing."
- Alarm - Alarm was triggered. Wait for the alarm to clear.

Display Values (ECU Support Enabled)

The ECU is able to give the KDGC-2001 in-depth information about the values it sends. This makes it possible for the KDGC-2001 to display accurate information when metering these values from the ECU. After pulsing the unit, if the pulse was successful, the last values gathered when powering off the ECU are displayed until the next pulse. The following is a list of display values.

- Value-the actual value is displayed if the last pulse was successful or the engine is running.
- No Communications (abbreviated as NC)- displayed if the last pulse was unsuccessful.
- Not Applicable (abbreviated as NA)-The ECU does not monitor this data value.
- ECU Data Not Sent (abbreviated as NS)-data was not sent in the time designated by the J1939 protocol.
- Sender Failure (abbreviated as SF)-The ECU has determined a sender failure for that metered value.

ECU With An External Fuel Solenoid

The KDGC-2001 supports ECUs that have the ability to cut-off fuel from the engine without powering the ECU off. The KDGC-2001 requests engine run-time every minute to keep the ECU from going into a sleep-mode. After the Pulse Cycle Timer expires, the KDGC-2001 checks to see if ECU communications exist. If so, then the KDGC-2001 will not pulse the ECU. The same goes for Connecting, except that the KDGC-2001 remembers if it skipped the Connecting state. If it did, then the KDGC-2001 will also skip the Engine Shutting Down state when it turns off the engine.

For ECUs that have an external fuel solenoid, it is recommended that the Engine Shut Down Timer be set to its minimum value. This is so that if the KDGC-2001 temporarily loses power while running; the unit will

go straight into the Run state and go to the Shutting Down state when the unit goes to Off. It is also recommended that the Response Timeout Timer be set to its minimum value in order to set the ECU Communications Fail pre-alarm as soon as possible.

The following screens will be displayed on the front panel if the last attempt to pulse the ECU for an information update was unsuccessful.

In the Normal display mode:

```
"READY"
"NC  NC  24.0  NC"
```

In the Alternate and ECU Parameters display modes:

```
"ENGINE SPEED"
"NO COMMUNICATIONS"
```

STATE MACHINES

State Machine Description

In general, a state machine is any device that stores the status of something at a given time and can operate on input to change the status and/or cause an action or output to take place for any given change. A finite state machine can be used both as a development tool for approaching and solving problems and as a formal way of describing the solution for later developers and system maintainers. There are a number of ways to show state machines, from simple tables through graphically animated illustrations.

State Transitions

Criteria used for deciding state transitions are based on the following input events.

- The System Configuration Setting (or SysConfig)
- Analog/ECU sender data (example: Engine Speed)
- Programmable auxiliary inputs
- Switch data (Coolant Level Switch, ATS Switch, Emergency Stop Button)
- ECU-specific data (example clearing/requesting diagnostics)
- Various programmable timers (runtime, cycles, delays, time-out length)
- Auxiliary I/O settings
- Alarm settings (thresholds, enabling and timers)
- Other settings selectable through BESTCOMS.

Input events are used in deciding the following output events.

- Output relays on the KDGC-2001 control the generator and other devices connected to the KDGC-2001.
- LED output is controlled by the system configuration setting (or SysConfig), active alarm/pre-alarms and by the supplying load criteria.
- The LCD is controlled by the value of data being displayed, the state of the KDGC-2001 and by what mode the user is viewing in (Normal Mode, Alternate Display Mode, View DTCs Mode and Menu Mode).
- The horn (or buzzer) is controlled by the Alarm Silence front panel button, pressing Run or Off, and Alarm and Pre-Alarm conditions.

Normal Program Control

If an engine is not equipped with an ECU, then ECU support should be disabled for the KDGC-2001 to use Analog sender data. An engine with ECU support disabled or ECU support enabled with a constant power supply and accessible fuel solenoid will follow the normal program control flowchart. See Figure 3-15.

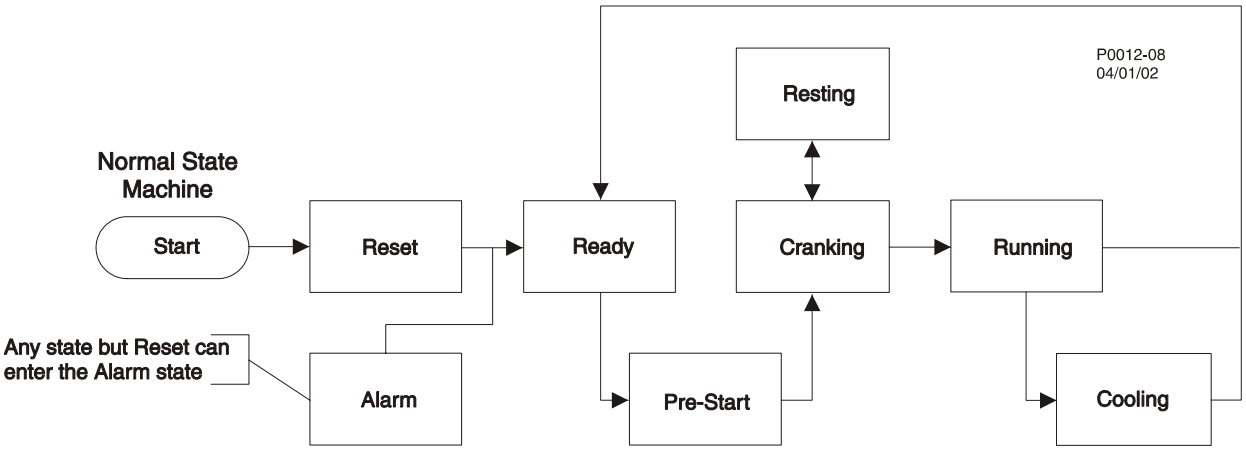

Figure 3-15. Normal Program Control Flowchart

ECU Power Support Program Control

If an engine has an ECU, then ECU Support should be enabled for the KDGC-2001 to use sender data communicated over the J1939 CANBus protocol interface from the ECU. If the engine can only be shut down by powering off the ECU, then the genset will need ECU Power Support enabled. An engine with ECU Support enabled and a need for ECU Power Support through the fuel solenoid will follow the ECU Power Support diagram. See Figure 3-16.

NOTE

ECU Power Support is not a selectable option. The KDGC-2001 will decide between using the fuel solenoid output relay or controlling the fuel to provide ECU Power Support. This smart technology is derived by doing the following:

After the Pulse Cycle Timer expires, the KDGC-2001 checks to see if ECU communications are present. If so, then the KDGC-2001 will not pulse the ECU. The same goes for Connecting, except the KDGC-2001 remembers if it skipped the Connecting state. If it did, then it will also skip the Engine Shutting Down state when the KDGC-2001 turns off the engine.

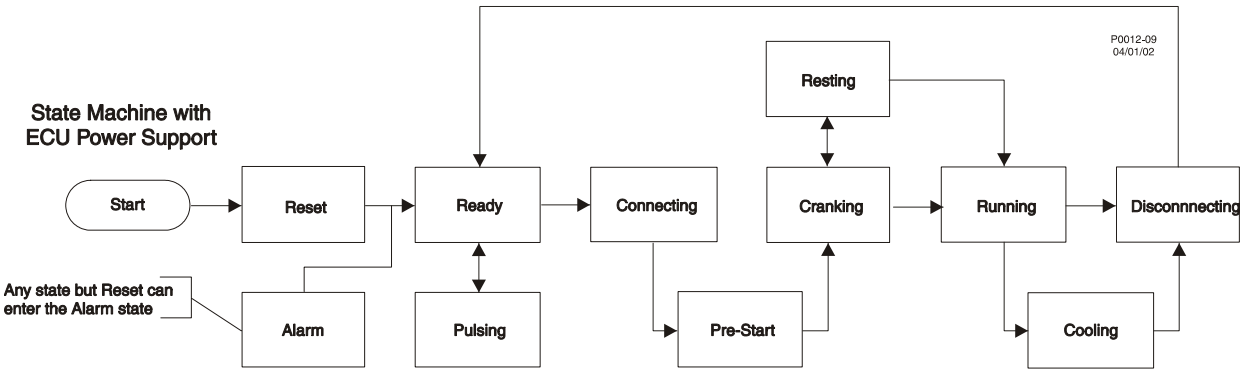

Figure 3-16. ECU Power Support Program Control

Output Relay Status

The following two tables represent the output relay status for each of the 11 states that make up the State Transition Function. The fuel solenoid relay varies between these two types of matrixes and is bolded to emphasize this. The letter O represents an open relay state and the letter C represents a closed relay state.

Table 3-4. Normal Output Relay Matrix

Relay	Current State										
	Reset	Ready	xxx	xxxx	Pre-Start	Crank	Rest	Run	Cool	xxx	Alarm
Alarm	O	O			O	O	O	O	O		C
PreStart	O	O			C	C	C	*	*		O
Starter	O	O			O	C	O	O	O		O
Fuel	O	O			O	C	O	C	C		o

Table 3-5. Output Relay Matrix With ECU Support

Relay	Current State										
	Reset	Ready	Pulse	Connect	Pre-Start	Crank	Rest	Run	Cool	Shut-down	Alarm
Alarm	O	O	O	O	O	O	O	O	O	O	C
PreStart	O	O	O	O	C	C	C			O	O
Starter	O	O	O	O	O	C	O	O	O	O	O
Fuel	**	O	C	C	C	C	C	C	C	O	O

Notes for Tables 3-4 and 3-5

* If the "Pre-Start Contact After Disconnect" is enabled from BESTCOMS, then the Pre-Start contact will always be closed during Running and Cooling. Otherwise, it will be open.

** If ECU Support is enabled and the previous SysConfig was Run or Auto-Run with the ATS-Switch closed, then close the fuel solenoid, otherwise leave it open.

Initial State - Power Up/Reset

This state begins after cycling power to the KDGC-2001, or after a software reset (i.e. a watchdog timeout) has occurred. The unit will stay in reset until 1.7 seconds have passed. This will allow time for the version number to appear on the LCD and average out enough data counts for calculating accurate analog data. During the Power Up/Reset state, if the previous system configuration (SysConfig) was Run or Auto-Run, with the ATS switch closed and ECU support is enabled, then the fuel solenoid will close. This works to keep the engine going if the unit temporarily losses power, and to gather engine speed data from the ECU to determine if it should go to Off or stay in Run.

After 1.7 seconds have expired, the old SysConfig from the last time the unit was not in reset is checked. If the old SysConfig was set to Run or Auto-Run with the ATS switch closed, then the engine speed is checked against Crank-Disconnect (the rpm value used in deciding when to disengage the starter).

If engine speed is above Crank-Disconnect:

- Then the Power Up/Reset state goes to the Running state.

Otherwise if the speed is below Crank-Disconnect:

- The unit goes to the Ready state and immediately pulses the ECU (if ECU support is enabled). If the previous SysConfig was set to RUN then the SysConfig will be set to OFF. If the previous SysConfig was set to Auto-Run (with the ATS switch closed), then the unit will still go to the Ready state. But then the Ready state will transition into the Pre-Start state and the Pre-Start state will eventually transition into the Cranking state, and so forth.

See Figure 3-17 for the Power Up/Reset State Diagram.

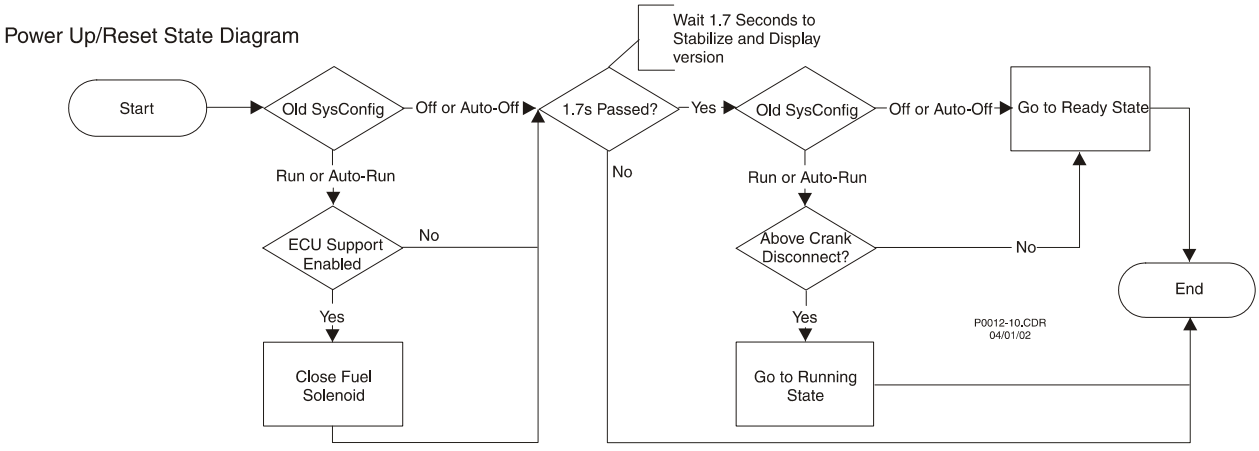

Figure 3-17. Power Up/Reset State Diagram

Ready State

The unit will be in **Ready** state when SysConfig is **Off**/**Auto-Off**. If the SysConfig changes to **Run/Auto-Run**, then it will check to see if it needs to go to the **Connecting**, **Pre-Start** or **Running** state. If **ECU Support** is selected, there are no ECU Communications and the **Pulse Cycle Timer** has expired, the **Ready** state will transition into **Pulsing**. The **Pulse Cycle Timer** can be set to expire and force a **Pulsing** state. There are three ways to force a pulse.

Forced Pulses:

- When a user logs on to a unit via BESTCOMS, if the unit is in **Ready** state, a pulse is forced to update the internal variables used to meter ECU data.
- User attempts to clear DTCs from the ECU while the KDGC-2001 is in **Ready** (therefore the ECU is probably powered off).
- Allow the user to manually force a pulse and update the internal variables. The user can do so via BESTCOMS or locally pulse the ECU by pressing the keys in the ordered sequence - **Auto** to **Off** on the front panel.

Going to Off or Auto-Off

If the unit is in the Connecting, Pre-Start, Resting or Cooling states when the unit goes to Off or Auto-Off mode, then the state will transition to the Ready state. If ECU Support is enabled, then the unit will go to the Pulsing state immediately after transitioning to the Ready state.

See Figure 3-18 for the Ready State Diagram.

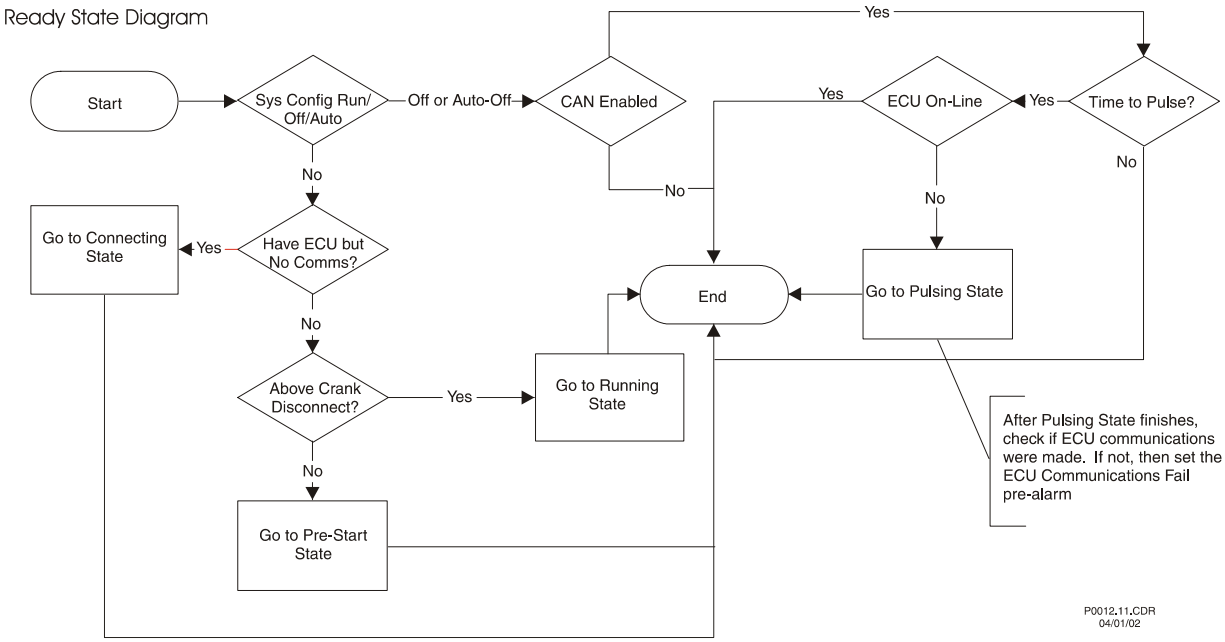

Figure 3-18. Ready State Diagram

Pulsing State

The Pulsing State follows the sequence of events shown in Figure 3-19, Pulsing State Diagram. The Pulsing state will momentarily power up the ECU to update the KDGC-2001's internal variables. Once a connection is established with the ECU, Gathering Data will appear on the screen for the duration of the settling time. During settling time, the unit processes any previous request for clearing DTCs from the ECU. The Pulsing state always transitions to the Ready state unless the SysConfig changes to Run/Auto-Run. Then it will transition to the Connecting state as a result of pulsing and will follow the ECU Power Support diagram.

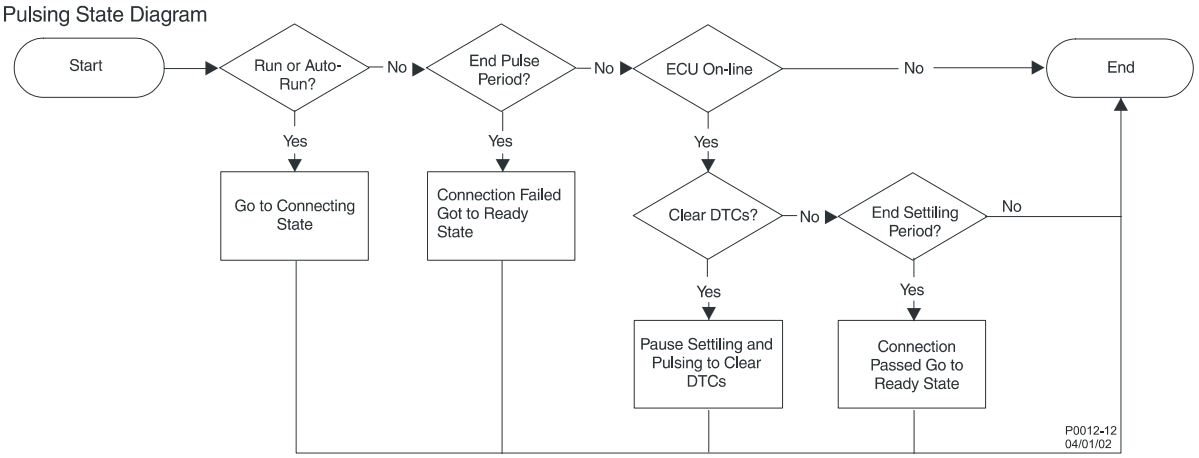

Figure 3-19. Pulsing State Diagram

Connecting State

The Connecting State follows the sequence of events shown in Figure 3-20, Connecting State Diagram. If ECU Communications are not established by the time the Response Timeout expires, then the ECU Communications Failure Flag is set to trigger the Alarm state. The Connecting state will power up the ECU. And once it reads in the engine speed, it checks if it is above Crank-Disconnect. If it is, then it will go to the Running state. Otherwise, it will go to the Pre-Start state.

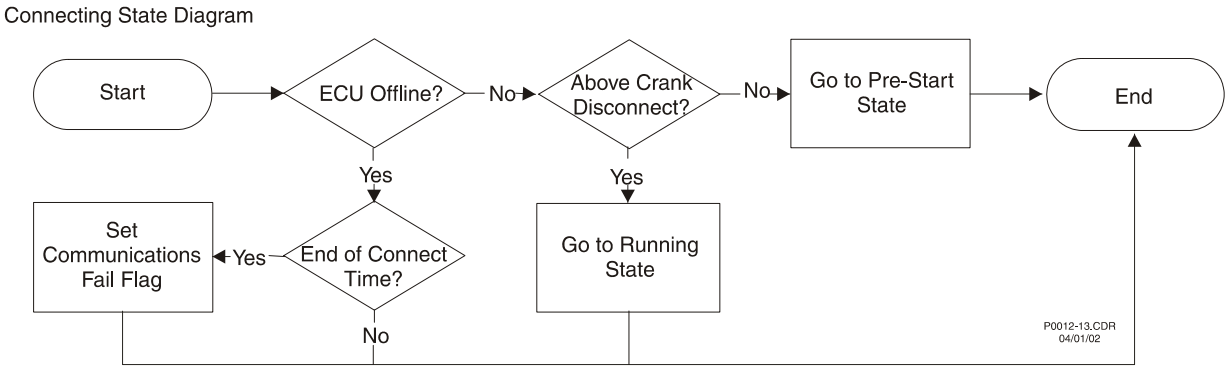

Figure 3-20. Connecting State Diagram

Pre-Start State

This state will transition immediately to the Running state if the engine speed is above Crank-Disconnect. Otherwise it will wait here and close the Pre-heat relay for the pre-start time delay duration. If engine speed is below Safe-To-Restart (the rpm value used in deciding when to engage the starter) and the Pre-start time delay is expired or set to zero, then it will transition to the Cranking state. If engine speed falls in the range between the Crank-Disconnect and Safe-To-Restart, then the state will pause and display Not Safe to Crank along with the rpm value until the engine speed moves out of this range. If it is not safe to crank and there is a pre-start time delay, then the Pre-heat relay will stay closed because it was closed when it was waiting for the pre-start time delay to expire. If Pre-start time delay was set to zero, then the Pre-heat relay was never closed. Therefore, it would remain open while it is not safe to crank. See Figure 3-21 for the pre-start state diagram.

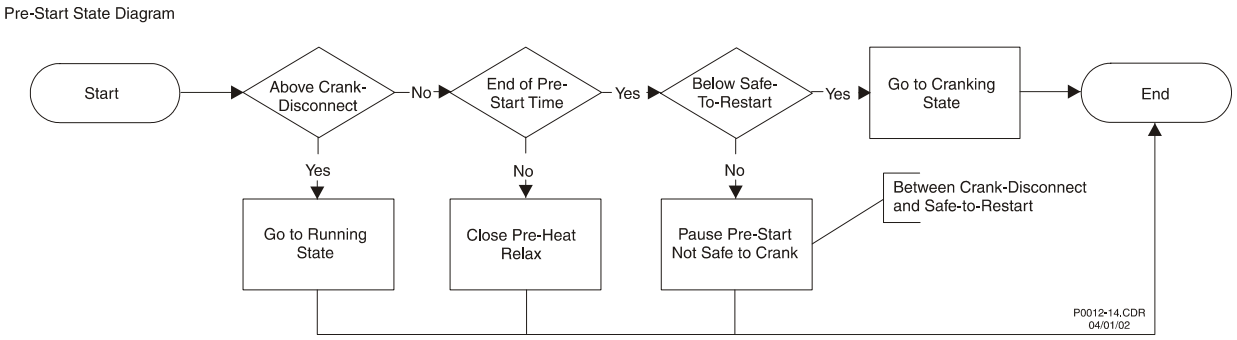

Figure 3-21. Pre-Start State Diagram

Cranking State

This state will engage the starter and transition to the Running state once engine speed is above crank-disconnect. During the Cranking state, the crank-type is checked. If the crank-type is Cycle Crank, then the unit will transition to the Resting state when the crank time expires. If the crank-type is Continuous Crank or is on the last crank cycle when the crank timer expires. then the Over-Crank Flag is set to trigger the Alarm state. If SysConfig goes to Off/Auto-Off, then transition to the Cooling state. In the Cooling state, if ECU Power Support is needed, it will go to the Shutting Down state. See Figure 3-22 for the cranking state diagram.

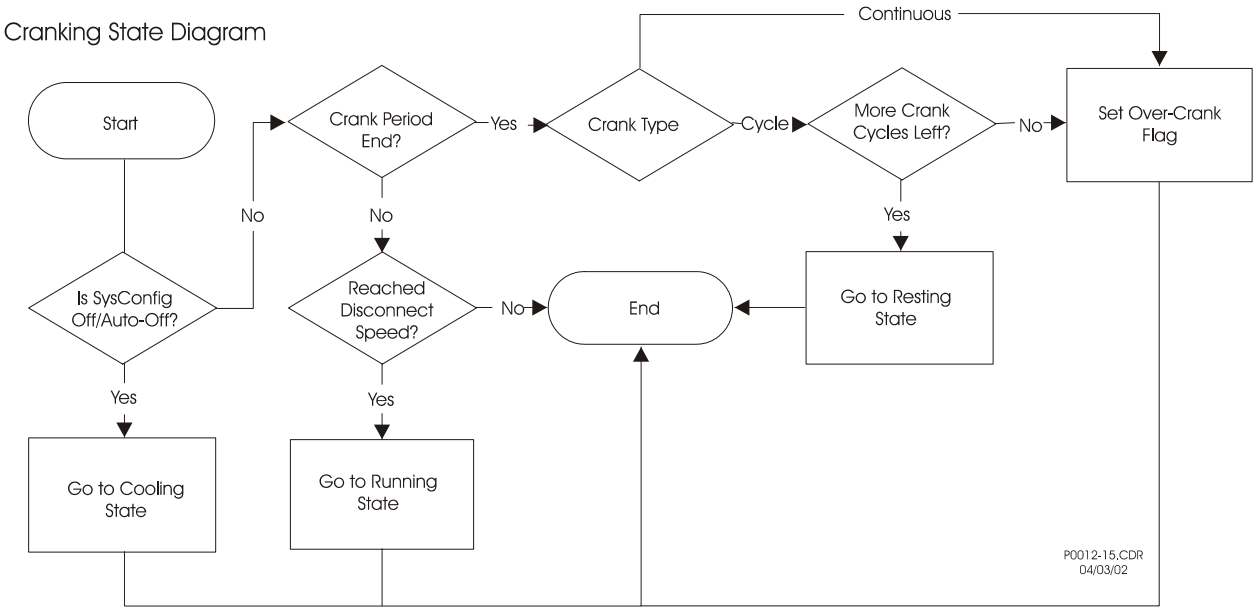

Figure 3-22. Cranking State Diagram

Resting State

If the rest period has ended then the unit will transition back to the Cranking state. If the State Machine is following the ECU Power Support diagram, then the Fuel Solenoid relay will be closed during the Resting state. Thus there is a possibility for the engine to start running during this state. Therefore, when the ECU Power Support diagram is being followed, engine speed is checked to see if it is above crank-disconnect. If it is, then the unit will transition into the Running state. See Figure 3-23 for the resting state diagram.

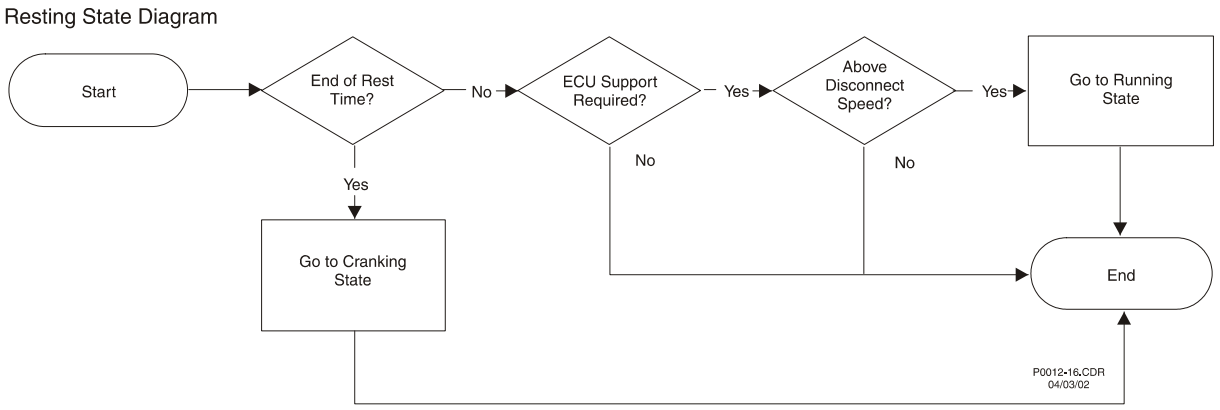

Figure 3-23. Resting State Diagram

Running State

If the SysConfig changes to Off/Auto-Off, then the unit transitions to the Cooling state. If SysConfig is set to Auto-Run, then the Cool-Down Timer is reset or incremented here if a load is applied and removed from the engine. If Pre-Start Contact After Disconnect was enabled in BESTCOMS, then during the course of this state, the Pre-Start relay will remain closed, otherwise it will be opened. See Figure 3-24 for the running state diagram.

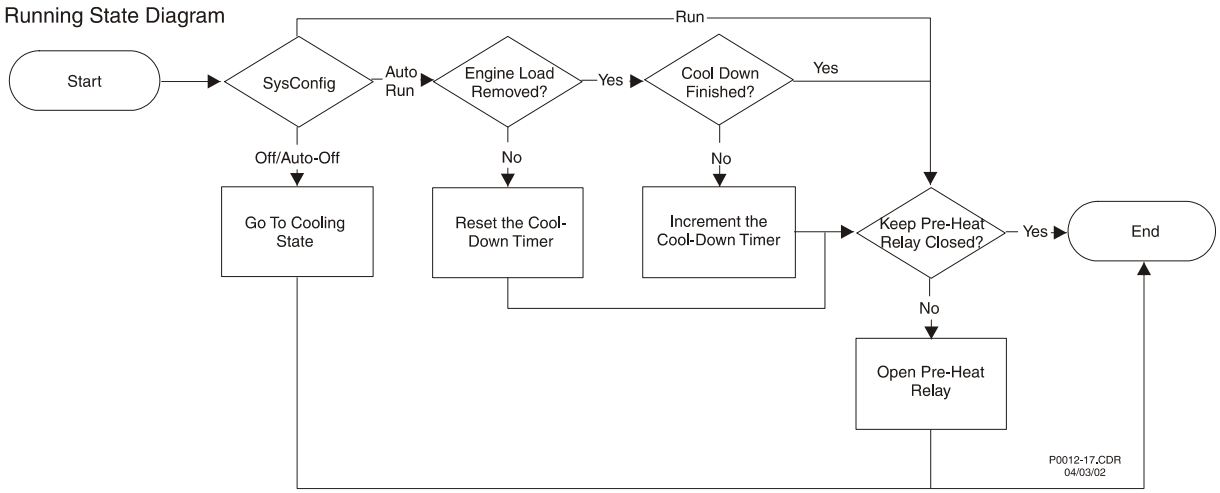

Figure 3-24. Running State Diagram

Cooling State

This state is only available if the unit is in Auto/Off with an unexpired Cool-Down Time or if the unit was in the Cranking state when the unit went to Off. If SysConfig changes back to Auto-Run, then this state will transition straight into the Running state since the engine should already be running while it is in the Cooling state. If SysConfig is Off, then the unit was either in the Cranking or Running state and the unit will check if it should go to the Ready or Shutting Down state. If there is a load applied to the engine or one was applied and then removed but the engine wasn't running long enough after it was removed to expire the Cool-Down Time, then the unit will stay in this state until the Cool-Down Time expires. After the Cool-Down Time expires if the unit is following the ECU Power Support diagram, then the state will transition to the Shutting Down state. Otherwise, it will go to the Ready state. See Figure 3-25 for the cooling state diagram.

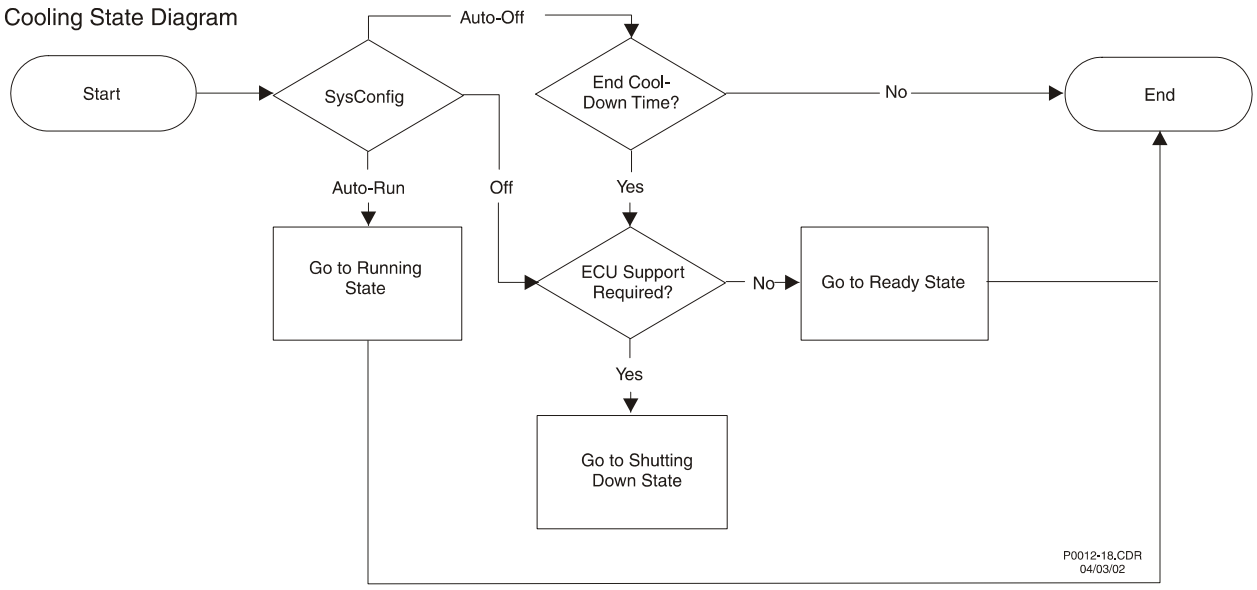

Figure 3-25. Cooling State Diagram

Shutting Down State

The Shutting Down State follows the sequence of events shown in Figure 3-26, Shutting Down State Diagram. If the Engine Shut Down Timer expires, the unit transitions to the Ready state. If SysConfig changes back to Run/Auto-Run, then this state will transition to the Connecting state because if the unit is in a Shutting Down state it will continue to follow the ECU Power Support diagram. See Figure 3-26.

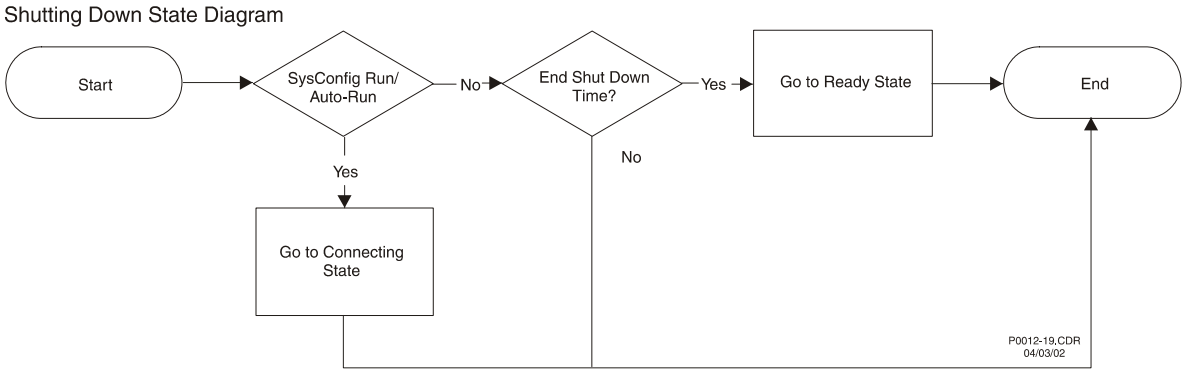

Figure 3-26. Shutting Down State Diagram

Alarm State

All states except Reset can transition to this state. Every 32 ms the State Machine checks for alarms and pre-alarms before running through each state. If an alarm is flagged in the initial alarm check, then the unit goes into an Alarm state and waits there for the alarm to clear. If it is in Run/Auto-Run, then the alarm can only be cleared by going to Off. When the alarm clears, the Alarm state will transition to the Ready state. If ECU Support is enabled, then the unit will go to the Pulsing state immediately after transitioning to the Ready state. If in Off/Auto-Off, then the alarm can only be cleared if the alarm condition ceases or if the user disables the alarm via BESTCOMS. See Figure 3-27 for the alarm state diagram.

NOTE

With ECU Support enabled, if the alarm was tripped by an ECU value, then it will not clear. This is because in the Alarm state, the fuel solenoid is open, thus causing the ECU to not have power to update the internal variables. To clear an alarm in this event, the user must remotely put the unit in Off via BESTCOMS, or go from Auto-Off to Off via the front panel to force a pulse of the ECU.

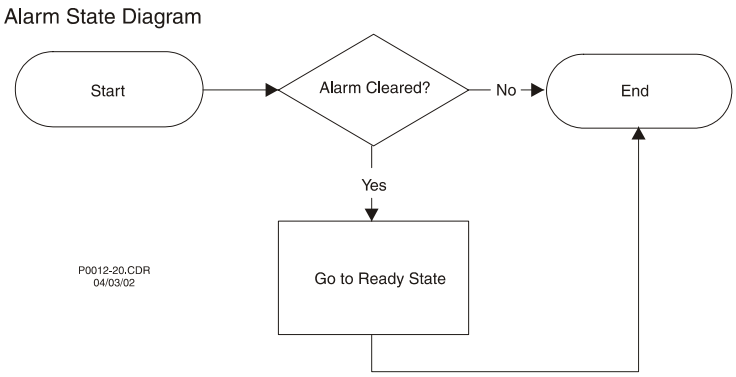

Figure 3-27. Alarm State Diagram

SECTION 4 • INSTALLATION

TABLE OF CONTENTS

SECTION 4 • INSTALLATION 4-1
- INTRODUCTION 4-1
- HARDWARE 4-1
- MOUNTING 4-1
  - DGC Isolator Kit 4-2
- CONNECTIONS 4-3
  - KDGC-2001 Terminations 4-3
  - Communication Port 4-3
  - CAN Connections 4-4
  - KDGC-2001 Connections for Typical Applications 4-4
  - Volvo Penta EDC III Applications 4-9

List of Figures

Figure 4-1. Cutout Dimensions in Inches (Millimeters) 4-1
Figure 4-2. KDGC-2001 Dimensions 4-2
Figure 4-3. KDGC-2001 Communication Port Pin Assignments 4-3
Figure 4-4. Personal Computer to KDGC-2001 Connections 4-4
Figure 4-5. CAN Cable Assembly 4-4
Figure 4-6. KDGC-2001 System Ladder Diagram 4-5
Figure 4-7. Direct-Connected, Single-Phase, Three-Wire Sensing 4-6
Figure 4-8. Direct-Connected, Three-Phase, Line-to-Line Sensing 4-7
Figure 4-9. Direct-Connected, Three-Phase, Line-to-Neutral Sensing 4-8
Figure 4-10. Direct-Connected, Single-Phase, Three-Wire Sensing, Volvo Penta EDC III 4-10
Figure 4-11. Direct-Connected, Three-Phase, Line-to-Line Sensing, Volvo Penta EDC III 4-11
Figure 4-12. Direct-Connected, Three-Phase, Line-to-Neutral Sensing, Volvo Penta EDC III 4-12

List of Tables

Table 4-1. KDGC-2001 Communication Port Pin Assignments 4-3
Table 4-2. CAN Cable Assembly Termination Assignments 4-4

SECTION 4 • INSTALLATION

INTRODUCTION

KDGC-2001 Digital Genset Controllers are delivered in sturdy cartons to prevent shipping damage. Upon receipt of a unit, check the part number against the requisition and packing list for agreement. Inspect for damage, and if there is evidence of such, immediately file a claim with the carrier and notify Katolight.

If the controller will not be installed immediately, store it in the original shipping package in a moisture- and dust-free environment.

HARDWARE

KDGC-2001 controllers are packaged for mounting in any top-mount enclosure. The front panel is resistant to moisture, salt fog, humidity, dust, dirt, and chemical contaminants. It also inhibits insect and rodent entrance.

A KDGC-2001 controller is secured to a panel by the four permanently-attached 10-32 by ⅝ inch (½ inch usable) studs and four nylon lined nuts (supplied). Hardware mounting torque is 30 in-lb (3.4 N•m).

MOUNTING

Case cutout dimensions are shown in Figure 4-1. Overall dimensions are shown in Figures 4-2.

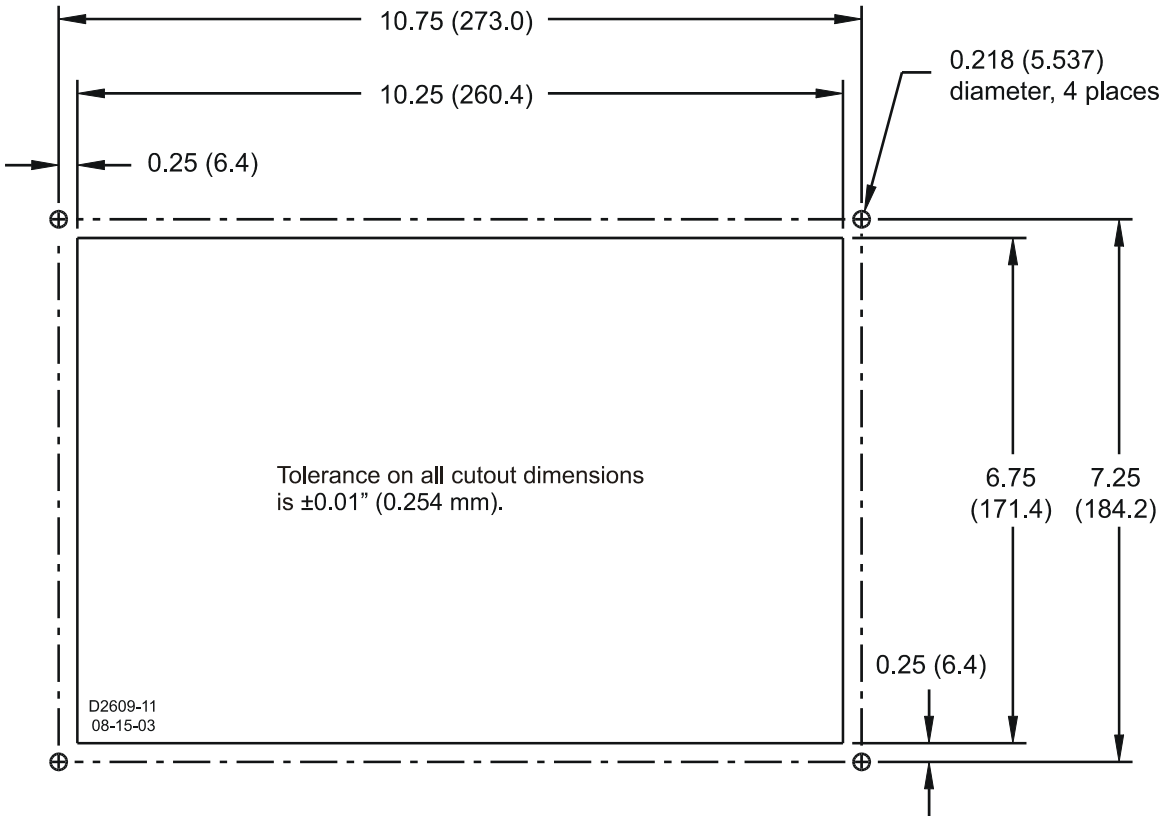

Figure 4-1. Cutout Dimensions in Inches (Millimeters)

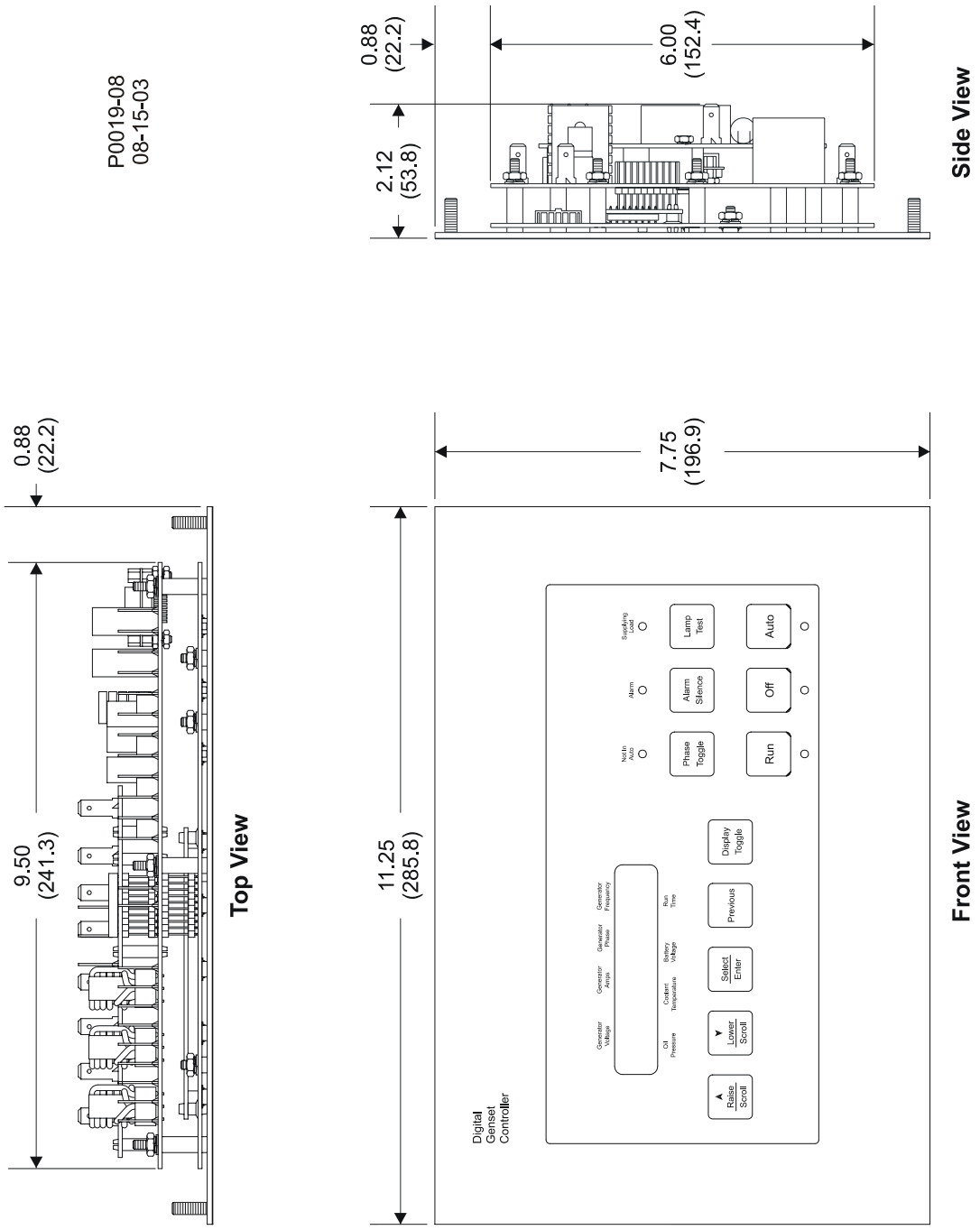

Figure 4-2. KDGC-2001 Dimensions

KDGC Isolator Kit

The optional KDGC Isolator Kit provides an economical way to reduce the level of shock and vibration transmitted from a generator to the KDGC-2001. The KDGC Isolator Kit eliminates the need to mount an isolator box on top of the generator conduit box and simplifies wiring considerations. Isolator kits are available with either black- or gray-colored gaskets. Kit part number 9 3554 06 100 is supplied with a black gasket and kit part number 9 3554 06 101 is supplied with a gray gasket.

The KDGC Isolator Kit provides vibration dampening at frequencies greater than 48 hertz. Above 90 hertz, vibration transmissibility is less than 10 percent of the input magnitude.

CONNECTIONS

NOTE

Ensure that the KDGC-2001 control power wiring is correct. Reverse polarity will not damage the controller, but it will prevent the KDGC-2001 from operating.

Be sure that the KDGC-2001 is hard-wired to earth ground with no smaller than 12 AWG copper wire attached to the ground terminal on the rear panel of the controller.

Except as noted above, connections should be made with wire no smaller than 14 AWG.

Be sure to supply the controller with the correct level of operating power.

KDGC-2001 Terminations

KDGC-2001 terminals, excluding the serial communication port and CAN interface, consist of quarter-inch blade, quick-connect terminals. These terminals accept female, quarter-inch connectors. All KDGC-2001 terminals are located on the rear panel of the controller. The connectors used on the KDGC-2001 make it easy to remove the controller for out-of-circuit testing or maintenance.

KDGC-2001 terminals are illustrated and described in Section 2, *Human-Machine Interface.*

Communication Port

The RS-232 port on the rear panel uses a DB9 female connector. Figure 4-3 illustrates the pin assignments of the communication port and Table 4-1 identifies the RS-232 connector pin functions. A standard communication cable terminated with a DB9 male connector is used for PC interface with the KDGC-2001 as shown in Figure 4-4.

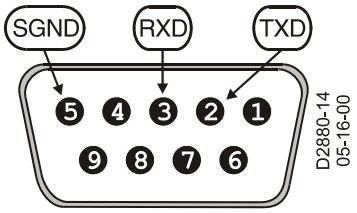

Figure 4-3. DGC-100 Communication Port Pin Assignments

Table 4-1. KDGC-2001 Communication Port Pin Assignments

Pin	Function	Name	Direction
1	N/C	—	N/A
2	Transmit Data	TXD	From KDGC-2001
3	Receive Data	RXD	To KDGC-2001
4	N/C	—	N/A
5	Signal Ground	GND	N/A
6	N/C	—	N/A
7	N/C	—	N/A
8	N/C	—	N/A
9	N/C	—	N/A

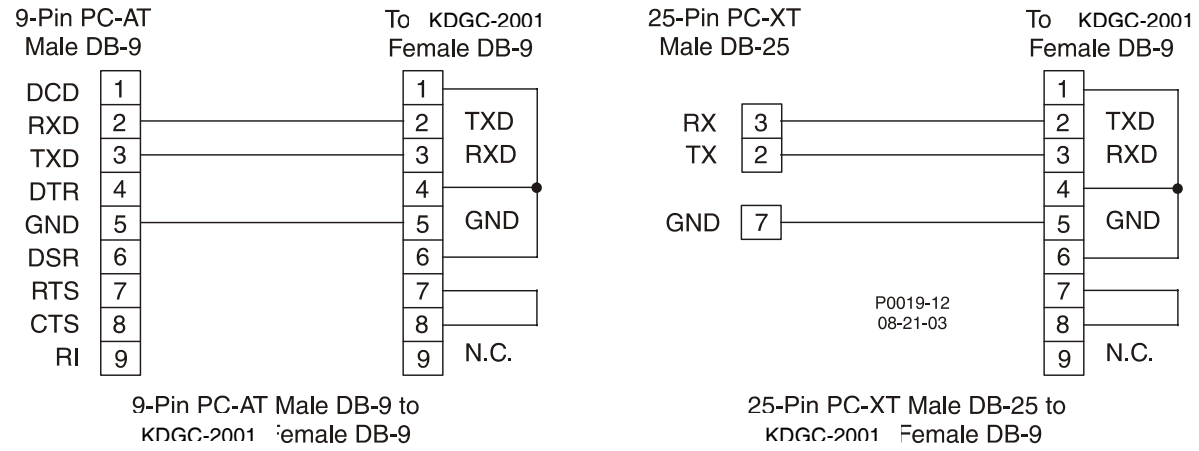

Figure 4-4. Personal Computer to KDGC-2001 Connections

CAN Connections

The CAN connector mates with the cable assembly (Basler P/N 9 3589 00 002) provided with the KDGC-2001. The cable assembly is illustrated in Figure 4-5 and the termination assignments are listed in Table 4-2.

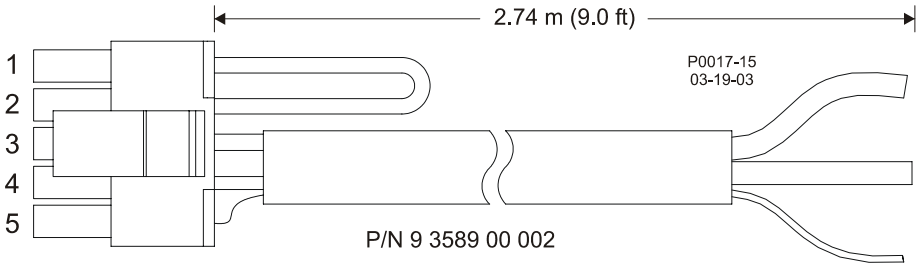

Figure 4-5. CAN Cable Assembly

Table 4-2. CAN Cable Assembly Termination Assignments

Termination	Function	User Termination
Pin 1	Termination Resistor	*
Pin 2		
Pin 3	CAN High	Red Wire
Pin 4	CAN Low	Black Wire
Pin 5	Drain	Uninsulated Wire †

* If the KDGC-2001 is not providing one end of the J1939 backbone, cut the jumper connected across pins 1 and 2 to disconnect the internal terminating resistor.

† The J1939 drain (shield) should be grounded at one point only. If grounded elsewhere, cut the drain connection to the KDGC-2001.

Note: If the KDGC-2001 is not part of the J1939 backbone, the stub connecting the KDGC-2001 to the backbone should not exceed 914 millimeters (3 feet) in length.

KDGC-2001 Connections for Typical Applications

Figures 4-6 through 4-9 illustrate typical applications using the KDGC-2001. A typical KDGC-2001 ladder diagram is shown in Figure 4-6. Figure 4-7 shows typical ac connections for a direct-connected, single-phase, three-wire sensing system. Figure 4-8 shows typical ac connections for a direct-connected, three-phase, line-to-line sensing system. Figure 4-9 shows typical ac connections for a direct-connected, three-phase, line-to-neutral sensing system.

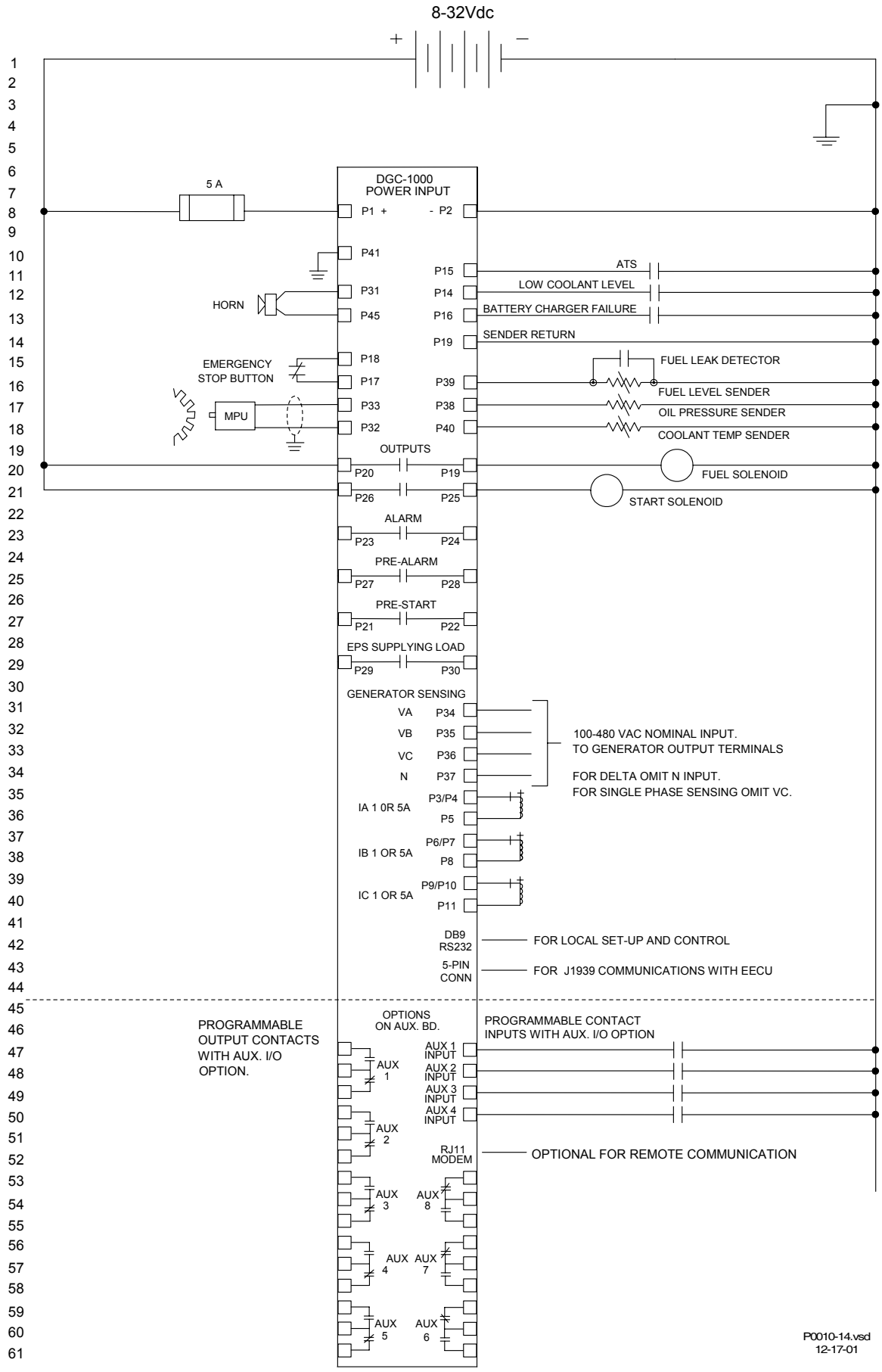

Figure 4-6. KDGC-2001 System Ladder Diagram

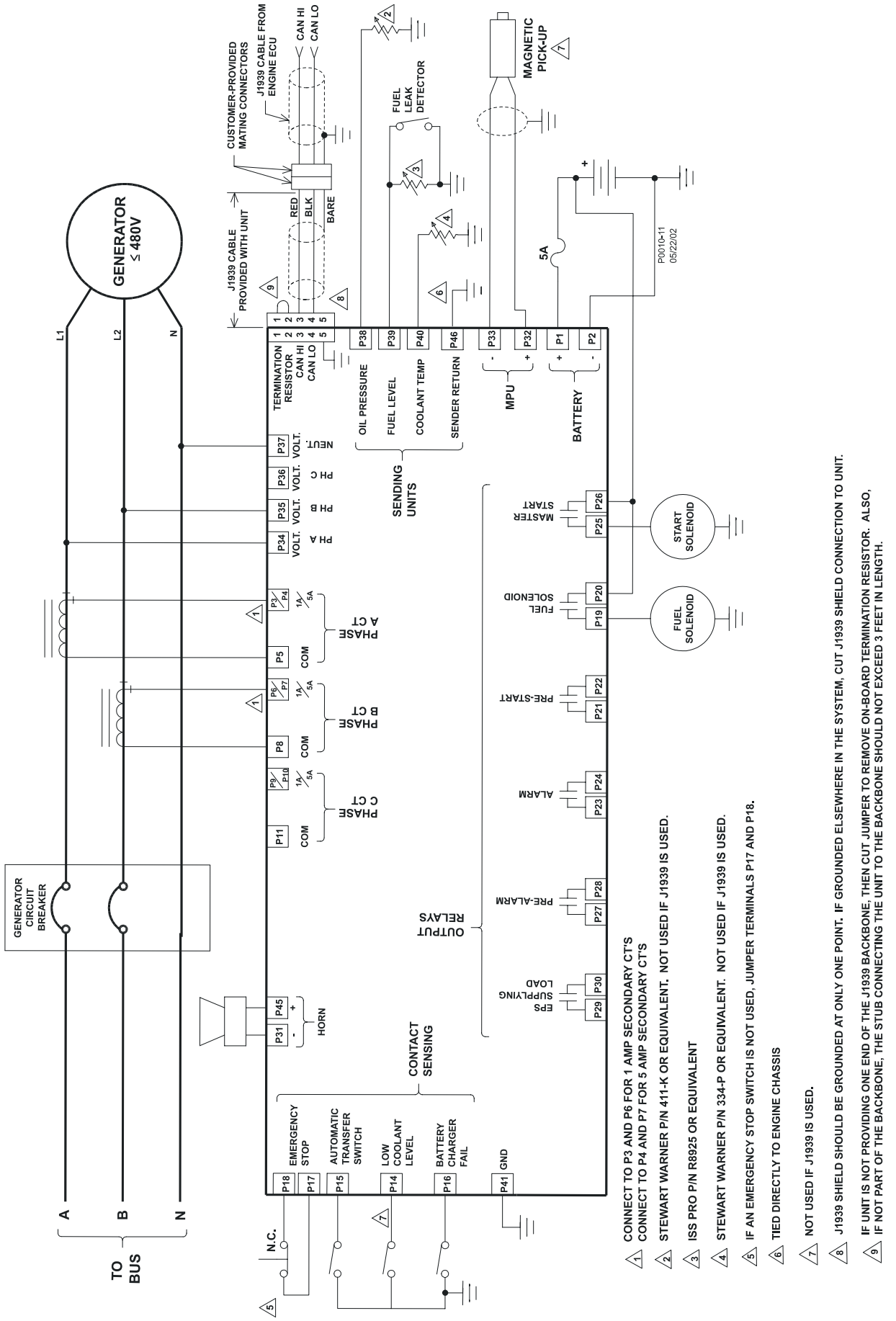

Figure 4-7. Direct-Connected, Single-Phase, Three-Wire Sensing

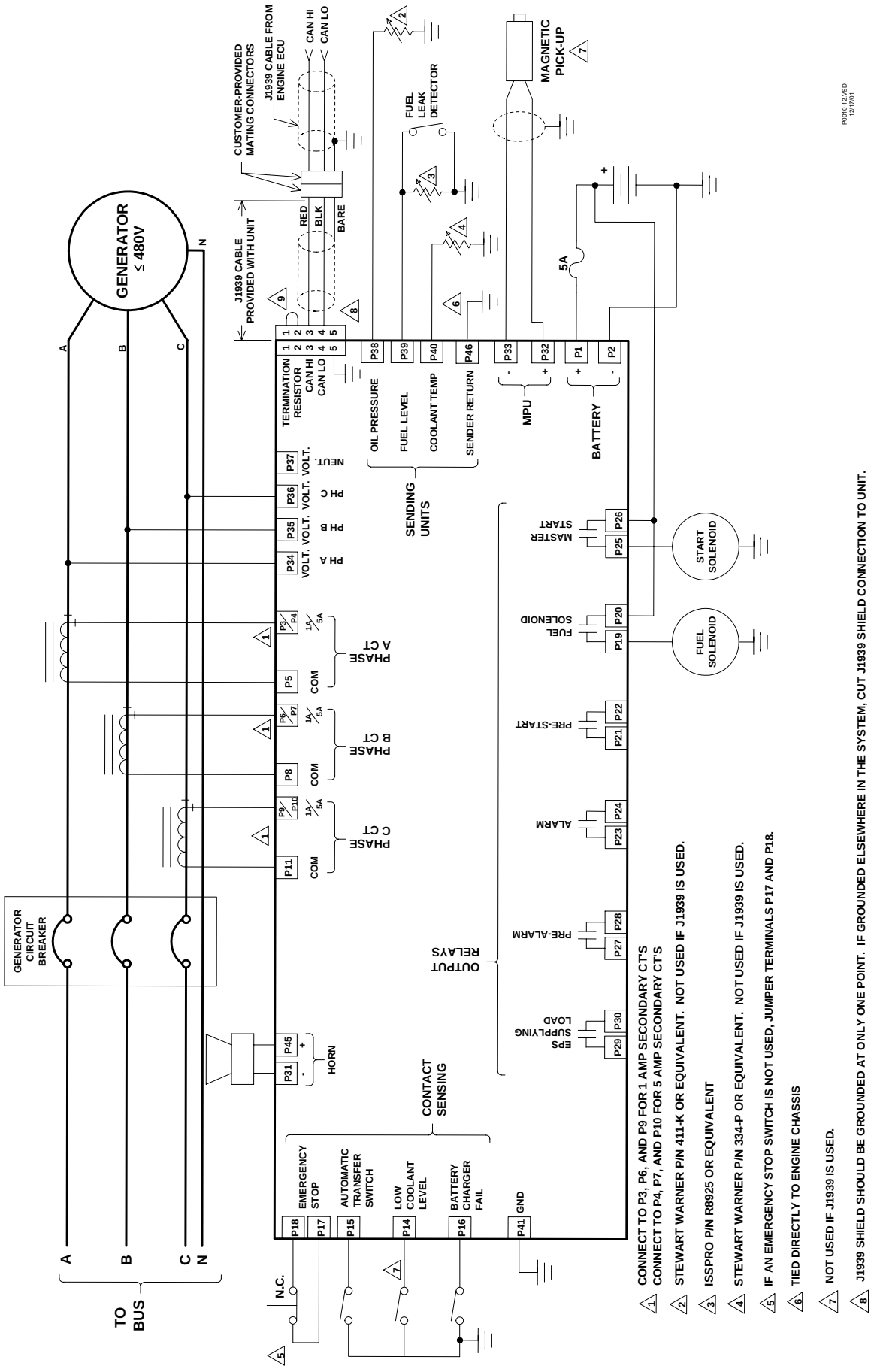

Figure 4-8. Direct-Connected, Three-Phase, Line-to-Line Sensing

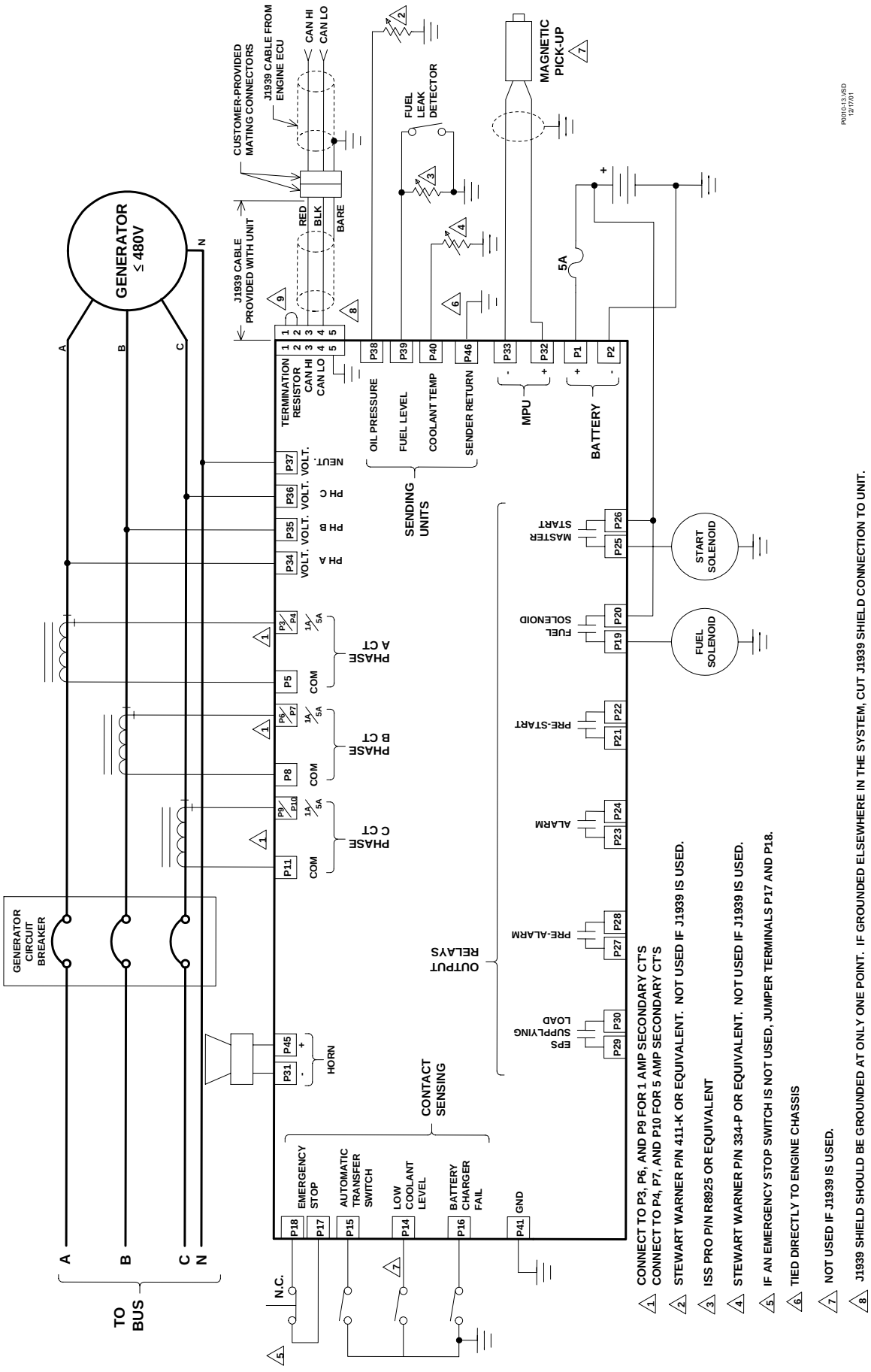

Figure 4-9. Direct-Connected, Three-Phase, Line-to-Neutral Sensing

Volvo Penta EDC III Applications

Volvo engines equipped with Volvo Penta EDC III controllers, like the TAD124xGE series, can receive engine control commands (such as start and stop) from the KDGC-2001 through the SAE J1939 communication interface. To invoke this feature, the EDC must receive a J1939 message containing engine control information within one second of waking (exiting sleep mode). If the EDC III does not receive an engine control message within the prescribed time, it will enter the stand-alone mode and ignore any J1939 control messages. If this occurs, the EDC III must be forced back into sleep mode by pressing the auxiliary stop button on the engine or by momentarily disconnecting EDC power.

The interconnection diagrams of Figures 4-10, 4-11, and 4-12 illustrate the KDGC-2001 and EDC connections that allow the KDGC-2001 to awaken the EDC and start the engine, or simply acquire engine status information. Wakeup of the EDC is initiated by using the KDGC-2001 fuel solenoid output contacts to apply battery power to the EDC. To stop the engine, the KDGC-2001 issues a sleep command through the J1939 interface to the EDC and opens the fuel solenoid output contacts. This causes the EDC to stop the engine and enter the sleep mode.

In order for the KDGC-2001 to communicate with the EDC, two KDGC-2001 settings must be changed from their default values.

- The J1939 address of the KDGC-2001 must be set at 17.
- The engine start/stop configuration setting must be set for “Volvo Penta EDC III”.

In order for the Volvo engine to operate at rated rpm, verify the following KDGC-2001 settings.

- Speed Select setting should be set at “Primary”.
- Accelerator Position setting should be set at 50%.

The above settings are configured on the BESTCOMS System Settings screen. Section 6, *BESTCOMS Software* has information about adjusting KDGC-2001 settings through BESTCOMS.

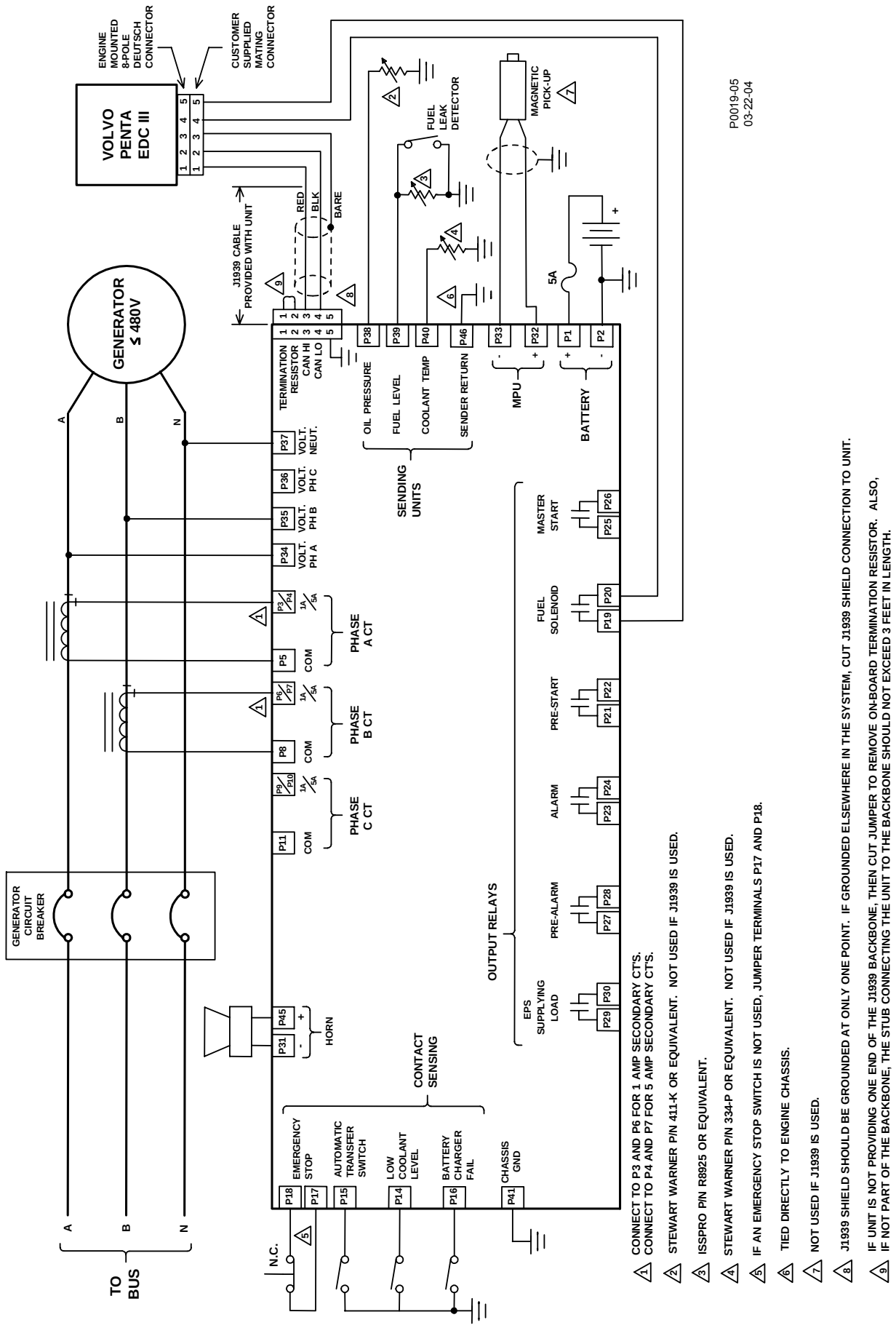

Figure 4-10. Direct-Connected, Single-Phase, Three-Wire Sensing, Volvo Penta EDC III

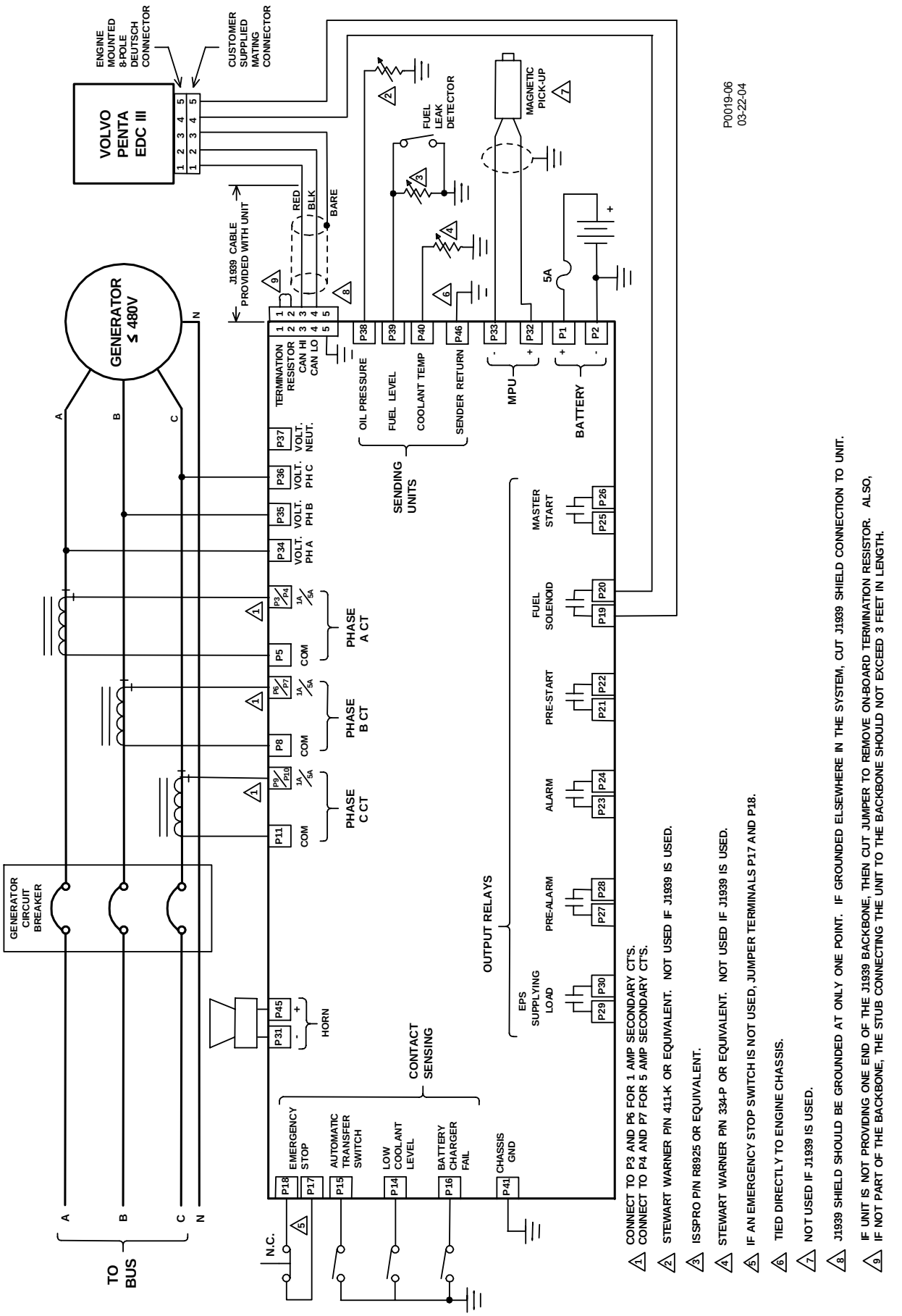

Figure 4-11. Direct-Connected, Three-Phase, Line-to-Line Sensing, Volvo Penta EDC III

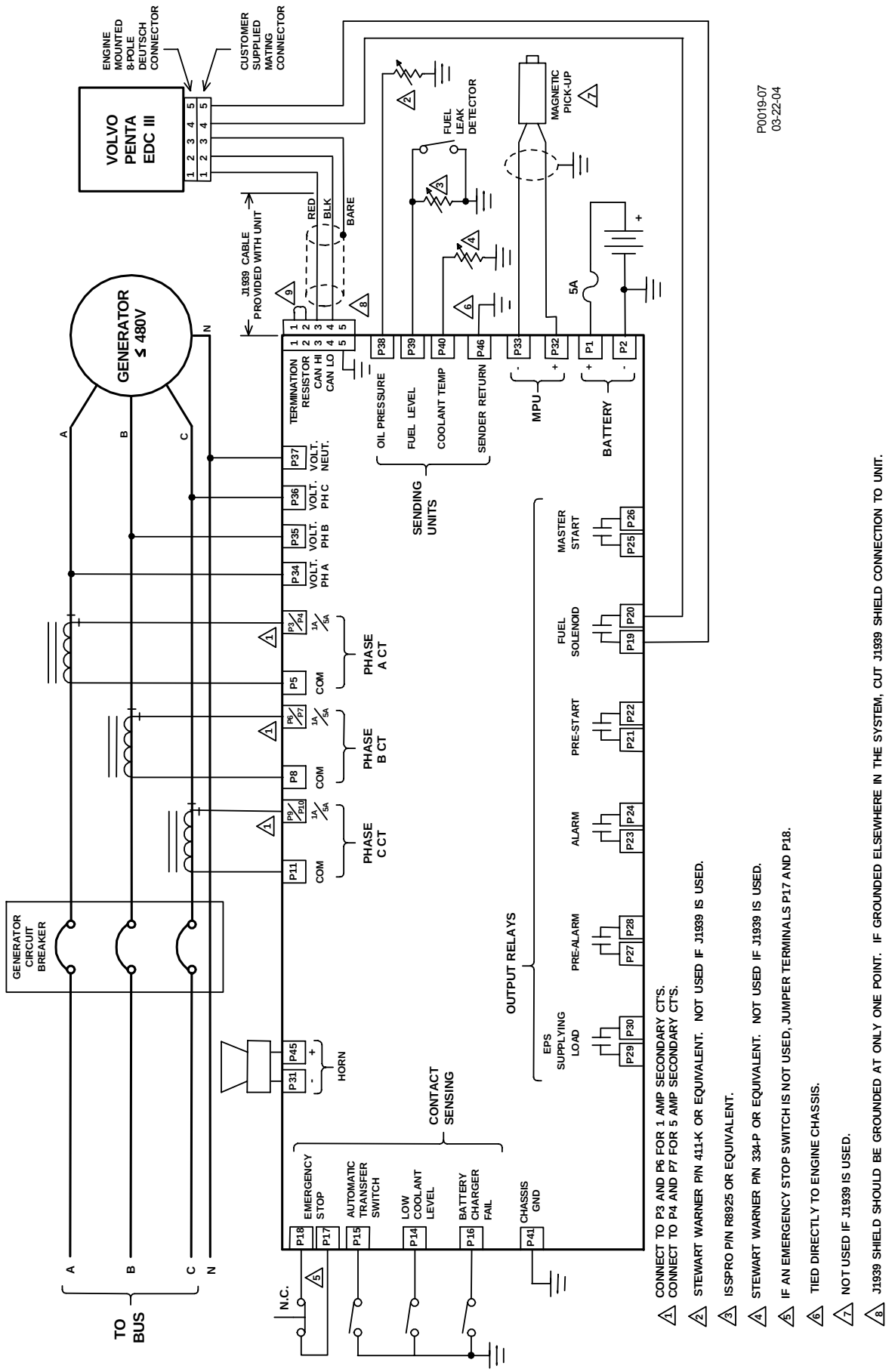

Figure 4-12. Direct-Connected, Three-Phase, Line-to-Neutral Sensing, Volvo Penta EDC III

SECTION 5 • TESTING

TABLE OF CONTENTS

SECTION 5 • TESTING 5-1
- INTRODUCTION 5-1
- EQUIPMENT REQUIRED 5-1
- INITIAL TEST PROCEDURE 5-1
- METERING TEST PROCEDURES 5-3
  - Metering Battery And Generator Voltages 5-3
  - Metering Generator Current 5-5
  - Oil Pressure 5-5
  - Coolant Temperature 5-5
  - Percent Fuel Level 5-5
  - Engine Speed (RPM) 5-5
  - Generator Power Factor 5-6
  - Generator kW And kVA 5-6
- CRANKING TEST PROCEDURES 5-6
  - Crank Cycle 5-6
  - Running 5-7
- PROTECTIVE FUNCTION TEST PROCEDURES 5-7
  - Overcrank 5-7
  - Overspeed 5-7
  - Low Oil Pressure 5-7
  - High Coolant Temperature 5-8
  - Emergency Stop 5-8
  - Low Coolant Level 5-8
  - Low Fuel Level 5-9

List of Figures

Figure 5-1. Test Set Diagram 5-4

List of Tables

Table 5-1. Default Parameter Settings 5-1

SECTION 5 • TESTING

INTRODUCTION

This section provides a procedure for testing the KDGC-2001 using the preset factory default settings.

EQUIPMENT REQUIRED

- DC power supply, 12 or 24 Volts
- 2 amp fuse
- Voltage source, 60 hertz, 0 to 120V
- Current source, 60 hertz, 0 to 5A
- Signal generator, sine-wave, 0 to 5k hertz, 0 to 5V
- Digital voltmeter, 4 1/2 digits (Fluke 8050A or equivalent)
- Continuity tester
- Four single-pole switches
- 2 each, 250 ohm variable resistors
- 1 each 2500 ohm variable resistor

INITIAL TEST PROCEDURE

Unless otherwise specified, the test procedures in this manual use the default parameter settings provided in Table 5-1.

Table 5-1. Default Parameter Settings

PARAMETER	SETTING
Comm Baud Rate	9600 baud
Remote Delay Time	1 millisecond/10
Comm Parity	None
Device Address	125
Settings Source	User
Generator Connection	3-ph L-N
NFPA Level	0
CAN Bus enable	Disabled
DTC Support Enable	Disabled
Unit System	English
Battery Volts	24 volts
Generator Frequency	60 Hz
Rated Engine RPM	1800 rpm
Number Flywheel Teeth	126
Genset kW Rating	300 kilowatt
No Load Cool Down Time	0 minutes
Generator PT Primary Voltage	480 Vac
Generator PT Secondary Voltage	480 Vac
Generator CT Primary Current	500 Aac
Low Fuel Alarm Enable	ON
Low Fuel Alarm Threshold	2% full tank
Low Fuel Pre-alarm Enable	OFF
Low Fuel Pre-alarm Threshold	25% full tank

PARAMETER	SETTING
Low Coolant Temperature Pre-alarm Enable	OFF
Low Coolant Temperature Pre-alarm Threshold	50 degrees F
Battery Overvoltage Pre-alarm Enable	OFF
Battery Overvoltage Pre-alarm Threshold	30.0 Vdc
Maintenance Interval Pre-alarm Enable	OFF
Maintenance Interval Pre-alarm Threshold	500 hours
Engine kW Overload Pre-alarm Enable	OFF
Engine kW Overload Pre-alarm Threshold	105 % of rated
High Coolant Temperature Pre-alarm Enable	ON
High Coolant Temperature Pre-alarm Threshold	250 degrees F
Low Oil Pressure Pre-alarm Enable	ON
Low Oil Pressure Pre-alarm Threshold	25 psi
Low Battery Voltage Pre-alarm Enable	OFF
Low Battery Voltage Pre-alarm Threshold	20.0 Vdc
Low Battery Voltage Pre-alarm Activation Time Delay	10 seconds
Weak Battery Pre-alarm Enable	OFF
Weak Battery Pre-alarm Threshold	15.0 Vdc
Weak Battery Pre-alarm Activation Time Delay	2 seconds
High Coolant Temperature Alarm Enable	ON
High Coolant Temperature Alarm Threshold	275 degrees F
High Coolant Temperature Alarm Arming Delay After Crank Disconnect	60 seconds
Low Oil Pressure Alarm Enable	ON
Low Oil Pressure Alarm Threshold	15 psi
Low Oil Pressure Alarm Arming Delay After Crank Disconnect	10 seconds
Overspeed Alarm Enable	ON
Overspeed Alarm Threshold	110% of rated
Overspeed Alarm Activation Time Delay	50 millisecond
Coolant Temperature Sender Failure Alarm Enable	OFF
Oil Pressure Sender Failure Alarm Enable	OFF
Speed Failure Alarm Enable	OFF
Loss of Generator Voltage Alarm Enable	OFF
Pre-alarm Buzzer Enable	ON
Battery Charger Failure Pre-alarm Enable	OFF
Global Sender Failure Alarm Time Delay	10 seconds
Coolant Temp. Sender Failure Alarm Activation Time Delay	5 minutes
Cranking Style	Cycle
Number of Crank Cycles	2
Cycle Crank Time	5 seconds
Continuous Crank Time	10 seconds
Crank Disconnect Limit	30 % of rated
Pre-Crank Delay	0 seconds
Pre-crank Contact After Crank Disconnect	Open
Generator Speed Mode	MPU/GEN
Generator Rotation	A-B-C

Step 1. Connect the KDGC-2001 test setup as shown in Figure 5-1.

Step 2. Apply operating voltage to battery voltage terminals.

Result: The LCD displays DGC 1000 and the software version for approximately one second before switching to the normal display mode and at the same time, the Alarm sounds. The audible alarm will sound continuously when Not In Auto or in Alarm. The audible alarm may be silenced by pressing the Alarm Silence switch on the front panel.

Step 3 Press the Off switch to place the KDGC-2001 in the OFF position.

Step 4. Verify that LEDs Not In Auto and Off are ON, the Alarm LED is flashing, and the LCD backlight is ON with system parameters displayed.

Step 5. Press the Lamp Test switch and verify that all six LEDs are ON (Not In Auto, Alarm, and Off are red; Supplying Load, Run, and Auto are green). All LCD pixels should be visible.

Step 6. Verify Run, Off, and Auto switches, along with their respective LEDs, toggle as each switch is operated. Not In Auto LED should be OFF when Auto is selected.

Step 7. Verify that switches Raise/Scroll, Lower/Scroll, Select/Enter, Previous, and Display/Toggle are functional by scrolling through the unit menus.

METERING TEST PROCEDURES

Metering Battery And Generator Voltages

NOTE

Displayed voltage is equal to the generator potential transformer primary voltage setting times the applied voltage divided by the generator potential transformer secondary voltage setting.

Step 1. Verify that the battery input (terminals P1 and P2) voltage is 24.0 Vdc.

Step 2. Verify that the KDGC-2001 displayed value is 24.0 ±0.5 Vdc.

Step 3. Apply 120.0 Vac, 60.0 hertz to phase A (line-to-neutral) generator voltage input (terminals P34 and P37).

Step 4. Verify that the KDGC-2001 generator frequency displayed value is 60.0 ±0.2 hertz.

Step 5. Verify that the KDGC-2001 phase A to neutral voltage displayed value is 120.0 ±2.0 Vac.

Step 6. Remove the voltage.

Step 7. Apply 120.0 Vac, 60.0 hertz to phases A and B generator voltage input (terminals P34 and P35).

Step 8. Verify that the KDGC-2001 generator A to B voltage displayed value is 120.0 ±2.0 Vac.

Step 9. Remove the voltage.

Step 10. Apply 120.0 Vac, 60.0 hertz (line-to-neutral) to phase B generator voltage input (terminals P35 and P37).

Step 11. Verify that the KDGC-2001 line-to-neutral voltage displayed value is 120.0 ±2.0 Vac.

Step 12. Remove the voltage.

Step 13. Apply 120.0 Vac, 60.0 hertz to phases B and C generator voltage input (terminals P35 and P36).

Step 14. Verify that the KDGC-2001 generator B to C voltage displayed value is 120.0 ±2.0 Vac.

Step 15. Remove the voltage.

Step 16. Apply 120.0 Vac, 60.0 hertz (line-to-neutral) to phase C generator voltage input (terminals P36 and P37).

Step 17. Verify that the KDGC-2001 line-to-neutral voltage displayed value is 120.0 ±2.0 Vac.

Step 18. Remove the voltage.

Step 19. Apply 120.0 Vac, 60.0 hertz to phases C and A generator voltage input (terminals P36 and P34).

Step 20. Verify that the KDGC-2001 generator C to A voltage displayed value is 120.0 ±2.0 Vac.

Step 21. Remove the voltage.

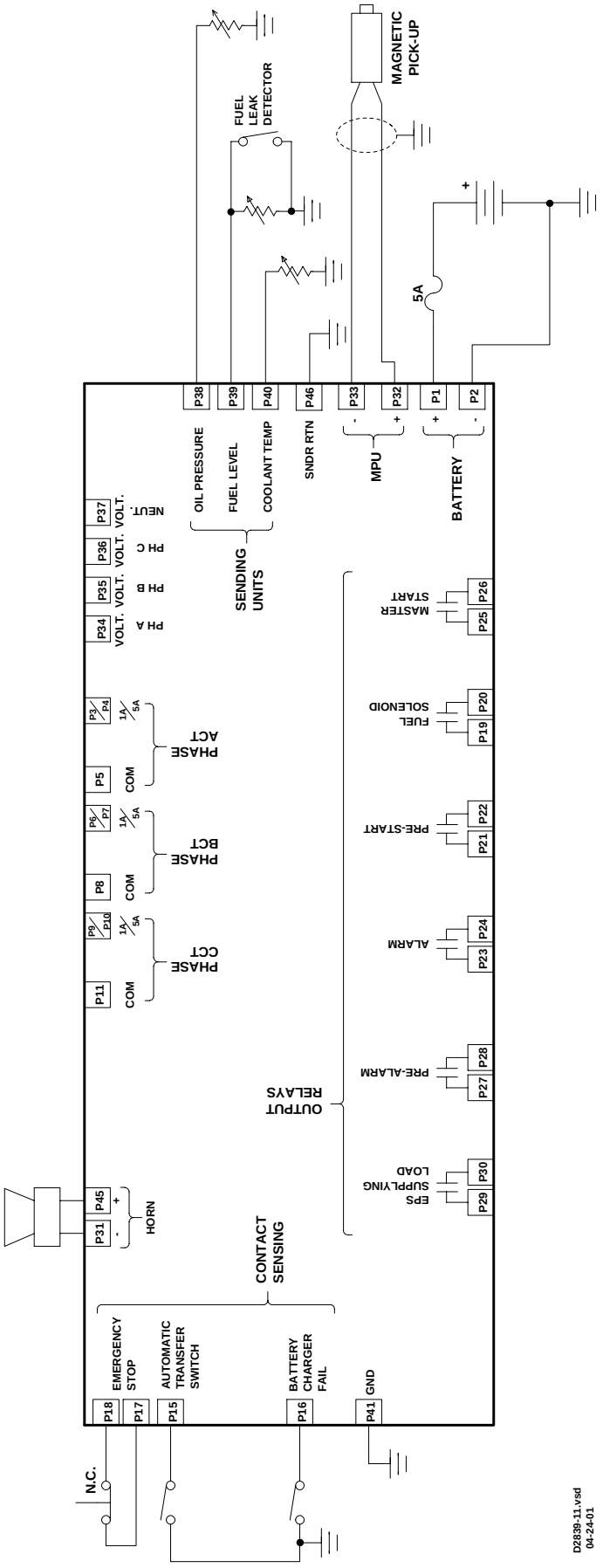

Figure 5-1. Test Set Diagram

Metering Generator Current

NOTE
Displayed current is equal to the generator current transformer primary current setting times the applied current divided by one or five (the nominal current value).

Step 1. Apply 1.000 Aac to the KDGC-2001 generator five ampere phase A CT input (terminals P4 and P5).

Step 2. Verify that the KDGC-2001 phase A current displayed value is 100.0 ±2.0 amperes.

Step 3. Remove the current.

Step 4. Apply 1.000 Aac to the KDGC-2001 generator five ampere phase B CT input (terminals P7 and P8).

Step 5. Verify that the KDGC-2001 phase B current displayed value is 100.0 ±2.0 amperes.

Step 6. Remove the current.

Step 7. Apply 1.000 Aac to the KDGC-2001 generator five ampere phase C CT input (terminals P10 and P11).

Step 8. Verify that the KDGC-2001 phase C current displayed value is 100.0 ±2.0 amperes.

Step 9. Remove the current.

Oil Pressure

Step 1. Apply 60 ohms across the Oil Pressure transducer input (terminals P38 and P2).

Step 2. Verify that the KDGC-2001 displayed value is 80 ±2.0 PSI.

Coolant Temperature

Step 1. Apply 100 ohms across the Coolant Temperature transducer input (terminals P40 and P2).

Step 2. Verify that the KDGC-2001 displayed value is 205 ±4.0° F.

Percent Fuel Level

Step 1. Apply 137 ohms across the Fuel Level transducer input (terminals P39 and P2).

Step 2. Verify that the KDGC-2001 displayed value is 50 ±2.0%.

Engine Speed (RPM)

NOTE
RPM as derived from the MPU is equal to [MPU output frequency (hertz) times 60] divided by the number of flywheel teeth. RPM as derived from the generator is equal to [generator output voltage frequency] divided by the rated generator frequency (hertz) times the rated rpm.

Step 1. Apply a 5 Vac, 3,780 hertz sine wave to the KDGC-2001 magnetic pickup unit inputs (terminals P32 and P33).

Step 2. Verify that the KDGC-2001 displayed value is 1,800 ±36 rpm.

Step 3. Remove the voltage.

Generator Power Factor

NOTE

The KDGC-2001 uses phase A voltage and phase B current for Power Factor calculations. Therefore, if this test is performed with the current lagging the voltage by 120 degrees, the displayed Power Factor will be approximately 1.00.

Step 1. Apply 120 Vac to phase A to neutral generator voltage inputs (terminals P34 and P37).

Step 2. Apply 1.0 Aac to phase B current transformer inputs (terminals P7 and P8) in phase with the phase A to neutral voltage.

Step 3. Verify that the KDGC-2001 displayed value is -0.50 ±0.02.

Step 4. Remove voltage and current.

Generator kW And kVA

NOTE

The displayed kW is equal to the kVA times the power factor.

Step 1. Apply in parallel 120 Vac to phase A to neutral (terminals P34 and P37), phase B to neutral (terminals P35 and P37), and phase C to neutral (terminals P36 and P37).

Step 2. Apply in series and in phase with the voltage 1 Aac to Phase A current transformer input (terminals P3 and P5), Phase B current transformer input (terminals P6 and P8), and Phase C current transformer input (terminals P9 and P11).

Step 3. Verify that the KDGC-2001 displayed value for individual phase kW is -30 ±2 kW.

Step 4. Verify that the KDGC-2001 displayed value for total kW is -90 ±2 kW.

Step 5. Verify that the KDGC-2001 displayed value for individual phase kVA is 60 ±2 kVA.

Step 6. Verify that the KDGC-2001 displayed value for total kVA is within 180 ±5 kVA.

Step 7. Remove voltage and current.

CRANKING TEST PROCEDURES

Crank Cycle

NOTE

The DGC will go into cvercrank if the Off switch is not pressed before two crank cycles expire. Pressing Off will reset this condition if it occurs.

Step 1. Verify that all output contacts are open.

Step 2. Press the Run switch on the front panel.

Step 3. Verify that the KDGC-2001 displays CRANKING STATUS.

Step 4. Verify that only the Master Start, Auxiliary Start, Fuel Solenoid and Pre-Start output contacts are closed during CRANKING CYCLE.

Step 5. Verify that only the Pre-Start contact remains closed during RESTING.

Step 6. Press the Off switch on the front panel.

Step 7. Press the Auto switch on the front panel.

Step 8. Apply a contact closure across the Automatic Transfer Switch input (terminals P15 and P2).

Step 9. Verify that the KDGC-2001 displays CRANKING STATUS.

Step 10. Verify that only the Master Start, Auxiliary Start, Fuel Solenoid and Pre-Start output contacts are closed during CRANKING CYCLE.

Step 11. Verify that only the Pre-Start contact remains closed during RESTING.

Step 12. Press the Off switch on the front panel.

Step 13. Open the contact across the Automatic Transfer Switch inputs.

Running

Step 1. Press the Run switch on the front panel.

Step 2. Within 5 seconds of beginning cranking, apply in parallel 120 Vac to phase A to neutral (terminals P34 and P37), phase B to neutral (terminals P35 and P37) and phase C to neutral (terminals P36 and P37).

Step 3. Verify that only the fuel solenoid output contact is closed.

Step 4. Verify that the KDGC-2001 normal mode display now meters the active generator values listed on the front panel instead of displaying READY.

Step 5. Press the Off switch on the front panel.

Step 6. Remove the voltage.

Step 7. Press the Auto switch on the front panel.

Step 8. Apply a contact closure across the Automatic Transfer Switch input (terminals P15 and P2).

Step 9. Within 5 seconds of beginning cranking, apply in parallel 120 Vac to phase A to neutral (terminals P34 and P37), phase B to neutral (terminals P35 and P37), and phase C to neutral (terminals P36 and P37).

Step 10. Verify that only the Fuel Solenoid output contact is closed.

Step 11. Verify that the KDGC-2001 normal mode display now meters the active generator values listed on the front panel instead of displaying READY.

Step 12. Press the Off switch on the front panel.

Step 13. Remove the voltage.

Step 14. Open the contact across the Automatic Transfer Switch inputs.

PROTECTIVE FUNCTION TEST PROCEDURES

Overcrank

Step 1. Press the Run switch on the front panel.

Step 2. Verify that after two crank cycles the KDGC-2001 display indicates GEN OVER-CRANK ALARM and that only the Alarm output contacts are closed.

Step 3. Press the Off switch on the front panel and verify that the KDGC-2001 resets to the Ready mode and that all output contacts open.

Overspeed

Step 1. Apply in parallel 120 Vac to phase A to neutral (terminals P34 and P37), phase B to neutral (terminals P35 and P37), and phase C to neutral (terminals P36 and P37).

Step 2. Apply a 5 Vac, 4,000 hertz sine wave to the KDGC-2001 MPU inputs (terminals P32 and P33).

Step 3. Press the Run switch on the front panel.

Step 4. Slowly increase the frequency to the KDGC-2001 MPU input until an overspeed shutdown occurs.

Step 5. Verify shutdown occurs within 4,158 ±83 hertz (1,980 ±38 RPM).

Step 6. Verify that the KDGC-2001 display indicates GEN OVERSPEED ALARM and that only the Alarm output contacts are closed.

Step 7. Remove the voltages.

Step 8. Press the Off switch on the front panel and verify that the KDGC-2001 resets to the Ready mode and that all output contacts open.

Low Oil Pressure

Step 1. Apply in parallel 120 Vac to phase A to neutral (terminals P34 and P37), phase B to neutral (terminals P35 and P37), and phase C to neutral (terminals P36 and P37).

Step 2. Press the Run switch on the front panel.

Step 3. Wait ten seconds after crank disconnect. Increase the resistance across the Oil Pressure sender input (terminals P38 and P2) until a Pre-alarm occurs.

Step 4. Verify that the KDGC-2001 display value is 25 ±2 PSI when Pre-alarm occurs.

Step 5. Verify that the KDGC-2001 displays an alternately flashing dark field in the oil pressure location and that the Pre-alarm output contact has closed.

Step 6. While monitoring displayed oil pressure, further increase the resistance across the Oil Pressure sender input until a low oil pressure shutdown occurs.

NOTE
Oil Pressure displayed value is 0 below 15 psi.

Step 7. Verify that the KDGC-2001 displayed value is within 0 to 17 psi when shutdown occurs.

Step 8. Verify that the KDGC-2001 display indicates LOW OIL PRESSURE ALARM and that only the Alarm output contacts are closed.

Step 9. Remove the voltage and return the resistance to 60 ohms.

Step 10. Press the Off switch on the front panel and verify that the KDGC-2001 resets to the Ready mode and that all output contacts open.

High Coolant Temperature

Step 1. Apply in parallel 120 Vac to phase A to neutral (terminals P34 and P37), phase B to neutral (terminals P35 and P37), and phase C to neutral (terminals P36 and P37).

Step 2. Press the Run switch on the front panel.

Step 3. Wait 60 seconds after crank disconnect. Decrease the resistance across the Coolant Temperature sender input (terminals P40 and P2) until a Pre-alarm occurs.

Step 4. Verify that the KDGC-2001 display value is 250 ±5 degrees when Pre-alarm occurs.

Step 5. Verify that the KDGC-2001 displays an alternately flashing dark field in the coolant temperature location and that the Pre-alarm output contact has closed.

Step 6. While monitoring displayed coolant temperature, further decrease the resistance across the Coolant Temperature sender input until an over temperature shutdown occurs.

Step 7. Verify that the KDGC-2001 displayed value is 275 ±6 degrees when shutdown occurs.

Step 8. Verify that the KDGC-2001 indicates OVER TEMP ALARM and that only the Alarm and Pre-alarm output contacts are closed.

Step 9. Remove the voltage and return the resistance to 100 ohms.

Step 10. Press the Off switch on the front panel and verify that the KDGC-2001 resets to the Ready mode and that all output contacts open.

Emergency Stop

Step 1. Apply in parallel 120 Vac to phase A to neutral (terminals P34 and P37), phase B to neutral (terminals P35 and P37), and phase C to neutral (terminals P36 and P37).

Step 2. Press the Run switch on the front panel.

Step 3. Open the contact across the Emergency Stop inputs (terminals P17 and P18).

Step 4. Verify that the KDGC-2001 indicates EMERGENCY SHUTDOWN SWITCH PRESSED and that all output contacts are open.

Step 5. Reapply the contact closure across the Emergency Stop inputs.

Step 6. Press the Off switch on the front panel and verify that the KDGC-2001 resets to the Ready mode and that all output contacts open.

Step 7. Remove the voltage.

Low Coolant Level

Step 1. Apply in parallel 120 Vac to phase A to neutral (terminals P34 and P37), phase B to neutral (terminals P35 and P37), and phase C to neutral (terminals P36 and P37).

Step 2. Press the Run switch on the front panel.

Step 3. Close the Low Coolant Level contact.

Step 4. Verify that the KDGC-2001 indicates LOW COOLANT LEVEL and that the Alarm contact is closed.

Step 5. Open the Low Coolant Level contact.

Step 6. Press the Off switch on the front panel and verify that the KDGC-2001 resets to the Ready mode and that all output contacts open.

Step 7. Remove the voltage.

Low Fuel Level

Step 1. Apply 30 ohms across the Fuel Level transducer input (terminals P39 and P2).

Step 2. Press the Display/toggle pushbutton to enter the alternate display mode and press the Raise/Scroll pushbutton to access the Fuel Level quantity screen.

Verify that the KDGC-2001 displayed value is 100%.

Step 3. Increase the resistance until the LOW FUEL alarm occurs.

Verify that only the alarm contact closes.

Step 4. Slowly decrease the resistance until the KDGC-2001 resets to the Ready mode.

Verify that all output contacts are open and the resistance is 236 ±5 ohms.

This completes the Test Procedures.

SECTION 6 • BESTCOMS SOFTWARE

TABLE OF CONTENTS

SECTION 6 • BESTCOMS SOFTWARE 6-1
- INTRODUCTION 6-1
- INSTALLATION 6-1
  - Installing BESTCOMS-KDGC-2001 6-1
  - Connecting the KDGC-2001 and PC 6-1
- STARTING BESTCOMS 6-1
- ESTABLISHING COMMUNICATION 6-1
  - Initiating RS-232 Communication 6-2
  - Initiating Modem Communication 6-3
  - Unit ID 6-3
- CHANGING SETTINGS 6-4
- SENDING AND RECEIVING SETTINGS 6-4
  - Sending Settings 6-4
  - Receiving Settings 6-4
- SETTING DEFINITIONS 6-4
  - Sensing Transformers 6-4
  - Pre-Alarms 6-4
  - Alarms 6-8
  - Engine Cranking 6-11
  - System 6-12
  - Input/Output Settings 6-13
  - Modem Settings 6-15
  - Metering 6-17
- REAL-TIME CLOCK 6-24
- PROGRAMMABLE SENDERS 6-25
- RUN TIME AND KW HOURS 6-26
- ENGINE CONTROL UNIT (ECU) TIMERS 6-26
- EVENT LOG 6-27
- CHANGING THE COMMUNICATION PARAMETERS 6-28
- PASSWORD PROTECTION 6-28
  - Changing Passwords 6-28
  - Third Party Access Level 6-29
- SETTINGS FILES 6-29
  - Printing Settings Files 6-29
  - New Settings File 6-29
  - Saving Settings Files 6-29
  - Opening Settings Files 6-29
- TERMINATING COMMUNICATION 6-29
- EMBEDDED FIRMWARE 6-29
  - Updating Firmware 6-30

Figures

Figure 6-1. BESTCOMS Title and Version 6-1
Figure 6-2. Sensing Transformers Screen 6-1
Figure 6-3. RS-232 Comm Port Screen 6-2
Figure 6-4. Password Screen 6-2
Figure 6-5. RS-232 Phone Book (Phone Book 2) 6-2
Figure 6-6. Modem Comm Port Screen 6-3
Figure 6-7. Modem Phone Book 6-3
Figure 6-8. Sensing Transformers Screen 6-5
Figure 6-9. Pre-Alarms Screen, Low Fuel-Low Cool-Batt. OverVolt. Tab 6-5
Figure 6-10. Pre-Alarms Screen, Maint. Interv.-Eng. kW Overload-Hi Cool Tab 6-6
Figure 6-11. Pre-Alarms Screen, Low Oil-Low Batt Volt-Weak Batt Volt Tab 6-7
Figure 6-12. Pre-Alarms Screen, Audible-Battery Charger-Fuel Level Sender Tab 6-8

Figure 6-13. Pre-Alarms Screen, CAN Bus-Diagnostic Trouble Codes Tab 6-9
Figure 6-14. Alarms Screen, Hi Cool-Low Fuel-Low Oil Tab 6-9
Figure 6-15. Alarms Screen, Overspeed-Sender Fail Tab 6-10
Figure 6-16. Engine Cranking Screen 6-11
Figure 6-17. System Settings Screen 6-12
Figure 6-18. Input/Output Settings Screen, Programmable Input Contact Setup Tab 6-14
Figure 6-19. Input/Output Settings Screen, Aux Output Setup Tab 6-15
Figure 6-20. Modem Settings Screen, Modem Setup Tab 6-16
Figure 6-21. Modem Settings Screen, Modem Dialout Conditions Tab 6-17
Figure 6-22. Metering Screen, System Tab 6-18
Figure 6-23. Metering Screen, Voltage Tab 6-19
Figure 6-24. Metering Screen, Current Tab 6-19
Figure 6-25. Metering Screen, Power Tab 6-20
Figure 6-26. Metering Screen, General Tab 6-21
Figure 6-27. Metering Screen, Summary Tab 6-21
Figure 6-28. Metering Screen, Alarms Tab 6-22
Figure 6-29. Metering Screen, ECU Data Tab 6-22
Figure 6-30. Engine Configuration Screen 6-23
Figure 6-31. Metering Screen, ECU DTC Info Tab 6-23
Figure 6-32. Set Real Time Clock Screen 6-24
Figure 6-33. Programmable Senders Screen, Coolant Temperature Tab 6-25
Figure 6-34. Run Time and KW Hours Dialog Box 6-26
Figure 6-35. ECU Timers Dialog Box 6-26
Figure 6-36. Event Log Screen 6-27
Figure 6-37. Communications Configure 6-28
Figure 6-38. Change Password Dialog Box 6-28
Figure 6-39. Embedded Firmware Upgrade Screen 6-30

Katolight Service - Master Repair Manual - Page 2137

SECTION 6 • BESTCOMS SOFTWARE

INTRODUCTION

BESTCOMS-DGC-100 software provides a user-friendly communication link between the KDGC-2001 and the user. All KDGC-2001 settings can be changed through BESTCOMS and all KDGC-2001 settings can be saved in a computer file for use later to configure other controllers with the same settings.

INSTALLATION

BESTCOMS-KDGC-2001 software operates with IBM-compatible personal computers (PCs) using Microsoft® Windows® 95, 98, Me, 2000, XP, and NT®. The minimum recommended operating requirements are listed below.

- IBM-compatible PC, 486DX2 or faster and a minimum of 4 MB of RAM
- CD-ROM drive
- An available serial port

Installing BESTCOMS-KDGC-2001

1. Insert the BESTCOMS CD-ROM into the PC CD-ROM drive.
2. When the KDGC-2001 Setup and Documentation CD menu appears, click the Install button for the BESTCOMS application. The setup utility automatically installs BESTCOMS-KDGC-2001 on your PC.

Connecting the KDGC-2001 and PC

Connect a communication cable between the rear RS-232 connector of the KDGC-2001 and the appropriate communication port of the PC. Refer to Figure 2-2 for the location of the KDGC-2001 RS-232 connector and Figure 4-4 for the required connections between the KDGC-2001 and a PC.

STARTING BESTCOMS

BESTCOMS is started by clicking the Windows® Start button, pointing to Programs, the Katolight folder, and then clicking the BESTCOMS-KDGC-2001 icon. At startup, a screen with the program title and version number (Figure 6-1) is displayed briefly. After this dialog is displayed, the Sensing Transformers screen (Figure 6-2) is displayed.



Figure 6-1. BESTCOMS Title and Version

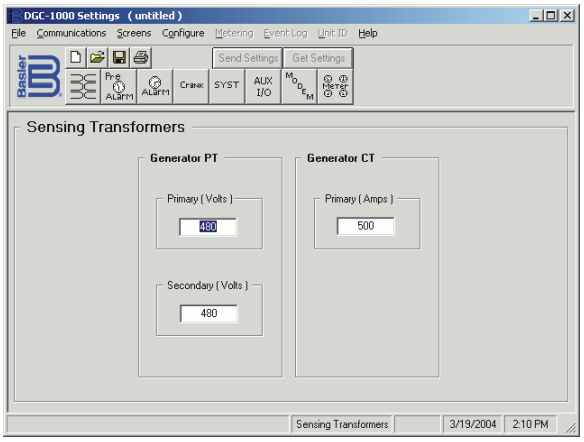

Figure 6-2. Sensing Transformers Screen

ESTABLISHING COMMUNICATION

Communication between BESTCOMS and the KDGC-2001 must be established before reading or changing settings. BESTCOMS screen settings are updated only after communication is opened or the communication settings have been changed.

KDGC-2001 communication with BESTCOMS can be established through the RS-232 serial interface or optional modem.

Initiating RS-232 Communication

Open the KDGC-2001 RS-232 port by clicking **Communications** on the menu bar, clicking **Open**, and then **RS232 Connection**. When RS232 Connection is selected, the Comm Port screen of Figure 6-3 appears. Select the appropriate communication port for you PC and click the **Initialize** button. (Information about altering the baud rate, parity setting, and unit identification is provided in *Changing the Communication Parameters*. Information about using the RS-232 phone book (Phone Book 2) is provided in *RS-232 Phone Book*.) When the Password screen of Figure 6-4 appears, enter the appropriate password and click **OK**. The KDGC-2001 is delivered with the following default passwords.

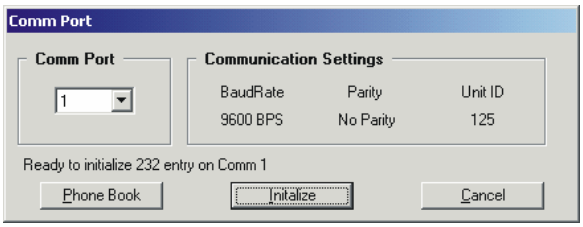

Figure 6-3. RS-232 Comm Port Screen



Figure 6-4. Password Screen

DGC. This limited access password allows all KDGC-2001 settings to be read, but prevents any settings changes.

DGC1000. This full access password allows all KDGC-2001 settings to be read and changed.

OEMLVL. This special access password allows all KDGC-2001 settings to be read and changed. It also allows the KDGC-2001 embedded firmware to be upgraded.

Passwords are case sensitive; all default passwords use upper-case letters. More information about passwords is provided in the *Password Protection* sub-section.

The unit ID number displayed in the Password screen indicates the identification number of the KDGC-2001. Information about changing the unit ID for polled communication is provided in Changing the Communication Parameters.

When the appropriate password is entered in the Password screen and OK is clicked, communication with the KDGC-2001 is established.

RS-232 Phone Book

The RS-232 phone book (Phone Book 2, Figure 6-5) is accessed by clicking the **Phone Book** button on the RS-232 Comm Port screen (accessed by clicking **Communications** on the menu bar, then **Open**, RS232 Connection). This screen allows phone book entries to be selected, added, edited, and deleted.

Selecting an Entry. A phone book entry is selected from the list of entries in the Name window of the phone book screen. When an entry in the list is highlighted, the entry's communication port number is indicated in the Comm Port field. Clicking **OK** selects the entry and returns to the Comm Port screen. The communication port number will be displayed in the Comm Port field of the Comm Port screen.

Adding an Entry. A phone book entry is added to the list of entries in the Name window of the phone book screen by clicking **Add Entry**. When the Add Entry button is clicked, an Add New Entry screen appears. This screen has a field for assigning a descriptive name to the entry and a Comm Port field for assigning a communication port number to the entry. Clicking the **OK** button saves the entry and returns to the Phone Book 2 screen.

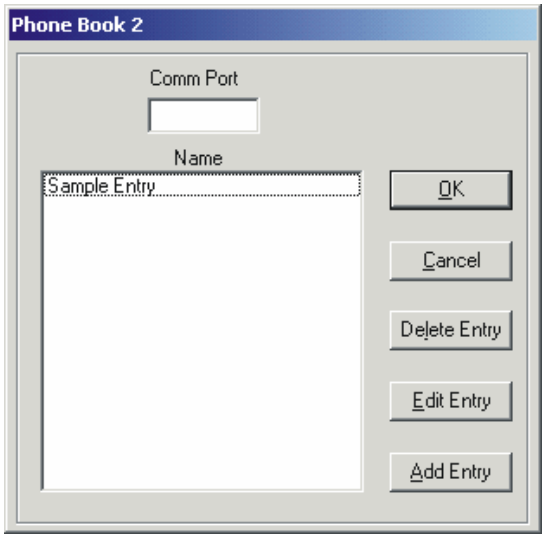

Figure 6-5. RS-232 Phone Book (Phone Book 2)

Katolight Service - Master Repair Manual - Page 2139

Editing an Entry. A phone book entry is edited by selecting the desired entry in the Name window and clicking the **Edit Entry** button. When the Edit Entry button is clicked, an Edit Entry screen appears and allows the entry name and port number to be changed as desired. Clicking the **OK** button saves the entry and returns to the Phone Book 2 screen.

Deleting an Entry. A phone book entry is deleted by selecting the desired entry in the Name window and clicking the **Delete Entry** button.

Initiating Modem Communication

Establish a modem connection by clicking **Communications** on the menu bar, clicking **Open**, and then **Modem Connection**. When Modem Connection is selected, the Comm Port screen of Figure 6-6 appears. Select the appropriate communication port and click the **Initialize** button. (Information about altering the baud rate, parity setting, and unit identification is provided in *Changing the Communication Parameters*.) If the selected communication port is available, the Phone Book screen of Figure 6-7 will appear when the **Initialize** button is clicked. Select the desired entry from the list in the Name window and click the **Dial Number** button to connect with the phone book entry. Creating, editing, and accessing phone book entries is discussed in the following paragraphs.

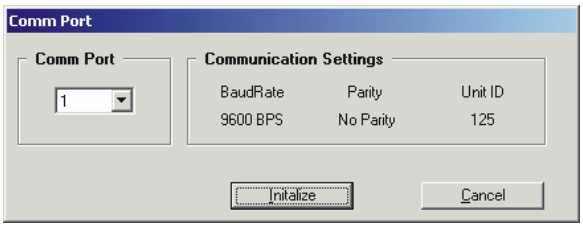

Figure 6-6. Modem Comm Port Screen

Modem Phone Book

The modem phone book (Figure 6-7) is accessed by clicking the **Initialize** button of the Comm Port screen after selecting a modem connection (see previous paragraph). This screen allows phone book entries to be selected, added, edited, and deleted much like the RS-232 phone book. Modem phone book features that differ from the RS-232 phone book are described in the following paragraphs.

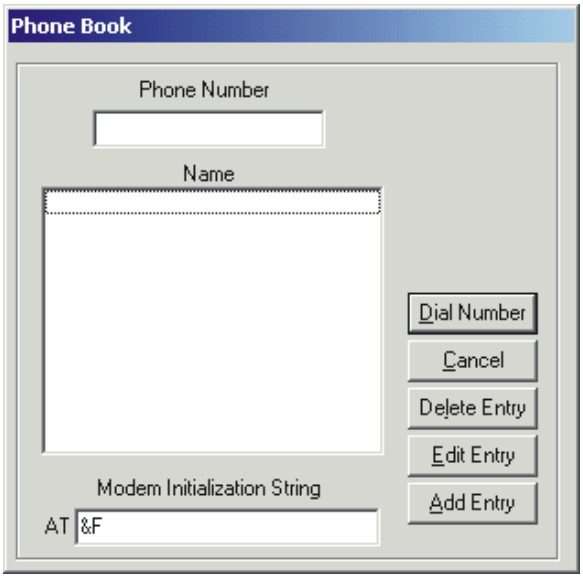

Figure 6-7. Modem Phone Book

Phone Number Field. The phone number field is displayed on the Add New Entry screen, Edit Entry screen, and Phone Book screen. This field displays the telephone number associated with the selected phone book entry and is used by the modem when dialing out.

Modem Initialization String. This field is displayed on the Add New Entry screen, Edit Entry screen, and Phone Book screen. The default string, AT&F, resets the modem to its default, factory profile. Consult your modem documentation for the appropriate AT command.

Dial Number Button. Clicking this button initiates communication by causing the modem to dial the selected phone book entry.

Unit ID

Clicking **Unit ID** on the menu bar and then clicking **Select Another Unit ID** displays the Select Another Unit dialog box. The ID number of another KDGC-2001 on the same network can be entered in the Unit ID field. Clicking the **Save** button causes BESTCOMS to disconnect from the current KDGC-2001 and log onto the KDGC-2001 identified by the number in the Unit ID field. Because this feature allows selection of a new unit ID without breaking communication, it is useful for applications where a modem is used to remotely connect to a network of units.

CHANGING SETTINGS

KDGC-2001 settings are arranged into seven groups.

- Sensing Transformers
- Pre-Alarms
- Alarms
- Crank
- System
- Auxiliary I/O
- Modem

Each setting group has a corresponding button (shown in Figure 6-8) that can be selected to access that group of settings. The seven setting groups can also be accessed by clicking **Screens** on the menu bar and then selecting the desired setting group from the list. Once a setting group is accessed, the individual settings of the group can be viewed and changed.

A setting is changed by clicking within the setting field and typing the new setting. If the new setting is outside the prescribed setting range, a dialog box showing the acceptable range appears when another setting field is accessed or when attempting to send the new setting to the KDGC-2001. The following paragraphs describe how settings are sent to the KDGC-2001.

SENDING AND RECEIVING SETTINGS

When communication is enabled, KDGC-2001 settings can be sent and received through BESTCOMS.

Sending Settings

Setting changes are sent to the KDGC-2001 by clicking the **Send Settings** button. This causes all BESTCOMS settings to become the KDGC-2001 settings. Settings can also be sent to the KDGC-2001 by clicking **Communications** on the menu bar and clicking **Send to DGC**.

Receiving Settings

KDGC-2001 settings are retrieved by clicking the **Get Settings** button. This causes the current settings of the KDGC-2001 to be loaded into BESTCOMS. Settings can also be received from the KDGC-2001 by clicking **Communications** on the menu bar and clicking **Get from DGC**. Settings are also automatically retrieved when logging onto the KDGC-2001.

SETTING DEFINITIONS

Each of the seven setting groups has a corresponding BESTCOMS screen. The settings of each screen are categorized by one or more tabs. In the following paragraphs, settings are arranged and defined according to the organization of the BESTCOMS screens and tabs.

Sensing Transformers

The button displaying a transformer icon is clicked to access the Sensing Transformers screen. The Sensing Transformers screen can also be accessed by clicking **Screens** on the menu bar and clicking **Sensing Transformers**. Sensing Transformer settings are shown in Figure 6-8 and described in the following paragraphs.

Generator PT – Primary (Volts). This setting selects the rating of the primary side of the transformer used to sense generator voltage. The primary voltage setting is adjustable from 1 to 15,000 Vac.

Generator PT – Secondary (Volts). This setting selects the rating of the secondary side of the transformer used to sense generator voltage. The secondary voltage setting is adjustable from 1 to 480 Vac.

Generator CT – Primary (Amps). This setting selects the rating of the primary side of the transformer used to sense generator current. The primary current setting is adjustable from 1 to 5,000 Aac.

Pre-Alarms

Click the **Pre Alarm** button to access the Pre-Alarm Settings screen or click **Screens** on the menu bar and click **Pre-Alarm Settings**. The Pre-Alarms screen consists of five tabs.

- Low Fuel-Low Cool-Batt. OverVolt.
- Maint. Interv.-Eng. kW Overload-Hi Cool
- Low Oil-Low Batt. Volt-Weak Batt Volt
- Audible – Battery Charger – Fuel Level Sender
- CAN Bus – Diagnostic Trouble Codes.

Katolight Service - Master Repair Manual - Page 2141

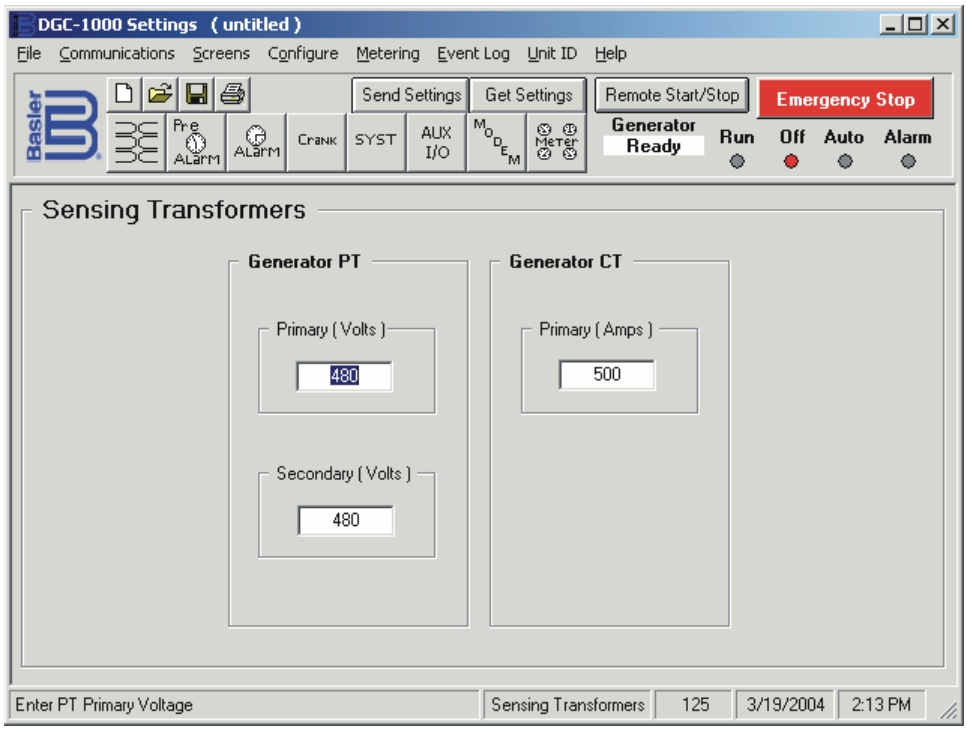

Figure 6-8. Sensing Transformers Screen

Low Fuel-Low Cool-Batt. OverVolt Tab

The Low Fuel-Low Cool-Batt. OverVolt tab settings are shown in Figure 6-9 and described in the following paragraphs.

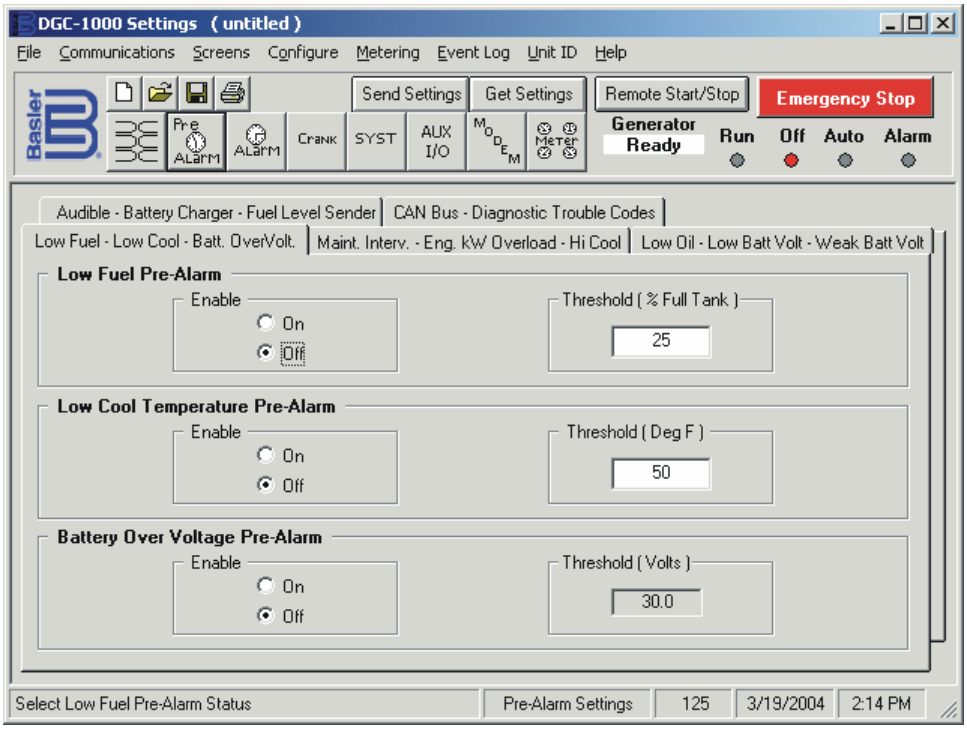

Figure 6-9. Pre-Alarms Screen, Low Fuel-Low Cool-Batt. OverVolt. Tab

Low Fuel Pre-Alarm – Enable. This setting enables and disables annunciation of a low fuel pre-alarm.

Low Fuel Pre-Alarm – Threshold (% Full Tank). This setting selects the fuel level that will trigger a low fuel pre-alarm. A threshold setting of 10 to 100 percent may be entered.

Low Cool Temperature Pre-Alarm – Enable. This setting enables and disables annunciation of a low coolant temperature pre-alarm.

Low Cool Temperature Pre-Alarm – Threshold (Deg). This setting selects the coolant temperature that will trigger a low coolant temperature pre-alarm. A threshold setting of 50 to 100 degrees Fahrenheit or 10 to 38 degrees Celsius may be entered. The unit of measure (Fahrenheit or Celsius) is determined by the Unit System setting of the System screen.

Battery Over Voltage Pre-Alarm – Enable. This setting enables and disables annunciation of a battery overvoltage pre-alarm.

Battery Over Voltage Pre-Alarm – Threshold (Volts). This read-only setting displays the voltage level that will trigger a battery overvoltage pre-alarm. The threshold is fixed at 15 Vdc for systems operating at 12 Vdc and 30 Vdc for systems operating at 24 Vdc.

Maint. Interv. – Eng. kW Overload – Hi Cool Tab

The Maint. Interv. – Eng. kW Overload – Hi Cool Tab settings are shown in Figure 6-10 and described in the following paragraphs.

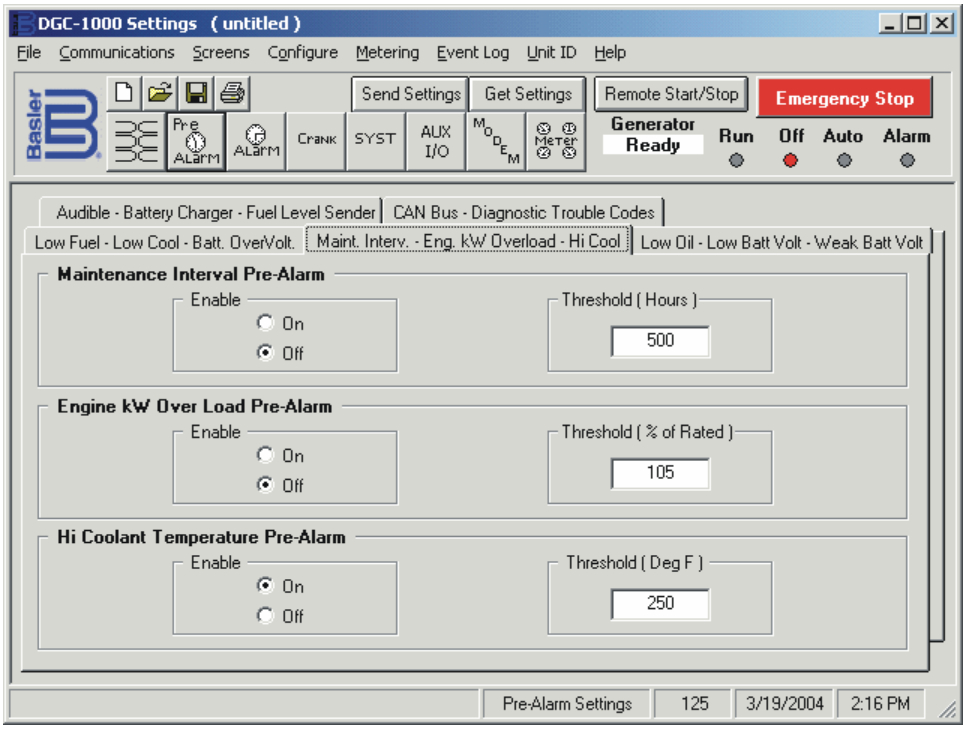

Figure 6-10. Pre-Alarms Screen, Maint. Interv.-Eng. kW Overload-Hi Cool Tab

Maintenance Interval Pre-Alarm – Enable. This setting enables and disables annunciation of a maintenance interval pre-alarm.

Maintenance Interval Pre-Alarm – Threshold (Hours). This setting selects the length of the maintenance interval. An interval of 0 to 5,000 hours may be selected. When a new threshold setting is entered, the Maintenance Interval Timer Reset checkbox of the System Settings screen is selected to apply the new value.

Engine kW Over Load Pre-Alarm – Enable. This setting enables and disables annunciation of an engine kW overload pre-alarm.

Engine kW Over Load Pre-Alarm – Threshold (% of Rated). This setting, expressed as a percentage of the engine rating, selects the generator power level that will trigger an engine kW overload pre-alarm. A threshold setting of 95 to 140 percent may be entered.

Hi Coolant Temperature Pre-Alarm – Enable. This setting enables and disables annunciation of a high coolant temperature pre-alarm. A 60 second activation delay prevents a high coolant temperature pre-alarm from occurring at engine startup.

Hi Coolant Temperature Pre-Alarm – Threshold (Deg). This setting selects the coolant temperature that will trigger a high coolant temperature pre-alarm. A threshold setting of 100 to 280 degrees Fahrenheit or

38 to 138 degrees Celsius may be entered. The unit of measure (Fahrenheit or Celsius) is determined by the Unit System setting of the System screen.

Low Oil-Low Batt Volt-Weak Batt Volt Tab

The Low Oil-Low Batt Volt-Weak Batt Volt Tab settings are shown in Figure 6-11 and described in the following paragraphs.

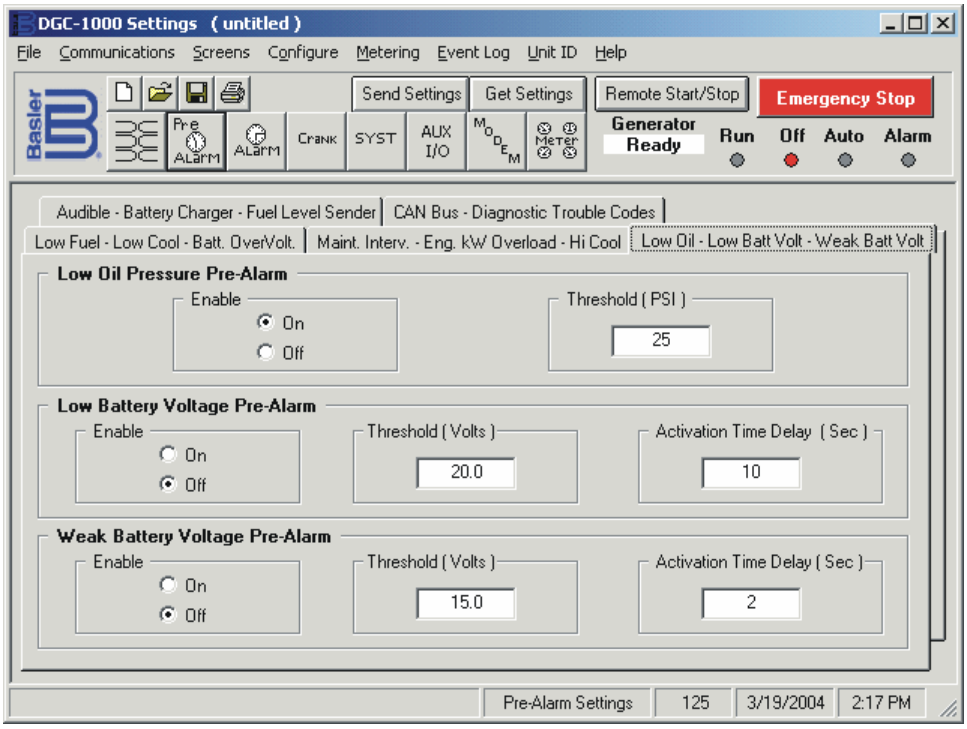

Figure 6-11. Pre-Alarms Screen, Low Oil-Low Batt Volt-Weak Batt Volt Tab

Low Oil Pressure Pre-Alarm – Enable. This setting enables and disables annunciation of a low oil pressure pre-alarm. A 10 second activation time delay prevents low oil pressure annunciation during engine startup.

Low Oil Pressure Pre-Alarm – Threshold. This setting selects the oil pressure level that will trigger a low oil pressure pre-alarm. A threshold setting of 3 to 150 psi or 20 to 1035 kPa may be entered. The unit of measure (psi or kPa) is determined by the Unit System setting of the System screen. A 10 second activation time delay prevents low oil pressure annunciation during engine startup.

Low Battery Voltage Pre-Alarm – Enable. This setting enables and disables annunciation of a low battery voltage pre-alarm.

Low Battery Voltage Pre-Alarm – Threshold (Volts). This setting selects the voltage level that will trigger a low battery voltage pre-alarm. The threshold is adjustable from 6 to 12 Vdc for 12 Vdc systems and 12 to 24 Vdc for 24 Vdc systems.

Low Battery Voltage Activation Time Delay (Sec). This setting selects the time delay from when low battery voltage is detected until a pre-alarm is annunciated. A time delay of 1 to 10 seconds may be entered.

Weak Battery Voltage Pre-Alarm – Enable. This setting enables and disables annunciation of a weak battery voltage pre-alarm.

Weak Battery Voltage Pre-Alarm – Threshold (Volts). This setting selects the voltage level that will trigger a weak battery voltage pre-alarm. The threshold is adjustable from 4 to 8 Vdc for 12 Vdc systems and 8 to 16 Vdc for 24 Vdc systems.

Weak Battery Voltage Pre-Alarm – Activation Time Delay (Sec). This setting selects the time delay from when weak battery voltage is detected until a pre-alarm is annunciated. A time delay of 1 to 10 seconds may be entered.

Audible-Battery Charger-Fuel Level Sender Tab

The Audible-Battery Charger-Fuel Level Sender Tab settings are shown in Figure 6-12 and described in the following paragraphs.

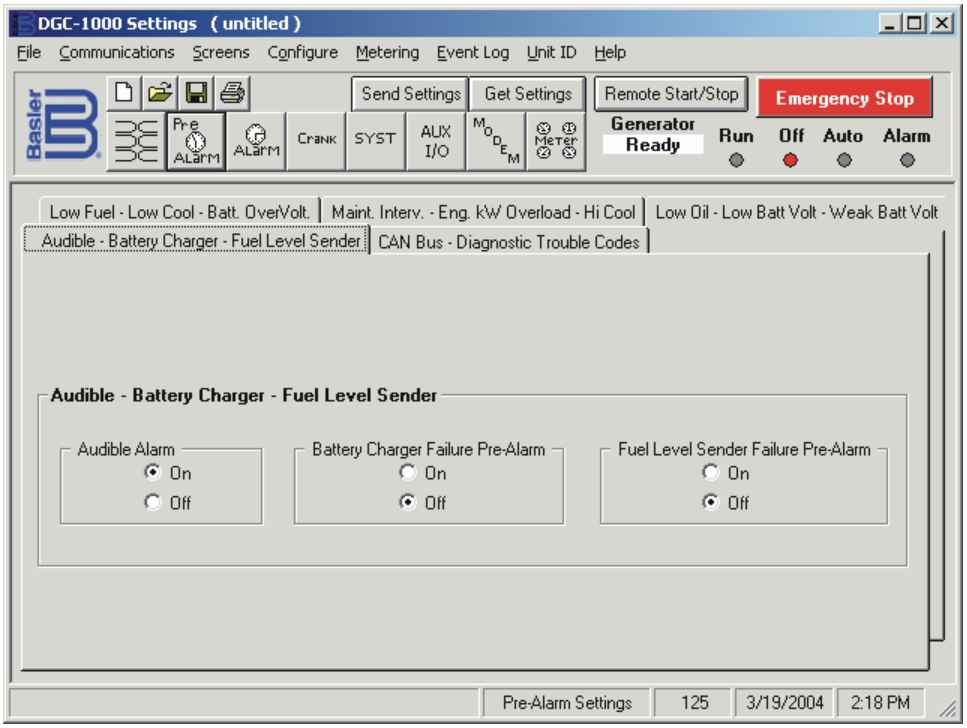

Figure 6-12. Pre-Alarms Screen, Audible-Battery Charger-Fuel Level Sender Tab

Audible Alarm. This setting enables and disables the KDGC-2001 horn output.

Battery Charger Failure Pre-Alarm. This setting enables and disables annunciation of a battery charger failure pre-alarm.

Fuel Level Sender Failure Pre-Alarm. This setting enables and disables annunciation of a fuel level sender failure pre-alarm.

CAN Bus – Diagnostic Trouble Codes Tab

The CAN Bus – Diagnostic Trouble Codes Tab settings are shown in Figure 6-13 and described in the following paragraphs.

Loss of ECU Communication – Pre Alarm Selection. This setting enables and disables annunciation of a loss of ECU communication pre-alarm. This pre-alarm can occur only when the KDGC-2001 is in Off mode and pulsing the ECU has failed to establish communication with the ECU. For details about ECU support, refer to Section 3, *Functional Description*.

Diagnostic Trouble Code Pre-Alarm – Enable. This setting enables and disables annunciation of diagnostic trouble codes (DTC) pre-alarms as they are received from the ECU.

Alarms

Click the **Alarm** button to access the Alarms screen or click **Screens** on the menu bar and click **Alarm Settings**. The Alarms screen consists of two tabs: Hi Cool-Low Fuel-Low Oil and Overspeed-Sender Fail.

Hi Cool-Low Fuel-Low Oil Tab

The Hi Cool-Low Fuel-Low Oil Tab settings are shown in Figure 6-14 and described in the following paragraphs.

Hi Cool Temperature Alarm – Alarm Enable. This setting enables and disables annunciation of a high coolant temperature alarm and engine shutdown. A 60 second activation delay prevents a Hi Coolant Temperature Alarm from occurring at engine startup.

Katolight Service - Master Repair Manual - Page 2145

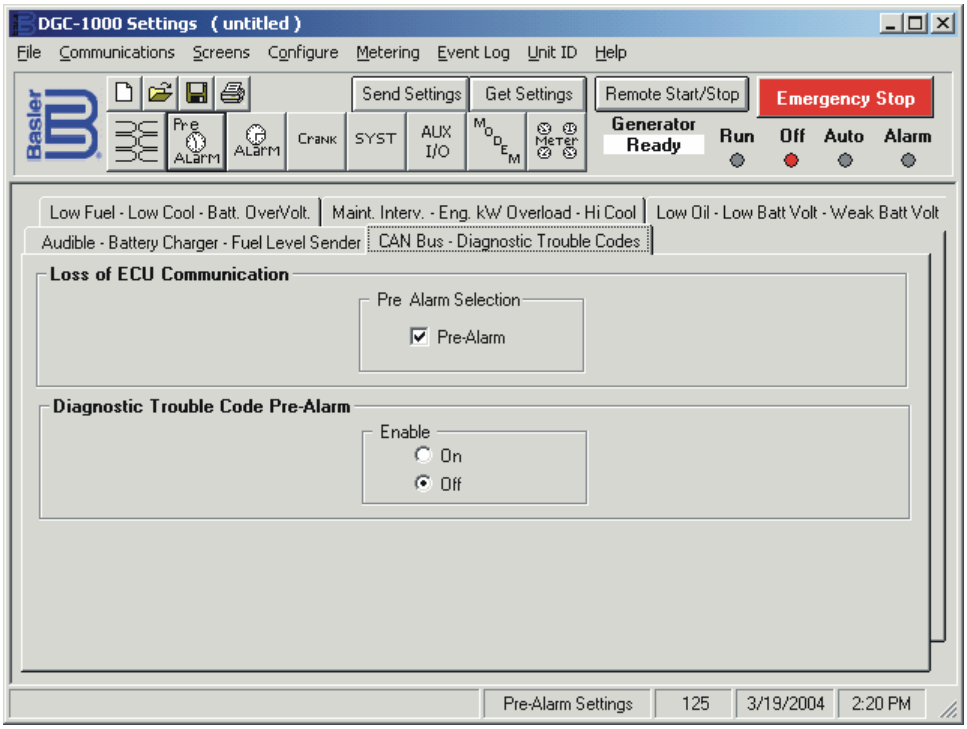

Figure 6-13. Pre-Alarms Screen, CAN Bus-Diagnostic Trouble Codes Tab

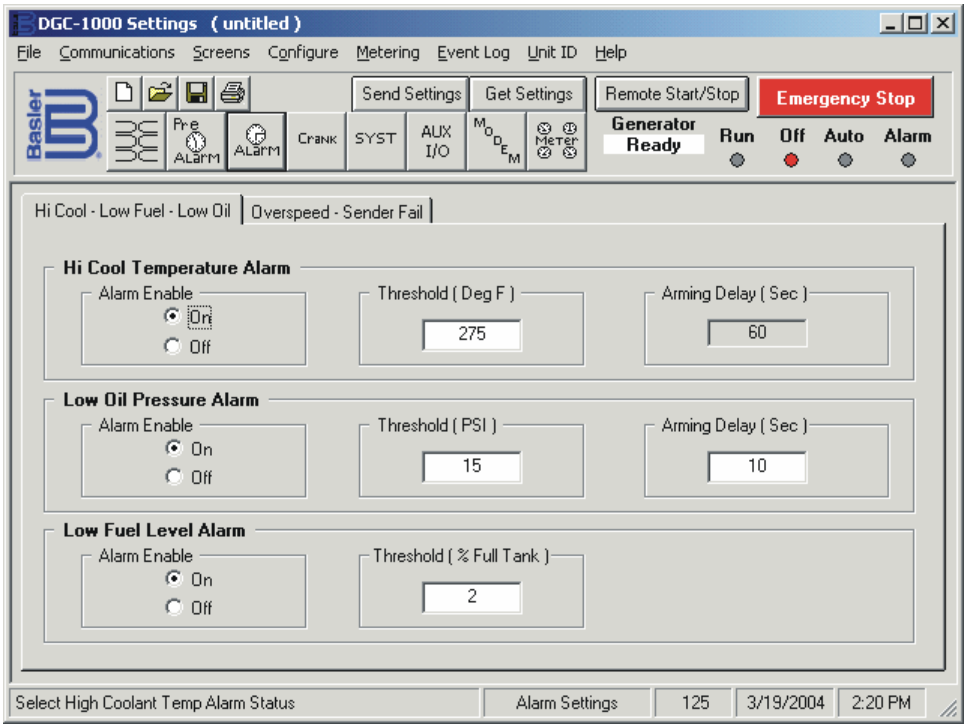

Figure 6-14. Alarms Screen, Hi Cool-Low Fuel-Low Oil Tab

Hi Cool Temperature Alarm – Threshold (Deg). This setting selects the coolant temperature that will trigger a high coolant temperature alarm. A threshold setting of 100 to 280 degrees Fahrenheit or 38 to 138 degrees Celsius may be entered. The unit of measure (Fahrenheit or Celsius) is determined by the Unit System setting of the System screen. A 60 second activation delay prevents a Hi Coolant Temperature Alarm from occurring at engine startup.

Hi Cool Temperature Alarm – Arming Delay (Sec). This read-only setting displays the time delay between when high coolant temperature is detected and an alarm is annunciated and the engine is shut down. The arming delay is fixed at 60 seconds.

Low Oil Pressure Alarm – Alarm Enable. This setting enables and disables annunciation of a low oil pressure alarm and engine shutdown. A 10 second activation time delay prevents low oil pressure annunciation during engine startup.

Low Oil Pressure Alarm – Threshold. This setting selects the oil pressure level that will trigger a low oil pressure alarm and engine shutdown. A threshold of 3 to 150 psi or 20 to 1035 kPa may be entered. The unit of measure (psi or kPa) is determined by the Unit System setting of the System screen. A 10 second activation time delay prevents low oil pressure annunciation during engine startup.

Low Oil Pressure Alarm – Arming Delay (Sec). This setting selects the time delay between when low oil pressure is detected and an alarm is annunciated and the engine is shut down. A time delay of 5 to 15 seconds may be entered. A 10 second activation time delay prevents low oil pressure annunciation during engine startup.

Low Fuel Level Alarm – Alarm Enable. This setting enables and disables alarm annunciation and engine shutdown for a low fuel level.

Low Fuel Level Alarm – Threshold (% Full Tank). This setting selects the fuel level that will trigger a low fuel level alarm. A threshold of 0 to 100 percent may be entered.

Overspeed-Sender Fail Tab

The Overspeed-Sender Fail Tab settings are shown in Figure 6-15 and described in the following paragraphs.

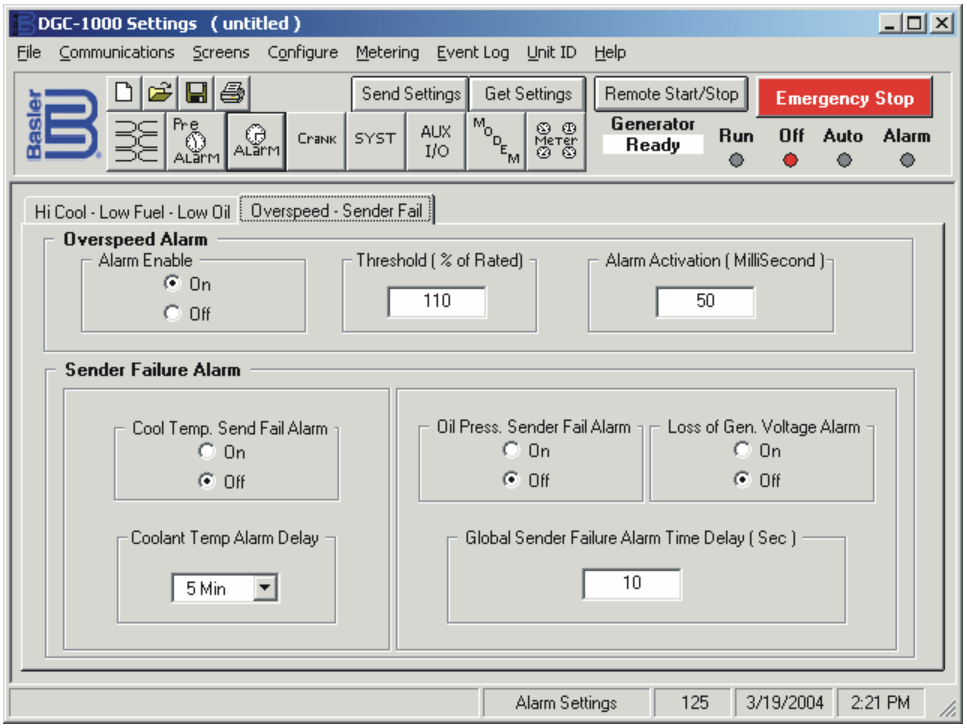

Figure 6-15. Alarms Screen, Overspeed-Sender Fail Tab

Overspeed Alarm – Alarm Enable. This setting enables and disables alarm annunciation and engine shutdown for an overspeed condition.

Overspeed Threshold (% of Rated). This setting selects the percentage of overspeed that triggers an overspeed alarm and engine shutdown. The threshold is adjustable from 105 to 140 percent of nominal speed.

Overspeed Alarm – Alarm Activation (MilliSecond). This setting adjusts the time delay from when an overspeed alarm condition is detected until it is annunciated and the engine is shut down. A time delay of 0 to 500 milliseconds may be entered.

Sender Failure Alarm – Cool Temp. Send Fail Alarm. This setting enables and disables alarm annunciation and engine shutdown for a coolant temperature sender failure.

Sender Failure Alarm – Coolant Temp Alarm Delay. This setting adjusts the time delay from when a coolant temperature sender failure is detected until it is annunciated and the engine is shut down. A time delay of 5, 10, 15, 20, 25, or 30 minutes may be selected.

Sender Failure Alarm – Oil Press. Sender Fail Alarm. This setting enables and disables alarm annunciation and engine shutdown for an oil pressure sender failure. An oil pressure sender failure alarm is annunciated and engine shutdown is initiated when the Global Sender Failure Alarm Time Delay setting expires.

Sender Failure Alarm – Loss of Gen. Voltage Alarm. This setting enables and disables alarm annunciation and engine shutdown for a loss of generator voltage. A loss of generator voltage alarm is annunciated when the generator voltage decreases below 1.5 Vac and the Global Sender Failure Alarm Time Delay expires. This setting does not disable a Sender Failure alarm for the speed signal source when generator frequency is selected as the speed signal source.

Sender Failure Alarm – Global Sender Failure Alarm Time Delay (Sec). This setting selects the time delay between when an oil pressure sender failure, loss of generator voltage failure, or MPU sender failure is detected and alarm annunciation and engine shutdown.

Engine Cranking

Click the **Crank** button to access the Engine Cranking screen or click **Screens** on the menu bar and click **Crank Settings**. Engine cranking settings are shown in Figure 6-16 and are described in the following paragraphs.

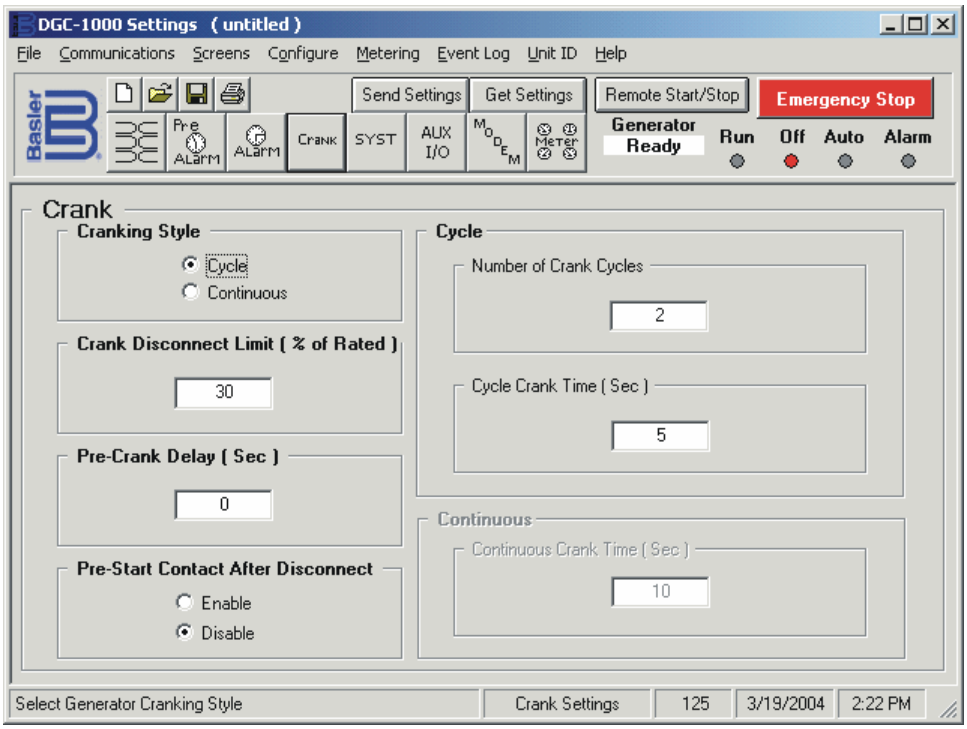

Figure 6-16. Engine Cranking Screen

Cranking Style. This setting selects the engine cranking method as continuous or cycle.

Crank Disconnect Limit (% of Rated). This setting selects the percentage of rated engine speed at which cranking is terminated. A disconnect limit of 10 to 100 percent may be entered.

Crank Disconnect Limit (% of Rated). This setting selects the percentage of rated engine speed at which cranking is terminated. A disconnect limit of 10 to 100 percent may be entered.

Pre-Crank Delay (Sec). This setting adjusts the time delay between initiating engine starting and beginning engine cranking. A delay of 0 to 30 seconds may be entered.

Pre-Start Contact After Disconnect. This setting selects whether or not the pre-start contact remains closed after disconnect occurs.

Cycle – Number of Crank Cycles. This setting, available only if cycle cranking is selected, selects the number of engine cranking attempts before an overcrank condition occurs and cranking is terminated. The crank cycles setting range is 1 to 7.

Cycle – Cycle Crank Time (Sec). This setting, available only if cycle cranking is selected, controls the duration of each cranking cycle. Each cranking period is separated by a resting period of equal length. A crank time of 5 to 15 seconds may be entered.

Continuous – Continuous Crank Time (Sec). This setting, available only if continuous cranking is selected, sets the duration of a single engine cranking attempt before an overcrank condition occurs. A continuous crank time of 1 to 60 seconds may be entered.

System

Click the **SYST** button to access the System Settings screen or click **Screens** on the menu bar and click **System Settings**. System settings are shown in Figure 6-17 and are described in the following paragraphs.

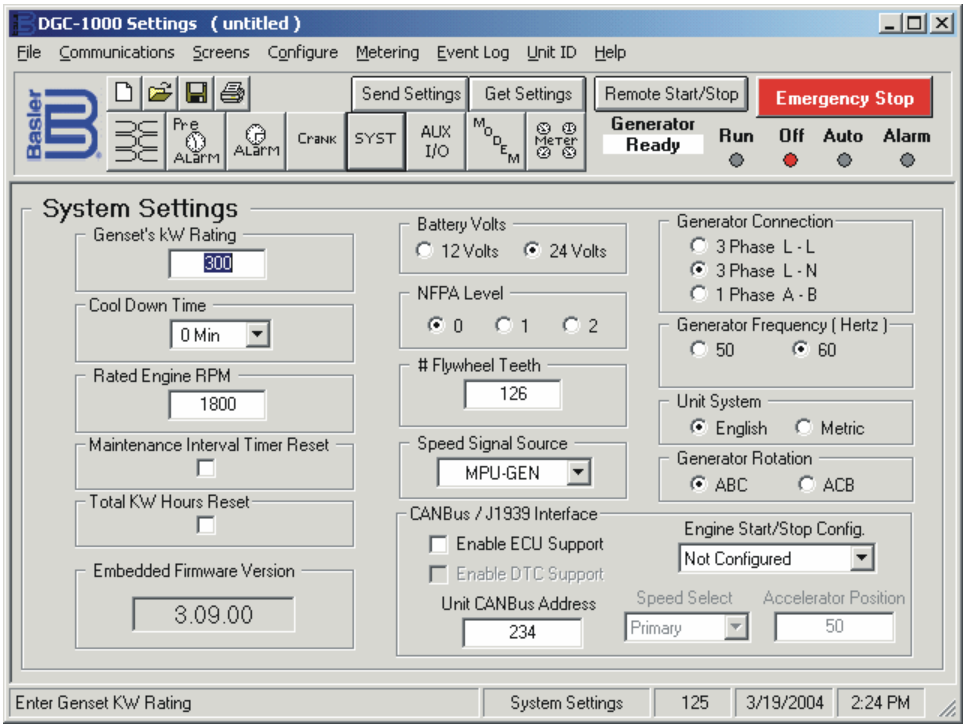

Figure 6-17. System Settings Screen

Genset's kW Rating. The generator power rating is entered in this field. A genset kW rating of 10 to 9,999 may be entered.

Cool Down Time. This setting selects the time between when the generator load is removed and the engine is stopped by a remote shutdown. A cool-down time of 0 to 60 minutes may be entered.

Rated Engine RPM. This setting selects the rated rotating speed of the engine. A value of 750 to 3,600 rpm may be entered.

Maintenance Interval Timer Reset. Selecting this checkbox terminates the maintenance interval pre-alarm and resets the maintenance interval timer back to the programmed value. The **Send Settings** button must be clicked for the reset to take effect.

Embedded Firmware Version. This read-only field displays the KDGC-2001 firmware version.

Total kW Hours Reset. Selecting this checkbox resets the accumulated kilowatt-hours to zero. The **Send Settings** button must be clicked for the reset to take effect.

Battery Volts. This setting selects either 12 Vdc or 24 Vdc as the starting battery nominal voltage.

NFPA Level. This setting selects whether or not NFPA (National Fire Prevention Association) requirements are in effect. If NFPA compliance is not required, a setting of 0 can be selected to disable the feature. Selecting NFPA level 1 or 2 affects KDGC-2001 operation in the following ways.

- The number of crank cycles is fixed at 3.
- Crank cycle time is fixed at 15 seconds.
- Continuous crank time is fixed at 45 seconds.
- The low coolant temperature pre-alarm setting is fixed at 70°F.

 # Flywheel Teeth. This setting selects the number of teeth on the engine flywheel. A value of 50 to 500 may be entered.

Speed Signal Source. This setting selects from three sources for obtaining the engine speed. The speed signal source can be obtained from the magnetic pickup (MPU), generator frequency, or derived from both the MPU and generator frequency. When both the MPU and generator frequency are selected as the speed signal source, the MPU has priority. If both MPU and generator frequency are selected and the MPU fails, generator frequency is used as the speed signal source and a non-programmable MPU sender failure pre-alarm is annunciated.

Generator Connection. This setting selects the configuration of the generator voltage sensing circuitry. Three-phase line-to-line, three-phase line-to-neutral, or single-phase A-phase to B-phase sensing may be selected.

Generator Frequency. This setting selects either 50 hertz or 60 hertz as the nominal generator frequency.

Unit System. This setting selects either the English or metric unit system for displaying the oil pressure and coolant temperature parameters in BESTCOMS and the KDGC-2001 HMI.

Generator Rotation. This setting selects either ABC or ACB phase rotation.

CANBus/J1939 Interface – Enable ECU Support. This setting enables and disables the KDGC-2001 CAN interface. When enabled, the CAN interface allows the KDGC-2001 to communicate with an engine control unit (ECU). This setting must be enabled in order to enable DTC (diagnostic trouble codes) support.

CANBus/J1939 Interface – Enable DTC Support. This setting enables and disables viewing of diagnostic trouble codes (DTC) reported by an ECU. Both the Enable ECU Support and Enable DTC Support settings must be enabled to view DTCs.

CANBus/J1939 Interface – Engine Start/Stop Config. This setting selects one of two engine start/stop configurations. Selecting Volvo Penta EDC III configures the KDGC-2001 for starting and stopping of the engine using the SAE J1939 communication interface. (The Enable ECU Support setting must be enabled.) Selecting Not Configured disables this feature.

CANBus/J1939 Interface – Unit CANBus Address. This setting selects the address to be used by the KDGC-2001 for SAE J1939 communication. A value of 0 to 253 may be entered.

CANBus/J1939 Interface – Speed Select. This setting tells the Volvo Penta EDC III to operate the engine at the primary or secondary base speed. If the engine is configured by Volvo for 60 hertz applications, the primary base speed is 1,800 rpm and the secondary base speed is 1,500 rpm. If the engine is configured by Volvo for 50 hertz applications, the primary base speed is 1,500 rpm and the secondary base speed is 1,800 rpm. This setting is enabled only when Volvo Penta III is selected as the Start/Stop Config. setting.

CANBus/J1939 Interface – Accelerator Position. This setting, expressed as a percentage, tells the Volvo Penta EDC III where to set the engine speed (trim) relative to the base speed. The range of the setting is the base speed ±120 rpm. A setting of 0% will cause the engine to run at 120 rpm below the base speed, a setting of 50% will cause the engine to run at the base speed, and a setting of 100% will cause the engine to run at 120 rpm above the base speed. The Accelerator Position setting is linear with a gain of 2.4 rpm/%. This setting is not saved in nonvolatile memory and defaults back to 50% after KDGC-2001 operating power is cycled. This setting is enabled only when Volvo Penta EDC III is selected as the Start/Stop Config. setting.

Input/Output Settings

Click the **AUX I/O** button to access the Input/Output Settings screen or click **Screens** on the menu bar and click **Input/Output Settings**. The Input/Output Settings screen consists of two tabs: Programmable Input Contact Setup and Aux Output Setup.

Programmable Input Contact Setup Tab

The Programmable Input Contact Setup tab settings of the Input/Output Settings screen consists of four identical groups of settings for each of the four programmable inputs. Tab settings are shown in Figure 6-18 and described in the following paragraphs.

Programmable Input – Function. This setting selects the function type that is used to trigger the corresponding programmable input. The functions available for triggering a programmable input are No Function, Auxiliary Input, and Single-Phase Override.

Programmable Input – Auxiliary Configuration. Either the Alarm or Pre-Alarm checkbox can be selected to annunciate an alarm or pre-alarm when the selected function triggers the programmable input.

Programmable Input – Auxiliary Input Label. This setting field is enabled only when Auxiliary Input is selected as the programmable input function. A user-assigned label (eight characters, maximum) can be entered for the corresponding programmable input.

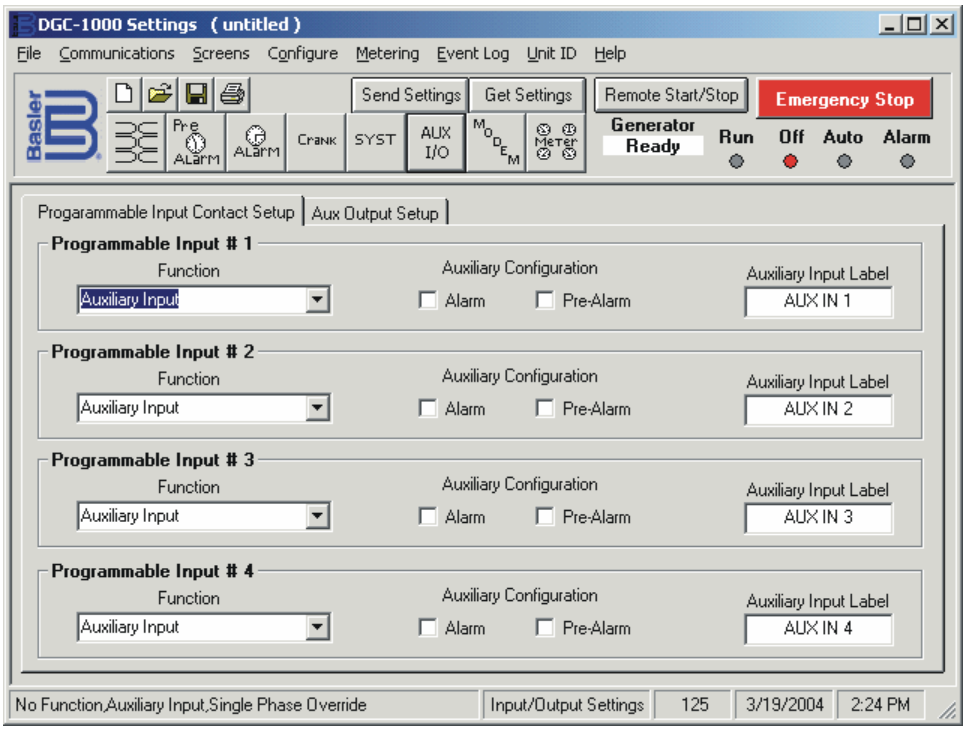

Figure 6-18. Input/Output Settings Screen, Programmable Input Contact Setup Tab

Aux Output Setup Tab

The Aux Output Setup tab settings of the Input/Output Settings screen are shown in Figure 6-19. (Not all settings are visible in the illustration.) The Aux Output Setup tab consists of a list of pre-alarms, alarms, and conditions that can be assigned to close programmable outputs 1 through 8. An output is selected by clicking the checkbox in the appropriate row and column. The following pre-alarms, alarms, and conditions can be assigned to one of the eight programmable outputs.

- High coolant temperature alarm
- Low oil pressure alarm
- Coolant temperature sender failure alarm
- Oil pressure sender failure alarm
- Loss of voltage sender failure alarm
- Speed sender failure alarm
- Low fuel alarm
- Low coolant level alarm
- Overcrank alarm
- Emergency stop alarm
- Overspeed alarm
- Low fuel pre-alarm
- Low coolant temperature pre-alarm
- Battery overvoltage pre-alarm
- kW overload pre-alarm
- High coolant temperature pre-alarm
- Low oil pressure pre-alarm
- Low battery voltage pre-alarm
- Weak battery voltage pre-alarm
- Battery charger failure pre-alarm

- Scheduled maintenance pre-alarm
- Switch not in Auto position
- Fuel leak/sender failure pre-alarm
- Cool down timer active
- Auxiliary input 1 closed
- Auxiliary input 2 closed
- Auxiliary input 3 closed
- Auxiliary input 4 closed
- Load button 1
- Load button 2
- Load button 3
- Load button 4

The last four items of the list are the four programmable load buttons that appear on the metering screen. These four buttons may be configured to operate any combination of the eight auxiliary output contacts. Load buttons 1 and 2 have fixed labels of Load 1 and Load 2. Load buttons 3 and 4 have programmable labels. Each label can consist of six alphanumeric characters, maximum. Refer to the *Metering* paragraphs for more information about using the Load buttons.

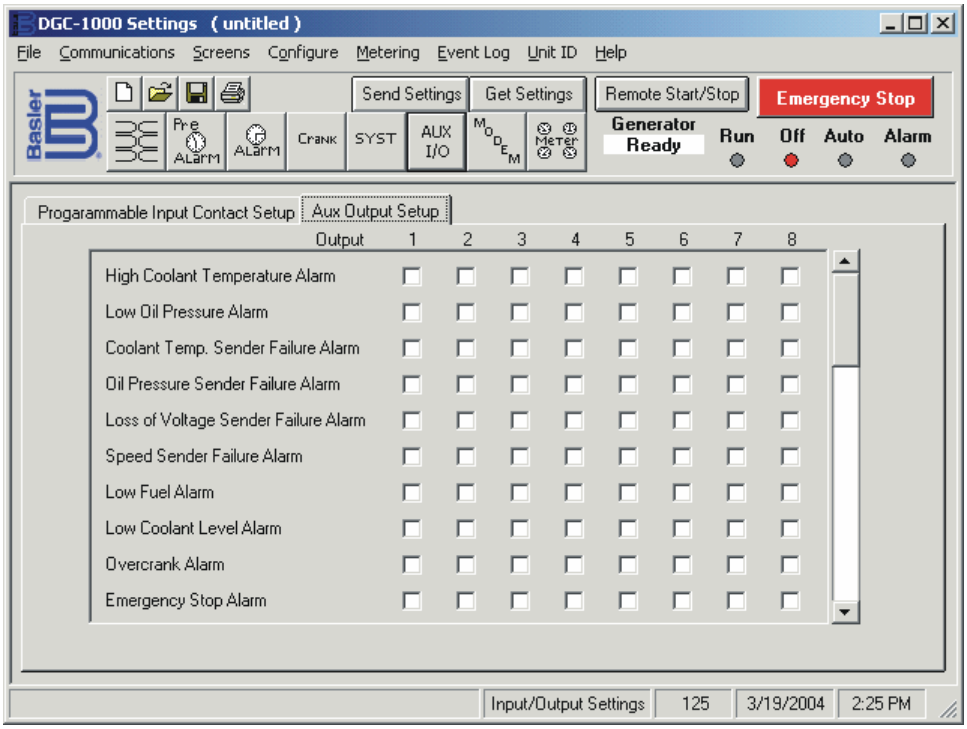

Figure 6-19. Input/Output Settings Screen, Aux Output Setup Tab

Modem Settings

If equipped with a modem (style X1X or X2X), the KDGC-2001 can dial an alphanumeric pager when any of the selected inputs are activated or selected events occur. Click the **MODEM** button to access the Modem Settings screen or click **Screens** on the menu bar and click **Modem Settings**. The Modem Settings screen consists of two tabs: Modem Setup and Modem Dialout Conditions.

NOTE

Upon completion of KDGC-2001 setup, communication with BESTCOMS must be closed to enable modem dial-in and dial-out.

When a fault occurs for which dial-out has been programmed, the modem will dial out and send a message. During the dial-out time, neither dial-in nor local RS-232 access is available. Access is available after the message has been sent or during the modem off-line delay. If no access is allowed, removing the fault and cycling the power to the KDGC-2001 resets the KDGC-2001 and allows access.

Modem Setup Tab

The Modem Setup tab settings are shown in Figure 6-20 and described in the following paragraphs.

Phone Number #1, #2, #3, and #4. These four setting fields contain the telephone numbers that the KDGC-2001 dials when the selected input is activated. The numbers are dialed in sequence until a connection is obtained.

Pager ID Number. These four setting fields contain the numbers that identify the specific pager that is being addressed when the corresponding telephone number (Phone Number #1, #2, #3, or #4) is dialed by the KDGC-2001.

Site Information. This programmable label identifies the source of the pager message. It is sent to the pager when the dial-out connection is made. Up to eight alphanumeric characters may be entered.

Inter Dialout Time Delay. This setting selects the length of time between dial-out attempts. The delay allows time for the modem to reset. A setting of 15, 30, 60, or 120 seconds may be entered.

Rings for Modem Answer. This setting selects the number of rings allowed before the modem picks up the line and negotiates a connection. Permitting several rings to occur before the modem picks up provides time for an operator to answer a telephone using the same line as the modem. This allows the modem and a telephone to share one line. A setting of 1 to 9 rings may be entered.

Page Buffer Limit. This setting is set equal to, or less than the specific pager buffer size. If the message length exceeds the Page Buffer Limit, another call is made and the message is continued. A setting of 80, 120, 160, or 200 characters may be entered.

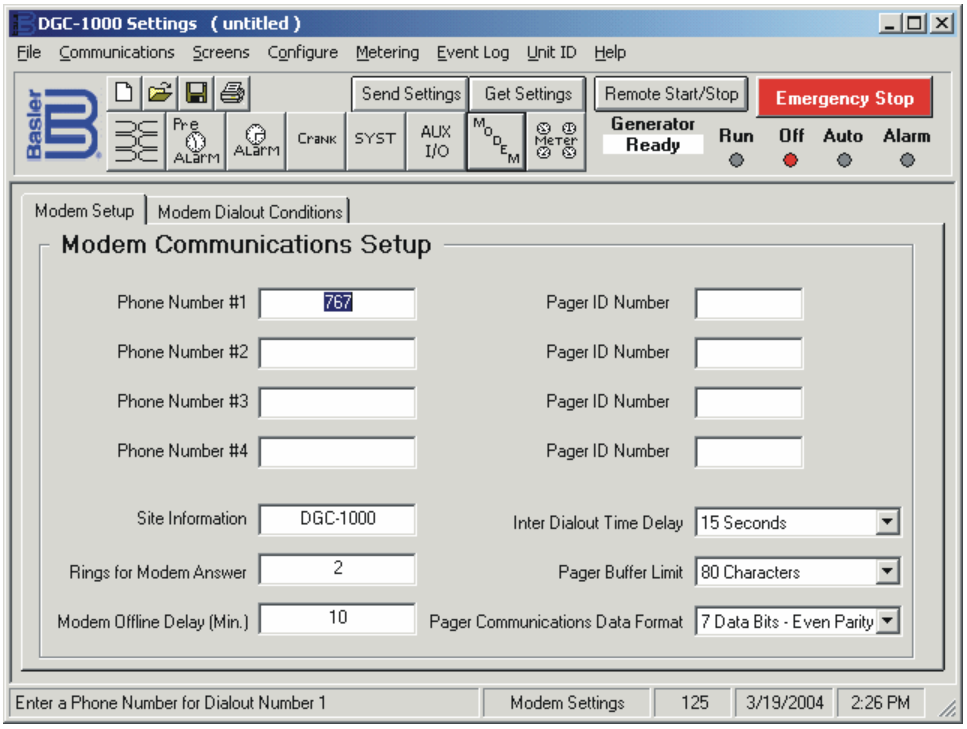

Figure 6-20. Modem Settings Screen, Modem Setup Tab

Modem Offline Delay (Min.). This setting controls the amount of time allowed between KDGC-2001 dial-out attempts. The Modem Offline Delay setting allows time for a user to dial into the KDGC-2001. A setting of 1 to 240 minutes may be entered.

Pager Communication Data Format. This setting controls the data format for the modem. Telelocator alphanumeric protocol (TAP version 1.7) is implemented by the KDGC-2001 for communication with a pager. The protocol specifies seven data bits with even parity. A setting of eight data bits with no parity may also be selected.

Modem Dialout Conditions Tab

The Modem Dialout Conditions tab settings are shown in Figure 6-21. (Not all settings are visible in the illustration.) The Modem Dialout Conditions Tab consists of a list of alarms, pre-alarms, and conditions that can be assigned to cause the KDGC-2001 to dial out. An output is selected by clicking the checkbox

in the appropriate row. The following alarms, pre-alarms, and conditions can be selected to cause the KDGC-2001 to dial out.

- High coolant temperature alarm
- Low oil pressure alarm
- Coolant temperature sender failure alarm
- Oil pressure sender failure alarm
- Loss of voltage sender failure alarm
- Low fuel alarm
- Low coolant level alarm
- Overcrank alarm
- Emergency stop alarm
- Overspeed alarm
- Low fuel pre-alarm
- Low coolant temperature pre-alarm
- Battery overvoltage pre-alarm
- kW overload pre-alarm
- High coolant temperature pre-alarm
- Low oil pressure pre-alarm
- Low battery voltage pre-alarm
- Weak battery voltage pre-alarm
- Battery charger failure pre-alarm
- Scheduled maintenance pre-alarm
- Switch not in Auto position
- Fuel leak/sender failure pre-alarm
- Cool-down timer active
- Auxiliary input 1 closed
- Auxiliary input 2 closed
- Auxiliary input 3 closed
- Auxiliary input 4 closed
- Active DTC pre-alarm
- Loss of ECU communication alarm
- Loss of ECU communication pre-alarm

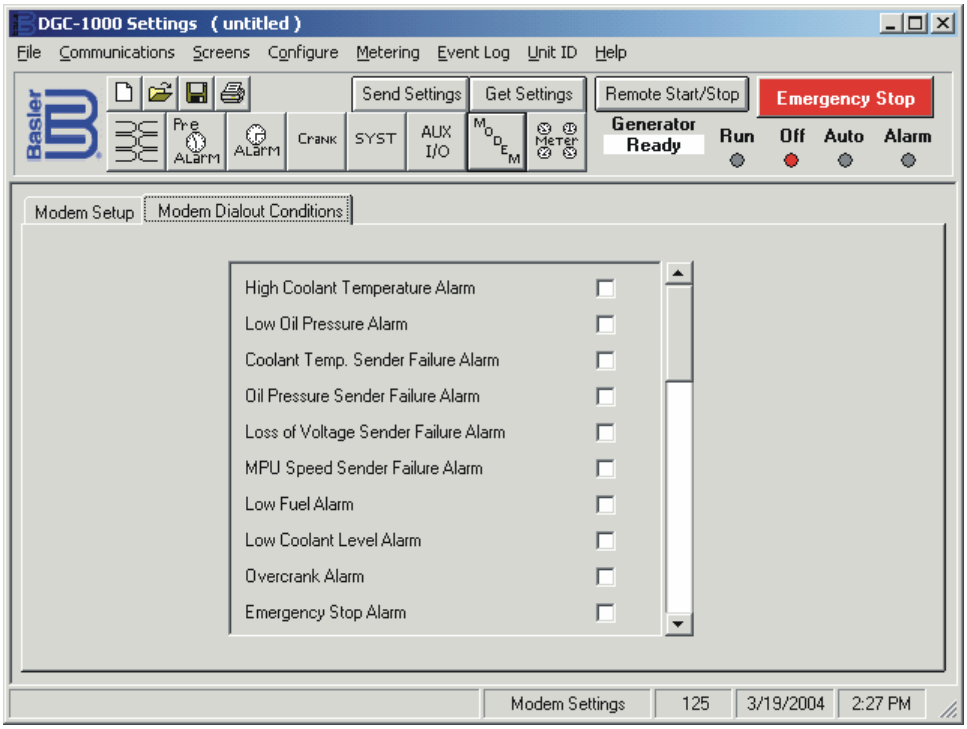

Figure 6-21. Modem Settings Screen, Modem Dialout Conditions Tab

Metering

Click the **Meter** button to access the Metering screen or click **Screens** on the menu bar and click **Metering**. The Metering screen consists of nine tabs.

- System
- Voltage
- Current
- Power
- General
- Summary
- Alarms
- ECU DTC Info
- ECU Data

The ECU DTC Info tab is enabled only when ECU and DTC support is enabled on the System Settings screen. The ECU Data tab is enabled only when ECU support is enabled on the System Settings screen.

When viewing the Metering screen, metering can be enabled and disabled by clicking the **Meter** button. When viewing other screens, metering can be enabled and disabled through the **Metering** menu on the menu bar

System Tab

System tab metering values are shown in Figure 6-22 and described in the following paragraphs.

Coolant Temp. Two metering fields display engine coolant temperature in degrees Fahrenheit and degrees Celsius.

Oil Pressure. Two metering fields display engine oil pressure in pounds per square inch and kilopascals.

Battery Voltage. This metering value indicates the battery voltage level.

Fuel Level. This metering value indicates the percentage of remaining fuel.

Speed. This metering value indicates the rotational speed of the engine in revolutions per minute.

Load. This metering value, expressed as a percentage of the genset power rating, indicates the genset load. The genset power rating is entered through the Genset's kW Rating setting on the System Settings screen.

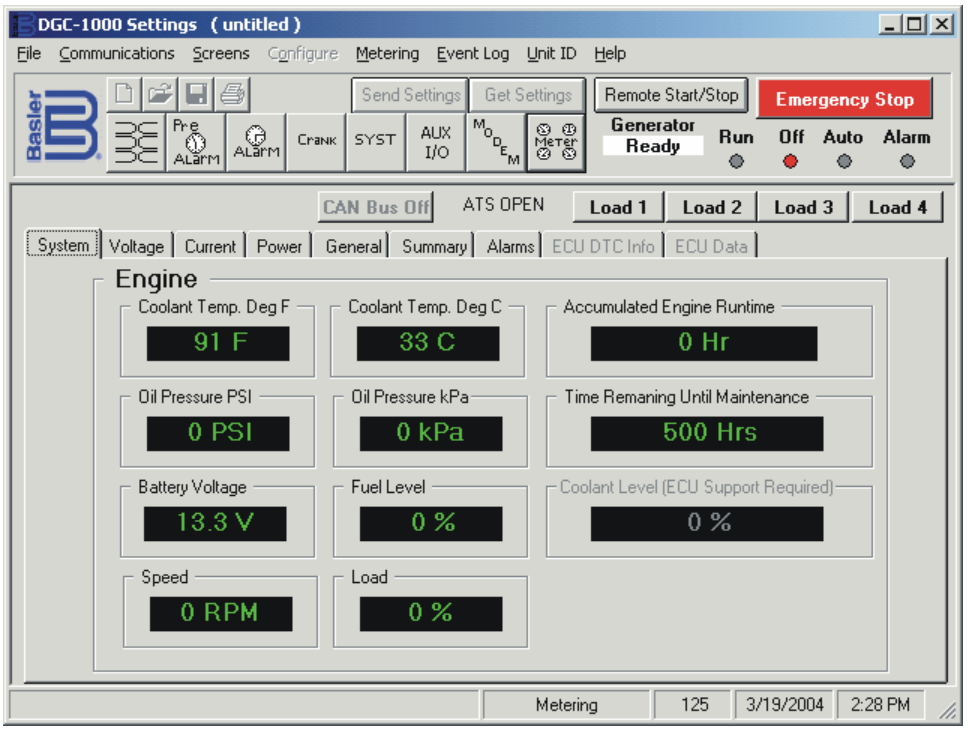

Figure 6-22. Metering Screen, System Tab

Accumulated Engine Runtime. This metering value indicates the total, accumulated hours of engine runtime. Accumulated engine running time can be adjusted by a user with OEM-level password access. See *Run Time and KW Hours* for more information.

Time Remaining Until Maintenance. This value indicates the engine runtime left until the next scheduled maintenance.

Coolant Level. This metering value, expressed as a percentage of total coolant capacity, indicates the fluid level of the engine cooling system. ECU support is required to enable this metering value.

Voltage Tab

Metering values displayed on the Voltage tab (Figure 6-23) depend upon the Generator Connection setting of the System Settings screen.

When the Generator Connection setting is 3 Phase L-L, the Voltage tab displays rms voltage for A-phase to B-phase, B-phase to C-phase, and C-phase to A-phase.

When the Generator Connection setting is 3 Phase L-N, the Voltage tab displays rms voltage for A-phase to B-phase, A-phase to Neutral, B-phase to C-phase, B-phase to Neutral, C-phase to A-phase, and C-phase to Neutral.

When the Generator Connection setting is 1 Phase A-B, the Voltage tab displays rms voltage for A-phase to B-phase, A-phase to Neutral, and B-phase to Neutral.

Current Tab

Metering values displayed on the Current tab (Figure 6-24) depend upon the Generator Connection setting of the System Settings screen.

When the Generator Connection setting is 3 Phase L-L or 3 Phase L-N, the Current tab displays rms current for phases A, B, and C.

When the Generator Connection setting is 1 Phase A-B, the Current tab displays rms current for phases A and B.

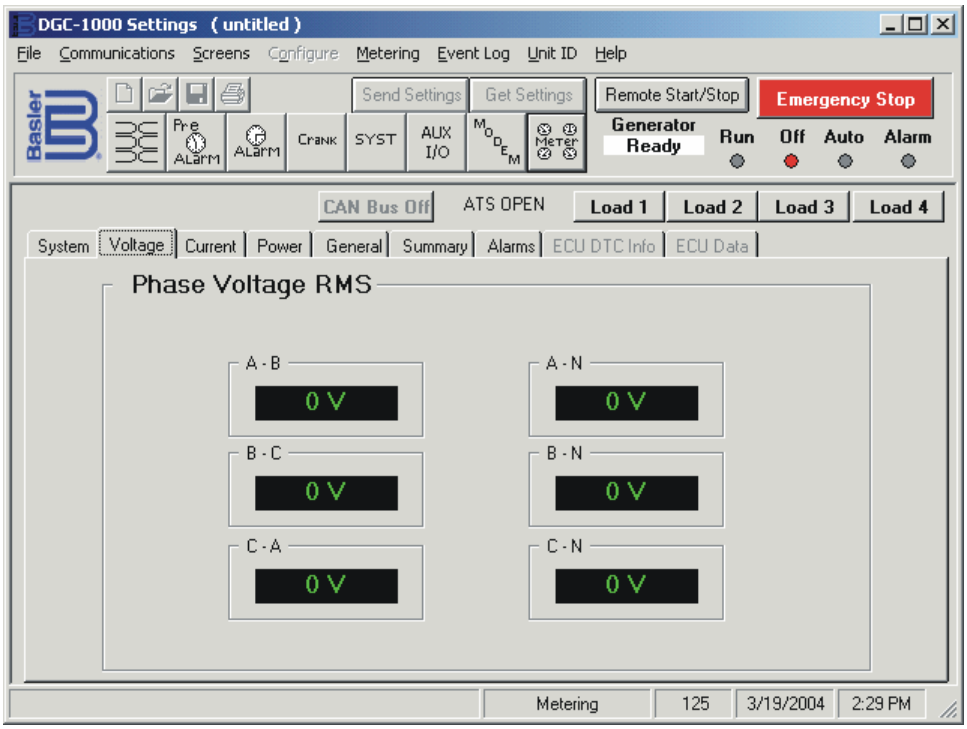

Figure 6-23. Metering Screen, Voltage Tab

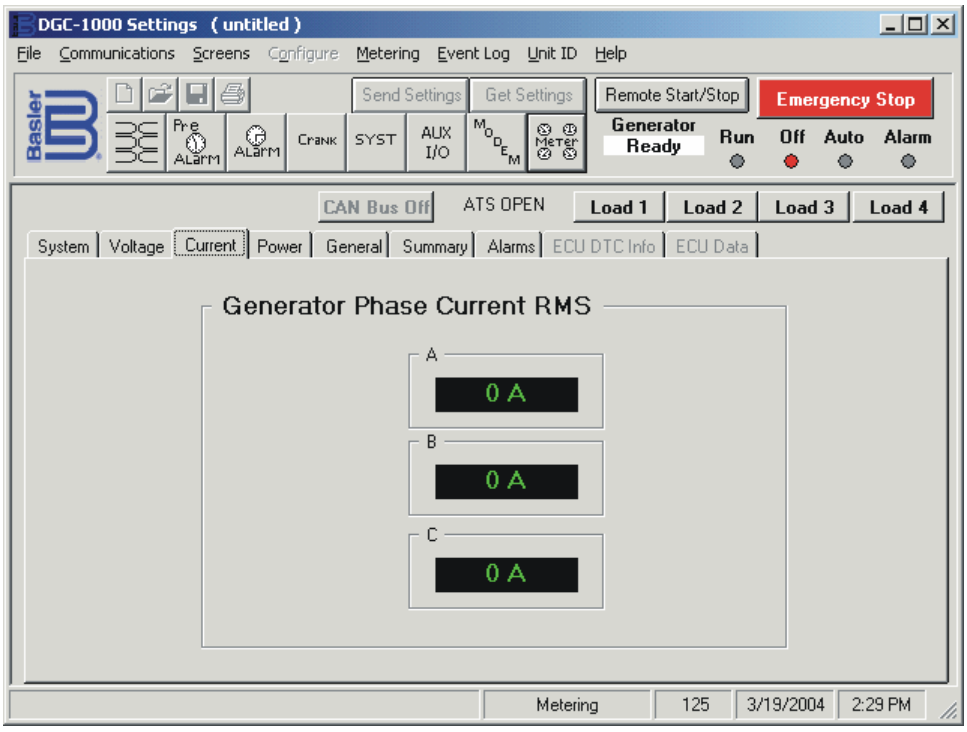

Figure 6-24. Metering Screen, Current Tab

Power Tab

The Power tab (Figure 6-25) displays generator apparent power (kVA) and generator real power (kW). Metered power values depend upon the Generator Connection setting of the System Settings screen.

When the Generator Connection setting is 3 Phase L-L or 3 Phase L-N, metered power values are displayed for phases A, B, C, and all phases combined.

When the Generator Connection setting is 1 Phase A-B, metered power values are displayed for phases A, B, and both phases combined.

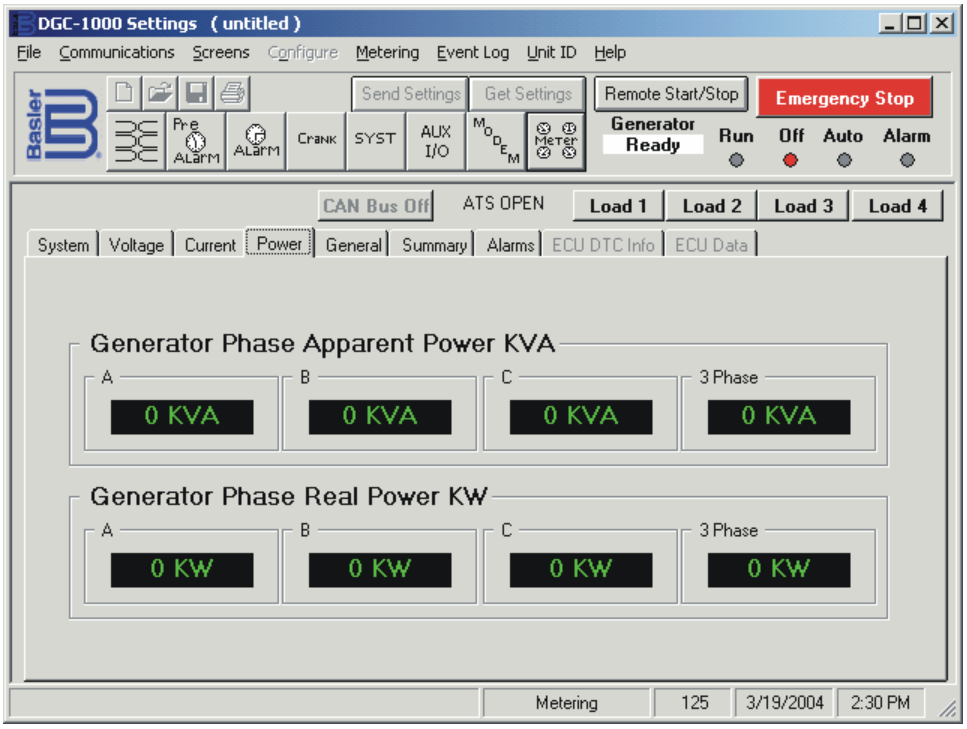

Figure 6-25. Metering Screen, Power Tab

General Tab

General tab metering values are displayed in Figure 6-26 and described in the following paragraphs.

Power Factor. This value is the calculated result of the real generator power divided by the apparent generator power (W ÷ VA).

Gen Frequency. This metering value indicates the frequency, in hertz, of the monitored generator voltage.

Total KW Hours. This metering value displays the accumulated generator kilowatt-hours. Total kilowatt-hours can be reset through the Total KW Hours Reset checkbox on the System Settings screen. Total kilowatt-hours can also be adjusted by a user with OEM-level password access. See *Run Time and KW Hours for* more information.

Summary Tab

The Summary tab (Figure 6-27) displays all of the metering values contained on the System, Voltage, Current, Power, and General tabs. Voltage, current, and power metering values displayed on the Summary tab depend upon the Generator Connection setting of the System Settings screen.

Alarms Tab

Alarms tab indicators (Figure 6-28) are divided into four categories: Pre-Alarms, Alarms, Sender Failure Alarms, and EPS.

Pre-Alarms, Alarms, and Sender Failure Alarms. When a pre-alarm or an alarm becomes active, the indicator next to the pre-alarm or alarm label changes from gray to green. In order for a pre-alarm to be annunciated, it must be enabled through the settings of the Pre-Alarms screen. In order for an alarm or sender failure alarm to be annunciated, it must be enabled through the settings of the Alarms screen.

EPS – Supplying Load. When the generator is supplying current to the load, this indicator changes from gray to green.

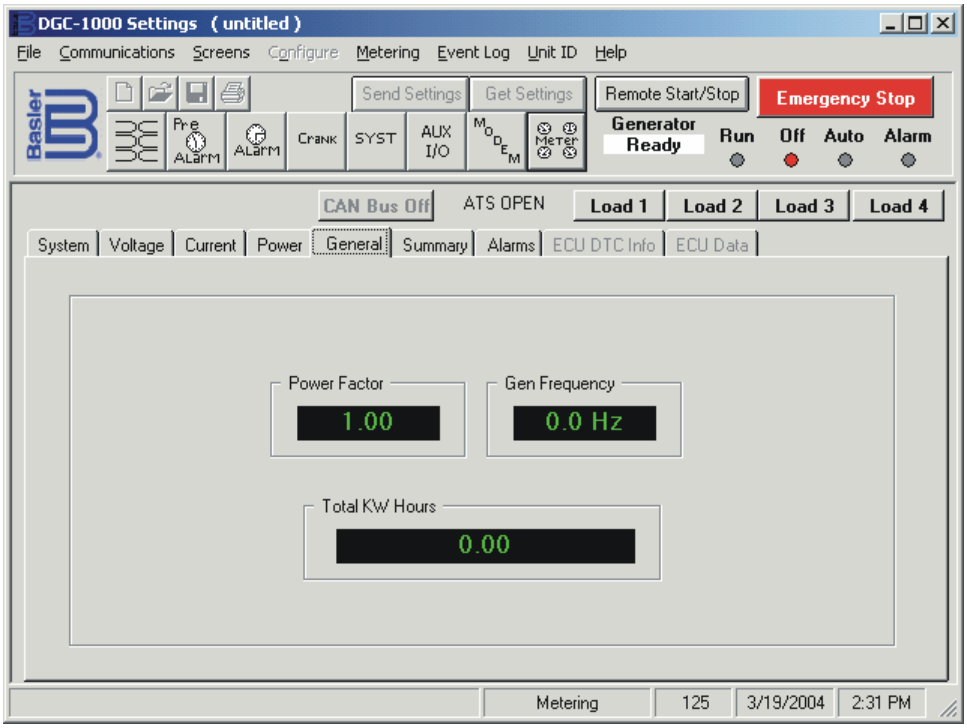

Figure 6-26. Metering Screen, General Tab

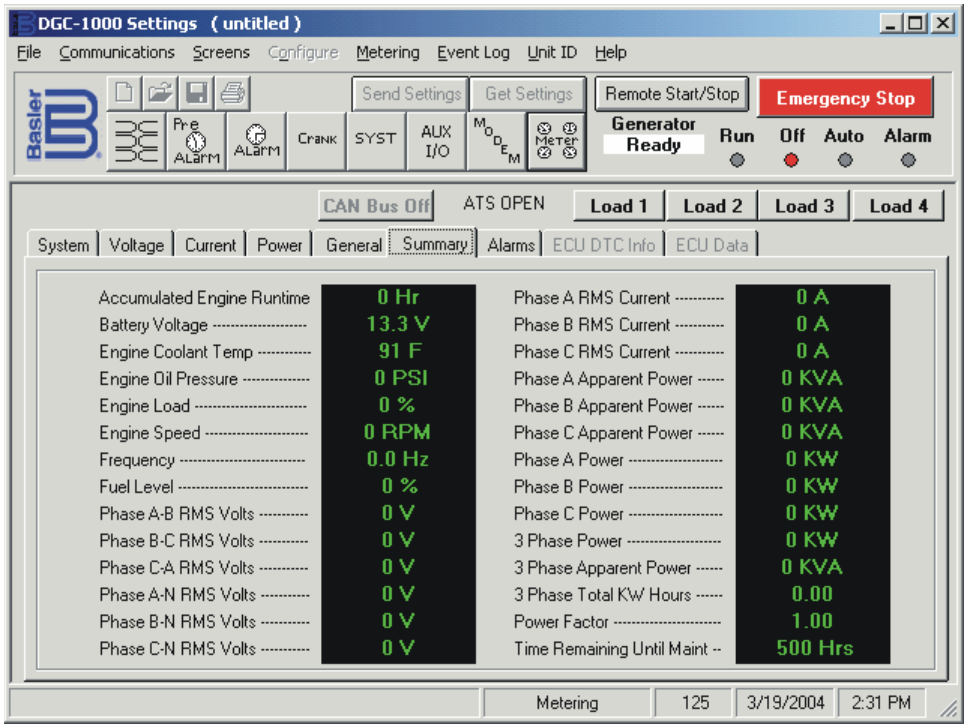

Figure 6-27. Metering Screen, Summary Tab

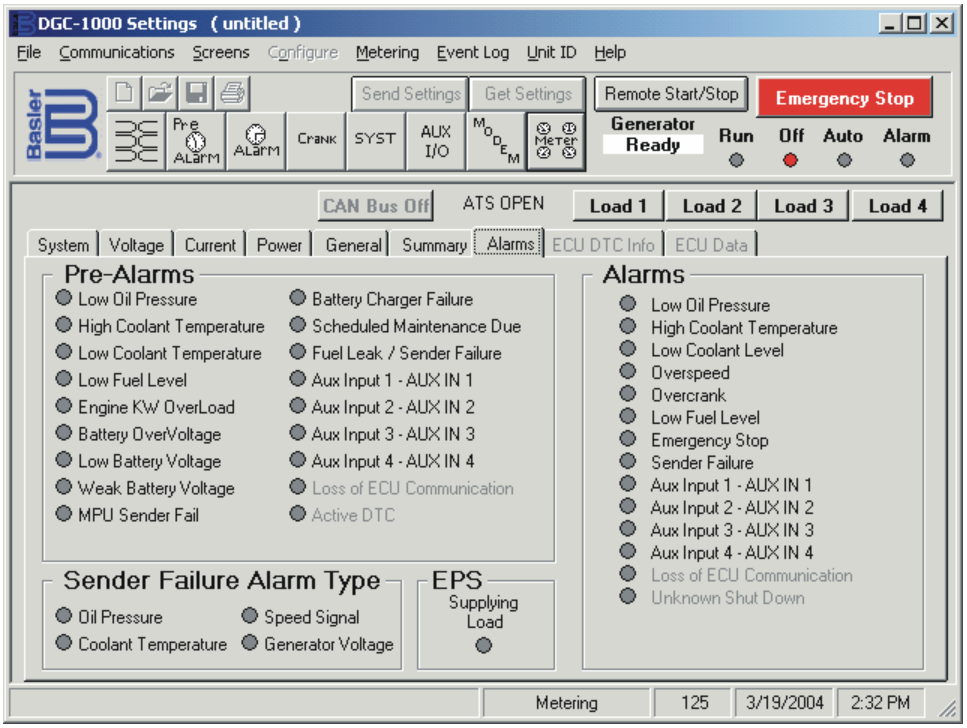

Figure 6-28. Metering Screen, Alarms Tab

ECU Data Tab

The ECU Data tab displays parameters obtained by the ECU (engine control unit) and reported through the SAE J1939 interface to the KDGC-2001. Access to the ECU Data tab is enabled only when the Enable ECU Support checkbox of the System Settings screen is selected. Parameters displayed on the ECU Data tab are shown in Figure 6-29.

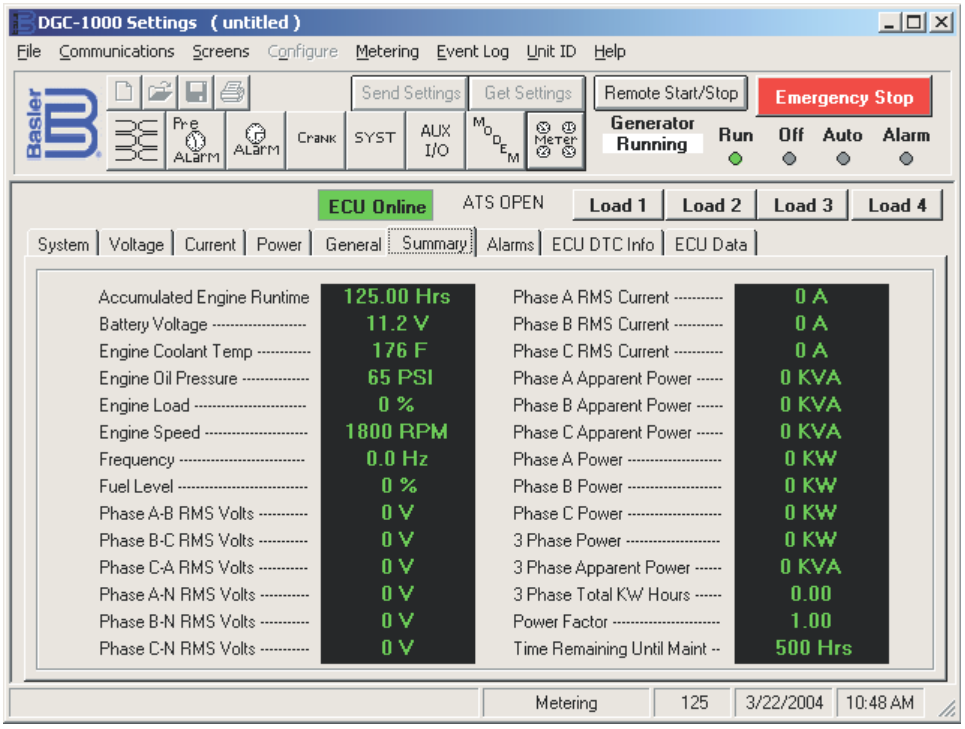

Figure 6-29. Metering Screen, ECU Data Tab

Clicking the **View Engine Configuration** button on the ECU Data tab displays the Engine Configuration screen shown in Figure 6-30. This screen displays a list of specifications that are specific to the engine being controlled by the ECU.

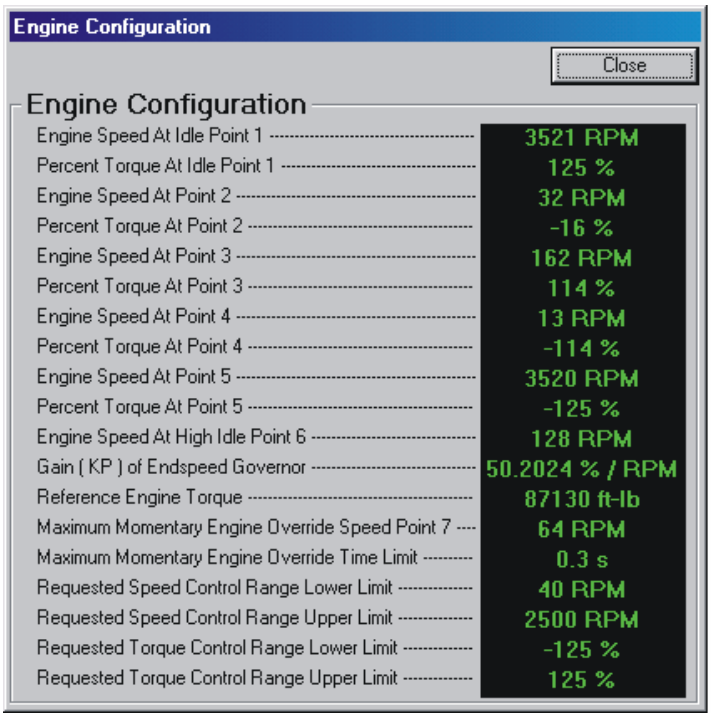

Figure 6-30. Engine Configuration Screen

ECU DTC Info Tab

The ECU DTC Info tab (Figure 6-31) displays both active and previously logged diagnostic trouble codes (DTCs) obtained from the ECU. ECU DTC Info tab indicators and controls are described in the following paragraphs.

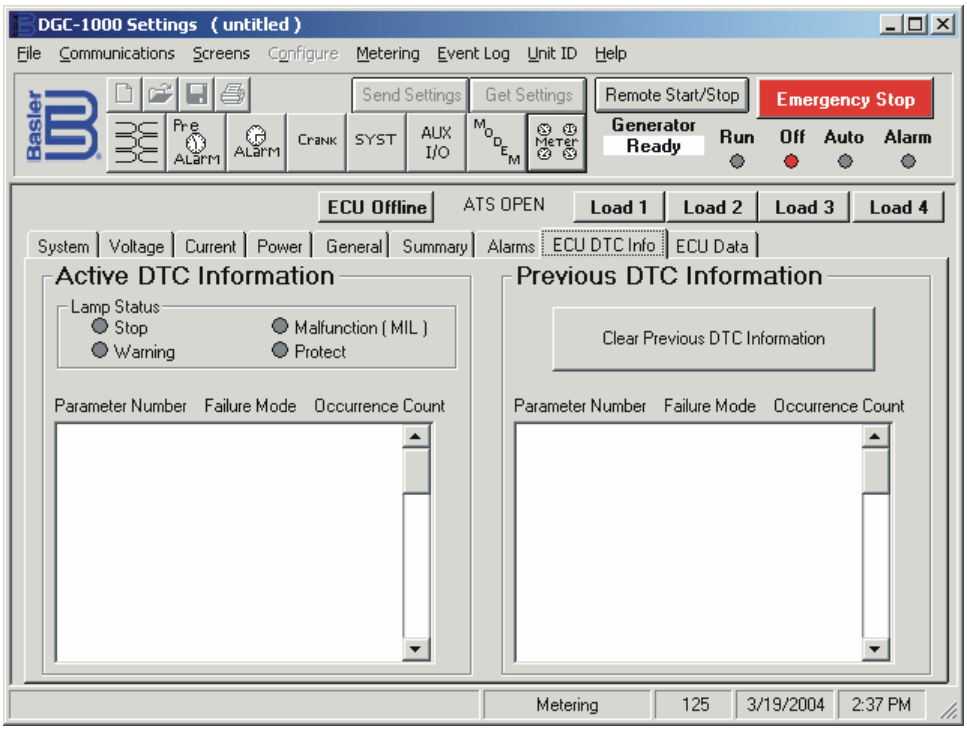

Figure 6-31. Metering Screen, ECU DTC Info Tab

Lamp Status – Stop. This indicator lights when DTC information warrants stopping the engine.

Lamp Status – Warning. This indicator lights when DTC information indicates an engine problem that is significant, but does not require immediate shutdown of the engine.

Lamp Status – Malfunction. This indicator lights when an emission related DTC is logged.

Lamp Status – Protect. This indicator lights when DTC information points to a problem that is probably not related to the engine's electronic subsystem.

Clear Previous DTC Information. Clicking this button clears the previously logged DTC information from the ECU DTC Info tab.

Programmable Buttons

These four buttons, labeled Load 1, Load 2, Load 3, and Load 4, may be configured (through the Input/Output Settings screen Aux Output Setup tab) to operate any combination of the eight auxiliary output contacts. When one of the buttons is clicked, the corresponding auxiliary output changes state. A button's color changes from gray to red when the controlled output is closed and changes from red to gray when the controlled output is opened.

Buttons Load 1 and Load 2 have fixed labels. The labels on buttons Load 3 and Load 4 can be changed to a user-selected label consisting of up to six alphanumeric characters.

If the KDGC-2001 is in Off mode or has an alarm, the programmable buttons have no effect on the auxiliary output contacts.

ATS Status Indicator

The ATS status indicator, located to the left of the Load 1 button, displays *ATS OPEN* when the automatic transfer switch contact input is open. *ATS CLOSED* is displayed when the automatic transfer switch contact input is closed.

ECU Status/Control Button

This button indicates the status of ECU communication and is used to pulse the ECU when ECU support is enabled.

When ECU support is disabled, the button is grayed out and indicates *CAN Bus Off*.

When ECU support is enabled (through the System Settings screen) and the ECU is offline, the button indicates *ECU Offline*. When this condition exists and the button is clicked, the ECU is pulsed.

REAL-TIME CLOCK

The KDGC-2001 real-time clock settings can be adjusted and verified through the Set Real Time Clock dialog box (Figure 6-32). Click **Configure** on the menu bar and click **Real Time Clock**.

To set the KDGC-2001 real-time clock with the PC's time and date settings, perform the following steps.

1. Click the **Display PC Date and Time** button. The PC's clock settings are displayed in the date and time fields. (The date and time fields of the Set Real Time Clock dialog box cannot be changed manually.)
2. Select the **Automatically adjust for Daylight Savings Time** checkbox if automatic compensation for daylight savings time is desired.
3. Click the **Send to DGC** button to set the KDGC-2001 real-time clock with the PC's time and date.

The KDGC-2001 real-time clock settings can be viewed and verified by clicking the **Display DGC Settings** button.

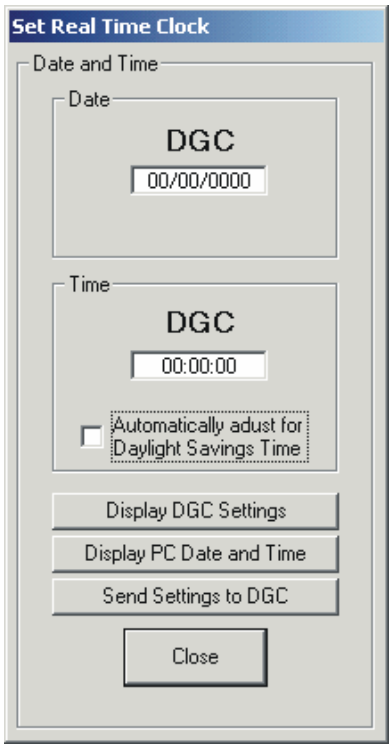

Figure 6-32. Set Real Time Clock Screen

PROGRAMMABLE SENDERS

Click **Configure** on the menu bar and click **Programmable Senders** to access the Programmable Senders screen. (If the Metering screen is being viewed, metering will need to be disabled to access the Configure menu.)

The Programmable Senders screen has three tabs: Coolant Temperature, Oil Pressure, and Percent Fuel Level. Because the setting fields and buttons of each tab are so similar, only the Coolant Temperature tab settings (Figure 6-33) are described here.

Get Cool. Data From DGC. If communication with a KDGC-2001 is enabled, clicking this button retrieves the sender data points from the KDGC-2001 and refreshes the graph.

Send Cool. Data To DGC. Clicking this button sends the displayed data points to the KDGC-2001.

Load Cool. Settings File. Clicking this button displays an Open dialog box where a sender file containing sender data points can be retrieved. Some standard data point files for the three senders are included with BESTCOMS. Coolant temperature sender files have a CS1 extension, oil pressure sender files have an OS1 extension, and fuel level sender files have an FS1 extension.

Create Cool. Settings File. Clicking this button displays a Save As dialog box where the transducer data points created in BESTCOMS can be saved in a sender file. While it is possible to create individual sender files for each transducer, it is not necessary. The data for all three senders is automatically saved with the KDGC-2001 configuration file. The *Settings Files* sub-section contains information about creating KDGC-2001 configuration files.

Resistance. The 11 resistance points in this column are not adjustable. The KDGC-2001 has been factory calibrated at these points to maximize accuracy.

Degrees F/Degrees C. Temperature values entered in this column must always maintain a descending order. If English units are used, adjacent coolant temperature points must be separated by at least 2°F. If metric units are used, adjacent oil pressure points must be separated by at least 7 kPa. The coolant temperature range is 32 to 400°F or 0 to 240°C. The oil pressure setting range is 0 to 250 psi or 0 to 1,725 kPa. The fuel level setting range is 0 to 100%.

Sender Slope. If a sender requires a positive slope, Positive can be selected to invert the values in the Resistance column.

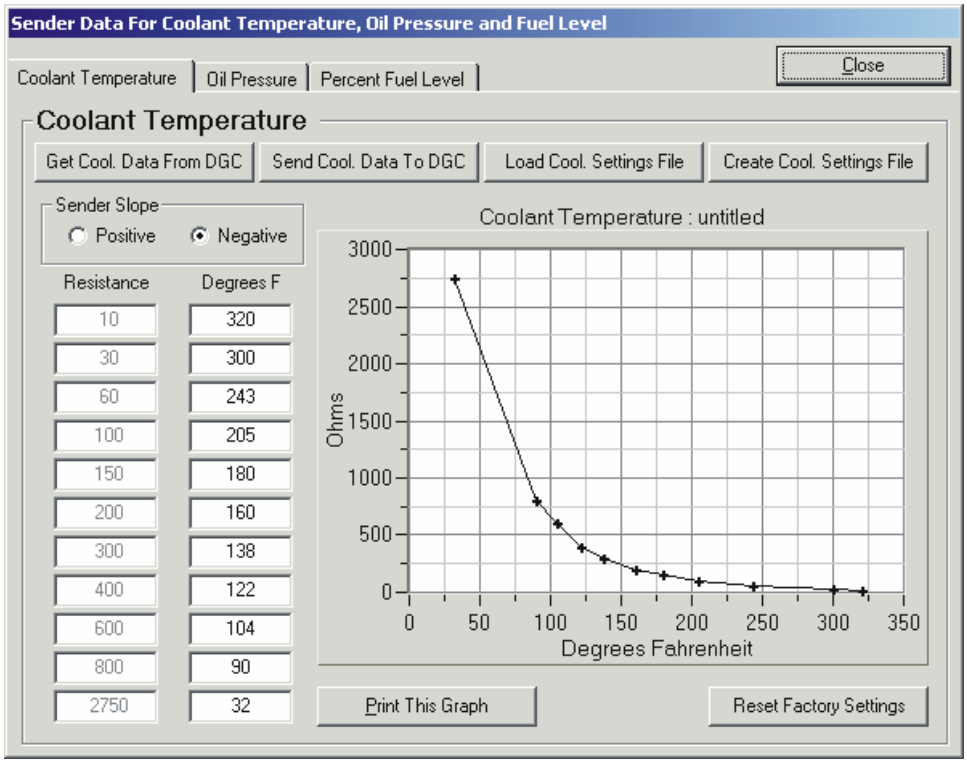

Figure 6-33. Programmable Senders Screen, Coolant Temperature Tab

Print This Graph. Clicking this button displays a print preview screen that allows selection of a printer, page orientation, and graph image magnification. Clicking **Print** sends the graph image to the target printer. Clicking **Close** returns to the Programmable Senders screen.

Reset Factory Settings. Clicking this button restores the factory default data points in the Degrees F/Degrees C column and graph. This does not update the data points in the KDGC-2001. the KDGC-2001 is updated by clicking the **Send Cool. Data to DGC** button.

NOTE

When metric values are used and changes are made to the oil pressure sender data points, undesirable internal rounding of some data points can occur. For example, select 700 kPa for one data point, create a sender file, and the value is rounded to 697. Rounding that occurs will never be greater than 4 kPa.

RUN TIME AND KW HOURS

The accumulated running time and kilowatt-hours for a genset can be adjusted by accessing the Run Time and KW Hours dialog box shown in Figure 6-34. Click **Configure** on the menu bar and click **Engine Runtime & KW Hours**. Unless access is gained by using the OEM-level password, the Engine Runtime & KW Hours selection will not appear in the Configure pull-down menu.

To adjust the accumulated engine run time, enter the desired time in the Hours and Minutes fields and click the **Update DGC Accumulated Engine Runtime** button.

To adjust the genset total kilowatt-hours, enter the desired value in the KW Hours field and click the **Update DGC Total KW Hours** button.

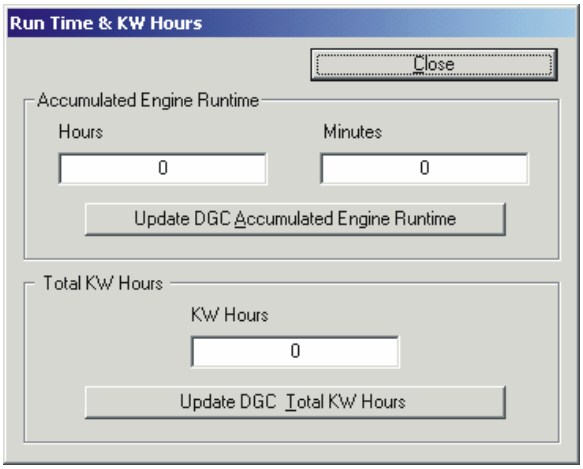

Figure 6-34. Run Time and KW Hours Dialog Box

ENGINE CONTROL UNIT (ECU) TIMERS

Four timers are provided to customize the timing of pulsing the ECU for periodic updates. These timers are adjusted through the ECU Timers dialog box. This dialog box is accessed by clicking **Configure** on the menu bar and clicking **ECU Timers**.

The setting fields of the ECU Timers dialog box are shown in Figure 6-35 and described in the following paragraphs.

Engine Shut Down (Sec.). When going from Running to Shut Down, this setting adjusts the length of time that the KDGC-2001 stays disconnected from the ECU before starting the first pulse. The Engine Shut Down setting range is 1 to 60 seconds.

Setting Time (Millisec.). This setting adjusts the time to gather data after connecting to the ECU during the pulsing state. This allows all metered values to be sent and ramp up. Metered values are sent by the ECU at different rates as designated by the SAE J1939 protocol. Values sent by the ECU may be low initially; the ECU takes time to average its own data. The Setting Time setting range is 5,500 to 30,000 milliseconds.

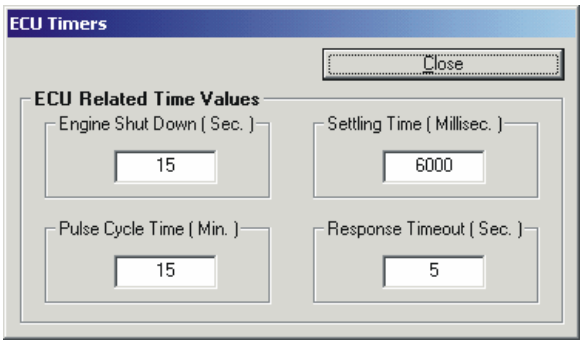

Figure 6-35. ECU Timers Dialog Box

Pulse Cycle Time (Min.). This setting adjusts the time that the KDGC-2001 waits to pulse the ECU again. The Pulse Cycle Time setting range is 1 to 60 minutes.

Response Timeout (Sec.). This setting controls the time that communication is attempted with the ECU while the KDGC-2001 is in the Pulsing or Connecting state. The Response Timeout setting range is 1 to 50 seconds.

EVENT LOG

The event log provides a historical record of events detected by the KDGC-2001. Click **Event Log** on the menu bar to access the event log screen (Figure 6-36).

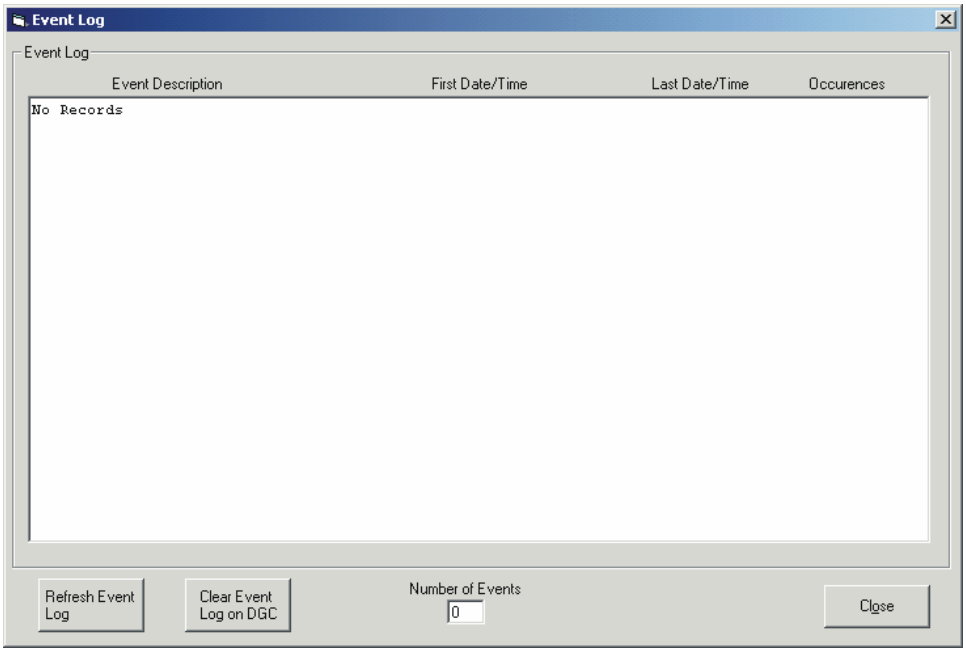

Figure 6-36. Event Log Screen

Any of the conditions in the following list will trigger an event log. Alarms and pre-alarms will not trigger an event log unless enabled through the Alarm Settings and Pre-Alarm Settings screens in BESTCOMS.

- Active DTCs pre-alarm
- ATS closed
- Auxiliary input contact 1 closed
- Auxiliary input contact 2 closed
- Auxiliary input contact 3 closed
- Auxiliary input contact 4 closed
- Battery charger failure pre-alarm
- Battery overvoltage pre-alarm
- BESTCOMS Load 1 button closed
- BESTCOMS Load 2 button closed
- BESTCOMS Load 3 button closed
- BESTCOMS Load 4 button closed
- CAN Bus failure alarm
- CAN Bus failure pre-alarm
- Coolant level sender failure
- Coolant temperature sender failure alarm
- KDGC-2001 protective shutdown
- Emergency stop alarm
- Engine start
- Fuel leak/sender failure pre-alarm
- High coolant temperature alarm
- High coolant temperature pre-alarm
- kW overload pre-alarm
- Low battery voltage pre-alarm
- Low coolant level alarm
- Low coolant level alarm
- Low coolant level pre-alarm
- Low coolant temperature pre-alarm
- Low fuel level alarm
- Low fuel pre-alarm
- Low oil pressure alarm
- Low oil pressure pre-alarm
- MPU speed sensor sender failure alarm
- Normal shutdown
- Oil pressure sender failure alarm
- Overcrank alarm
- Overspeed alarm
- Scheduled maintenance pre-alarm
- Unknown shutdown (caused by engine ECU)
- Voltage sender failure alarm
- Weak battery voltage pre-alarm

The event log screen lists the 20 most recent events recorded by the KDGC-2001. When 20 events are logged, subsequent events overwrite the oldest events in the list. Each event listed has a description, the number of occurrences for the event, and a date/time stamp for the first and last occurrences of the event.

CHANGING THE COMMUNICATION PARAMETERS

When communication is established between a PC and KDGC-2001, changes in BESTCOMS to the communication parameters affect both the PC and KDGC-2001. When communication between a PC and KDGC-2001 is closed, changes in BESTCOMS to the communication parameters affect only the PC.

Communication parameters are viewed and adjusted through the Communications Configure dialog box. This dialog box is accessed by clicking **Configure** on the menu bar and clicking **RS232**. The Communications Configure dialog box settings are illustrated in Figure 6-37 and described in the following paragraphs.

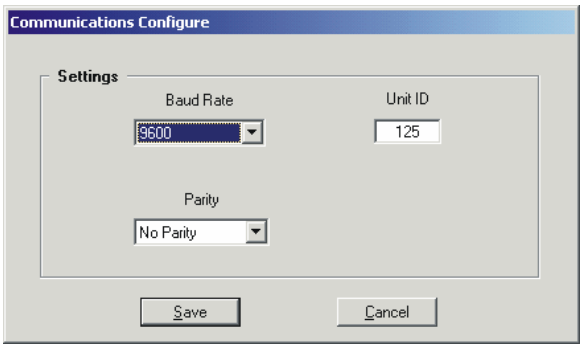

Figure 6-37. Communications Configure Dialog Box

Baud Rate. This setting selects the communication rate. A baud rate of 1200, 2400, or 9600 may be selected.

Parity. This setting enables and disables summation checking of data transmitted between the PC and KDGC-2001. A setting of No Parity, Odd Parity, or Even Parity can be selected.

Unit ID. This setting allows an identification number to be assigned to a KDGC-2001 for polled communication. A number between 1 and 247 may be selected.

PASSWORD PROTECTION

Password protection guards against unauthorized changing of KDGC-2001 settings. KDGC-2001 passwords are case sensitive. Three levels of password protection are available. Each level is described in the following paragraphs.

- *Limited Access.* This password level allows all KDGC-2001 settings to be read, but prevents any changes to settings. The default, limited-access password is *DGC*.
- *Full Access.* This password level allows all KDGC-2001 settings to be read and allows all settings except Accumulated Engine Runtime and Total KW Hours to be changed. The default, full-access password is *DGC1000*.
- *OEM Access.* This password allows all KDGC-2001 settings to be read and allows all settings to be changed. It also allows the KDGC-2001 embedded firmware to be upgraded. The default, OEM-access password is *OEMLVL*.

Changing Passwords

Passwords can be changed only after communication between the PC and KDGC-2001 is established. Changes to passwords are made through the Change Password dialog box. To access the Change Password dialog box, click **Communications** on the menu bar and click **Change Password**.

The content of the Change Password dialog box depends on the password level used when accessing the dialog box. For example, someone logged in with a full-access password will be able to change only the limited-access and full-access passwords—not the OEM-access password. Figure 6-38 illustrates the Change Password dialog box with all three access levels shown.

A password is changed by selecting the access level, entering the new password, and then re-entering the new password to confirm the entry.



Figure 6-38. Change Password Dialog Box

Katolight Service - Master Repair Manual - Page 2165

Once a password is changed, it should be stored in a secure location. If a user-defined password is lost or forgotten, contact Katolight for instructions on regaining password access.

Third Party Access Level

This setting determines the level of access that third party Modbus programs are allowed to have without going through the logon process. There are three levels of third party access: None (no access), Read Only, and Read/Write. The default level is None. The Third Party Access Level setting is accessible through the Change Password dialog box only when OEM-level access is obtained.

SETTINGS FILES

BESTCOMS software enables you to print a list of KDGC-2001 settings, save KDGC-2001 settings to a file, and open a settings file and upload those settings to a KDGC-2001.

Printing Settings Files

A printout of KDGC-2001 settings can be useful for record keeping or comparison purposes. Click the **Print Settings File** button or click **File** on the menu bar and click **Print** to access the Print KDGC-2001 Settings screen. This screen contains a print preview pane and settings for selecting the printer, content of the printout, and the printout orientation. KDGC-2001 settings are divided into five print sections: General, Auxiliary I/O, Modem, Input Sender, and ECU Timers. Any combination of sections can be selected for printing.

New Settings File

Clicking this button resets the settings displayed in BESTCOMS to the factory default values. The settings displayed in BESTCOMS can also be reset by clicking **File** on the menu bar and clicking **New**. If changes to settings have not been saved, you will be given the opportunity to save the changes in a KDGC-2001 settings file.

Saving Settings Files

Saving KDGC-2001 settings in a file for uploading to other KDGC-2001 units saves setup time when configuring multiple units with the same settings. A settings file can also be created in BESTCOMS without being connected to a KDGC-2001. The settings of the desired screens can be changed and these settings can then be saved in a file.

A settings file is created by clicking the **Save Settings File** button or clicking **File** on the menu bar and clicking **Save**. A file properties box appears and allows you to enter genset information and other pertinent notes about the settings. Next, a Save As dialog box prompts you to select the name and location of the settings file. All KDGC-2001 settings files are automatically given a DG1 file extension by BESTCOMS.

Opening Settings Files

To open a KDGC-2001 settings file, click the **Open Settings File** button or click **File** on the menu bar and click **Open**. An Open dialog box will appear and enable you to select a KDGC-2001 settings file (DG1 extension) for retrieval into BESTCOMS.

TERMINATING COMMUNICATION

KDGC-2001 communication is terminated by clicking **Communications** on the menu bar and clicking **Close**. If unsaved settings changes were made, you are prompted to save the changes in a new or existing settings file. When you execute the close communication command, with or without saving settings, communication with the KDGC-2001 is terminated. If you choose to exit BESTCOMS (by clicking **File** on the menu bar and then **Exit**) without first closing communication, you are still given the opportunity to save any settings changes.

EMBEDDED FIRMWARE

Embedded firmware is the operating program that controls the actions of the KDGC-2001. The KDGC-2001 stores firmware in nonvolatile flash memory that can be reprogrammed through the RS-232 communication port. It is not necessary to replace EPROM chips when updating the firmware with a newer version.

Updating Firmware

Future enhancements to KDGC-2001 functionality may make a firmware update desirable. Because default settings are loaded when KDGC-2001 firmware is updated, your settings should be saved in a file prior to upgrading firmware. KDGC-2001 firmware can be updated by performing the following steps.

CAUTION

If power is lost or communication is interrupted during file transfer, the KDGC-2001 will cease operating and will not recover.

1. Connect a communication cable between the RS-232 connector of the KDGC-2001 and the appropriate communication port of your PC. Start BESTCOMS-KDGC-2001, open communication, and gain password access with the OEM-access password.
2. Place the KDGC-2001 in Off mode. This can be accomplished by double-clicking the **Off** indicator on any of the BESTCOMS screens or by pressing the **Off** button on the KDGC-2001 front panel.
3. Click **Configure** on the menu bar and click **Upgrade Embedded Firmware**. The Embedded Firmware Upgrade screen of Figure 6-39 will appear.

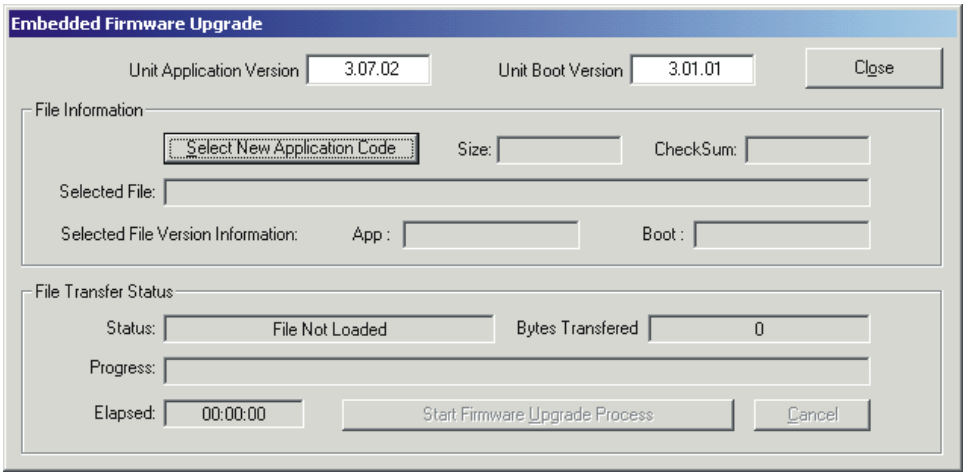

Figure 6-39. Embedded Firmware Upgrade Screen

4. Click the **Select new Application Code** button and then select the file (S19 file extension) to be used for updating the KDGC-2001 firmware.
5. Click the **Start Firmware Upgrade Process** button to start the file transfer.
6. Once the file transfer is complete, close the Embedded Firmware Upgrade dialog box, open communication between the PC and KDGC-2001, and gain password access to the KDGC-2001 with the appropriate password.

PRODUCT REVISION HISTORY

KDGC-2001 Digital Genset Controllers with part number 9 3589 XX XXX incorporate an SAE CAN/J1939 interface to support electronically controlled engine applications and replace earlier versions of the KDGC-2001 with part number 9 3275 XX XXX.

The following information provides a historical summary of the changes made to the embedded software (firmware), PC software (BESTCOMS), and hardware of the KDGC-2001. The corresponding revisions made to this instruction manual (9 3589 00 990) are also summarized. Revisions are listed in chronological order.

Firmware Version	Change
3.04.XX, 06/02	• Initial release
3.05.XX, 09/02	• Increased ECU settling time • Embedded the firmware part number for display on HMI LCD and in BESTCOMS • Maximum value for low fuel alarm threshold was increased to 100%
3.06,XX, 03/03	• Not released for production
3.07.XX, 09/03	• Added capability of Stop/Start control for Volvo Penta EDC
3.08.XX	• Not released to production
3.09, 04/04	• Added access level setting for third-party Modbus programs • Added Event Log capability • Added Volvo Speed Select and Accelerator Position settings

BESTCOMS Version	Change
2.01.00, 06/02	• Initial release
2.02.XX, 09/02	• Added display of the firmware part number • Corrected power factor polarity display error
2.03.XX	• Not released
2.04.XX, 09/03	• Added support for Volvo Penta EDC
2.05.XX	• Not released to production
2.06, 04/04	• Added access level setting for third-party Modbus programs • Added communication port phone book • Added Event Log selection to menu bar • Added Volvo Speed Select and Accelerator Position settings

Hardware Version	Change
C, 06/02	• Initial release
D, 09/02	• Converted capacitors C52 and C64 to non-polarized part
E, 09/02	• Replaced Digital circuit board micro controller with new part programmed with firmware version 3.05.XX
F, 01/03	• Began using anti-static packing materials during shipment
G, 09/03	• Added Volvo engine Stop/Start control via J1939 interface
H, 02/04	• Minor firmware enhancements
J, 04/04	• Implemented firmware version 3.09

Manual Revision	Change
—, 01/02	• Initial release
A, 06/02	• Added new BESTCOMS screen images • Added ECU and state machines documentation to Section 3 • Created Appendix A, *KDGC-2001 Settings Record*
B, 08/03	• Added material pertaining to KDGC-2001 communication with Volvo Penta EDCs • Added rear-panel HMI information and diagram showing the location of the CAN connector to Section 2 • Added information regarding DGC Isolator Kits to Section 4 • Added a table listing CAN terminations and a diagram showing the CAN cable assembly to Section 4 • Replaced the System Settings screen, shown in Section 6, with revised screen containing additional settings • Inserted additional settings of BESTCOMS System Settings screen to the settings record of Appendix A
C, 04/04	*Section 3* • Added single-phase formulas for total kVA, kW to Section 3 • Added oil filter differential pressure, fuel filter differential pressure, and crankcase pressure parameters to Table 3-1 *Section 4* • Added torque specification for mounting hardware to Section 4 • Changed all *Volvo Penta EDC* references in text and illustrations to *Volvo Penta EDC III*. *Section 6* • Incorporated changes to Phone Book and Comm Port screens • Added description of Event Log screen, Metering screen's ECU Data tab, Engine Configuration screen, third party access level, and CAN Bus Speed Select and Accelerator Position settings

Katolight Service - Master Repair Manual - Page 2169



100 Power Drive
Mankato, MN 56001 USA
http://www.katolight.com
PHONE 1-507-625-7973 /FAX 1-507-625-2968



100 Power Drive
PO Box 3229
Mankato, MN 56002-3229

TECHNICAL MANUAL

KGM 250

REV. 5

2/02/01

GM250 GenMaster™ GENERATOR CONTROL MANUAL

GENERAL DESCRIPTION

The **GM250** Generator Control System is a micro processor based, digital read out control system consisting of:

ENGINE CONTROL BOARD

The Engine Control Board houses the Engine Control Relays, Engine Interconnect Terminals, Speed Sensing, Power Supply, and Signal Conditioning. The GM250 is available for either Magnetic Pickup, or Generator Windings speed sensing. The Engine Control Relays are rated at 10 Amps. The Pre-Alarm and Fault relays are rated at 10 Amps. The plug harness connection is rated at 9 amps.

AC MONITORING BOARD

The AC Monitoring Board senses the AC Voltage and AC Current through its respective plugs. The AC Monitoring Board is internally connected to the Engine Control Board.

The **GM250** Control System is available for diesel, natural gas, LP, and gasoline engines with either 12 or 24 VDC battery. The engine vitals: Oil Pressure, Running Time, Engine Temperature, Battery Voltage, and Safeties are monitored on the large two line Super Twist, extended temperature, Back-Lighted LCD display. Automotive type senders are provided with the control system. Generator AC Voltage, AC Amperage, and Frequency are also displayed on the LCD display. Current transformers are provided with the Generator Control System.

Oil Pressure, Engine Temperature, and Battery Voltage are displayed continuously. The AC Volts and AC Amps are scrolled between each phase along with frequency. The Running Time and custom message screens are displayed upon request.

The **GM250** is housed in a rugged, vibration isolated enclosure with Oil Pressure Sender, Engine Temperature Sender, Current Transformers, and mating plug included for ease of maintenance.

The **GM250** has customer defined digital inputs. Each input can be programmed as a Pre-Alarm or Fault. There are 4 digital inputs plus Emergency Stop.

INSTALLATION INSTRUCTIONS

NOTE: BEFORE INSTALLATION MAKE CERTAIN THAT THE ENGINE BATTERY IS DISCONNECTED AND THAT THE ENGINE SELECTOR TOGGLE IS IN THE OFF POSITION

TOOLS REQUIRED

Drills, punch, 16 AWG wire, wire fittings, cutters, crimpers, screw driver, and nut drivers.

1. Check Packing List and Bill of Materials to make certain that the CT size and Speed Signals are what is planned for your installation.
2. Using template mark and drill holes for vibration isolators, and wire bushing.
3. Install Oil Pressure Sender in engine block.
4. Install Engine Temperature Sender in engine block.
5. Install Magnetic Pickup in fly wheel housing if used.
6. Install Current Transformers observing the polarity of the CT's and the physical relationship.
7. Connect plug pins to wires, per schematic, inserting into the connection plug, and terminate wires to the Engine Fuel System, Cranking Motor Slave Relay, Senders, AC Voltage connections, AC Amperage connections, Magnetic Pickup or Generator Winds for speed signal.
8. After checking that the Engine Selector is in the **OFF** position, connect the Battery Positive (+) and Negative (-) per schematic.

NOTE:

THE GenMaster CONTROL SYSTEM IS DESIGNED TO OPERATE ON A GROUNDED "Y" CONNECTED GENERATOR.

ENGINE SEQUENCE OF OPERATION

A. With the Selector Toggle in OFF the LCD display will pulse NOT IN AUTO.

B. An amber Pre-alarm LED will turn on.

C. The Pre-alarm relay will close.

D. Engine Temperature, Battery Voltage, Oil Pressure and % Fuel Level (if used) will be displayed.

SELECTOR SWITCH IN RUN POSITION

Placing the Selector Switch in the RUN mode will initiate the start sequence:

A. The engine Start Contact will close battery positive (+), to the Cranking Motor Slave Relay. There should be a ***suppression DIODE connected across the Slave Relay. (See technical notes.)***

B. The Engine Fuel Contact will close battery positive (+) to the Fuel system. There should be a ***suppression DIODE connected across the fuel system coil. (See technical notes.)***

C. The LCD display will read STARTING ENGINE during cranking .

D. When Crank Termination is reached (450 RPM) the Start Contact will open, disengage the Cranking Motor Slave Relay and lock out the starting circuit until the system is Reset. There are 5 cranking cycles of 10 seconds on and 10 seconds rest between cranks (default). If the engine does not start after the fifth crank, the Crank Contact and the Fuel Contact will be opened and locked out. The LCD display will read FAULT OVER CRANK. Manual reset by placing the toggle switch in the OFF position is required before another cranking cycle can be initiated.

E. Upon Crank Termination the GM250 checks for false crank termination. The START CHECK™ feature monitors the engine speed immediately after crank termination. If the engine speed goes below crank termination speed, during the first 5 seconds of run, the Fuel Contact is opened, and engine speed is monitored while the engine coasts to rest, preventing the cranking motor from energizing if the engine is not at ZERO SPEED, a RESTART SEQUENCE is initiated, after the engine speed equals zero.

F. After START CHECK™ the GM250 enters an Oil Pressure bypass time delay, followed by display engine and generator information.

G. The Oil Pressure, Water Temperature, Frequency and Battery Voltage are displayed while the AC volts and amperage values are scrolled. Should a monitor Pre-alarm condition occur the Pre-alarmed value will flash on the display, an amber LED will turn on, and the Pre-alarm relay will closes.

H. Should a Fault such as Low Oil Pressure, High Engine Temperature, Overspeed, or Overcrank occur, the Fuel Contact will be opened and locked out. The LCD display will display the Fault Condition, the red LED will turn on, and the Fault Relay will close. Manual Reset is required before a Restart can be initiated.

I. Placing the spring loaded toggle in the RT position will display the accumulated RUNNING TIME.

J. Continuing to hold the RT toggle will scroll the shut down set points and custom message units on the LCD display.

SELECTOR IN THE AUTO POSITION

Placing the selector in the Auto position, the LCD display will read the following:

A. GenMaster UNIT IN AUTO with Temperature and Battery Voltage displayed.

B. Closing ground to the Remote Start Terminal will start the RUN SEQUENCE as described above. Removing the Remote Start signal will stop the Generator placing the GM250 back into the Automatic mode awaiting another Remote Start signal.

C. If any faults occur in Auto, a manual reset is required before a restart can be initiated.

FAULT TEST PROCEDURE

OVERCRANK

Disconnect the Fuel system, Place toggle switch in RUN position. The engine will crank 5 times with 10 seconds cranking efforts with 10 seconds rest. The crank Relay and Fuel Relay will lock out, the Fault Relay will close, the red LED will turn on, and the LCD display will read FAULT OVERCRANK. Manual reset is required before restart can be initiated. (It is recommended that the cranking motor also be disconnected while doing the test to preserve cranking battery charge).

OVERSPEED

Place the Engine selector in the RUN position allowing the engine to run. Manually increase the fuel until OVERSPEED speed is achieved. The Fuel Contact will open and lock out, the Fault Relay will close, the red LED will turn on, and the LCD will display FAULT OVERSPEED. Manual reset is required before another start can be initiated.

HIGH ENGINE TEMPERATURE

Place the Engine Selector in the RUN position allowing the engine to run. Manually ground the Engine Temperature Sender to the engine block. The Fuel Contact will open and lock out, the Fault Relay will close, the red LED will turn on, and the LCD will display FAULT HIGH ENGINE TEMPERATURE. Manual reset is required before a restart can be initiated. There is a 5 second delay on this fault.

LOW OIL PRESSURE

Place the Engine Selector in the RUN position allowing the engine to run. Manually remove the Oil Pressure Sender wire. The Fuel Contact will lock out, the Fault Relay will close, the red LED will turn on, and the LCD will display FAULT LOW OIL PRESSURE. Manual reset is required before a restart can be initiated. There is a 5 second delay on this fault.

DIGITAL INPUTS

A contact closure to ground will activate individual inputs. The inputs will be as follows depending upon customer definition:

A. Pre-Alarm at all times or when running only.

B. Pre-Alarm when selector is in OFF or AUTO, Fault when engine is running.

C. Fault when engine is running only.

EMERGENCY STOP

A contact closure to ground will activate Emergency Stop. The fuel will be turned off, the fault relay will close, the red LED will turn on, and the display will read EMERGENCY STOP. Manual reset is required before a restart can be initiated.

CALIBRATION PROCEDURES

AC VOLTAGE

Should AC Volts require adjustment. There is a single pot adjustment located on the AC Monitor board.

AC AMPS

Should AC Amps require adjustment. There is a single pot adjustment located on the AC Monitor board.

DC VOLTAGE

Should DC Volts require adjustment. There is a single pot adjustment located on the Engine Monitor board.

To test for specific values for both Pre-Alarms and Faults. A Temperature and Pressure test kit is available at additional cost from the factory.

SPEED SET PROGRAM (optional) Push button through face plate

A small push button has been installed at the top of the engine board. The push button is located directly behind the ¼" hole in the face plate.

Start and allow the engine to come up to 1800 RPM, measured with a frequency meter or hand held tachometer.

When the engine is at 1800 RPM – Place the Running Time/Scroll Lock toggle switch in the **Scroll Lock** position and **at the same time** using the wooden dowel **depress** the push button. Place the Scroll Lock switch in the center position. The speed should be set to 60.0 Hz or 1800 RPM on power units. Double check the LCD readings with your manual reading. If they agree place the ¼" plug in the hole in the face plate.

If the reading is not correct repeat the procedure.

NOTE: 1

THE CONTROL YOU HAVE PURCHASED IS A HIGH QUALITY ELECTRONIC INSTRUMENT, THE HEART OF WHICH IS DESIGNED TO RUN ON 5 VOLTS DC.

THE MOST COMMON INSTALLATION PROBLEMS THAT OUR CUSTOMERS HAVE RELATED TO EITHER LACK OF OR A POOR GROUND AND ELECTRONIC NOISE FROM SPARK IGNITED ENGINES. WHEN ANY ELECTRONIC CONTROLS ARE USED THE MOST IMPORTANT CONNECTION IS THE GROUND. THE BEST GROUND IS DIRECTLY TO THE NEGATIVE BATTERY POST.

IT IS ALSO IMPORTANT TO CONNECT THE POSITIVE CONNECTION AS CLOSE TO THE POSITIVE BATTERY POST AS POSSIBLE TO AVOID VOLTAGE DROPS AND PROVIDE THE BEST POWER TO THE CONTROLS AS POSSIBLE.

IF YOU HAVE EXPERIENCED ANY PROBLEM WITH THE INSTALLATION FEEL FREE TO CALL OUR ENGINEERING STAFF, AT (330) 239-4345, BUT FIRST CHECK THE FOLLOWING:

1. Make sure that the neutral is bonded to ground when you load bank the unit. Failure to do this may result in erroneous read outs to the control. When the generator is shipped into the field your customer may ground the neutral differently than you did, as long as they follow the NEC there will not be a problem.

2. If the control faults out at crank termination (when the engine starts) the suppression diode may not be installed on the cranking motor relay. If the diode is not installed on the cranking motor solenoid and the fuel relay large negative voltage spikes approaching 300 volts may be generated. These voltage spikes can cause either a glitch or damage to electronic controls, including electronic governors.

3. On spark ignited engines ignition noise is especially high. Make certain that none of the wires to the electronic control are touching the spark plug wires. Air is the best insulator. The high voltage noise from spark ignited engines can cause the microprocessor to crash. With proper installation the noise problem can be eliminated.

4. Our control system requires 2 battery positive connections. This is done to prevent voltage drop to the microprocessor during cranking. Remember that the battery positive connection should be as close to the battery post as possible. If one battery connection is used to feed both battery positives on the control engine board make certain that the conductor is large enough to prevent voltage drop caused by current draw and inrush.

5. Our control system requires that the neutral be grounded on WYE connected generators. If the neutral is not grounded it will float causing recirculating current on the neutral. Since the control system is grounded the current on the neutral will seek a ground through our control. We have installed a fuse on the neutral wire in our harness to help prevent damage caused by not grounding the neutral. Damage caused by not grounding the neutral will not be covered under warranty. We also have a special DELTA kit for delta connected generators.

6. Please review all of the manuals, technical notes, and schematics. If you have done so and still are experiencing problems please check our web site for additional technical information www.controlsinc.com or call us at 330-239-4345 for assistance.

We at Controls Inc. strive to manufacture leading edge technology based control systems. Our controls systems are manufactured and tested under the strictest quality control procedures available to us. Our products are designed specifically for the industrial environment that engines and generators are used for. When properly applied and installed Controls Inc. products will provide years of reliable service.

TECHNICAL BULLETIN #3

OIL PRESSURE SENDERS

The typical automotive oil pressure sender utilizes the engine block as a ground reference. The pressure change is measured through a small restricting orifice to a diaphragm which moves a wiper across a resistor. The resistor may be Thick Film, Ceramic or Wire Wound. The typical resistance change, using a Stewart Warner curve for 0 – 100 lb., is 230-240 ohms equal 0 pounds and 29-33 ohms equal 100 pounds pressure.

Oil pressure readings may vary slightly from sender to sender. Pressure readings from gauge to gauge will also vary slightly depending upon the specific gauge. Pressure readings will also vary if the readings are taken from difference ports on the engine. As the wiper moves across the resistor, the reading may vary depending on the arm sweep and which segment of the resistor the arm is resting on.

Some engines may have enough vibration to cause a sender to fail prematurely. The wiper may wear a specific portion of the resistor, or cause the wiper to bounce on the resistor. If this occurs the pressure will read lower than actual. if a total failure occurs, it will be to 0 pounds pressure. In some application a rubber or nylon hose may be required to dissipate the vibration. In some prime power applications the oil pressure sender may fail due to dirt buildup caused by constant speed or the engine not allowing the wiper to clean itself across the resistor by starting and stopping.

If the engine has a harmonic vibration that caused the oil pressure sender to fail frequently or precise oil pressure measurement is desired. A Strain Gauge can be considered for these specific applications. The Strain Gauge is relatively expensive, but the accuracy and long life is these application are well worth the expense. Strain Gauges are available from Controls Inc.

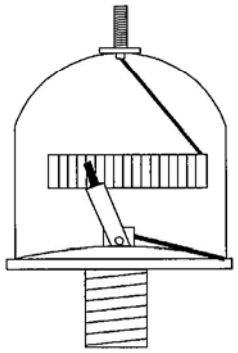

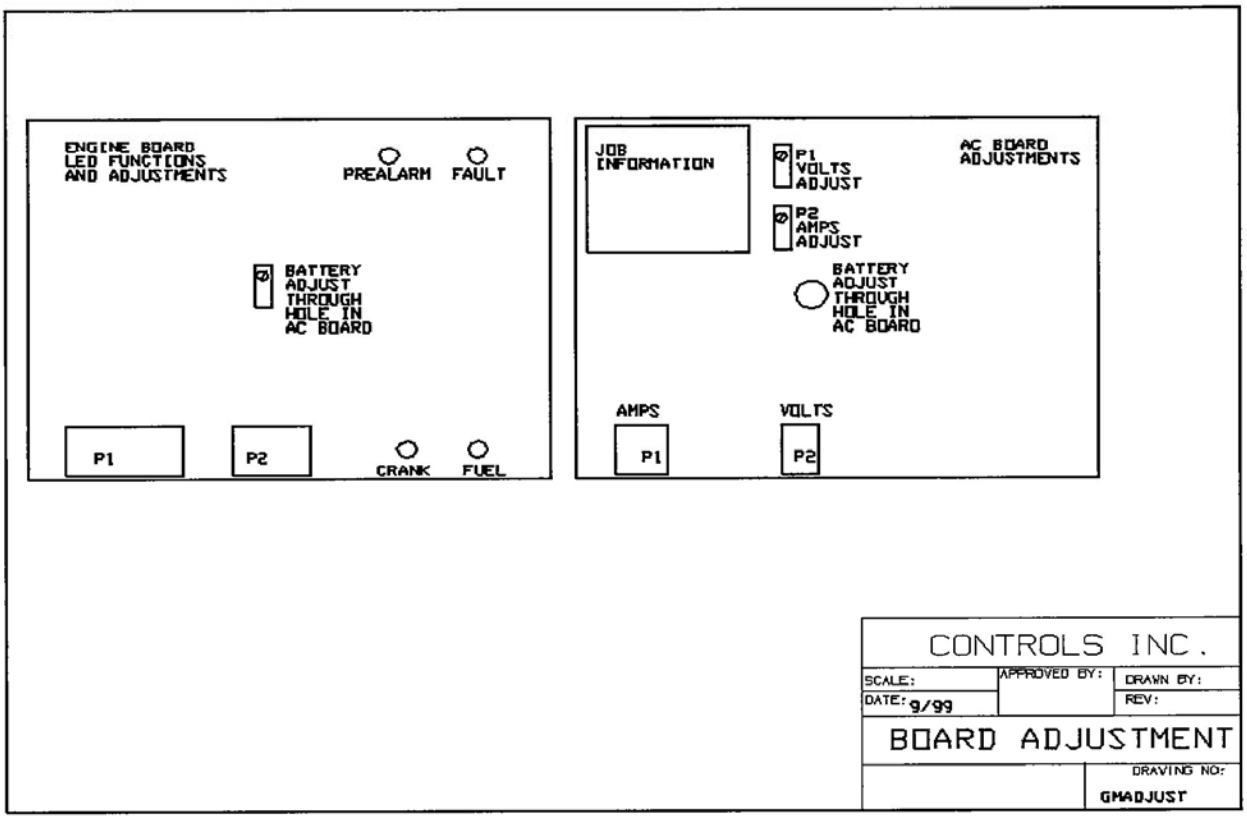

DIODE INSTALLATION

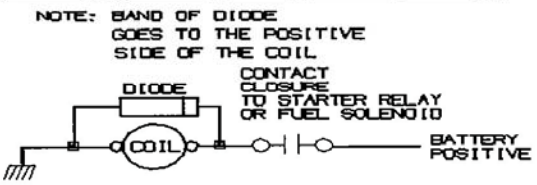

WHEN THE SWITCH IS OPENED THE DIODE CLAMPS THE REVERSE NEGATIVE VOLTAGE SPIKE GENERATED WHEN THE COIL FIELD COLLAPSES. THIS PREVENTS GLITCHES TO THE MICROPROCESSOR

ENGINE STARTING SYSTEM

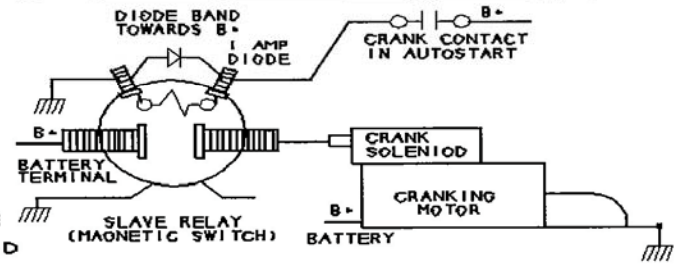

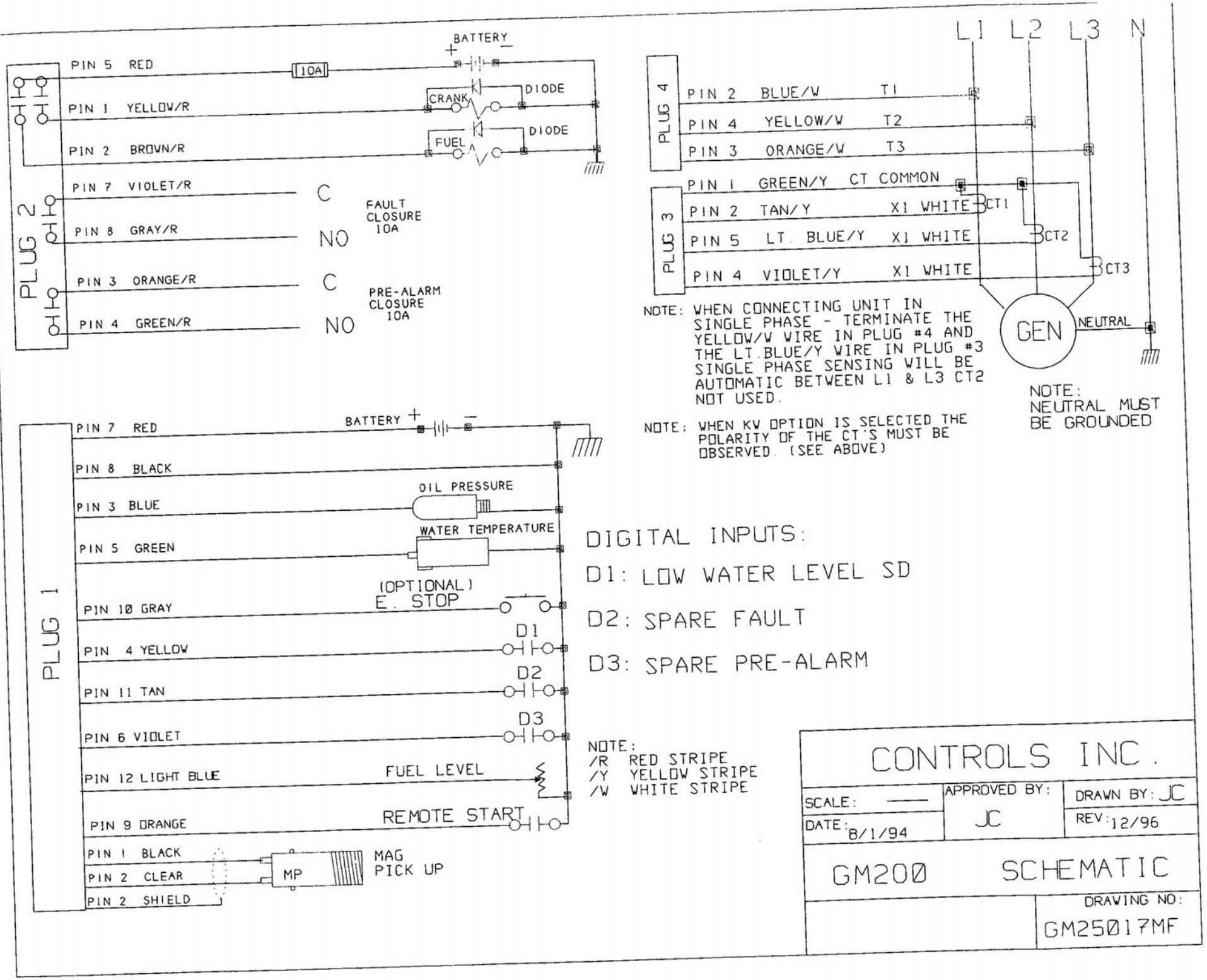

Katolight Service - Master Repair Manual - Page 2180

LIMITED WARRANTY

CONTROLS, INC. is herein called "Seller". The person, firm or corporation to whom or which the sale is made is herein called "Buyer".

Seller warrants to the Buyer that all products furnished under this order will conform to Seller's specification, drawings as described in its current catalog or quotation and will be free from defects in materials and workmanship. Other special requirements asked for by the Buyer in its purchase order must be approved in writing by Seller. Parts replaced or repaired in the warranty period shall carry the unexpired portion of the original warranty. The foregoing is subject to the provisions that in no case will the total warranty period extend beyond twelve (12) months from date seller ships equipment from point of sale.

The Liability of Seller thereunder is limited to replacing or repairing at Seller's factory or on job site at Seller's option, any part or parts which have been returned to the Seller and which are proved by buyer as defective or not conforming to Seller's specifications, drawings or other written descriptions, accepted by Seller, provided that such part or parts are returned by the buyer within thirty (30) days after such defect is discovered. The Seller shall have the sole right to determine if the parts are to be repaired at the job site or whether they are to be returned to the factory for repair or replacement. All items returned to Seller for repair or replacement must be sent freight prepaid to its factory. Buyer must obtain Seller's Return Goods Authorization prior to returning items. The above conditions must be met if warranty is valid. Seller will not be liable for any damage done by unauthorized repair work, unauthorized misapplication in non suitable environment.

In no event shall the Seller be liable for loss, damage, or expense directly or indirectly arising from the use of the units, or from any other cause, except as expressly stated in the warranty. Seller makes no warranties, express or implied, including any warranty as to merchantability of fitness for a particular purpose or use. Seller is not liable for and buyer waives any right or action it has or may have against seller for any consequential or special damages arising out of any breach of warranty, and for any damages buyer may claim for damage to any property or injury or death to any person arising out of its purchase or the use, operation or maintenance of the product. Seller will not be liable for any labor subcontracted or performed by buyer for preparation of warranted item for return to Seller's factory or for preparation work for field repair or replacement. Invoicing of Seller for labor either performed or subcontracted by buyer will not be considered as a liability by the Seller.

This warranty shall be exclusive of any and all other warranties express or implied and may be modified only by a writing signed by an officer of the Seller. With respect to accessories supplied by Seller, but manufactured by others, there is no warranty of any kind, express or implied, and specifically there is no warranty of merchantability or fitness, except as may be set forth in any warranty the manufactures have made to Seller and which can be passed to the Buyer.

Buyer has not relied and shall not rely on any oral representation regarding the products sold thereunder and any oral representation shall not bind seller and shall not be part of warranty.

9/91

DIGITAL GENERATOR CONTROL SYSTEM

SPECIFICATION GenMaster™ GM250

The Generator Control System shall be a microprocessor based, digital read out control system powered from the engine cranking batteries and rated to operate from -30 deg C to +75 deg C. The boards shall have plug in capabilities for maintenance troubleshooting, field-testing and consist of the following:

ENGINE CONTROL BOARD
The Engine Control Board houses the Engine Control Relays, Engine Interconnect Receptacles, Speed Sensing, Power Supply, and Signal Conditioning. The control shall be operational utilizing either Magnetic Pickup, or Generator Windings speed sensing. The Engine Control Relays for fuel solenoid and cranking motor relay shall be rated at 10 Amps. Standard automotive senders are used for temperature and pressure readings and safety set point monitoring. Speed sensor and sender out of tolerance monitoring as pre-alarms are standard. Out of tolerance conditions are logged in EEPROM and displayed until corrective action is taken. There are 5 Amp dry relay closures for both Pre-alarm and Fault annunciation.

AC MONITORING BOARD
The AC Monitoring Board senses the AC Voltage, and AC Current through its respective plugs. The AC Monitoring Board is internally connected to the Engine Control Board, and shall accept full rated AC voltage.

The Control System shall be rated to operate on diesel, natural gas, LP, and gasoline engines with either 12 or 24 VDC batteries. The engine vitals, Oil Pressure, Water Temperature, Battery Voltage, Running Time, and Safety Set Points are monitored on the large two lines, extended temperature range, Super Twist, Back Lighted LCD display. The senders are provided with the control system. Generator AC Voltage, AC Amperage, and Frequency are also displayed on the LCD display.

The Oil Pressure, Water Temperature, Frequency, and Battery Voltage are displayed constantly, with AC Volts and AC Amps are scrolled, Phase 1-2, Phase 2-3, and Phase 3-1. The Running Time and Safety Set Points are displayed upon request.

The running time, safety set point and custom message units functions are be stored in non volatile memory that does not require battery backup.

The engine control system shall have amber led for pre-alarm indication and a red led for fault indication. Should a pre-alarm condition exist the amber led will illuminate, the pre-alarm relay will close, and the engine condition will flash on and off. Should a fault condition such as High Engine Temperature exist the fuel relay will open, the red led will illuminate, the fault relay will close, and the LCD display will read out the fault condition including the actual reading when the fault occurred. i.e. Fault High Temperature 226 Deg.

The engine control shall also have the ability to accept 4 digital inputs along with emergency Stop. All digital inputs must be ground signal in type, and can be programmed to act as a pre-alarm or fault.

The generator control system shall be capable of both remote and local start. Any fault condition will require manual reset

The Generator Control System shall be as manufactured by Controls Inc., Medina, Ohio. 10/96

KATOLIGHT CORPORATION

PRODUCT DATA SHEET

SPECIFICATIONS
GenMaster™ GM250

Supply Voltage	12 or 24 VDC
Operating Voltage	-15% - +30%
Power Consumption	100 mA
Operating Temperature	-30 deg C to +75 deg C
Relay Switching	10 Amps Fuel & Crank
LCD Display	2 lines - 16 characters with super twist with LED backlight
Transient Voltage Suppression	To UL497 1.5Kw @ 1ms

GenMaster™ DIGITAL GENERATOR CONTROL SYSTEM THE FOLLOWING ANALOG INPUTS AND READ OUTS SHALL BE INCLUDED

INPUTS	DESCRIPTION	RANGE	SET POINTS
3	Generator Voltage	0 - 600 VAC	
3	Generator Current	0 - 4000 AMPS	
1	Engine Battery Voltage	0 - 35 VDC	2
1	Engine Oil Pressure	0 - 100 PSI	2
1	Engine Temperature	0 - 250 DEG	3

THE FOLLOWING DIGITAL INPUTS AND READ OUTS SHALL BE INCLUDED

INPUTS	DESCRIPTION	RANGE	SET POINTS
1	Engine Speed Signal		
	Crank Termination	0 - 600 RPM	1
	Overspeed	1500 - 2100 RPM	1
	Overcrank	5 Cycle Cranks	
1	Generator Frequency	0 - 400 Hz	
1	Engine Control Auto/Off/Run - Remote Start		
1	Emergency Stop		Ground signal in 1
4	User defined spare		Ground signal in 1
	Pre-Alarm or Fault		

THE FOLLOWING 10 AMP RELAY CONTACTS SHALL BE INCLUDED

1 Fuel
1 Starter Slave

THE FOLLOWING 10 AMP RELAY CONTACTS SHALL BE INCLUDED

1 Dry Contact Closure on Fault
1 Dry Contact Closure on Pre-Alarm

THE FOLLOWING SPECIAL FUNCTION INCLUDED

Engine Running Time and Fault Set Points in non-volatile memory. Three 32-character customer defined message display screens. Data storage rated for 100 years without battery backup. Push button Speed Ser available

6/00

KATOLIGHT® CORPORATION

1/24/01

Control's Inc GenMaster controllers offer a flexible platform to meet your specifications. Standard Built In Features accommodate a variety of configurations, while the ease of programming allows optional features to be selected.

Standard "Built In" Features

Universal DC Voltage – Detects 12 or 24 VDC system and uses corresponding set points for High and Low Battery Pre Alarms.

Automatic AC – The GenMaster automatically detects Single or Three phase operation as well as AC Voltage for each operation of the Generator.

Speed Set – Using a push button through the faceplate, Frequency is set to 60 Hertz and / or RPM to 1800.

Speed Sender Failure – A condition when speed signal is lost. "Speed Sender Failure" is displayed on LCD as a Pre Alarm.

Secondary Crank Termination – In the event of a Speed Sender Failure, the GenMaster will crank terminate using AC Voltage.

Automatic Fuel Level – When a Fuel Sender is connected to the control, the LCD will display the % Fuel Level and corresponding Pre Alarm and Shut Down set points will be active. Without a fuel sender attached, the Fuel area of the LCD will be blank.

Emergency Stop – Contact closure to ground will stop engine and display "Emergency Stop" on the LCD.

Programmable Basics

Low Oil Pressure – Pre Alarm and Shut Down Set Points.

High Engine Temperature – Pre Alarm and Shut Down Set Points.

Low Engine Temperature – Pre Alarm Set Point.

Over Speed – Programmable to Tenths of a Hertz Shut Down.

Cranking Cycles – Number and Length of Cranks as well as Crank Rest time period.

Programmable Options

Digital Inputs – Up to Four Digital Inputs are available to be configured individually as Pre Alarms or Shut Downs. Message units, for each input are programmable. (ex "Low Coolant Level").

Over Current – Over Current has set points for Single and Three Phase operation. Two time delays allow Prime Power or Standby settings. Over Current is Pre Alarmed until time delays expire and Shut Down occurs.

Over / Under Voltage – Programmable in % Over and % Under. Condition is Pre Alarmed until time delay expires and Shutdown occurs.

Over / Under Frequency – Programmable to Tenths of a Hertz as a Pre Alarm

Under Speed - Programmable to Tenths of a Hertz with a time delay to Shut Down

Cool Down – Programmable Time before controller turns Generator Off

Time To Service – Number of hours in between Service Intervals. May be reset by Maintenance Personnel manually.

Glow Plug – Several options are available. An Air Intake Heater and Glow Plug timing based on Temperature is available as well as a Fixed Time Delay.

Sender Monitoring – An out of tolerance sender can be detected and cause either Pre Alarm or Shutdown of the unit.

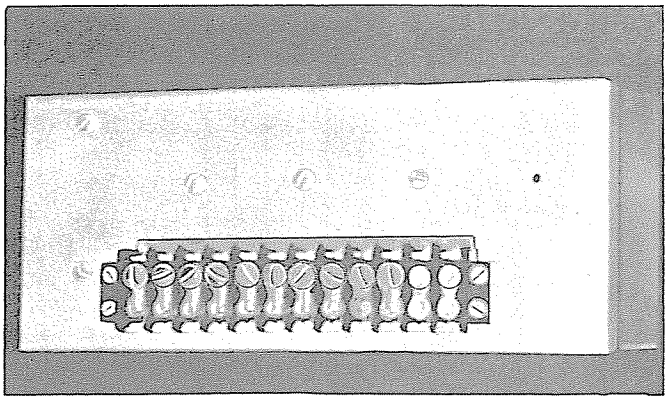

KATOLIGHT
MANKATO, MINN.
LIGHT & POWER PLANTS

AUTOMATIC START CONTROLS

MODEL KLAS 3-D3

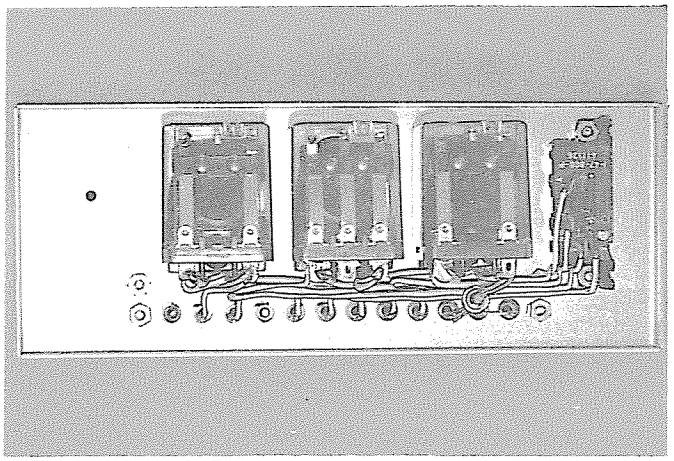

Componet selection is engineered to provide reliability and accuracy of operation consistent with the application. Time delay relay is of the thermal type to give consistent service. All models feature enclosed contacts for longer life and greater reliability.

Mode of operation is selected by a three or four position switch as specified. In "MANUAL" position the control is energized immediately; in "AUTOMATIC", operation commences only when a remote set of contacts close, such as those of an automatic transfer switch; center position is "OFF". The four position rotary switch gives an additional "TEST" positon in which the automatic control is out of the circuit and engine may be started manually.

Current during cranking period flows thru relay 1, normally closed contact, to energize relay 3. Relay 3 breaks magneto ground, if used, energizes ignition coil or throttle solenoid of diesel units and allows current to start solenoid and time relay 4 thru relay 2.

When engine starts, relay 2 pulls in, being activated from 115 volts AC generator. This breaks cranking circuit.

Should unit fail to start, relay 4 closes in about 45 seconds, locks in relay 3 to sound alarm and stops cranking period.

Reset control by turning to "OFF" position.

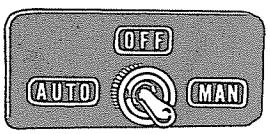

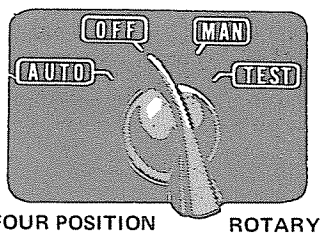

THREE POSITION SWITCH • FOUR POSITION ROTARY SWITCH

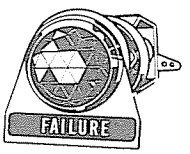

• FAILURE INDICATING LIGHT

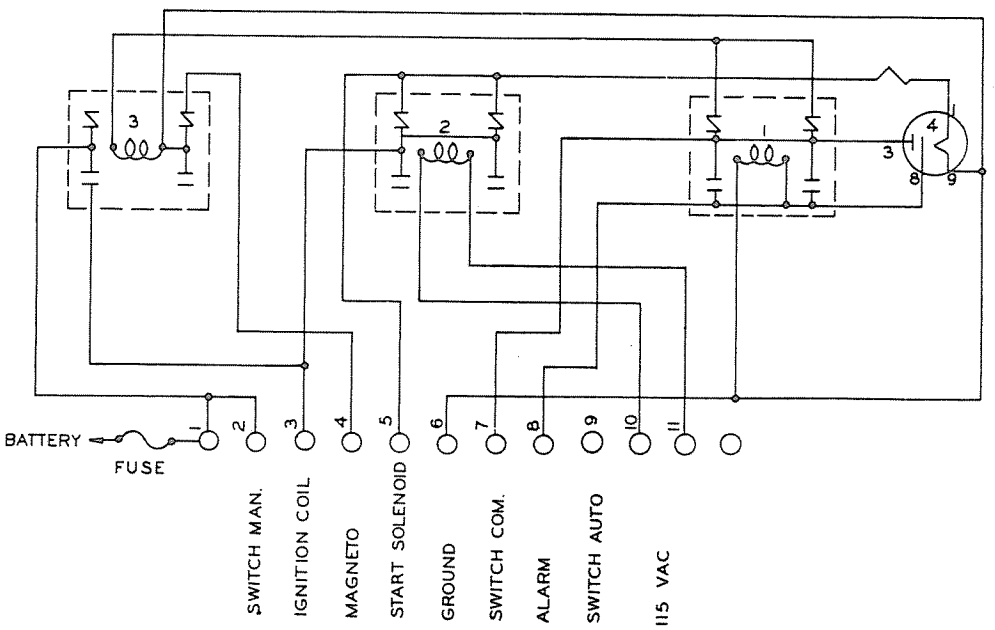

KATOLIGHT CORPORATION
3201 THIRD AVENUE – MANKATO, MINNESOTA 56001

Form ASC 3-469

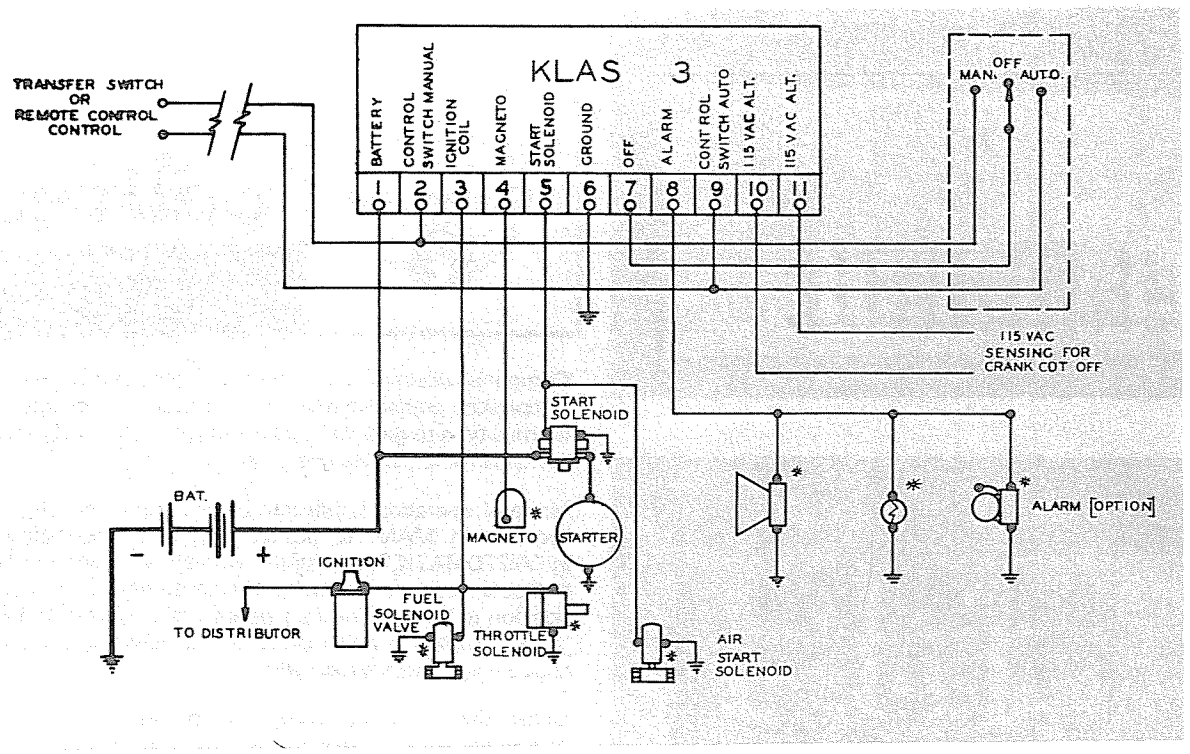

KATOLIGHT AUTOMATIC ENGINE CONTROL OPERATING INSTRUCTIONS - MODEL KLAS 3 & D3

This instruction bulletin covers normal installation, operating and test procedures. The Klas 3 & Klas D3 controls provide basic engine control features. Cranking interval of approximately 45 seconds is predetermined and may vary somewhat due to ambient temperature and battery voltage. After the crank interval and the engine has attempted to start and has not started, the control will remain off and alarm will be activated until reset. With normal engine start, the control senses generator voltage buildup and disconnects the cranking control and unit will continue running.

The Klas 3 or Klas D3 is designed for automatic operation in conjunction with an automatic transfer switch or load start switch. (It may be used on either standard battery ignition, magneto or diesel systems, dependent on accessories specified).

INSTALLATION: The Klas 3 or Klas D3 control horizontal chassis mounting is preferred. If severe vibration is present, shock insulators may be required to prevent the relays from cycling when not energized. Mounting in an enclosure or panel free of dust and fumes will afford maximum contact life and reduce spark hazard.

Wire terminations should be made with solderless connectors. Use No. 14 flexible wire for short runs, heavier wire for remote locations.

CAUTION: Circuitry of this control is limited to 5 amps. Starter solenoids, audio alarms, etc., requiring more than 5 amps must be controlled by additional heavy-duty relays or contactors operated by the control.

A 3-position switch, failure lights and decal are provided for control of the unit. Functions are "OFF, AUTOMATIC & MANUAL".

OPERATION: The "OFF" position should be used while servicing the engine, since cranking cannot occur. It is also used to shut down the engine for any reason and to reset the control after a failure.

In "MANUAL" position, the engine will start and operate normally with safety shutdown features in effect.

"AUTO" position places the control directly across a remote automatic transfer contactor or other device which then controls the engine.

If the optional four-position switch is used, the three-positions "manual", "off" and "automatic" are the same as the standard three-position switch functions with a test position added which will by-pass the engine control completely and allow the engine to run when started by means other than the engine control. Shut down by turning the four-position switch to the "off" position.

The failure light will indicate an overcrank (engine failed to start in the 45 second crank cycle.) It will remain on until unit is manually reset. An alarm horn (same voltage as control) may also be used in conjunction with failure light.

(Cranking time is approximately 45 seconds with normal ambient temperature and fully charged battery. A 5 watt resistor or potentiometer may be installed per diagram to increase or decrease cranking time. A 15 ohm resistor is supplied with the control. Less resistance will shorten the cycle. Should engine fail to start, the alarm light, if used, will go on and no further cranking will occur until manually reset. If engine starts normally, check starter solenoid to see that it disengages at about ¼ engine speed.

Should unit fail to crank:

Check:
1. Battery
2. Fuse
3. Dirt in engine control contacts
4. Voltage at starter solenoid
5. Starter and solenoid for malfunction

Unit will start, then fail:

Check:
1. Fuel and fuel supply filters
2. Ignition system - fuel or throttle solenoid
3. Carburetor adjustment or fuel injector pump - fuel solenoid valve
4. Engine control

Unit cranks but does not start:

Check:
1. Fuel and fuel supply lines for dirt or leaks
2. Ignition system, fuel or throttle solenoid
3. Carburetor adjustment, fuel injection pump, fuel solenoid valve
4. Voltage at ignition, throttle, fuel solenoid or fuel solenoid valve
5. Engine control - contacts may be dirty. Use contact cleaning tool, not abrasives.

Unit cranks continuously: (over 60 seconds)

Check:
1. Delay relay (tube) - May be defective
2. Low battery voltage at control (Low voltage will cause delay relay to be very slow acting).

Unit starts but starter does not disengage:

Check:
1. Generator for voltage buildup. If voltage builds up normally, fault may be in relay 2. It must energize as generator voltage builds up.

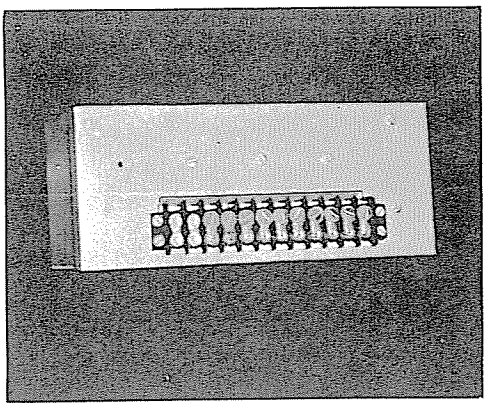

AUTOMATIC START CONTROLS

KLAS 10 - D10

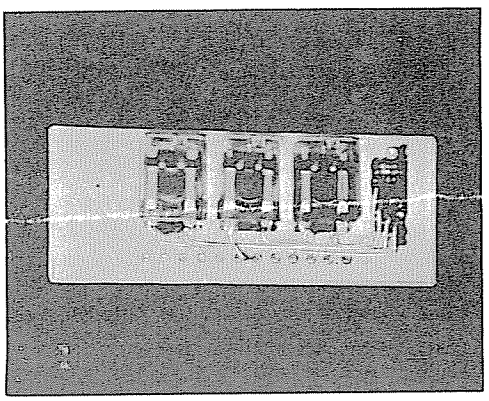

Component selection is engineered to provide reliability and accuracy of operation consistent with the application. Time delay relay is of the thermal type to give consistent service. All models feature enclosed contacts for longer life and greater reliability.

Mode of operation is selected by a three or four position switch as specified. In "MANUAL" position the control is energized immediately; in "AUTOMATIC", operation commences only when a remote set of contacts close, such as those of an automatic transfer switch; center position is "OFF". The four position rotary switch gives an additional "TEST" position in which the automatic control is out of the circuit and the engine may be started manually.

Current during cranking period flows thru relay 3, normally closed contact; to energize relay 1. Relay 1 breaks magneto ground, if used, energizes ignition coil or throttle solenoid of diesel units and allows current to start solenoid and time relay 4 thru relay 2.

If engine starts, relay 2 is energized from terminal 10 by voltage from battery charging generator or from battery thru (N.O.) speed switch and start solenoid is deenergized.

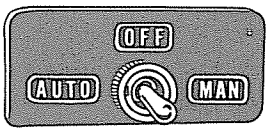

3 POSITION SWITCH

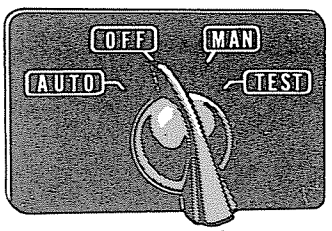

4 POSITION ROTARY SWITCH



FAILURE INDICATING LIGHT

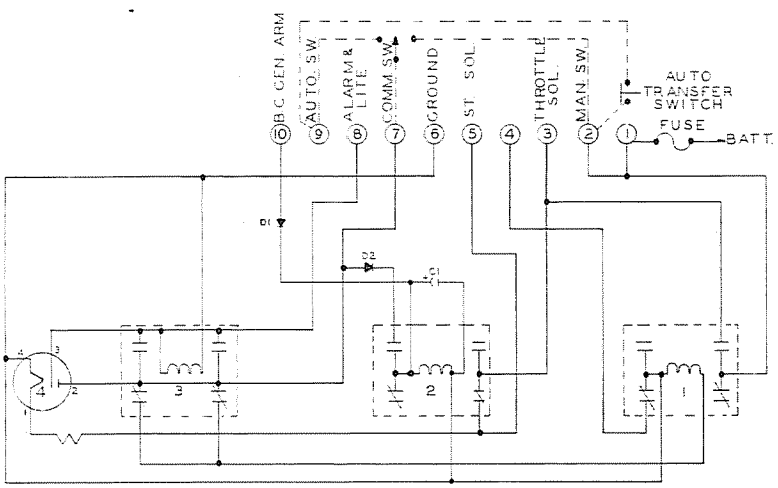

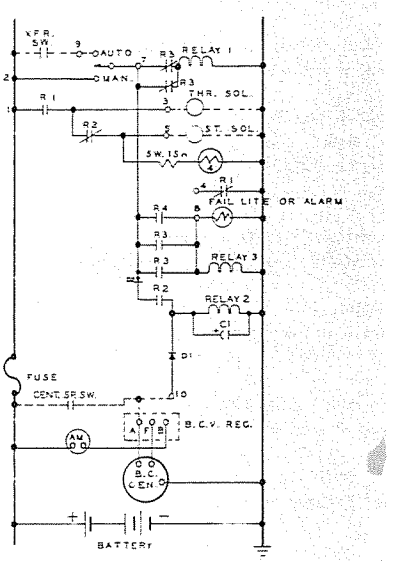

KATOLIGHT CORPORATION

MANKATO, MINNESOTA 56001

Katolight Service - Master Repair Manual - Page 2189

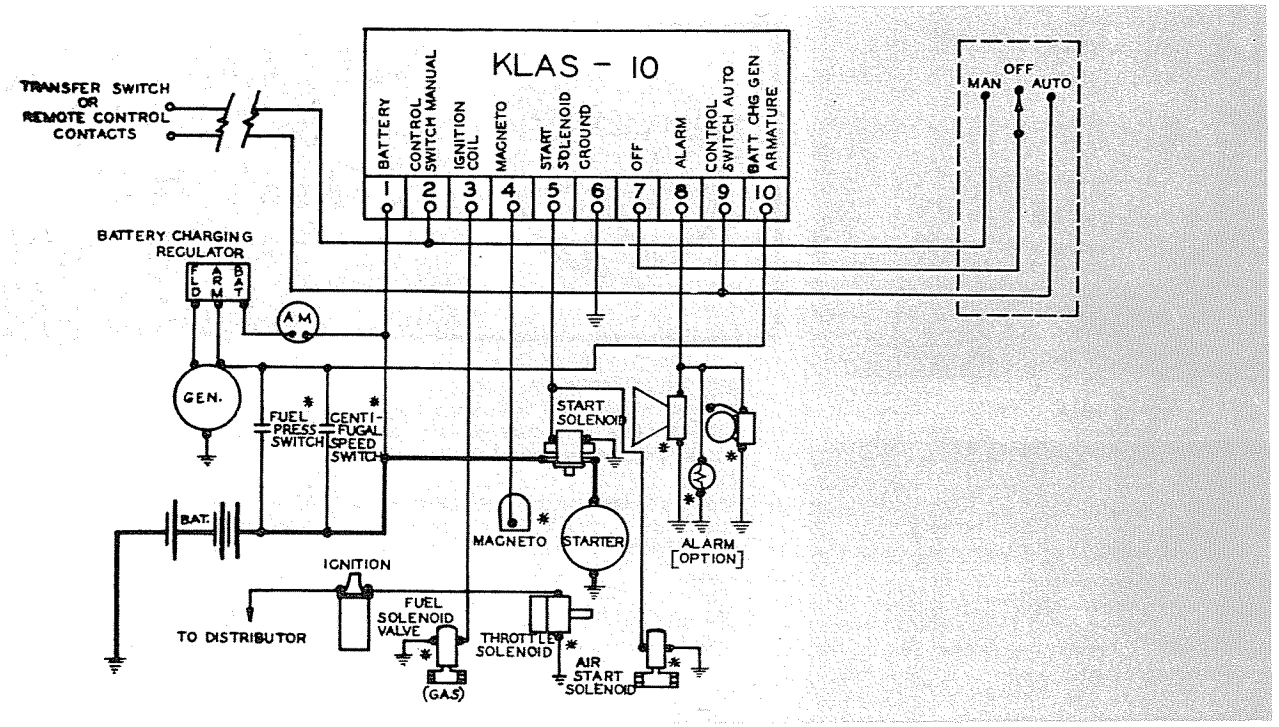

This instruction bulletin covers normal installation, operating and test procedures. The Klas 10 & Klas D10 controls provide basic engine control features. Cranking intervals of approximately 45 seconds is predetermined and may vary due to ambient temperature and battery voltage. After the crank interval and the engine has attempted to start and has not started, the control will remain off and alarm will be activated until reset. With noraml engine start, the battery charging generator will build up voltage, or if you use a N.O. centrifugal speed switch , will close as the engine speed reaches 300 RPM and disconnect cranking and engine will continue running.

The Klas 10 or Klas D10 is designed for automatic operation in conjunction with an automatic transfer switch or load start switch. (It may be used on either standard battery ignition, magneto or diesel systems, dependent on accessories specified.)

INSTALLATION: The Klas 10 or Klas D10 control horizontal chassis mounting is preferred. If severe vibration is present, shock insulators may be required to prevent the relays from cycling when not energized. Mounting in an enclosure or panel free of dust and fumes will afford maximum contact life and reduce spark hazard.

Wire termination should be made with solderless connectors. Use No. 14 flexible wire for short runs, heavier wire for remote locations.

CAUTION: Circuitry of this control is limited to 9 amps. Starter solenoids, audio alarms, etc., requiring more than 9 amps must be controlled by additional heavy-duty relays or contactors operated by the control.

A 3-position switch, failure light and decal are provided for control of the unit. Functions are "OFF, AUTOMATIC & MANUAL."

OPERATION: The "OFF" position should be used while servicing the engine, since cranking cannot occur. It is also used to shut down the engine for any reason and to reset the control after a failure.

In "MANUAL" position, the engine will start and operate normally with safety shutdown features in effect.

"AUTO" position places the control directly across a remote automatic transfer contactor or other device which then controls the engine.

The failure light will indicate an overcrank (engine failed to start in the 45 second crank cycle). It will remain on until unit is manually reset. An alarm horn (same voltage as control) may also be used in conjunction with failure light.

(Cranking time is approximately 45 seconds with normal ambient temperature and fully charged battery). A 5 watt resistor or potentiometer may be installed per diagram to increase or decrease cranking time. a 15 ohm resistor is supplied with the control. Less resistance will shorten the cycle. Should engine fail to start, the alarm light, if used, will go on and no further cranking will occur until manually reset. If engine start normally, check starter solenoid to see that it disengages at about ¼ engine speed.

Should unit fail to crank:

Check:
1. Battery
2. Fuse
3. Dirt in engine control contacts
4. Voltage at starter solenoid
5. Starter and solenoid for malfunction
6. Voltage on term. 10 (no voltage during cranking)

Unit will start, then fail:

Check:
1. Fuel and fuel supply filters
2. Ignition system - fuel or throttle solenoid
3. Carburetor adjustment or fuel injector pump - fuel solenoid valve
4. Engine control

Unit cranks but does not start:

Check:
1. Fuel and fuel supply lines for dirt or leaks
2. Ignition system, fuel or throttle solenoid
3. Carburetor adjustment, fuel injection pump, fuel solenoid valve
4. Voltage at ignition, throttle, fuel solenoid or fuel solenoid valve
5. Engine control - contacts may be dirty. Use contact cleaning tool, not abrasives.

Unit cranks continuously: (Over 60 seconds)

Check:
1. Delay relay (thermal) - may be defective
2. Low battery voltage at control (Low voltage will cause delay relay to be very slow acting.)

Unit starts but starter does not disengage:

Check:
1. All leads in crank disconnect circuit for continuity.
2. Voltage on term. 10 (battery voltage present after engine reaches 600 RPM)
   a) No voltage after engine starts indicates defective speed switch, if used for crank disconnect or no battery charging generator buildup.
   b) If voltage on terminal 10, check for defective relay 2 in control or open diode.

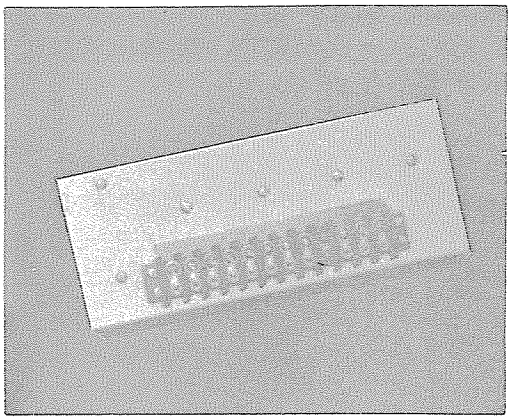

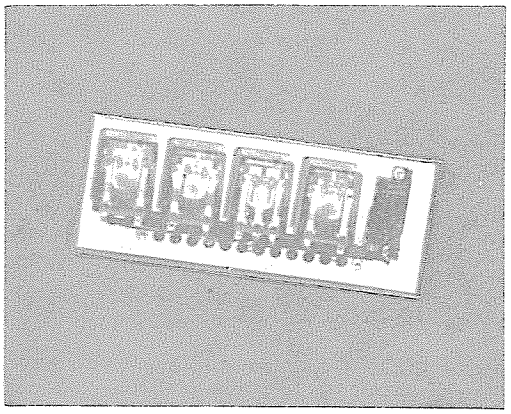

KATOLIGHT Standby Power Systems mankato, mn USA

AUTOMATIC START CONTROLS

MODEL KLAS 20-D2D

Component selection is engineered to provide reliability and accuracy of operation consistent with the application. Time delay relay is of the thermal type to give consistent service. All models feature enclosed contacts for longer life and greater reliability.

Mode of operation is selected by a three or four position switch as specified. In "MANUAL" position the control is energized immediately; in "AUTOMATIC", operation commences only when a remote set of contacts close, such as those of an automatic transfer switch; center position is "OFF". The four position rotary switch gives an additional "TEST" position in which the automatic control is out of the circuit and the engine may be started manually.

Current during cranking cycle flows thru normally closed contacts in relay 4 to time delay relay 5 and thru relay 2, normallly closed, to start solenoid. It also flows thru normally closed contact of relay 3 to activate relay 1 to remove magneto ground, if used, and energize ignition coil or throttle solenoid of diesel units.

If engine fails to start within about 45 seconds, relay 5 closes to lock out relays 4 and 3 to stop cranking and activate failure light or alarm. When engine starts, relay 2 pulls in receiving its signal from terminal 10 thru normally open speed switch (closes at 300 rpm) or from battery charging generator. This breaks cranking circuit and locks relay 2 in. Oil pressure circuit locks in thru relay 4 after relay 5 completes its cycle.

Oil pressure (NC) and high temperature (NO) switches when closed lock in relay 3 to drop out relay 1, breaking ignition or throttle solenoid circuit. Alarm and failure light are energized thru relay 3.

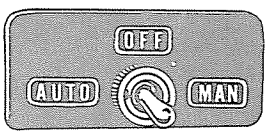

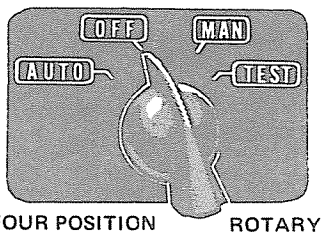

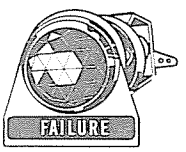

THREE POSITION SWITCH • FOUR POSITION ROTARY SWITCH • FAILURE INDICATING LIGHTS

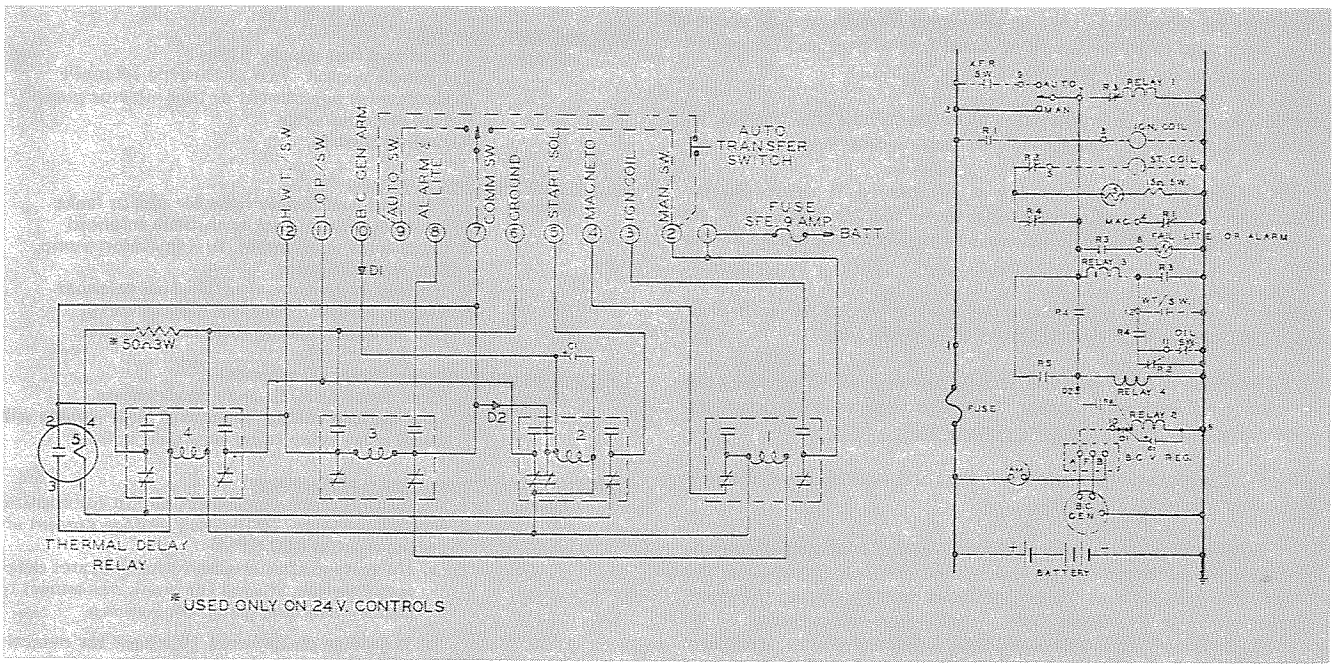

KATOLIGHT CORPORATION
MANKATO, MINNESOTA 56001

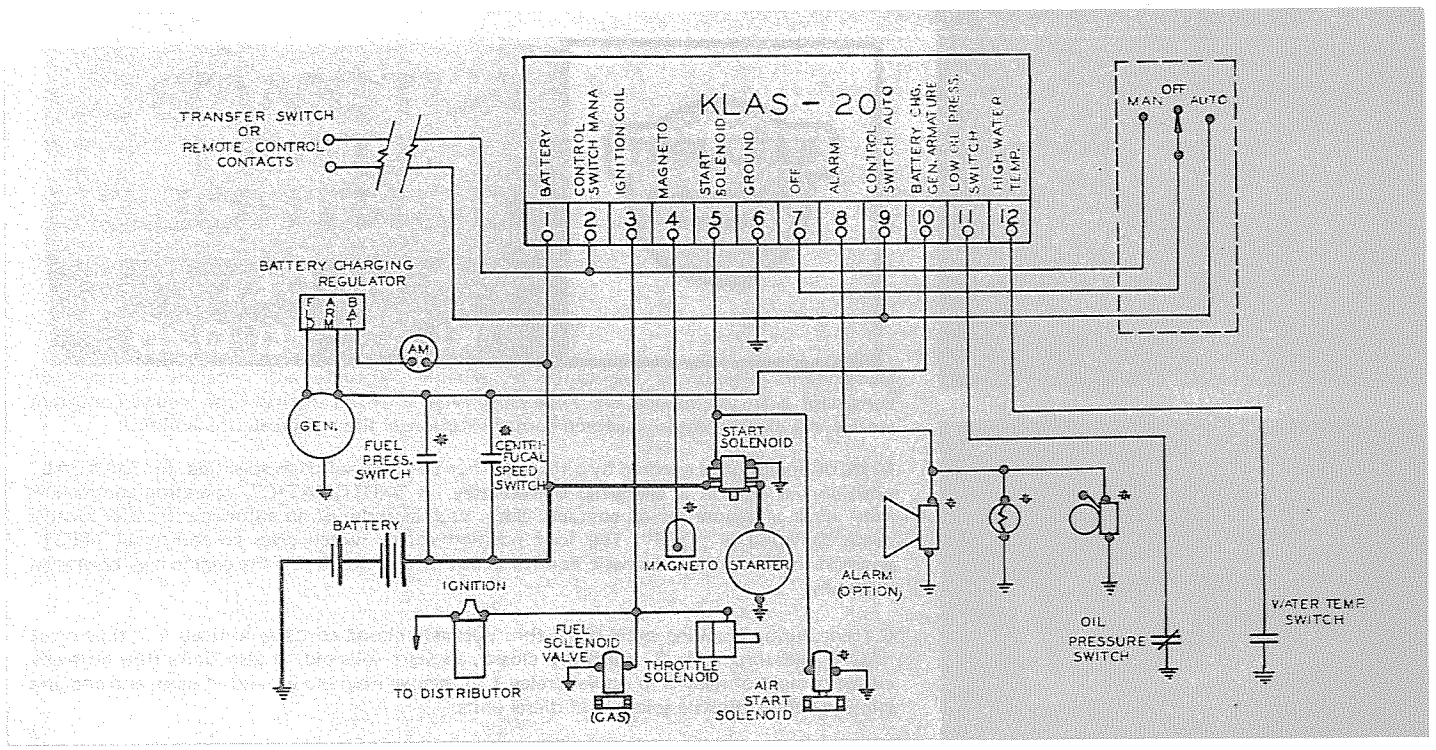

The instruction bulletin covers normal installation, operating and test procedures. The Klas 20 and D20 controls provide basic engine control features. Cranking interval of approximately 45 seconds is predetermined and may vary somewhat due to ambient temperature and battery voltage. After the crank interval and the engine has attempted to start and has not started, the control will remain off and alarm will be activated until reset. With normal engine start and operation safety shutdowns for high water temperature and low oil pressure are connected, providing normally open switches on the engine for these function. Oil pressure failure occurs instantly except immediately following cranking period. During this period, there is a 10 to 15 second delay provided.

The Klas 20 and D20 are designed for automatic operation in conjunction with an automatic transfer switch or load start switch. (It may be used on either standard battery ignition, magneto or diesel systems, dependent on accessories specified.)

INSTALLATION: With the Klas 20 or Klas D20 control, horizontal chassis mounting is preferred. If severe vibration is present, shock insulators may be required to prevent the relays from cycling when not energized. Mounting in an enclosure or panel free of dust and fumes will afford maximum contact life and reduce spark hazard.

Wire termination should be made with solderless connectors. Use No. 14 flexible wire for short runs, heavier wire for remote locations.

CAUTION: Circuitry of this control is limited to 9 amps. Starter solenoids, audio alarms, etc., requirring more than 9 amps must be controlled by additional heavy-duty relays or contactors operated by the control.

A 3 position switch, failure lights and decal are provided for control of the unit. Functions are "OFF, AUTOMATIC & MANUAL".

OPERATION: The "OFF" position should be used while servicing the engine, since cranking cannot occur. It is also used to shut down the engine for any reason and to reset the control after a failure.

In "MANUAL' position, the engine will start and operate normally with safety shutdown features in effect.

"AUTO" position places the control directly across a remote automatic transfer contactor or other device which then controls the engine. The failure light will indicate that the engine failed to start during the crank cycle (overcrank) or shutdown from high water temperature or oil pressure failure. It will remain on until unit is manually reset. An Alarm horn (same voltage as contol) may also be used in conjunction with failure light.

Cranking time is approximately 45 seconds with normal ambient temperature and fully charged battery. A 5 watt resistor or potentiometer may be installed per diagram to increase or decrease cranking time. A 50 ohm resistor is supplied with the control for 24 VDC only. Less resistance will shorten the cycle. Should engine fail to start, the alarm light, if used, will go on and no further cranking will occur until manually reset.

RESET CONTROL AFTER FAILURE BY TURNING FUNCTION SWITCH TO "OFF".

Should unit fail to crank:

Check:
1. **Battery**
2. **Fuse**
3. **Dirt in engine control contacts**
4. **Voltage at starter solenoid**
5. **Starter and solenoid for malfunction**
6. **Voltage on term. 10 (no voltage during cranking)**

Unit will start, then fail:

Check:
1. **Fuel and fuel supply filters**
2. **Ignition system - fuel or throttle solenoid**
3. **Carburetor adjustment or fuel injector pump - fuel solenoid valve**
4. **Engine control**

Unit cranks but does not start:

Check:
1. **Fuel and fuel supply lines for dirt or leaks**
2. **Ignition system, fuel or throttle solenoid**
3. **Carburetor adjustment, fuel injection pump, fuel solenoid valve**
4. **Voltage at ignition, throttle, fuel solenoid**
5. **Engine control - contacts may be dirty. Use contact cleaning tool, not abrasives.**

Unit cranks continuously: (over 60 seconds)

Check
1. **Time delay relay 5 - may be defective.**
2. **Low battery voltage at control (low voltage will cause delay relay to be very slow acting)**

Unit starts but starter does not disengage:

Check:
1. **All leads in crank disconnect circuit for continuity.**
2. **Voltage on term. 10 (battery voltage present after engine reaches 600 RPM)**
   a) **No voltage after engine starts indicates defective speed switch, if used for crank disconnect or no battery charging generator buildup.**
   b) **If voltage on terminal 10, check for defective relay 2 in control or open diode.**

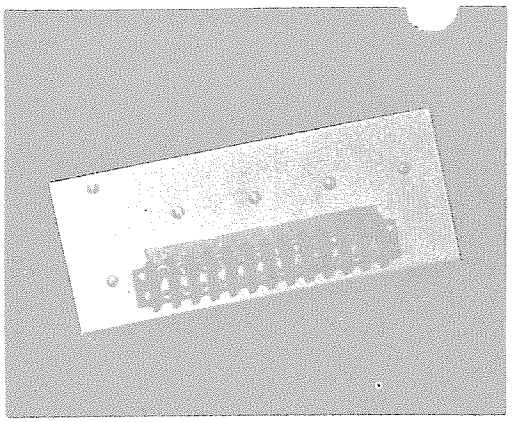

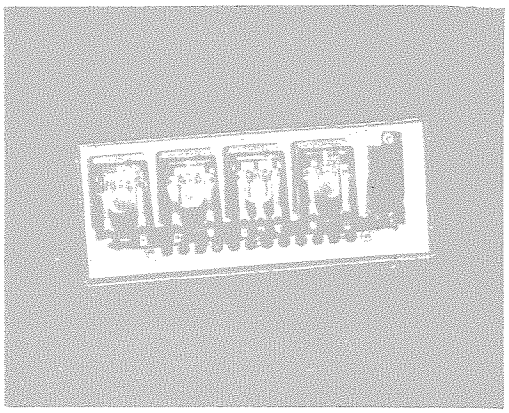

KATOLIGHT
MADE IN U.S.A.
MANKATO, MINN.
LIGHT & POWER PLANTS

AUTOMATIC START CONTROLS

MODEL KLAS [redacted] D30

Component selection is engineered to provide reliability and accuracy of operation consistent with the application. Time delay relay is of the thermal type to give consistent service. All models feature enclosed contacts for longer life and greater reliability.

Mode of operation is selected by a three or four position switch as specified. In "MANUAL" position the control is energized immediately; in "AUTOMATIC", operation commences only when a remote set of contacts close, such as those of an automatic transfer switch; center position is "OFF". The four position rotary switch gives an additional "TEST" position in which the automatic control is out of the circuit and the engine may be started manually.

Current during cranking cycle flows thru normally closed contacts in relay 4 to time delay relay 5 and thru relay 2, normallly closed, to start solenoid. It also flows thru normally closed contact of relay 3 to activate relay 1 to remove magneto ground, if used, and energize ignition coil or throttle solenoid of diesel units.

If engine fails to start within about 45 seconds, relay 5 closes to lock out relays 4 and 3 to stop cranking and activate failure light or alarm. When engine starts, relay 2 pulls in receiving its signal from terminal 10 thru normally open speed switch (closes at 300 rpm) or from battery charging generator. This breaks cranking circuit and locks relay 2 in. Oil pressure circuit locks in thru relay 4 after relay 5 completes its cycle.

Oil pressure (NC) and nigh temperature (NO) switches when closed lock in relay 3 to drop out relay 1, breaking ignition or throttle solenoid circuit. Alarm and failure light are energized thru relay 3.

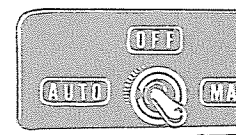

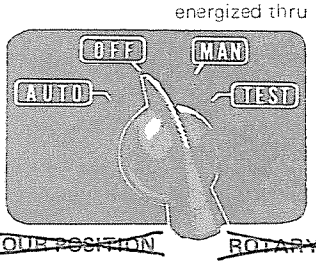

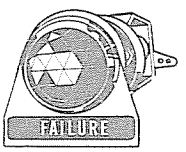

THREE POSITION SWITCH • ~~FOUR POSITION ROTARY SWITCH~~ • FAILURE INDICATING LIGHTS

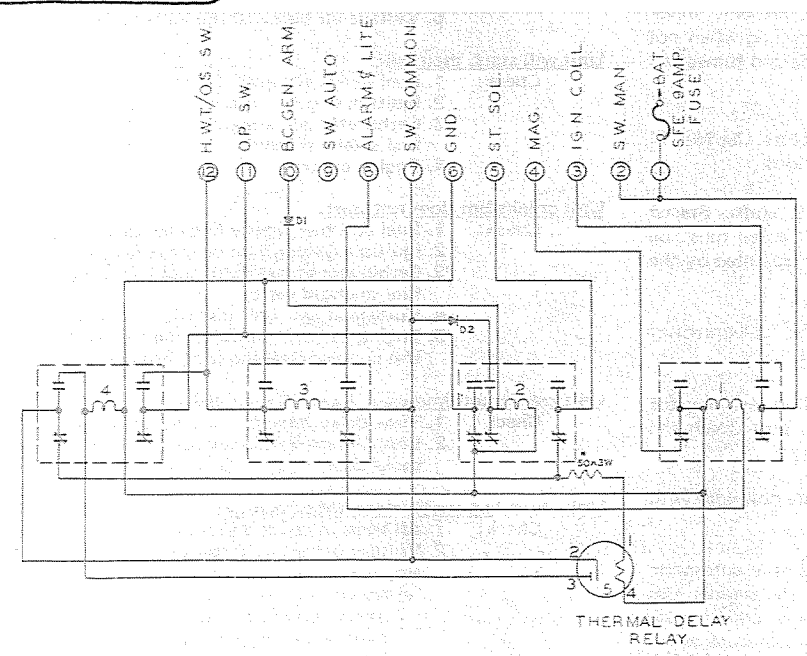

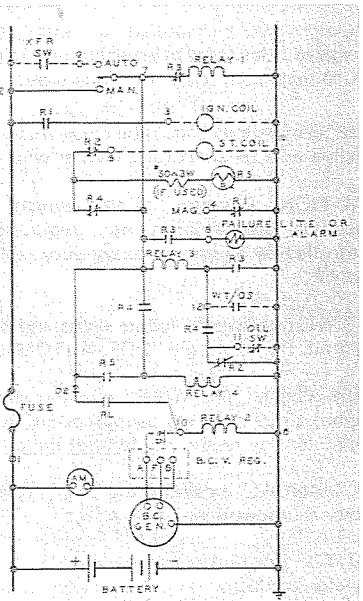

*USED ONLY ON 24 V. CONTROLS

KATOLIGHT CORPORATION
MANKATO, MINNESOTA 56001 PHONE 507 387-7973

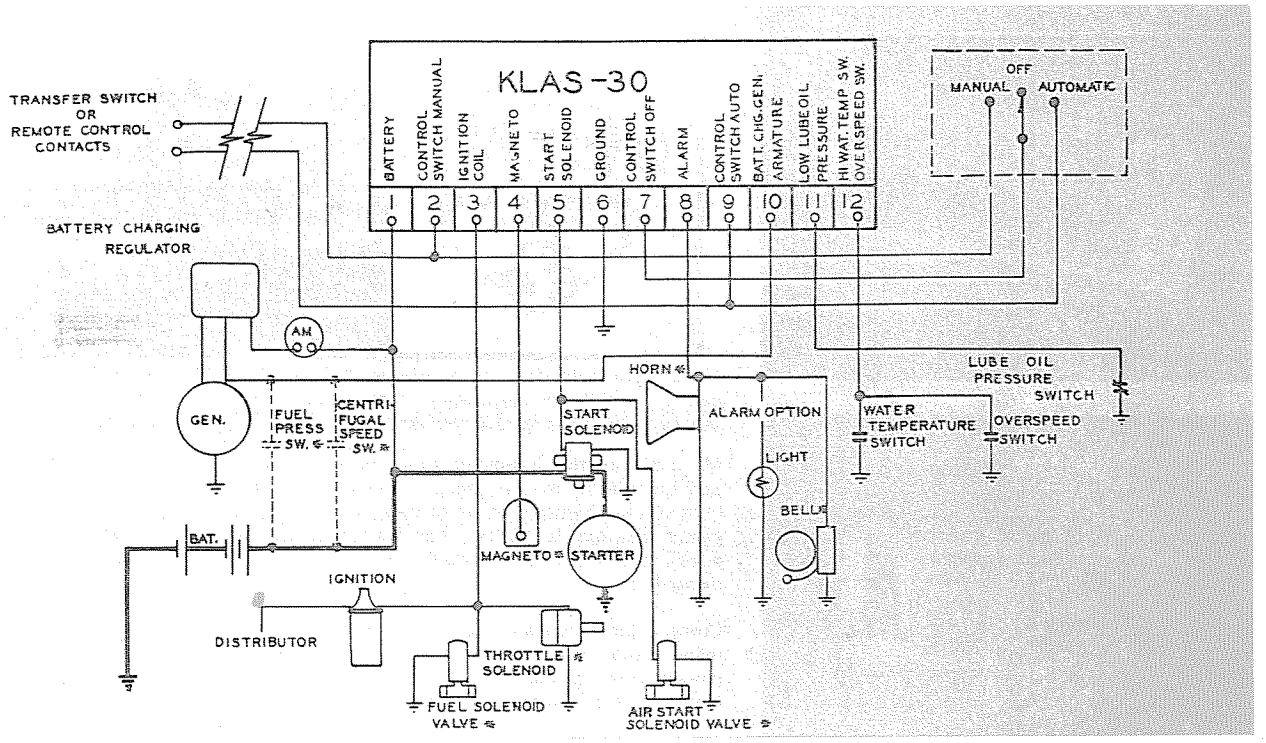

This instruction bulletin covers normal installation, operating and test procedures. The Klas 30 and D30 controls provide basic engine control features. Cranking interval of approximately 45 seconds is predetermined and may vary somewhat due to ambient temperature and battery voltage. After the crank interval and the engine has attempted to start and has not started, the control will remain off and alarm will be activated until reset. With normal engine start and operation safety shutdowns for high water temperature, low oil pressure and overspeed are connected, providing normally open switches on the engine for these functions. Oil pressure failure occurs instatly except immediately following cranking period. During this period, there is a 10 to 15 second delay provided.

The Klas 30 and Klas D30 is designed for automatic operation in conjunction with an automatic transfer switch or load start switch. (It may be used on either standard battery ignition, magneto or diesel systems, dependent on accessories specified.)

INSTALLATION: With the Klas 30 and Klas D30 control, horizontal chassis mounting is preferred. If severe vibration is present, shock insulators may be required to prevent the relays from cycling when not energized. Mounting in an enclosure or panel free of dust and fumes will afford maximum contact life and reduce spark hazard.

Wire terminations should be made with solderless connectors. Use No. 14 flexible wire for short runs, heavier wire for remote locations.

CAUTION: Circuitry of this control is limited to 9 amps. Starter solenoids, audio alarms, etc., requiring more than 9 amps must be controlled by additional heavy-duty relays or contactors operated by the control.

A 3 position switch, failure lights and decal are provided for control of the unit. Functions are "OFF, AUTOMATIC & MANUAL".

OPERATION: The "OFF" position should be used while servicing the engine, since cranking cannot occur. It is also used to shut down the engine for any reason and to reset the control after a failure.

In "MANUAL" position, the engine will start and operate normally with safety shutdown features in effect.

"AUTO" position places the control directly across a remote automatic transfer contactor or other device which then controls the engine. The failure light will indicate engine failed to start during crank cycle (overcrank) or shutdown from overspeed, high water temperature or oil pressure failure. It will remain on until unit is manually reset. An alarm horn (same voltage as control) may also be used in conjunction with failure light.

Cranking time is approximately 45 seconds with normal ambient temperature and fully charged battery. A 5 watt resistor or potentiometer may be installed per diagram to increase or decrease cranking time. A 50 ohm resistor is supplied with the control for 24 VDC only. Less resistance will shorten the cycle. Should engine fail to start, the alarm light, if used, will go on and no further cranking will occur until manually reset.

RESET CONTROL AFTER FAILURE BY TURNING FUNCTION SWITCH TO "OFF"

Should unit fail to crank:
Check:
1. Battery
2. Fuse
3. Dirt in engine control contacts
4. Voltage at starter solenoid
5. Starter and solenoid for malfunction
6. Voltage on term. 10 (no voltage during cranking)

Unit will start, then fail:
Check:
1. Fuel and fuel supply filters
2. Ignition system - fuel or throttle solenoid
3. Carburetor adjustment or fuel injector pump - fuel solenoid valve
4. Engine control

Unit cranks but does not start:
Check:
1. Fuel and fuel supply lines for dirt or leaks
2. Ignition system, fuel or throttle solenoid
3. Carburetor adjustment, fuel injection pump, fuel solenoid valve
4. Voltage at ignition, throttle, fuel solenoid
5. Engine control · contacts may be dirty. Use contact cleaning tool, not abrasives.

Unit cranks continuously: (over 60 seconds)
Check
1. Time delay relay 5 - may be defective.
2. Low battery voltage at control (low voltage will cause delay relay to be very slow acting)

Unit starts but starter does not disengage:
Check:
1. All leads in crank disconnect circuit for continuity.
2. Voltage on term. 10 (battery voltage present after engine reaches 600 RPM)
   a) No voltage after engine starts indicates defective speed switch, if used for crank disconnect or no battery charging generator buildup.
   b) If voltage on terminal 10, check for defective relay 2 in control or open diode.

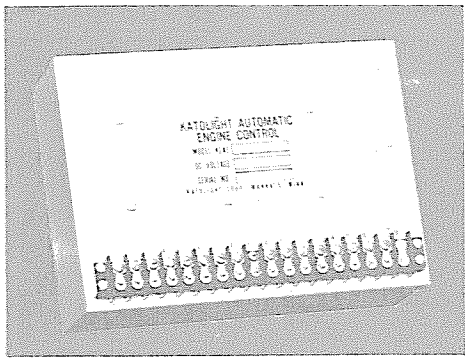

KATOLIGHT
MADE IN U.S.A.
MANKATO, MINN.
LIGHT & POWER PLANTS

AUTOMATIC START CONTROLS

MODEL KLAS 33 - D33

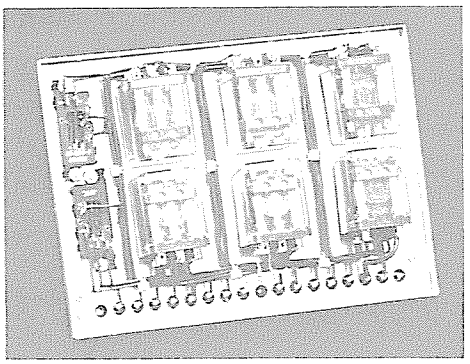

Components are carefully selected to provide maximum reliability and service life. The critical engine-crank circuits are equipped with highly dependable magnetic time delay relays for consistant timing of crank and rest intervals.

Mode of operation is selected by a three or four position switch as specified. In "MANUAL" position the control is energized immediately; in "AUTOMATIC", operation commences only when a remote set of contacts close, such as those of an automatic transfer switch; "OFF" position disables engine operation. The four position switch gives an additional "TEST" position in which the automatic control is out of the circuit and engine may be started manually.

Current during cranking cycle flows thru normally closed contacts of relays 5, 6, 3 & 4 to energize relay 1 which closes completing the current path to ignition coil (term. 3) & thru (N.C.) contact relay 2 to start solenoid (term. 5) & to the coil of cranking timing relay (7).

If engine fails to start within 45 seconds, relay 7 closes to energize relay 4 to activate the overcrank lite & failure alarm. With relay 4 energized, relay 1 is deenergized to terminate cranking. Should engine start normally; relay 2 is energized from Terminal 10, which receives a positive voltage from the crank disconnect switch closing or battery charging generator. The oil pressure circuit has a built-in 15 second delay (relay 8) after engine starts.

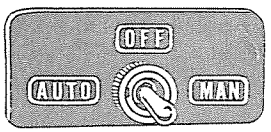

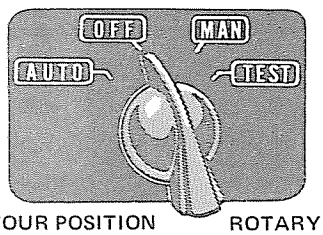

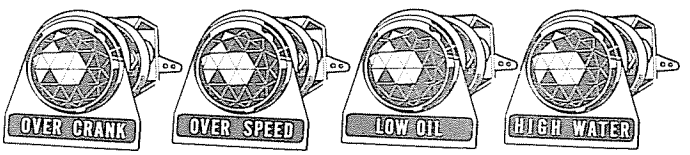

THREE POSITION SWITCH • FOUR POSITION ROTARY SWITCH • FAILURE INDICATING LIGHTS

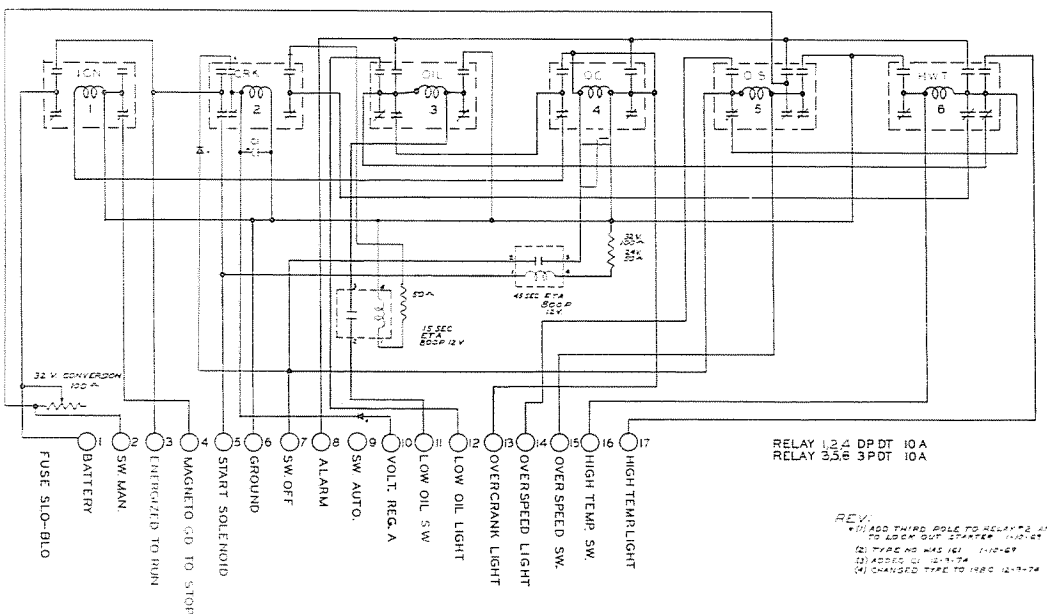

KATOLIGHT CORPORATION
MANKATO, MINNESOTA 56001

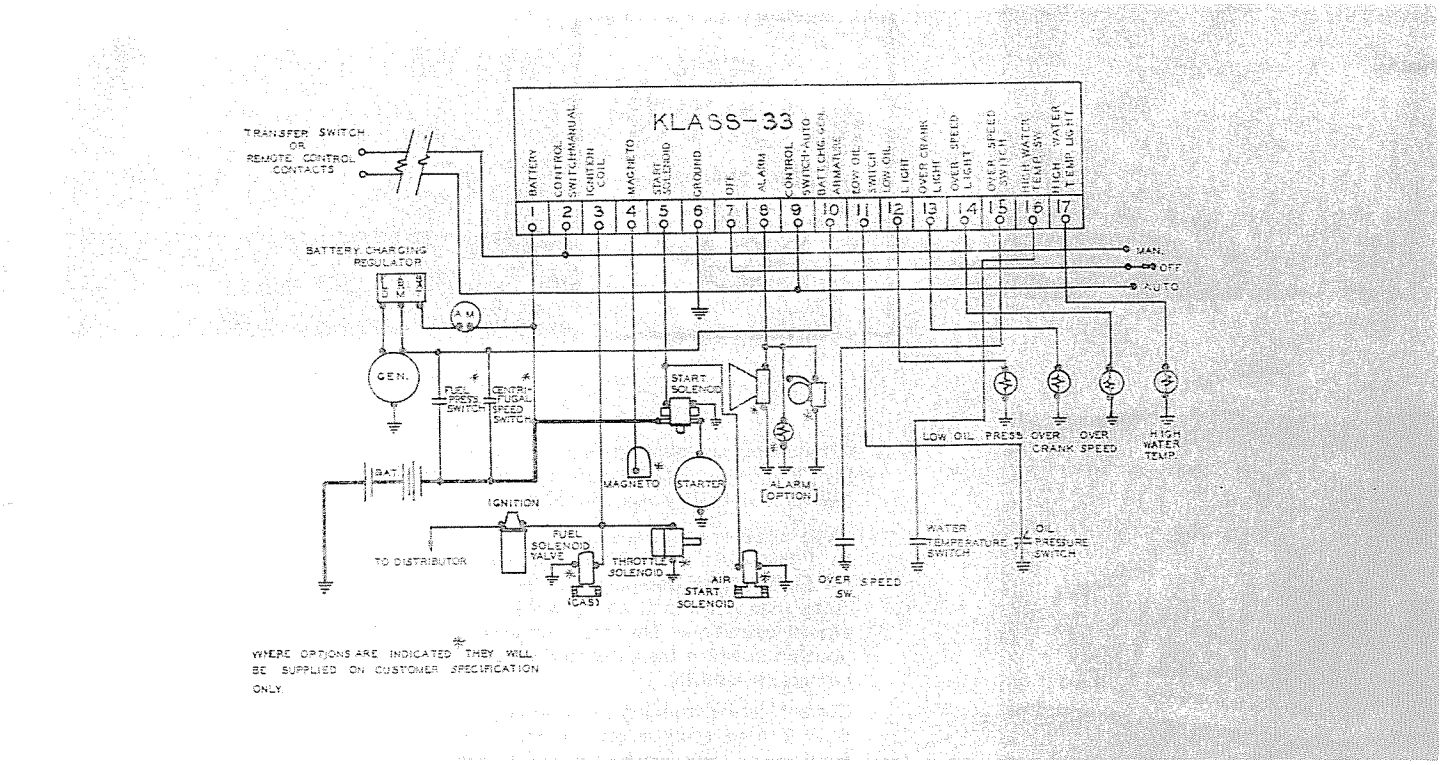

This instruction bulletin covers normal installation, operating and test procedures. The Klas 33 & D33 controls provide basic engine control features. Cranking interval of approximately 45 seconds is predetermined and may vary somewhat due to ambient temperature and battery voltage. After the crank interval and the engine has attempted to start and has not started, the control will remain off and alarm will be activated until reset. With a normal engine start the unit will shutdown immediately when any of the safety switches close. The safety switches are mounted on the engine using the normally open contacts for high water temperature and overspeed alarms and the normally closed contacts for low oil pressure alarm. Oil pressure failure occurs immediately except following cranking period. During this period, there is a 10 to 15 second delay provided.

The Klas 33 or Klas D33 is designed for automatic operation in conjunction with an automatic transfer switch or load start switch. (It may be used on either standard battery ignition, magneto or diesel systems, dependent on accessories specified).

INSTALLATION: The Klas 33 or Klas D33 control horizontal chassis mounting is preferred. If severe vibration is present, shock insulators may be required to prevent the relays from cycling when not energized. Mounting in an enclosure or panel free of dust and fumes will afford maximum contact life and reduce spark hazard.

Wire terminations should be made with solderless connectors. Use No. 14 flexible wire for short runs, heavier wire for remote locations.

CAUTION: Circuitry of this control is limited to 9 amps. Starter solenoids, audio alarms, etc., requiring more than 9 amps must be controlled by additional heavy-duty relays or contactors operated by the control.

A 3-position switch, failure lights and decal are provided for control of the unit. Functions are "AUTOMATIC, OFF & MANUAL."

OPERATION: The "OFF" position should be used while servicing the engine, since cranking cannot occur. It is also used to shut down the engine for any reason and to reset the control after a failure.

In "MANUAL" position, the engine will start and operate normally with safety shutdown features in effect.

"AUTO" position places the control directly across a remote automatic transfer contactor or other device which then controls the engine. The failure lights will indicate either an overcrank (unit failed to start during cranking cycle) or a shutdown from overspeed (when used with mechanical overspeed switch), high water temperature or oil pressure failure. It will remain on until unit is manually reset. An alarm horn (same voltage as control) may also be used in conjunction with failure lights.

RESET CONTROL AFTER FAILURE BY TURNING FUNCTION SWITCH TO "OFF."

Should unit fail to crank:

Check:
1. Battery
2. Fuse
3. Dirt in engine control contacts
4. Voltage at starter solenoid
5. Starter and solenoid for malfunction
6. Voltage on Term. 10 (no voltage during cranking)

Unit will start, then fail:

Check:
1. Fuel and fuel supply filters
2. Ignition system - fuel or throttle solenoid
3. Carburetor adjustment or fuel injector pump - fuel solenoid valve
4. Engine control

Unit cranks but does not start:

Check:
1. Fuel and fuel supply lines for dirt or leaks
2. Ignition system, fuel or throttle solenoid
3. Carburetor adjustment, fuel injection pump, fuel solenoid valve
4. Voltage at ignition, throttle, fuel solenoid
5. Engine control - Contacts may be dirty. Use contact cleaning tool, not abrasives.

Unit cranks continuously: (over 60 seconds)

Check:
1. Delay relay - may be defective
2. Low battery voltage at control (Low voltage will cause delay relay to be very slow acting.)

Unit starts but starter does not disengage:

Check:
1. All leads in crank disconnect circuit for continuity.
2. Voltage on term. 10 (battery voltage present after engine reaches 600 rpm)
   a) No voltage after engine starts indicates defective speed switch, if used for crank disconnect, or no battery charging generator buildup.
   b) If voltage on terminal 10, check for defective relay 2 in control.

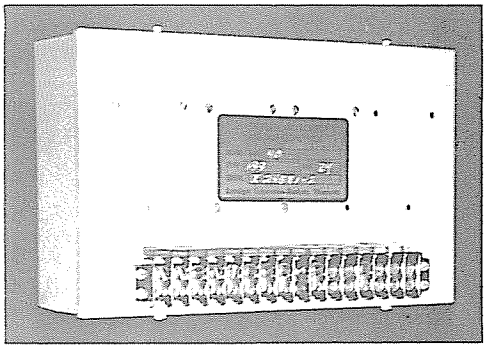

AUTOMATIC START CONTROLS

MADE IN U.S.A. KATOLIGHT MANKATO, MINN. LIGHT & POWER PLANTS

MODEL KLAS 40-D40

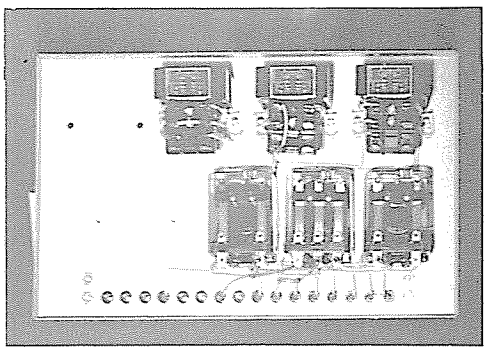

Components are carefully selected to provide maximum reliability and service life. The critical engine-crank circuits are equipped with highly dependable solid state time delay relays for consistent timing of crank and rest intervals.

Mode of operation is selected by a three or four position switch as specified. In "MANUAL" position the control is energized immediately; in "AUTOMATIC", operation commences only when a remote set of contacts close, such as those of an automatic transfer switch; center position is "OFF". The four position rotary switch gives an additional "TEST" position in which the automatic control is out of the circuit and the engine may be started manually.

Current during cranking cycle flows thru closed contacts of relay 3 to coil of crank relay 1. It closes and completes starting circuit (terminals 3 & 5) and coil circuit of time relay No. 4. After an interval of about 7 seconds, No. 4 pulls in momentarily, its contacts energizing No. 3 relay which drops out relay 1 crank circuit. Relay 3 remains closed to supply current to time relay 5 for a 7 second "rest" period until 5 opens to break lock-out of 3. Current then flows again as in initial cranking cycle.

Unless engine starts, this sequence continues until relay 6 closes in about 90 seconds, locking in relay 3. Overcrank light and alarm is then activated and cranking stops.

If the engine start, voltage appears at relay 2 from battery charging generator or centrifugal switch, breaking starting solenoid current and continuity of relay 6, discontinuing cranking limiter.

Reset control by turning to "OFF" position.

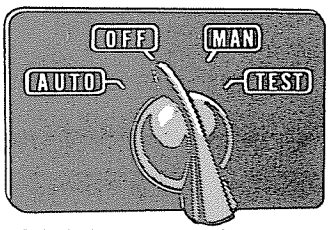

4 POSITION ROTARY SWITCH

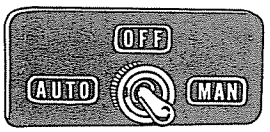

3 POSITION SWITCH



FAILURE INDICATING LIGHT

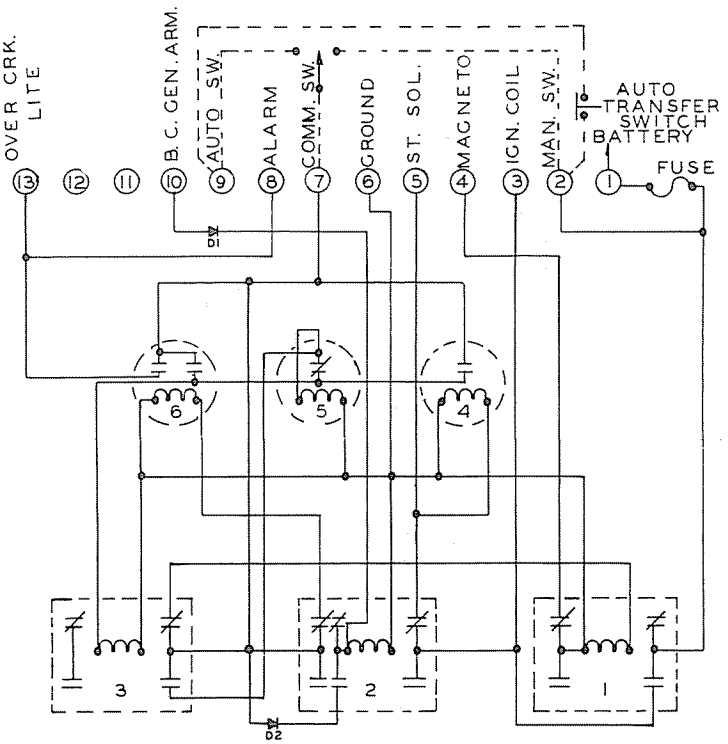

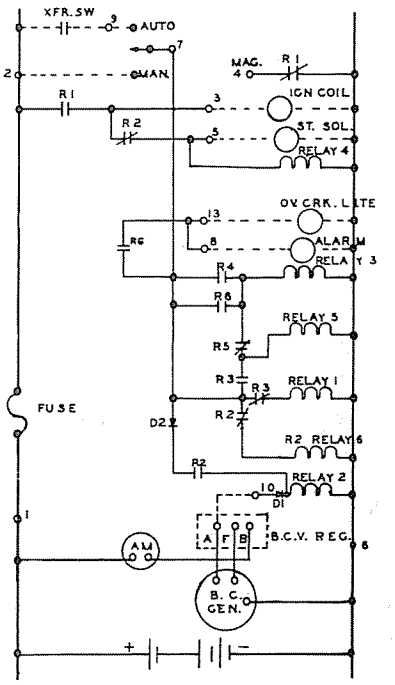

KATOLIGHT CORPORATION

MANKATO, MINNESOTA 56001

KATOLIGHT AUTOMATIC ENGINE CONTROL OPERATING INSTRUCTIONS — MODEL KLAS 40 & D40

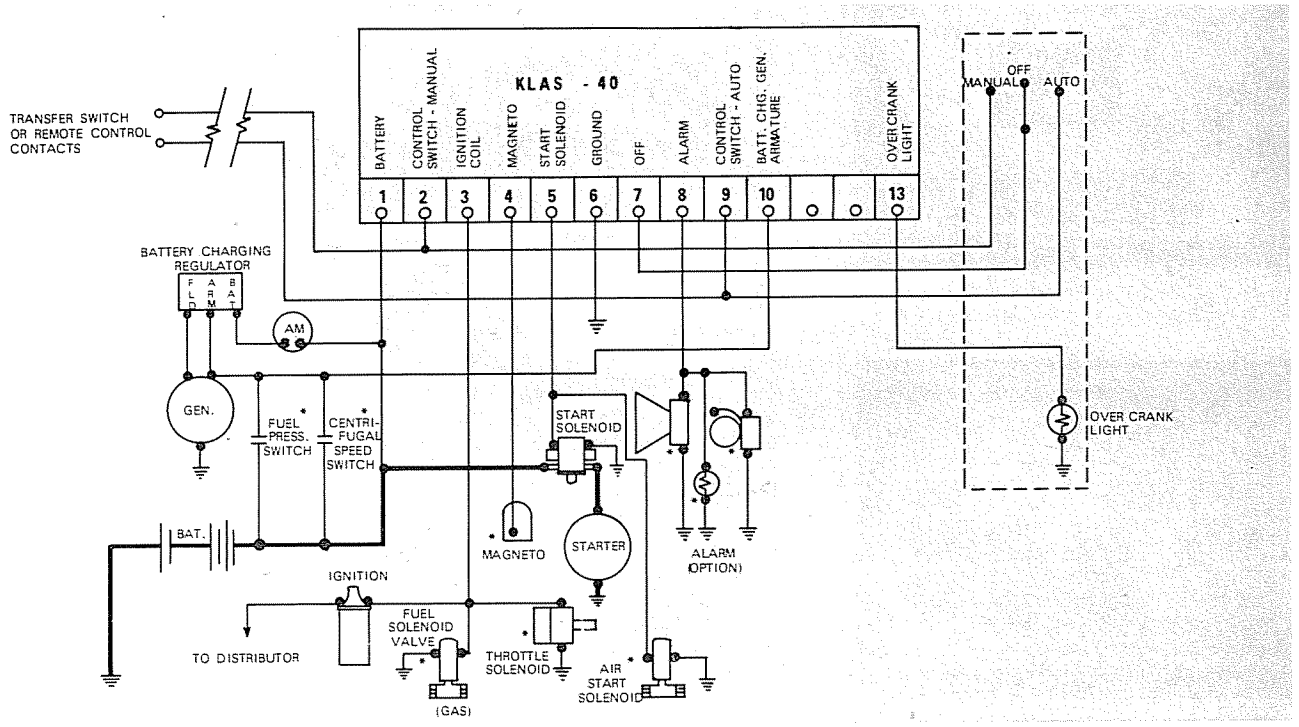

This instruction bulleting covers normal installation, operating and test prodecures. This Klas 40 and Klas D40 controls provide basic engine control features. This control has 5 crank cycles of approximately 7 to 10 second crank and 7 to 10 second rest for an approximate total of 90 seconds. This is predetermined by the settings of rheostats on solid state relays 4, 5, and 6. These solid state relays give precise timing and are not effected by the fluctuations of ambient temperature and battery voltage. After the crank interval and the engine has attempted to start and has not started, the control will remain off and alarm will be activated until reset. With normal engine start the battery charging generator will build up voltage, or if you use a N.O. Centrifugal Speed Switch, will close as the engine reaches 300 rpm and disconnect cranking and engine will continue running.

The Klas 40 or Klas D40 is designed for automatic operation in conjunction with an automatic transfer switch or load start switch. (It may be used on either standard battery ignition, magneto or diesel systems, dependent on accessories specified).

INSTALLATION: The Klas 40 or Klas D40 control horizontal chassis mounting is preferred. If severe vibration is present, shock insulators may be required to prevent the relays from cycling when not energized. Mounting in an enclosure or panel free of dust and fumes will afford maximum contact life and reduce spark hazard.

Wire terminations should be made with solderless connectors. Use No. 14 flexible wire for short runs, heavier wire for remote locations.

CAUTION: Circuitry of this control is limited to 9 amps. Starter solenoids, audio alarms, etc., requiring more than 9 amps must be controlled by additional heavy-duty relays or contactors operated by the control.

A 3-position switch, failure lights and decal are provided for control of the unit. Functions are "OFF, AUTOMATIC & MANUAL".

OPERATION: The "OFF" position should be used while servicing the engine, since cranking cannot occur. It is also used to shut down the engine for any reason and to reset the control after a failure.

In "MANUAL" position, the engine will start and operate normally with safety shutdown features in effect.

"AUTO" position places the control directly across a remote automatic transfer contactor or other device which then controls the enigne. The failure light will indicate overcrank (engine failed to start during the 90 second crank cycle). It will remain on until unit is manually reset. An alarm horn (same voltage as control) may also be used in conjunction with failure light.

Total cyclic cranking time is approximately 90 seconds with normal ambient temperature and fully charged battery. There are 5 cranking cycles of 10 seconds each which can be varied by adjusting potentiometer R5. There are 4 rest cycles of 10 seconds eacheach which can be varied by adjusting potentiometer R4. Should engine fail to start in this time the overcrank light will go on and the alarm will ring (if used) and no further cranking will occur until manually reset. If engine starts normally, check starter solenoid to see that it disengages at about ¼ engine speed.

Should unit fail to crank:

Check:
1. **Battery**
2. **Fuse**
3. **Dirt in engine control contacts**
4. **Voltage at starter solenoid**
5. **Starter and solenoid for malfunction**
6. **Voltage on term. 10 (no voltage during cranking)**

Unit will start, then fail:

Check:
1. **Fuel and fuel supply filters**
2. **Ignition system - fuel or throttle solenoid**
3. **Carburetor adjustment or fuel injector pump - fuel solenoid valve**
4. **Engine control**

Unit cranks but does not start:

Check:
1. **Fuel and fuel supply line for dirt or leaks**
2. **Ignition system, fuel or throttle solenoid**
3. **Carburetor adjustment, fuel injection pump, fuel solenoid valve**
4. **Voltage at ignition, throttle, fuel solenoid or fuel solenoid valve**
5. **Engine control - contacts may be dirty. Use contact cleaning tool, not abrasives.**

Unit cranks continuously: (over 100 seconds)

Check:
1. **Defective time delay relay No. 6.**

Unit starts but starter does not disengage:

Check:
1. **All leads in crank disconnect circuit for continuity.**
2. **Voltage on term. 10 (battery voltage present after engine reaches 600 RPM)**
   - **a) No voltage after engine starts indicates defective speed switch, if used for crank disconnect or no battery charging generator buildup.**
   - **b) If voltage on terminal 10, check for defective relay 2 in control or open diode**

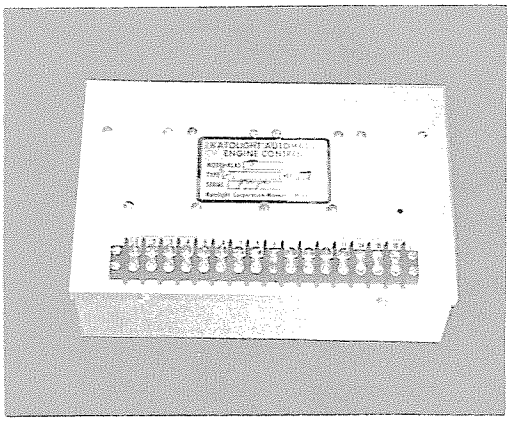

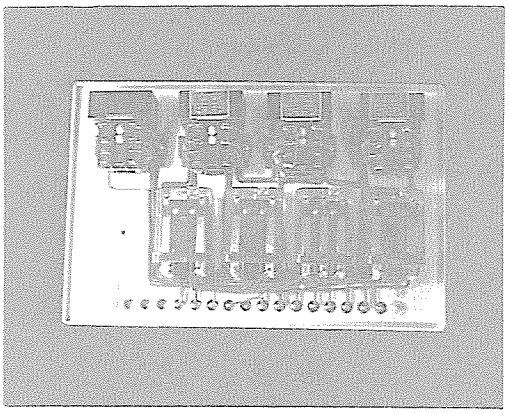

KATOLIGHT
MADE IN U.S.A.
MANKATO, MINN.
LIGHT & POWER PLANTS

AUTOMATIC START CONTROLS

MODEL KLAS 50-D50

Components are carefully selected to provide maximum reliability and service life. The critical engine-crank circuits are equipped with highly dependable solid state time delay relays for consistent timing of crank and rest intervals.

Mode of operation is selected by a three or four position switch as specified. In "MANUAL" position the control is energized immediately; in "AUTOMATIC", operation commences only when a remote set of contacts close, such as those of an automatic transfer switch; center position is "OFF". The four position rotary switch gives an additional "TEST" position in which the automatic control is out of the circuit and the engine may be started manually.

Current during cranking cycle flows thru closed contacts of relays 3 and 4 to coil of crank relay 1. It closes and completes starting circuit (terminal 3 & 5) and coil circuit of time relay 5. After an interval of about 7 seconds, No. 5 pulls in momentarily, its contacts energizing relay 4 which drops out relay 1 crank circuit. Relay 4 remains closed to supply current to time realy 6 for a 7 second "rest" period until 6 opens to break lockout of 4. Current then flows again as in initial cranking cycle.

Unless engine starts, this sequence continues until relay 7 closes in about 90 seconds, locking in relay 4. Overcrank light and alarm is then indicated and cranking stops.

If the engine starts, coltage appears at relay 2 from battery charging generator or centrifugal switch, breaking starting solenoid current and continuity of relay 7, discontinuing cranking limiter. Relay 8 is energized in about 15 seconds to complete oil pressure/high temperature failure circuit.

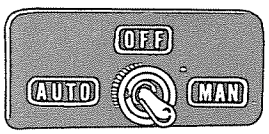

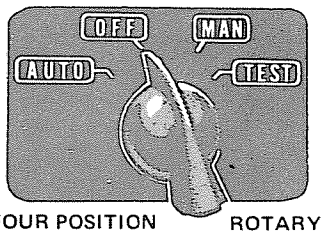

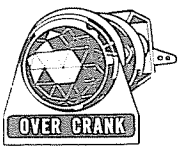

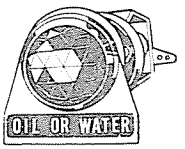

THREE POSITION SWITCH • FOUR POSITION ROTARY SWITCH • FAILURE INDICATING LIGHTS

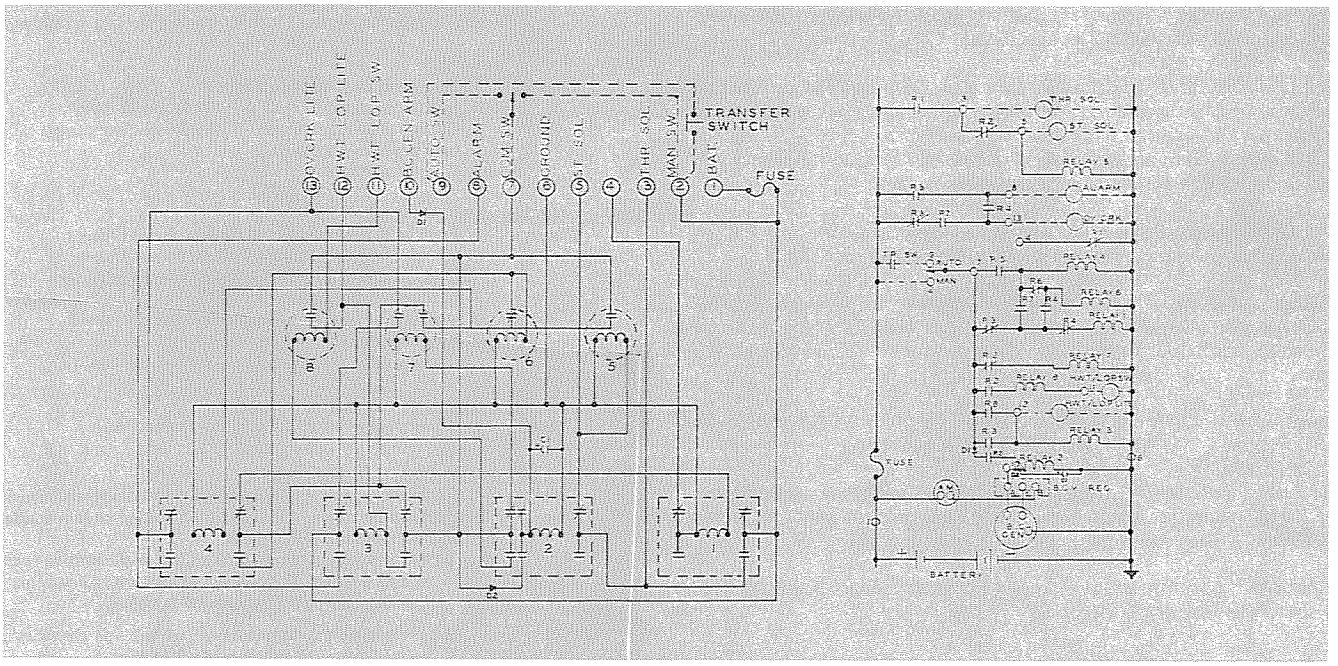

KATOLIGHT CORPORATION
MANKATO, MINNESOTA 56001

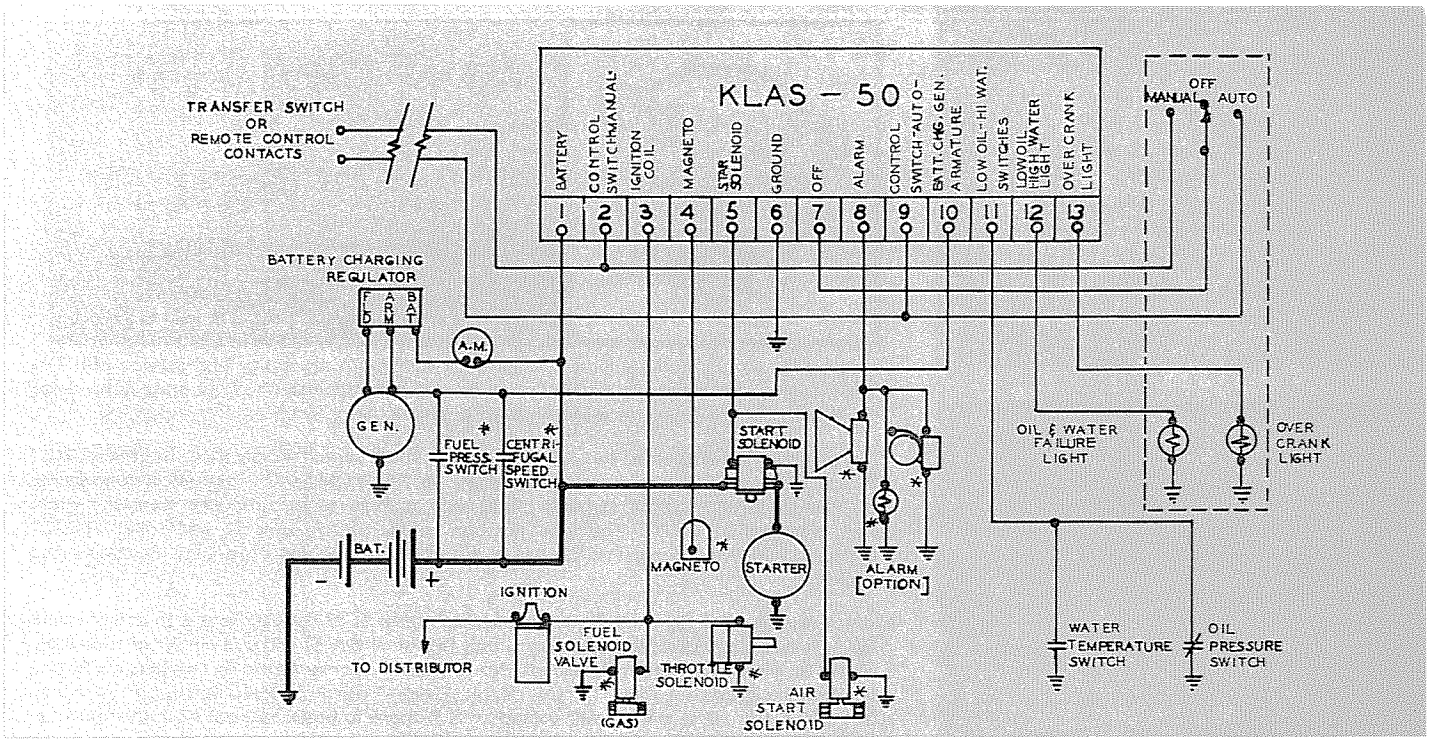

This instruction bulletin covers normal installation, operating and test procedures. The Klas 50 and Klas D50 controls provide basic engine control features. This control has 5 crank cycles of approximately 7 to 10 seconds cranking and 7 to 10 seconds rest for an approximate cranking time of 90 seconds. This is predetermined by the settings of rheostats on solid state relays 7, 8 and 9. These solid state relays give precise timing and are not effected by the fluctuations of ambient temperature and battery voltage. After the crank inteval and the engine has attempted to start and has not started, the control will remain off and the alarm and overcrank light will be activated until reset. With normal engine start and operation safety shutdowns for high water temperature and low oil pressure are connected, providing switches on the engine for these functions. Oil pressure failure occurs instantly except immediately following cranking period. During this period, there is a 10 to 15 second delay provided.

The Klas 50 and Klas D50 are designed for automatic operation in conjunction with an automatic transfer switch or load start switch. (It may be used on either standard battery ignition, megneto or diesel systems, dependent on accessories specified.)

INSTALLATION: With the Klas 50 and Klas D50 controls, horizontal chassis mounting is preferred. If severe vibration is present, shock insulators may be required to prevent the relays from cycling when not energized. Mounting in an enclosure or panel free of dust and fumes will afford maximum contact life and reduce spark hazard.

Wire terminations should be made with solderless connectors. Use No. 14 flexible wire for short runs, heavier wire for remote locations.

CAUTION: Circuitry of this control is limited to 9 amps. Starter solenoids, audio alarms, etc., requiring more than 9 amps must be controlled by additional heavy duty relays or contactors operated by the control.

A 3 position switch, failure lights and decal are provided for control of the unit. Functions are "OFF, AUTOMATIC & MANUAL".

OPERATION: The "OFF" position should be used while servicing the engine, since cranking cannot occur. It is also used to shut down the engine for any reason and to reset the control after a failure.

In "MANUAL" position, the engine will start and operate normally with safety shutdown features in effect.

"AUTO" position places the control directly across a remote automatic transfer contactor or other device which then controls the engine. There are two failure lights. The overcrank light indicates control has completed its crank cycle and unit hasn't started. The low oil/high water failure light indicates unit shut down from low oil pressure or high water temperature failure. The failure light will remain on until unit is manually reset. An alarm horn (Same Voltage as control) may also be used in conjunction with failure lights

RESET CONTROL AFTER FAILURE BY TURNING FUNCTION SWITCH TO "OFF".

Should unit fail to crank:

Check:
1. Battery
2. Fuse
3. Dirt in engine control contacts
4. Voltage at starter solenoid
5. Starter and solenoid for malfunction
6. Voltage on term. 10 (no voltage during cranking)

Unit will start, then fail:

Check:
1. Fuel and fuel supply filters
2. Ignition system - fuel or throttle solenoid
3. Carburetor adjustment or fuel injector pump - fuel solenoid valve
4. Engine control

Unit cranks but does not start:

Check:
1. Fuel and fuel supply lines for dirt or leaks
2. Ignition system, fuel or throttle solenoid
3. Carburetor adjustment, fuel injection pump, fuel solenoid valve
4. Voltage at ignition, throttle, fuel solenoid
5. Engine control - contacts may be dirty. Use contact cleaning tool, not abrasives.

Unit cranks continuously: (over 100 seconds)

Check
1. Time delay relay 7 - may be defective.

Unit starts but starter does not disengage:

Check:
1. All leads in crank disconnect circuit for continuity.
2. Voltage on term. 10 (battery voltage present after engine reaches 600 RPM)
   a) No voltage after engine starts indicates defective speed switch, if used for crank disconnect or no battery charging generator buildup.
   b) If voltage on terminal 10, check for defective relay 2 in control or open diode.

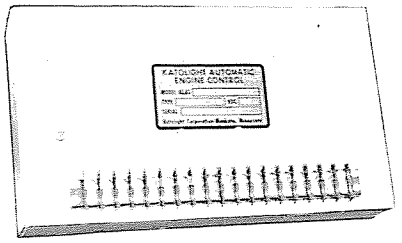

AUTOMATIC START CONTROLS

MODEL KLAS 60-D60

Components are carefully selected to provide maximum reliability and service life. The critical engine-crank circuits are equipped with highly dependable solid state time delay relays for consistent timing of crank and rest intervals.

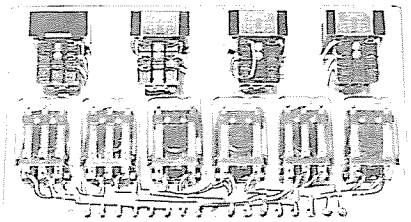

Mode of operation is selected by a three or four position switch as specified. In "MANUAL" position the control is energized immediately; in "AUTOMATIC", operation commences only when a remote set of contacts close, such as those of an automatic transfer switch; center position is "OFF". The four psoition rotary switch gives an additional "TEST" position in which the automatic control is out of the circuit and the engine may be started manually.

Current flows during cranking cycle thru closed contacts of relays No. 3, 4 and 5 to coil of crank relay No. 1. It closes and completes ignition circuit (terminal No. 3) and thru normally closed contacts of relay 2 to complete the starting circuit (terminal 5) and coil circuit of time relay No. 6. After an interval of about 7 seconds, No. 6 pulls in, its contacts energizing No. 4 relay, which breaks crank circuit of No. 1 relay, and energizes coil of No. 7. Relay No. 4 remains closed to supply current to relay no. 7 for a 7 second "rest" period until No. 7 opens to break lockout of No. 4. Current then flows again as in initial cranking cycle.

This sequence continues until relay No. 8 closes in about 90 seconds, pulling in relay No. 4. Overcrank light and alarm is then indicated and cranking stops.

If the engine starts, relay 2 is energized from term. 10 by voltage from battery charging generator or centrifugal speed switch, breaking starting solenoid current and continuity of relay N. 6, discontinuing cranking sequence relay. Relay No. 9 is energized and pulls in about 15 seconds to complete oil pressure failure circuit.

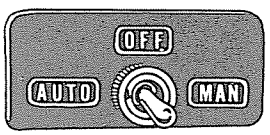

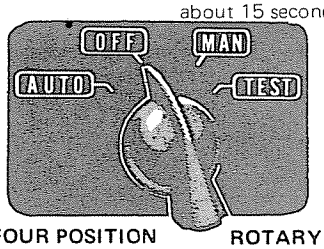

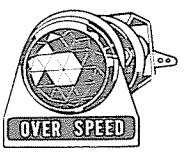

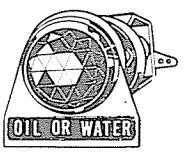



THREE POSITION SWITCH • FOUR POSITION ROTARY SWITCH • FAILURE INDICATING LIGHTS

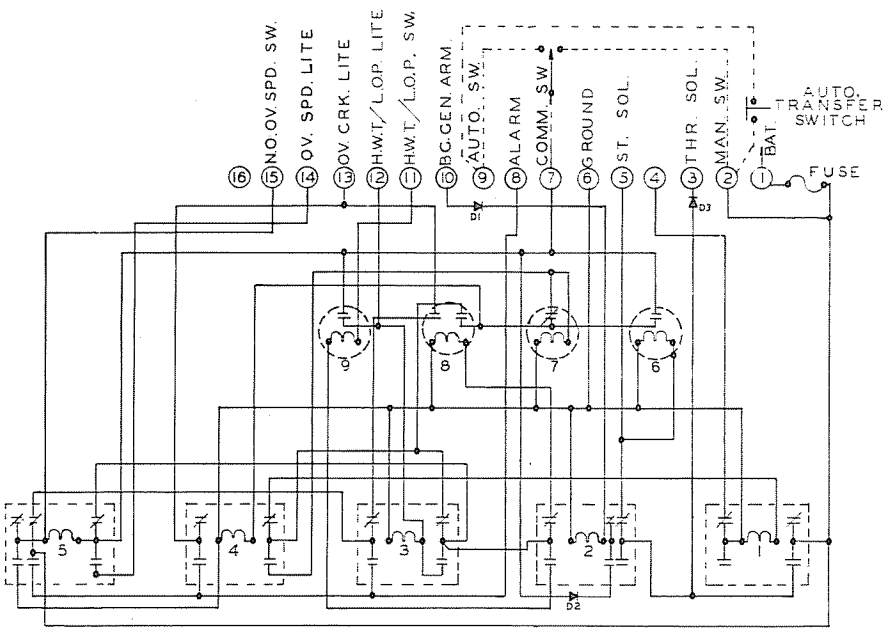

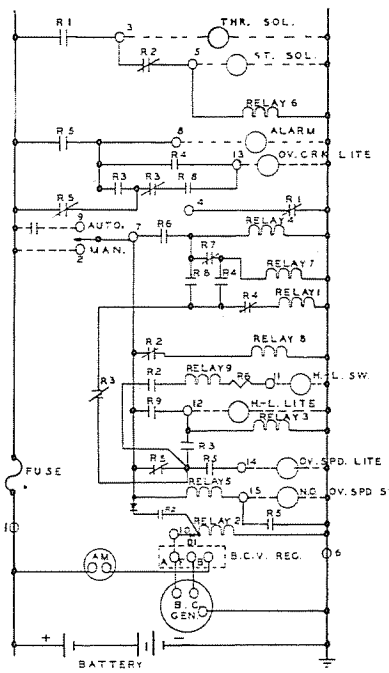

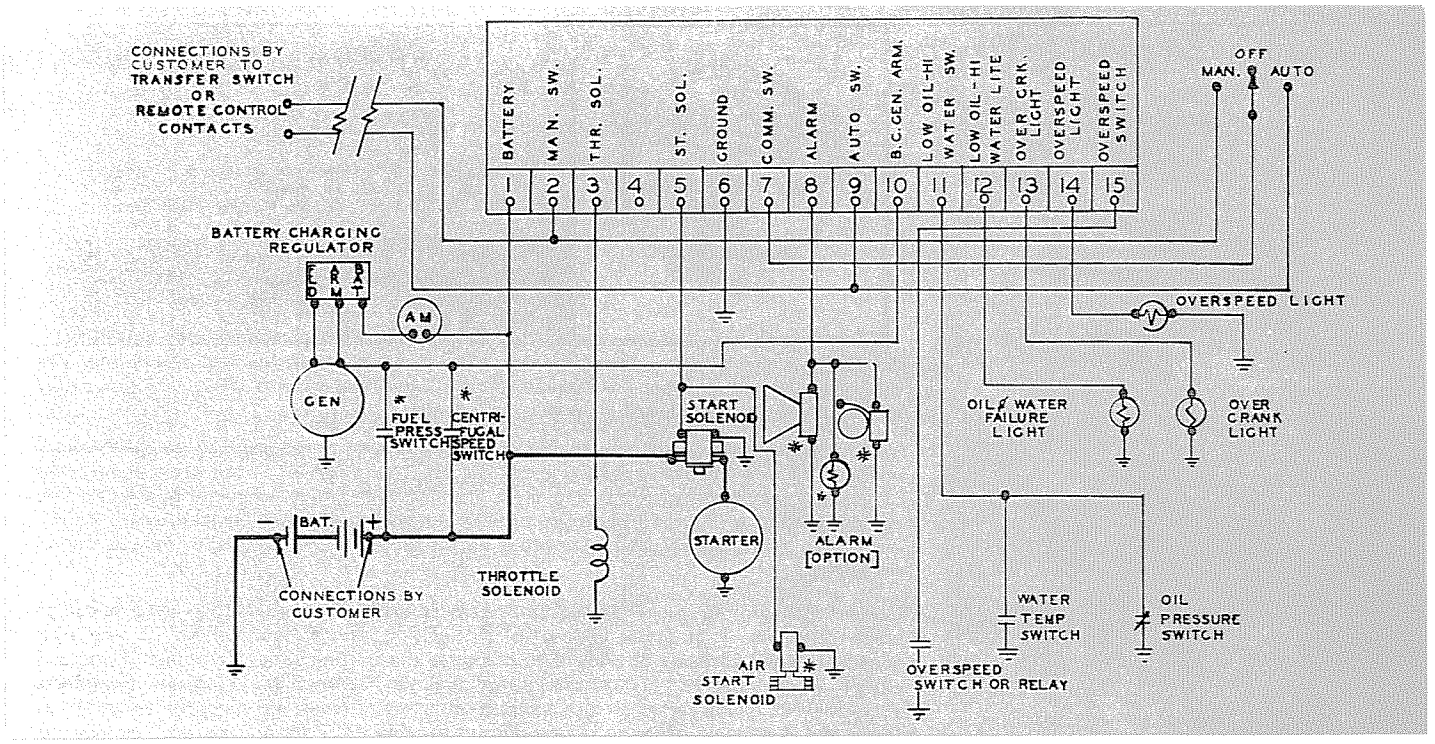

This instruction bulletin covers normal installation, operating and test procedures. The Klas 60 and Klas D60 controls provide basic engine control features. This control has 5 crank cycles of approximately 7 to 10 seconds cranking and 7 to 10 seconds rest for an approximate cranking time of 90 seconds. This is predetermined by the settings of rheostats on solid state relay 7, 8 and 9. These solid state relays give precise timing and are not effected by the fluctuations of ambient temperature and battery voltage. After the crank interval and the engine has attempted to start and has not started, the control will remain off and the alarm and overcrank light will be activated until reset. With normal engine start and operation safety shutdowns for high water temperature, low oil pressure and overspeed are connected, providing switches on the engine for these functions. Oil pressure failure occurs instantly except immediately following cranking period. During this period, there is a 10 to 15 second delay provided.

The Klas 60 and Klas D60 are designed for automatic operation in conjunction with an automatic transfer switch or load start switch. (It may be used on either standard battery ignition, magneto or diesel systems, dependent on accessories specified.)

INSTALLATION: With the Klas 60 or Klas D60 control, horizontal chassis mounting is preferred. If severe vibration is present, shock insulators may be required to prevent the relays from cycling when not energized. Mounting in an enclosure or panel free of dust and fumes will afford maximum contact life and reduce spark hazard.

Wire terminations should be made with solderless connectors. Use No. 14 flexible wire for short runs, heavier wire for remote locations.

CAUTION: Circuitry of this control is limited to 9 amps. Starter solenoids, audio alarms, etc., requiring more than 9 amps must be controlled by additional heavy duty relays or contactors operated by the control.

A 3 position switch, failure lights and decal are provided for control of the unit. Functions are "OFF, AUTOMATIC & MANUAL".

OPERATION: The "OFF" position should be used while service the engine, since cranking cannot occur. It is also used to shut down the engine for any reason and to reset the control after a failure.

In "MANUAL" position, the engine will start and operate normally with safety shutdown features in effect.

"AUTO" position places the control directly across a remote automatic transfer contactor or other device which then controls the engine. The failure lights will indicate either an overcrank (unit failed to start during cranking cycle) or a shutdown from overspeed, high water temperature or oil pressure failure. It will remain on until unit is manually reset. An Alarm horn (same voltage as control) may also be used in conjunction with failure lights.

RESET CONTROL AFTER FAILURE BY TURNING FUNCTION SWITCH TO "OFF".

Should unit fail to crank:

Check:
1. Battery
2. Fuse
3. Dirt in engine control contacts
4. Voltage at starter solenoid
5. Starter and solenoid for malfunction
6. Voltage on term. 10 (no voltage during cranking)

Unit will start, then fail:

Check:
1. Fuel and fuel supply filters
2. Ignition system - fuel or throttle solenoid
3. Carburetor adjustment or fuel injector pump - fuel solenoid valve
4. Engine control

Unit cranks but does not start:

Check:
1. Fuel and fuel supply lines for dirt or leaks
2. Ignition system, fuel or throttle solenoid
3. Carburetor adjustment, fuel injection pump, fuel solenoid valve
4. Voltage at ignition, throttle, fuel solenoid
5. Engine control - contacts may be dirty. Use contact cleaning tool, not abrasives.

Unit cranks continuously: (over 100 seconds)

Check 1. Time delay relay 8 - may be defective.

Unit starts but starter does not disengage:

Check:
1. All leads in crank disconnect circuit for continuity.
2. Voltage on term. 10 (battery voltage present after engine reaches 600 RPM)
   a) No voltage after engine starts indicates defective speed switch, if used for crank disconnect or no battery charging generator buildup.
   b) If voltage on terminal 10, check for defective relay 2 in control or open diode.

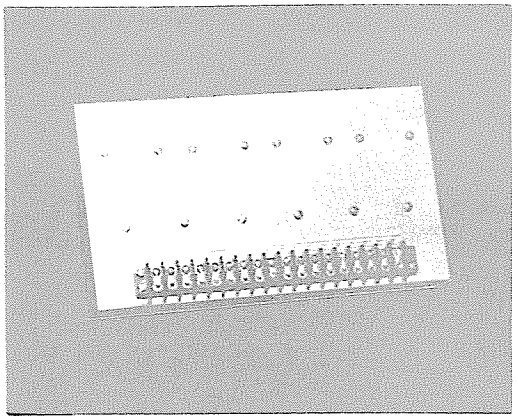

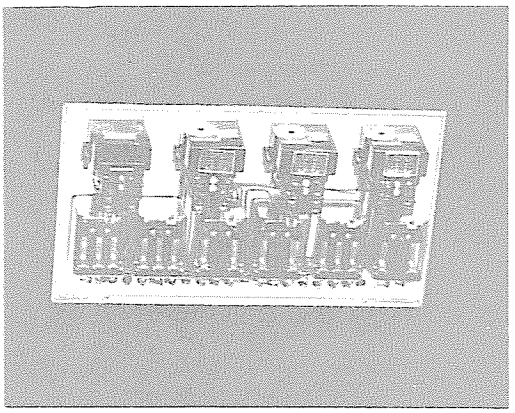

MADE IN U.S.A.
KATOLIGHT
MANKATO, MINN.
LIGHT & POWER PLANTS

AUTOMATIC START CONTROLS

MODEL KLAS 61-D61

Components are carefully selected to provide maximum reliability and service life. The critical engine-crank circuits are equipped with highly dependable sold state time delay relays for consistent timing of crank and rest intervals.

Mode of operation is selected by a three or four position switch as specified. In "MANUAL" position the control is energized immediately; in "AUTOMATIC", operation commences only when a remote set of contacts close, such as those of an automatic transfer switch; "OFF" position disables engine operation. The four position switch give an additional "TEST' position in which the automatic control is out of the circuit and engine may be started manually.

Current during cranking cycle flows thru normally closed contacts of relays 5, 6, 3 & 4 to energize relay 1 which closes completing the current path to the throttle solenoid (terminal 3) and thru (N.C.) contact relay 2 to starter solenoid (terminal 5) and to the coil of cranking timing relay (7).

If engine fails to start within 7 seconds, relay 7 closes energizing crank rest timing relay 8 and relay 4 to de-energize relay 1. After about 7 seconds, relay 8 opens to de-energize relay 4 and re-energize relays 1 and 7. If engine does not start arter 5 attempts (about 90 seconds), the contacts of overcrank relay 9 close, activating alarm and overcrank light and stopping crank cycle.

If engine starts, relay 2 is energized from terminal 10 by voltage from battery charging generator or from battery thru (N.O.) speed switch and relays 7, 9 and start solenoid are de-energized. After about 15 seconds of engine operation, relay 10 activates the low-oil pressure sensing circuits.

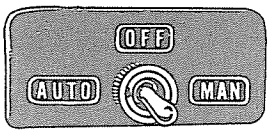

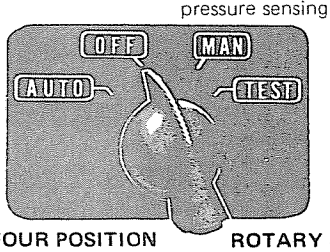

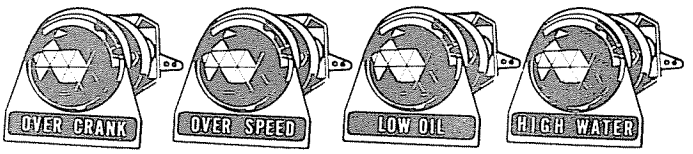

THREE POSITION SWITCH • FOUR POSITION ROTARY SWITCH • FAILURE INDICATING LIGHTS

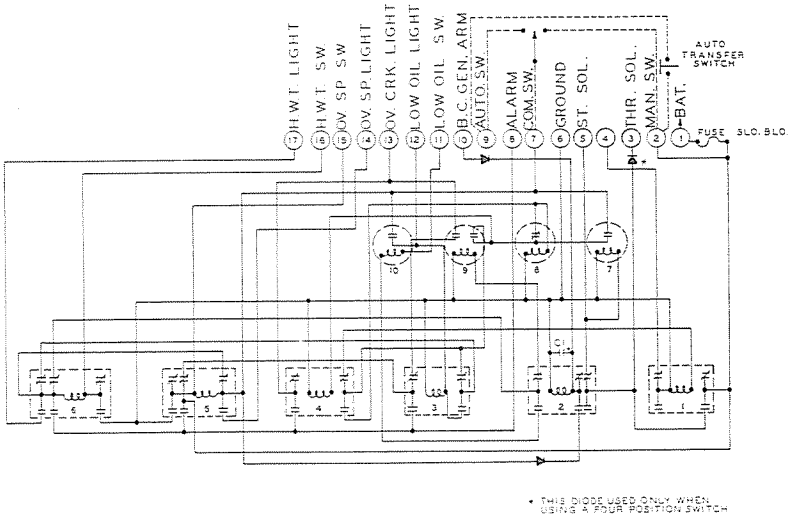

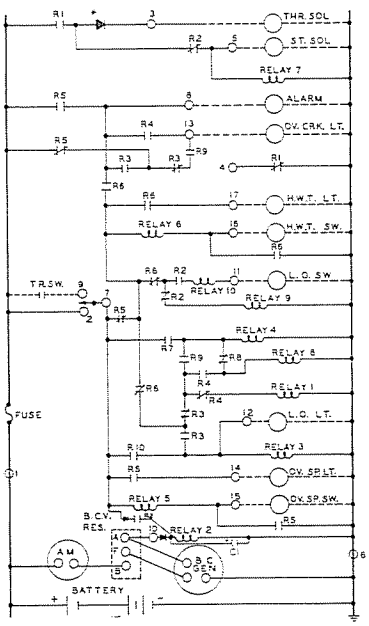

KATOLIGHT CORPORATION
MANKATO, MINNESOTA 56001

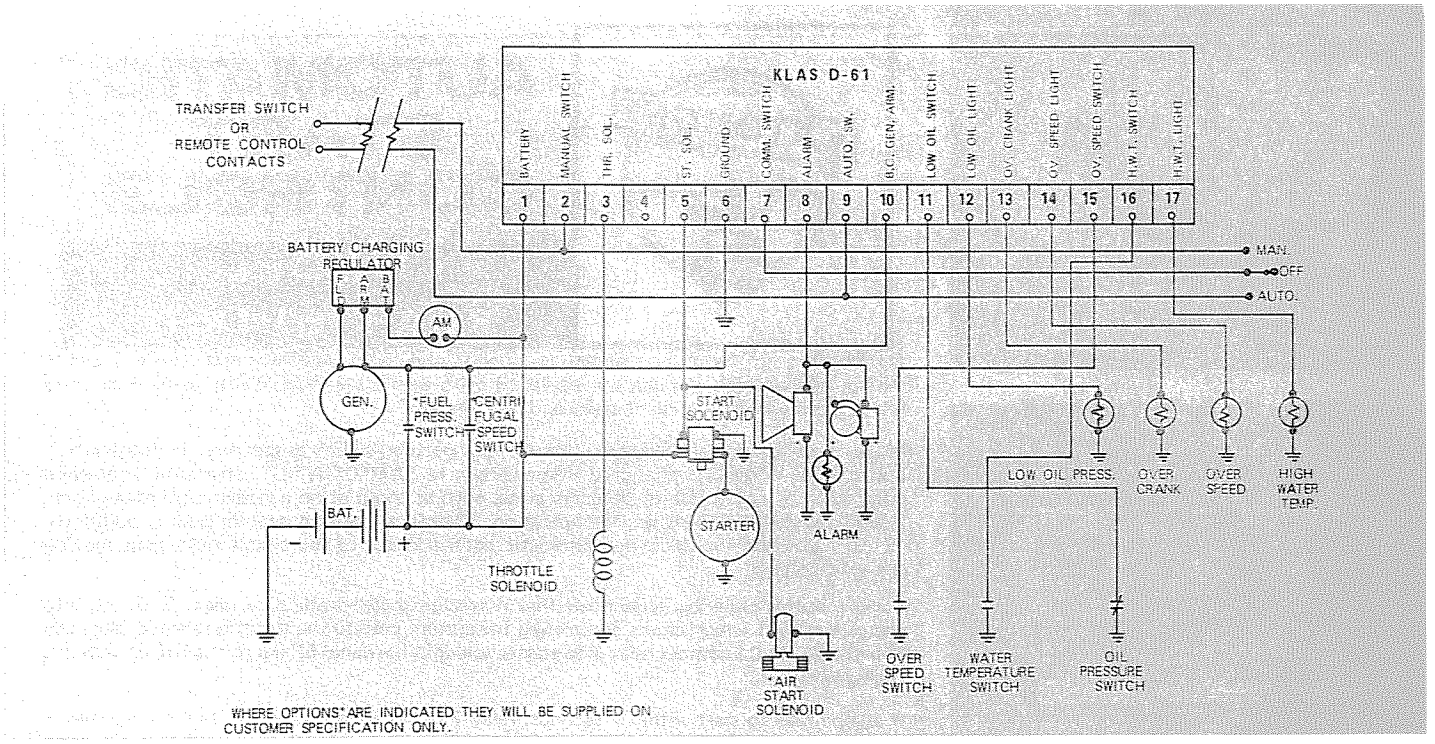

This bulletin covers normal installation, operating and test procedures. The Klas 61 and Klas D61 control provide basic engine control features. This control has 5 crank cycles of approximately 7 to 10 seconds cranking and 7 to 10 seconds rest for an approximate cranking time of 90 seconds. This is predetermined by the settings of rheostats on solid state relay 7, 8 and 9. These solid state relays give precise timing and are not affected by the fluctuations of ambient temperature and battery voltage. After The crank interval and the engine has attempted to start and has not started, the control will remain off and the alarm and overcrank light will be activated until reset. With normal engine start and operation safety shutdowns for high temperature, low oil pressure and overspeed are connected, providing switches on the engine for these functions. Oil pressure failure occurs instantly except immediately following cranking period. During this period, there is a 10 to 15 second delay provided.

The Klas 61 and Klas D61 are designed for automatic operation in conjunction with an automatic transfer switch or load start switch. (It may be used on either standard battery ignition, magneto or diesel systems, dependent on accessories specified.)

INSTALLATION: With the Klas 61 and Klas D61 controls, horizontal chassis mounting is preferred. If severe vibration is present shock insulators may be required to prevent the relays from cycling when not energized. Mounting in an enclosure or panel free of dust and fumes will afford maximum contact life and reduce spark hazard.

Wire terminations should be made with solderless connectors. Use No. 14 flexiable wire for short runs, heavier wire for remote locations.

CAUSTION: Circuitry of this control is limited to 9 amps. Starter colenoids, audio alarms, etc., requiring more than 9 amps must be controlled by additional heavy duty relays or contactor operated by the control.

A 3-position switch, failure lights and decal are provided for control of the unit. Functions are "OFF, AUTOMATIC & MANUAL".

OPERATION: The "OFF" position should be used while servicing the engine, since cranking cannot occur. It is also used to shut down the engine for any reason and to reset the control after a failure.

In "MANUAL" position, the engine will start and operate normally with safety shutdown features in effect.

"AUTO" position places the control directly across a remote automatic transfer contactor or other device which then controls the engine. The failure lights will indicate either an overcrank (unit failed to start during cranking cycle) or a shutdown from overspeed, high water or oil pressure failure. It will remain on until unit is manually reset. An alarm horn (same voltage as control) may also be used in conjunction with failure lights.

RESET CONTROL AFTER FAILURE BY TURNING FUNCTION SWITCH TO "OFF".

Should unit fail to crank:
Check:
1. Battery
2. Fuse
3. Dirt in engine control contacts
4. Voltage at starter solenoid
5. Starter and solenoid for malfunction
6. Voltage on term. 10 (no voltage during cranking)

Unit will start, then fail:
Check:
1. Fuel and fuel supply filters
2. Ignition system - fuel or throttle solenoid
3. Carburetor adjustment or fuel injector pump - fuel solenoid valve
4. Engine control

Unit cranks but does not start:
Check:
1. Fuel and fuel supply lines for dirt or leaks
2. Ignition system, fuel or throttle solenoid
3. Carburetor adjustment, fuel injection pump, fuel solenoid valve
4. Voltage at ignition, throttle, fuel solenoid
5. Engine control - contacts may be dirty. Use contact cleaning tool, not abrasives.

Unit cranks continuously: (over 100 seconds)
Check 1. Time delay relay 9 - may be defective.

Unit starts but starter does not disengage:
Check:
1. All leads in crank disconnect circuit for continuity.
2. Voltage on term. 10 (battery voltage present after engine reaches 600 RPM)
   a) No voltage after engine starts indicates defective speed switch, if used for crank disconnect or no battery charging generator buildup.
   b) If voltage on terminal 10, check for defective relay 2 in control or open diode.

KATOLIGHT

AUTOMATIC START CONTROLS

MODELS:
KLAS 103
KLAS 110

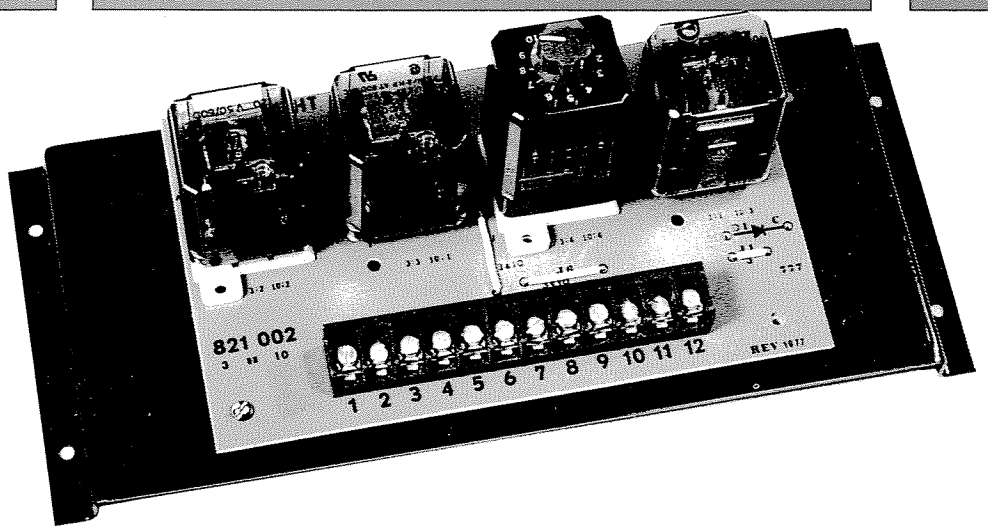

Katolight Automatic Start controls will automatically start and stop diesel, gasoline, natural gas, or LPG engine-generator sets under the control of an automatic transfer switch or load start contact closed to run. These controls are manufactured to high quality control standards to insure the satisfaction of Katolight's customers.

The Katolight KLAS 103 and KLAS 110 are non-cyclic automatic engine start controls that provide visual indication (light) and automatic engine shutdown due to an overcrank condition. An optional audible alarm indication can also be provided.

FEATURES

- Consistent operation from -20 to +60 degrees Centigrade.
- Reliable Katolight solid-state design timing relays.
- Heavy duty 10 amp relays with gold flashed contacts for reliable operation at low D.C. voltage.
- Compatibility with virtually all engines in today's market place.
- Ease of installation, simple bracket mounting.
- Barrier screw type terminals, U.L. & C.S.A. Listed, with approved means for solderless connection of conductors.
- Non-cyclic or one-shot crank featuring an adjustable one (1) to one-hundred (100) second engine cranking circuit.
- Plug-in type solid state timers with sockets and retaining clips.
- External alarm circuit for remote failure indication
- Available from stock.
- Three position "Auto, Off, Manual" switch. In "Manual" position, the control is energized immediately; in "Automatic," operation commences only when a remote set of contacts close, such as those of an automatic transfer switch; the center position is "Off." (The "Off" position is also reset. The control must be reset after any failure.)
- Printed circuits are extra heavy construction of .093 board and .004 copper.
- Available for 12 or 24 volt battery systems; negative ground.
- Positive lockout circuits prohibit recranking while engine is running.
- Reverse polarity protection.

Printed in U.S.A.
Form KLAS 103-110-79

DIMENSIONS & WIRING DIAGRAMS

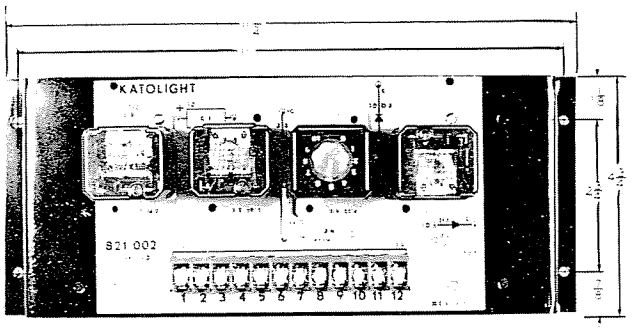

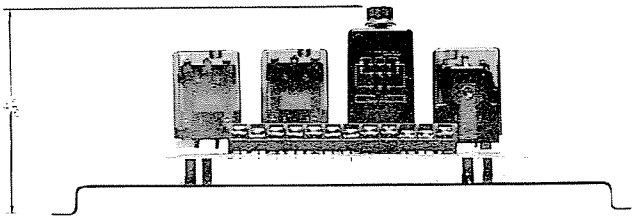

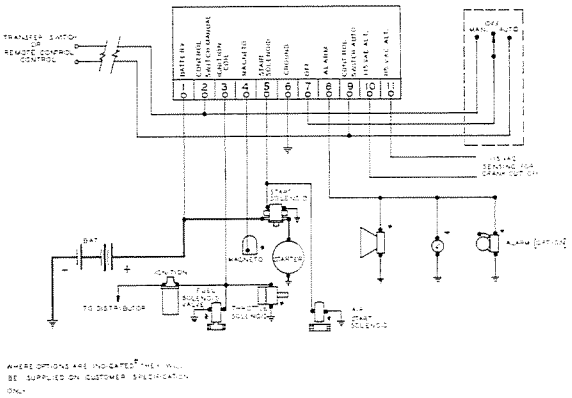

MODEL 103

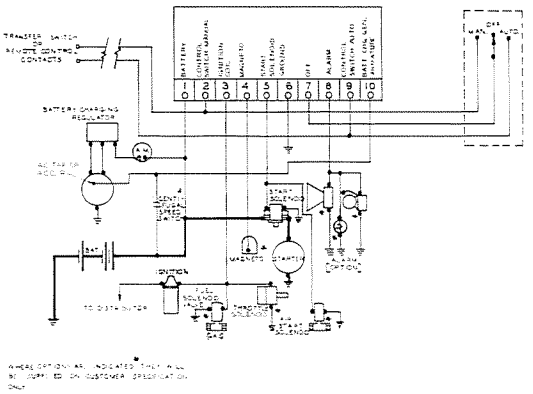

MODEL 110

MODEL	ENGINE MAKE COMPATIBLE WITH	CRANKING MODE	OPERATING CONTROL MODE	BATTERY VOLTAGE	CRANK DISCONNECT
KLAS 103	Allis-Chalmers Deutz Caterpillar Ford Detroit Diesel Cummins White/Hercules Perkins Waukesha Lister International Harvestor Wisconsin and others	Continuous Adjustable	* Energized to run	12 or 24	120 VAC
KLAS 110		Continuous Adjustable	Energized to run	12 or 24	12 or 24 VDC

* Katolight Automatic Start controls are "Energized to Run" as standard, but "Energized to Stop" option is available.

ACCESSORIES

- Dust Cover

- Four position "Auto, Off, Manual, Test" rotary engine control switch. Same three functions as the three-position switch listed under Features on the front of this sheet except that "Test" position is added. The "Test" position provides that the automatic control is out of the circuit so that the engine may be started manually.

- Audible alarm, horn or bell - available as an option, in addition to the standard visual alarm light.

ORDER PROCESSING
When ordering specify:

KLAS - Model number
- battery voltage
- engine manufacturer
- enclosure number (dust cover optional)
- control switch (3 pos. std.) or (4 pos. optional)

KATOLIGHT CORPORATION
3201 Third Avenue
P.O. Box 3229
Mankato, Minnesota 56001
Phone: (507) 625-7973
Telex: 29-0787

Printed in U.S.A.

For more information contact your nearest Representative, Distributor, or Dealer below.

KATOLIGHT

AUTOMATIC START CONTROLS
TECHNICAL BULLETIN

MODELS:
KLAS 103
KLAS 110

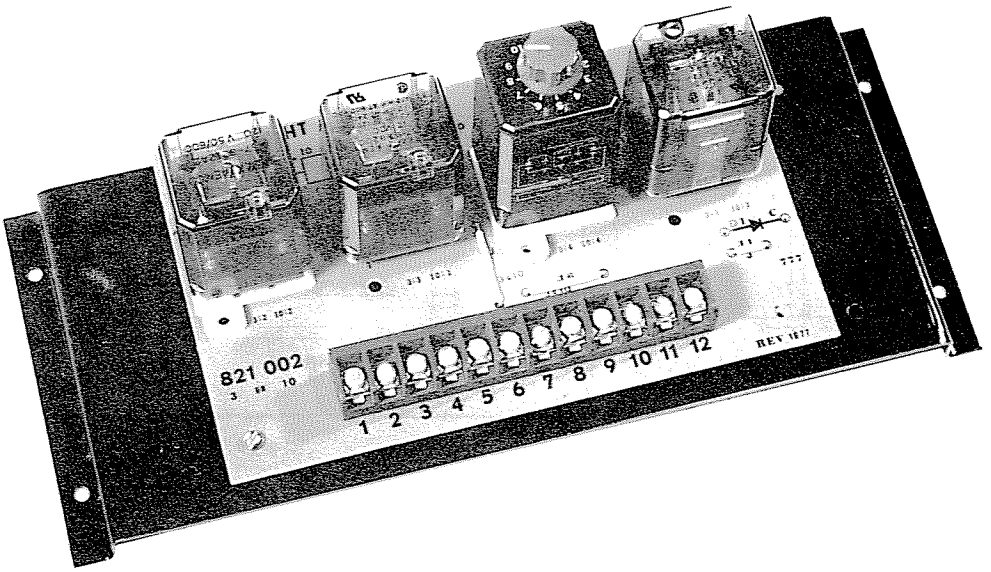

Katolight Automatic Start controls will automatically start and stop diesel, gasoline, natural gas or LPG engine-generator sets from a remote contact located in automatic transfer switch or load start, contact closed to run. These controls are manufactured to highest quality control standards to insure reliability.

The Katolight KLAS 103 and KLAS 110 are non-cyclic automatic engine start controls that provide visual indication (light) and automatic engine shutdown due to an overcrank condition. An optional audible alarm can also be provided.

FEATURES

- Consistent operation from -20 to +60 degrees Centigrade.
- Reliable Katolight solid-state design timing relays.
- Heavy duty 10 amp relays with gold flashed contacts for reliable operation at low D.C. voltage.
- Compatibility with virtually all engines in today's market place.
- Ease of installation, simple bracket mounting.
- Barrier screw type terminals, U.L. & C.S.A. Listed, with approved means for solderless connection of conductors.
- Non-cyclic or one-shot crank featuring an adjustable one (1) to one-hundred (100) second engine cranking circuit.
- Plug-in type solid state timers with sockets and retaining clips.
- External alarm circuit for remote failure indication
- Available from stock.
- Three position "Auto, Off, Manual" switch. In "Manual" position, the control is energized immediately; in "Automatic," operation commences only when a remote set of contacts close, such as those of an automatic transfer switch; the center position is "Off." (The "Off" position is also reset. The control must be reset after any failure.)
- Printed circuits are extra heavy construction of .093 board and .004 copper.
- Available for 12 or 24 volt battery systems; negative ground.
- Positive lockout circuits prohibit recranking while engine is running.
- Reverse polarity protection.

MODEL	CRANKING MODE	OPERATING CONTROL MODE	BATTERY VOLTAGE	CRANK DISCONNECT
KLAS 103	Continuous Adjustable	* Energized to run	12 or 24	120 VAC
KLAS 110	Continuous Adjustable	Energized to run	12 or 24	12 or 24 VDC

* Katolight Automatic Start controls are "Energized to Run" as standard, but "Energized to Stop" option is available.

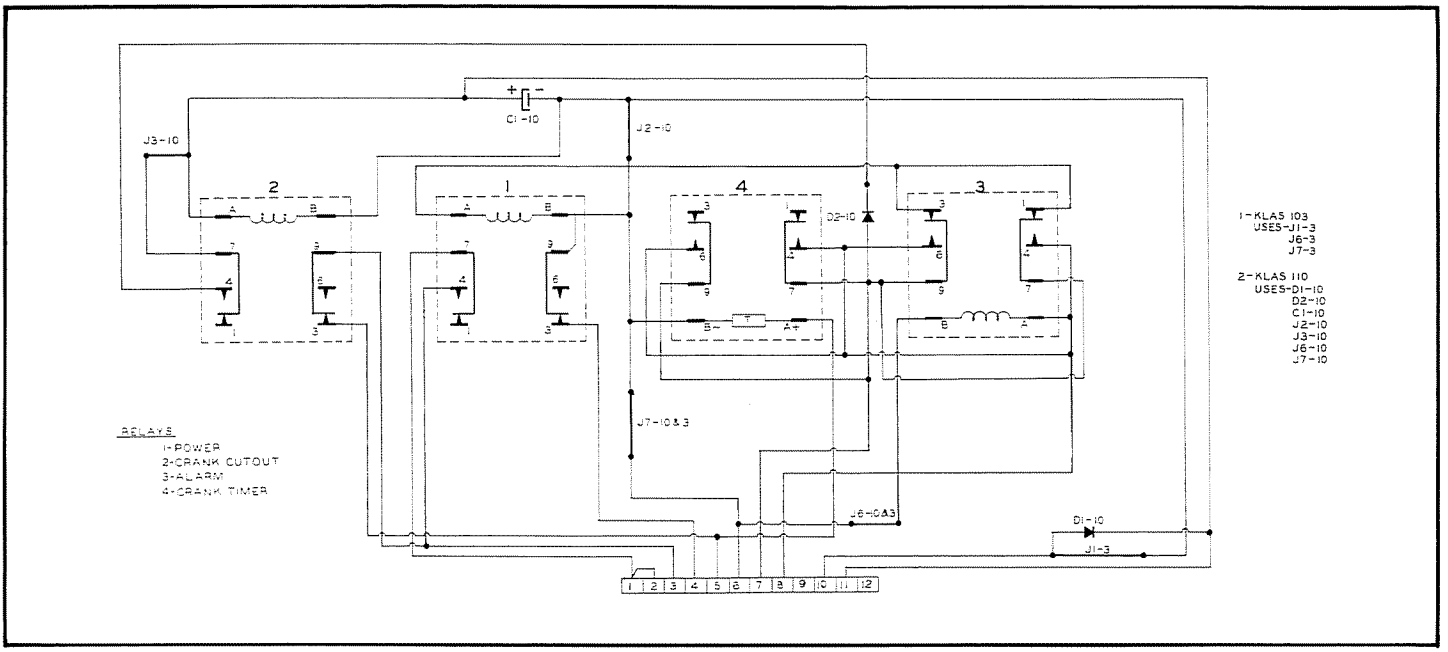

CONTROL OPERATION

Current during cranking flows from Terminal No. 7 through normally closed Contact 3-9 and 1-7 Relay 3, to energize Relay 1. Relay 1 breaks normally closed Contact 3-9 magneto ground circuit to Terminal No. 4 (if used) also closes normally open Contact 4-7 energizing Terminal No. 3 (ignition coil or throttle solenoid on Diesel units) and through normally closed contact 3-9 Relay 2 energizes Terminal No. 5 (start solenoid) and crank timer, Relay 4.

If engine starts, Relay 2 is energized from either a 115 volt AC source on Terminals No. 10 and No. 11 on KLAS 103, or a positive DC voltage on Terminal No. 10 on KLAS 110. This positive DC voltage for Terminal No. 10 on KLAS 110 can come from the AC or ACC. tap on battery charging alternator, or speed switch or pressure switch. Relay 2 breaks normally closed Contact 3-9 removing power to Terminal No. 5 (disconnecting start solenoid) and crank timer, Relay 4. On KLAS 110, Relay 2, locks itself in through normally open Contact 4-7 to prevent starter re-engaging from loss of signal on Terminal No. 10.

If engine doesn't start, timer Relay 4 will time out (normally set at 45 seconds). Relay 4 closes normally open Contact 4-7, energizes Relay 3. Relay 3 will open normally closed Contact 3-9, de-energize Relay 1 (to stop cranking) and close normally open Contact 4-7 energizing Terminal No. 8 and latch itself. Terminal No. 8 energizes failure light.

To reset control after failure, turn engine control switch to "off" position.

SELECTOR SWITCH MODE OF OPERATION

"AUTO" Places the control under control of remote start contact. This contact will control the engine—close to start —open to stop.

"OFF" Shuts engine down and/or resets control after failure. **CAUTION:** Always put switch in "off" position when servicing engine.

"MAN" Starts engine and operates with all safety shutdown features in operation.

"TEST" Additional position on 4 position switch. Allows you to start engine by bypassing engine control completely. **CAUTION:** No safety shutdown features will function in "test" position.

"FAILURE" Failure indicating light. Engine failed to start. Engine cranked for length of time set on adjustable crank timer but engine did not start.



3 POSITION SWITCH

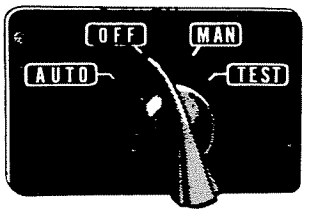

4 POSITION ROTARY SWITCH



FAILURE INDICATING LIGHT

DIMENSIONS & WIRING DIAGRAMS

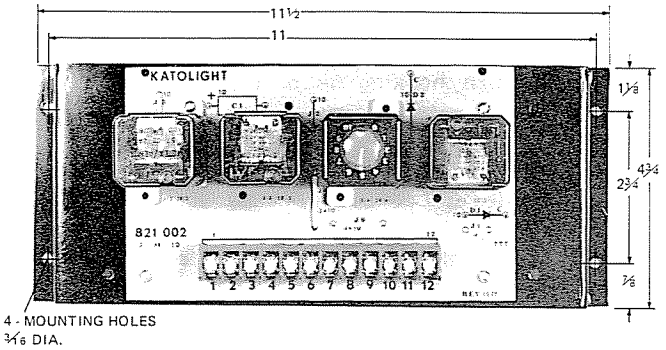

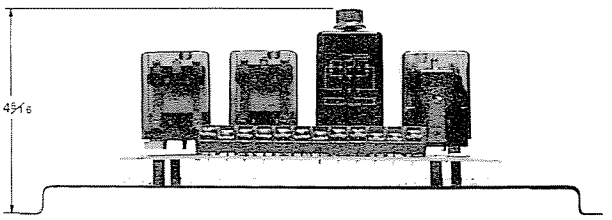

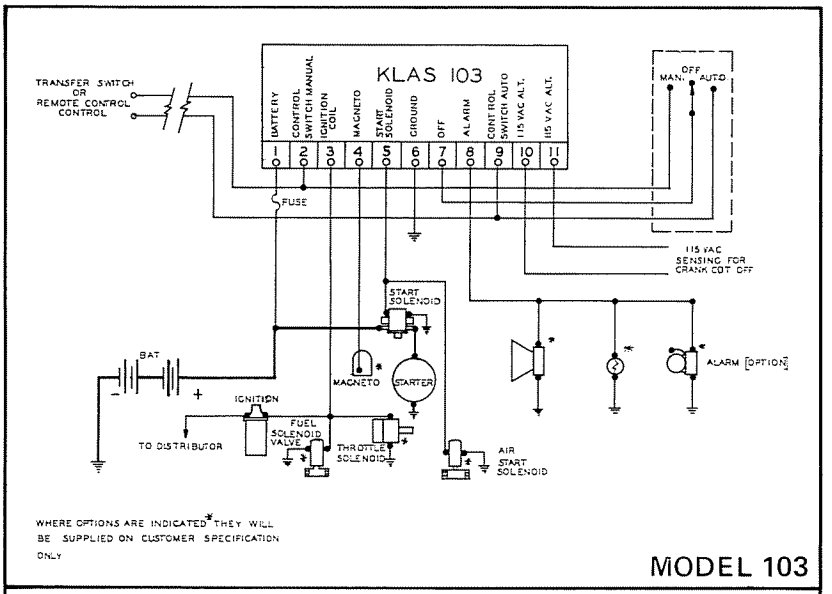

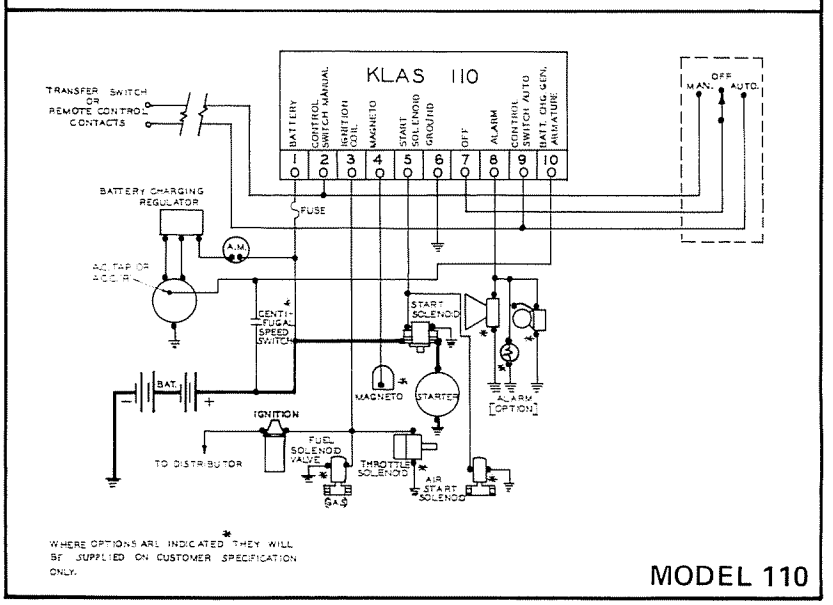

ACCESSORIES

Dust cover

Audible alarm, horn, or bell—available as an option, in addition to the standard visual alarm light.

ORDER PROCESSING
When ordering specify:

KLAS - Model number
- battery voltage
- engine manufacturer
- enclosure number (dust cover optional)
- control switch (3 pos. std.) or (4 pos. optional)

TROUBLE SHOOTING CHART

SYMPTOM	CHECK FOR	CAUSE
Fail to crank	Blown fuse	Shorted leads when hooking up or overloaded circuits replace with SFE9.
	Low battery	May have defective battery or charger may not be functioning. Could have corroded or loose battery connection.
	Voltage at start solenoid	If voltage is present at starter, could have defective starter or solenoid. If no voltage at starter, could have open leads or you may have a signal already present at Terminal No. 10 to disconnnect starter.
	Voltage on Terminal No. 10	There should be no voltage on Terminal No. 10 during cranking. If present, check signal source.
Unit cranks, does not start	Fuel supply	May have empty tank — bleed fuel supply line. Gas units may have wrong pressure, 4-6 oz. on naturally aspirated units. Turbo charged units require higher pressure.
	Voltage on Terminal No. 3	If present, may have defective fuel valve or ignition system or loose connection. If no voltage present, may have dirty Contact 4-7 Relay 1 in engine control.
Unit will start then fail	Loss of fuel	Tank may be empty — fuel line may be broken or loose.
	Failure light	May have gone into overcrank and shutdown. If this happened, may not have received crank disconnect signal on Terminal No. 10.
	Loose or open connections	May have lost power to control or ignition system.
Unit starts, but starter does not disengage	Voltage on Terminal No. 10	Voltage must be present after unit starts to operate crank disconnect relay in control. No voltage after engine starts indicates defective signal source, speed switch, pressure switch, battery charging alternator, etc. Voltage present on Terminal No. 10 would indicate defective Relay 2 or Diode D1 or Capacitor C1.
	Malfunctioning starter	Starter could be hanging up or pilot solenoid not disengaging.

KATOLIGHT CORPORATION
3201 Third Avenue
P.O. Box 3229
Mankato, Minnesota 56001
Phone: (507) 625-7973
Telex: 29-0787

Printed in U.S.A.
KLAS TEC 103-110-81

For more information contact your nearest Representative, Distributor, or Dealer below.

KATOLIGHT

AUTOMATIC START CONTROLS

MODELS:
KLAS 120
KLAS 130

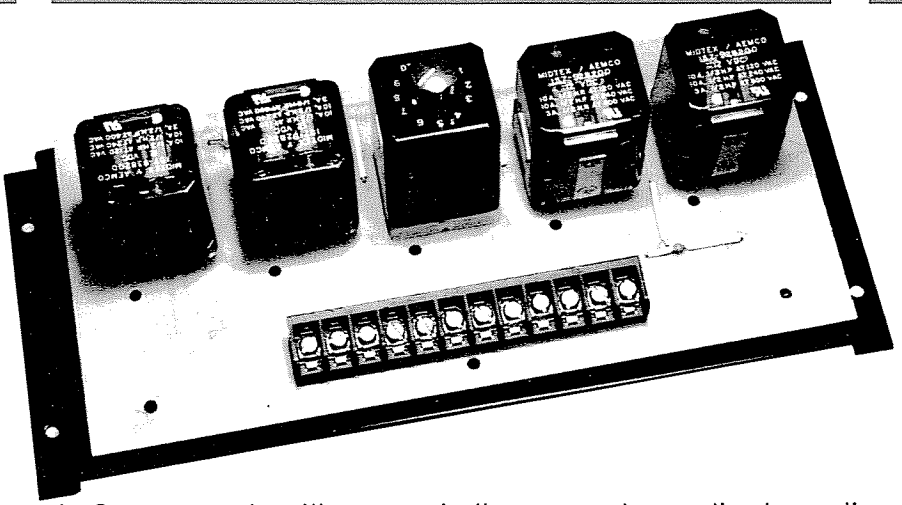

Katolight Automatic Start controls will automatically start and stop diesel, gasoline, natural gas, or LPG engine-generator sets under the control of an automatic transfer switch or load start contact closed to run. These controls are manufactured to high quality control standards to insure the satisfaction of Katolight's customers.

The Katolight KLAS 120 and KLAS 130 are non-cyclic automatic start controls . The KLAS 120 provides automatic engine shutdown due to overcrank, low oil pressure, and high water temperature conditions. The KLAS 130 provides automatic engine shutdown due to overcrank, low oil pressure, high water temperature, and overspeed conditions. On both models all the failures are visually indicated by the light, and an audible indication can also be provided as an option.

FEATURES

- Consistent operation for -20 to +60 degrees Centigrade.
- Reliable Katolight solid-state design timing relays.
- Heavy duty 10 amp relays with gold flashed contacts for reliable operation at low D.C. voltage.
- Compatibility with virtually all engines in today's market place.
- Ease of installation, simple bracket mounting.
- Barrier screw type terminals U.L. & C.S.A. Listed, with approved means for solderless connection of conductors.
- Non-cyclic or one-shot crank featuring an adjustable one (1) to one-hundred (100) second engine cranking circuit.
- Plug-in type solid-state timers with sockets and retaining clips.
- External alarm circuit for remote failure indication.
- Available from stock.
- Three position "Auto, Off, Manual" switch. In "Manual" position, the control is energized immediately; in "Automatic," operation commences only when a remote set of contacts close, such as those of an automatic transfer switch. The center position is "Off". (The "Off" position is also reset. after any failure.)
- Printed circuits are extra heavy construction of .093 board and .004 copper.
- Available for 12 and 24 volt battery systems; negative ground.
- Positive lock-out circuits prohibit recranking while engine is running.
- Reverse polarity protection.

Printed in U.S.A.
Form KLAS 120-130-79

DIMENSIONS & WIRING DIAGRAMS

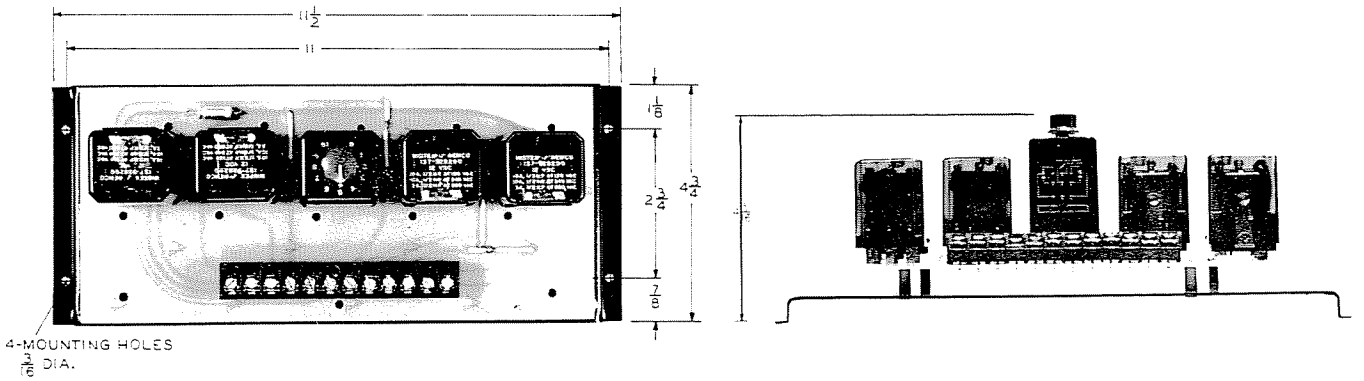

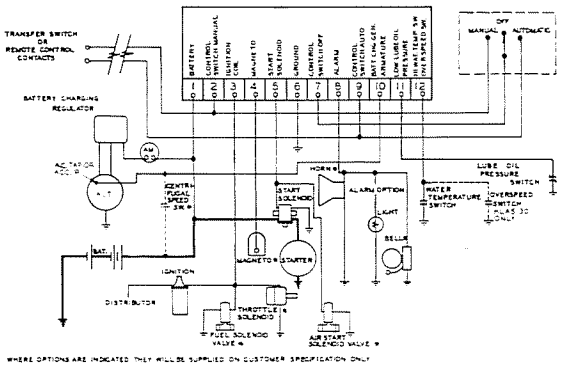

MODEL	ENGINE MAKE COMPATIBLE WITH	CRANKING MODE	OPERATING CONTROL MODE	BATTERY VOLTAGE	CRANK DISCONNECT
KLAS 120	Allis-Chalmers Deutz Caterpillar Ford Detroit Diesel Cummins White/Hercules Perkins Waukesha Lister International Harvestor Wisconsin and others	Non-cyclic	* Energized to run	12 or 24	12 or 24 VDC
KLAS 130		Non-cyclic	Energized to run	12 or 24	12 or 24 VDC

* Katolight Automatic Start controls are "Energized to Run" as standard, but "Energized to Stop" option is available.

ACCESSORIES

- Dust cover
- Four position "Auto, Off, Manual, Test" rotary engine control switch. Same three functions as the three-position switch listed under Features on the front of this sheet except that "Test" position is added. The "Test" position provides that the automatic control is out of the circuit so that the engine may be started manually.
- Audible alarm, horn, or bell - available as an option, in addition to the standard visual alarm light.

ORDER PROCESSING
When ordering specify:
KLAS - model number
- battery voltage
- engine manufacturer
- enclosure number (dust cover optional)
- control switch (3 pos. std.) or (4 pos. optional)

KATOLIGHT CORPORATION
3201 Third Avenue
P.O. Box 3229
Mankato, Minnesota 56001
Phone: (507) 625-7973
Telex: 29-0787

Printed in U.S.A.

For more information contact your nearest Representative, Distributor, or Dealer below.

KATOLIGHT

AUTOMATIC START CONTROLS TECHNICAL BULLETIN

MODELS: KLAS 120 KLAS 130

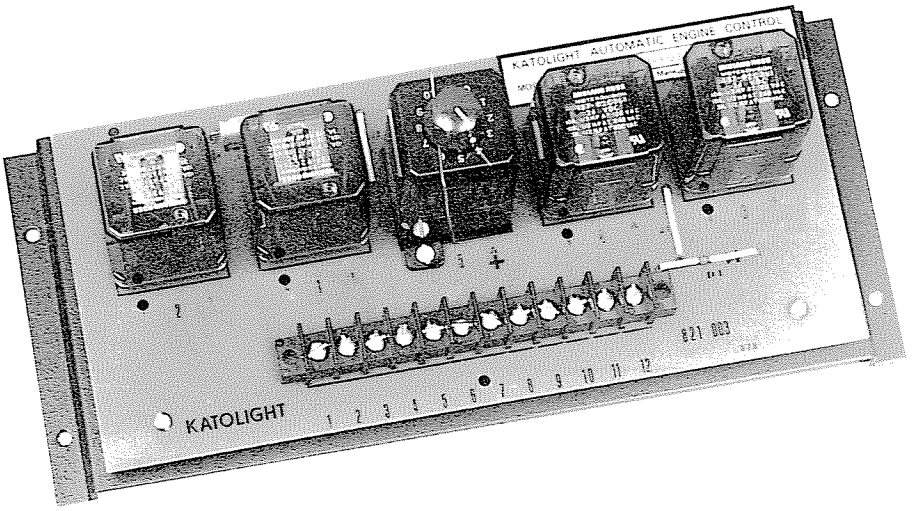

Katolight Automatic Start controls will automatically start and stop diesel, gasoline, natural gas, or LPG engine-generator sets under the control of an automatic transfer switch or load start contact closed to run. These controls are manufactured to highest quality control standards to insure reliability.

The Katolight KLAS 120 and KLAS 130 are non-cyclic automatic start controls. The KLAS 120 provides automatic engine shutdown due to overcrank, low oil pressure, and high water temperature conditions. The KLAS 130 provides automatic engine shutdown due to overcrank, low oil pressure, high water temperature, and overspeed conditions. On both models all the failures are visually indicated by the light. An audible alarm can also be provided as an option.

FEATURES

- Consistent operation for -20 to +60 degrees Centigrade.
- Reliable Katolight solid-state design timing relays.
- Heavy duty 10 amp relays with gold flashed contacts for reliable operation at low D.C. voltage.
- Compatibility with virtually all engines in today's market place.
- Ease of installation, simple bracket mounting.
- Barrier screw type terminals U.L. & C.S.A. Listed, with approved means for solderless connection of conductors.
- Non-cyclic or one-shot crank featuring an adjustable one (1) to one-hundred (100) second engine cranking circuit.
- Plug-in type solid-state timers with sockets and retaining clips.
- External alarm circuit for remote failure indication.
- Available from stock.
- Three position "Auto, Off, Manual" switch. In "Manual" position, the control is energized immediately; in "Automatic," operation commences only when a remote set of contacts close, such as those of an automatic transfer switch. The center position is "Off". (The "Off" position is also reset. after any failure.)
- Printed circuits are extra heavy construction of .093 board and .004 copper.
- Available for 12 and 24 volt battery systems; negative ground.
- Positive lock-out circuits prohibit recranking while engine is running.
- Reverse polarity protection.

MODEL	CRANKING MODE	OPERATING CONTROL MODE	BATTERY VOLTAGE	CRANK DISCONNECT
KLAS 120	Non-cyclic	* Energized to run	12 or 24	12 or 24 VDC
KLAS 130	Non-cyclic	Energized to run	12 or 24	12 or 24 VDC

* Katolight Automatic Start controls are "Energized to Run" as standard, but "Energized to Stop" option is available.

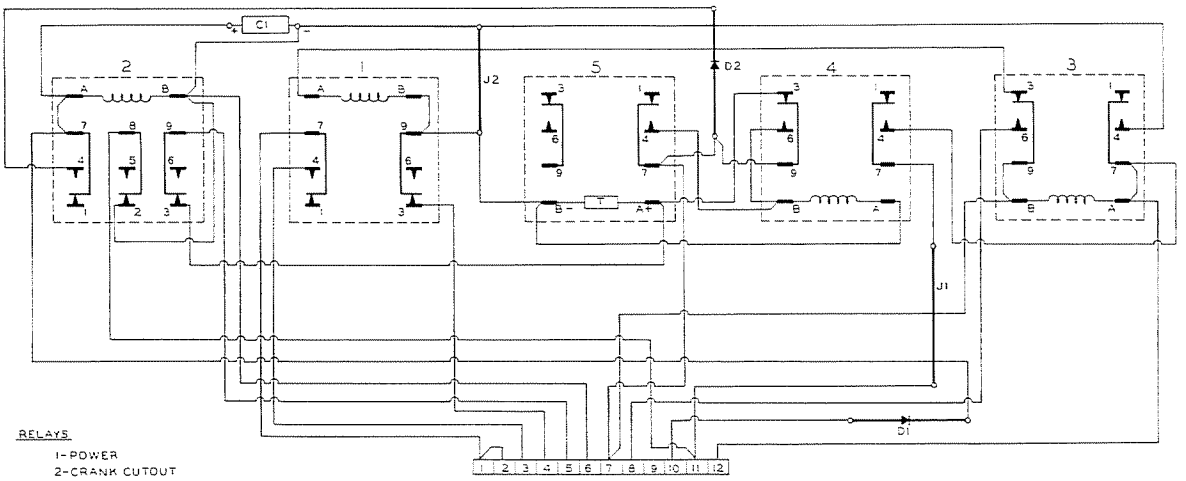

CONTROL OPERATION

Current during cranking flows from Terminal No. 7 through normally closed Contact 3-9 Relay 3, to energize Relay 1. Relay 1 breaks normally closed Contact 3-9 magneto ground circuit to Terminal No. 4 (if used) also closes normally open Contact 4-7 energizing Terminal No. 3 (ignition coil or throttle solenoid on Diesel units). From Terminal No. 7 through normally closed Contact 3-9 Relay 4 energizes crank timer, Relay 5 and through normally closed Contact 3-9 Relay 2 energizing Terminal No. 5 (start solenoid).

If engine starts, Relay 2 is energized by a positive voltage on Terminals No. 10 through Diode D1. This positive DC voltage for Terminal No. 10 can come from the AC or ACC. tap on battery charging alternator, or speed switch or pressure switch. Relay 2 opens normally closed Contact 3-9 removing power to Terminal No. 5 (disconnecting start solenoid), opens normally closed Contact 5-8 preventing overcrank fail. Relay 2, locks itself in through normally open Contact 4-7 to prevent starter re-engaging from loss of signal on Terminal No. 10. Timer T-5 closes normally open Contact 4-7 (after 45 seconds) energizing Relay 4 activating low oil shutdown circuit.

If engine doesn't start, timer T-5 (normally set at 45 seconds) will close normally open Contact 4-7, energizes Relay 4. Relay 4 will open normally closed Contact 3-9, de-energize Terminal No. 5 (start solenoid) close normally open Contact 6-9 locking itself in and close normally open Contact 4-7 energizing Relay 3. Relay 3 opens normally closed contact 3-9 de-energizing Relay 1 closes normally open Contact 6-9 energizing Terminal No. 8 (alarm light) closes normally open Contact 4-7 locking itself in failure mode.

To reset control after failure, turn engine control switch to "off" position.

SELECTOR SWITCH MODE OF OPERATION

"AUTO" Places the control under control of remote start contact. This contact will control the engine—close to start —open to stop.

"OFF" Shuts engine down and/or resets control after failure. **CAUTION:** Always put in "off" position when servicing engine.

"MAN" Starts engine and operates with all safety shutdown features in operation.

"TEST" Additional position on 4 position switch. Allows you to start engine by bypassing engine control completely. **CAUTION:** No safety shutdown features will function in "test" position.

"FAILURE" Failure indicating light. Engine failed to start. Engine cranked for length of time set on adjustable crank timer but engine did not start. Engine started then failed from low oil pressure or overspeed on KLAS 130.

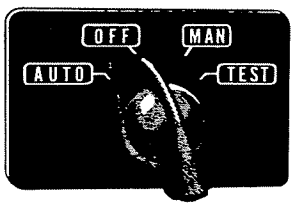

4 POSITION ROTARY SWITCH

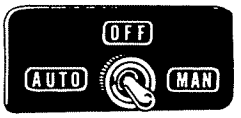

3 POSITION SWITCH



FAILURE INDICATING LIGHT

DIMENSIONS & WIRING DIAGRAMS

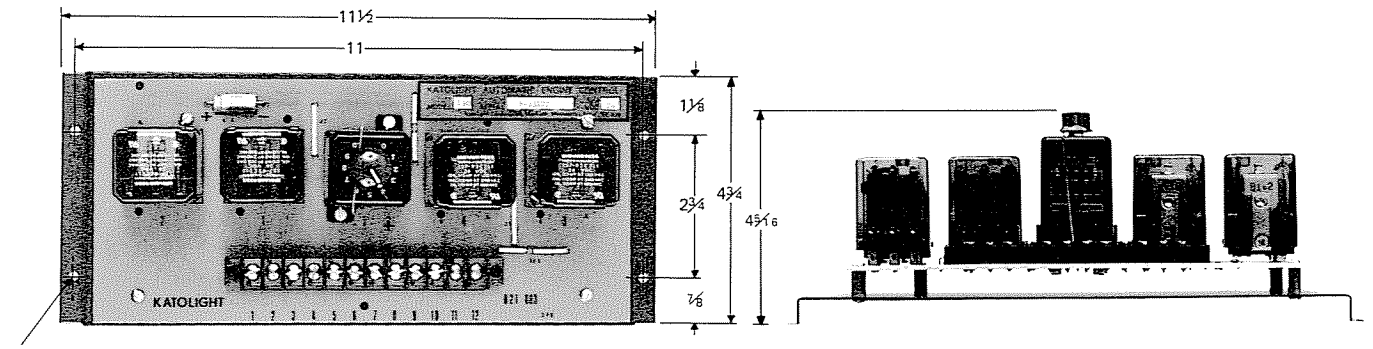

4 - MOUNTING HOLES
3/16 DIA.

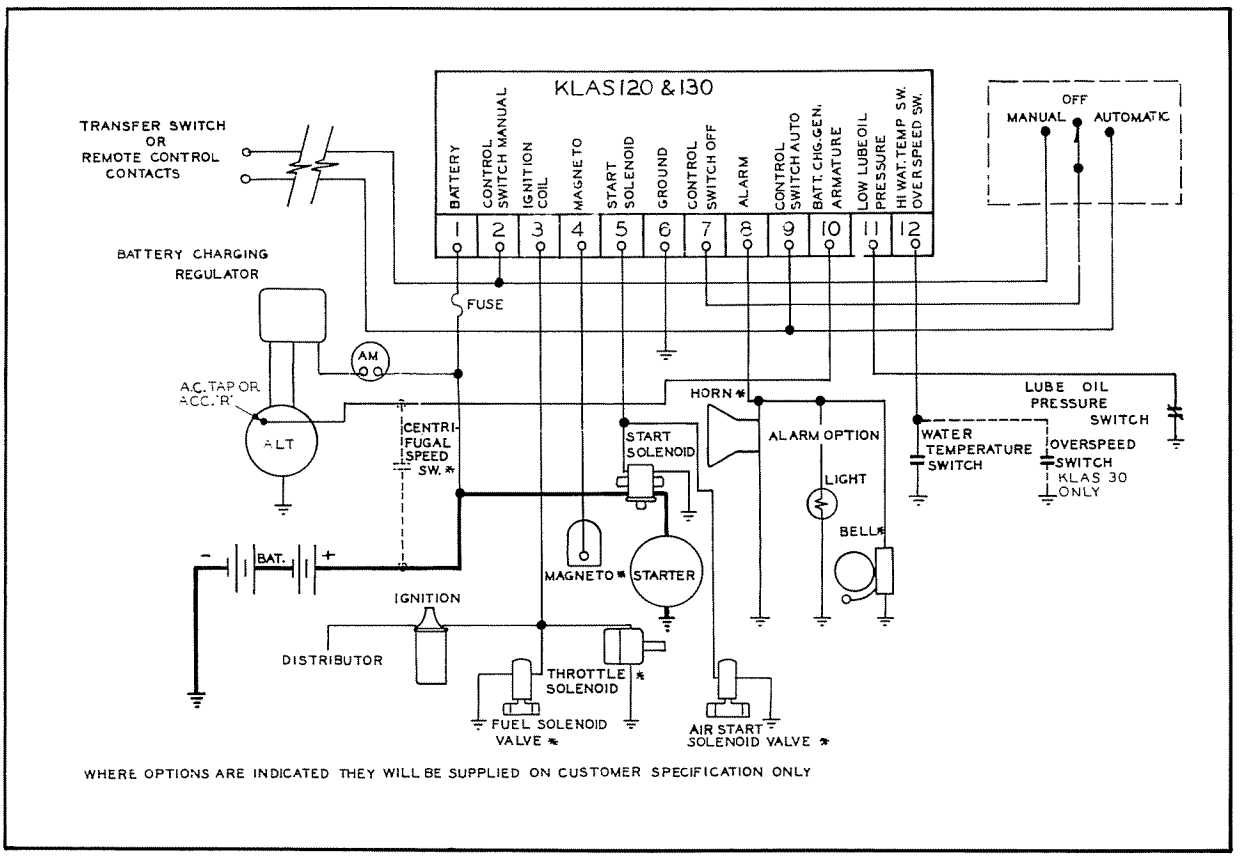

ACCESSORIES

Dust cover

Audible alarm, horn, or bell—available as an option, in addition to the standard visual alarm light.

ORDER PROCESSING

When ordering specify:

KLAS - model number
- battery voltage
- engine manufacturer
- enclosure number (dust cover optional)
- control switch (3 pos. std.) or (4 pos. optional)

TROUBLE SHOOTING CHART

SYMPTOM	CHECK FOR	CAUSE
Fail to crank	Blown fuse	Shorted leads when hooking up or overloaded circuits replace with SFE9.
	Low battery	May have defective battery or charger may not be functioning. Could have corroded or loose battery connection.
	Voltage at start solenoid	If voltage is present at starter, could have defective starter or solenoid. If no voltage at starter, could have open leads or you may have a signal already present at Terminal No. 10 to disconnnect starter.
	Voltage on Terminal No. 10	There should be no voltage on Terminal No. 10 during cranking. If present, check signal source.
Unit cranks, does not start	Fuel supply	May have empty tank — bleed fuel supply line. Gas units may have wrong pressure, 4-6 oz. on naturally aspirated units. Turbo charged units require higher pressure.
	Voltage on Terminal No. 3	If present, may have defective fuel valve or ignition system or loose connection. If no voltage present, may have dirty Contact 4-7 Relay 1 in engine control.
Unit will start then fail	Loss of fuel	Tank may be empty — fuel line may be broken or loose.
	Failure light	**Overcrank** = May not have received crank disconnect signal on Terminal No. 10. **Low oil** = Low oil level in crankcase — oil pump failed — defective switch. **High water** = Low water level in radiator — thermostat closed — broken fan belt — restricted air flow through radiator — ambient temperature too high — defective switch. **Overspeed** (KLAS 130 only) = Lost governor control — defective switch.
	Loose or open connections	May have lost power to control or ignition system.
Unit starts, but starter does not disengage	Voltage on Terminal No. 10	Voltage must be present after unit starts to operate crank disconnect relay in control. No voltage after engine starts indicates defective signal source, speed switch, pressure switch, battery charging alternator, etc. Voltage present on Terminal No. 10 would indicate defective Relay 2 or Diode D1 or Capacitor C1.
	Malfunctioning starter	Starter could be hanging up or pilot solenoid not disengaging.

KATOLIGHT CORPORATION
3201 Third Avenue
P.O. Box 3229
Mankato, Minnesota 56001
Phone: (507) 625-7973
Telex: 29-0787

Printed in U.S.A.

KLAS TEC 120-130-81

For more information contact your nearest Representative, Distributor, or Dealer below.

KATOLIGHT
AUTOMATIC START CONTROLS

MODEL:
KLAS 133

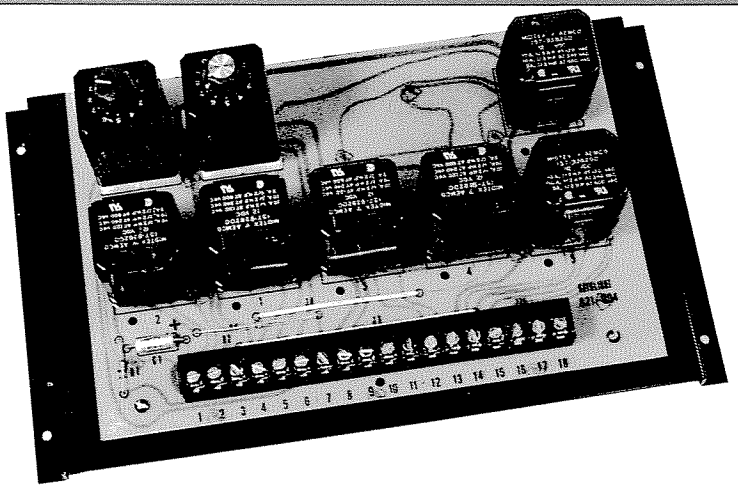

Katolight Automatic Start controls will automatically start and stop diesel, gasoline, natural gas, or LPG engine-generator sets under the control of an automatic transfer switch or load start contact closed to run. These controls are manufactured to high quality control standards to insure the satisfaction of Katolight's customers.

The Katolight KLAS 133 are non-cyclic automatic start controls that provide individual visual indication and automatic engine shutdown due to overcrank, low oil pressure, high water temperature, and overspeed conditions. An audible indication can also be provided as an option.

FEATURES

- Consistent operation for -20 to +60 degrees Centigrade.
- Reliable Katolight solid-state design timing relays.
- Heavy duty 10 amp relays with gold flashed contacts for reliable operation at low D.C. voltage.
- Compatibility with virtually all engines in today's market place.
- Ease of installation, simple bracket mounting.
- Barrier screw type terminals U.L. & C.S.A. Listed, with approved means for solderless connection of conductors.
- Accomodates requirements of NFPA-76A annunciator for hospital approval.
- Non-cyclic or one-shot crank featuring an adjustable one (1) to one-hundred (100) second engine cranking circuit.
- Plug-in type solid-state timers with sockets and retaining clips.
- External alarm circuit for remote failure indication.
- Available from stock.
- Three position "Auto, Off, Manual" switch. In "Manual" position, the control is energized immediately; in "Automatic," operation commences only when a remote set of contacts close, such as those of an automatic transfer switch. The center position is "Off". (The "Off" position is also reset. after any failure.)
- Printed circuits are extra heavy construction of .093 board and .004 copper.
- Available for 12 and 24 volt battery systems; negative ground.
- Positive lock-out circuits prohibit recranking while engine is running.
- Reverse polarity protection.

Printed in U.S.A.
Form KLAS 133-79

DIMENSIONS & WIRING DIAGRAMS

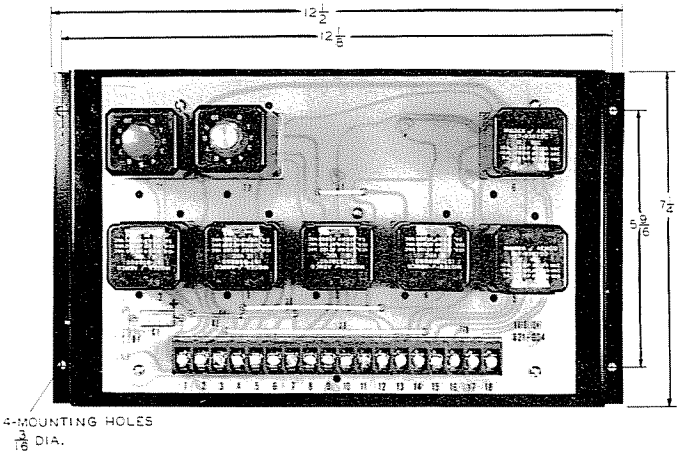

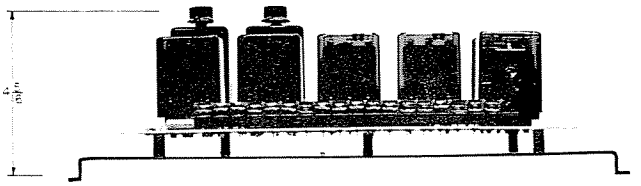

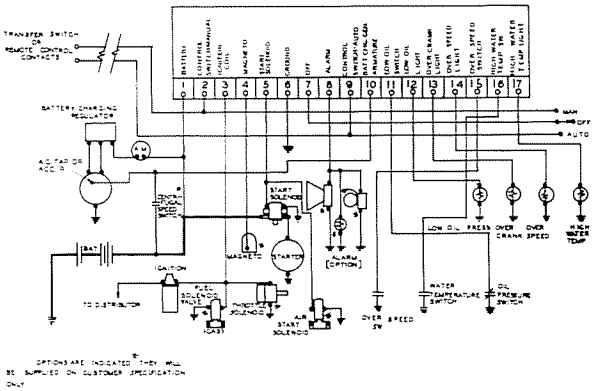

MODEL	ENGINE MAKE COMPATIBLE WITH	CRANKING MODE	OPERATING CONTROL MODE	BATTERY VOLTAGE	CRANK DISCONNECT
KLAS 133	Allis-Chalmers Deutz Caterpillar Ford Detroit Diesel Cummins White/Hercules Perkins Waukesha Lister International Harvestor Wisconsin and others	Continuous - non-cyclic	* Energized to run	12 or 24	12 or 24 VDC

* Katolight Automatic Start controls are "Engerized to Run" as standard, but "Energized to Stop" operation is available.

ACCESSORIES

- Dust cover
- Four position "Auto, Off, Manual, Test" rotary engine control switch. Same three functions as the three-position switch listed under Features on the front of this sheet except that "Test" position is added. The "Test" position provides that the automatic control is out of the circuit so that the engine may be started manually.
- Audible alarm, horn, or bell - available as an option, in addition to the standard visual alarm light.

ORDER PROCESSING
When ordering specify:
KLAS - model number
- battery voltage
- engine manufacturer
- enclosure number (dust cover optional)
- control switch (3 pos. std.) or (4 pos. optional)

KATOLIGHT CORPORATION
3201 Third Avenue
P.O. Box 3229
Mankato, MInnesota 56001
Phone: (507) 625-7973
Telex: 29-0787
Printed in U.S.A.

For more information contact your nearest Representative, Distributor, or Dealer below.

KATOLIGHT

AUTOMATIC START CONTROLS TECHNICAL BULLETIN

MODEL: KLAS 133

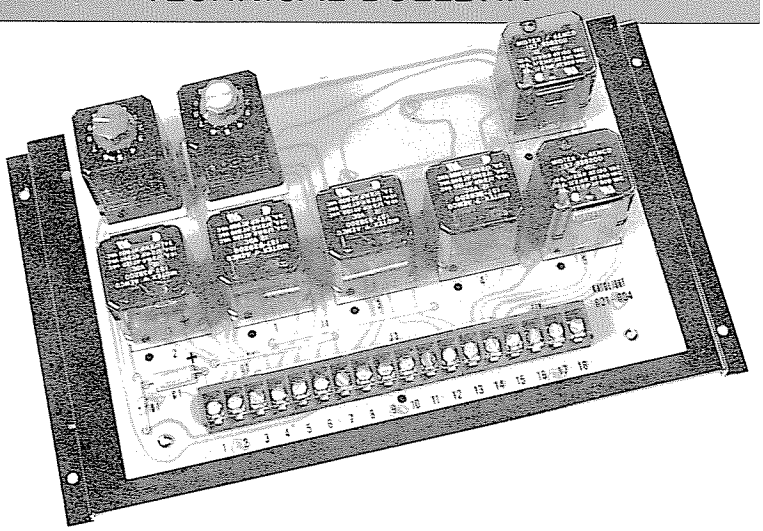

Katolight Automatic Start controls will automatically start and stop diesel, gasoline, natural gas, or LPG engine-generator sets under the control of an automatic transfer switch or load start contact closed to run. These controls are manufactured to highest quality control standards to insure reliability.

The Katolight KLAS 133 are non-cyclic automatic start controls that provide individual visual indication and automatic engine shutdown due to overcrank, low oil pressure, high water temperature, and overspeed conditions. An audible alarm can also be provided as an option.

FEATURES

- Consistent operation for -20 to +60 degrees Centigrade.
- Reliable Katolight solid-state design timing relays.
- Heavy duty 10 amp relays with gold flashed contacts for reliable operation at low D.C. voltage.
- Compatibility with virtually all engines in today's market place.
- Ease of installation, simple bracket mounting.
- Barrier screw type terminals U.L. & C.S.A. Listed, with approved means for solderless connection of conductors.
- Accomodates requirements of NFPA-76A annunciator for hospital approval.
- Non-cyclic or one-shot crank featuring an adjustable one (1) to one-hundred (100) second engine cranking circuit.
- Plug-in type solid-state timers with sockets and retaining clips.
- External alarm circuit for remote failure indication.
- Available from stock.
- Three position "Auto, Off, Manual" switch. In "Manual" position, the control is energized immediately; in "Automatic," operation commences only when a remote set of contacts close, such as those of an automatic transfer switch. The center position is "Off". (The "Off" position is also reset. after any failure.)
- Printed circuits are extra heavy construction of .093 board and .004 copper.
- Available for 12 and 24 volt battery systems; negative ground.
- Positive lock-out circuits prohibit recranking while engine is running.
- Reverse polarity protection.

MODEL	CRANKING MODE	OPERATING CONTROL MODE	BATTERY VOLTAGE	CRANK DISCONNECT
KLAS 133	Continuous - non-cyclic	* Energized to run	12 or 24	12 or 24 VDC

* Katolight Automatic Start controls are "Energized to Run" as standard, but "Energized to Stop" option is available.

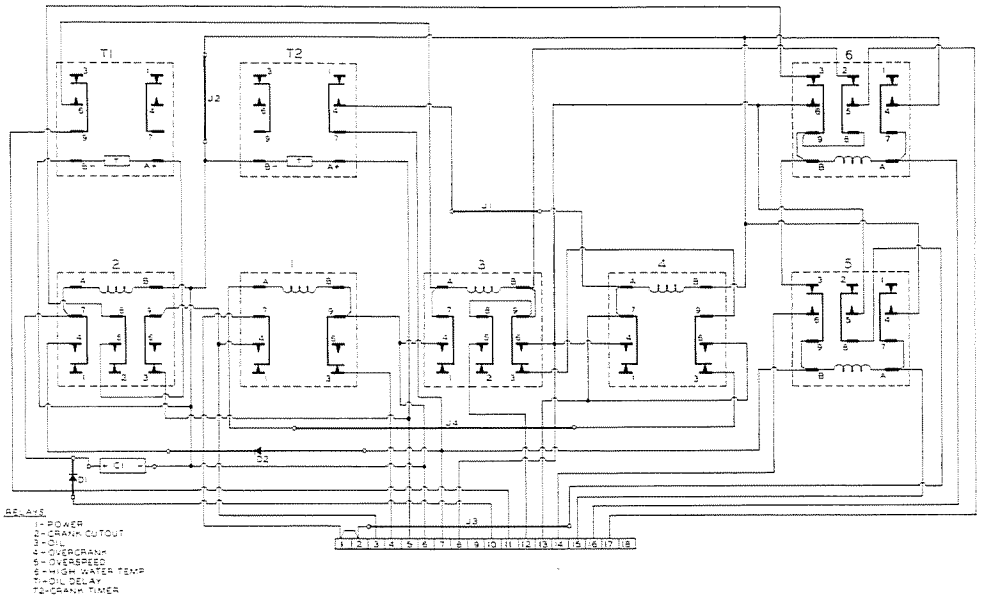

CONTROL OPERATION

Current during cranking flows from Terminal No. 7 through normally closed Contact 3-9 Relay 5, through normally closed Contact 2-8 Relay 6, through normally closed Contact 3-9, Relay 3, through normally closed Contact 3-9 Relay 4, through Jumper J4 to energize Relay 1.

Relay 1 operates opening normally closed Contact 3-9 ungrounding Terminal No. 4 magneto (if used) and closes normally open Contact 4-7 energizing Terminal No. 3, (ignition coil or throttle solenoid) and through normally closed Contact 3-9 Relay 2, to Terminal No. 5 (start solenoid) and crank timer T-2.

If engine starts, Terminal No. 10 must be energized with a positive voltage from either speed switch, pressure switch, or battery charging alternator etc., which energizes Relay 2 through diode D1. Relay 2 opens normally closed Contact 3-9 de-energizing Terminal No. 5 (start solenoid) and crank timer T-2 and closes normally open Contact 5-8 activating timer T-1 oil delay and closes normally open Contact 4-7 locking in Relay No. 2 to prevent starter from becoming energized if the crank disconnect signal on Terminal No. 10 is lost during engine operation.

If engine doesn't start, timer T-2 will time out (normally set at 45 seconds). Timer T-2 closes normally open Contact 4-7, energizes Relay 4 and Terminal 13 overcrank light. Relay 4 will open normally closed Contact 3-9, de-energize Relay 1 (to stop cranking) and close normally open Contact 4-7 energizing Terminal No. 8 and latch itself in Failure mode. Terminal No. 8 energizes failure alarm (if used).

To reset control after failure, turn engine control switch to "off" position.

SELECTOR SWITCH MODE OF OPERATION

"AUTO" Places the control under control of remote start contact. This contact will control the engine—close to start —open to stop.

"OFF" Shuts engine down and/or resets control after failure. **CAUTION:** Always put switch in "off" position when servicing engine.

"MAN" Starts engine and operates with all safety shutdown features in operation.

"TEST" Additional position on 4 position switch. Allows you to start engine by bypassing engine control completely. **CAUTION:** No safety shutdown features will function in "test" position.

"FAILURE" Failure indicating lights. Overcrank engine cranked but failed to start. **Overspeed** = engine started and exceeded 10% overspeed. **Low oil** = engine started then lost oil pressure. **High water** = engine started then overheated.

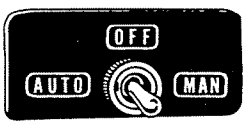

3 POSITION SWITCH

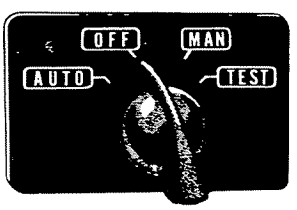

4 POSITION ROTARY SWITCH

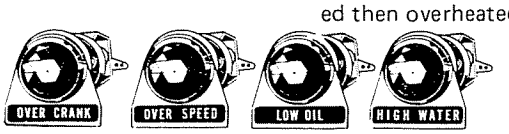

FAILURE INDICATING LIGHTS

DIMENSIONS & WIRING DIAGRAMS

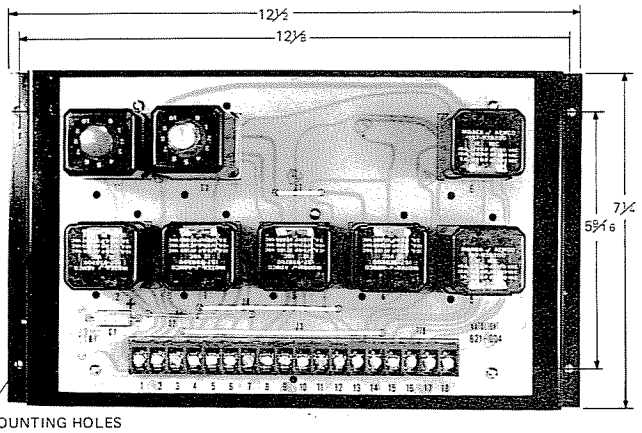

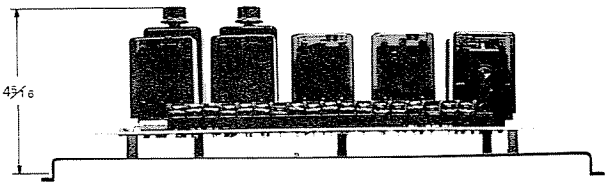

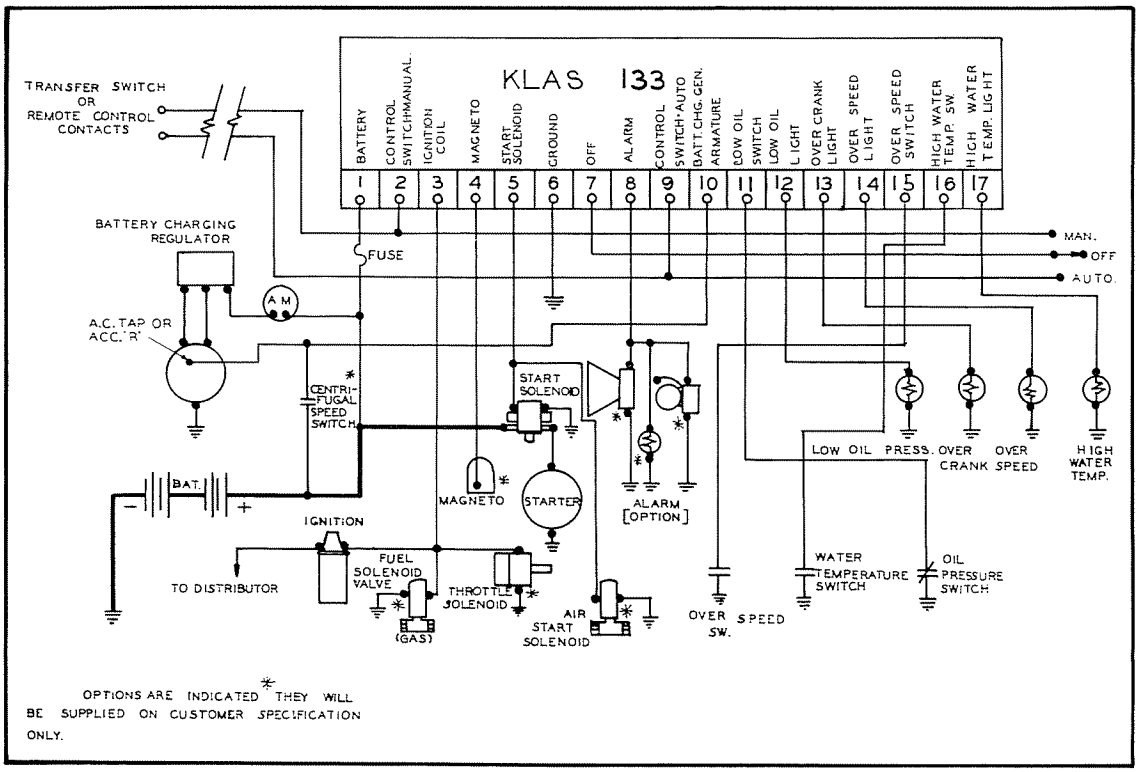

ACCESSORIES

Dust cover

Audible alarm, horn or bell—available as an option, in addition to the standard visual alarm light.

ORDER PROCESSING

When ordering specify:

KLAS - model number
- battery voltage
- engine manufacturer
- enclosure number (dust cover optional)
- control switch (3 pos. std.) or (4 pos. optional)

TROUBLE SHOOTING CHART

SYMPTOM	CHECK FOR	CAUSE
Fail to crank	Blown fuse	Shorted leads when hooking up or overloaded circuits replace with SFE9.
	Low battery	May have defective battery or charger may not be functioning. Could have corroded or loose battery connection.
	Voltage at start solenoid	If voltage is present at starter, could have defective starter or solenoid. If no voltage at starter, could have open leads or you may have a signal already present at Terminal No. 10 to disconnnect starter.
	Voltage on Terminal No. 10	There should be no voltage on Terminal No. 10 during cranking. If present, check signal source.
Unit cranks, does not start	Fuel supply	May have empty tank — bleed fuel supply line. Gas units may have wrong pressure, 4-6 oz. on naturally aspirated units. Turbo charged units require higher pressure.
	Voltage on Terminal No. 3	If present, may have defective fuel valve or ignition system or loose connection. If no voltage present, may have dirty Contact 4-7 Relay 1 or bad diode (4 position switch only) D3 in engine control.
Unit will start then fail	Loss of fuel	Tank may be empty — fuel line may be broken or loose.
	Failure lights	**Overcrank** = May not have received crank disconnect signal on Terminal No. 10 — defective timer. **Low oil** = Low oil level in crankcase — oil pump failed — defective switch. **High water** = Low water level in radiator — thermostat closed — broken fan belt — restricted air flow through radiator — ambient temperature too high — Defective switch. **Overspeed** = Lost governor control — defective switch.
	Loose or open connections	May have lost power to control or ignition system.
Unit starts, but starter does not disengage	Voltage on Terminal No. 10	Voltage must be present after unit starts to operate crank disconnect relay in control. No voltage after engine starts indicates defective signal source, speed switch, pressure switch, battery charging alternator, etc. Voltage present on Terminal No. 10 would indicate defective Relay 2 or Diode D1 or Capacitor C1.
	Malfunctioning starter	Starter could be hanging up or pilot solenoid not disengaging.

KATOLIGHT CORPORATION
3201 Third Avenue
P.O. Box 3229
Mankato, MInnesota 56001
Phone: (507) 625-7973
Telex: 29-0787
Printed in U.S.A.
KLAS TEC 133-81

For more information contact your nearest Representative, Distributor, or Dealer below.

KATOLIGHT

AUTOMATIC START CONTROLS

MODELS:
KLAS 261
KLAS 262

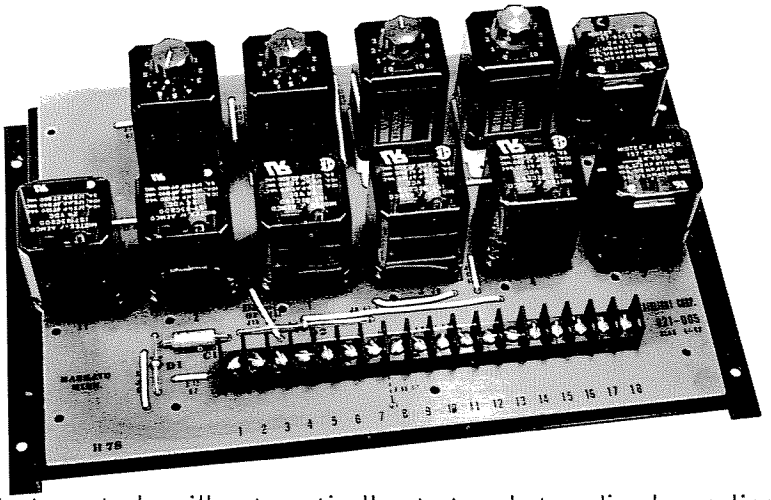

Katolight Automatic Start controls will automatically start and stop diesel, gasoline, natural gas, or LPG engine-generator sets under the control of an automatic transfer switch or load start contact closed to run. These controls are manufactured to high quality control standards to insure the satisfaction of Katolight's customers.

The Katolight KLAS 261 and KLAS 262 are cyclic automatic start controls. The KLAS 261 provides visual indication and automatic engine shutdown due to overcrank, high water temperature, overspeed and low oil pressure and one additional failure function. An audible indication can also be provided on both units as an option.

FEATURES

- Consistent operation for -20 to +60 degrees Centigrade.
- Reliable Katolight solid-state design timing relays.
- Heavy duty 10 amp relays with gold flashed contacts for reliable operation at low D.C. voltage.
- Compatibility with virtually all engines in today's market place.
- Ease of installation, simple bracket mounting.
- Barrier screw type terminals U.L. & C.S.A. Listed, with approved means for solderless connection of conductors.
- Accomodates requirements for NFPA-76A annunciator for hospital approval.
- Adjustable one (1) to one-hundred (100) second engine cranking circuit.
- Plug-in type solid-state timers with sockets and retaining clips.
- External alarm circuit for remote failure indication.
- Available from stock.
- Three position "Auto, Off, Manual" switch. In "Manual" position, the control is energized immediately; in "Automatic," operation commences only when a remote set of contacts close, such as those of an automatic transfer switch. The center position is "Off". (The "Off" position is also reset. after any failure.)
- Printed circuits are extra heavy construction of .093 board and .004 copper.
- Available for 12 and 24 volt battery systems; negative ground.
- Positive lock-out circuits prohibit recranking while engine is running.
- Cyclic cranking, consisting of repetetive crank and rest, and are adjustable.
- Reverse polarity protection.

Printed in U.S.A.
Form KLAS 261-262-79

DIMENSIONS & WIRING DIAGRAMS

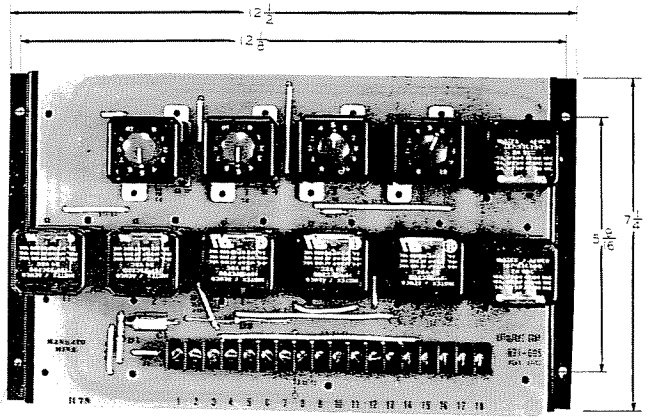

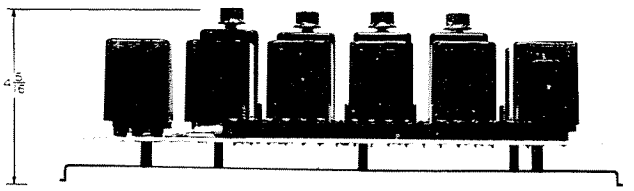

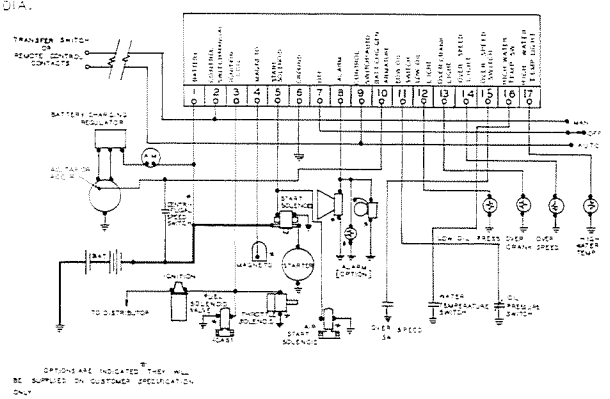

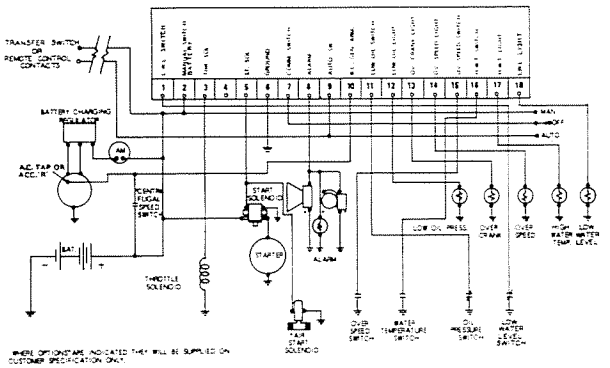

MODEL 261

MODEL 262

MODEL	ENGINE MAKE COMPATIBLE WITH	CRANKING MODE	OPERATING CONTROL MODE	BATTERY VOLTAGE	CRANK DISCONNECT
KLAS 261	Allis-Chalmers Deutz Caterpillar Ford Detroit Diesel Cummins White/Hercules Perkins Waukesha Lister International Harvestor Wisconsin and others	Cyclic	* Engerized to run	12 or 24	12 or 24 VDC
KLAS 262		Cyclic	Energized to run	12 or 24	12 or 24 VDC

* Katolight Automatic Start controls are "Energized to Run" as standard, but "Energized to Stop" option is available.

ACCESSORIES

- Dust cover
- Four position "Auto, Off, Manual, Test" rotary engine control switch. Same three functions as the three-position switch listed under Features on the front of this sheet except that "Test" position is added. The "Test" position provides that the automatic control is out of the circuit so that the engine may be started manually.
- Audible alarm, horn, or bell - available as an option, in addition to the standard visual alarm light.

ORDER PROCESSING

When ordering specify:

KLAS - model number
- battery voltage
- engine manufacturer
- enclosure number (dust cover optional)
- control switch (3 pos. std.) or (4 pos. optional)

KATOLIGHT CORPORATION
3201 Third Avenue
P.O. Box 3229
Mankato, Minnesota 56001
Phone: (507) 625-7973
Telex: 29-0787

Printed in U.S.A.

For more information contact your nearest Representative, Distributor, or Dealer below.

KATOLIGHT

AUTOMATIC START CONTROLS TECHNICAL BULLETIN

MODELS: KLAS 261 KLAS 262

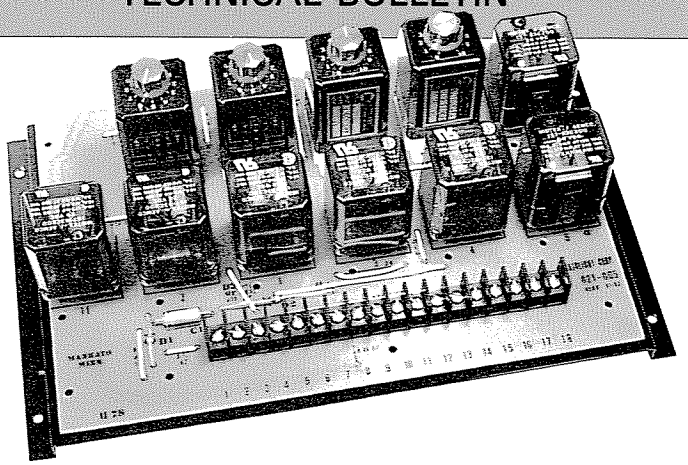

Katolight Automatic Start controls will automatically start and stop diesel, gasoline, natural gas, or LPG engine-generator sets under the control of an automatic transfer switch or load start contact closed to run. These controls are manufactured to highest quality control standards to insure reliability.

The Katolight KLAS 261 and KLAS 262 are cyclic automatic start controls. The KLAS 261 provides visual indication and automatic engine shutdown due to overcrank, high water temperature, overspeed and low oil pressure and one additional failure function available on KLAS 262. An audible alarm can also be provided on both units as an option.

FEATURES

- Consistent operation for -20 to +60 degrees Centigrade.
- Reliable Katolight solid-state design timing relays.
- Heavy duty 10 amp relays with gold flashed contacts for reliable operation at low D.C. voltage.
- Compatibility with virtually all engines in today's market place.
- Ease of installation, simple bracket mounting.
- Barrier screw type terminals U.L. & C.S.A. Listed, with approved means for solderless connection of conductors.
- Accomodates requirements for NFPA-76A annunciator for hospital approval.
- Adjustable one (1) to one-hundred (100) second engine cranking circuit.
- Plug-in type solid-state timers with sockets and retaining clips.
- External alarm circuit for remote failure indication.
- Available from stock.
- Three position "Auto, Off, Manual" switch. In "Manual" position, the control is energized immediately; in "Automatic," operation commences only when a remote set of contacts close, such as those of an automatic transfer switch. The center position is "Off". (The "Off" position is also reset. after any failure.)
- Printed circuits are extra heavy construction of .093 board and .004 copper.
- Available for 12 and 24 volt battery systems; negative ground.
- Positive lock-out circuits prohibit recranking while engine is running.
- Cyclic cranking, consisting of repetetive crank and rest, and are adjustable.
- Reverse polarity protection.

MODEL	CRANKING MODE	OPERATING CONTROL MODE	BATTERY VOLTAGE	CRANK DISCONNECT
KLAS 261	Cyclic	* Energized to run	12 or 24	12 or 24 VDC
KLAS 262	Cyclic	Energized to run	12 or 24	12 or 24 VDC

* Katolight Automatic Start controls are "Energized to Run" as standard, but "Energized to Stop" option is available.

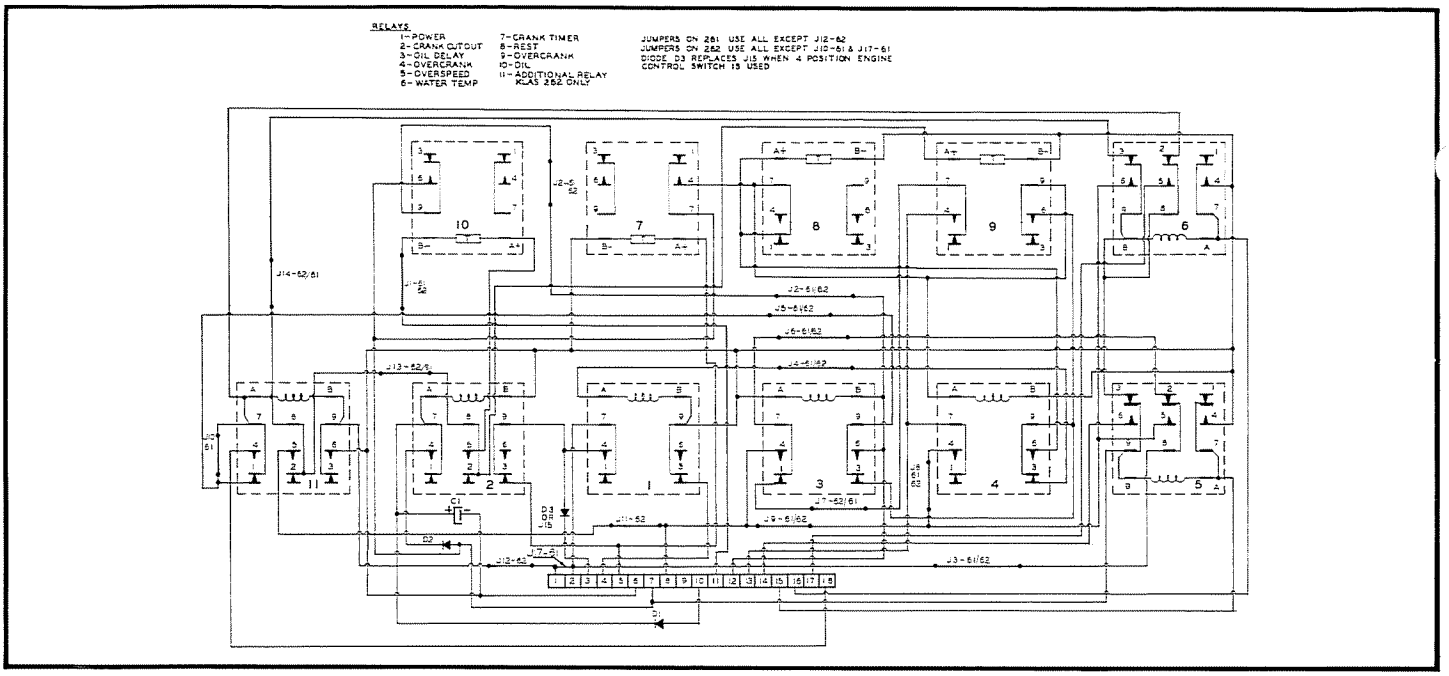

CONTROL OPERATION

Current during cranking flows from Terminal No. 7 through normally closed Contact 3-9 Relay 5, through normally closed Contact 2-8 Relay 6, through Jumper J10-61 through Jumper J5-61/62 through normally closed Contact 3-9 Relay 3, through normally closed Contact 3-9 Relay 4, through Jumper J4-61/62 to energize Relay 1.

Relay 1 operates opening normally closed Contact 3-9 ungrounding Terminal No. 4 magneto (if used) and closes normally open Contact 4-7 energizing Terminal No. 3 (ignition coil or throttle solenoid) and through normally closed Contact 3-9 Relay 2, to Terminal No. 5 (start solenoid) and crank timer T-7.

If engine starts, Terminal No. 10 must be energized with a positive voltage from either speed switch, pressure switch, or battery charging alternator etc., which energizes Relay 2 through diode D1. Relay 2 then opens normally closed Contact 3-9 de-energizing Terminal No. 5 (start solenoid) and crank timer T-7 and closes normally open Contact 4-7 locking in Relay No. 2 to prevent starter from becoming energized if the crank disconnect signal on Terminal No. 10 is lost during engine operation.

This control has cyclic cranking. If engine does not start in an adjustable time, normally set at 10 seconds, the control will discontinue cranking for an adjustable time normally set at 10 seconds and then continue cranking again. The control will repeat cycle-cranking for an adjustable period normally set at 5 attempts. After the fifth crank attempt, if the engine hasn't started, Timer T-9 operates closing normally open Contact 4-7, energizing Terminal No. 13, overcrank light closes normally open Contact 6-9 energizing Relay No. 4. Relay No. 4 closes normally open Contact 4-7 energizing Terminal No. 8 (alarm) through Jumper J8-61/62 and J9-61/62 and opens normally closed Contact 3-9 de-energizing Relay No. 1 to stop cranking, closes normally open Contact 6-9 locking itself in the failure mode.

To reset control after failure, turn engine control switch to "off" position.

SELECTOR SWITCH MODE OF OPERATION

"AUTO" Places the control under control of remote start contact. This contact will control the engine—close to start —open to stop.

"OFF" Shuts engine down and/or resets control after failure. **CAUTION:** Always put switch in "off" position when servicing engine.

"MAN" Starts engine and operates with all safety shutdown features in operation.

"TEST" Additional position on 4 position switch. Allows you to start engine by bypassing engine control completely. **CAUTION:** No safety shutdown features will function in "test" position.

"FAILURE" Failure indicating lights. Overcrank engine cranked but failed to start. **Overspeed** = engine started and exceeded 10% overspeed. **Low oil** = engine started then lost oil pressure. **High water** = engine started then overheated.

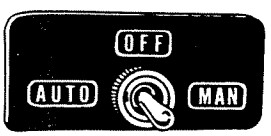

3 POSITION SWITCH

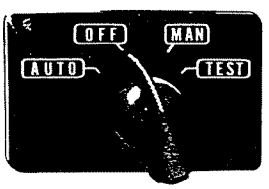

4 POSITION ROTARY SWITCH

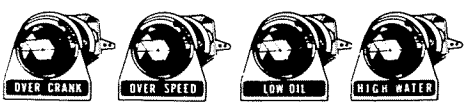

FAILURE INDICATING LIGHTS

DIMENSIONS & WIRING DIAGRAMS

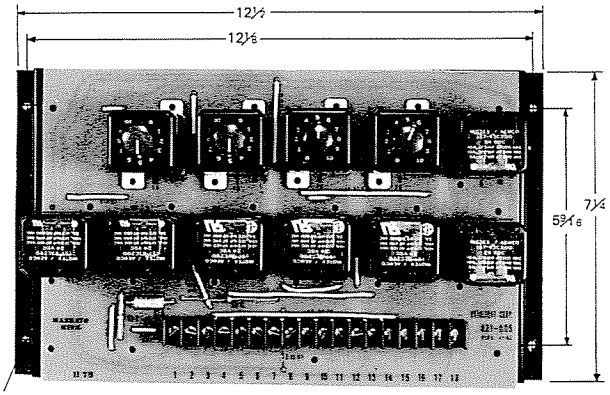



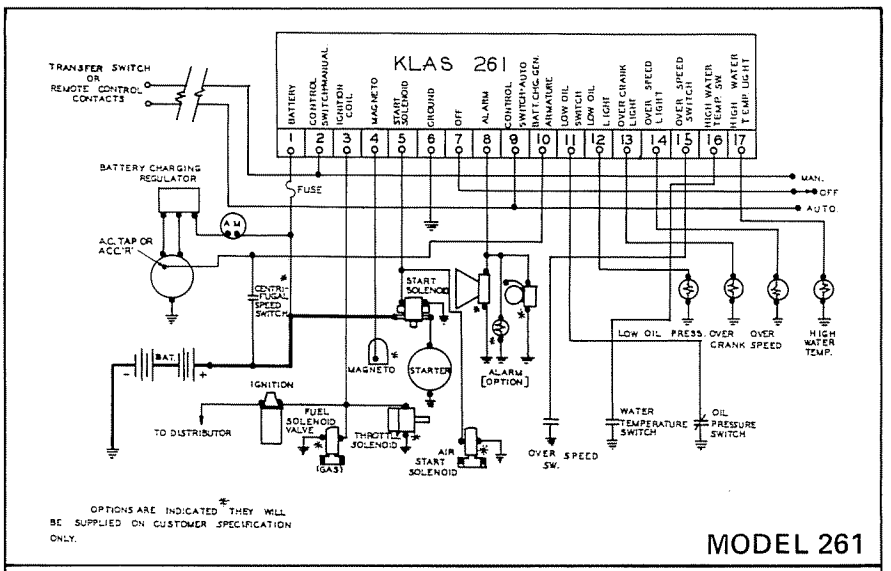

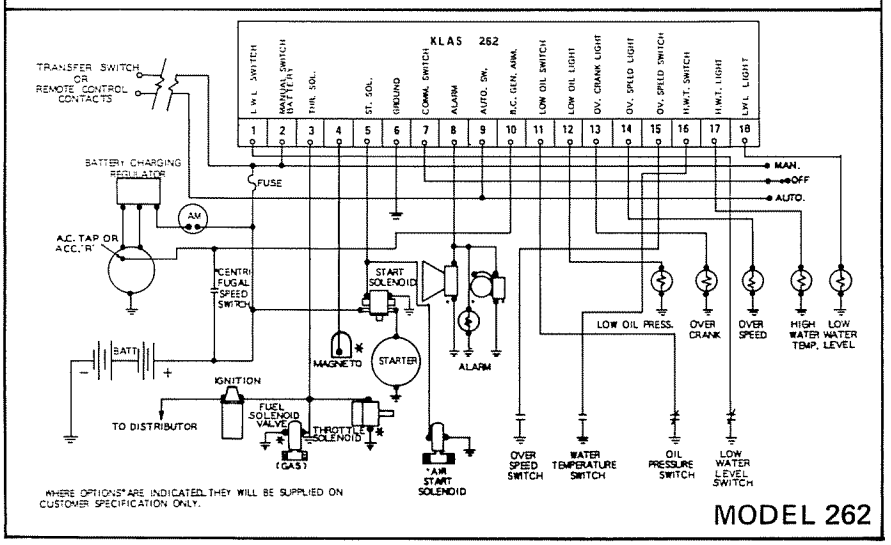

ACCESSORIES

Dust cover

Audible alarm, horn or bell—available as an option, in addition to the standard visual alarm light.

ORDER PROCESSING

When ordering specify:

KLAS - model number
- battery voltage
- engine manufacturer
- enclosure number (dust cover optional)
- control switch (3 pos. std.) or (4 pos. optional)

TROUBLE SHOOTING CHART

SYMPTOM	CHECK FOR	CAUSE
Fail to crank	Blown fuse	Shorted leads when hooking up or overloaded circuits replace with SFE9.
	Low battery	May have defective battery or charger may not be functioning. Could have corroded or loose battery connection.
	Voltage at start solenoid	If voltage is present at starter, could have defective starter or solenoid. If no voltage at starter, could have open leads or you may have a signal already present at Terminal No. 10 to disconnnect starter.
	Voltage on Terminal No. 10	There should be no voltage on Terminal No. 10 during cranking. If present, check signal source.
Unit cranks, does not start	Fuel supply	May have empty tank — bleed fuel supply line. Gas units may have wrong pressure, 4-6 oz. on naturally aspirated units. Turbo charged units require higher pressure.
	Voltage on Terminal No. 3	If present, may have defective fuel valve or ignition system or loose connection. If no voltage present, may have dirty Contact 4-7 Relay 1 or bad diode (4 position switch only) D3 in engine control.
Unit will start then fail	Loss of fuel	Tank may be empty — fuel line may be broken or loose.
	Failure lights	**Overcrank** = May not have received crank disconnect signal on Terminal No. 10 — defective timer. **Low oil** = Low oil level in crankcase — oil pump failed — defective switch. **High water** = Low water level in radiator — thermostat closed — broken fan belt — restrictec air flow through radiator — ambient termperature too high — Defective switch. **Overspeed** = Lost governor control — defective switch.
	Loose or open connections	May have lost power to control or ignition system.
Unit starts, but starter does not disengage	Voltage on Terminal No. 10	Voltage must be present after unit starts to operate crank disconnect relay in control. No voltage after engine starts indicates defective signal source, speed switch, pressure switch, battery charging alternator, etc. Voltage present on Terminal No. 10 would indicate defective Relay 2 or Diode D1 or Capacitor C1.
	Malfunctioning starter	Starter could be hanging up or pilot solenoid not disengaging.

KATOLIGHT CORPORATION
3201 Third Avenue
P.O. Box 3229
Mankato, Minnesota 56001
Phone: (507) 625-7973
Telex: 29-0787

Printed in U.S.A.
KLAS TEC 261-262-81

For more information contact your nearest Representative, Distributor, or Dealer below.

KLAS CONTROLS 10,20,30,40,50,60,33,61

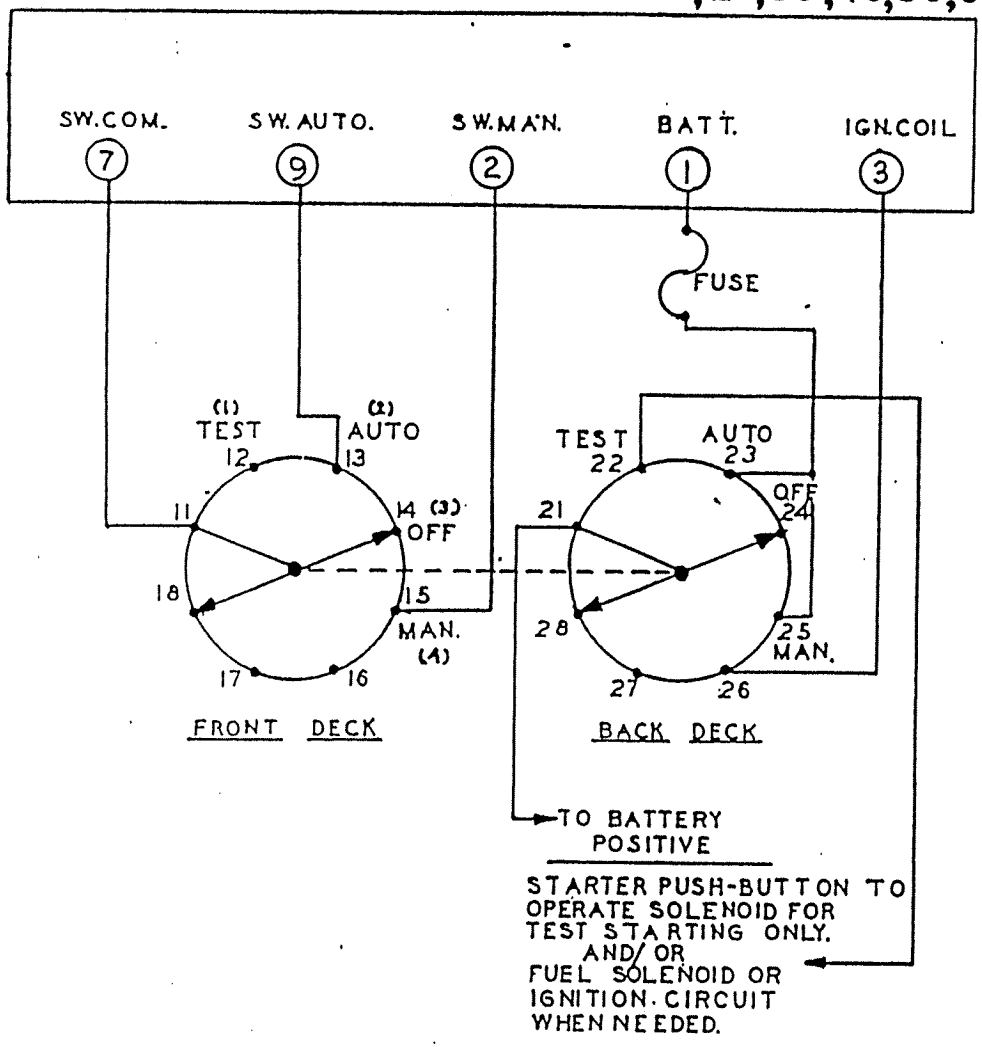

IN #1 OR "TEST" POSITION, THE ENGINE CONTROL IS OUT OF THE CIRCUIT AND ALL CRANKING AND/OR SAFETY DEVICES ARE INOPERATIVE. THE ENGINE WILL START WHEN THE STARTER BUTTON IS DEPRESSED AND RUN UNTIL THE SWITCH IS MOVED TO THE "OFF" POSITION.

IN #2 OR "AUTO" POSITION, THE CONTROL AND SAFETY DEVICES WILL BE IN THE STARTING CIRCUIT AND START OR STOP THE UNIT AS DETERMINED BY THE REMOTE CONTACTS OF THE TRANSFER SWITCH.

IN # 3 OR "OFF" POSITION, THE UNIT WILL STOP AND REMAIN OFF UNTIL THE CONTROL SWITCH IS MOVED TO ANOTHER POSITION.

IN #4 OR "MANUAL" POSITION, THE UNIT WILL CRANK AND START AS DETERMINED BY THE ENGINE CONTROL. THE SAFETY DEVICES ARE OPERATIVE. THE UNIT WILL RUN UNTIL SHUT DOWN BY MOVING THE SWITCH TO THE "OFF" POSITION.

THIS SWITCH WILL BE FURNISHED INLIEU OF THE STANDARD 3-POSITION SWITCH WHEN SPECIFIED AND CONTAINED IN THE CONTROL PANEL AND PRE-WIRED UNLESS SPECIFIED OTHERWISE.

KATOLIGHT CORPORATION MANKATO, MINNESOTA

SCALE	DATE	ASSEMBLY OR PART NUMBER	MODEL
NONE	3-12-68	812-007-2	4 POSITION ENGINE CONTROL SWITCH

DESCRIPTION - IGNITION OR THROTTLE	
SOLENOID ENERGIZED TO RUN	
	DR.

Katolight Service - Master Repair Manual - Page 2229

KATOLIGHT CORPORATION

LOW WATER LEVEL SWITCH DIAGRAM

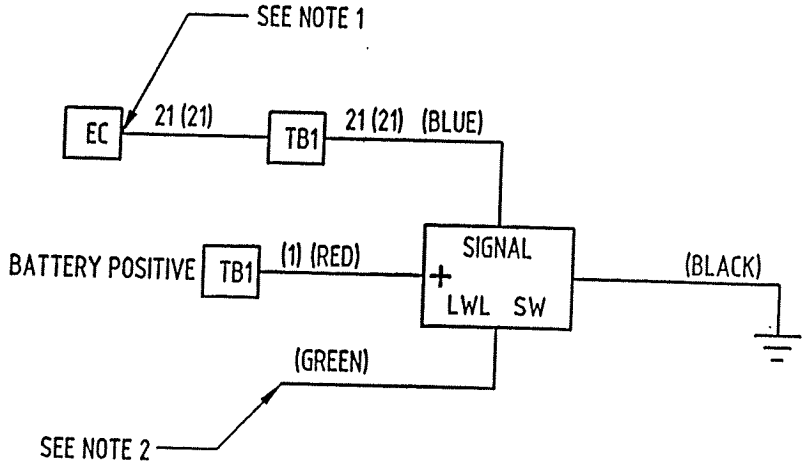

NOTES:

1. WIRED TO KASSEC #21 WHICH IS THE INPUT SHUTDOWN AND THEN OUT ON KASSEC #17 TO THE FAILURE LIGHT BOARD. WHEN HOOKED IN PARALLEL WITH THE HIGH ENGINE TEMPERATURE SWITCH THE BLUE WIRE IS HOOKED TO KASSEC #22 THE INPUT SHUTDOWN AND THEN OUT ON KASSEC #15 TO THE FAILURE LIGHT BOARD.
2. THE GREEN WIRE IS NOT USED.

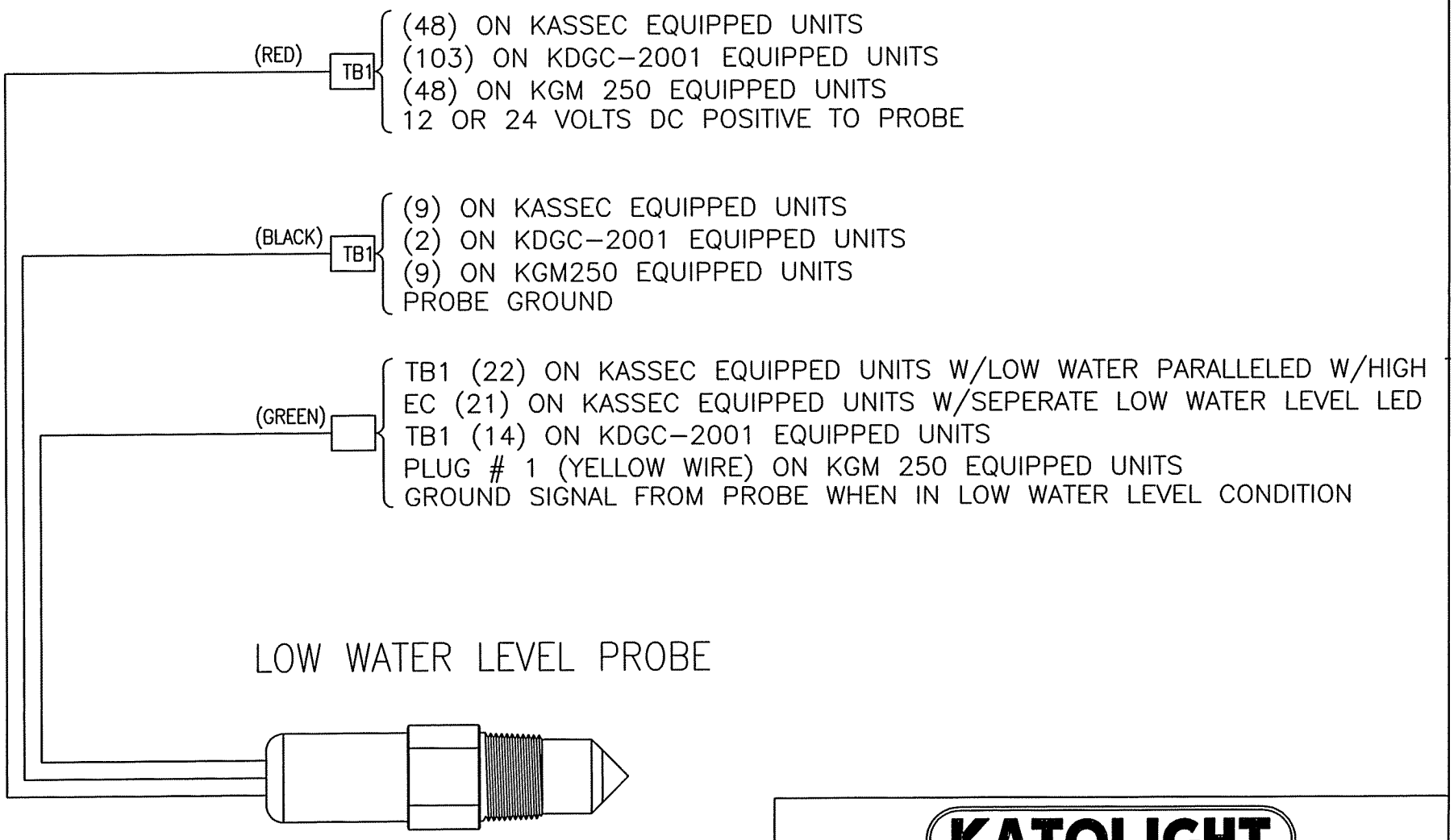

KATOLIGHT

MANKATO, MINNESOTA

INSTALLATION DIAGRAM

SIZE	DATE	DWG NO	
A	7–19–2001	800–186	
DESCRIPTION	PART # 73500	DWN BY ECG	SHEET 1 OF 1

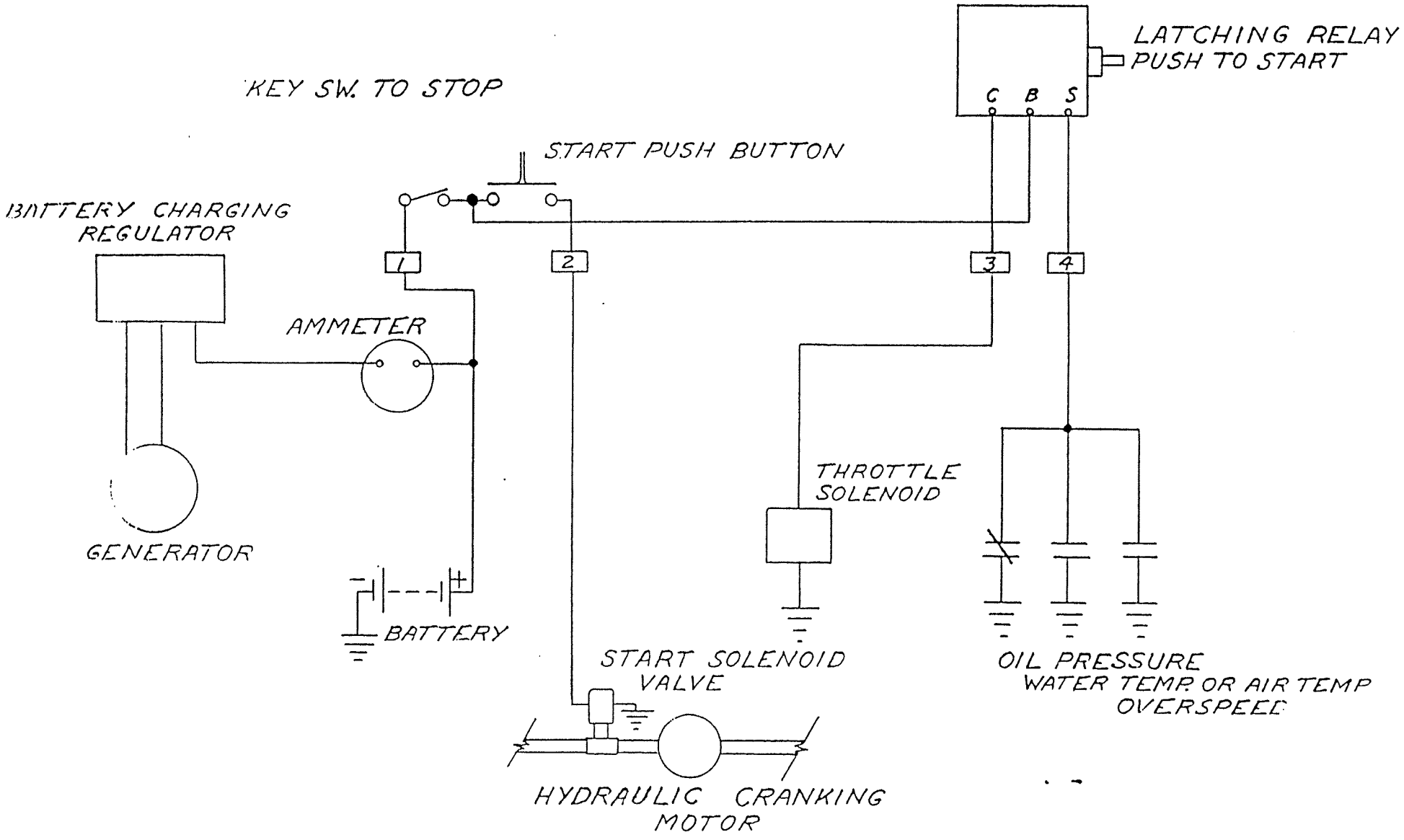

KATOLIGHT CORPORATION MANKATO, MINNESOTA

SCALE	DATE	ASSEMBLY OR PART NO.	MODEL
NONE	6-13-68	816-A-001-1	ENG CONTROL DIESEL MAN

DESCRIPTION MURPHY SAFETY CONTROL	KW	KVA
MANUAL		

Katolight Service - Master Repair Manual - Page 2235

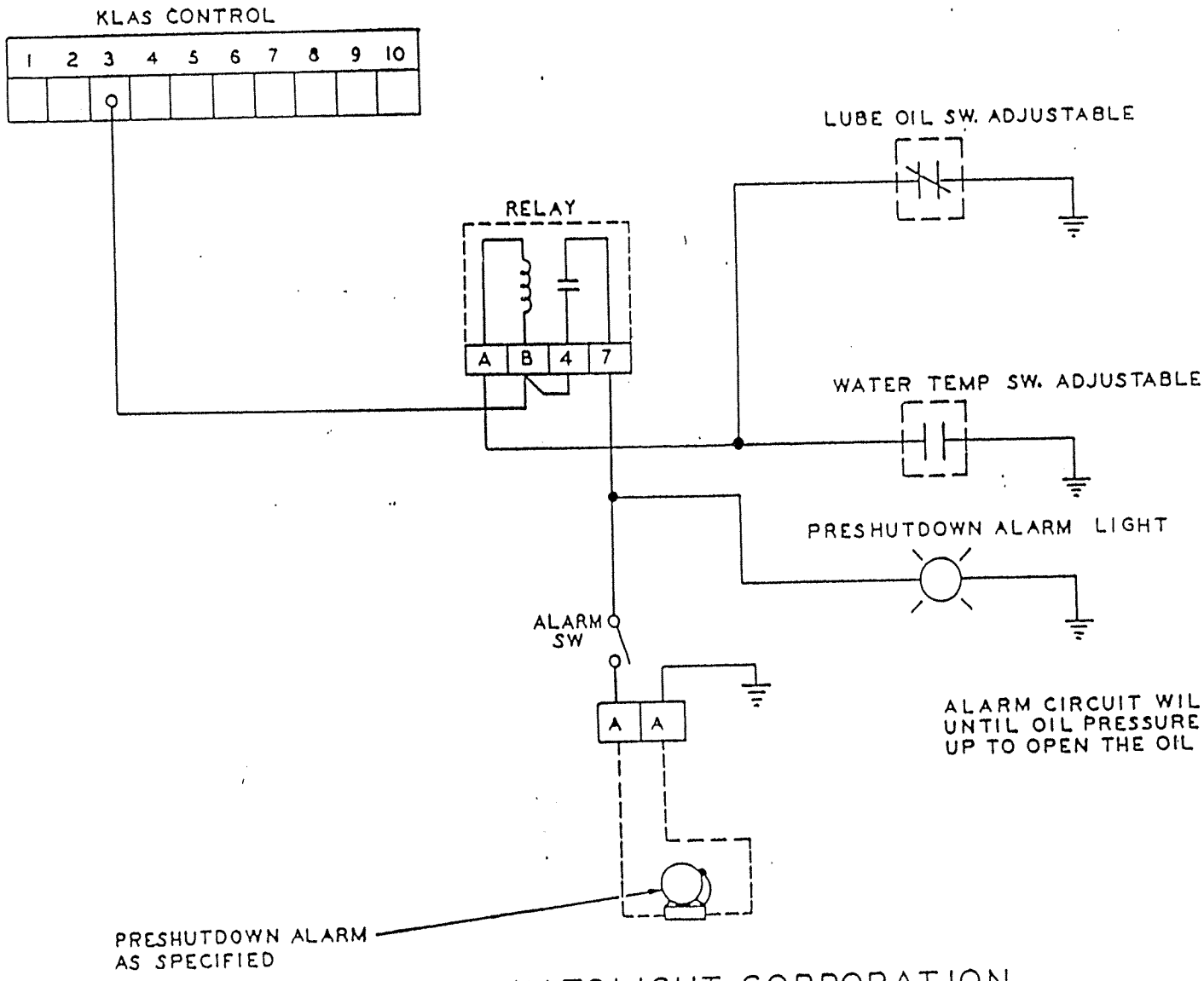

ALARM CIRCUIT WILL BE COMPLETED UNTIL OIL PRESSURE HAS TIME TO BUILD UP TO OPEN THE OIL SWITCH CONTACTS

REV:
CHANGED FROM GUARDIAN RELAY TO MIDTEX RELAY 6-4-76

KATOLIGHT CORPORATION — MANKATO MINN

SCALE	DATE	ASSEMBLY OR PART NO.	MODEL
NONE	8-28-68	818-009	PRESHUTDOWN ALARM

DESCRIPTION	

Katolight Service - Master Repair Manual - Page 2237

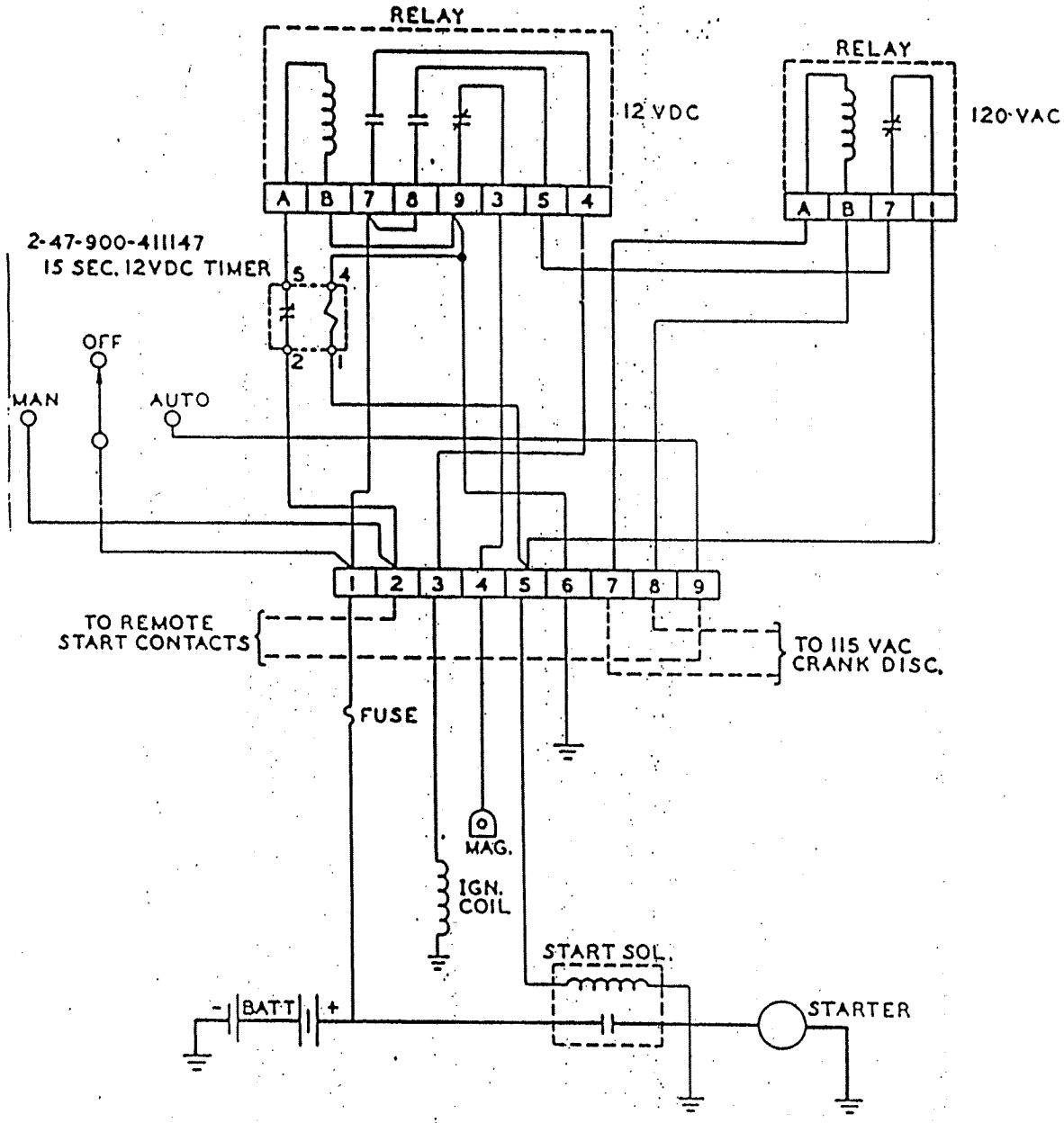

KATOLIGHT CORPORATION — MANKATO, MINNESOTA

SCALE	DATE	ASSEMBLY OR PART NO.	MODEL
NONE	4 - 19 - 71	812 - 42 - 1	KLAS I CM

DESCRIPTION	KW	KVA
TWO WIRE AUTOMATIC START CONTROL MOUNTED		

REV. ADDED CYCLE CRANKING 3-7-72.
REV. RELAY TERM WAS 12-13-1-4 10-27-71

Speed Monitor

Model SM124

KATOLIGHT CORPORATION

HIGHLIGHTS

- Protects generator sets against overspeed
- Construction - epoxy encapsulated
- Sensing - 120 VAC



SPECIFICATIONS

- Construction - epoxy encapsulated
- Sensing - 120 VAC
- Operating trip point - 66.5 or 71 Hz (selectable)
- Switch contact rating - .6 amp, 120 VAC resistive (2 amp, 40 VDC)
- Operating temperature - -40 to +70° C (-40 to -158° F)
- Current draw - .07 amp maximum
- Voltage - 12 or 24 VDC #79029
- Accuracy - ± .5 Hz
- Mounting - 2 holes

DIMENSIONS

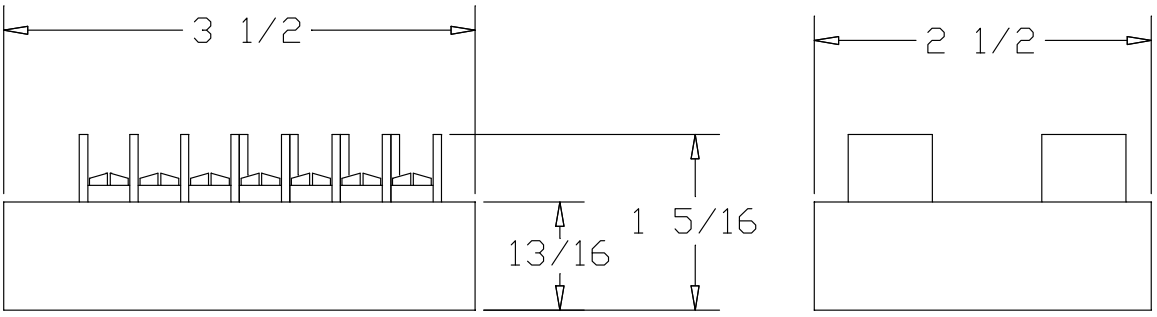

ALTERNATIVE APPLICATIONS

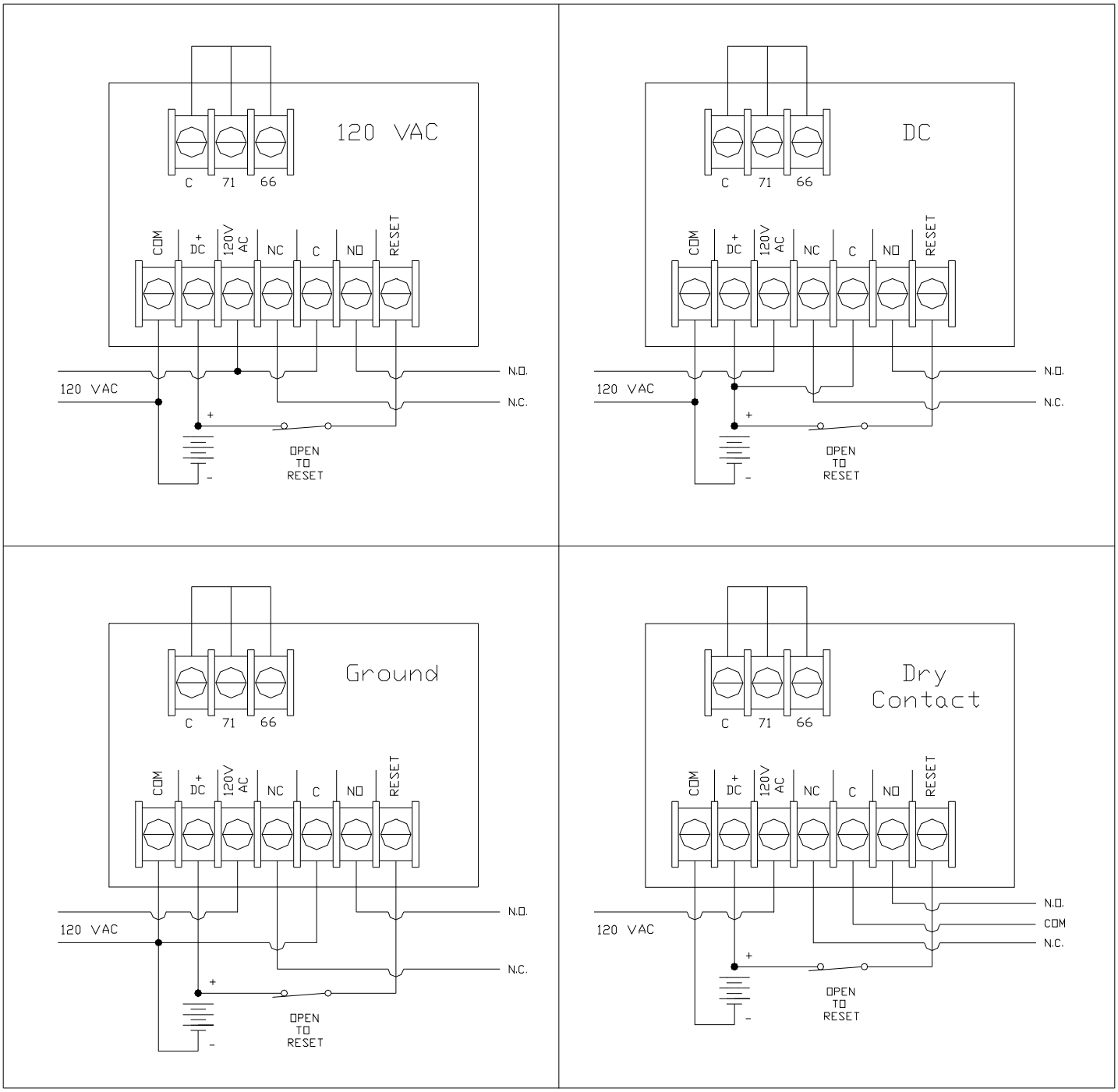

Note: Install jumper between common © and 66 or 71 select trip frequency.

Materials and specifications subject to change without notice.
© Katolight Corporation. 100 Power Drive, Mankato, MN 56001

GOVERNORS AMERICA CORP.

ENGINE GOVERNING SYSTEMS

SSW SERIES

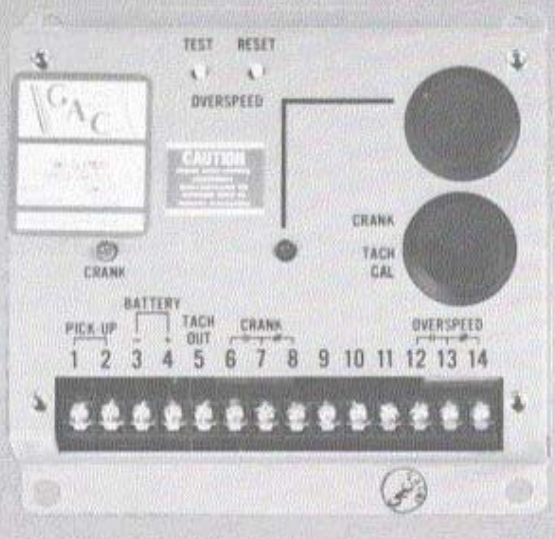

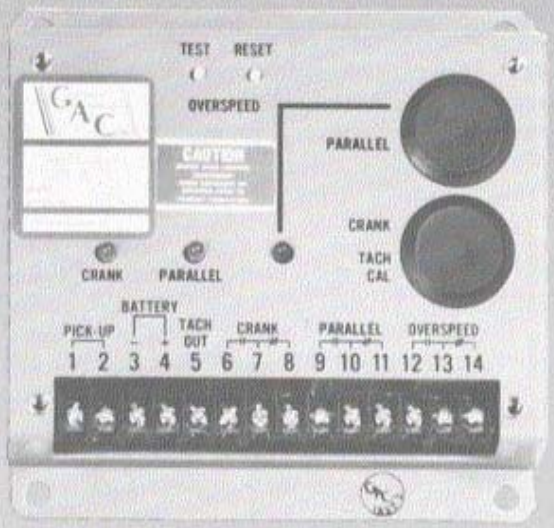

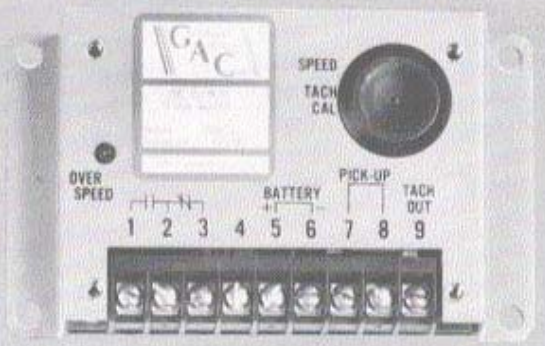

ONE, TWO & THREE ELEMENT SPEED SWITCHES

INCLUDES: SSW674
SSW675
SSW676

MEMBER EGSA Electrical Generating Systems Association

GOVERNORS AMERICA CORP. • 720 Silver St. • Agawam, MA 01001-2907, USA

SSW SERIES
ONE, TWO & THREE ELEMENT SPEED SWITCHES

PRODUCT TECHNICAL INFORMATION

PTI 4010

MARCH 1999

MPC

INTRODUCTION

The Governors America Corporation SSW674, SSW675 and SSW676 are respectively one, two and three element electronic speed switches. They are powered by a DC battery supply and receive engine speed information from a magnetic speed sensor.

Both the SSW675 and SSW676 sense and signal a low speed setting (CRANK termination), and a high speed setting (OVER-SPEED). The SSW676 has a third mid speed setting that can be used for several purposes such as paralleling indication, under-speed, or general auxiliary contacts. The single element SSW674 has a wide range of adjustment and can be used for any one of these three functions.

All speed elements activate discrete, internal relay contacts and LED indicators. The overspeed section of the SSW675 and SSW676 include TEST and RESET switches. An output voltage proportional to engine speed is provided to operate an external tachometer.

SPECIFICATIONS

PERFORMANCE

Input Impedance	Greater than 5K ohms
Response Time	Less than 50 msec
CRANK Termination Set Point Range (SSW675 and SSW676)	300 to 2300 Hz
Set Point Repeatability	5% above 1000 Hz over temperature range
Reset	Automatic or remove power
PARALLEL Set Point Range (SSW676 only)	1600 to 7200 Hz
Set Point Repeatability	1% above 2000 Hz over temperature range
Reset	Automatic at 6% below set point
OVERSPEED Set Point Range (SSW675 and SSW676)	2300 to 10000 Hz
Set Point Repeatability	1% over temperature range
Reset	RESET button or remove power
Test	Lowers set speed by 10%
Tachometer Signal (SSW674 only 0 to 20 mA)	0 to 1 mA (0 to 20 mA units are available)
Set Point Range (SSW674 only)	200 to 10000 Hz
Relay Contact Ratings	5 Amps

POWER INPUT

Supply	10 to 32 Vdc (Reverse voltage protected)
Polarity	Negative Ground, Case Isolated
Power Consumption	300 ma
Magnetic Speed Sensor Signal	0.25 to 120 Vac RMS

ENVIRONMENTAL

Ambient Operating Temperature Range	−40° to +180° F (−40° to +80° C)
Relative Humidity	up to 95%
All Surface Finishes	Fungus proof and corrosion resistant

RELIABILITY

Vibration	5G @ 20 — 500 Hz
Testing	Functionally Tested

PHYSICAL

Dimensions	see Diagram 1 or 2
Weight	SSW674 0.6 lbs. (0.3 kg) SSW675 & SSW676 1.2 lbs. (0.54 kg)
Mounting	Any position

Katolight Service - Master Repair Manual - Page 2244

DESCRIPTION

The SSW Series Speed Switches require DC power and an input speed signal to operate. Engine speed information for the speed switch is usually received from a magnetic speed sensor. Any other signal generating device may be used provided the frequency is proportional to engine speed and meets the input voltage and frequency range specifications.

The speed sensor is typically mounted in close proximity to an engine driven ferrous gear, usually the engine ring gear. As the teeth of the gear pass the magnetic sensor, an AC signal is produced whose frequency is proportional to engine speed.

An amplitude of 0.25 to 120 V RMS is required to allow the speed switch to function within its design specifications. A typical signal of 5 to 10 V RMS is recommended. The speed signal is applied to the PICK-UP terminals as shown in Diagram 1 or 2.

Sharing the magnetic speed sensor with the speed control is permitted provided the signal level meets the specification. Loss of the magnetic speed sensor signal must cause the speed control unit to shut off the engine. All speed switch functions cease when the speed sensor signal is removed.

As engine speed increases, the frequency of the speed sensor signal also increases. As each set point is reached and passed, the corresponding internal relay changes state and its LED illuminates. Each speed setting is independently adjustable with its own 25 turn potentiometer.

On the SSW675 and SSW676, the CRANK speed element latches when its set point has been exceeded. This function can be made to be self resetting, see Adjustment section. The OVERSPEED element latches until the RESET button is pushed or power is removed from the unit. On the SSW676, the PARALLEL element will reset itself after the engine speed has decreased to a level 6% below the PARALLEL set point.

On the SSW675 and SSW676, the TEST button lowers the OVERSPEED set point and confirms the proper operation of this safety feature.

An analog tachometer output signal, from 0 to 1 mA, is available. Adjustment of the output requires a calibrated oscillator or comparison with a standard tachometer on the engine.

WARNING

Speed switches are intended to operate engine speed protection devices. The quality and reliability of the user selected protection devices must be considered to adequately protect equipment and personnel.

APPLICATION AND INSTALLATION INFORMATION

The speed switch is rugged enough to be placed in a control cabinet or engine mounted enclosure with other dedicated control equipment. If water, mist, or condensation is to come in contact with the speed switch, it should be mounted vertically. This will allow any fluid to drain away from the unit.

Extreme heat should be avoided.

The unit is factory set for 24V operation.

SSW674

12V systems require a jumper wire connection between Terminals 4 and 5. See Diagram 2.

SSW675 and SSW676

12V systems require a soldered wire jumper between posts E4 and E5.

32V systems require a soldered wire jumper between posts E4 and E6.

Posts E4, E5, and E6 are accessible through the top cover adjustment hole. See Diagram 1.

Katolight Service - Master Repair Manual - Page 2245

WIRING

When wiring the speed switch into the engine protection control system, proper wire sizes must be used. The speed switch relay contacts are rated for a maximum current of 5 amps. All other connections have less than 1 amp current flow each.

The speed switch can be wired as illustrated in Diagram 1 or 2.

The magnetic speed sensor connections MUST BE TWISTED AND/OR SHIELDED for their entire length. The speed sensor cable shield must only be connected to Terminal 2 on the SSW675 and SSW676, or Terminal 8 on the SSW674. The shield should be insulated to insure that no other part of it comes into contact with engine ground, otherwise stray signals may be introduced into the speed switch.

When the engine is stopped, adjust the gap between the magnetic speed sensor and the ring gear teeth. The gap should not be smaller than 0.020 in. (0.45 mm). Usually, backing out the speed sensor 3/4 turn after touching the ring gear tooth will result in a satisfactory gap. The magnetic speed sensor voltage should be at least 1 V RMS while cranking. During operation, 5 to 10 V RMS is recommended.

Connect the BATTERY supply following the Wiring Diagram being careful to observe polarity.

ADJUSTMENTS

All elements are factory set at the maximum setting. Counterclockwise adjustment will lower the set point.

The tachometer output is factory set at its minimum setting, full CCW. Turning the adjustment CW increases the current output.

CRANK TERMINATION (SSW675 and SSW676)

The unit is factory set for manual reset. To reinitiate engine cranking, battery power must be removed and then reapplied.

Crank the engine and simultaneously turn the CRANK adjustment slowly counterclockwise until the proper crank termination speed is reached. When the cranking termination set point is reached, the green CRANK LED will illuminate.

The unit is factory set for manual rest. To reinitiate engine cranking, battery power must be removed and then reapplied.

Automatic reset when the engine speed falls below the cranking termination set point can be selected by removing the 82 Kohm resistor located between posts E1 and E2 on the circuit board. See Diagram 1.

PARALLEL/AUXILIARY (SSW676 ONLY)

Raise the engine speed to the desired mid speed set point. Turn the PARALLEL adjustment counterclockwise until the parallel relay energizes and the green PARALLEL LED illuminates. The parallel relay will automatically reset when the engine speed falls to 6% below the set point.

OVERSPEED (SSW675 or SSW676)

Raise the engine speed to 10% below the desired overspeed set point. Press and hold the OVERSPEED TEST button on the top of the unit. This lowers the overspeed setting by 10%.

Turn the OVERSPEED adjustment counterclockwise until the overspeed relay energizes and the red OVERSPEED LED illuminates.

Reset the overspeed relay by pressing the RESET button. Allow the engine to stop, then remove battery power from the unit.

Readjust the engine speed to the normal operating speed with the governor speed control.

SSW674 ADJUSTMENT

The range of adjustment of the overspeed set point is from 200 to 10,000 Hz. For settings below 2,500 Hz., solder a jumper wire between the two posts located below the adjustments and to the right.

A. Raise the engine speed to the desired overspeed alarm point.

B. Turn the speed adjustment counterclockwise until the relay energizes and the red overspeed LED lights.

C. Lower the engine speed to the normal operating speed.

The SSW674 is shipped from the factory configured so that the internal relay latches when the set speed is reached. Power must be removed from the unit to reset the relay.

If an automatic reset (nonlatching relay) is desired, cut the jumper wire between the two posts located below the adjustments and to the left. With the jumper removed, the SSW674 relay will reset when the engine speed falls below the set speed.

It is recommended that each speed switch setting be checked periodically when maintenance is being performed on the engine. The overspeed set point can be tested by pressing the TEST button.

Katolight Service - Master Repair Manual - Page 2246

DIAGRAM 1

SSW675 & SSW676
WIRING DIAGRAM AND OUTLINE

Dimensions in inches(mm)

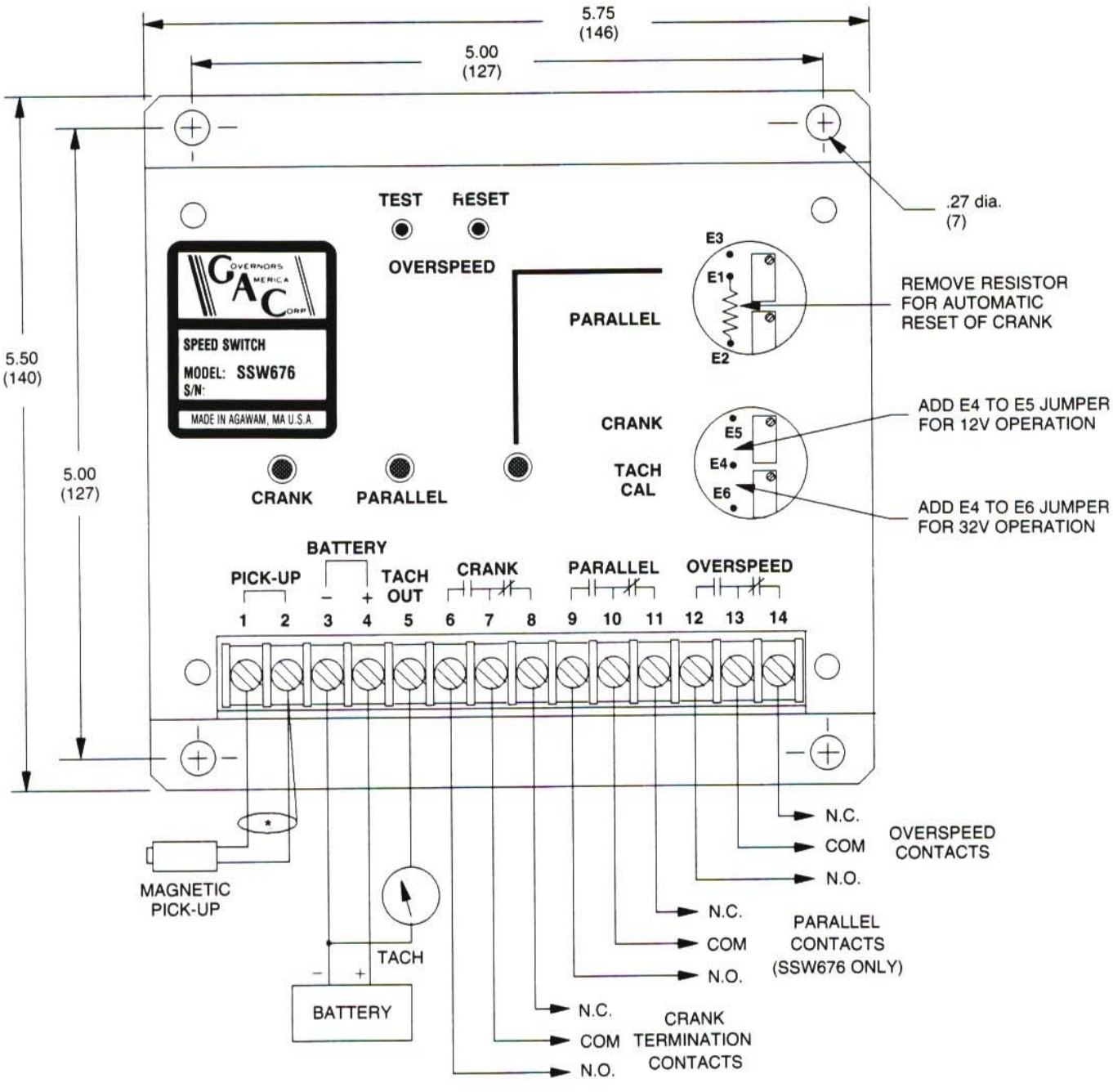

*If Wire Leads Are Longer Than 3 Meters (10 ft.) A Shielded Cable Should Be Used. Ground Shield At One End Only.

WARNING

Speed switches are intended to operate engine protection devices. The quality and reliability of the user selected protection devices must be considered to adequately protect equipment and personnel.

TACHOMETER OUTPUT

The analog tachometer output signal varies proportionally with engine speed. The range of adjustment is 0 – 1 mA from the SSW675/676 and 0 to 20 mA from the SSW674.

Rotate the TACH CAL adjustment clockwise to increase the current, and counter clockwise to decrease the current. Adjust until the speed reading corresponds to a standard tachometer. Stop the engine and adjust the tachometer zero point if necessary. Recheck the maximum setting. If a meter movement less than 1 mA is used, a fixed series resistor is required.

TROUBLESHOOTING

Remove the tachometer connections.

Apply DC power and an input speed signal to the speed switch.

Measure the voltage on the TACH OUT Terminal as the speed input frequency is varied. An increase in frequency should cause a voltage increase.

If the voltage is proportional to frequency, check the wiring to the relays.

If the voltage is not proportional to frequency, check the output of the magnetic speed sensor.

If the speed sensor is operating, and the relays are wired correctly, the unit is defective.

DIAGRAM 2

SSW674
WIRING DIAGRAM AND OUTLINE

Dimensions in inches(mm)

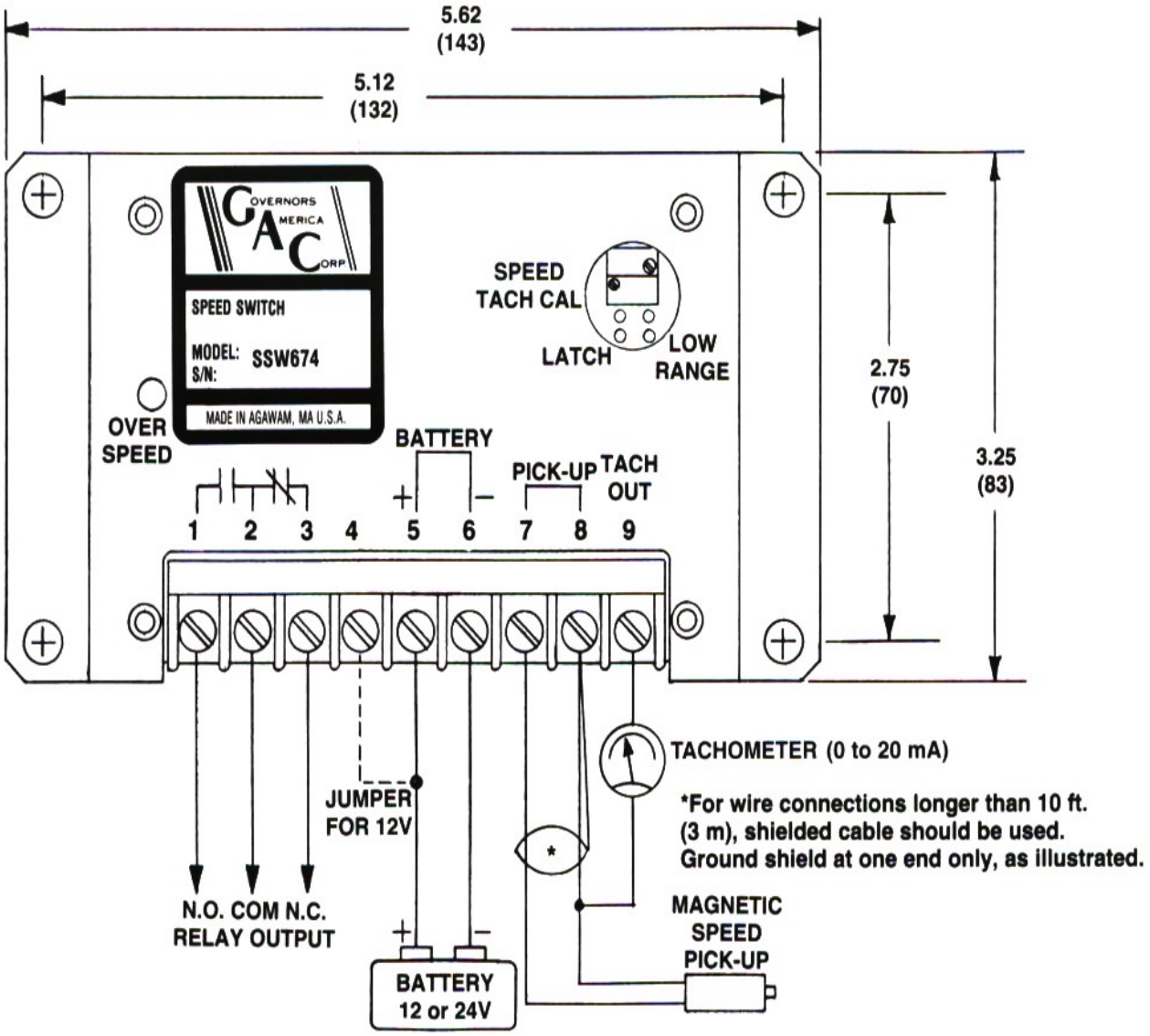

4 Light Annunciator Panel

Repetitive Alarm

HIGHLIGHTS

- Panel face is cold rolled steel flat black paint (14 gauge)
- Up to four extra LEDs are available
- Surface or flush mounting
- Interconnect up to 200' with 20 gauge wire (minimum)

DESCRIPTION

The 4 light annunciator panel is designed for either surface or flush mounting. The annunciator panels are to be used in conjunction with Katolight autostart control KASSEC, KLAS 33 and 61 series.

STANDARD FEATURES

Functional LEDs are audible, visual or both

LED Legend	Condition Indicated	Derangement Signals		Adders Required	
		Audible	Visual	External Contacts	Contact Location
High Engine Temperature	Excessive Water Temperature	YES	YES	N.O.	Engine Control
Low Oil Pressure	Low Lube Oil Pressure	YES	YES	N.O.	Engine Control
Engine Overspeed	Engine Overspeed	YES	YES	N.O.	Engine Control
Engine Overcrank	Generator Set Failed to Start	YES	YES	N.O.	Engine Control

DIAGRAM

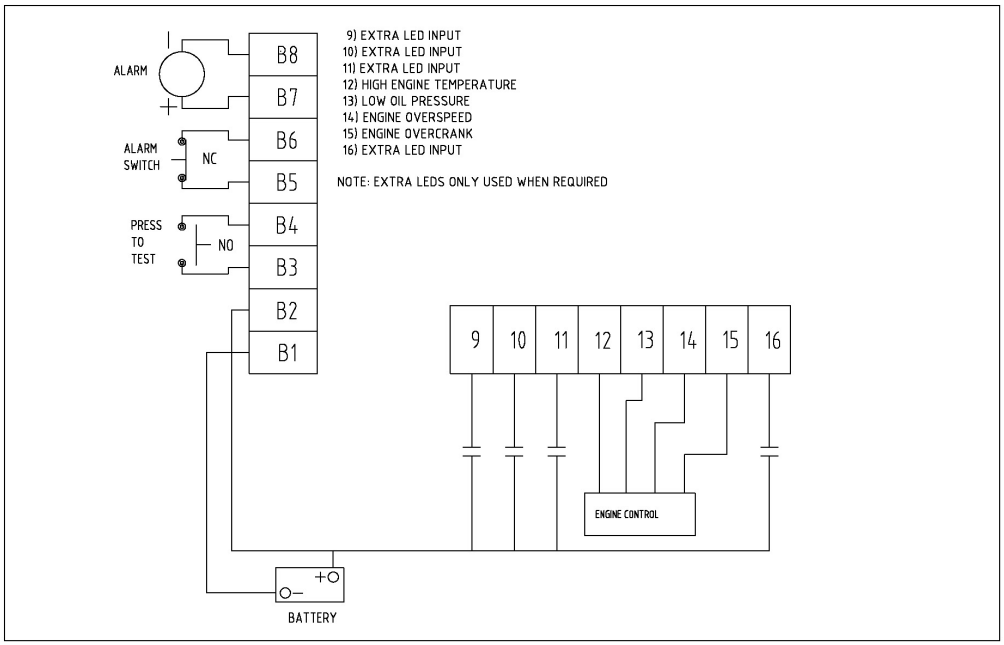

4 Light Annunciator Panel

Repetitive Alarm

DIMENSIONS

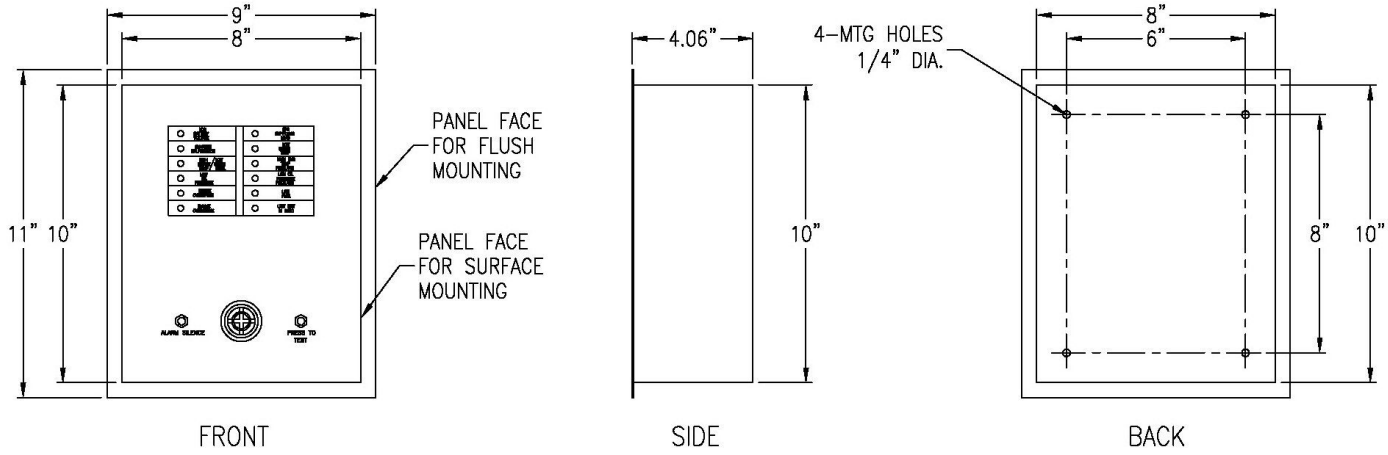

SPECIFICATIONS

Katolight annunciators meet these specifications: The National Electric Code: Section 700-12, standard for emergency and standby power systems. These codes require audible and visual signal devices powered by an electrical storage battery to give warning of derangement or alarm conditions in the alternate electric power source (standby electric generating set). The signal device (ANNUNCIATOR) must be installed outside the standby generating room in a location readily observed by operating personnel at a regular work station. Katolight's control of the repetitive alarm annunciator audible system allows for a first alarm to be silenced and if a second alarm occurs, the audible alarm system will again sound the alarm. Other Codes and Specifications also include these requirements.

Materials and specifications subject to change without notice.
© Katolight Corporation. 100 Power Drive, Mankato, MN 56001

12 Light Annunciator Panel

Repetitive Alarm

KATOLIGHT CORPORATION

HIGHLIGHTS



- Panel face is cold rolled steel flat black paint (14 gauge)
- Up to four extra LEDs are available
- Surface or flush mounting
- Interconnect up to 200’ with 20 gauge wire (minimum)

DESCRIPTION

The 12 light annunciator panel is designed for either surface or flush mounting. The annunciator panels are to be used in conjunction with Katolight autostart control KASSEC, KLAS 33 and 61 series.

STANDARD FEATURES

Functional LEDs are audible, visual or both

LED Legend	Condition Indicated	Derangement Signals		Adders Required	
		Audible	Visual	External Contacts	Contact Location
Low Battery Voltage	Charger Failed	NO	YES	N.O.	Battery Charger
Charger Malfunction	Battery Charger Failed	NO	YES	N.O.	Battery Charger
High Engine Temperature	Excessive Water Temperature	YES	YES	N.O.	Engine Control
Low Oil Pressure	Low Lube Oil Pressure	YES	YES	N.O.	Engine Control
Engine Overspeed	Engine Overspeed	YES	YES	N.O.	Engine Control
Engine Overcrank	Generator Set Failed to Start	YES	YES	N.O.	Engine Control
EPS Supplying Load	Generator Set Carrying Load	NO	YES	N.O.	Transfer Switch
Low Water Temperature	Low Water Jacket Temperature	YES	YES	N.O.	On Engine
High Engine Temp. Prealarm	Water Temp Approaching Limit	YES	YES	N.O.	Panel
Low Oil Pressure Prealarm	Oil Pressure Approaching Limit	YES	YES	N.O.	Panel
Low Fuel	Fuel System Low	YES	YES	N.O.	In Fuel Tank
Unit Not in Auto	Generator Set Not in Automatic	YES	YES	N.O.	Panel On Select Sw.

12 Light Annunciator Panel

Repetitive Alarm

SPECIFICATIONS

Katolight annunciators meet these specifications: The National Electric Code: Section 700-12, standard for emergency and standby power systems. These codes require audible and visual signal devices powered by an electrical storage battery to give warning of derangement or alarm conditions in the alternate electric power source (standby electric generating set). The signal device (ANNUNCIATOR) must be installed outside the standby generating room in a location readily observed by operating personnel at a regular work station. Katolight's control of the repetitive alarm annunciator audible system allows for a first alarm a second alarm occurs, the audible alarm system will again sound the alarm. Other Codes and Specifications also include these requirements.

DIAGRAM

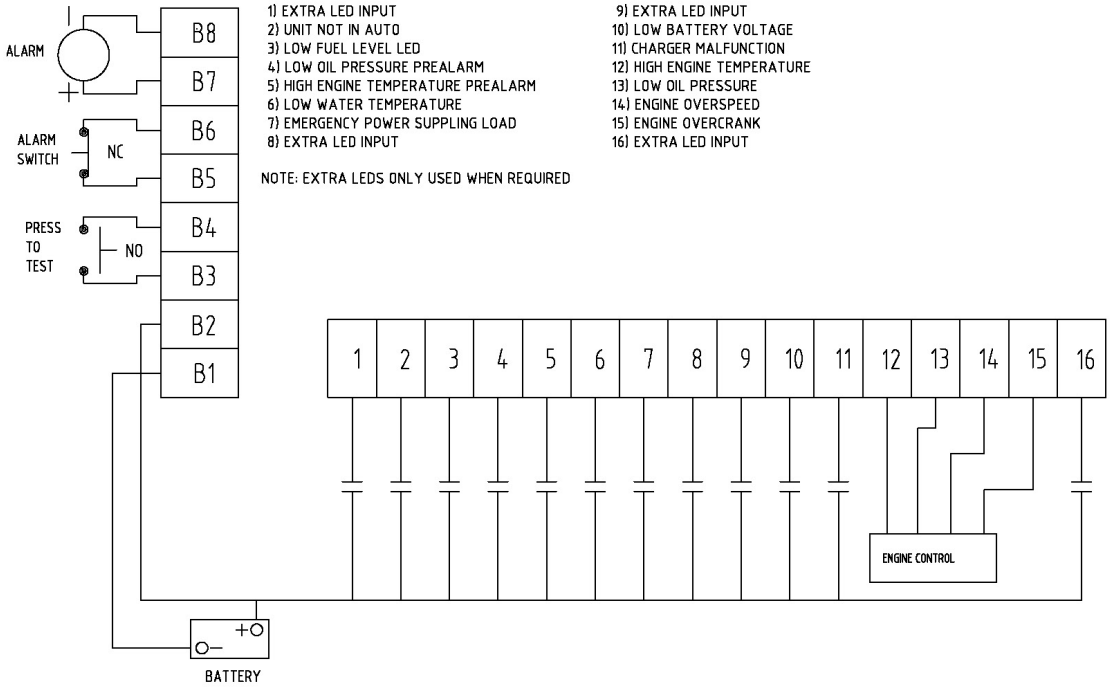

DIMENSIONS

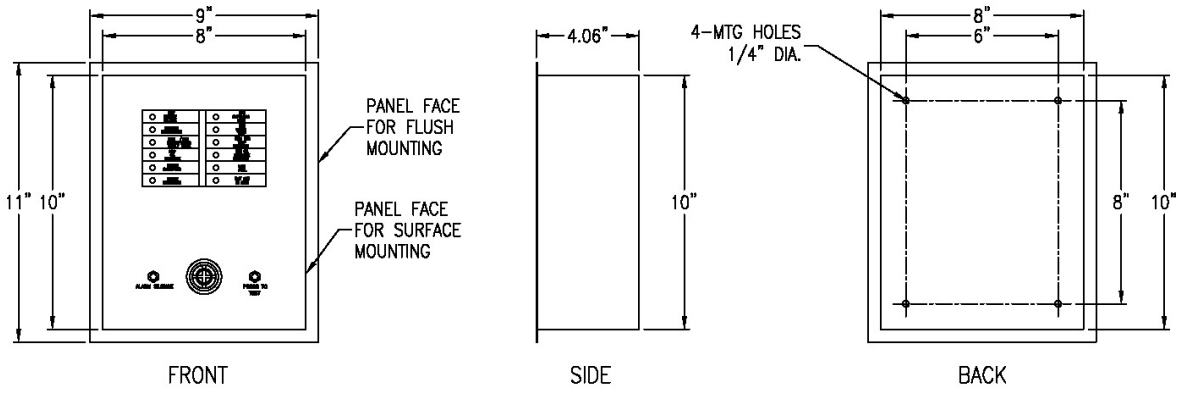

For support or information, call us at 800-325-5450 or visit us at www.katolight.com

Materials and specifications subject to change without notice.
© Katolight Corporation. 100 Power Drive, Mankato, MN 56001

16 Light Annunciator Panel

2-Wire Repetitive Alarm

KATOLIGHT CORPORATION

HIGHLIGHTS



- 12 or 24 Volt
- Panel face is cold rolled steel flat black paint (14 gauge)
- Up to four extra LEDs are available
- Interconnect up to 4000' with Twinaxial shielded computer Cable (*2-Conductor Twisted Pair)

DESCRIPTION

The 16 light annunciator panel is designed for either surface or flush mounting. The annunciator panels are to be used in conjunction with Katolight autostart control KASSEC, KLAS 33 and 61 series.

STANDARD FEATURES

LED Legend	Condition Indicated	Derangement Signals		Adders Required	
		Audible	Visual	External Contacts	Contact Location
Low Battery Voltage	Charger Failed	NO	YES	N.O.	Battery Charger
Charger Malfunction	Battery Charger Failed	NO	YES	N.O.	Battery Charger
High Engine Temperature	Excessive Water Temperature	YES	YES	N.O.	Engine Control
Low Oil Pressure	Low Lube Oil Pressure	YES	YES	N.O.	Engine Control
Engine Overspeed	Engine Overspeed	YES	YES	N.O.	Engine Control
Engine Overcrank	Generator Set Failed to Start	YES	YES	N.O.	Engine Control
EPS Supplying Load	Generator Set Carrying Load	NO	YES	N.O.	Transfer Switch
Low Water Temperature	Low Water Jacket Temperature	YES	YES	N.O.	On Engine
High Engine Temp. Prealarm	Water Temp Approaching Limit	YES	YES	N.O.	Panel
Low Oil Pressure Prealarm	Oil Pressure Approaching Limit	YES	YES	N.O.	Panel
Low Fuel	Fuel System Low	YES	YES	N.O.	In Fuel Tank
Unit Not in Auto	Generator Set Not in Automatic	YES	YES	N.O.	Panel On Select Sw.
4 Spare LEDs					

* Certain applications may require two additional wires for power and ground
** Normally open contacts

16 Light Annunciator Panel

2-Wire Repetitive Alarm

SPECIFICATIONS

Katolight annunciators meet these specifications: The National Electric Code: Section 700-12, and the National Fire Protection Association: Section No. 110, standard for emergency and standby power systems. These codes require audible and visual signal devices powered by an electrical storage battery to give warning of derangement or alarm conditions in the alternate electric power source (standby electric generating set). The signal device (ANNUNCIATOR) must be installed outside the standby generating room in a location readily observed by operating personnel at a regular work station.

In accordance with NFPA 110 the alarm of the annunciator system will not be permanently shut down or bypassed. Katolight's control of the repetitive alarm annunciator audible system allows for a first alarm to be silenced and if a second alarm occurs, the audible alarm system will again sound the alarm. Other Codes and Specifications also include these requirements.

Katolight recommends specific Twinaxial Shielded Computer Cable for 2-wire annunciator applications.

DIAGRAM

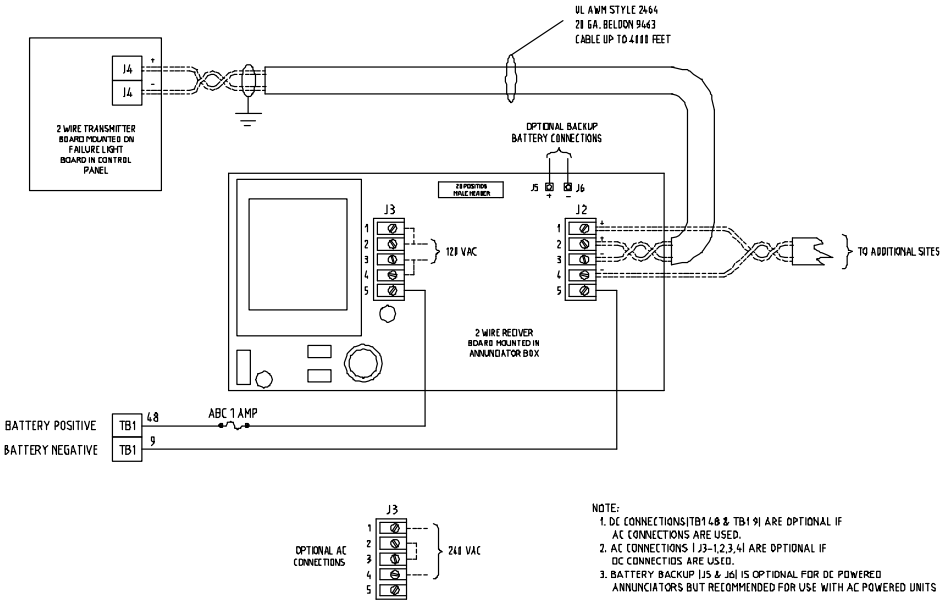

DIMENSIONS

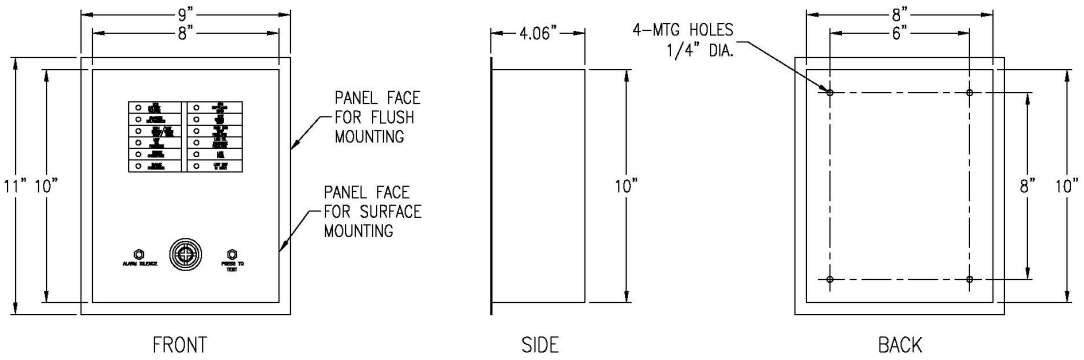

For support or information, call us at 800-325-5450 or visit us at www.katolight.com

Materials and specifications subject to change without notice.
© Katolight Corporation. 100 Power Drive, Mankato, MN 56001

16 Light 2-Wire
Annunciator Interconnect Cable

Katolight Corporation recommends the following cable specifications for **2 Wire Annunciator** applications.

Specifications:
Twinaxial Shielded Computer Cable

Nominal Outside Diameter .243 in 6.17 mm
Nominal Impedance (ohms) 78
7.8 ohms / 1000 ft. 31.0 ohms / 1000 m.
Nominal Capacitance 19.7 pF / ft. 64.6 pF / m.
AWG 20, Stranding 7 x 28
Conductor Diameter .038” tinned copper
PVC Insulation
300V 80º C
UL 2464

Katolight recommends Belden 9463 cable.

WOODWARD

easYlite-100
Annunciator

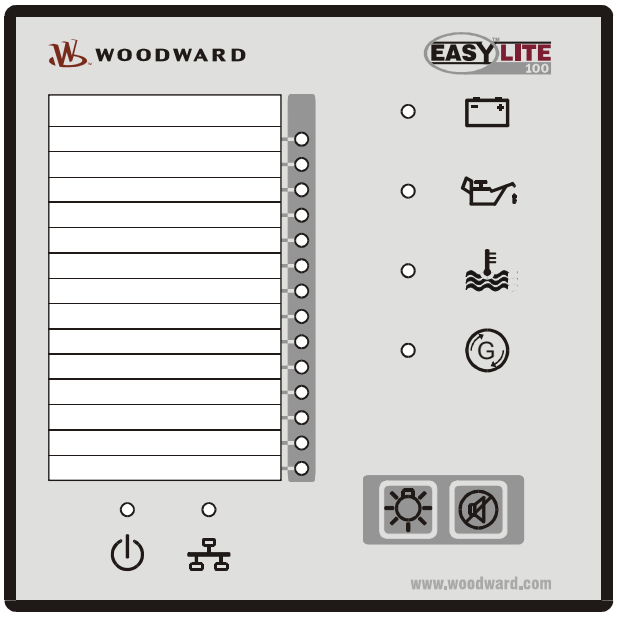

Instruction Manual
Software Version 1.0xxx

Manual 37307



WARNING

Read this entire manual and all other publications pertaining to the work to be performed before installing, operating, or servicing this equipment. Practice all plant and safety instructions and precautions. Failure to follow instructions can cause personal injury and/or property damage.

The engine, turbine, or other type of prime mover should be equipped with an overspeed (overtemperature, or overpressure, where applicable) shutdown device(s), that operates totally independently of the prime mover control device(s) to protect against runaway or damage to the engine, turbine, or other type of prime mover with possible personal injury or loss of life should the mechanical-hydraulic governor(s) or electric control(s), the actuator(s), fuel control(s), the driving mechanism(s), the linkage(s), or the controlled device(s) fail.



CAUTION

To prevent damage to a control system that uses an alternator or battery-charging device, make sure the charging device is turned off before disconnecting the battery from the system.

Electronic controls contain static-sensitive parts. Observe the following precautions to prevent damage to these parts.

- **Discharge body static before handling the control (with power to the control turned off, contact a grounded surface and maintain contact while handling the control).**
- **Avoid all plastic, vinyl, and Styrofoam (except antistatic versions) around printed circuit boards.**
- **Do not touch the components or conductors on a printed circuit board with your hands or with conductive devices.**

Important definitions



WARNING

Indicates a potentially hazardous situation that, if not avoided, could result in death or serious injury.



CAUTION

indicates a potentially hazardous situation that, if not avoided, could result in damage to equipment.



NOTE

Provides other helpful information that does not fall under the warning or caution categories.

Woodward Governor Company reserves the right to update any portion of this publication at any time. Information provided by Woodward Governor Company is believed to be correct and reliable. However, Woodward Governor Company assumes no responsibility unless otherwise expressly undertaken.

© Woodward Governor Company
All Rights Reserved.

Revision History

Rev.	Date	Editor	Change
NEW	05-05-09	TP	Release

Content

CHAPTER 1. GENERAL INFORMATION 6
Related Documents 6
Overview 7

CHAPTER 2. ELECTROSTATIC DISCHARGE AWARENESS 8

CHAPTER 3. HOUSING 9
Dimensions / Panel Cut-Out 9
Installation 10

CHAPTER 4. WIRING DIAGRAM 11

CHAPTER 5. CONNECTIONS 12
Terminal Arrangement 12
Power supply 13
Relay Output 13
Interfaces 14
Overview 14
CAN Bus 15
DPC - Direct Configuration Cable 15

CHAPTER 6. OPERATION 16
Front Panel 16
Operation and Display 17
Purpose of the Status LEDs 17
Purpose of the Buttons 17
Operating the easYlite 17

CHAPTER 7. FUNCTIONAL DESCRIPTION 18
Overview 18
LED Test 18
Silencing the Horn 18
Function of the Pre-Assigned LEDs 19

CHAPTER 8. CONFIGURATION 20
Restoring Default Values 20
Resetting Via LeoPC1 20
Configuration Using the PC 21
Configuration of the Genset Controller 22
easYlite-100 and easYgen-1500 22
easYlite-100, easYgen-1500, and a PLC 23

Katolight Service - Master Repair Manual - Page 2259

CHAPTER 9. PARAMETERS 24
Main Menu 24
Application 25
Comm. Interfaces 28
CAN Interfaces 28
CAN Open RPDO 1 28
Additional C-SDO 28
System 29
Codes 29
Version 30

CHAPTER 10. TECHNICAL DATA 31

APPENDIX A. COMMON 33
Alarm Classes 33

APPENDIX B. FRONT CUSTOMIZATION 34

APPENDIX C. TROUBLESHOOTING 35

APPENDIX D. LIST OF PARAMETERS 36

APPENDIX E. SERVICE OPTIONS 38
Product Service Options 38
Returning Equipment For Repair 38
Packing a Control 39
Return Authorization Number RAN 39
Replacement Parts 39
How To Contact Woodward 40
Engineering Services 41
Technical Assistance 42

 © Woodward

Katolight Service - Master Repair Manual - Page 2260

Illustrations and Tables

Illustrations

Figure 3-1: Housing - panel cut-out 9
Figure 4-1: Wiring diagram – easYlite-100 11
Figure 5-1: easYlite-100 back view - terminal arrangement 12
Figure 5-2: Power supply 13
Figure 5-3: Relay outputs 13
Figure 5-4: Interfaces - overview 14
Figure 5-5: Interfaces - CAN bus 15
Figure 5-6: Interfaces - CAN bus - wiring of shielding 15
Figure 5-7: Interfaces - CAN bus - schematic wiring and termination 15
Figure 6-1: Front panel 16
Figure 7-1: Discrete input for oil pressure sensor 19
Figure 7-2: LED configuration in LeoPC1 19
Figure 10-1: Front panel with paper strip 34

Tables

Table 1-1: Manual - overview 6
Table 3-1: Housing - panel cut-out 9
Table 5-1: Power supply - terminal assignment 13
Table 5-2: Relay outputs - terminal assignment 13
Table 5-3: Interfaces - connection overview 14
Table 5-4: CAN bus - terminal assignment 15
Table 6-1: CAN bus status LED signals 17
Table 8-1: Configuration settings for easYlite-100 and easYgen-1500 - bus parameters 22
Table 8-2: Configuration settings for easYlite-100 and easYgen-1500 - transmission parameters 22
Table 8-3: Configuration settings for easYlite-100 and easYgen-1500 - transmission parameters 23
Table 9-1: Configurable warning/alarm/status messages 26

Katolight Service - Master Repair Manual - Page 2261

Chapter 1.
General Information

Related Documents

Type		English	German
easYlite-100 Series			
easYlite-100 – Manual	this manual ⇨	37307	
easYlite-100 – Brief Manual		37308	
easYgen-1000 Series			
easYgen-1000 – Installation Manual		37320	GR37320
easYgen-1000 – Configuration Manual		37321	GR37321
easYgen-1000 – Operation Manual		37322	GR37322
easYgen-1000 – Interface Manual		37262	GR37262
Additional Manuals			
LeoPC1 – User Manual PC program for configuration, parameter visualization, remote control, data logging, language upload, alarm and user management, and event recorder management. This manual describes the use of LeoPC1 software.		37146	GR37146
LeoPC1 – Engineering Manual PC program for configuration, parameter visualization, remote control, data logging, language upload, alarm and user management, and event recorder management. This manual describes the programming of LeoPC1 software.		37164	GR37164

Table 1-1: Manual - overview

All manuals can be downloaded from the Woodward Publications Server:
http://www.woodward.com/pubs/pubpage.cfm

© Woodward

Katolight Service - Master Repair Manual - Page 2262

Overview

The easYlite-100 Series annunciator provides the following functions:

- Genset control status display
- 14 programmable status display LEDs
- 4 pre-assigned status display LEDs
- 1 CAN bus status display LED
- 1 power supply status display LED
- CAN bus communications to genset control

Type designation is as follows:

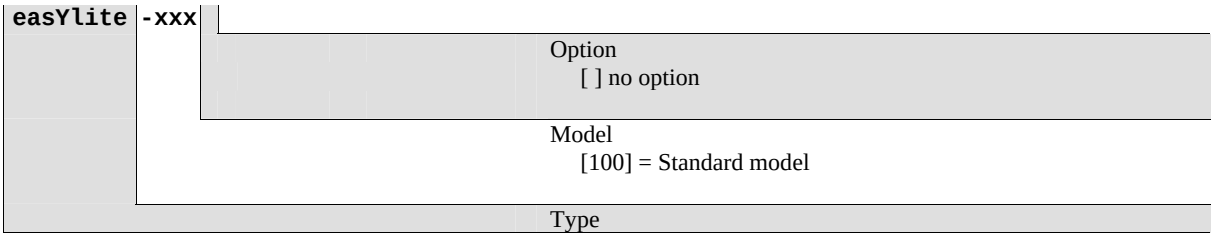

Examples:
easYlite-100 (standard easYlite 100)

Intended Use The unit must only be operated as described in this manual. The prerequisite for a proper and safe operation of the product is correct transportation, storage, and installation as well as careful operation and maintenance.

NOTE

This manual has been developed for a unit fitted with all available options. Inputs/outputs, functions, configuration screens and other details described, which do not exist on your unit may be ignored.

The present manual has been prepared to enable the installation and commissioning of the unit. Because of the large variety of parameter settings, it is not possible to cover every possible combination. The manual is therefore only a guide. In case of incorrect entries or a total loss of functions, the default settings can be taken from the enclosed list of parameters.

Katolight Service - Master Repair Manual - Page 2263

Chapter 2.
Electrostatic Discharge Awareness

All electronic equipment is static-sensitive, some components more than others. To protect these components from static damage, you must take special precautions to minimize or eliminate electrostatic discharges.

Follow these precautions when working with or near the control.

1. Before performing maintenance on the electronic control, discharge the static electricity on your body to ground by touching and holding a grounded metal object (pipes, cabinets, equipment, etc.).

2. Avoid the build-up of static electricity on your body by not wearing clothing made of synthetic materials. Wear cotton or cotton-blend materials as much as possible because these do not store static electric charges as much as synthetics.

3. Keep plastic, vinyl, and Styrofoam materials (such as plastic or Styrofoam cups, cup holders, cigarette packages, cellophane wrappers, vinyl books or folders, plastic bottles, and plastic ash trays) away from the control, the modules, and the work area as much as possible.

4. **Opening the control cover may void the unit warranty.**
   Do not remove the Printed Circuit Board (PCB) from the control cabinet unless absolutely necessary. If you must remove the PCB from the control cabinet, follow these precautions:

   - Ensure that the device is completely de-energized (all connectors must be disconnected).
   - Do not touch any part of the PCB except the edges.
   - Do not touch the electrical conductors, connectors, or components with conductive devices with your hands.
   - When replacing a PCB, keep the new PCB in the protective antistatic bag it comes in until you are ready to install it. Immediately after removing the old PCB from the control cabinet, place it in the protective antistatic bag.



CAUTION

To prevent damage to electronic components caused by improper handling, read and observe the precautions in Woodward manual 82715, *Guide for Handling and Protection of Electronic Controls, Printed Circuit Boards, and Modules.*

© Woodward

Chapter 3.
Housing

Dimensions / Panel Cut-Out

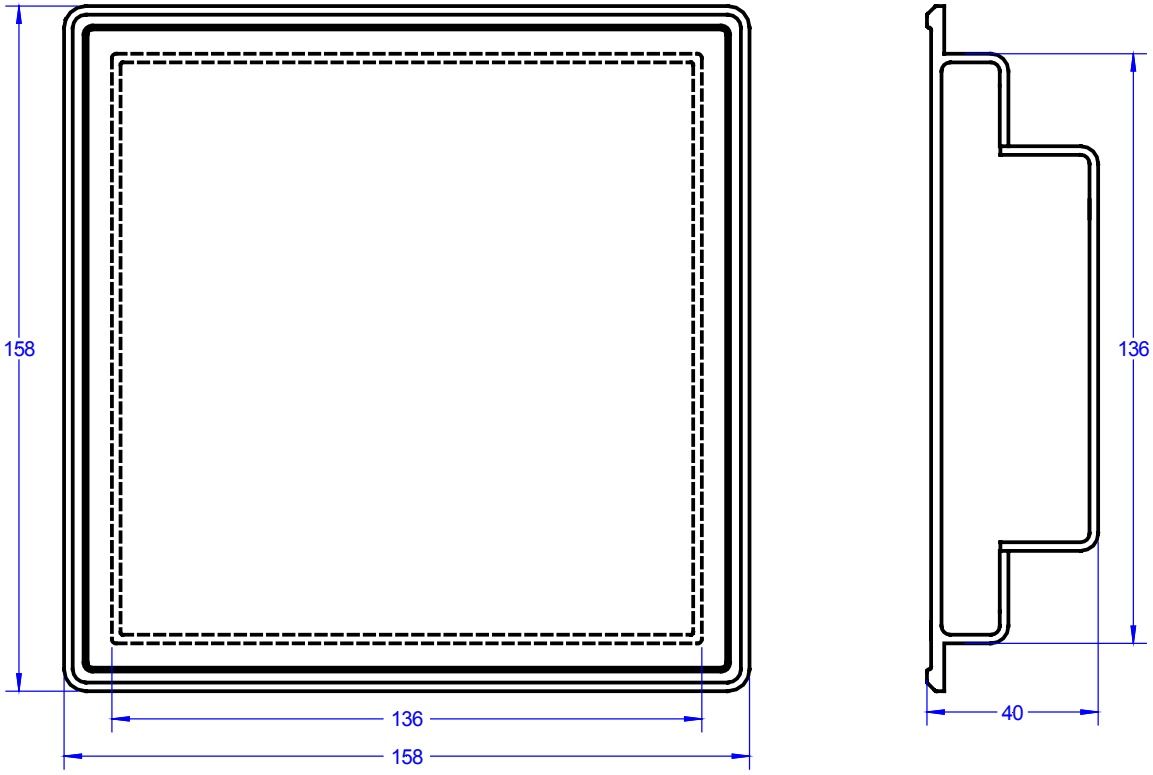

Figure 3-1: Housing - panel cut-out

Description		Dimension	Tolerance
Height	Total	158 mm	---
	Panel cut-out	138 mm	+ 1.0 mm
	Housing dimension	136 mm	
Width	Total	158 mm	---
	Panel cut-out	138 mm	+ 1.0 mm
	Housing dimension	136 mm	
Depth	Total	40 mm	---

Table 3-1: Housing - panel cut-out

Installation

For installation into a door panel, proceed as follows:

1. **Panel cut-out**
   Cut out the panel according to the dimensions in Figure 3-1.

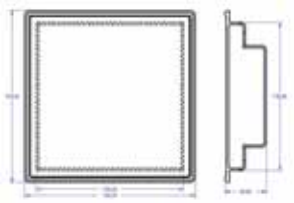

2. **Remove terminals**
   Loosen the wire connection terminal screws on the back of the unit and remove the wire connection terminal strip if required (1).

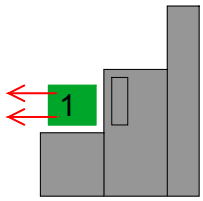

3. **Loosen clamping screws**
   Loosen the four clamping screws (1) until they are almost flush with the clamp inserts and tilt the clamp inserts down by 45° (2) to remove them from the housing. Do not completely remove the screws from the clamp inserts.

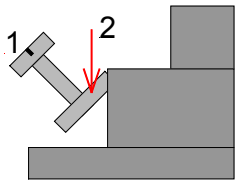

4. **Insert unit into cut-out**
   Insert the unit into the panel cut-out. Verify that the unit fits correctly in the cut-out. If the panel cut-out is not big enough, enlarge it accordingly. Ensure that the gasket is placed properly if used. Ensure that the paper strip is not pinched between gasket and panel to maintain isolation.

5. **Attach clamp inserts**
   Re-install the clamp inserts by tilting the insert to a 45° angle (1). Insert the nose of the insert into the slot on the side of the housing. Raise the clamp insert so that it is parallel to the control panel (2).

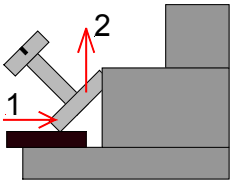

6. **Tighten clamping screws**
   Tighten the clamping screws (1) until the control unit is secured to the control panel (2). Over tightening of these screws may result in the clamp inserts or the housing breaking. Do not exceed the recommended tightening torque of 0.1 Nm.

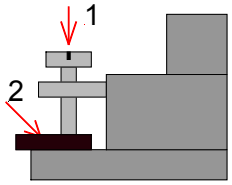

7. **Reattach terminals**
   Reattach the wire connection terminal strip (1) and secure them with the side screws.

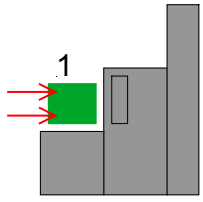

Note: If the gasket is damaged, it needs to be replaced. Use only the original gasket kit (P/N 3050-1057) for replacement.

© Woodward

Chapter 4.
Wiring Diagram

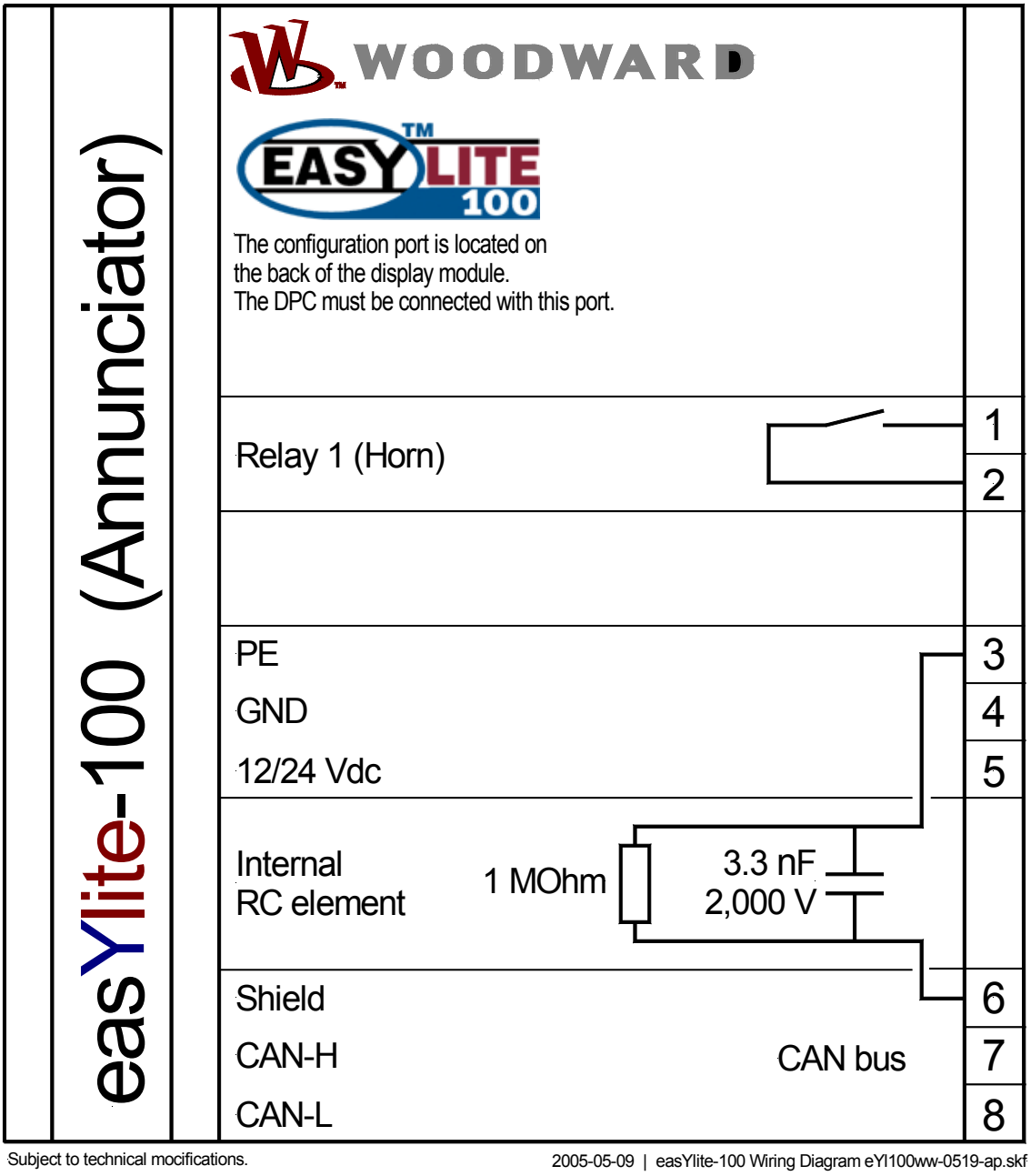

Figure 4-1: Wiring diagram – easYlite-100

Chapter 5.
Connections

Terminal Arrangement

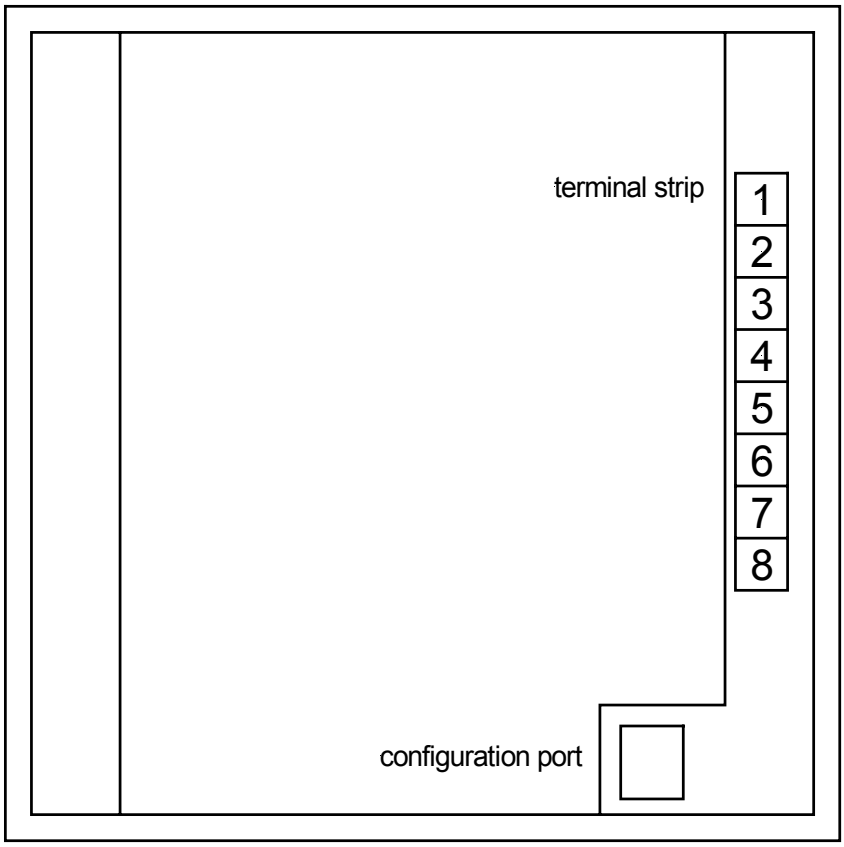

Figure 5-1: easYlite-100 back view - terminal arrangement

© Woodward

Power supply

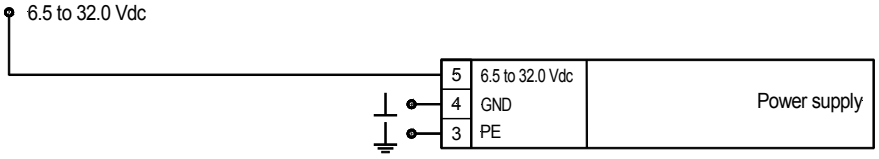

Figure 5-2: Power supply

Terminal	Description	A_{max}
5	12/24 Vdc	2.5 mm²
4	GND	2.5 mm²
3	PE	2.5 mm²

Table 5-1: Power supply - terminal assignment

For a proper operation of the device, a minimum initial voltage of 10.5 Vdc is necessary when switching on the easYlite. After this, a continuous operating voltage between 6.5 and 32.0 Vdc is possible to operate the easYlite safely. The unit is capable of handling voltage drops to 0 V for a maximum of 10 ms.

Relay Output

The easYlite-100 provides one galvanically isolated relay output. The relay output is pre-assigned to the external alarm/horn.

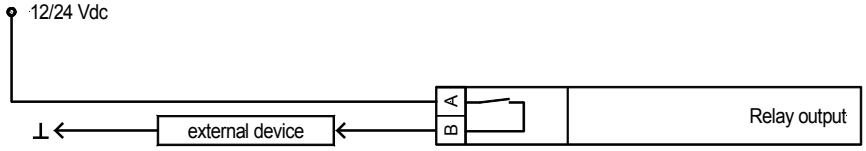

Figure 5-3: Relay outputs

Terminal		Description	A_{max}
Term.	Com.		

A	B		
1	2	Relay 1	2.5 mm²

Table 5-2: Relay outputs - terminal assignment

Katolight Service - Master Repair Manual - Page 2269

Interfaces

Overview

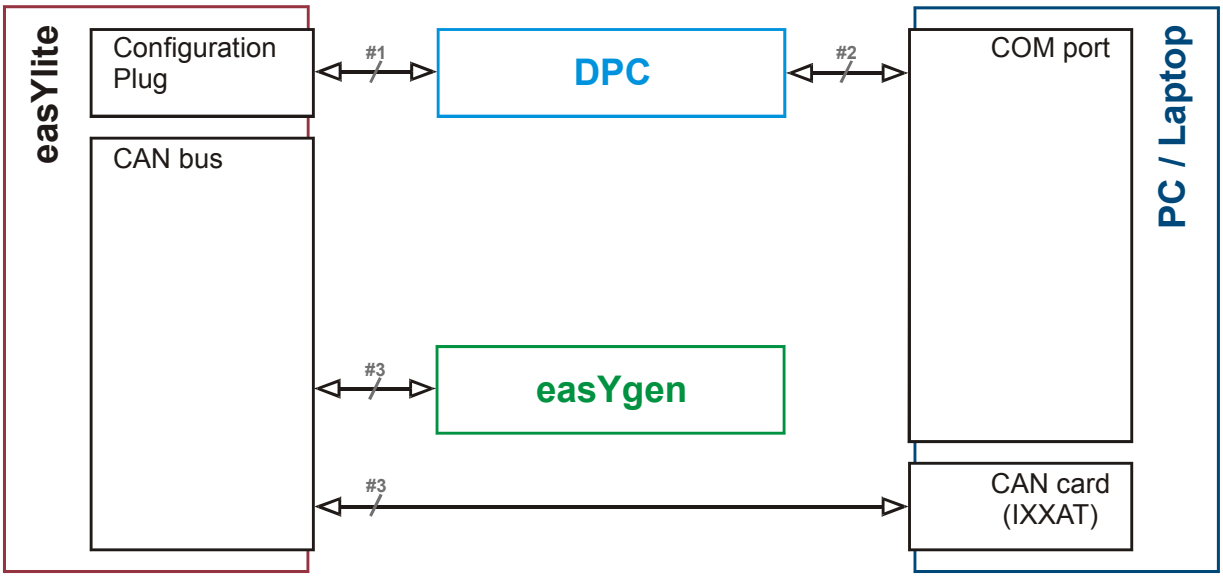

Figure 5-4: Interfaces - overview

No.	Connection from ...	to ...
#1	easYlite [DPC connector]	DPC
#2	DPC	PC [COM-Port]
	PIN 1 ----------	PIN 4 (connect with PIN 8)
	PIN 2 ----------	PIN 3
	PIN 3 ----------	PIN 2
	PIN 4 ----------	PIN 1
	PIN 5 ----------	PIN 5
	N/A ----------	N/A
	PIN 7 ----------	PIN 8 (connect with PIN 4)
	PIN 8 ----------	PIN 7
	PIN 9 ----------	PIN 9
		Connect PIN4/8
#3	easYlite [CAN terminals]	PC [CAN port, submin-D, 9pole, female]
	Terminal 8 - CAN-L ----------	PIN 7 - CAN-H
	Terminal 7 - CAN-H ----------	PIN 2 - CAN-L
	CAN termination resistor between terminals 8/7	CAN termination resistor between terminals 2/7

Table 5-3: Interfaces - connection overview

NOTE

The DPC cable (P/N 5417-557) is intended for service operation only. Do not operate the easYlite-100 with the DPC plugged into the unit during regular operation.

© Woodward

CAN Bus

Wiring

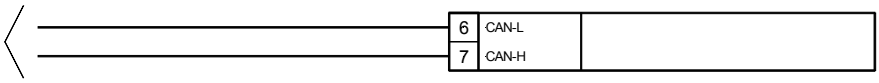

Figure 5-5: Interfaces - CAN bus

Terminal	Description		A_{max}
8	CAN bus	CAN-L	2.5 mm²
7		CAN-H	2.5 mm²
6		Shield	2.5 mm²

Table 5-4: CAN bus - terminal assignment

Shielding

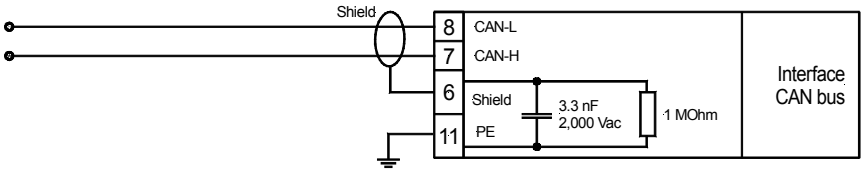

Figure 5-6: Interfaces - CAN bus - wiring of shielding

Please note that the CAN bus must be terminated at each end of the bus! Figure 5-7 is a schematic of the CAN bus with the termination resistors installed.

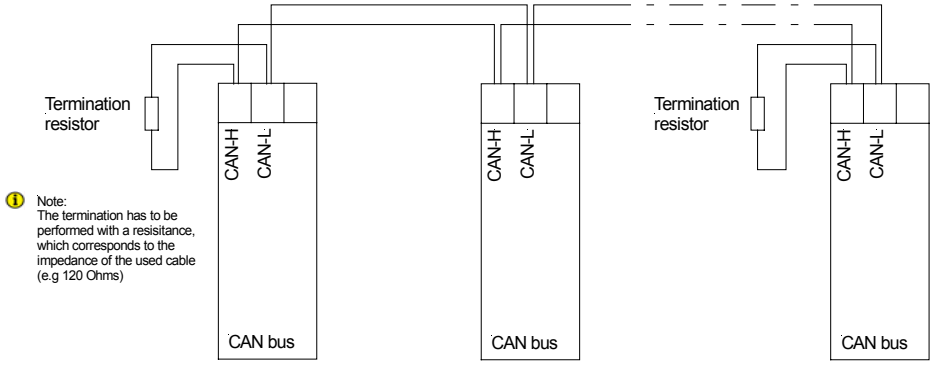

Figure 5-7: Interfaces - CAN bus - schematic wiring and termination

DPC - Direct Configuration Cable

NOTE

Please note that configuration using the direct configuration cable DPC (product number 5417-557) is possible starting with revision B of the DPC (first delivered July 2003). If you have an older model please contact our sales department.

NOTE

The connection cables delivered with the DPC must be used to connect between the control unit and the computer to ensure a proper function of the easYlite. Utilization of an extension or different cable types for the connection between easYlite and DPC can result in a malfunction of the easYlite. This may possibly result in damage to components of the system. If an extension of the data connection line is required, only the serial cable between DPC and notebook/PC may be extended.

Unplug the DPC after configuration to ensure a safe operation!

Katolight Service - Master Repair Manual - Page 2271

Chapter 6.
Operation

Front Panel

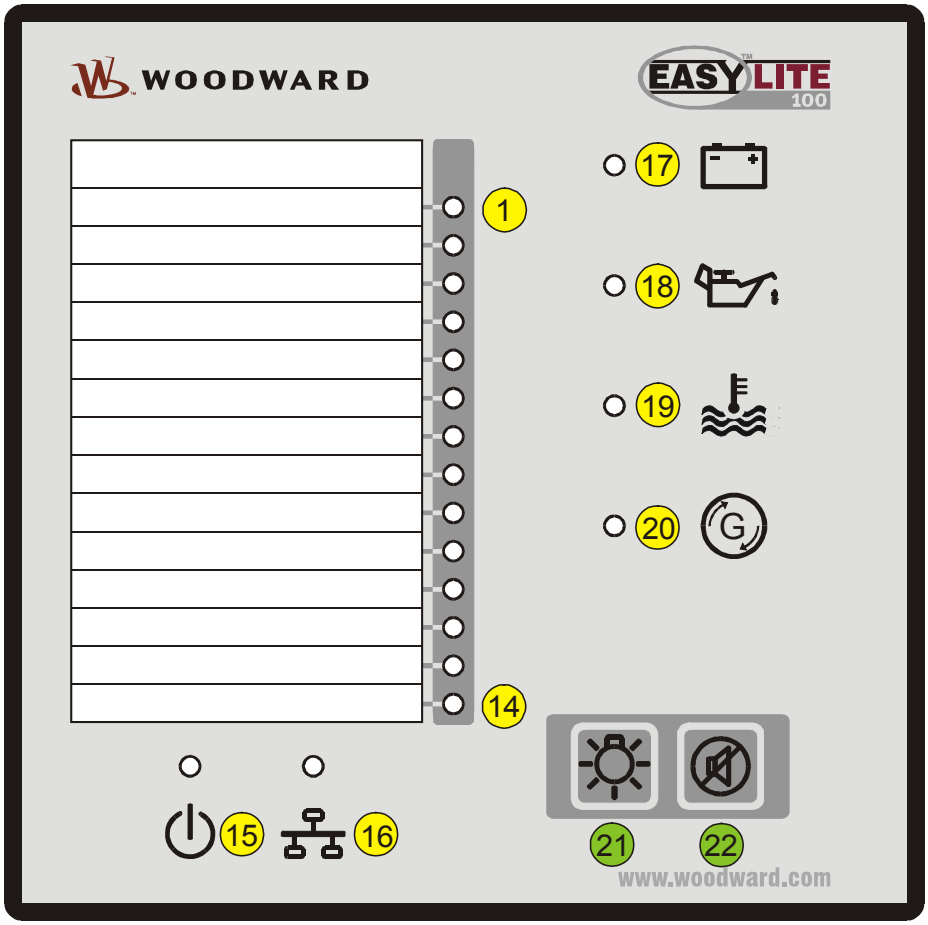

Figure 6-1: Front panel

Figure 6-1 illustrates the front panel which includes push-buttons and LEDs. A short description of the front panel is given below.

1 to 20 **LEDs**

The LEDs indicate operating states of the unit and alarm messages.

21 and 22 **Push-buttons**

The push buttons on the front panel are assigned to fixed functions of the unit.

© Woodward

Operation and Display

Purpose of the Status LEDs

The easYlite has several status LEDs to indicate the operating state. The LEDs indicate the following conditions:

LEDs 1 to 14: 14 separately configurable alarm, warning, and status LEDs (red)

LED 15: Power LED (green)

LED 16: CAN bus status bicolor LED (green/red) for indication of several CAN bus states:

Color	Mode	CANOpen status	Description
green	single flash	STOPPED	CANOpen bus is stopped
green	flashing	PREOPERATIONAL	CANOpen bus is ready for operation
green	on	OPERATIONAL	CANOpen bus is in operation, a connection to the easYlite is established
red	on	Bus off	No bus connection existing
red	quad flash	No easYgen connected	Bus connection is OK, but no PDOs are received from an easYgen

Table 6-1: CAN bus status LED signals

LED 17: Configurable alarm LED for battery alarm (red)

LED 18: Configurable alarm LED for oil pressure alarm (red)

LED 19: Configurable alarm LED for coolant temperature alarm (red)

LED 20: Configurable alarm LED for EPS supplying load indication (red)

Purpose of the Buttons

The easYlite provides two buttons to operate the unit. The buttons have the following functions:

Button 21: Lamp test

Button 22: Horn silence

Operating the easYlite

- When the easYlite annunciator is powered up, LED 15 is illuminated.
- The CAN bus status is indicated by LED 16.
- If a warning, alarm, or operational state is present, which is configured to one of the LEDs 1 through 14, or 17 through 20, the assigned LED will illuminate.
- If the horn is enabled by an alarm condition, it may be silenced with the horn silence button 22.
- A function test of all LEDs may be conducted by pressing the button 21.

Katolight Service - Master Repair Manual - Page 2273

Chapter 7.
Functional Description

Overview

The easYlite annunciator is able to display warning, alarm or status messages of a Woodward genset control remotely (for example in a remote control station). Up to 128 easYlites can be connected to one genset control via a CAN bus. All genset control messages are transmitted permanently to the easYlite via CANopen. One easYlite is able to display 18 different warning, alarm or status messages using freely configurable LEDs.

Furthermore, the easYlite allows to connect a signaling device like a horn via relay 1. The signaling device indicates an alarm issue at the genset and/or a failure of the CAN connection between easYlite and genset control.

Issuing a warning, alarm or status message at the genset control enables the horn bit of the genset control. If the horn bit is assigned to a relay, this relay will be energized when such a message is issued. The relay 1of the easYlite will also be energized if this is configured to "Horn" or "CAN fail or horn".

LED Test

A test of the easYlite LEDs may be performed by pressing button 21. All LEDs must be illuminated in the color indicated under Purpose of the Status LEDs on page 17 while this button is pressed. The bicolor CAN bus status LED 16 must be illuminated yellow (green + red) when it is functioning correctly. The functionality of this button is always enabled.

Silencing the Horn

If a warning, alarm or status message has enabled the horn, this can be silenced by pressing button 22. This disables only the horn bit of the genset control and, if configured, relay 1. A complete acknowledgement of the alarm can only be performed on the genset control. CAN failures, which may result the energizing of relay 1 if configured so, cannot be silenced.

© Woodward

Katolight Service - Master Repair Manual - Page 2274

Function of the Pre-Assigned LEDs

The easYlite has four pre-assigned LEDs which must be configured correctly do indicate the intended warning, alarm or status message. It is not possible to use general standard values since the configuration depends on the individual wiring of the genset control. Therefore, the LEDs have to be configured to the respective discrete or analog inputs using LeoPC1 when commissioning the annunciator.

If the oil pressure sensor is connected to discrete input 3 (refer to Figure 7-1) at the genset control for example, the parameter "Displayed alarm LED18" (LED 18 with oil pressure icon on the front panel, refer to Figure 6-1) must be configured to "Digital input 3" in LeoPC1 (refer to Figure 7-2). Refer to the LeoPC1 manual 37146 for more information.

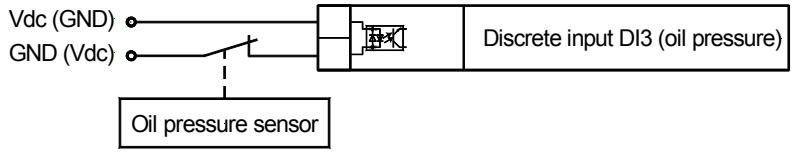

Figure 7-1: Discrete input for oil pressure sensor

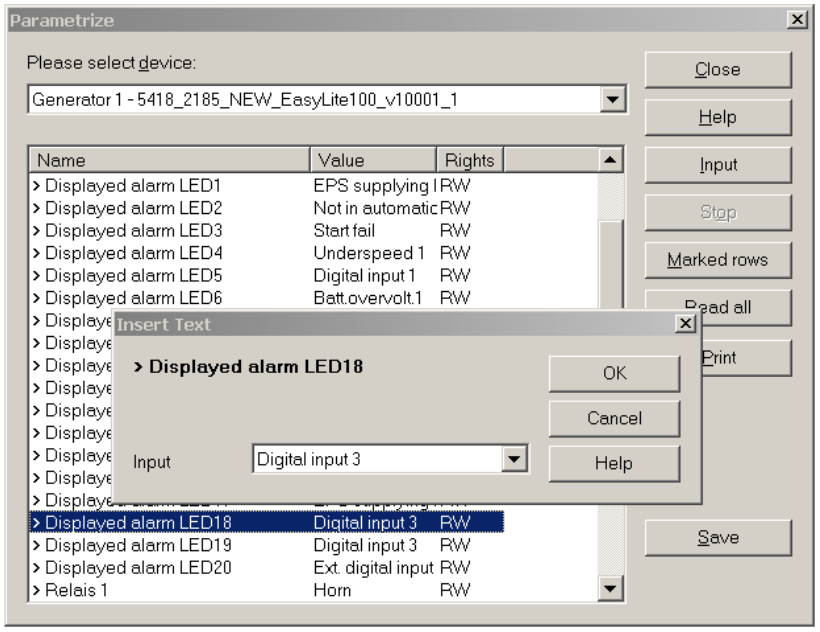

Figure 7-2: LED configuration in LeoPC1

The alarm message indications for battery (LED 17), coolant temperature (LED 19), and EPS supplying load (LED 20) must be configured accordingly.

Katolight Service - Master Repair Manual - Page 2275

Chapter 8.
Configuration

Restoring Default Values

I may be desirable to configure the easYlite from a known state if the unit has been previously configured for another application. Restoring factory default settings can be accomplished easily.

Resetting Via LeoPC1

Connect the easYlite with your PC and start LeoPC1 as described in Configuration Using the PC on page 21.
Set the parameter Factory settings to YES.
Set the parameter Set default values to YES.
The factory default values have been restored.
This can be verified by reading out the values from the unit with the "Read all" button.

© Woodward

Configuration Using the PC

CAUTION

For the configuration of the unit via a PC please use the LeoPC1 software with the following software version:

LeoPC1 3.1 or higher

NOTE

Please note that configuration using the direct configuration cable DPC (product number 5417-557) is possible starting with revision B of the DPC (first delivered July 2003). If you have an older model please contact our sales department.

For configuration of the unit via PC program please proceed as follows:

- Install the LeoPC1 program on your notebook/PC according to the provided user manual 37146. Consider the options that are given during the installation.
- Prior to the completion of the installation you will be prompted to select the language with which you want to start the PC program. The language of LeoPC1 may be changed at any time. The selection of the language refers only to language with which the menus and subprograms that LeoPC1 program works with. This setting will not change the configured language of the control unit.
- After the installation of LeoPC1 has been completed it is necessary to reboot your notebook/PC.
- Establish a connection between your notebook/PC and the control unit via the DPC cable. Insert the RJ45 plug into the RJ45 port on the unit (see DPC - Direct Configuration Cable on page 15 for details) and the serial cable to the COM1 port of your notebook/PC.
- You can now start the PC program as follows:
  - by "Start/Program/Woodward/LeoPC1" (version 3.1 or higher) and opening the respective cfg file, or
  - by a double click on the respective file ending ".cfg" in the subdirectory "/LeoPC1".
  The cfg files differ in their language used. Use the file on the enclosed floppy disk or CD with the language you want, i.e. US for US English or DE for German.
- After the LeoPC1 program has started, establish communication by pressing the F2 button or selecting Communication -> Connect from the menu. This will establish a data link between the control unit and the notebook/PC.
- Start the configuration routine by pressing the F3 button or selecting Devices -> Parameterize from the menu and adjust the parameter of the unit to your application using this manual.

NOTE

Detailed information about LeoPC1 and the utilization of the software may be found in the user manual 37146 belonging to it.

NOTE

The connection cables delivered with the DPC must be used to connect it to ensure a proper function of the easYlite. An extension or utilization of different cable types for the connection between easYlite and DPC may result in a malfunction of the easYlite. This may further result in damage to components of the system. If an extension of the data connection line is required, only the serial cable between DPC and notebook/PC may be extended.

NOTE

Unplug the DPC after configuration to ensure a safe operation! If the DPC remains plugged into the easYlite100 unit, a safe operation of the unit cannot be guaranteed.

Katolight Service - Master Repair Manual - Page 2277

Configuration of the Genset Controller

easYlite-100 and easYgen-1500

Setting the Bus Parameters:

Configure both devices to the following settings:

Parameter	Setting in easYlite	Setting in easYgen
Device number	65	1
Protocol	---	CAN Open
Baudrate	125 kBd	125 kBd
CAN Open Master	---	YES

Table 8-1: Configuration settings for easYlite-100 and easYgen-1500 - bus parameters

NOTE

The baud rate must be configured the same for all participants on one bus.
Each participant must have an individual device number.
The CAN Open Node-ID of the device is the device number.

After a correct CAN bus connection between the easYlite and the easYgen has been established and the same baud rate has been configured, the CAN bus status LED at the easYlite flashes green four times to indicate the missing PDOs.

Data Transmission Settings

Configure the easYlite for CAN Open RPDO (receive PDO) and the easYgen for CAN Open TPDO (transmit PDO) 1, 2, 3, or 4 (default setting 3) according to the following settings:

Parameter	Setting in easYlite	Setting in easYgen
COB-ID	897 dec / 381 hex	897 dec / 381 hex
Transmission type	---	255
Event timer	---	20 ms
1. mapped object	---	3196
2. mapped object	---	0
3. mapped object	---	0
4. mapped object	---	0

Table 8-2: Configuration settings for easYlite-100 and easYgen-1500 - transmission parameters

NOTE

A different COB-ID may be used but the same COB-ID must be used for all devices.

If the above settings have been configured correctly, the easYlite CAN bus status LED will illuminate green. The CAN bus status LED does not indicate whether the data transmitted with the PDO is correct. It only indicates that a PDO is received. In order to test whether the data is correct, energize a discrete input at the easYgen and check the indication of this DI at the easYlite.

© Woodward

Horn Silencing

Configure the easYlite for CAN Open RPDO (receive PDO) according to the following settings:

Parameter	Setting in easYlite	Setting in easYgen
1st Client->Server COB-ID	1537 dec / 601 hex	---
1st Server->Client COB-ID	1409 dec / 581 hex	---
1st Node-ID of the Server	1	---
Max answer time ext. devices	3.0 s	---

Table 8-3: Configuration settings for easYlite-100 and easYgen-1500 - transmission parameters

The COB-IDs are calculated as follows:
1st Client->Server COB-ID = 600 hex + Node-ID (device number) of the easYgen
1st Server->Client COB-ID = 580 hex + Node-ID (device number) of the easYgen

Examples:	Node-ID	1st Client->Server COB-ID	1st Server->Client COB-ID
	1	601 hex	581 hex
	2	602 hex	582 hex
	3	603 hex	583 hex
	and so on …		

After setting these parameters, the horn may be silenced.

easYlite-100, easYgen-1500, and a PLC

The PLC may receive or send data with PDOs to the easYgen.
This enables the PLC to send start/stop signals with a PDO (for details refer to manual 37262).
It is not recommended to write or read easYgen data with the SDO (1st Client->Server COB-ID) because this is used by the easYlite.

The PLC is Not the CAN Open Master

The easYgen starts the communication by setting all devices on the CAN bus to an operational state.
(easYgen setting CAN-Open Master must be configured YES)

The PLC is the CAN Open Master

The PLC must set the easYgen and the easYlite to an operational state.
(easYgen setting CAN-Open Master must be configured NO)

Katolight Service - Master Repair Manual - Page 2279

Chapter 9.
Parameters

The following is a description of the easYlite parameters. Note that these parameters may only be viewed and/or changed through LeoPC1.

Main Menu

NOTE

The following parameter is not configurable. It may be viewed using LeoPC1 for information purposes only.

Random number for password	**display only**

This is a randomly generated number which can be used to calculate the password if it is lost.

The unit is equipped with a multi-level code and configuration hierarchy, which allows different user access to the control. A distinction is made between:

User Level
This code level allows for monitoring of the system and does not permit access to the parameters. Configuration is blocked.

Commissioning Level
Allows direct access to all parameters (displaying and changing). In addition, the user may also set the password for the code levels. This password expires two hours after entering the password and the user is returned to the user level.

Temporary Commissioning Level
Allows direct access to all parameters (displaying and changing). This password expires two hours after entering the password and the user is returned to the user level.

NOTE

Once the code level is entered, access to the configuration menus will be allowed for two hours or until another password is entered into the control. If a user needs to exit a code level then user code level should be entered. This will block any configuration of the control. A user may return to user code level by allowing the entered password to expire after two hours or by changing any one digit on the random number generated on the password screen and entering it into the unit.

By entering "0000" the current password level remains active until another password is entered into the control unit.

Password CAN	**0000 to 9999**

The password for enabling access through the CAN interface must be entered here.

Password RS232/DPC	**0000 to 9999**

The password for enabling access through the serial interface or direct configuration must be entered here.

© Woodward

Katolight Service - Master Repair Manual - Page 2280

Application

Display alarm LED [x] **one message from list**

One warning/alarm/status message from the message list in Table 9-1 can be assigned to the alarm LED [x] here. The LED [x] will be illuminated if the assigned warning/alarm/status is detected.

[x] = 1 to 14

Display alarm LED 17 **one message from list**

One warning/alarm/status message from the message list in Table 9-1 can be assigned to the alarm LED 17 here. The LED 17 will be illuminated if the assigned warning/alarm/status is detected.

Note: A battery related alarm must be configured to this LED to comply with the battery icon on the front panel.

Warning/alarm/status message	Description
EPS supplying load	Genset is running and breaker is closed
Not in automatic mode	easYgen is not in automatic mode
CAN fail	A CAN connection failure occurred
Horn	An alarm is triggered at the genset control
Centralized alarm	easYgen alarm classes B to F
Stopping alarm	easYgen alarm classes C to F
Warning alarm	easYgen alarm classes A and B
Gen.overfreq. 1	Alarm messages of the generator monitoring
Gen.overfreq. 2	
Gen.underfreq. 1	
Gen.underfreq. 2	
Gen.overvolt. 1	
Gen.overvolt. 2	
Gen.undervolt. 1	
Gen.undervolt. 2	
Gen. overcurr. 1	
Gen. overcurr. 2	
Gen. overcurr. 3	
Gen. Rv/Rd pow.1	
Gen. Rv/Rd pow.2	
Gen. Overload 1	
Gen. Overload 2	
Unbal. load 1	
Unbal. load 2	
Gen. asymmetry	
Ground fault 1	
Ground fault 2	
Gen. phase rot. misw.	
Inv.time ov.curr.	
Timeout dead bus start	
Mains phase rot. misw.	Genset alarm message of the mains monitoring
GCB fail to close	Various alarm bits of the genset
GCB fail to open	
MCB fail to close	
MCB fail to open	
Overspeed 1	
Overspeed 2	
Underspeed 1	
Underspeed 2	
Speed det. alarm	
Start fail	
Shutdwn malfunct.	
Unintended stop	

Katolight Service - Master Repair Manual - Page 2281

Warning/alarm/status message	Description
Batt.undervolt.1	Alarm bits of the analog inputs
Batt.undervolt.2	
Batt.overvolt.1	
Batt.overvolt.2	
CAN Open Fault	Various alarm bits of the genset
CAN-Fault J1939	
Digital input 1	Alarm messages triggered by discrete inputs at the genset
Digital input 2	
Digital input 3	
Digital input 4	
Digital input 5	
Digital input 6	
Digital input 7	
Digital input 8	
Ext. digital input 1	Alarm messages triggered by external discrete inputs at the genset by connecting IKDs
Ext. digital input 2	
Ext. digital input 3	
Ext. digital input 4	
Ext. digital input 5	
Ext. digital input 6	
Ext. digital input 7	
Ext. digital input 8	
Ext. digital input 9	
Ext. digital input 10	
Ext. digital input 11	
Ext. digital input 12	
Ext. digital input 13	
Ext. digital input 14	
Ext. digital input 15	
Ext. digital input 16	
Mainten. days exceeded	Various alarm bits of the easYgen
Mainten. hours exceeded	
Lv1: Analog inp. 1	Alarm messages triggered by analog inputs at the genset
Lv2: Analog inp. 1	
Lv1: Analog inp. 2	
Lv2: Analog inp. 2	
Wb: Analog inp. 1	
Wb: Analog inp. 2	
Firing speed	

Table 9-1: Configurable warning/alarm/status messages

A detailed description of these warning/alarm or status messages can be found in the easYgen-1000 Operation manual 37181 in Appendix A.

Display alarm LED 18 **one message from list**

One warning/alarm/status message from the message list in Table 9-1 can be assigned to the alarm LED 18 here. The LED 18 will be illuminated if the assigned warning/alarm/status is detected.

Note: An oil pressure related alarm must be configured to this LED to comply with the oil pressure icon on the front panel.

Display alarm LED 19 **one message from list**

One warning/alarm/status message from the message list in Table 9-1 can be assigned to the alarm LED 19 here. The LED 19 will be illuminated if the assigned warning/alarm/status is detected.

Note: An coolant temperature related alarm must be configured to this LED to comply with the oil temperature icon on the front panel.

© Woodward

Katolight Service - Master Repair Manual - Page 2282

Display alarm LED 20 **one message from list**

One warning/alarm/status message from the message list in Table 9-1 can be assigned to the alarm LED 20 here. The LED 20 will be illuminated if the assigned warning/alarm/status is detected.

Note: EPS supplying load must be configured to this LED to comply with the coolant temperature icon on the front panel.

Relay 1 **Horn / CAN fail / CAN fail or horn**

The functionality of relay 1 is configured here.

Horn..... The relay 1 will be energized when an alarm is issued at the genset control.
CAN fail..... The relay 1 will be energized when a CAN connection failure occurs.
CAN fail or horn.... The relay 1 will be energized when an alarm is issued at the genset control or a CAN connection failure occurs.



NOTE

If the relay is configured to "Horn" or "CAN fail or horn", relay 1 will be energized with any occurring genset alarm regardless whether the alarm is assigned to an easYlite LED or not. It is recommended to assign the configurable alarm message "Horn" to one of the easYlite LEDs to prevent an enabling of the horn without an alarm indication at the easYlite!

Katolight Service - Master Repair Manual - Page 2283

Comm. Interfaces

CAN Interfaces

Device number	1 to 128

The CAN bus device number is configured here. Each participant on the CAN bus needs an individual device number.

Baudrate	20/50/100/125/250/500/800/1000 kBd

The CAN bus baud rate is configured here. The baud rate must be configured the same for all participants on the CAN bus.

Producer heartbeat time	0 to 65530

The producer heartbeat time is configured here.

CAN Open RPDO 1

COB-ID	1 to 4294967295

The CAN ID on which the data is received is configured here. The same ID must be configured as TPDO (Transmit PDO) in the easYgen (refer to Configuration of the Genset Controller starting on page 22).

Additional C-SDO

1st Client->Server COB-ID	1408 to 4294967295

The 1st client -> server COB ID is configured here.

1st Server->Client COB-ID	1408 to 4294967295

The 1st server -> client COB ID is configured here.

1st Node-ID of the Server	1 to 127

The 1st node ID of the server is configured here.

Max answer time ext. devices	1 to 99

The maximum answer time of external devices is configured here. If the acknowledge message of the easYlite is not replied within this time, it will be repeated.

NOTE

Refer to Configuration of the Genset Controller on page 22 for detailed information about the configuration of the easYlite and the connected genset controller.

© Woodward

Katolight Service - Master Repair Manual - Page 2284

System

Codes

Code level CAN port **display only**

This value displays the code level which is currently selected for the access via the CAN bus.

Code level serial port / DPC **display only**

This value displays the code level which is currently selected for the access via the serial RS-232 (DPC) interface.

NOTE

The following passwords are valid for all access possibilities (via serial RS-232 (DPC) interface and via CAN bus). The passwords can be used for the access control systems of the different configuration access methods.

Commissioning level code **0000 to 9999**

The password for the commissioning code level is configured here.

Temp. commissioning level code **0000 to 9999**

The password for the temporary commissioning code level is configured here. The temporary commissioning code level allows the same configurations like the commissioning code level except the change of passwords.

Factory settings **YES/NO**

This parameter enables the easYlite to have the factory default setting restored.

YES.....The unit will be prepared for resetting to factory settings.
NO.....The unit will not be prepared for resetting to factory settings.

Set default values **YES/NO**

This parameter restores the factory default settings.

YES.....The unit will be reset to factory settings.
NO.....The unit will not be reset to factory settings.

Katolight Service - Master Repair Manual - Page 2285

Version

NOTE

The following parameters are not configurable. They may be viewed using LeoPC1 for information purposes only.

Serial number	**display only**

This is the serial number of the easYlite and identifies the unit.

Boot item number	**display only**

This is the item number of the firmware, which is stored on the easYlite.

Boot revision	**display only**

This is the revision of the firmware, which is stored on the easYlite.

Boot version	**display only**

This is the version (Vx.xxxx) of the firmware, which is stored on the easYlite.

Program item number	**display only**

This is the item number of the application software of the easYlite.

Program revision	**display only**

This is the revision of the application software of the easYlite.

Program version	**display only**

This is the version (Vx.xxxx) of the application software of the easYlite.

© Woodward

Katolight Service - Master Repair Manual - Page 2286

Chapter 10.
Technical Data

Name plate

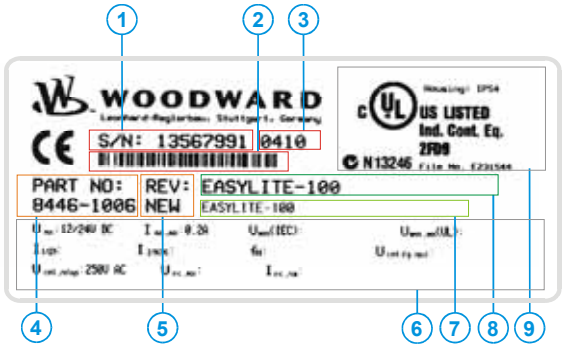

(Example for a typical name plate)

1	S/N	Serial number (numerical)
2	S/N	Serial number (Barcode)
3	S/N	Date of production (YYMM)
4	P/N	Item number
5	REV	Item revision number
6	Details	Technical data
7	Type	Unit name
8	Type	Extended description
9	UL	UL sign (pending)

Ambient variables

- Power supply ..... 12/24 Vdc (6.5 to 32.0 Vdc)
- Intrinsic consumption ..... max. 3 W
  Battery minus must be grounded
- Ambient temperature
  Storage ..... -20 to +85 °C / -4 to +185 °F
  Operation..... -20 to +70 °C / -4 to +158 °F
- Ambient humidity..... 95 %, non condensing

Relay outputs ---------- potential free

- Contact material..... AgCdO
- General purpose (GP) ($V_{Cont, relay output}$) DC.....2.00 Adc@24 Vdc
- Pilot duty (PD) ($V_{Cont, relay output}$) DC.....1.00 Adc@24 Vdc

Interface

Service interface.....**non isolated**

- Version RS-232
- Signal level 5V
  Level conversion and insulation by using DPC (P/N 5417-557)

CAN bus interface .....**isolated**

- Insulation voltage .....500 Vdc
- Version .....CAN bus
- Internal line termination ..... not available
- Internal cable screen connection with Ground (terminal 3) ..... RC element (1MΩ; 3.3 nF)

Katolight Service - Master Repair Manual - Page 2287

Housing ----------

- Type ..... Woodward easYpack 158x158
- Dimensions (W × H × D) ..... 158 × 158 × 40 mm
- Front cutout (W × H) ..... 138 [+1.0] × 138 [+1.0] mm
- Connection ..... screw and plug terminals 2.5 mm²
- Recommended tightening torque
  Connectors ..... 0.5 Nm
  Housing clamps ..... 0.1 Nm
  use only 60/75 °C copper leads
  use only class 1 cables (or similar)
- Weight ..... approx. 450 g

Protection ----------

- Protection system ..... IP54 from front with proper installation with gasket pending
- Front folio ..... insulating surface

Approvals ---------- **pending**

- EMC test (CE) ..... tested according to applicable EN guidelines
- Listings ..... CE (pending); UL listing for ordinary locations (pending)
- Type approval ..... UL/cUL (pending), Ordinary Locations, File No.: 231544

© Woodward

Katolight Service - Master Repair Manual - Page 2288

Appendix A. Common

Alarm Classes

The easYlite does not generate alarms. It only displays alarms generated by the easYgen genset control. The easYgen distinguishes between the following alarm classes:

Alarm class	Visible in the display	LED "Alarm" & horn	Relay "Command: open GCB"	Shut-down engine	Engine blocked until ack. sequence has been performed
A	**yes**	**no**	**no**	**no**	**no**
	Warning Alarm This alarm does not interrupt the unit operation. A message output without a centralized alarm occurs: ⇨ Alarm text.				
B	**yes**	**yes**	**no**	**no**	**no**
	Warning Alarm This alarm does not interrupt the unit operation. An output of the centralized alarm occurs: ⇨ Alarm text + flashing LED "Alarm" + Relay centralized alarm (horn).				
C	**yes**	**yes**	**following power reduction** not available in the easYgen-1000	**after cooling phase**	**yes**
	Responding Alarm With this alarm the GCB is opened and the engine is stopped. Coasting occurs. ⇨ Alarm text + flashing LED "Alarm" + Relay centralized alarm (horn) + Coasting + GCB open + Engine stop.				
D	**yes**	**yes**	**immediately**	**after cooling phase**	**yes**
	Responding Alarm With this alarm the GCB is opened and the engine is stopped. Coasting occurs. ⇨ Alarm text + flashing LED "Alarm" + Relay centralized alarm (horn) + Coasting + GCB open + Engine stop.				
E	**yes**	**yes**	**following power reduction** not available in the easYgen-1000	**immediately**	**yes**
	Responding Alarm With this alarm the GCB is opened immediately and the engine is stopped. ⇨ Alarm text + flashing LED "Alarm" + Relay centralized alarm (horn)+ GCB open + Engine stop.				
F	**yes**	**yes**	**immediately**	**immediately**	**yes**
	Responding Alarm With this alarm the GCB is opened immediately and the engine is stopped. ⇨ Alarm text + flashing LED "Alarm" + Relay centralized alarm (horn)+ GCB open + Engine stop.				

Katolight Service - Master Repair Manual - Page 2289

Appendix B.
Front Customization

The easYlite-100 series is designed to be adapted to any desired language and can be customized to your demands using a paper strip. The paper strip is intended for labeling the configurable LEDs.

The paper strip is divided into 14 lines, one for each LED. You can customize the paper strip to reflect the warning/alarm/status message configured to the respective LED in the desired language.

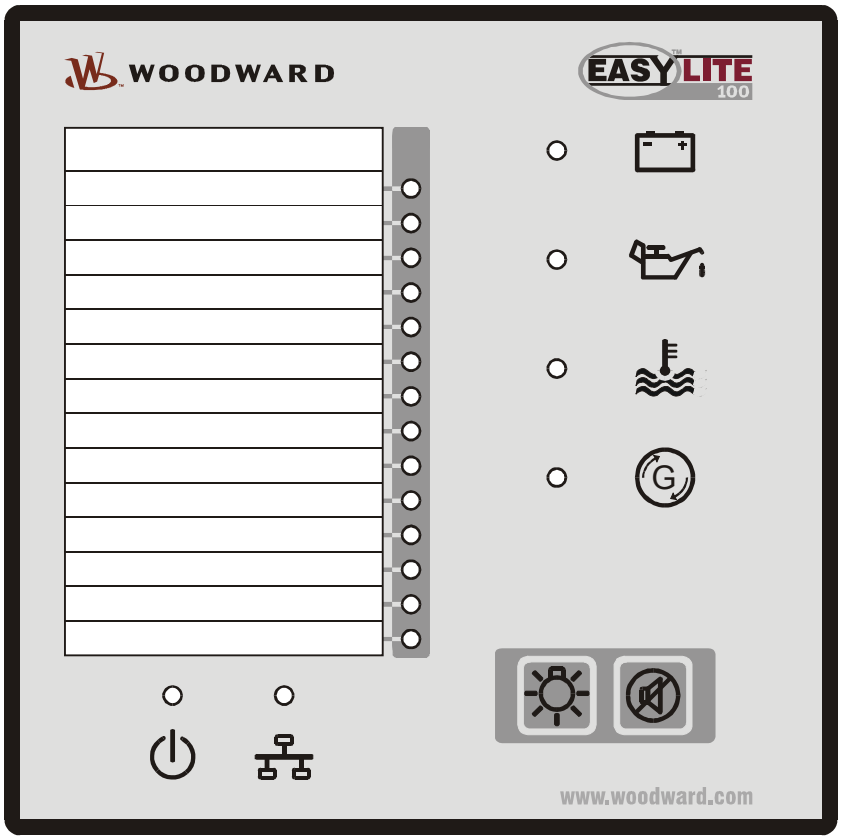

Figure 10-1: Front panel with paper strip

The unit is delivered with an English paper strip with the factory default messages which are assigned to the LEDs.

Templates for paper strips in different languages can be found in the "Paper Strips" directory on the CD delivered with the unit. The templates are in Microsoft Word format and can be customized to your requirements. Please note that the paper strip size must not be modified in the templates. Just edit the text for the paper strips, print them out, cut out the paper strips where indicated, and insert them into the openings at the side of the unit.

© Woodward

Appendix C. Troubleshooting

If problems are encountered while commissioning or operating the easYlite-100, please refer to the troubleshooting table below and LeoPC1 prior to contacting Woodward for technical assistance. The most common problems and their solutions are described in the troubleshooting table. If problems are encountered between the easYlite-300 and its wiring and the engine or other devices, refer to the respective manuals for solving the problem.

Symptom	Possible cause	Possible solution	Verify
Unit does not power up (power LED is not illuminated).	Power supply outside operating range.	With power supply voltage connected to terminals 5(+) and 4(-) of the easYlite-100, measure the voltage at these terminals.	Voltage must be no less than 6.5 Volts and no greater than 32 Volts.
	Power supply polarity reversed.	With power supply voltage connected to terminals 5(+) and 4(-) of the easYlite-100, measure the voltage at these terminals.	Voltage measurement reads (+) polarity when meter is connected to terminal 5(+) and 4(-).
	Power supply not connected.	Connect the correct power supply to terminals 5(+) and 4(-).	Check for proper connection of the power supply.
	The LED is defective.	Press the LED test button to check all LEDs.	Check that all LEDs illuminate. Return the unit to Woodward for repair if any LEDs fail to illuminate.
Horn does not sound with the occurrence of an alarm	Horn is not connected to the relay output terminals 1 and 2.	Connect the horn to the relay output terminals 1 and 2.	Check for proper connection of the horn.
	Power supply to the horn not connected.	Connect the horn power supply between horn and relay output terminals 1 and 2.	Check for proper connection of the horn power supply.
An LED does not illuminate when it should be.	The LED is defective.	Press the LED test button to check all LEDs.	Check that all LEDs illuminate. Return the unit to Woodward for repair if any LEDs fail to illuminate.
	The LED is misconfigured.	Configure the LED to the desired warning/alarm/status.	Check the configuration of the LED in LeoPC1.
The CAN status LED is not illuminated green or illuminated red (refer to Purpose of the Status LEDs on page 17 for details on the status indication.).	The LED is defective.	Press the LED test button to check all LEDs.	Check that all LEDs illuminate. Return the unit to Woodward for repair if any LEDs fail to illuminate.

Katolight Service - Master Repair Manual - Page 2291

Appendix D.
List of Parameters

Unit number P/N _____ Rev _____

Version easYlite- _____

Project _____

Serial number S/N _____ Date _____

Parameter	Setting range	Default value	Customer setting	
MAIN MENU				
Random number for password	Info	---		
Password CAN	0000 to 9999	0000		
Password DPC	0000 to 9999	0000		
APPLICATION				
Displayed alarm LED1	from message list *	EPS supplying load		
Displayed alarm LED2	from message list *	Not in automatic mode		
Displayed alarm LED3	from message list *	Start fail		
Displayed alarm LED4	from message list *	Underspeed 1		
Displayed alarm LED5	from message list *	Digital input 1		
Displayed alarm LED6	from message list *	Batt.overvolt 1		
Displayed alarm LED7	from message list *	Batt.undervolt 1		
Displayed alarm LED8	from message list *	Horn		
Displayed alarm LED9	from message list *	Digital input 3		
Displayed alarm LED10	from message list *	Digital input 3		
Displayed alarm LED11	from message list *	Digital input 3		
Displayed alarm LED12	from message list *	Digital input 3		
Displayed alarm LED13	from message list *	Digital input 3		
Displayed alarm LED14	from message list *	Digital input 3		
Displayed alarm LED17	from message list *	Digital input 3		
Displayed alarm LED18	from message list *	Digital input 3		
Displayed alarm LED19	from message list *	Digital input 3		
Displayed alarm LED20	from message list *	Digital input 3		
Relay 1	Horn CAN fail CAN fail or horn	Horn	☐ Horn ☐ CAN fail ☐ CAN / horn	☐ Horn ☐ CAN fail ☐ CAN / horn
COMM. INTERFACES				
CAN INTERFACES				
Device number	1 to 128	065		
Baudrate	20/50/100/125/250/ 500/800/1000 kBd	125 kBd		
Producer heartbeat time	0 to 65530	02000 ms		
CAN OPEN RPDO 1				
COB-ID	1 to 4294967295	0000000897		
ADDITIONAL C-SDO				
1st Client->Server COB-ID	1408 to 4294967295	0000001537		
1st Server->Client COB-ID	1408 to 4294967295	0000001409		
1st Node-ID of the Server	1 to 127	001		
Max answer time ext. devices	1 to 99	3.0 s		

© Woodward

Katolight Service - Master Repair Manual - Page 2292

Parameter	Setting range	Default value	Customer setting	
SYSTEM				
CODES				
Code level CAN port	Info	0		
Code level serial port / DPC	Info	5		
Commissioning level code	0000 to 9999	0003		
Temp. commissioning level code	0000 to 9999	0200		
Factory settings	YES / NO	No	☐ YES / ☐ NO	☐ YES / ☐ NO
Set default values	YES / NO	No	☐ YES / ☐ NO	☐ YES / ☐ NO
VERSION				
Serial number	Info	---		
Boot item number	Info	---		
Boot revision	Info	---		
Boot version	Info	---		
Program item number	Info	---		
Program revision	Info	---		
Program version	Info	---		

* refer to Table 9-1 for the messages which may be configured here

Katolight Service - Master Repair Manual - Page 2293

Appendix E.
Service Options

Product Service Options

The following factory options are available for servicing Woodward equipment, based on the standard Woodward Product and Service Warranty (5-01-1205) that is in effect at the time the product is purchased from Woodward or the service is performed. If you are experiencing problems with installation or unsatisfactory performance of an installed system, the following options are available:

- Consult the troubleshooting guide in the manual.
- Contact Woodward technical assistance (see "How to Contact Woodward" later in this chapter) and discuss your problem. In most cases, your problem can be resolved over the phone. If not, you can select which course of action you wish to pursue based on the available services listed in this section.

Returning Equipment For Repair

If a control (or any part of an electronic control) is to be returned to Woodward for repair, please contact Woodward in advance to obtain a Return Authorization Number. When shipping the unit(s), attach a tag with the following information:

- name and location where the control is installed;
- name and phone number of contact person;
- complete Woodward part numbers (P/N) and serial number (S/N);
- description of the problem;
- instructions describing the desired type of repair.



CAUTION

To prevent damage to electronic components caused by improper handling, read and observe the precautions in Woodward manual 82715, *Guide for Handling and Protection of Electronic Controls, Printed Circuit Boards, and Modules.*

© Woodward

Packing a Control

Use the following materials when returning a complete control:

- protective caps on any connectors
- antistatic protective bags on all electronic modules
- packing materials that will not damage the surface of the unit
- at least 100 mm (4 inches) of tightly packed, industry-approved packing material
- a packing carton with double walls
- a strong tape around the outside of the carton for increased strength

Return Authorization Number RAN

When returning equipment to Woodward, please telephone and ask for the Customer Service Department in Stuttgart [+49 (0) 711 789 54-0]. They will help expedite the processing of your order through our distributors or local service facility. To expedite the repair process, contact Woodward in advance to obtain a Return Authorization Number, and arrange for issue of a purchase order for the unit(s) to be repaired. No work can be started until a purchase order is received.

NOTE

We highly recommend that you make arrangement in advance for return shipments. Contact a Woodward customer service representative at +49 (0) 711 789 54-0 for instructions and for a Return Authorization Number.

Replacement Parts

When ordering replacement parts for controls, include the following information:

- the part numbers P/N (XXXX-XXX) that is on the enclosure nameplate
- the unit serial number S/N, which is also on the nameplate

How To Contact Woodward

Please contact following address if you have questions or if you want to send a product for repair:

Woodward Governor Company
Leonhard-Reglerbau GmbH
Handwerkstrasse 29
70565 Stuttgart - Germany

Phone: +49 (0) 711 789 54-0 (8:00 - 16:30 German time)
Fax: +49 (0) 711 789 54-100
eMail: sales-stuttgart@woodward.com

For assistance outside Germany, call one of the following international Woodward facilities to obtain the address and phone number of the facility nearest your location where you will be able to get information and service.

Facility	Phone number
USA	+1 (970) 482 5811
India	+91 (129) 230 7111
Brazil	+55 (19) 3708 4800
Japan	+81 (476) 93 4661
The Netherlands	+31 (23) 566 1111

You can also contact the Woodward Customer Service Department or consult our worldwide directory on Woodward's website (**www.woodward.com**) for the name of your nearest Woodward distributor or service facility. [For worldwide directory information, go to **www.woodward.com/ic/locations**.]

© Woodward

Engineering Services

Woodward Industrial Controls Engineering Services offers the following after-sales support for Woodward products. For these services, you can contact us by telephone, by e-mail, or through the Woodward website.

- Technical support
- Product training
- Field service during commissioning

Technical Support is available through our many worldwide locations, through our authorized distributors, or through GE Global Controls Services, depending on the product. This service can assist you with technical questions or problem solving during normal business hours. Emergency assistance is also available during non-business hours by phoning our toll-free number and stating the urgency of your problem. For technical engineering support, please contact us via our toll-free or local phone numbers, e-mail us, or use our website and reference technical support.

Product Training is available on-site from several of our worldwide facilities, at your location, or from GE Global Controls Services, depending on the product. This training, conducted by experienced personnel, will assure that you will be able to maintain system reliability and availability. For information concerning training, please contact us via our toll-free or local phone numbers, e-mail us, or use our website and reference ***customer training***.

Field Service engineering on-site support is available, depending on the product and location, from our facility in Colorado, or from one of many worldwide Woodward offices or authorized distributors. Field engineers are experienced on both Woodward products as well as on much of the non-Woodward equipment with which our products interface. For field service engineering assistance, please contact us via our toll-free or local phone numbers, e-mail us, or use our website and reference ***field service***.

Katolight Service - Master Repair Manual - Page 2297

Technical Assistance

If you need to telephone for technical assistance, you will need to provide the following information. Please write it down here before phoning:

Contact

Your company_____

Your name_____

Phone number _____

Fax number _____

Control (see name plate)

Unit no. and revision: P/N:_____ REV: _____

Unit type easYlite- _____

Serial number S/N _____

Description of your problem

_____

_____

_____

_____

_____

_____

Please be sure you have a list of all parameters available. You can print this using LeoPC1. Additionally you can save the complete set of parameters (standard values) and send them to our Service department via e-mail.

© Woodward

We appreciate your comments about the content of our publications.

Please send comments to: stgt-documentation@woodward.com

Please include the manual number from the front cover of this publication.

Woodward Governor Company
Leonhard-Reglerbau GmbH
Handwerkstrasse 29 - 70565 Stuttgart - Germany
Phone +49 (0) 711 789 54-0 • Fax +49 (0) 711 789 54-100
sales-stuttgart@woodward.com

Homepage

http://www.woodward.com/smart-power

Woodward has company-owned plants, subsidiaries, and branches, as well as authorized distributors and other authorized service and sales facilities throughout the world.

Complete address/phone/fax/e-mail information for all locations is available on our website (www.woodward.com).

05/5/S

Remote Annunciator

KRA-100

DESCRIPTION

RA 50 - Mimic display of the EngineMaster or GenMaster LCD display transmitted through a RS485 port utilizing twisted pair wire. The remote display is powered from the engine batteries and can be located up to 4000' away from the control system. Multiple remote annunciators can be connected to one control system.

RA 100 - Mimic display of the GenMaster LCD display transmitted through a RS485 port utilizing twisted pair wire. The remote display is powered from the engine batteries and can be located up to 4000' away from the control system. The display has green, amber and red LEDs to indicate pre-alarms, faults, and transfer switch position. The remote annunciator has a ring back circuit to silence the alarm horn. Should another pre-alarm or fault occur, after the alarm horn has been silenced, the alarm horn will resound until silenced. When a pre-alarm or fault is acknowledged, the amber or red LED will flash on and off to indicate alarm acknowledged. Multiple remote annunciators can be connected to one control system.

SPECIFICATIONS

Supply voltage	12 or 24 VDC
Operating voltage	-15% - +30%
Power consumption	100 mA
Operating temperature	-30 deg C to +75 deg C
LCD display	2 lines - 16 characters with super twist with LED backlight
LED	4 indicating
Alarm horn	Pizzo buzzer
Toggle switch	Alarm silence and test
Communication	RS485 port
Transient voltage suppression	To UL497B 1.5Kw @ 1ms

DIMENSIONS

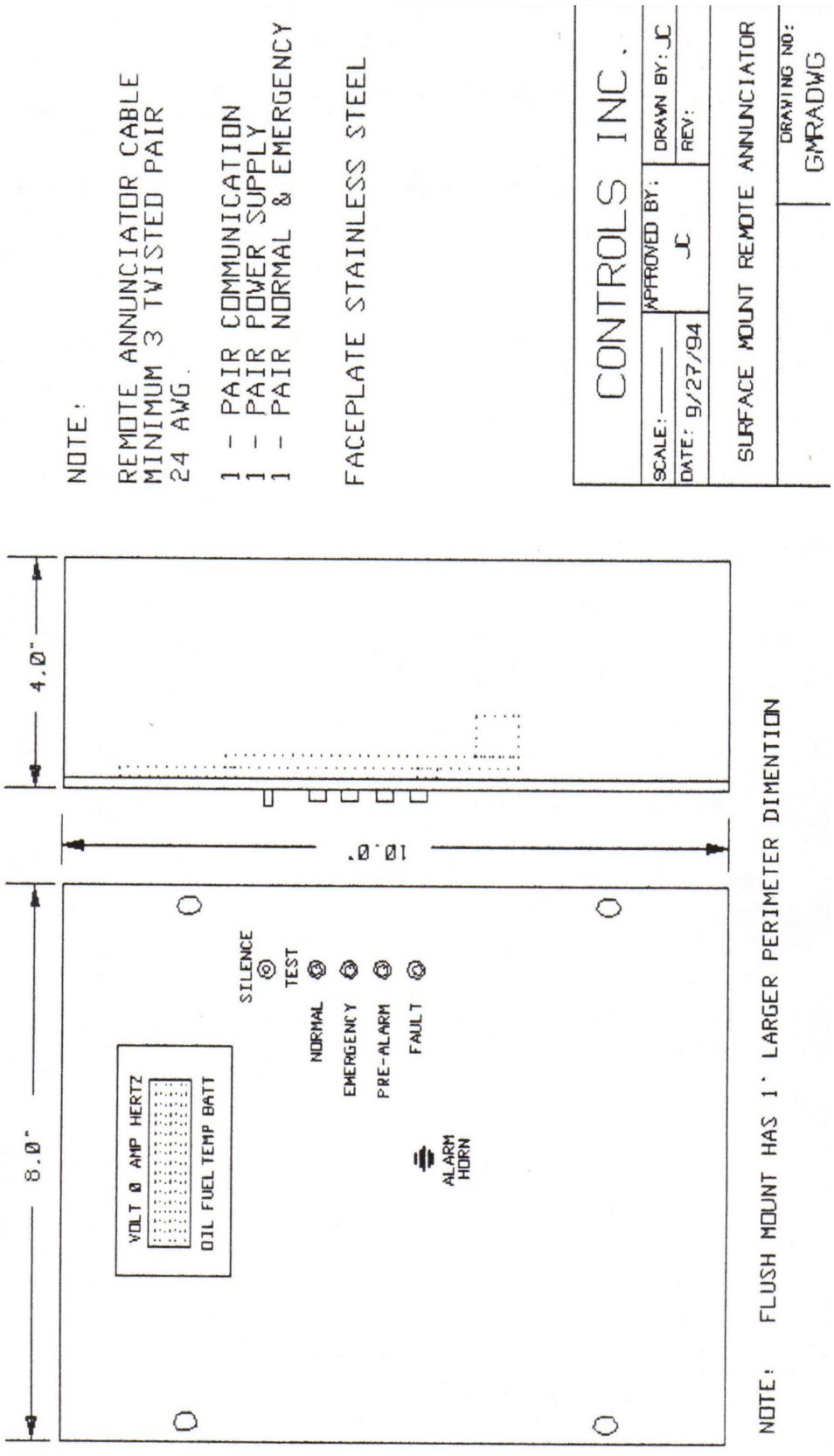
NOTE:
REMOTE ANNUNCIATOR CABLE
MINIMUM 3 TWISTED PAIR
24 AWG.
1 - PAIR COMMUNICATION
1 - PAIR POWER SUPPLY
1 - PAIR NORMAL & EMERGENCY
FACEPLATE STAINLESS STEEL
CONTROLS INC.
SCALE: ——
APPROVED BY:
DRAWN BY: JC
DATE: 9/27/94
JC
REV:
SURFACE MOUNT REMOTE ANNUNCIATOR
DRAWING NO:
GMRADWG
4.0"
10.0"
8.0"
VOLT Ø AMP HERTZ
OIL FUEL TEMP BATT
SILENCE
TEST
NORMAL
EMERGENCY
PRE-ALARM
FAULT
ALARM HORN
NOTE: FLUSH MOUNT HAS 1" LARGER PERIMETER DIMENTION

Remote Annunciator

KRA-100

DIAGRAM

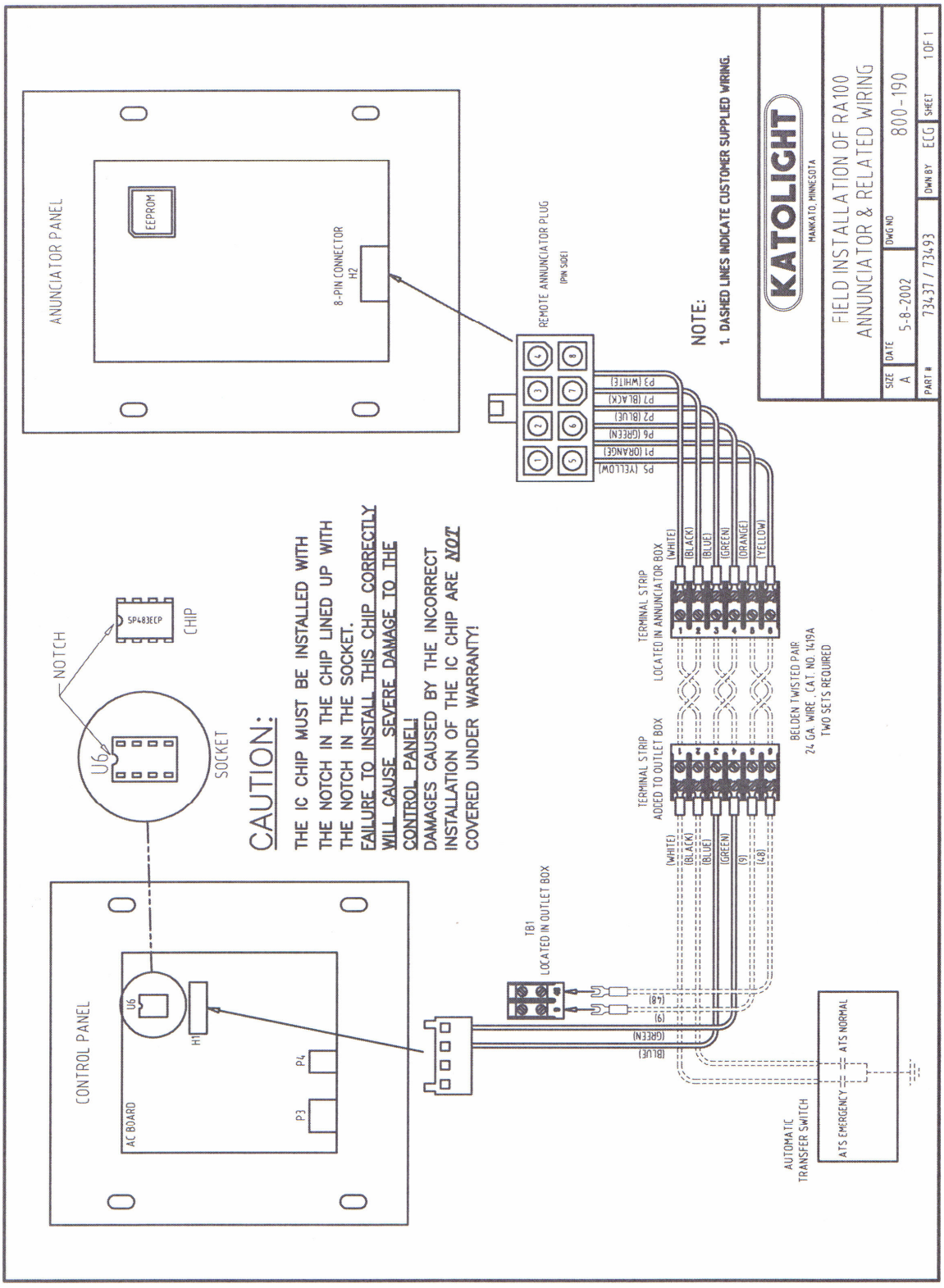

For support or information, call us at 800-325-5450 or visit us at www.katolight.com

Materials and specifications subject to change without notice.
© Katolight Corporation. 100 Power Drive, Mankato, MN 56001

INSTRUCTION MANUAL

FOR

KRDP-110
(KATOLIGHT REMOTE DISPLAY PANEL)

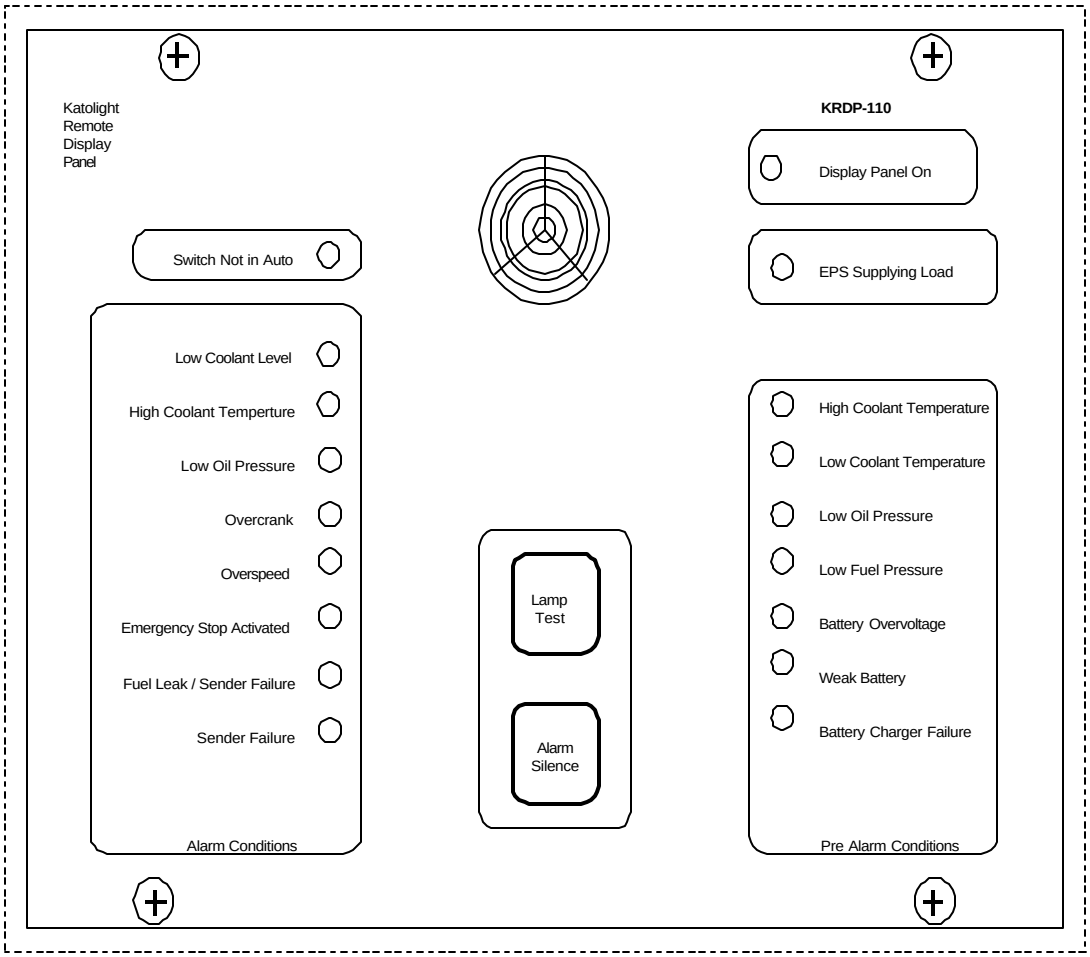

Revision: 05/04

INTRODUCTION

This manual provides information concerning the installation and operation of the KRDP-110 Remote Display Panel. To accomplish this, the following is provided.

- General Information
- Specifications
- Functional Description
- Installation Information
- Testing Procedures

WARNING

TO AVOID PERSONAL INJURY OR EQUIPMENT DAMAGE QUALIFIED PERSONNEL SHOULD PERFORM THE PROCEDURES PRESENTED IN THIS MANUAL.

Information incorporated into this publication
is derived from material copyrighted by
Basler Electric and used with their permission.

Printed in the USA

It is not the intention of this manual to cover all details and variations in equipment, nor does this manual provide data for every possible contingency regarding installation or operation. The availability and design of all features and options are subject to modification without notice. Should further information be required, contact Katolight Corporation, 100 Power Drive, PO Box 3229, Mankato, MN 56002-3229

CONTENTS

SECTION 1	GENERAL INFORMATION	1-1
	Description	1-1
	Features	1-1
	Functions	1-1
	Specifications	1-2
SECTION 2	HUMAN-MACHINE INTERFACE (Controls And Indicators)	2-1
	General	2-1
	Front Panel Display	2-1
	KRDP – 110 Connections	2-3
SECTION 3	FUNCTIONAL DESCRIPTION	3-1
	General	3-1
	Imputs	3-1
	Battery Operating Voltage	3-2
	AC Operating Voltage	3-2
	RS – 485 Interface	3-2
	Microprocessor	3-2
	Software	3-2
	Normal Mode	3-5
SECTION 4	INSTALLATION	4-1
	General	4-1
	Hardware	4-1
	Mounting	4-1
	Connections	4-2
	50K Connection	4-3
SECTION 5	TESTING	5-1
	Introduction	5-1
	Equipment Required	5-1
	Functional Test Procedure	5-1

SECTION 1 • GENERAL INFORMATION

DESCRIPTION

KRDP-110 Remote Display Panels use microprocessor-based technology to provide remote annunciation of engine-generator status. The KRDP-110 is design to be used in conjunction with the Katolight KDGC-500, KDGC-2000, KDGC-2001 or a 50K with an adapter to provide installations with NFPA 110 Level 1 and Level 2 compliance. Microprocessor-based technology allows the use of serial communications for quick and simple connection to the KDGC-500, KDGC-2000, KDGC-2001 or a 50K with and adapter. RS-485 compatible signals insure noise immunity over long distances. This combination of features in the KRDP-110 yields significant savings in installation and setup costs.

FEATURES

KRDP-110 Remote Display Panels have the following features.

- Packaged in metal cases for improved electromagnetic compatibility.
- Designed for use in harsh environments.
- Resistant to high moisture, salt fog, humidity, dust, dirt, and chemical contaminants.
- Resistant to the entrance of insects and rodents.
- Suitable for flush mounting or surface mounting.
- Suitable for controlling isolated generating systems or paralleled generating systems.
- Serial communications for easy installation.

FUNCTIONS

KRDP-110 remote display panel displays the following functions:

- Switch Not in Auto Alarm
- Low Coolant Level Alarm
- High Coolant Temperature Alarm
- Low Oil Pressure Alarm
- Overcrank Alarm
- Overspeed Alarm
- Emergency Stop Alarm
- Fuel Leak / Failure Sender
- Sender Failure Alarm
- Display Panel On LED
- Emergency System Supplying Load LED
- High Coolant Temperature Pre-alarm
- Low Coolant Temperature Pre-alarm
- Low Oil Pressure Pre-alarm
- Low Fuel Level Pre-alarm
- Battery Overvoltage Pre-alarm
- Weak Battery Pre-alarm
- Battery Charger Failure Pre-alarm

SPECIFICATIONS

KRDP-110 Remote Display Panels have the following specifications.

Electrical

Power Input

DC Range	8 to 32 Vdc, 2 watts maximum
AC Range	84 to 144 Vac, 5 VA maximum

Hardware

Communication Port

Interface

RS-485 — Used to communicate with KDGC-500, KDGC-2000, KDGC-2001 or a 50K with an adapter.

Isolation — 1800 Vdc for one minute between chassis ground and ac voltage input. 700 Vdc for one minute between any of the following groups

- Chassis ground
- Battery and 485 terminals
- AC voltage inputs

Radio Frequency Interference (RFI) — Type tested using a 5 watt, hand-held transceiver operating at random frequencies centered around 144 and 440 megahertz with the antenna located within 6 inches (15 centimeters) of the device in both vertical and horizontal planes

Environment

Operating Temperature Range	-40°C to 70°C (-40°F to 158°F)
Storage Temperature Range	-40°C to 85°C (-40°F to 185°F)

Salt Fog — Qualified to ASTM-117B-1989 with the device unpowered for the 100 hour test duration

Vibration — The device withstands 2 g in each of three mutually perpendicular planes, swept over the range of 10 to 500 hertz for a total of six sweeps, 15 minutes each sweep, without structural damage or degradation of performance

Shock — 15 g

Weight — 3 kilograms (6.5 pounds)

SECTION 2 • HUMAN-MACHINE INTERFACE (Controls And Indicators)

GENERAL

This section provides a description of the KRDP-110 Remote Display Panel human machine interface (HMI).

FRONT PANEL DISPLAY

Figure 2-1 shows the front panel HMI for an KRDP-110. Descriptions in Table 2-1 refer to call outs in Figure 2-1.

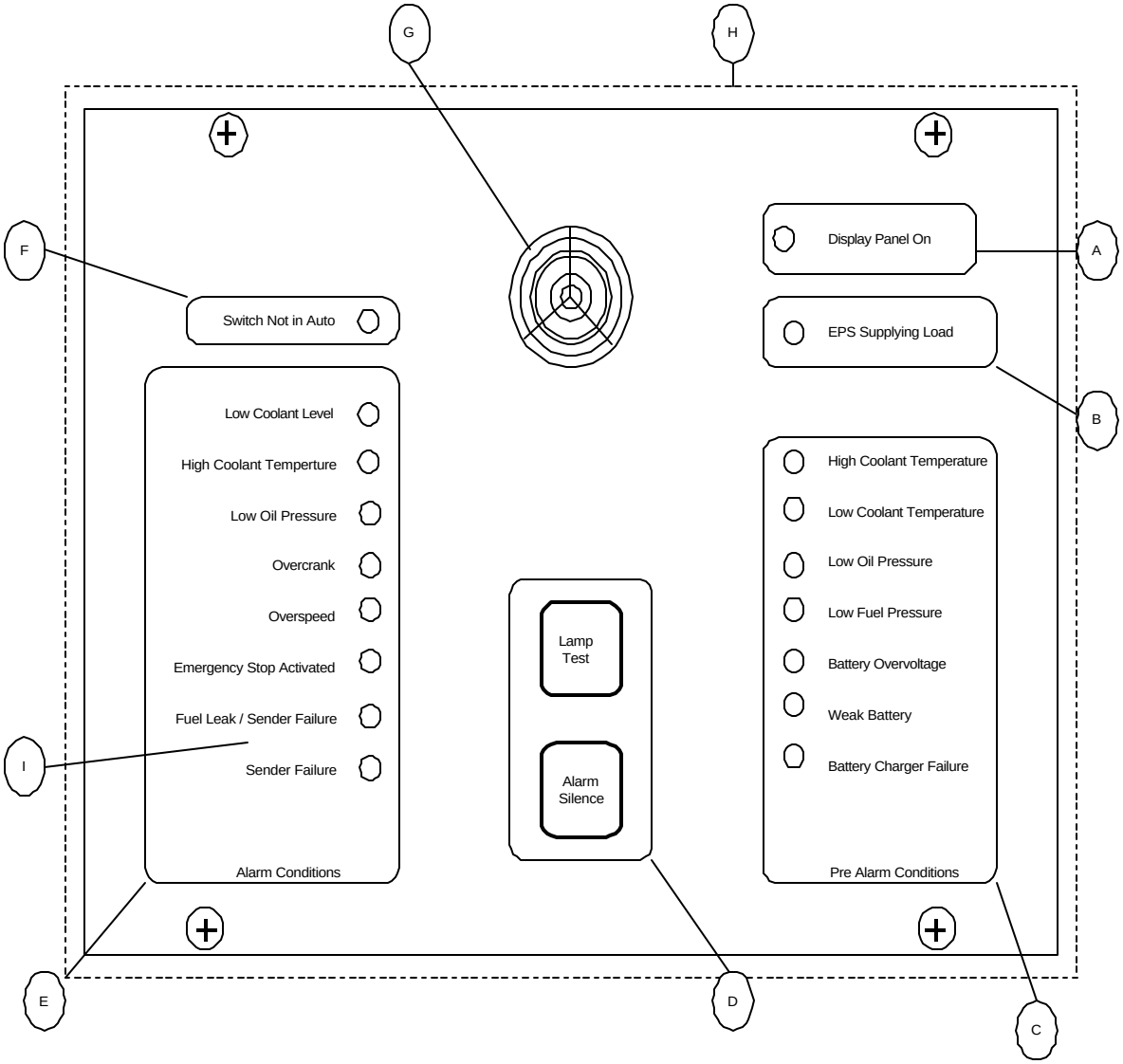

Figure 2-1. KRDP-110 Front Panel

Table 2-1. KRDP-100 HMI (Controls And Indicators)

A Green LED illuminates when power is applied to the KRDP-110.

B Green LED turns ON when the generator is supplying more than two percent of rated current.

C **Pre-Alarm Conditions**

- Yellow LED illuminates when the high coolant temperature pre-alarm setting is exceeded.
- Yellow LED illuminates when the low coolant temperature pre-alarm setting is exceeded.
- Yellow LED illuminates when the low oil pressure pre-alarm setting is exceeded.
- Yellow LED illuminates when the low fuel level pre-alarm setting is exceeded.
- Yellow LED illuminates when the battery overvoltage pre-alarm setting is exceeded.
- Yellow LED illuminates when the weak battery pre-alarm setting is exceeded.
- Yellow LED illuminates when the battery charger failure contact has closed.

D **Pushbuttons**

Lamp Test Pushbutton exercises the audible alarm and tests all LED's.

Alarm Silence Pushbutton silences the audible alarm.

E **Alarm Conditions**

- Red LED illuminates when a low coolant level has occurred.
- Red LED illuminates when the high coolant temperature alarm setting is exceeded
- Red LED illuminates when the low oil pressure alarm setting is exceeded.
- Red LED illuminates when the overcrank setting is exceeded.
- Red LED illuminates overspeed setting is exceeded.
- Red LED illuminates when the emergency stop is activated
- Red LED illuminates when the fuel leak / failure sender contact is closed.
- Red LED illuminates when a sender failure is detected.

F

- Red LED illuminates when the KDGC-500, KDGC-2000, KDGC-2001 or 50K panel is not in AUTO.

G Audible alarm annunciates when KDGC-500, KDGC-2000, KDGC-2001 or 50K panel is not in AUTO and when alarms and Pre-alarms occur.

H Dashed line indicates the front panel outside edges when flush mounted.

KRDP-110 CONNECTIONS

Compression type terminal strips make wiring the KRDP-110 a simple task. It is necessary to remove the front panel to access the printed circuit board and terminal strips. These terminal strips connections accept one #10 or two #14 AWG wires or smaller. These operations are made even easier by user friendly labeling of the terminal strips on the printed circuit board. Once wired, these connectors can be quickly disconnected to facilitate KRDP-110 replacement for out of circuit testing or maintenance. Each connector is keyed to prevent improper connections. Figure 2-2 shows the KRDP-110 rear panel terminal connections.

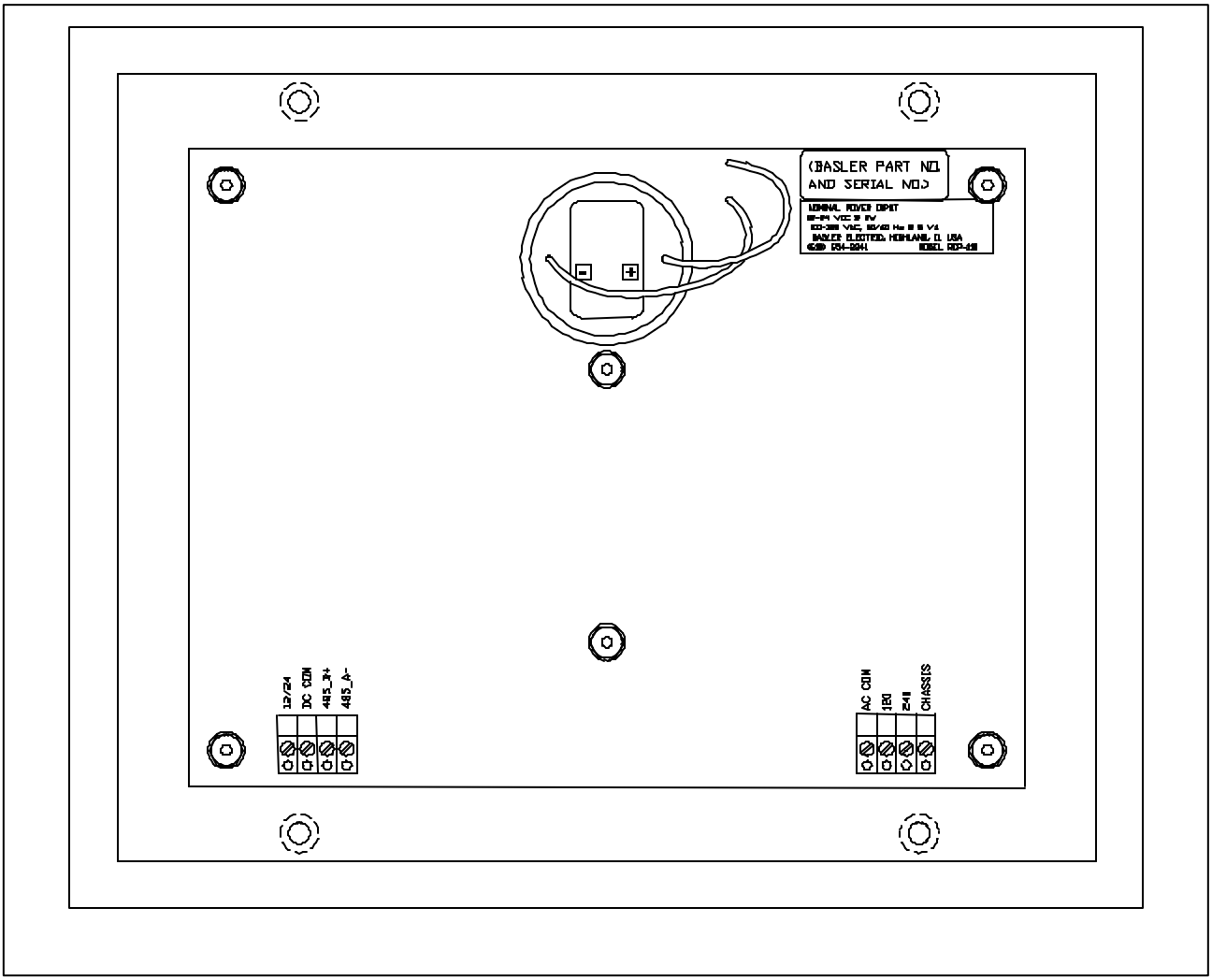

Figure 2-2. KRDP-110 Remote Display Panel With Front Panel Removed

SECTION 3 • FUNCTIONAL DESCRIPTION

GENERAL

KRDP-110 Remote Display Panels use microprocessor-based technology to provide remote annunciation of various engine and generator parameters. Refer to the following paragraphs for the KRDP-110 functional description.

Circuit functional description is divided into *Inputs, Microprocessor, Outputs,* and *Software*. Circuit functions illustrated in Figure 3-1 are described in the following paragraphs.

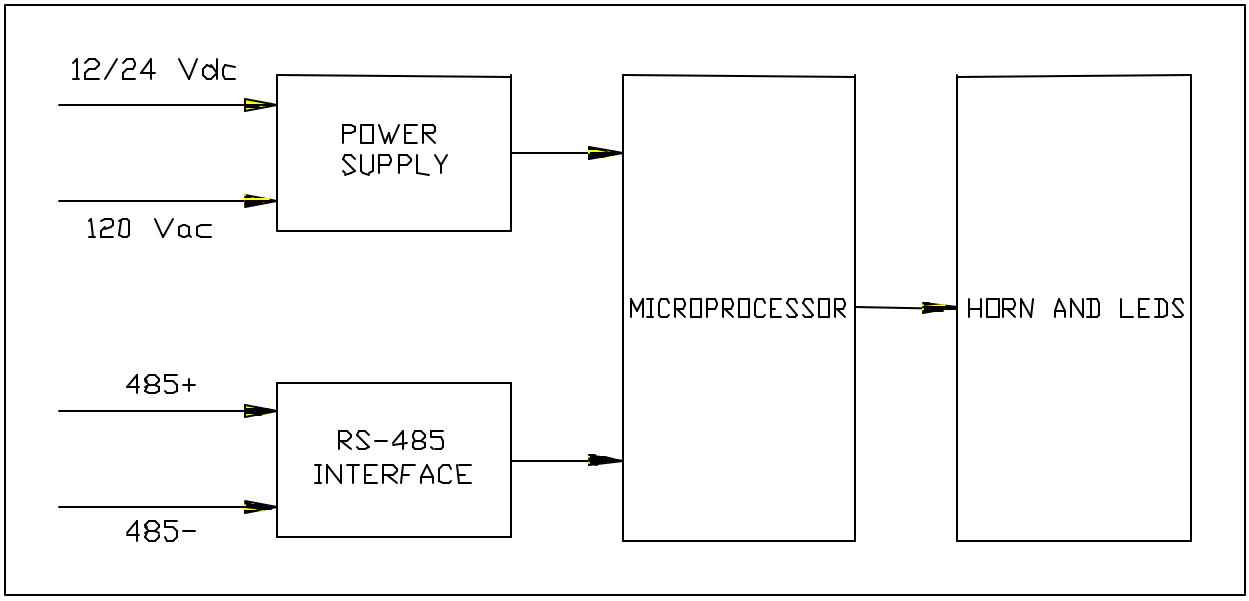

Figure 3-1. KRDP-110 Functional Block Diagram

INPUTS

There are three types of inputs to the KRDP-110 Display panel. They are:

- Operating (battery) dc power
- Operating (ac) power
- Serial interface

The following paragraphs describe these inputs.

Battery Operating Voltage

Required operating voltage is a nominal 12 or 24 Vdc. Operating voltage may be in the range of 8 to 32 Vdc. An internal switching power supply uses this battery voltage or a rectified and filtered signal from the ac input to generate +5 Vdc. The two power inputs (ac and dc) are isolated from each other and may be applied simultaneously.

AC Operating Voltage

Required operating voltage is a nominal 100/120 Vac 50/60 hertz. Operating voltage may be in the range of 80 to 144 Vac. An internal switching power supply uses this ac input voltage or the battery input voltage to generate +5 Vdc. The two power inputs (ac and dc) are isolated from each other and may be applied simultaneously.

RS-485 Interface

The differential RS-485 input signal is converted to a single-ended signal suitable for use by the microprocessor.

MICROPROCESSOR

Software programmed in the programmable read-only memory (PROM) controls the overall functionality of the device and makes all decisions based on programming and system inputs. Random access memory and electrically erasable memory are also provided on the microprocessor.

SOFTWARE

Software embedded in the KRDP-110 controls all aspects of device functionality. This includes power-up initialization, front panel set-up, configuration, and serial communications input monitoring. When power is first applied, the KRDP-110 initiates a power-up sequence. The embedded software and the on-board memory is checked, all functions are activated, and input monitoring begins.

Normal Mode

Normal mode displays the alarms and pre-alarms on the KRDP-110 front panel. Pressing the front panel **Lamp Test** pushbutton activates the audible alarm and turns on all LED's. Pressing the **Alarm Silence** pushbutton silences the audible alarm. After the alarm has been silenced only another alarm or pre-alarm will cause the audible alarm to re-activate. LED indicators can only be reset by resetting the BE1-KDGC 2000 locally.

SECTION 4 • INSTALLATION

GENERAL

KRDP-110 Remote Display Panels are delivered in sturdy cartons to prevent shipping damages. Upon receipt of the unit, check for damage, and if there is evidence of such, immediately file a claim with the carrier and notify the Katolight Regional Sales Office, your Sales Representative or Sales Representative at Katolight, Mankato, MN.

If the remote display is not installed immediately, store it in the original shipping package in a moisture and dust free environment.

HARDWARE

KRDP-110 panels are packaged in NEMA 1 metal cases for improved electromagnetic compatibility and are suitable for either flush mounting or projection mounting. The metal case is resistant to moisture, salt fog, humidity, dust, dirt, and chemical contaminants. It also inhibits insect and rodent entrance.

MOUNTING

Figure 4-1 provides the overall dimensions, cutout dimensions, and drilling pattern diagram for mounting KRDP-110 units. Part numbers for flush mount and projection mount units are as follows:

- KL Part # 73352 or KL Part # 73353 for use with the KDGC-500, KDGC-2001 or 50K.
- KL Part # 71114 or KL Part # 73351 for use with the KDGC-2000.

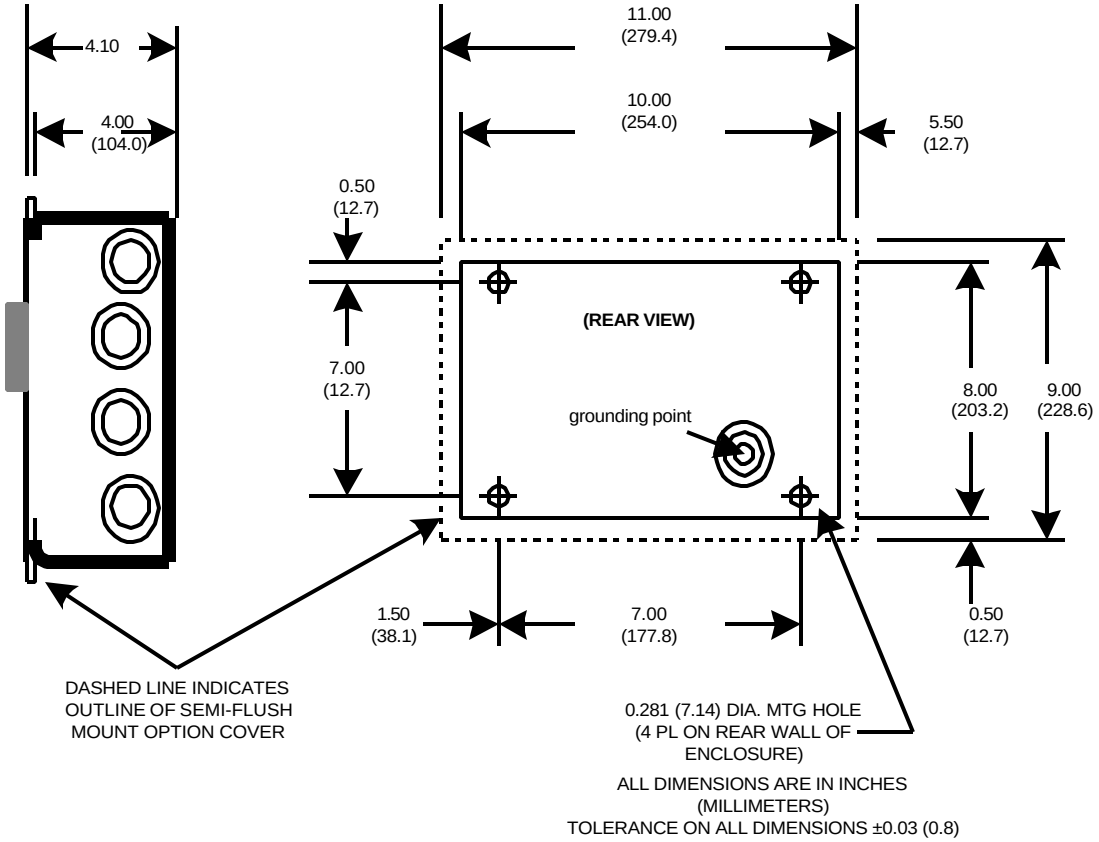

Figure 4-1. KRDP-110 Rear And Side View, Overall Dimensions And Drilling Pattern Diagram

ONNECTIONS

CAUTION

Be sure the controller battery input polarity is wired correctly. Reverse polarity battery power will not allow the unit to be DC powered. Incorrect wiring may result in damage to the remote display.

NOTE

Be sure the remote display panel is hard-wired to earth ground with no smaller than 16 AWG copper wire attached to the chassis terminal on the rear of the remote display. An additional ground connection is on the conduit box.

Except as noted above, connections should be made with minimum wire size of 20 AWG. Be sure to use the correct input power for the power supply. Figure 4-2 is a typical connection diagram. Katolight recommends “Belden 9463” Cable.

Each KRDP-110 internally terminates the RS-485 connection with a 100-ohm resistance. Connecting multiple remote display panels may require modification of this terminating impedance. The internal terminating resistance can be eliminated by removing R65 from the printed circuit board. R65 is located in the lower left corner near the RS-485 terminal strip. Consult the EIA-RS-485 standard for a complete discussion.

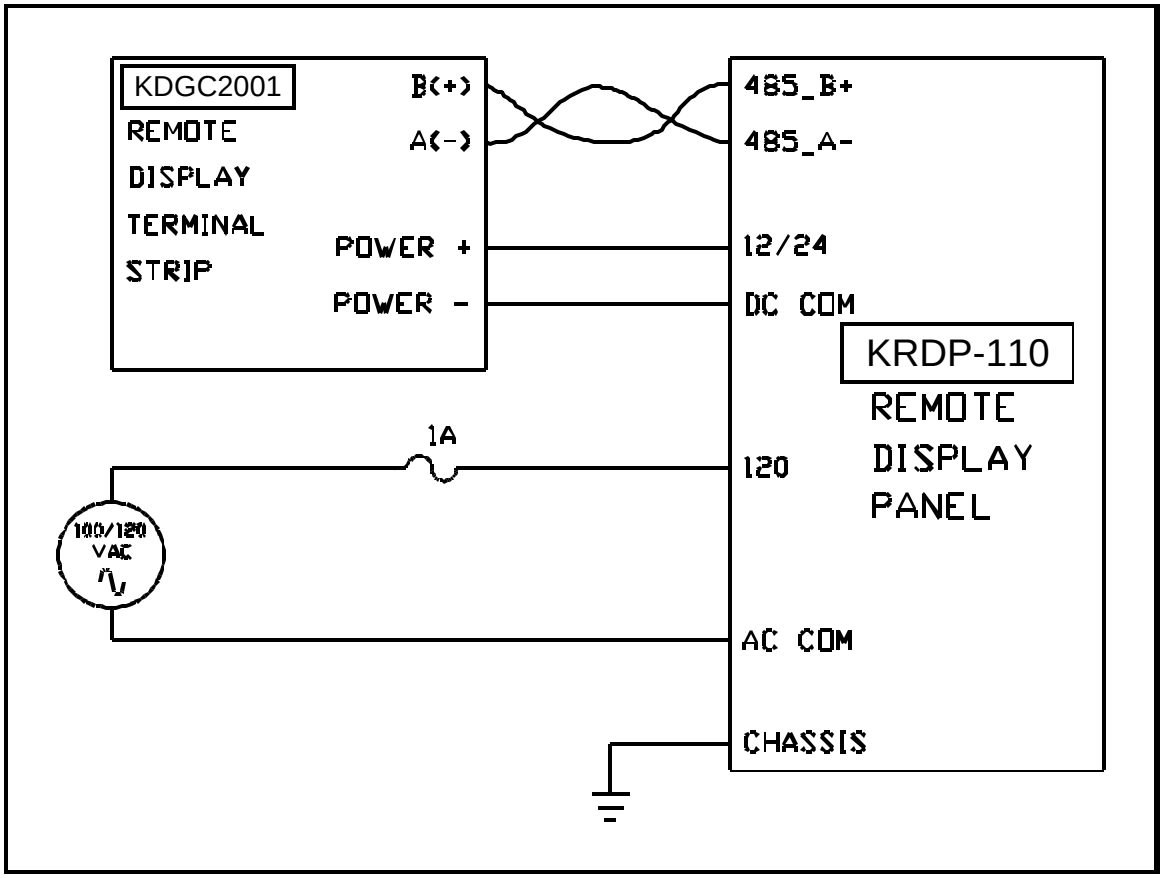

Figure 4-2. KRDP-110 Typical Connection Diagram

KATOLIGHT CORPORATION

KL2B17
Part # 72395

The Katolight KL2B17 allows the Katolight 50K series control panel to be connected to the KDRP-110.

The KL2B17 maybe operated on 12 or 24 volts DC.

The KL2B17 transmits the encoded DC signals from the 16-light board and the 17th DC signal from the connector on the KL2B17 its self.

The sequence of the connections on the connector of the 16-light board from left to right are as follows:

Terminal Number	Function
1	Sender Failure Alarm
2	Not in Auto Alarm
3	Low Fuel Level Pre-alarm
4	Low Oil Pressure Pre-alarm
5	High Coolant Temp. Pre-alarm
6	Low Coolant Temp. Pre-alarm
7	Generator Supplying Load
8	Low Coolant Level
9	Fuel Leak Alarm
10	Weak Battery Pre-alarm
11	Battery Overvoltage Pre-alarm
12	High Coolant Temp. Alarm
13	Low Oil Pressure Alarm
14	Overspeed Alarm
15	Overcrank Alarm
16	Battery Charger Failure Pre-alarm
17	Emergency Stop Activated (Located on the bottom right-hand corner of the KL2B17.)

The transmitted signal is a RS-485 protocol and the output connection is on the upper right-hand side of the KL2B17.

Katolight recommends that the hookup wire from the KL2B17 to the KRDP-110 be Belden 9463 twisted pair shelled, with the shelled grounded to earth ground only at the transmitter end.

Katolight Service - Master Repair Manual - Page 2318

SECTION 5 · TESTING

INTRODUCTION

This section provides a procedure for testing the KRDP-110 using the built-in field test mode.

EQUIPMENT REQUIRED

The following equipment or suitable substitute is required.

- DC power supply, 24 volts
- 2 each, one ampere fuses
- Voltage source, 50/60 hertz, 100/120 volts
- Signal generator, 10.0 hertz, 5 volts peak to peak, square wave

FUNCTIONAL TEST PROCEDURE

To functional test the KRDP-110, perform the following the steps.

Step 1. Connect the test setup as shown in Figure 5-1.

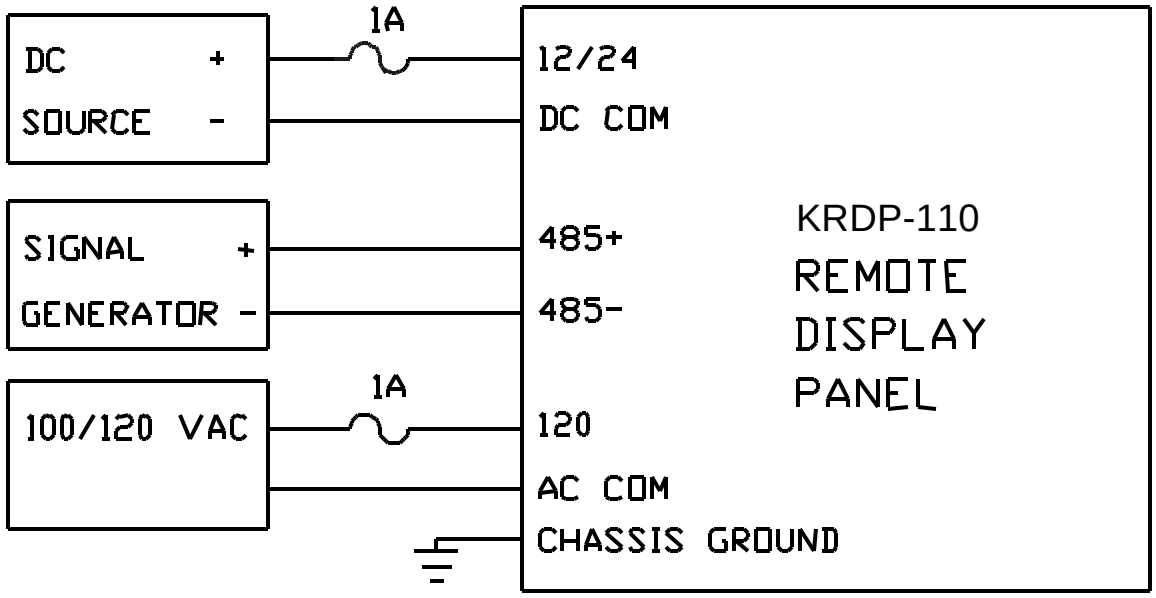

Figure 5-1. Test Set Diagram

Step 2. Apply dc power.

Step 3. The Display Panel On LED should turn on.

Step 4. Press and hold the Lamp Test pushbutton.

Step 5. The alarm should sound and all LED's should turn on.

Step 6. Release the pushbutton and the alarm and LED'S should turn off.

Step 7. Apply the 10 hertz signal.

Step 8. Press and release the Lamp Test pushbutton.

Step 9. Each LED and the horn should annunciate in the following order before repeating:

- Switch Not in Auto
- Low Coolant Level Alarm
- High Coolant Temperature Alarm
- Low Oil Pressure Alarm
- Overcrank Alarm
- Overspeed Alarm
- Emergency Stop Activated Alarm
- Fuel Leak / Sender Failure
- Sender Failure Alarm
- EPS Supplying Load
- High Coolant Temperature Pre-alarm
- Low Coolant Temperature Pre-alarm
- Low oil Pressure Pre-alarm
- Low Fuel Level Pre-alarm
- Battery Overvoltage Pre-alarm
- Weak Battery Pre-alarm
- Battery Charger Failure Pre-alarm
- Audible Alarm

Step 10. Press and release the Alarm Silence pushbutton.

Step 11. The cycling indicators should stop when the Alarm Silence pushbutton is pressed.

Step 12. Remove the 10 Hz source and the DC power input.

Step 13. Repeat the above test procedure with AC power applied instead of the DC power.

This completes the field test procedures.

KRDP Annunciator Control Connection KL2B17 Part # 72395

The Katolight KL2B17 allows the Katolight 50K series control panel to be connected to the KDRP-110.
The KL2B17 maybe operated on 12 or 24 volts DC.
The KL2B17 transmits the encoded DC signals from the 16-light – 12-wire board and the 17th DC signal from the connector on the KL2B17 its self.

The sequence of the connections on the connector of the 16-light board from left to right are as follows:

Terminal Number	Function
1	Sender Failure Alarm
2	Not in Auto Alarm
3	Low Fuel Level Pre-alarm
4	Low Oil Pressure Pre-alarm
5	High Coolant Temp. Pre-alarm
6	Low Coolant Temp. Pre-alarm
7	Generator Supplying Load
8	Low Coolant Level
9	Fuel Leak Alarm
10	Weak Battery Pre-alarm
11	Battery Overvoltage Pre-alarm
12	High Coolant Temp. Alarm
13	Low Oil Pressure Alarm
14	Overspeed Alarm
15	Overcrank Alarm
16	Battery Charger Failure Pre-alarm
17	Emergency Stop Activated (Located on the bottom right-hand corner of the KL2B17.)

The transmitted signal is a RS-485 protocol and the output connection is on the upper right-hand side of the KL2B17.

Katolight recommends that the hookup wire from the KL2B17 to the KRDP-110 be Belden 9463 twisted pair shelled, with the shelled grounded to earth ground only at the transmitter end.

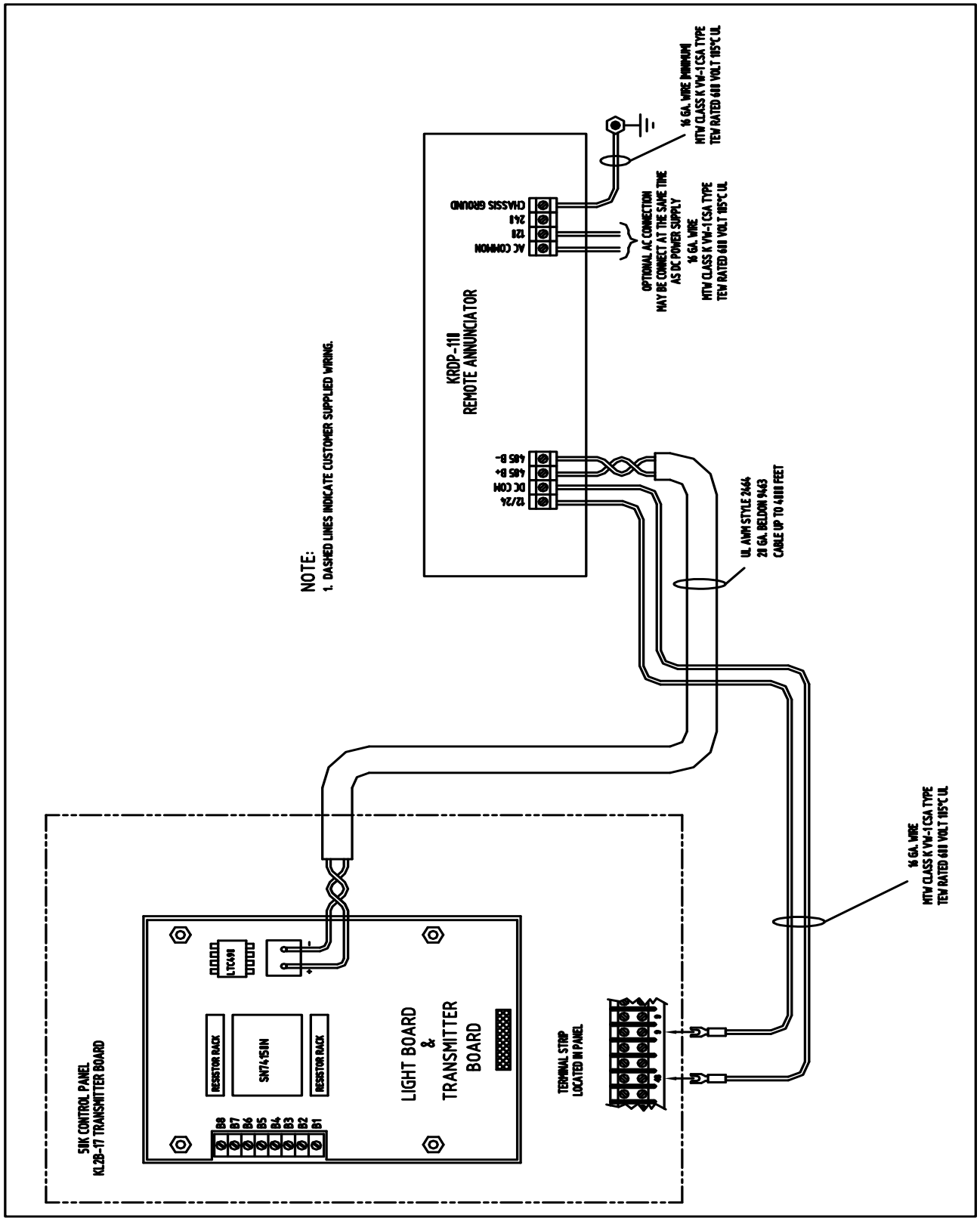

For support or information, call us at 800-325-5450 or visit us at www.katolight.com

Materials and specifications subject to change without notice.
© Katolight Corporation. 100 Power Drive, Mankato, MN 56001

CHARLES CHARGER
INSTALLATION - INSTRUCTION MANUAL

MODEL # AA

IMPORTANT SAFETY INSTRUCTIONS:
SAVE THESE INSTRUCTIONS

1. This manual contains important safety and operating instructions for battery chargers.

2. Before using battery charger read all instructions and cautionary markings on the battery charger and batteries.

3. **CAUTION** - To reduce risk of injury, charge only lead acid or nickel cadmium type rechargeable batteries. Other types of batteries may burst, causing personal injury and damage.

4. Do not expose charger to rain or snow.

5. Use of attachments not recommended or sold by Charles Industries may result in a risk of fire, electrical shock or injuries to personnel.

6. Do not operate charger if it has received a sharp blow, been dropped or otherwise damaged in anyway. Take it to a qualified serviceman.

7. Do not disassemble charger. Take it to a qualified serviceman when service or repair is required. Incorrect assembly may result in risk of electrical shock or fire.

8. **WARNING: RISK OF EXPLOSIVE GASES:**

A. WORKING IN VICINITY OF A LEAD ACID BATTERY IS DANGEROUS. BATTERIES GENERATE EXPLOSIVE GASES DURING NORMAL BATTERY OPERATION. FOR THIS REASON, IT IS OF UTMOST IMPORTANCE THAT EACH TIME BEFORE USING YOUR CHARGER YOU READ THIS MANUAL AND FOLLOW THE INSTRUCTIONS EXACTLY.

B. To reduce risk of battery explosion, follow these instructions and those published by battery manufacturer and manufacturer of any equipment you intend to use in the vicinity of the battery. Review cautionary markings on these products and on engine.

P/N 039096 Printed in U.S.A.

9. PERSONAL PRECAUTIONS:

A. Someone should be within range of voice or close enough to come to your aid when you work near a lead acid battery.

B. Have plenty of fresh water and soap nearby in case battery acid contacts skin, clothing or eyes.

C. Wear complete eye protection and clothing protection. Avoid touching eyes while working near battery.

D. If battery acid contacts skin or clothing, wash them immediately with soap and water. If acid enters eye, immediately flood eye with running cold water for at least ten minutes and get medical attention immediately.

E. **NEVER** smoke or allow a spark or flame into vicinity of battery or engine.

F. Be extra cautious to reduce risk of dropping a metal tool onto battery. It might spark or short circuit battery or other electrical parts that may cause explosion.

G. Remove personal metal items such as rings, bracelets, necklaces, and watches when working near a lead acid battery. A lead acid battery can produce a short circuit high enough to weld a ring or the like to metal, causing a severe burn.

H. Use charger for charging a LEAD ACID or NICKEL CADMIUM battery only. Other batteries may burst and cause injury to persons and damage to property.

I. **NEVER** charge a frozen battery.

10. PREPARING TO CHARGE:

A. If necessary to remove battery, always remove grounded terminal from battery first. Make sure all accessories are off, so as not to cause an arc.

B. Be sure area around battery is well ventilated while battery is being charged.

C. Clean battery terminals - be careful to keep corrosion from coming in contact with eyes.

D. Add distilled water in each cell until battery acid reaches levels specified by battery manufacturer. This helps purge excessive gas from cells. Do not overfill. For a battery without cell caps, carefully follow manufacturer's recharging instructions.

E. Study all battery manufacturer's specific precautions, such as removing or not removing cell caps while charging and recommended rates of charge.

11. CHARGER LOCATION

A. Never place charger directly above battery being charged; gases from battery will corrode and damage charger.

B. Never allow battery acid to drip on charger when reading gravity or filling battery.

C. Do not operate charger in a closed-in area or restrict ventilation in any way.

D. Do not set a battery on top of charger.

12. SPARK NEAR THE BATTERY MAY CAUSE BATTERY EXPLOSION. TO REDUCE RISK OF A SPARK NEAR BATTERY:

A. Check polarity of battery posts. Positive (POS,P, +) battery post usually has a larger diameter than negative (NEG,N, -) post.

B. Attach at least a 24-inch-long 6-gauge (AWG) insulated battery cable to NEGATIVE (NEG, N, -) battery post.

C. Connect positive (red) charger wire to positive (POS,P, +) post of battery.

D. Position yourself and free end of cable as far away from battery as possible. Then connect negative (black) charger wire to free end of cable.

E. Do no face battery when making final connections.

F. When disconnecting charger, always do so in reverse sequence of connecting procedure and break first connection while as far away from battery as practical.

13. GROUNDING INSTRUCTIONS:

This battery charger should be connected to a grounded metal permanent wiring system or an equipment grounding conductor should be run with circuit conductors and connected to equipment grounding terminal or lead on battery charger. Connections to battery charger should comply with all appropriate codes and ordinances.

14. INSTALLATION:

A. This battery charger should be installed so that it is not likely to be contacted by people.

B. Select a dry area as close to the batteries to be charged as possible. Avoid high temperature areas and observe that unit is not exposed to rain or spray.

C. When selecting mounting position, observe wiring access is provided at either right or left locations. The unit should be mounted vertically.

D. The charger should be mounted to the surface using fasteners. They should be sufficient length to assure a vibration-free mounting. All fasteners should be corrosion-resistant and the preferred fastener is a machine bolt backed up with a flat washer and lock washer as well as a nut.

E. If the charger has the temperature compensation option, turn to that section and follow the instructions given to install it before connecting the rest of the charger.

15. ELECTRICAL WIRING

A. This unit is intended for hard wiring in a permanent application. For supply connection use wires suitable for at least 90 degrees centigrade. Suitable hardware such as conduit or other appropriate electrical hardware should be selected consistent with applicable regulations.

B. Consult the wiring table for the appropriate wire gauge and avoid unnecessarily long runs of either AC or DC power.

Minimum Wire Size to Input of Charger, 120 VAC

Model	AC Amp	Length of Gauge of Wire		
	Max.	25'	50'	100'
AA1206	1.5	18 AWG	18 AWG	18 AWG
AA1210	2.5	18 AWG	18 AWG	16 AWG
AA1220	5.0	18 AWG	16 AWG	14 AWG
AA2406	3.0	18 AWG	18 AWG	16 AWG
AA2410	5.0	18 AWG	16 AWG	14 AWG
AA2420	10.0	16 AWG	14 AWG	10 AWG
AA3206	4.5	18 AWG	18 AWG	14 AWG
AA3210	8.0	18 AWG	14 AWG	12 AWG
AA3220	15.0	16 AWG	12 AWG	10 AWG

Minimum Wire Size to Input of Charger, 220 VAC

Model	AC Amp	Length of Gauge of Wire		
	Max.	25'	50'	100'
AA1206	1.5	18 AWG	18 AWG	18 AWG
AA1210	1.5	18 AWG	18 AWG	18 AWG
AA1220	3.0	18 AWG	18 AWG	16 AWG
AA2406	2.5	18 AWG	18 AWG	16 AWG
AA2410	3.0	18 AWG	18 AWG	16 AWG
AA2420	7.0	18 AWG	16 AWG	12 AWG
AA3206	3.0	18 AWG	18 AWG	16 AWG
AA3210	5.0	18 AWG	16 AWG	14 AWG
AA3220	10.0	16 AWG	14 AWG	10 AWG

Minimum Wire Size DC Output of Charger to Battery

Model	DC Amp Max.	Length of Gauge of Wire 25'	50'
AA1206	9	16 AWG	14 AWG
AA1210	15	14 AWG	12 AWG
AA1220	30	10 AWG	8 AWG
AA2406	9	16 AWG	14 AWG
AA2410	15	14 AWG	12 AWG
AA2420	30	10 AWG	8 AWG
AA3206	9	16 AWG	14 AWG
AA3210	15	14 AWG	12 AWG
AA3220	30	10 AWG	8 AWG

C. **CAUTION: NEVER WORK ON ANY ELECTRICAL EQUIPMENT WITHOUT FIRST DETERMINING THERE IS NO LIVE POWER. DOUBLE CHECK POWER CONNECTIONS AS WELL AS BATTERY TERMINATIONS.**

D. After the appropriate lengths and wire gauges have been selected, refer to the charger schematic for use in wiring. Note that the AC terminal strip is labeled 'B' and 'W' and a ground screw is provided. The AC wiring connection should be made to this point. The terminal marked 'B' should be connected to the Black (hot) AC input, the terminal marked 'W' should be connected to the White (neutral) input, and the ground screw should be connected to the Green wire (ground) of the AC input. See schematic diagram for more detail.

E. The output of the charger is found on the DC terminal strip labeled '+' and '-'. The black wire should be connected to the '-' terminal and the red wire connected to the '+' terminal. After you are certain all the electrical connections have been made correctly at both the battery charger, and most importantly, the battery , you may then close the cover and retain it securely with the two screws. You may now check the charger for proper operation. Apply power to the unit. You should see movement of the ammeter in a clockwise direction if the batteries are in need of a charge (there should be a slight movement even if the batteries are charged).
NOTE: If the ammeter should deflect in the opposite direction, counter-clockwise, or should move full scale indicating excessive current, disconnect unit immediately. It is likely that a wiring error has been made. Examine wiring instructions again to assure there are proper connections. If ammeter deflection is correct, you may assume the unit is working correctly.

F. If available, a voltmeter can be used to monitor the voltage at the battery when the battery charger is turned on. One should note an increase in voltage as the battery charger is applied. If there are problems in delivering power to the batteries, the circuit breaker should be inspected. If circuit breaker has been tripped, it indicates a circuit fault. Again, check wiring for possible problems.

16. OPERATING INSTRUCTIONS:

A. When properly installed and connected, the unit will maintain the batteries. Be sure to follow all precautions detailed in "IMPORTANT SAFETY INSTRUCTIONS" at the beginning of this manual. Abnormal conditions of loads may cause a circuit breaker to trip. The circuit breaker can be reset (push in fully) with power applied.

B. CAUTION: POWER MUST BE DISCONNECTED BEFORE OPENING COVER TO AVOID SHOCK AND POTENTIAL FOR EXPLOSION OR FIRE.

17. MAINTENANCE INSTRUCTIONS:

A. No maintenance is required other than cleaning of outside cabinet. A dry cloth can be used. It may be advisable to have a qualified service person check all connections for tightness. No adjustments are required.

B. IMPORTANT - CHECK BATTERY WATER LEVEL FREQUENTLY. LOW WATER LEVELS WILL DAMAGE BATTERIES.

18. DESCRIPTION OF OPERATION:

The four lights on the cover of the charger reflect the present state of the charger. The lights and their purpose are as follows:

RED	- HI DC	- On if the battery is above the high voltage limit.
RED	- LO DC	- On if the battery is below the low voltage limit.
YELLOW	- EQUALIZE	- On if the battery needs an equalize voltage.
GREEN	- AC ON	- On only if the AC power is being supplied.

NOTE: If both the green light and the yellow light are on, the unit is supplying an equalize voltage to the battery.

In normal operation the power light is on, the low and high voltage lights are off, and the equalize light may be on or off. The equalize light eventually shuts off when the battery voltage reaches the high voltage limit. The charger continuously monitors the battery voltage and at preset limits will automatically switch between a float voltage and an equalize voltage. The charger is shipped from the factory with the following preset limits.

BATTERY TYPE	VOLTAGE LIMITS PER CELL LOW DC	HIGH DC
LEAD ACID	2.12 VPC	2.33 VPC
NICKEL CADMIUM	1.45 VPC	1.55 VPC

Voltage adjustments can be made if needed. The potentiometers at the top edge of the circuit board marked HI and LO may be adjusted with a trim pot adjustment tool. Turn them CCW for higher limits and CW for lower limits. The new limit is set when the corresponding red light turns on. Different batteries have different recharge rates. Therefore, when adjusting the voltages it is important to make certain the charger is not switching between float and equalize too frequently as may happen with oversized chargers. This happens if the voltage limits are set too close together. If this occurs simply widen the range between the voltage limits until it does not happen.

An equalize voltage may be initiated manually by pressing the EQUALIZE button. The charger will enter the equalize mode and not resume a float voltage until the battery has reached the high voltage limit.

If unit fails to perform as described, please contact:

CHARLES INDUSTRIES, LTD.
(708) 806-6300
FAX (708) 806-6231

KATOLIGHT® CORPORATION

Engine Generator Set Float Charger

Model AE

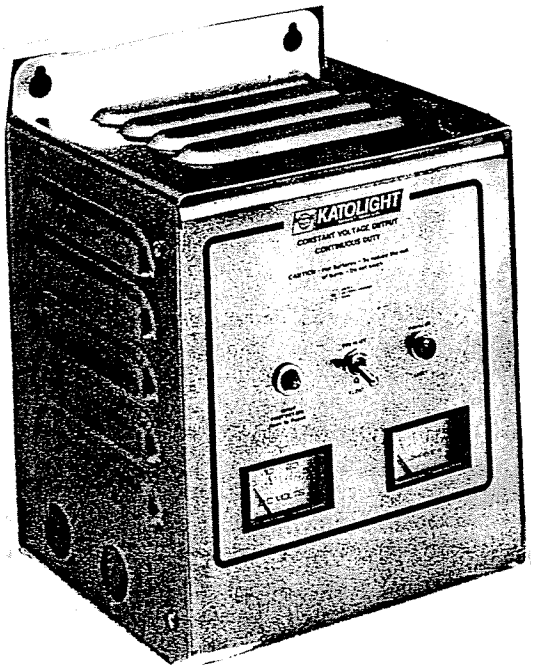

* U. L. Listed * Stainless Steel Casing * Ferroresonant transformer * Explosion Proof components *

Safe to say, there's no other float charger built like it. Rugged #304 grade stainless steel forms the tough housing that withstands virtually any environmental effects ... stifling heat, dripping wet humidity or salt air so strong it could almost crystalize while you watch! Consequentially, there's no rusting, no corrosion nor any fragile painted finishes to waste away.

Electrically, the **K-CHARGER** is a paragon of efficiency and simplicity. It uses a ferroresonant transformer which, by its nature, is self-regulating and completely devoid of any complicated switching circuits that could possibly burn out. There are no tubes nor delicate electronics to fail or to cause radio frequency interference (RFI).

Voltage output to the batteries remains at a safe and constant D.C. level from full load to no load even if the A.C. power runs as high as 135 VAC or as low as 100 VAC. All components are designed to operate safely and continuously in an ambient temperature as high as 122°F.

Katolight Corporation
100 Power Drive
PO Box 3229
Mankato, MN 56002-3229

AE1298

SPECIFICATIONS

Standard Accessories*

- DC ammeter
- DC voltmeter
- Equalize light
- Float - equalize switch
- AC circuit breaker
- Terminal board

Optional Accessories

- 0-24 Hour equalize timer
- Automatic 24 hour equalize timer
- Low DC voltage alarm relay
- High DC voltage alarm relay
- Current failure relay
- AC power failure relay
- DC cranking disconnect relay
- AC pilot light
- Drip shield

Specifications

- AC Input
  100-135 volts 60 Hz
  (220V 50 Hz optional)

Environmental

- Operating Temperature: 0 to 50°C (122°F)
- Storage Temperature: -20 to 60°C
- Relative Humidity: 0-95%
- Cooling: Convection

DC Output

- Float: 2.16 VPC for lead acid
  (1.45 VPC nickel cadmium)
- Equalize: 2.33 VPC lead acid
  (1.55 VPC nickel cadmium)
- Current limit at approximately 150%

Enclosure

304 stainless steel hinged cover
to facilitate installation

Model Number	D.C. Output		Height Inches	Width Inches	Depth Inches	Approx. Weight Lbs.
	Amps.	System Voltage				
12 Volt						
AE1206	6	12	11	9	8 1/2	12
AE1210	10	12	11	9	8 1/2	14
AE1220	20	12	11	9	8 1/2	22
AE1230	30	12	11	9	8 1/2	26
24 Volt						
AE2406	6	24	11	9	8 1/2	14
AE2410	10	24	11	9	8 1/2	22
AE2420	20	24	23	15	8 1/2	38
AE2430	30	24	23	15	8 1/2	55
AE2440	40	24	16	17	14 1/2	74

Typical Output Curve

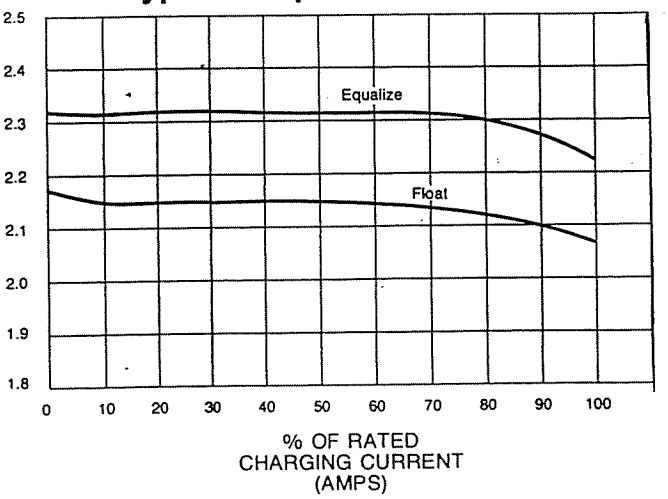

To order: Specify Model number, AC input: voltage and frequency, battery type and number of cells, ampere hour capacity of battery, recharge time desired, description of load.

KATOLIGHT BATTERY CHARGER

INSTALLATION - INSTRUCTION MANUAL

MODEL #AE

IMPORTANT SAFETY INSTRUCTIONS:
SAVE THESE INSTRUCTIONS

1. This manual contains important safety and operating instructions for battery chargers.

2. Before using battery charger, read all instructions and cautionary markings on the battery charger and batteries.

3. **CAUTION** - To reduce risk of injury, charge only lead acid or nickel cadmium type rechargeable batteries. Other types of batteries may burst, causing personal injury and damage.

4. Do not expose charger to rain or snow.

5. Use of attachments not recommended or sold by Katolight may result in a risk of fire, electrical shock or injuries to personnel.

6. Do not operate charger if it has received a sharp blow, been dropped or otherwise damaged in anyway. Take it to a qualified serviceman.

7. Do not disassemble charger. Take it to a qualified serviceman when service or repair is required. Incorrect assembly may result in risk of electrical shock or fire.

I. WARNING: RISK OF EXPLOSIVE GASES:

A. **Working in vicinity of a lead acid battery is dangerous. Batteries generate explosive gases during normal battery operation. For this reason, it is of utmost importance that each time before using your charger, you read this manual and follow the instructions exactly.**

B. To reduce the risk of battery explosion, follow these instructions and those published by battery manufacturer and manufacturer of any equipment you intend to use in the vicinity of the battery. Review cautionary markings on these products and on engine.

II. PERSONAL PRECAUTIONS:

A. Someone should be within range of voice or close enough to come to your aid when you work near a lead acid battery.

B. Have plenty of fresh water and soap nearby in case battery acid contacts skin, clothing or eyes.

C. Wear complete eye protection and clothing protection. Avoid touching eyes while working near battery.

D. If battery acid contacts skin or clothing, wash them immediately with soap and water. If acid enters eye, immediately flood eye with running cold water for at least ten minutes and get medical attention immediately.

E. **NEVER** smoke or allow a spark or flame in the vicinity of battery or engine.

F. Be extra cautious to reduce risk of dropping a metal tool onto battery. It might spark or short circuit battery or other electrical parts that may cause explosion.

G. Remove personal metal items such as rings, bracelets, necklaces and watches when working near a lead acid battery. A lead acid battery can produce a short circuit high enough to weld a ring or the like to metal, causing a severe burn.

H. Use charger for charging a **LEAD ACID** or **NICKEL CADMIUM** battery only. Other batteries may burst and cause injury to persons and damage to property.

I. **NEVER** charge a frozen battery.

PREPARING TO CHARGE

A. If necessary to remove battery, always remove grounded terminal from battery first. Make sure all accessories are off, so as not to cause an arc.

B. Be sure area around battery is well ventilated while battery is being charged.

C. Clean battery terminals - be careful to keep corrosion from coming in contact with eyes.

D. Add distilled water in each cell until battery acid reaches levels specified by battery manufacturer. This helps purge excessive gas from cells. Do not overfill. For a battery without cell caps, carefully follow manufacturer's recharging instructions.

E. Study all battery manufacturer's specific precautions, such as removing or not removing cell caps while charging and recommended rates of charge.

III. CHARGER LOCATION

A. Never place charger directly above battery being charged; gases from battery will corrode and damage charger.

B. Never allow battery acid to drop on charger when reading gravity or filling battery.

C. Do not operate charger in closed-in area or restrict ventilation in any way.

D. Do not set a battery on top of charger.

IV. SPARK NEAR THE BATTERY MAY CAUSE BATTERY EXPLOSION. TO REDUCE RISK OF A SPARK NEAR BATTERY:

A. Check polarity of battery posts. Positive (POS, P+) battery post usually has a larger diameter than negative (NEG, N-) post.

B. Attach at least a 24-inch-long 6-gauge (AWG) insulated battery cable to NEGATIVE (Neg, N, -) battery post.

C. Connect positive (red) charger wire to positive (POS, P+) post of battery.

D. Position yourself and free end of cable as far away from battery as possible. Then connect negative (black) charger wire to free end of cable.

E. Do not face battery when making final connections.

F. When disconnecting charger, always do so in reverse sequence of connecting procedure and break first connection while as far away from battery as practical.

GROUNDING INSTRUCTIONS:

This battery charger should be connected to a grounded metal permanent wiring system or an equipment grounding conductor should be run with circuit conductors and connected to equipment grounding terminal or lead on battery charger. Connections to battery charger should comply with all appropriate codes and ordinances.

INSTALLATION:

1. This battery charger should be installed so that it is not likely to be contacted by people.

2. Select a dry area as close to the batteries to be charged as possible. Avoid high temperature areas and observe that unit is not exposed to rain or spray.

3. When selecting mounting position, observe wiring access is provided at either right or left locations. The unit should be mounted vertically.

4. The charger should be mounted to the surface using fasteners. They should be sufficient length to assure a vibration-free mounting. All fasteners should be corrosion-resistant and the preferred fastener is a machine bolt backed up with a flat washer and lock washer as well as a nut.

ELECTRICAL WIRING

1. This unit is intended for hard wiring in a permanent application. For supply connection use wires suitable for at least 90 degrees centigrade. Suitable hardware such as conduit or other appropriate electrical hardware should be selected consistent with applicable regulations.

2. Consult the wiring table for the appropriate wire gauge and avoid unnecessarily long runs or either AC or DC power.

MINIMUM WIRE SIZE TO INPUT OF CHARGER: 120 VAC				
Model	AC Amp Max.	Length of Gauge of Wire 25'	50'	100'
AE 1206	1	18 AWG	18 AWG	18 AWG
AE 1210	2	18 AWG	18 AWG	16 AWG
AE 1220	3	18 AWG	16 AWG	16 AWG
AE 1230	4.5	16 AWG	16 AWG	14 AWG
AE 2406*	2	18 AWG	18 AWG	16 AWG
AE 2410	3	18 AWG	16 AWG	16 AWG
AE 2420	6	16 AWG	14 AWG	14 AWG
AE 2430	9	14 AWG	14 AWG	12 AWG

MINIMUM WIRE SIZE OUTPUT OF CHARGER TO BATTERY			
Model	DC Amp Max.	Length of Gauge of Wire 15'	25'
AE 1206	9	16 AWG	14 AWG
AE 1210	15	14 AWG	12 AWG
AE 1220	30	10 AWG	8 AWG
AE 1230	45	8 AWG	6 AWG
AE 2406*	9	16 AWG	14 AWG
AE 2410	15	14 AWG	12 AWG
AE 2420	30	10 AWG	8 AWG
AE 2430	45	8 AWG	6 AWG

*UL Listed

CAUTION: NEVER WORK ON ANY ELECTRICAL EQUIPMENT WITHOUT FIRST DETERMINING THERE IS NO LIVE POWER. DOUBLE CHECK POWER CONNECTIONS AS WELL AS BATTERY TERMINATIONS.

After the appropriate lengths and wire gauges have been selected, refer to the charger schematic for use in wiring. Note that the terminal strip, TB, is labeled one, two, and ground lug. The AC wiring connection should be made to this point. The number one terminal should be connected to the Black (hot) AC input, terminal number two should be connected to the White (neutral) input and ground lug should be connected to the Green wire (ground) of the AC input. See schematic diagram for more detail.

The output of the charger is found on terminal board #2 (TB2). On TB2, the black wire should be connected to terminal 1 (-). The red wire should be connected to terminal 2 (+). After you are certain all the electrical connections have been made correctly at both the battery charger, and most importantly, the battery, you may then close cover and retain it securely with the two screws. You may now check the charger for proper operation. Apply power to the unit. You should see movement of the ammeter in a clockwise direction if the batteries are in need of a charge (there should be a slight movement even if the batteries are charged.)

NOTE: If the ammeter should deflect in the opposite direction, counter-clockwise, or should move full scale indicating excessive current, disconnect unit immediately. It is likely that a wiring error has been made. Examine wiring instructions again to assure there are proper connections. If ammeter deflection is correct, you may assume the unit is working correctly.

If available, a volt meter can be used to monitor the voltage at the battery when the battery charger is turned on. One should note an increase in voltage as the battery charger is applied. If there are problems in delivering power to the batteries, the circuit breaker should be inspected. If circuit breaker has been tripped, it indicates a circuit fault. Again, check wiring for possible problems.

CAUTION: POWER MUST BE DISCONNECTED BEFORE OPENING COVER TO AVOID SHOCK AND POTENTIAL FOR EXPLOSION OR FIRE.

If unit fails to perform as described, please contact:

KATOLIGHT CORPORATION
3201 Third Avenue
Mankato, MN 56001
Phone: (507) 625-7973
Fax: (507) 625-2968

OPERATING INSTRUCTIONS:

When properly installed and connected, the unit will maintain the batteries. Be sure to follow all precautions detailed in "IMPORTANT SAFETY INSTRUCTIONS" at the beginning of this manual. Abnormal conditions of loads may cause a circuit breaker to trip.

CAUTION: POWER MUST BE DISCONNECTED BEFORE OPENING COVER TO AVOID SHOCK AND POTENTIAL FOR EXPLOSION OR FIRE.

Circuit breaker can be reset (push in fully) with power applied.

The unit is equipped with a float/equalize switch. Consult battery instructions for proper use. Normally switch is in the float position. The equalize light indicates when charger is in equalize mode.

MAINTENANCE INSTRUCTIONS:

No required maintenance other than cleaning of outside cabinet. A dry cloth can be used. No adjustments are required. It may be advisable to have a qualified service person check all connections for tightness.

IMPORTANT -- CHECK BATTERY WATER LEVEL FREQUENTLY. LOW WATER LEVELS WILL DAMAGE BATTERIES.

REV	ECO	BY	CH	DATE
A	1074	DH	[illegible]	12-23-85
B	1148	DH	[illegible]	4-2-86
C	1182	DH	MJ	6-4-86
D	1199	DH	MJ	7-22-86
E	1643	[illegible]	[illegible]	2/15/89

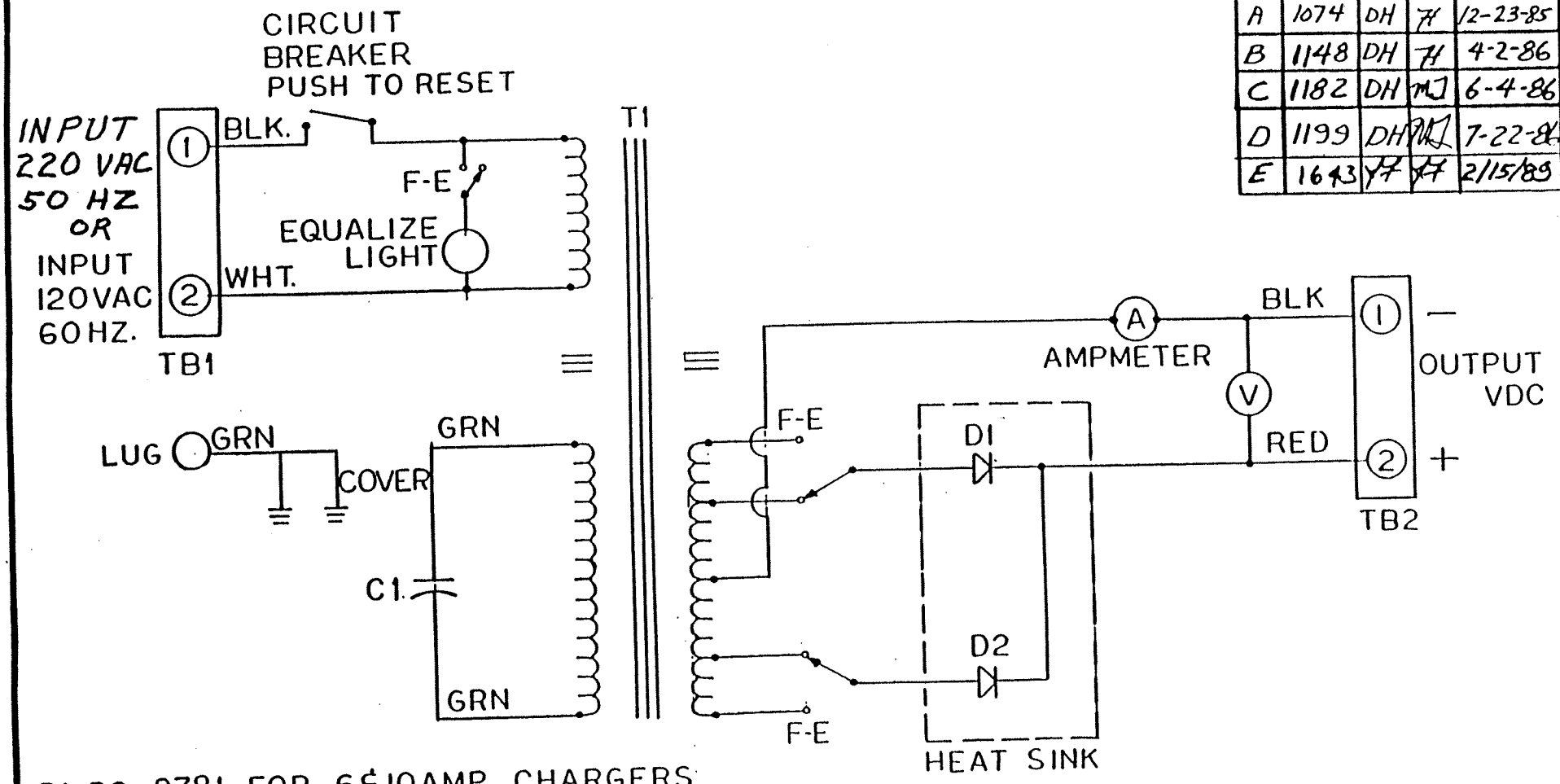

D1-D2=8781 FOR 6&10AMP. CHARGERS
7075 FOR 20&30AMP CHARGERS

F-E (FLOAT EQUALIZE) SWITCH
SHOWN IN FLOAT POSITION

BATTERY CHARGER SCHEMATIC MODEL AE

SCALE: -/-	ACCURATE ELECTRONICS DIV.
TOLERANCES 3 PL. DECIMAL ± 2 PL. DECIMAL ± FRACTIONS ± ANGLES ±	DATE 12-16-85 APPROVED [illegible]
FIRST USED ON	ENGR [illegible] DRN DH
MAT'L	DWG NO 8385 PAGE 1 of 1 REV B
FINISH	

NOTICE: THIS DOCUMENT CONTAINS PROPRIETARY INFORMATION AND IS NOT TO BE USED OR DISCLOSED WITHOUT EXPRESS WRITTEN PERMISSION.

Lightweight On-Board Power Tender

Models: 12V6A, 24V3A

HIGHLIGHTS

- High frequency switching power converter
- True DC output at a maximum power level of approximately 70 watts
- A variety of software configurations are available



DESCRIPTION

The lightweight, on-board, power tender, battery charger is a high frequency switching power converter that has a true DC output at a maximum power level of approximately 70 watts. The most common output voltage and current configurations are defined as models in the title block. Check with the factory for other output voltage and current configurations that may be available. Also, a variety of software configurations are available: Standard; Sealed, VRLA, GRT, AGM (Hawker/Optima); and GEL.

STANDARD FEATURES

OUTPUT CABLE CONNECTIONS: The battery charger is equipped with an SPT-2 type output cable with two output leads. The positive polarity output lead has a 3/8" diameter ring terminal with a red molded polymer insulation cylinder. The negative polarity output lead has a 5/16" diameter ring terminal with a black molded polymer insulation cylinder.

The standard unit does not have a quick disconnect output cable harness. Quick disconnect output cable harnesses may be available on a special order basis. The price for units with this modification will be higher than those units shown on the standard price list. The price will depend on the volume purchased.

STATUS INDICATOR LIGHTS: The following describes the operation of the status indicator lights:

- RED - When the red light is on, the battery charger is in the process of fully charging the battery. In order to properly charge large capacity batteries, the charger may remain in this mode for several hours or even days.
- GREEN FLASHING (Hawker/Optima [Sealed, GRT, AGM] Models only) - When the green light is flashing, and the red light is on, the battery is greater than 80% charged and may be removed from the charger and used if necessary. Leave the battery on charge until the green light is solid whenever possible. This will occur approximately 8 hours after the green light begins flashing.
- GREEN - When the green light is lit, the battery charger is in the storage mode of charge. In this mode the charger will maintain the battery at full charge. If the battery becomes partially discharged due to an external current draw or excessive internal battery losses, the charger will automatically switch itself back to the charge mode of operation.
- ALTERNATING RED AND GREEN - When the lights switch back and forth, the battery charger is connected to the battery with the polarity reversed.

SPECIAL TROUBLESHOOTING INFORMATON

NEITHER OF THE CHARGER STATUS INDICATOR LIGHTS TURN ON:

- Disconnect the charger AC power plug from the AC outlet and recheck that the battery charger alligator clips or ring terminals are connected to the correct polarity battery terminals and that they are making a clean, tight connection.
- Check to make sure that the AC outlet is supplying power by plugging in another appliance like a lamp, or check the outlet voltage with a voltmeter.

THE STORAGE/FLOAT MAINTENANCE STATUS INDICATOR LIGHT (GREEN LIGHT) GOES ON IMMEDIATELY WHEN CHARGING A BATTERY KNOWN TO BE DISCHARGED:

- The battery may be defective. Take the battery to the dealer to be tested.
- The electrical connections between the charger and the battery may not be completely secured.

AFTER THE STORAGE/FLOAT MAINTENANCE STATUS INDICATOR LIGHT (GREEN LIGHT) HAS BEEN ON, AND THE AC POWER IS REMOVED FROM THE CHARGER AND THEN IMMEDIATELY RECONNECTED, IT SEEMS TO TAKE TOO MUCH TIME FOR THE GREEN LIGHT TO COME ON AGAIN.

- This is NORMAL OPERATION for the LWOB Power Tender.
- Whenever AC power is removed from the charger, including momentary AC power outages, the charge cycle resets. Therefore, depending on the software version, several hours may elapse (8 hours on the Sealed, VRLA, GRT, AGM, Hawker, Optima) before the green light stops flashing.

AFTER THE STORAGE/FLOAT MAINTENANCE STATUS INDICATOR LIGHT (GREEN LIGHT) HAS BEEN ON, THE RED LIGHT COMES ON.

- This is NORMAL OPERATION for the LWOB Power Tender.
- There has been a momentary AC power outage that reset the charge cycle.
- There is some other load or appliance drawing power from the battery. When the battery voltage drops below 12.0V to 12.5V (on 12 volt models), the charge cycle resets.

Lightweight On Board (Power Tender) 12V, 24V, STD		
Charger Specification Summary		
SOFTWARE:	**STANDARD**	
Deltran Part Number:	**022-0076-1, -2**	**022-0086-1, -2**
Nominal Output:		
Voltage:	**12 Volts**	**24 Volts**
Current:	**6 Amps**	**3 Amps**
Input Voltage: **(Factory Selectable)**	with **–1** part number suffix **90 to 132 VAC** with **–2** part number suffix **180 to 264 VAC**	
Input Frequency:	47 to 62 Hz	
Maximum Input Current:	1.61 Arms @ 90 VAC 0.81 Arms @ 180 VAC	
Nominal Efficiency:	80%	
Nominal Power Factor:	0.6	
Charger Output:		
Maximum Power: @ 25 °C	70 Watts (+2, -5) Watts	
Maximum Current: During Bulk Charge	6.0 Amps (+/- 10%)	3.0 Amps (+/- 10%)
Absorption Voltage:	14.5 VDC = (2.42 vpc)	28.8 VDC = (2.4 vpc)
Absorption to Float Transition:	Charge Current drops: **below 3.0 Amps.**	Charge Current drops: **below 1.0 Amp.**
Equalization Voltage:	NA	
Float Voltage:	13.2 VDC = (2.2 vpc)	26.4 VDC = (2.2 vpc)
Charge Reset: Battery Voltage Threshold:	12 to 12.5 VDC (2 to 2.08 vpc)	24 to 24.5 VDC (2 to 2.04 vpc)
Output Regulation:		
Line (Typical):	1%	
Electrical Isolation:		
Input / Output:	2500 VAC	
Input / Chassis:	2500 VAC	
Output / Chassis:	500 VAC	
Operating Temp:	-20°C to 50°C	
Dimensions:	5 in(127)L **x** 4.9 in(125)W **x** 2 in(51)H	
Weight:	21 oz.	
Carton Size:	6 in(153 mm)L **x** 6 in(153 mm)W **x** 6 in(153 mm)H	
Shipping Weight:	2 lbs.	
Enclosure:	Powder Coated Aluminum Chassis	
Special Features:		
Short Circuit Protection:	YES	
Reverse Polarity Protection:	YES	
Spark Proof:	NO	
Temperature Compensation:	NO	
Agency Listings: UL, ETL, CSA, etc.	Selected models are listed to UL-1236 and CSA 22.2 Contact the office in DeLand, FL for information on agency listings. Phone: 386-736-7900	

TABLE 1 Spec Sheet: LWOB Power Tender (12V, 24V Standard)

Lightweight On Board (Power Tender) 12V, 24V, AGM		
Charger Specification Summary		
SOFTWARE:	**Sealed/VRLA/GRT/AGM (Valve Regulated Lead Acid / Gas Recombinant Technology /Absorbed Glass Matte)**	
Deltran Part Number:	**022-0071-1, -2**	**022-0073-1, -2**
Nominal Output:		
Voltage:	**12 Volts**	**24 Volts**
Current:	**6 Amps**	**3 Amps**
Input Voltage: (Factory Selectable)	with **–1** part number suffix **90 to 132 VAC** with **–2** part number suffix **180 to 264 VAC**	
Input Frequency:	47 to 62 Hz	
Maximum Input Current:	1.61 Arms @ 90 VAC 0.81 Arms @ 180 VAC	
Nominal Efficiency:	80%	
Nominal Power Factor:	0.6	
Charger Output:		
Maximum Power: @ 25 °C	70 Watts (+2, -5) Watts	
Maximum Current: During Bulk Charge	6.0 Amps (+/- 10%)	3.0 Amps (+/- 10%)
Absorption Voltage:	14.9 VDC = (2.48 vpc)	29.8 VDC = (2.48 vpc)
Absorption to Float Transition:	Absorption Charge **Duration is Fixed at 8 Hours.**	
Equalization Voltage:	NA	
Float Voltage:	13.6 VDC = (2.27 vpc)	27.2 VDC = (2.27 vpc)
Charge Reset: Battery Voltage Threshold:	12 to 12.5 VDC (2 to 2.08 vpc)	24 to 24.5 VDC (2 to 2.04 vpc)
Output Regulation:		
Line (Typical):	1%	
Electrical Isolation:		
Input / Output:	2500 VAC	
Input / Chassis:	2500 VAC	
Output / Chassis:	500 VAC	
Operating Temp:	-20°C to 50°C	
Dimensions:	5 in(127)L **x** 4.9 in(125)W **x** 2 in(51)H	
Weight:	21 oz.	
Carton Size:	6 in(153 mm)L **x** 6 in(153 mm)W **x** 6 in(153 mm)H	
Shipping Weight:	2 lbs.	
Enclosure:	Powder Coated Aluminum Chassis	
Special Features:		
Short Circuit Protection:	YES	
Reverse Polarity Protection:	YES	
Spark Proof:	NO	
Temperature Compensation:	NO	
Agency Listings: UL, ETL, CSA, etc.	Selected models are listed to UL-1236 and CSA 22.2 Contact the office in DeLand, FL for information on agency listings. Phone: 386-736-7900	

TABLE 2 Spec Sheet: LWOB Power Tender (12V, 24V AGM)

Lightweight On Board (Power Tender) 12V GEL	
Charger Specification Summary	
SOFTWARE:	**GEL**
Deltran Part Number:	**022-0083-1, -2**
Nominal Output:	
Voltage:	**12 Volts**
Current:	**6 Amps**
Input Voltage: **(Factory Selectable)**	with **–1** part number suffix **90 to 132 VAC** with **–2** part number suffix **180 to 264 VAC**
Input Frequency:	47 to 62 Hz
Maximum Input Current:	1.61 Arms @ 90 VAC 0.81 Arms @ 180 VAC
Nominal Efficiency:	80%
Nominal Power Factor:	0.6
Charger Output:	
Maximum Power: @ 25 °C	70 Watts (+2, -5) Watts
Maximum Current: During Bulk Charge	6.0 Amps (+/- 10%)
Absorption Voltage:	14.1 VDC = (2.35 vpc)
Absorption to Float Transition:	Charge Current drops: **below 3.0 Amps.**
Equalization Voltage:	NA
Float Voltage:	13.2 VDC = (2.2 vpc)
Charge Reset: Battery Voltage Threshold:	12 to 12.5 VDC (2 to 2.08 vpc)
Output Regulation:	
Line (Typical):	1%
Electrical Isolation:	
Input / Output:	2500 VAC
Input / Chassis:	2500 VAC
Output / Chassis:	500 VAC
Operating Temp:	-20°C to 50°C
Dimensions:	5 in(127)L **x** 4.9 in(125)W **x** 2 in(51)H
Weight:	21 oz.
Carton Size:	6 in(153 mm)L **x** 6 in(153 mm)W **x** 6 in(153 mm)H
Shipping Weight:	2 lbs.
Enclosure:	Powder Coated Aluminum Chassis
Special Features:	
Short Circuit Protection:	YES
Reverse Polarity Protection:	YES
Spark Proof:	NO
Temperature Compensation:	NO
Agency Listings: UL, ETL, CSA, etc.	Selected models are listed to UL-1236 and CSA 22.2 Contact the office in DeLand, FL for information on agency listings. Phone: 386-736-7900

TABLE 3 Spec Sheet: LWOB Power Tender (12V GEL)

LIGHT WEIGHT ON-BOARD 12V6A Models:

12V6A STANDARD:

Stage 1) Bulk Charge: Red Light On, Green Light Off, Constant Current = 5.5 Amps, Transition to Stage 2, Absorption Charge when battery voltage reaches 14.5 VDC.

Stage 2) Absorption Charge: Red Light On, Absorption Voltage = 14.5 VDC Transition to Float Charge when battery charging current drops below 3.0 amps.

Stage 3) There is no Equalization Charge, Go directly to stage 4.

Stage 4) Float Charge: Red Light Off, Green Light On. Float Voltage = 13.2 VDC. If an external load is applied to the battery while the charger is in stage 4, Float Charge, and if the battery voltage drops below a range between 12.0 to 12.5 VDC, then the charge cycle restarts.

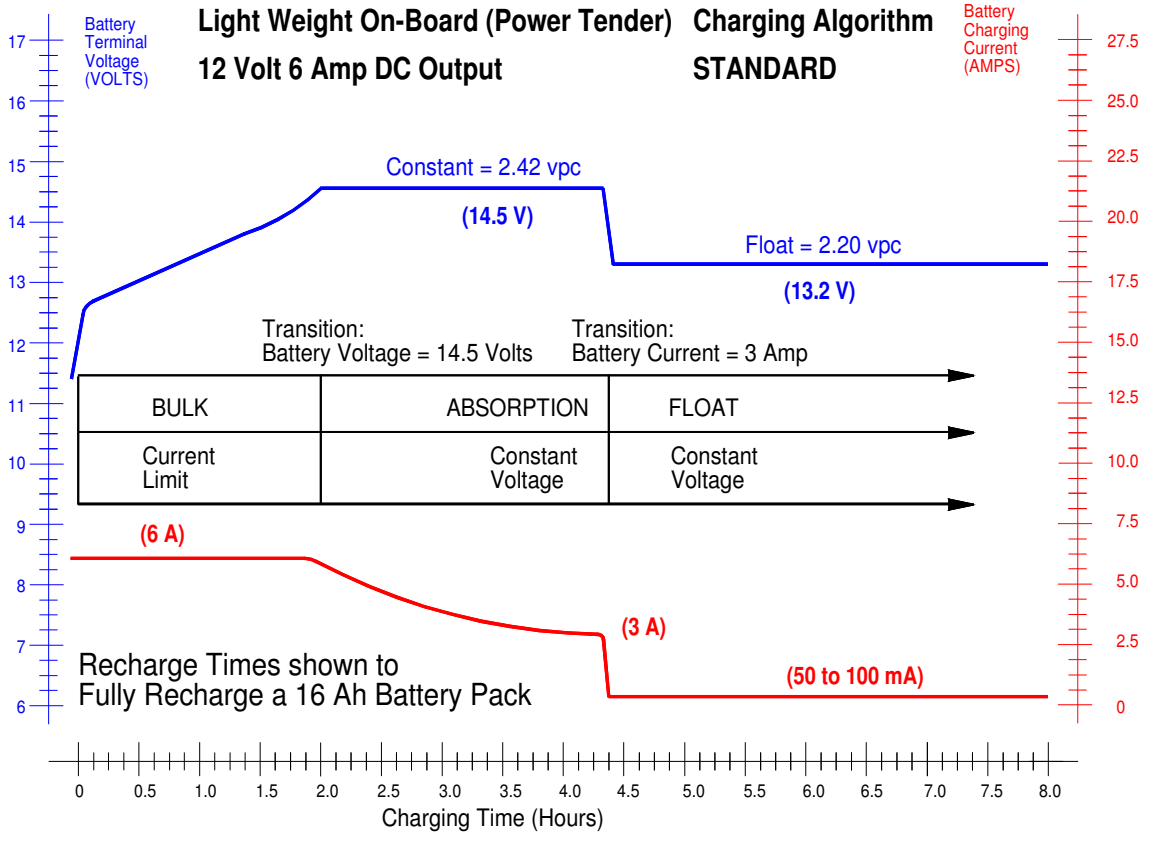

FIGURE 1 Charging Graph: LWOB Power Tender 12V6A STD

LIGHT WEIGHT ON-BOARD 12V6A Models:

12V6A Sealed/VRLA/GRT/AGM (Hawker/Optima):

Stage 1) Bulk Charge: Red Light On, Constant Current = 5.5 Amps, Transition to Stage 2, Absorption when battery voltage reaches 14.9 VDC.

Stage 2) Absorption Charge: Red Light On, Green Light Flashing, Absorption Voltage = 14.9 VDC Transition to Float Charge 8 hours after entering stage 2.

Stage 3) There is no Equalization Charge, Go directly to stage 4.

Stage 4) Float Charge: Red Light Off, Green Light On. Float Voltage = 13.6 VDC. If an external load is applied to the battery while the charger is in stage 4, Float Charge, and if the battery voltage drops below a range between 12.0 to 12.5 VDC, then the charge cycle restarts.

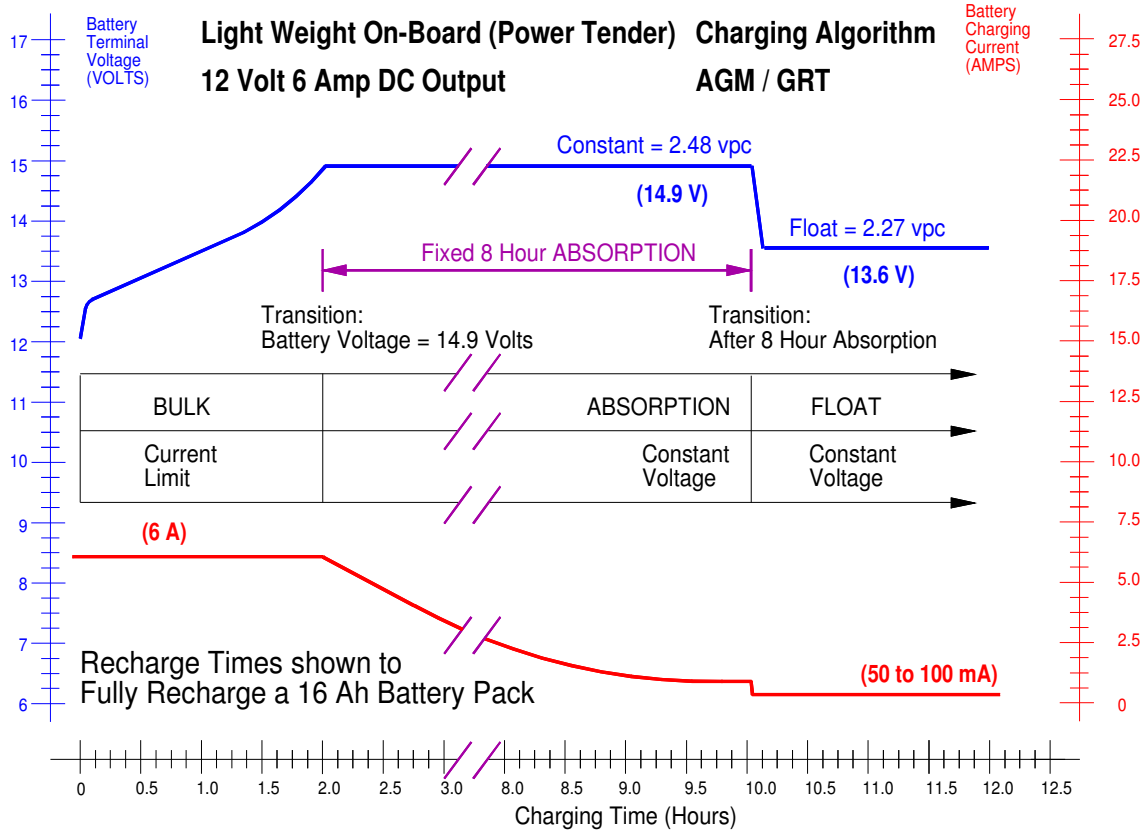

FIGURE 2 Charging Graph: LWOB Power Tender 12V6A AGM

LIGHT WEIGHT ON-BOARD 12V6A Models:

12V6A GEL:

Stage 1) Bulk Charge: Red Light On, Green Light Off, Constant Current = 5.5 Amps, Transition to Stage 2, Absorption Charge when battery voltage reaches 14.1 VDC.

Stage 2) Absorption Charge: Red Light On, Absorption Voltage = 14.1 VDC Transition to Float Charge when battery charging current drops below 3.0 amps.

Stage 3) There is no Equalization Charge, Go directly to stage 4.

Stage 4) Float Charge: Red Light Off, Green Light On. Float Voltage = 13.2 VDC. If an external load is applied to the battery while the charger is in stage 4, Float Charge, and if the battery voltage drops below a range between 12.0 to 12.5 VDC, then the charge cycle restarts.

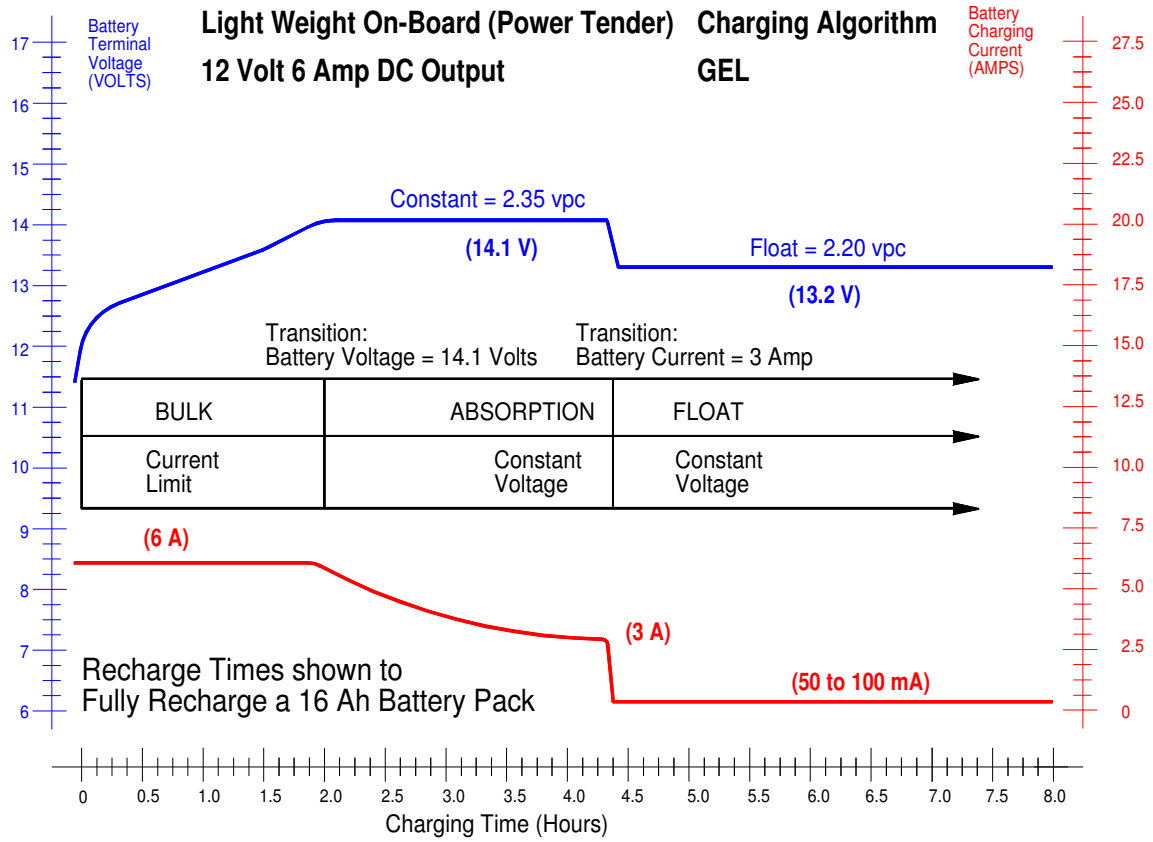

FIGURE 3 Charging Graph: LWOB Power Tender 12V6A GEL

LIGHT WEIGHT ON-BOARD 24V3A Models:

24V3A STANDARD:

Stage 1) Bulk Charge: Red Light On, Green Light Off, Constant Current = 3.0 Amps, Transition to Stage 2, Absorption Charge when battery voltage reaches 29.0 VDC.

Stage 2) Absorption Charge: Red Light On, Absorption Voltage = 29.0 VDC Transition to Float Charge when battery charging current drops below 1.0 amp.

Stage 3) There is no Equalization Charge, Go directly to stage 4.

Stage 4) Float Charge: Red Light Off, Green Light On. Float Voltage = 26.4 VDC. If an external load is applied to the battery while the charger is in stage 4, Float Charge, and if the battery voltage drops below a range between 24.0 to 25.0 VDC, then the charge cycle restarts.

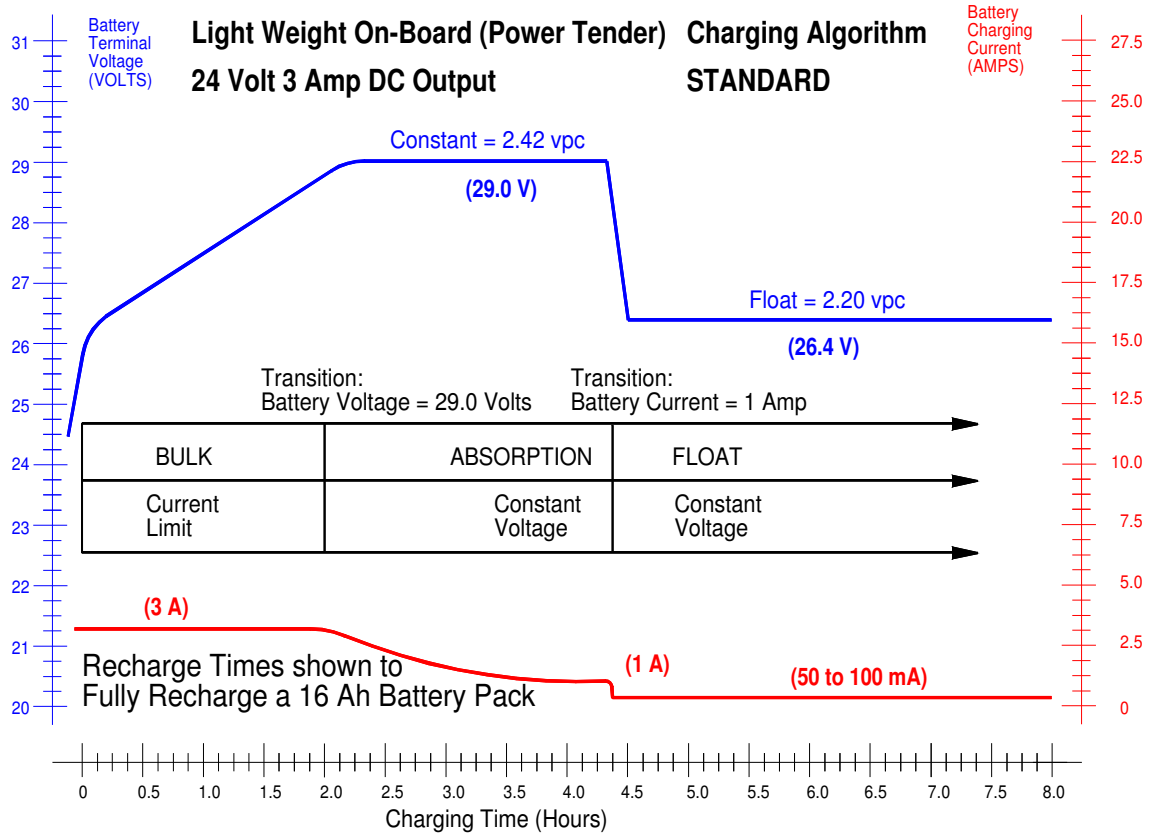

FIGURE 4 Charging Graph: LWOB Power Tender 24V3A STD

LIGHT WEIGHT ON-BOARD 24V3A Models:

24V3A Sealed/VRLA/GRT/AGM (Hawker/Optima):

Stage 1) Bulk Charge: Red Light On, Constant Current = 3.0 Amps, Transition to Stage 2, Absorption when battery voltage reaches 29.8 VDC.

Stage 2) Absorption Charge: Red Light On, Green Light Flashing, Absorption Voltage = 29.8 VDC Transition to Float Charge 8 hours after entering stage 2.

Stage 3) There is no Equalization Charge, Go directly to stage 4.

Stage 4) Float Charge: Red Light Off, Green Light On. Float Voltage = 27.2 VDC. If an external load is applied to the battery while the charger is in stage 4, Float Charge, and if the battery voltage drops below a range between 12.0 to 12.5 VDC, then the charge cycle restarts.

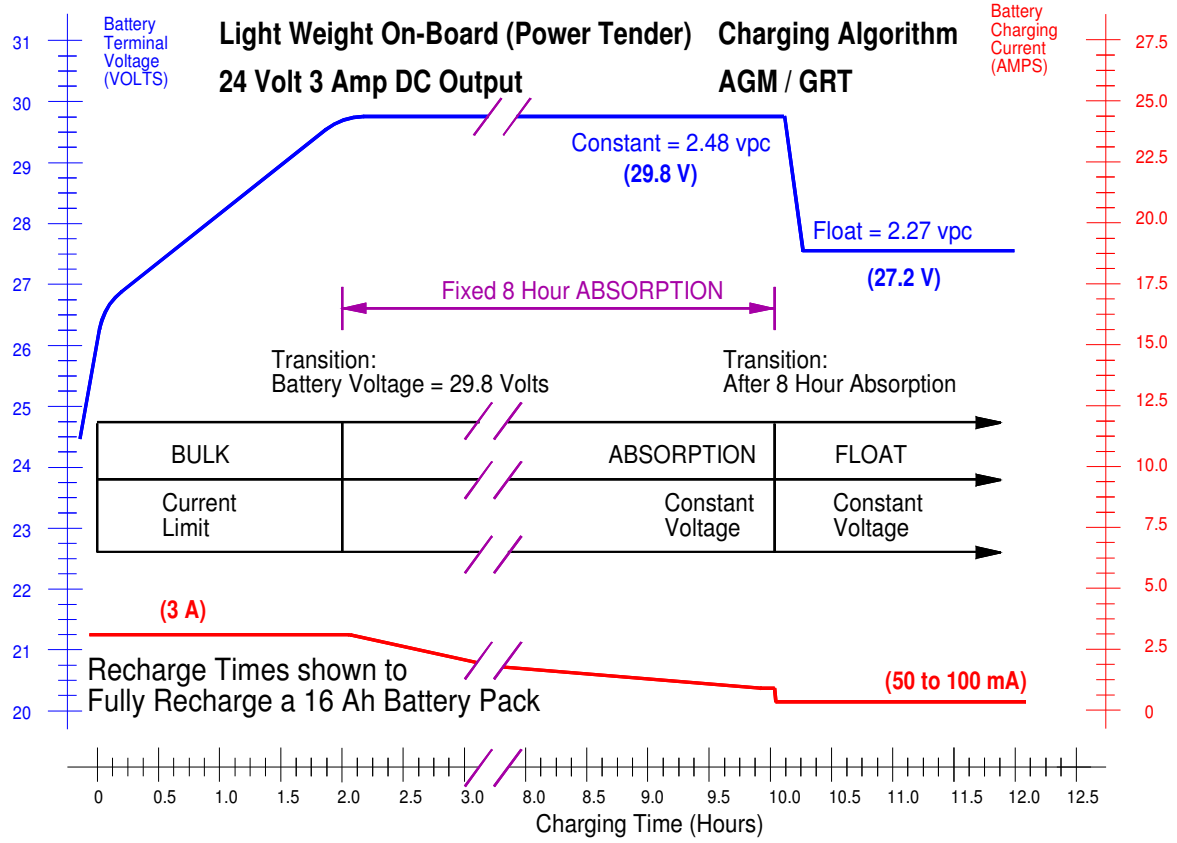

FIGURE 5 Charging Graph: LWOB Power Tender 24V3A AGM

Materials and specifications subject to change without notice.
© Katolight Corporation. 100 Power Drive, Mankato, MN 56001

KATOLIGHT®
CORPORATION

Automatic Float Battery Charger
Model CI

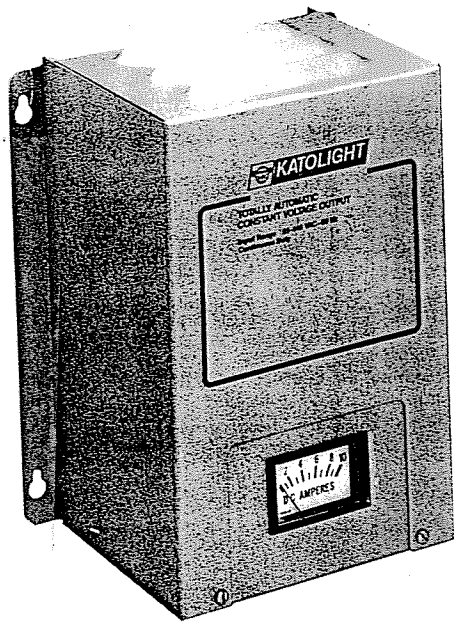

* U. L. Listed * Stainless Steel Casing * Ferroresonant transformer * Explosion Proof components *

Fully automatic - DC ammeter to indicate charge rate

Safe to say, there's no other float charger built like it. Ruggeed #304 grade stainless steel forms the tough housing that withstands virtually any enviromental effects...stifling heat, dripping wet humidity or salt air so strong it could almost crystalize while you watch! Consequentlly, there's no rusting, no corrision nor any fragile painted finishes to waste away.

Electrically, the **K-CHARGER** is a paragon of efficiency and simplicity. It uses a ferroresonant transformer which, by its nature, is self-regulating and completely devoid of any complicated switching circuits that could possibly burn out. There are no tubes nor delicate electronics to fail or to cause radio frequency interference (RFI).

Voltage output to the batteries remains at a safe and constant D.C. level from full load to no load even if the A.C. power runs as high as 135 VAC or as low as 100 VAC. All componets are designed to operate safely and continuously in an ambient termperature as high as 122°F.

SPECIFICATIONS

Standard Accessories

- DC ammeter
- On - Off Switch
- Pilot Light
- AC Circuit Breaker
- DC Output Fuse
- Terminal board

Optional Accessories

- Charge Dividers

Enclosure

Stainless steel hinged cover
to facilitate installation

Environmental

- Operating Temperature: 0 to 50°C (125°F)
- Storage Temperature: -20 to 60°C
- Relative Humidity: 0-95%
- Cooling: Convection

Model Number	D.C. Output		Height Inches	Width Inches	Depth Inches	Approx. Weight Lbs.
	Amps.	System Voltage				
12 Volt						
CI1205C	5	12	9 1/2	7 1/2	5	9
CI1210C	10	12	9 1/2	7 1/2	5	12
CI1215A	15	12	9 1/2	7 1/2	5	16
CI1220C	20	12	11	9	8 1/2	22
CI1230C	30	12	11	9	8 1/2	26
CI1260C	60	12	23	15	8 1/2	55
24 Volt						
CI2405C	5	24	11	9	8 1/2	14
CI2410C	10	24	11	9	8 1/2	22
CI2420C	20	24	23	15	8 1/2	38
CI2430C	30	24	23	15	8 1/2	55
CI2440C	40	24	16	17	14 1/2	74
CI2460C	60	24	24	17	14 1/2	110

Typical Output Curve

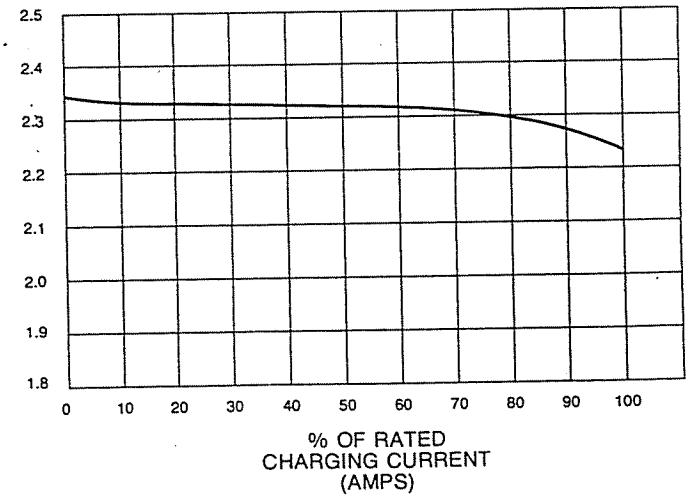

To order: Specify Model number, AC input: voltage and frequency, battery type and number of cells, ampere hour capacity of battery, recharge time desired, description of load.

Katolight Corporation
100 Power Drive
PO Box 3229
Mankato, MN 56002-3229

KATOLIGHT BATTERY CHARGER

INSTALLATION - INSTRUCTION MANUAL

MODEL #CI

IMPORTANT SAFETY INSTRUCTIONS:
SAVE THESE INSTRUCTIONS

1. This manual contains important safety and operating instructions for battery chargers.

2. Before using battery charger, read all instructions and cautionary markings on the battery charger and batteries.

3. **CAUTION** - To reduce risk of injury, charge only lead acid or nickel cadmium type rechargeable batteries. Other types of batteries may burst, causing personal injury and damage.

4. Do not expose charger to rain or snow.

5. Use of attachments not recommended or sold by Katolight may result in a risk of fire, electrical shock or injuries to personnel.

6. Do not operate charger if it has received a sharp blow, been dropped or otherwise damaged in anyway. Take it to a qualified serviceman.

7. Do not disassemble charger. Take it to a qualified serviceman when service or repair is required. Incorrect assembly may result in risk of electrical shock or fire.

I. WARNING: RISK OF EXPLOSIVE GASES:

A. Working in vicinity of a lead acid battery is dangerous. Batteries generate explosive gases during normal battery operation. For this reason, it is of utmost importance that each time before using your charger, you read this manual and follow the instructions exactly.

B. To reduce the risk of battery explosion, follow these instructions and those published by battery manufacturer and manufacturer of any equipment you intend to use in the vicinity of the battery. Review cautionary markings on these products and on engine.

II. PERSONAL PRECAUTIONS:

A. Someone should be within range of voice or close enough to come to your aid when you work near a lead acid battery.

B. Have plenty of fresh water and soap nearby in case battery acid contacts skin, clothing or eyes.

C. Wear complete eye protection and clothing protection. Avoid touching eyes while working near battery.

D. If battery acid contacts skin or clothing, wash them immediately with soap and water. If acid enters eye, immediately flood eye with running cold water for at least ten minutes and get medical attention immediately.

E. **NEVER** smoke or allow a spark or flame in the vicinity of battery or engine.

F. Be extra cautious to reduce risk of dropping a metal tool onto battery. It might spark or short circuit battery or other electrical parts that may cause explosion.

G. Remove personal metal items such as rings, bracelets, necklaces and watches when working near a lead acid battery. A lead acid battery can produce a short circuit high enough to weld a ring or the like to metal, causing a severe burn.

H. Use charger for charging a **LEAD ACID** or **NICKEL CADMIUM** battery only. Other batteries may burst and cause injury to persons and damage to property.

I. **NEVER** charge a frozen battery.

PREPARING TO CHARGE

A. If necessary to remove battery, always remove grounded terminal from battery first. Make sure all accessories are off, so as not to cause an arc.

B. Be sure area around battery is well ventilated while battery is being charged.

C. Clean battery terminals - be careful to keep corrosion from coming in contact with eyes.

D. Add distilled water in each cell until battery acid reaches levels specified by battery manufacturer. This helps purge excessive gas from cells. Do not overfill. For a battery without cell caps, carefully follow manufacturer's recharging instructions.

E. Study all battery manufacturer's specific precautions, such as removing or not removing cell caps while charging and recommended rates of charge.

III. CHARGER LOCATION

A. Never place charger directly above battery being charged; gases from battery will corrode and damage charger.

B. Never allow battery acid to drop on charger when reading gravity or filling battery.

C. Do not operate charger in closed-in area or restrict ventilation in any way.

D. Do not set a battery on top of charger.

IV. SPARK NEAR THE BATTERY MAY CAUSE BATTERY EXPLOSION. TO REDUCE RISK OF A SPARK NEAR BATTERY:

A. Check polarity of battery posts. Positive (POS, P+) battery post usually has a larger diameter than negative (NEG, N-) post.

B. Attach at least a 24-inch-long 14-gauge (AWG) insulated battery cable to NEGATIVE (Neg, N, -) battery post.

C. Connect positive (red) charger wire to positive (POS, P+) post of battery.

D. Position yourself and free end of cable as far away from battery as possible. Then connect negative (black) charger wire to free end of cable.

E. Do not face battery when making final connections.

F. When disconnecting charger, always do so in reverse sequence of connecting procedure and break first connection while as far away from battery as practical.

GROUNDING INSTRUCTIONS:

This battery charger should be connected to a grounded metal permanent wiring system or an equipment grounding conductor should be run with circuit conductors and connected to equipment grounding terminal or lead on battery charger. Connections to battery charger should comply with all appropriate codes and ordinances.

INSTALLATION:

1. This battery charger should be installed so that it is not likely to be contacted by people.

2. Select a dry area as close to the batteries to be charged as possible. Avoid high temperature areas and observe that unit is not exposed to rain or spray.

3. When selecting mounting position, observe wiring access is provided at either right or left locations. The unit should be mounted vertically.

4. The charger should be mounted to the surface using fasteners. They should be sufficient length to assure a vibration-free mounting. All fasteners should be corrosion-resistant and the preferred fastener is a machine bolt backed up with a flat washer and lock washer as well as a nut.

ELECTRICAL WIRING

1. This unit is intended for hard wiring in a permanent application. For supply connection use wires suitable for at least 90 degrees centigrade. Suitable hardware such as conduit or other appropriate electrical hardware should be selected consistent with applicable regulations.

2. Consult the wiring table for the appropriate wire gauge and avoid unnecessarily long runs or either AC or DC power.

MINIMUM WIRE SIZE TO INPUT OF CHARGER: 120 VAC				
Model	AC Amp Max.	Length of Gauge of Wire 25'	50'	100'
CI1205C	1.5	18AWG	18AWG	16AWG
CI1210C	4	18AWG	16AWG	14AWG
CI1215C	5	18AWG	16AWG	14AWG
CI1220C	6	18AWG	16AWG	14AWG
CI1230C	8	16AWG	16AWG	14AWG
CI1240C	12	14AWG	12AWG	10AWG
CI1260C	15	12AWG	10AWG	8AWG
CI2405C	2.5	18AWG	16AWG	14AWG
CI2410C	6	18AWG	16AWG	14AWG
CI2420C	12	14AWG	12AWG	10AWG
CI2430C	15	12AWG	10AWG	8AWG
CI2440C	20	12AWG	10AWG	8AWG
CI3210C	8	16AWG	16AWG	14AWG
CI3220C	15	12AWG	10AWG	8AWG
.CI3230C	20	12AWG	10AWG	8AWG
C3240C	25	10AWG	8AWG	6AWG
INPUT 220 VAC, 50 HZ				
CI1205C	1	18AWG	18AWG	16AWG
CI1220C	3	18AWG	16AWG	14AWG
CI1230C	4	18AWG	16AWG	14AWG
CI1240C	5	18AWG	16AWG	14AWG
CI1206C	7.5	16AWG	16AWG	14AWG
CI2405C	1.5	18AWG	18AWG	16AWG
CI2440C	8.5	16AWG	16AWG	14AWG

MINIMUM WIRE SIZE OUTPUT OF CHARGER TO BATTERY			
Model	DC Amp Max.	Length of Gauge of Wire 15'	25'
CI1205C	7.5	16AWG	14AWG
CI1210C	15	14AWG	12AWG
CI1215C	22	12AWG	10AWG
CI1220C	30	10AWG	8 AWG
CI1230C	45	8 AWG	6 AWG
CI1240C	60	6 AWG	4 AWG
CI1260C	90	4 AWG	2 AWG
CI2405C	7.5	16AWG	14AWG
CI2410C	15	14AWG	12AWG
CI2420C	30	10AWG	8 AWG
CI2430C	45	8AWG	6AWG
CI2440C	60	6 AWG	4AWG
CI3210C	15	14AWG	12AWG
CI3220C	30	10AWG	8 AWG
CI3230C	45	8AWG	6AWG
CI3240C	60	6AWG	4AWG

CAUTION: NEVER WORK ON ANY ELECTRICAL EQUIPMENT WITHOUT FIRST DETERMINING THERE IS NO LIVE POWER. DOUBLE CHECK POWER CONNECTIONS AS WELL AS BATTERY TERMINATIONS.

WIRING CONNECTIONS

After the appropriate lengths and wire gauges have been selected, refer to the charger schematic for use in wiring. Note that the terminal strip, TB1, is labeled B and W. The AC wiring connection should be made to this point. The W and B terminals should be connected to the White (neutral) input and Black (hot) input respectively. The ground screw marked GND should be connected to the Green wire (ground) of the AC input. See Schematic diagram for more detail.

The output of the charger is found on terminal board #2 (TB2). On TB2, the black wire should be connected to terminal 2 (-). The red wire should be connected to terminal 1 (+). After you are certain all the electrical connections have been made correctly at both the battery charger, and most importantly, the battery, you may then close cover and retain it securely with the two screws.

OPERATING INSTRUCTIONS:

When properly installed and connected, the unit will maintain the batteries. Be sure to follow all precautions detailed in "IMPORTANT SAFETY INSTRUCTIONS" at the beginning of this manual. Abnormal conditions of loads may cause the circuit breaker to trip.

You may now check the charger for proper operation. Apply power to the unit. You should see movement of the ammeter in a clockwise direction if the batteries are in neeed of a charge (there should be a slight movement even if the batteries are charged).

NOTE: If the ammeter should deflect in the opposite direction, counter-clockwise, or should move full scale indicating excessive current, disconnect unit immediately. It is likely that a wiring error has been made. Examine wiring instructions again to assure there are proper connections. If ammeter deflection is correct, you may assume the unit is working correctly.

The AMP meter can be used to monitor the amperage at the battery when the battery charger is turned on. One should note an increase in amperage as the battery charger is applied. If there are problems in delivering power to the batteries, the wiring should be inspected.

CAUTION: POWER MUST BE DISCONNECTED BEFORE OPENING COVER TO AVOID SHOCK AND POTENTIAL FOR EXPLOSION OR FIRE.

If unit fails to perform as described, please contact:

KATOLIGHT CORPORATION
3201 Third Avenue
Mankato, MN 56001
Phone: (507) 625-7973
Fax: (507) 625-2968

MAINTENANCE INSTRUCTIONS:

No required maintenance other than cleaning of outside cabinet. A dry cloth can be used. No adjustments are required. It may be advisable to have a qualified service person check all connections for tightness periodically.

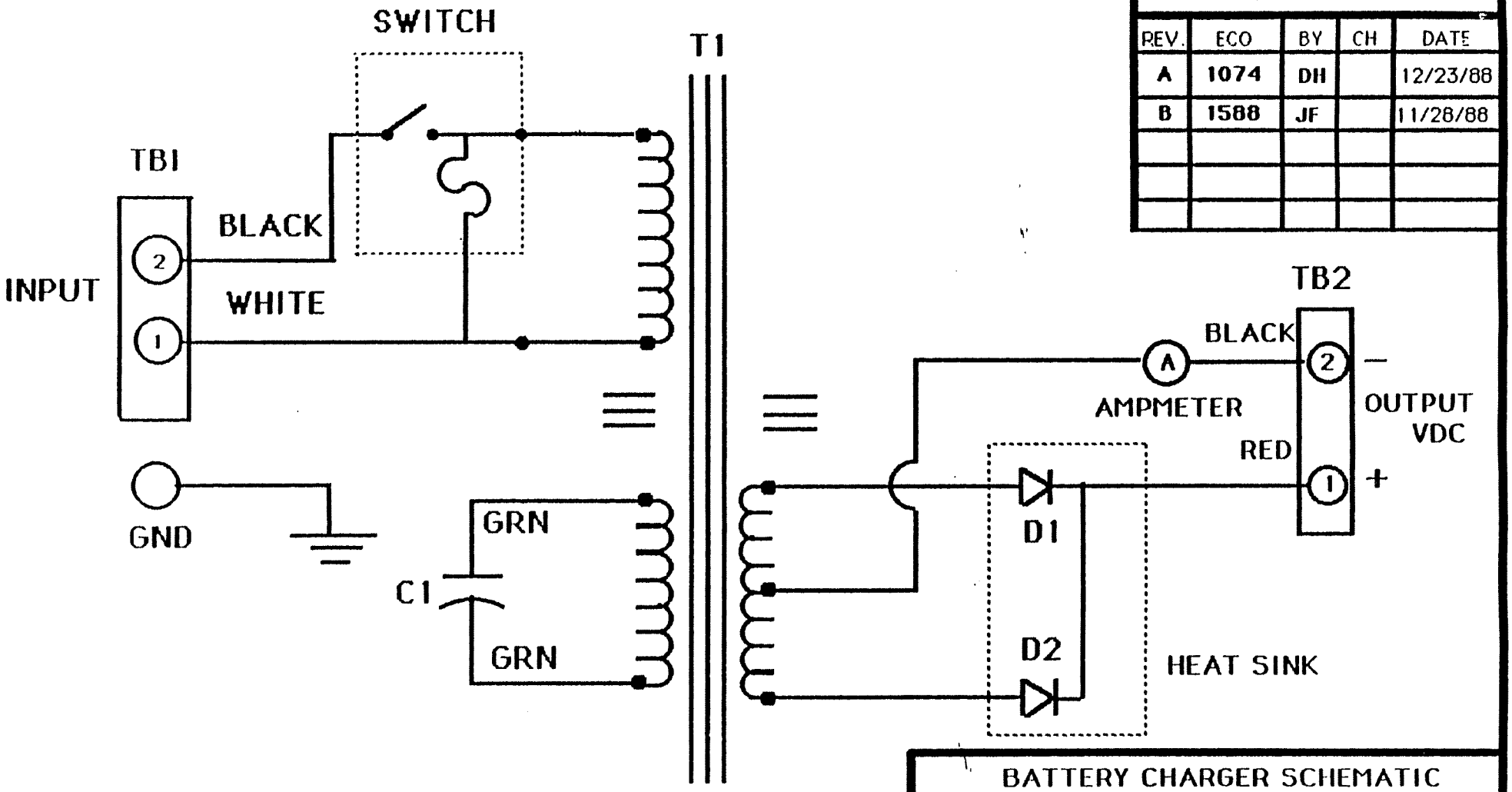

DWG NO:	8460			
REV.	ECO	BY	CH	DATE
A	1074	DH		12/23/88
B	1588	JF		11/28/88

NOTE: SWITCH MAY BE DELETED ON SOME MODELS

BATTERY CHARGER SCHEMATIC
MODEL Ci C

SCALE: NONE	Ci Charles Industries, Ltd.
TOLERANCES 3 PL. DECIMAL 2 PL. DECIMAL FRACTIONS ANGLES	DRN: ETS DATE: 09/29/88
	ENGR: JGF APPR:
FIRST USED ON: 19166	DWG NO.: 8460 PAGE: _
MATL: NONE	REV.: B
FINISH: NONE	

NOTICE: THIS DOCUMENT CONTAINS PROPRIETARY INFORMATION AND IS NOT TO BE USED OR DISCLOSED WITHOUT EXPRESS WRITTEN CONSENT FROM CHARLES INDUSTRIES, LTD.

Katolight Service - Master Repair Manual - Page 2359

FC/FCA
12, 24 & 32 VOLT, 20 & 25 AMP

BATTERY CHARGER
OPERATION & MAINTENANCE GUIDE

Dependable Power Solutions . . . It's All We Do!

100 Power Drive Mankato, MN 56001
Phone 507.625.7973 Fax 507.625.2968 Toll Free 800.325.5450 www.katolight.com
FC-FCA_20-25AMP_KL_Manual_9-02

IMPORTANT SAFETY INSTRUCTIONS

SAVE THESE INSTRUCTIONS

This manual contains important safety and operating instructions for Stored Energy Systems (SENS) model battery charger model FC.

Before using the battery charger, read all instructions and cautionary markings on the battery charger, battery and equipment connected to the battery system.

Before You Begin

Particular attention should be paid to three types of notices throughout this guide. These are as follows:

WARNING: is used in this manual to warn of possible personal or property injury

CAUTION: *is used in this manual to warn of possible equipment damage*

NOTE: is used in this manual to provide advice on how to obtain maximum performance, reliability or life from components of your system.

WARNING: Please read these safety warnings and heed them. Failure to do so could result in either severe personal injury or equipment damage.

To reduce the risk of injury, charge only properly sized lead-acid or nickel cadmium batteries. Other types of batteries or under-sized batteries may burst causing personal injury and damage.

- Do not install or operate charger if it has been dropped or otherwise damaged. Return it to the factory for repair.
- Install the charger in accordance with all local codes.
- Do not expose charger to rain or snow.
- Do not disassemble charger; return to factory when service or repair is required. Incorrect assembly may result in a risk of electric shock or fire.
- To reduce risk of electric shock, de-energize and disconnect the AC input and the battery from the charger before attempting maintenance or cleaning.
- Use of an accessory not recommended or sold by SENS may result in a risk of fire, electric shock or personal injury.
- During normal operation, batteries may produce explosive hydrogen gas. *Never smoke, use an open flame, or create sparks near the battery or charger.*
- Remove jewelry, watches, rings, etc. before installing battery or charger.

1 READ THIS FIRST

CAUTION: Failure to follow installation instructions may cause equipment damage, or void the equipment warranty. READ THESE INSTRUCTIONS BEFORE PROCEEDING!

- The charger *must* be connected to a battery for it to operate properly (see Section 4.1). If the charger is feeding a load and charging a battery, disconnecting the battery will cause the output voltage to rise to unsafe levels with possible damage to connected loads. *Always disconnect the AC mains power before disconnecting the battery from the charger.* If the charger is not connected to a battery it will operate at approximately half its rated voltage, and the alarm relays (if the unit is so equipped) will chatter.

- Do not connect the battery leads to the charger backwards. Doing so will blow the output fuse when the charger is energized

- Changing factory-set potentiometers *voids the warranty.* Contact the factory if the settings on your charger are incorrect.

Before determining that the charger is not working correctly, check the following:

1. Is AC power available to the charger?
2. Are any fuses blown?
3. Is the charger connected to a battery of the correct voltage?
4. Was the charger damaged in transit or installation?
5. If you determine that the charger is not working because it is not putting out any current, check the battery's state of charge. If the battery is fully charged it is perfectly normal for the charger to indicate zero current flow. See Figure 4.1.
6. If the battery is being over- or undercharged, check whether the output voltage settings have been tampered with. The pots should be covered with either white adhesive paper dots or a hard red varnish.

2 Overview

This manual covers installation, operation and troubleshooting of 20 & 25 amp SENS battery chargers type FC and FCA. Complete parts lists and board-level documentation is not included; these are available separately from SENS.

Please follow the installation and use instructions. They are vital to the satisfactory operation of the charger. Service information is provided for the benefit of customers experienced in the service of power conversion equipment. If there are any doubts about adjusting, maintaining or servicing the equipment, return the charger to the factory for adjustment/repair.

2.1 Description, Product Features & Application

Stored Energy Systems' FC chargers are fully automatic battery chargers that automatically recharge and maintain lead-acid and nickel-cadmium batteries. The chargers offer the following standard features:

- Constant voltage output
- Electronic current limiting
- Automatic equalize
- True Voltage Sensing (charger senses battery voltage at battery - no extra leads needed)
- Temperature compensation to maximize battery performance and life
- Complete alarm system meeting NFPA 110 (FCA only)
- Input and output circuit breakers

Three features in particular maximize battery performance and life:

- *Temperature Compensation* - helps ensure that the battery is fully charged at low ambient temperatures but not overcharged at high ambient temperatures.
- *Autoboost* - automatic two-rate charge feature operates in response to the battery's current demand
- *True Voltage Sensing* - automatically compensates for voltage drop in the charging leads

2.2 Upon Delivery

Inspect the charger for damage caused during transit, and report damage to the carrier immediately. Then contact SENS to determine how best to repair/replace the damaged unit.

2.3 Specifications

Input voltage and frequency
Voltage and frequency are as indicated in the part number and on the serial number label: Possibilities are 120 volt 60 Hz, 230 volt 60 Hz, 230 volt 50 Hz or 277 volt 60 Hz.

Output voltage
- Standard 12, 24 & 32 volts
- Float voltage adjustable from 90% to 120% of nominal. Boost voltage adjustable up to 15% above float voltage

Voltage regulation
Temperature-compensated voltage regulation is better than 1% from no load to full load with simultaneous variations in input voltage of 10% and frequency of 5%

True voltage sensing
The charger always provides the correct voltage to the battery regardless of voltage drop in charging leads

Current limiting & overload protection
Inherent current limited at 100% to 110% of rated output

Temperature compensation
Output voltage changes in accordance with negative temperature coefficient of battery (-0.12% per degree F). This maximizes battery performance and life.

Protection
Current limited output; sustains short circuit
Standard AC and DC circuit breakers

Indicators
• DC voltmeter
• DC ammeter
• Alarms (FCA only):

Alarm	Indicator	FCA model suffix
AC on	LED	
Low battery voltage	LED & form C contact	-2231, -2431
Charger failure	LED & form C contact	-2231, -2431
AC fail	LED & form C contact	-2431 only
High battery voltage	LED & form C contact	-2431 only

Delay circuitry in the charger failure, low battery and high battery alarm systems prevents spurious indications

Controls & adjustments
• Separate adjustments for float & boost voltages
• Separate adjustments for low and high DC alarms (FCA only)
• Optional boost timer (0-24 hours or 0-72 hours)

Ambient
Operates without de-rating from -10C to +50C. Humidity 5% to 95%, non-condensing. Natural convection cooled.

3 Installation

3.1 Mounting *(for dimensions, refer to drawings at end of manual)*

Mount on a clean, dry, fixed wall which is protected from extremes of temperature. Allow at least 6 inches above and below the unit, and three inches either side for proper ventilation. The unit must be mounted vertically.
Mounting screw size should be #10 minimum.

If the charger must be mounted on or in a vibrating enclosure, the mounting arrangement should be designed to provide full vibration isolation.

Long battery cable runs, while not generally acceptable, are not a problem with the FC series charger. SENS True Voltage Sensing circuit automatically compensates for voltage drop in the charging leads.

Protect the charger from construction grit, metal chips, paint or other debris. Clean away

debris after installation.

3.2 Power Connections

Connection should be made by a qualified installer. Remove the two screws securing the charger's top front panel to gain access to the connections.

Use AWG #8 or larger wire for DC (charger to battery) leads.
Use AWG #12 or larger wire for AC input and ground connections.

WARNING: The battery charger should be connected to a grounded permanent wiring system. A ground stud is provided for this purpose

Knockouts accommodating 1/2" conduit and fittings are located on each side of the charger. Run the AC wiring independent of the DC and alarm wiring.

The voltmeter will show battery voltage as soon as the FC connection is completed. *Check the voltmeter as soon as the FC connection has been made.* If the meter reads zero or is deflecting below zero, reverse the polarity of the battery connections. The charger will be damaged if it is operated into a backwards connected battery.

3.3 Alarm Connections *(pertains only to FCA models)*

Refer to the alarm installation drawings at the end of this manual for connection instructions..

Alarm relays are rated for a maximum of 2 amps at 24 volts DC, or 0.5 amps at 32 volts DC (non-inductive loads only). Connect the alarm relay to customer-supplied supervisory system only -- *do not apply AC power to the relays and* do not exceed the relays' ratings.

There are two versions of FCA alarm board; both meet NFPA 110:

Condition	LED Indicator	Form C contact with Model # suffix
AC on	Green LED	none
Low battery voltage	Amber LED	-2231, -2431
Charger failure	Red LED	-2231, -2431
AC fail	Red LED	-2431 only
High battery voltage	Red LED	-2431 only

4 Using Charger

4.1 Charger Features

FC/FCA chargers feature soft start circuitry which causes a gradual increase in output power after application of AC power. The Autoboost system causes the charger initially to operate at the high rate. When the charger reaches the boost voltage set point, and current has dropped to between 50% to 70% of the charger's rating, the charger will revert to the float mode.

The transition from boost to float will result in the battery drawing no current from the charger. Once the battery voltage nears the float setting, the charger will again deliver a small amount of current to the battery to maintain the battery at its fully charged state. Figure 4 is a graph of how the Autoboost system works.

The battery charger is temperature compensated to match the negative temperature coefficient of the battery. Thus the float voltage will increase slightly as the temperature decreases, and decrease as temperature increases. The battery charger is electronically current limited to 110% of rated output. The charger will decrease its current output when the battery voltage is lower than nominal.

FIGURE 4

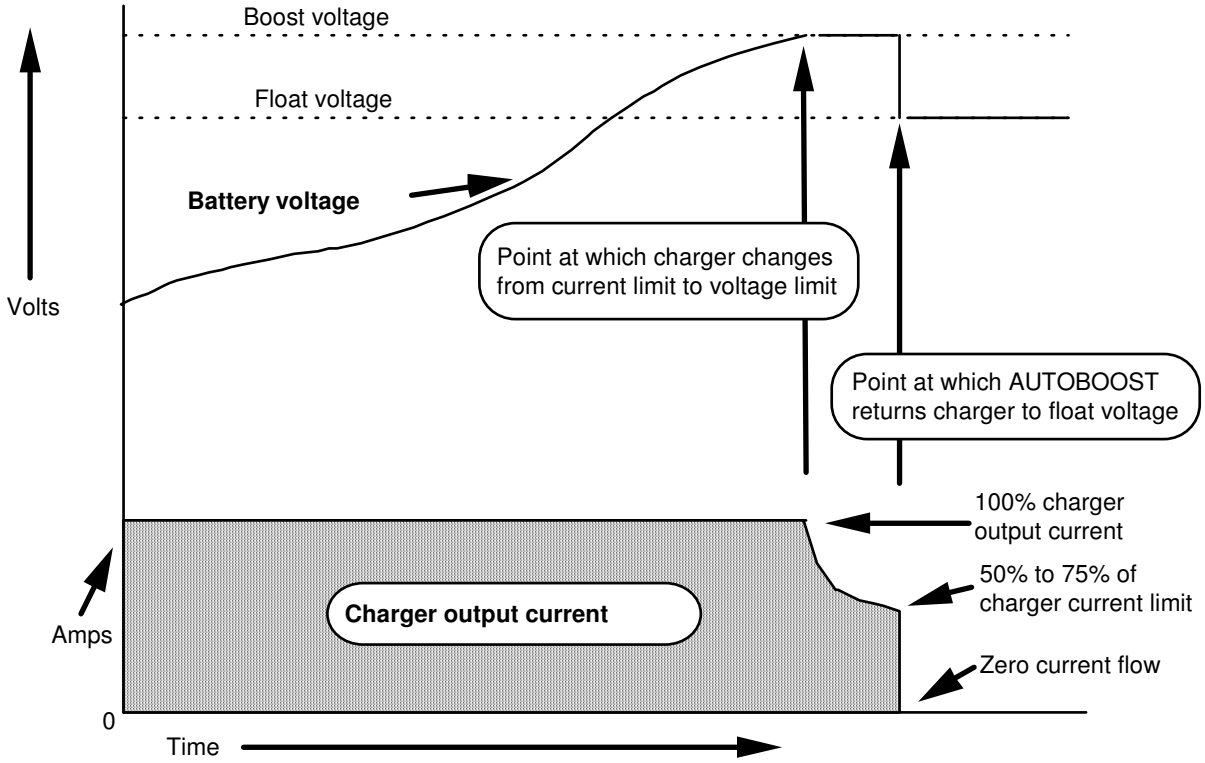

NOTE: When the charger switches from BOOST to FLOAT mode, no current will flow into the battery for a while due to the battery's high state of charge. **This is completely normal, and indicates that the charger is working properly.**

4.2 Ammeter and Voltmeter

The voltmeter and ammeter (and alarm LEDs on the FCA models) provide indication of normal operation. Correct operation is indicated when the voltmeter reads 110% to 120% of nominal battery voltage. High current flow indicates that the battery has been discharged, and is being recharged. Low current flow normally indicates that the battery is fully charged. The charger will at times read 0 amps. This most commonly happens after the charger has reverted from the boost (or high rate) charge to float charge. *Do not* automatically assume that the charger has failed if the ammeter reads 0 amps!

4.3 Alarm Operation *(pertains only to FCA models)*

The alarm LEDs have the following meanings:

Power on: AC power is available to the charger

Charge fail: The charger senses voltage rather than current to detect "failure"; once battery voltage drops approximately 1 volt below nominal the alarm activates. This may occur when:
a) The battery is fully discharged
b) The AC power has failed, and the battery has become discharged
c) There is an excessive load on the charger (not a charger failure)
d) The charger has failed

There is a time delay of approximately one minute between the start of the alarm condition and the actual alarm signal. This prevents spurious indications during short-term deep battery discharge (as would happen during engine cranking). The delay period can be adjusted. See section.5.3

AC fail There is no AC power to the charger. This indicates either:
a) The AC power has failed
b) The input fuse is blown

High battery: Indicates that the output voltage is above a preset, adjustable point. The control circuit may have malfunctioned, or it could be misadjusted. In some cases, long leads of small gauge wire to the batteries cause a high battery alarm. The charger's *True Voltage Sensing* circuit automatically compensates for voltage drop in the charging leads. If charging leads are too small, the charger will operate at a high voltage to overcome high resistance in the leads. The alarm indication is made as soon as the alarm condition begins and lasts for approximately one minute after the alarm condition ends.

Low battery: Indication is made when the battery voltage is below a preset, adjustable point. This may occur when:
a) The AC power has failed and the battery has become discharged
b) The charger has malfunctioned
c) The battery is defective

There is a delay of approximately one minute between the start of the alarm condition and the alarm signal. This prevents false indications due to engine cranking or other temporary deep battery discharge. The delay period can be adjusted. Consult the factory.

The FCA's alarm system includes a Form C contacts. The contacts change position whenever the associated alarm is activated.

5
Adjustments

Customer service of the charger is recommended only if the technician is experienced in electrical
and electronic equipment. If a trained technician is not available, return the charger to the factory
for adjustment.

Instructions for charger adjustment are found on the following pages.

5.1 Adjusting the Charger Output Voltage

NOTE: There are two ways to adjust the charger voltage. The first method requires only an external precision voltmeter. The second method takes less time, but requires a 40 volt, 100,000 micro farad capacitor and an adjustable load.

NOTE: The charger can *not* be correctly adjusted without either a battery or the capacitor mentioned above. SENS' True Voltage Sensing circuit senses battery voltage only between charging current pulses. The charger will provide its correct voltage only when a battery is connected.

All chargers *(adjustment procedure where capacitor and & load bank are **not** available)*

Use an external precision voltmeter connected to either the battery or the charger output terminals. Make all adjustments in small increments to allow the battery voltage level to react to the new setting. The adjustments must be made while the battery is connected to the charger, so some patience will be required.

1. Open lower front panel to gain access to control circuit. The top cover hinges upward, the lower cover hinges downward.
2. Remove protective paper dots from potentiometers labeled FLOAT and BOOST.
3. Turn boost voltage pot fully counter clockwise.
4. Adjust float pot in small increments until the battery reaches the desired voltage. The current output should be in the range of 1 to 2 amps. As it takes the battery time to react to voltage changes, some patience will be required.
5. Turn the boost pot fully clockwise (maximum output voltage).
   Now adjust the boost charge voltage as described below:

Different adjustment procedures are used for AUTOBOOST and timed boost chargers.

AUTOBOOST chargers only *(not equipped with a timer)*

6. Put the charger in the AUTOBOOST mode by partially discharging the battery, then removing and restoring the charger's AC power source.

7. Allow the battery voltage to rise to the desired high rate charge level. Once at this voltage, carefully turn the boost pot counter-clockwise until the charger ammeter suddenly drops to approximately zero amps.
8. Charger is now adjusted. Replace paper dots and close front cover.

Chargers with timed boost

6. Turn timer knob to start high rate charging.
7. Allow the battery voltage to rise to the desired high rate charge level. The battery should be discharged so that charger is producing between 60% and 100% of its rated current. Once at the desired boost voltage, carefully turn the boost pot counter-clockwise until the charger ammeter drops noticeably (to between 1/2 and 2 amps).
8. Charger is now adjusted. Replace paper dots and close front cover.

Alternative adjustment procedure using capacitor and load bank -- all chargers

The capacitor and adjustable load take the place of a battery, so you do not have to wait for the battery voltage to increase or decrease to new output voltage levels. The time delays in the alarm circuit, however, cannot be defeated.

Connect the capacitor in parallel with the output terminals, making sure that the polarity is correct. Use the same general adjustment procedure as the "all chargers" section above; setting changes, however, do not have to be made in small increments. For the float adjustment, adjust the load bank so that the charger puts out about one amp. For the boost adjustment, adjust the load bank so that the charger puts out about 80% of its rated current. This high load causes AUTOBOOST chargers to switch to high rate charge.

5.2 Factory-Set Output Voltages

Chargers set for lead-acid battery

	12 volt	24 volt	32 volt
Float voltage	13.3	26.6	35.5
Boost voltage	14.0	28.0	37.3

Chargers set for nickel cadmium battery

	12 volt	24 volt	32 volt
Float (# cells), voltage	(10) 14.3	(19) 27.2 (20) 28.6	(25) 35.8 (27) 38.6
Boost (# cells), voltage	(10) 15.2	(19) 28.6 (20) 30.0	(25) 37.5 (27) 40.5

5.3 Adjusting Alarm Voltage Levels

Three alarm adjustments are possible: charger failure alarm, low battery voltage alarm and hig battery voltage alarm. The location of the adjustment potentiometers is shown in a drawing at end of this guide. Use an external precision voltmeter connected directly to the charger's outpu terminals.

To adjust the alarms, use an external adjustable DC power supply capable of providing up to 1/ of an amp and an infinitely variable range of 10 to 50 volts.

De-energize the charger, disconnect the battery and connect the power supply's output leads to the charger's FC output terminals, being careful to observe correct polarity. Turn on the power supply. Verify on the external meter that polarity is correct.

Low battery alarm: Adjust the power supply to the desired alarm level. Turn the alarm pot counter-clockwise one revolution or so to increase the alarm voltage point. Wait until the alarm activates (about one minute). Now slowly turn the adjustment pot clockwise until the alarm light shuts off. This will be the voltage at which the adjustable power supply is set.

Charge fail alarm: Set this alarm using the same procedure as the low battery voltage alarm.

High battery alarm: Adjust the power supply to the desired level. Turn the alarm pot counter-clockwise one turn or so to reduce the alarm voltage to a low value. Now slowly turn the adjustment pot clockwise until the alarm light turns on. This will be the voltage at which the adjustable supply is set.

5.4 Factory-Set Alarm Voltages

Chargers set for lead-acid battery

	12 volt	24 volt	32 volt
Low battery alarm voltage	11.0	22.0	30.0
High battery alarm voltage	16.0	32.0	40.5
Charge fail alarm voltage	12.5	25.0	34.0

Chargers set for nickel cadmium battery

	12 volt	24 volt	32 volt
(# cells), low battery alarm voltage	(10) 13.0	(19) 25.0 (20) 26.0	(25) 32.5 (27) 35.1
(# cells), high battery alarm voltage	(10) 16.5	(19) 31.0 (20) 32.6	(25) 40.8 (27) 44.0
(# cells), charge fail alarm voltage	(10) 13.7	(19) 26.0 (20) 27.0	(25) 34.5 (27) 37.0

6 Charger Trouble-shooting

6.1 SENS Repair Policy

SENS's policy is to help field technicians correct problems as fast and inexpensively as possible. Please do not hesitate to call SENS; toll-free number to obtain assistance in troubleshooting our chargers. Calling us will save you time and trouble.

6.2 Troubleshooting Table

This troubleshooting guide is provided for users experienced with power conversion equipment. If you are unsure how to proceed, or factory service assistance, contact SENS

Symptom	Possible Cause	Test	Repair Procedure
• No output	• AC breaker tripped • DC breaker tripped • No AC power • Defective transformer • Defective SCRs • Defective control circuit • Defective filter inductor • Defective rectifier diode(s)	Check breaker Check breaker Check voltage Test #1 Test #4 Test #5 Test #2 Test #3	Reset breaker Reset breaker Restore AC power Replace Replace Replace Replace Replace
• AC breaker only trips	• Defective SCR(s) • Defective rectifier diode(s) • Defective transformer	Test #4 Test #3 Test #1	Replace Replace Replace
• AC and DC breakers trip	• Defective SCR(s) • Defective rectifier diode(s)	Test #4 Test #3	Replace Replace
• Current higher than normal	• Shunt (R1) shorted • Defective control circuit	Test #6 Test #5	Replace Replace
• Improper regulation	• Defective SCR • Defective control circuit • Defective filter inductor	Test #4 Test #5 Test #2	Replace Replace Replace

6.3 Component Diagnostic Tests

Test #1: With transformer leads disconnected, energize the transformer with the normal AC supply voltage. Measure entire secondary voltage. It should be 1.5 to 2 times the nominal battery voltage.

Test #2: With one or both leads disconnected from the inductor, measure the resistance across the inductor terminals. If the resistance is less than 0.25 ohms, the inductor is OK.

Test #3: Disconnect wire connected to the diode. Using an ohmmeter on the RX1 scale, a good diode will cause the ohmmeter to read approximately 1/2 scale when the

leads are connected one way, and infinity when the leads are connected in reverse. A similar reading in both directions indicates a defective diode.

Test #4: Disconnect all the leads to the SCR and its heat sink. Connect a voltmeter across the 1KΩ resistor to measure the voltage drop. With the battery connected as shown, V_{drop} should read approximately 2.3 volts (V_{source} - 0.7 volts). Remove the voltage source to the gate, but keep it connected to the 1KΩ resistor and cathode. V_{drop} should equal zero. Reconnect the gate and reverse the battery polarity. V_{drop} should equal zero. Readings other than these indicate a defective SCR. See Figure 6.3

Test #5: Due to the modest cost of the control circuit, we recommend that the entire unit be replaced rather than attempting to repair it. If the troubleshooting guide has not revealed any defective components (tests #1-4), the control circuit should be replaced as a unit.

Test #6: Remove all wires from the current shunt. Place a milliohmmeter across the two terminals. The following formula should be used to determine the correct resistance:

Resistance = 0.5/Output current rating of the charger

If the resistance is more than 20% too low, the current shunt should be replaced.

FIGURE 6.3
SCR test setup

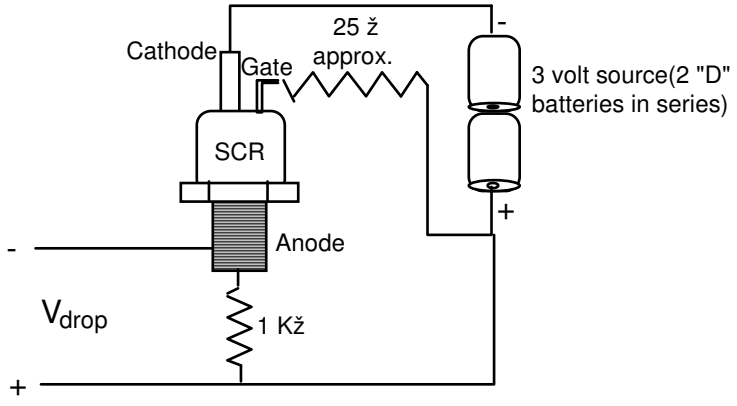

FC/FCA
12, 24, 32 & 48 VOLT, 6 & 10 AMP

BATTERY CHARGER
OPERATION & MAINTENANCE GUIDE

Dependable Power Solutions . . . It's All We Do!

100 Power Drive Mankato, MN 56001
Phone 507.625.7973 Fax 507.625.2968 Toll Free 800.325.5450 www.katolight.com
FC-FCA_6-10AMP_KL_Manual_3-02

IMPORTANT SAFETY INSTRUCTIONS

SAVE THESE INSTRUCTIONS

This manual contains important safety and operating instructions for Stored Energy Systems (SENS) model FC. Before using the battery charger, read all instructions and cautionary markings on the battery charger, battery and equipment connected to the battery system.

Pay special attention to these three types of notices used in this document.

WARNING: is used in this manual to warn of possible personal or property injury

CAUTION: *is used in this manual to warn of possible equipment damage*

NOTE: is used in this manual to provide advice on how to obtain maximum performance, reliability or life from components of your system.

WARNING: Please read these safety warnings and heed them. Failure to do so could result in either severe personal injury or equipment damage.

To reduce the risk of injury, charge only properly sized lead-acid or nickel cadmium batteries. Other types of batteries or under-sized batteries may burst causing personal injury and damage.

- Do not install or operate charger if it has been dropped or otherwise damaged. Return it to the factory for repair.
- Install the charger in accordance with all local codes.
- Do not expose charger to rain or snow.
- Do not disassemble charger; return to factory when service or repair is required. Incorrect assembly may result in a risk of electric shock or fire.
- To reduce risk of electric shock, de-energize and disconnect the AC input and the battery from the charger before attempting maintenance or cleaning.
- Use of an accessory not recommended or sold by SENS may result in a risk of fire, electric shock or personal injury.
- During normal operation, batteries may produce explosive hydrogen gas. *Never smoke, use an open flame, or create sparks near the battery or charger.*
- Remove jewelry, watches, rings, etc. before installing battery or charger.

Maintenance Instructions

User maintenance is limited to charger adjustment. All on-site servicing should be performed by qualified service personnel. If qualified personnel are not available, return the charger to the factory for repair, or contact the factory to arrange for field service.

1 READ THIS FIRST

CAUTION: Failure to follow installation instructions may cause equipment damage, or void the equipment warranty. READ THESE INSTRUCTIONS BEFORE PROCEEDING!

• The charger *must* be connected to a battery for it to operate properly (see Section 4.1). If the charger is feeding a load and charging a battery, disconnecting the battery will cause the output voltage to rise to unsafe levels with possible damage to connected loads. *Always disconnect the AC mains power before disconnecting the battery from the charger.* If the charger is not connected to a battery it will operate at approximately half its rated voltage, and the alarm relays (if the unit is so equipped) will chatter.

• Do not connect the battery leads to the charger backwards. Doing so will blow the output fuse when the charger is energized

• Changing factory-set potentiometers *voids the warranty.* Contact the factory if the settings on your charger are incorrect.

If you suspect a problem, check the following:

1. Is AC power available to the charger?
2. Are any fuses blown?
3. Is the charger connected to a battery of the correct voltage?
4. Was the charger damaged in transit or installation?
5. If you determine that the charger is not working because it is not putting out any current, check the battery's state of charge. If the battery is fully charged it is normal for the charger to produce zero current. See Figure 4.1.
6. If the battery is being over- or undercharged, check whether the output voltage settings have been tampered with. The pots should be covered with either white adhesive paper dots or a hard red varnish.

2 Description and Application

This manual covers installation, operation and troubleshooting of SENS model FC and FCA battery chargers rated at 6 or 10 amps output, 12, 24, 32 and 48 volts. Text, drawing of the housing mechanical layout, generic power circuit schematic, and circuit board replacement information are included. Complete parts lists and board-level documentation are available separately from SENS.

NOTE: The following units are UL listed to UL specification 1012:

- 12 or 24 volt output AND
- 120 volt input

3 Installation

3.1 Mounting *(for dimensions, refer to drawings at end of manual)*

Mount on a clean, dry, fixed wall that is protected from extremes of temperature. Allow at least 6 inches above and below the unit, and 3 inches on either side for proper ventilation. The unit must be mounted vertically.

If the charger must be mounted on or in a vibrating enclosure, the mounting arrangement should be designed to provide full vibration isolation. ***Protect the charger from construction grit, metal chips, paint or other debris.*** Clean away debris after installation.

FIGURE 3.1

FC Charger Mounting *(see diagram at end of document for dimensions)*

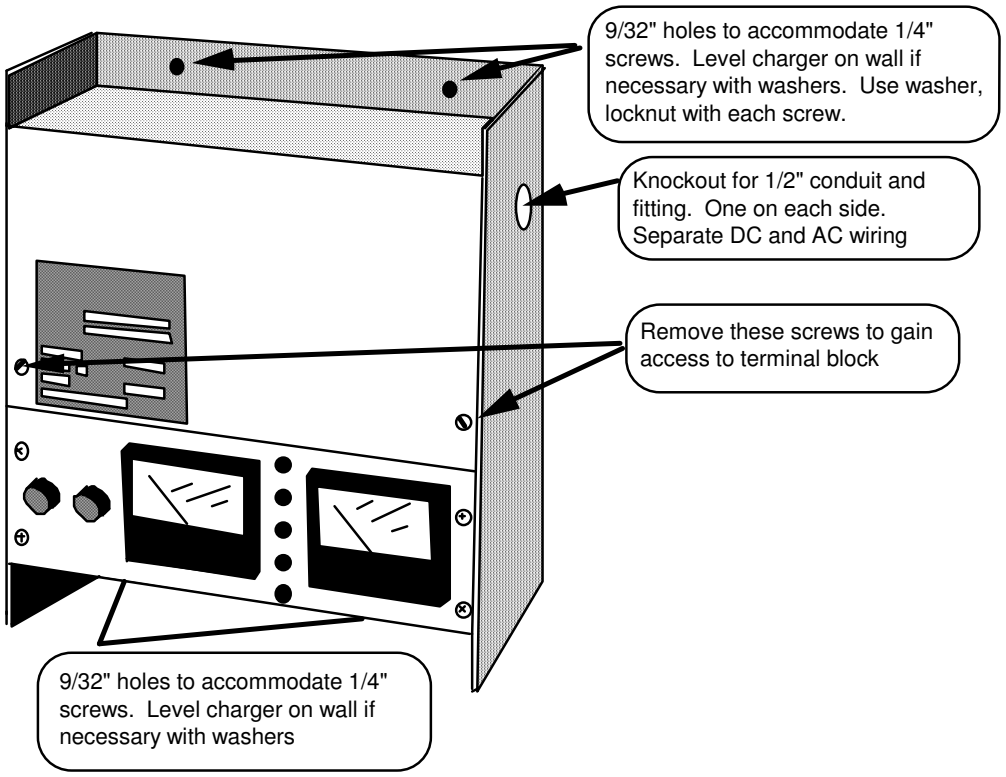

3.2 Power Connections

WARNING: FC/FCA chargers use different fusing configurations as follows:

115 & 277 volt, 60 Hz	Single pole input fuse
220 volt, 60 Hz*	2-pole input fuses (to protect two live leads - there is no neutral lead used)
220 volt, 50 Hz**	Single pole input fuse

Ensure that you have the correct fusing configuration.

1. *The neutral must NEVER be fused*
2. *The live conductors must be fused*

* All 60 Hz voltages except 115 and 277 use this configuration
** All 50 Hz voltages use this configuration unless specially ordered

Refer to the drawings at the back of this guide. Connection should be made by a qualified installer. Remove the two screws securing the charger's top front panel to gain access to the connections.

- Use AWG #12 or larger wire for DC (charger to battery) leads.
- Use AWG #14 or larger wire for AC input and ground connections

WARNING: The battery charger should be connected to a grounded permanent wiring system. A ground stud is provided for this purpose

Knockouts accommodating 1/2" conduit and fittings are located on each side of the charger. Run the AC wiring independent of the DC and alarm wiring.

The voltmeter will show battery voltage as soon as the DC connection is completed. *Check the voltmeter as soon as the FC connection has been made.* If the meter reads zero or is deflecting below zero, reverse the polarity of the battery connections. *Do not energize the charger with the battery connected backwards*--the DC fuse will blow.

3.3 Alarm Connections *(pertains only to FCA models)*

Caution: Connection to the alarms is somewhat delicate; complete instructions and detailed drawings are provided at the end of this guide. Use stranded wire, rather than solid, if it is available.

The alarm relays are rated for a maximum of 2 amps at 25 volts DC, or 0.5 amp at 120 volts AC (non-inductive loads only). Connect the alarm relay to customer-supplied supervisory system only -- *do not apply AC mains power to the relays and* do not exceed the relays' ratings.

Two versions of FCA alarm board are available; both meet NFPA 110:

Condition	LED Indicator	FCA model suffix
AC on	Green LED	-2211, -2411
Low battery voltage	Amber LED	-2211, -2411
Charger failure	Red LED	-2211, -2411
AC fail	Red LED	-2411 only
High battery voltage	Red LED	-2411 only

4 Using the Charger

4.1 Features of the Charger

FC/FCA chargers feature **soft start circuitry** which causes a gradual increase in output power after application of AC power. The **Autoboost system** causes the charger initially to operate at the high rate. When the charger reaches the boost voltage set point, and current has dropped to approximately 50% to 70% of the charger's rating, the charger will revert to the float mode. The transition from boost to float will cause the output current of the charger to drop to zero amps until the battery voltage drops to the float level. Once the battery voltage nears the float setting, the charger will again deliver a small amount of current to the battery to maintain it at its fully charged state. Figure 3 is a graph of how the Autoboost system works.

NOTE: Autoboost is disabled on chargers shipped for use with sealed lead-acid batteries, per the recommendation of most battery manufacturers.

The battery charger is **temperature compensated** to match the negative temperature coefficient of the battery. Thus the float voltage will increase slightly as the temperature decreases, and decrease as temperature increases. The battery charger is electronically **current limited** to 110% of rated output. The charger will reduce its current output when the battery voltage is lower than normal so that the charger's rated output power in watts is not exceeded. The charger uses **True Voltage Sensing** (TVS) to automatically compensate for voltage drop in the charging leads. TVS senses current flow between output current pulses, when current flow and voltage drop are zero. TVS interacts with the battery and therefore a battery is required for correct operation of the charger.

FIGURE 4.1

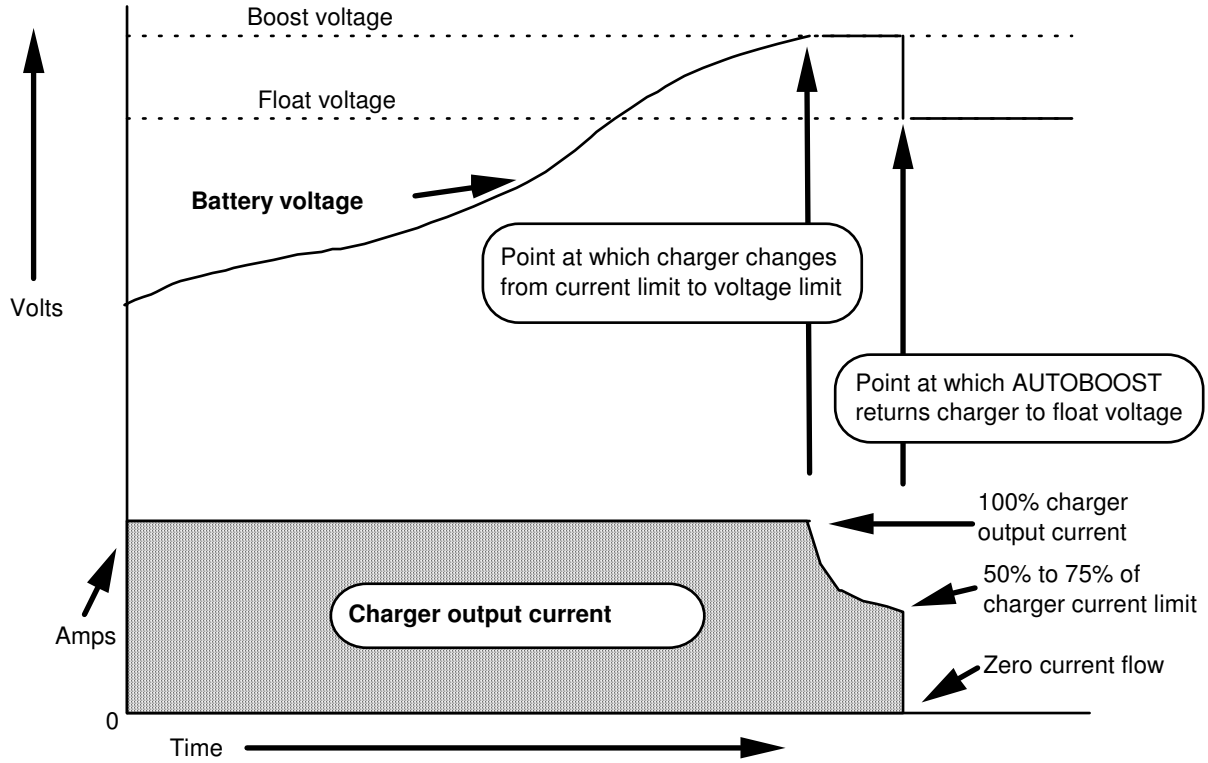

NOTE: When the charger switches from BOOST to FLOAT mode, no current will flow into the battery for a while due to the battery's high state of charge. **This is completely normal, and indicates that the charger is working properly.**

4.2 Ammeter, Voltmeter and Charger Troubleshoting

The voltmeter and ammeter (and alarm LEDs on the FCA models) provide indication of normal operation. Correct operation is indicated when the voltmeter reads 110% to 120% of nominal battery voltage. High current flow indicates that the battery has been discharged, and is being recharged. Lo current flow normally indicates that the battery is fully charged. The charger will at times read 0 amp This most commonly happens after the charger has reverted from the boost (or high rate) charge to flo charge. *Do not* automatically assume that the charger has failed if the ammeter reads 0 amps!

4.3 Alarm Operation *(pertains only to FCA models)*

The alarm LEDs have the following meanings:

Power on: AC power is available to the charger

Charge fail: The charger senses voltage rather than current to detect "failure"; once battery voltage drops approximately 1 volt below nominal the alarm activates. This may occur when:
a) The battery is fully discharged
b) The AC power has failed, and the battery has become discharged
c) There is an excessive load on the charger (not a charger failure)
d) The charger has failed

There is a time delay of approximately one minute between the start of the alarm condition and the actual alarm signal. This prevents spurious indications during short-term deep battery discharge (as would happen during engine cranking).

AC fail There is no AC power to the charger. This indicates either:
a) The AC power has failed
b) The input fuse is blown

High battery: Indicates that the output voltage is above a preset, adjustable point. The control circuit may have malfunctioned, or it could be misadjusted. In some cases, long leads of small gauge wire to the batteries cause a high battery alarm. The charger's *True Voltage Sensing* circuit automatically compensates for voltage drop in the charging leads. If charging leads are too small, the charger will operate at a high voltage to overcome high resistance in the leads. The alarm indication is made as soon as the alarm condition begins and lasts for approximately one minute after the alarm condition ends.

Low battery: Indication is made when the battery voltage is below a preset, adjustable point. This may occur when:
a) The AC power has failed and the battery has become discharged
b) The charger has malfunctioned
c) The battery is defective

There is a delay of approximately one minute between the start of the alarm condition and the alarm signal. This prevents false indications due to engine cranking or other temporary deep battery discharge. The delay period can be adjusted. Consult the factory.

The FCA's alarm system includes Form C contacts. The contacts change position whenever the associated alarm is activated.

When de-energized, the Form C contacts are in the “Failed” position (Fail and Com are connected)

5 Adjustments

Customer service of the charger is recommended only if the technician is experienced in electrical and electronic equipment. If a trained technician is not available, return the charger to the factory for adjustment. Note that adjustment of factory-set voltages without factory authorization voids the charger’s warranty.

5.1 Adjusting the Charger Output Voltage *(refer to Figure 5)*

NOTE: There are two ways to adjust the charger voltage. The first method requires only an external precision voltmeter. The second method takes less time, but requires a 40 volt, 100,000 microfarad capacitor and an adjustable load.

NOTE: The charger *cannot* be correctly adjusted without either a battery or the capacitor mentioned above. This is because SENS' True Voltage Sensing circuit senses battery voltage only between charging current pulses.

All chargers *(adjustment procedure where capacitor and & load bank are **not** available)*

Connect an external precision voltmeter to the battery. Adjust the charger in small increments -- it takes time for the battery to adjust to new charger settings, so be patient.

1. Open upper front panel to gain access to control circuit.
2. Remove protective paper dots from potentiometers R30 and R34 (also labeled FLOAT and BOOST).
3. Turn boost voltage pot R34 fully counter-clockwise.
4. Adjust float pot R30 in small increments until the battery reaches the desired voltage. The voltage is not stable until the current drops to about 1 to 2 amps. *Do not consider the adjustment final until charger current is this low!*
5. Turn the boost pot R34 fully clockwise (maximum output voltage).
   Now adjust the boost charge voltage as described below:

Different adjustment procedures are used for AUTOBOOST and timed boost chargers.

AUTOBOOST chargers only *(not equipped with a timer)*

6. Put the charger in the AUTOBOOST mode by partially discharging the battery, then removing and restoring the charger's AC power source.
7. Allow the battery voltage to rise to the desired high rate charge level. Once at this voltage, carefully turn the boost pot counter-clockwise until the charger ammeter suddenly drops to approximately zero amps.
8. Charger is now adjusted. Replace paper dots and close front cover.

Chargers with timed boost

6. Turn timer knob to start high rate charging.
7. Allow the battery voltage to rise to the desired high rate charge level. The battery should be discharged so that charger is producing between 60% and 100% of its rated current. Once at the desired boost voltage, carefully turn the boost pot counter-clockwise until the charger ammeter drops noticeably (to between 1/2 and 2 amps).
8. Charger is now adjusted. Replace paper dots and close front cover.

Alternative adjustment procedure using capacitor and load bank -- all chargers

The capacitor and adjustable load take the place of a battery, so you do not have to wait for the battery voltage to increase or decrease to new output voltage levels. The time delays in the alarm circuit, however, cannot be defeated.

Connect the capacitor in parallel with the output terminals, making sure that the polarity is correct. Use the same general adjustment procedure as the "all chargers" section above; setting changes, however, do not have to be made in small increments. For the float adjustment, adjust the load bank so that the charger puts out about one amp. For the boost adjustment, adjust the load bank so that the charger puts out about 80% of its rated current. This high load causes AUTOBOOST chargers to switch to high rate charge.

FIGURE 5

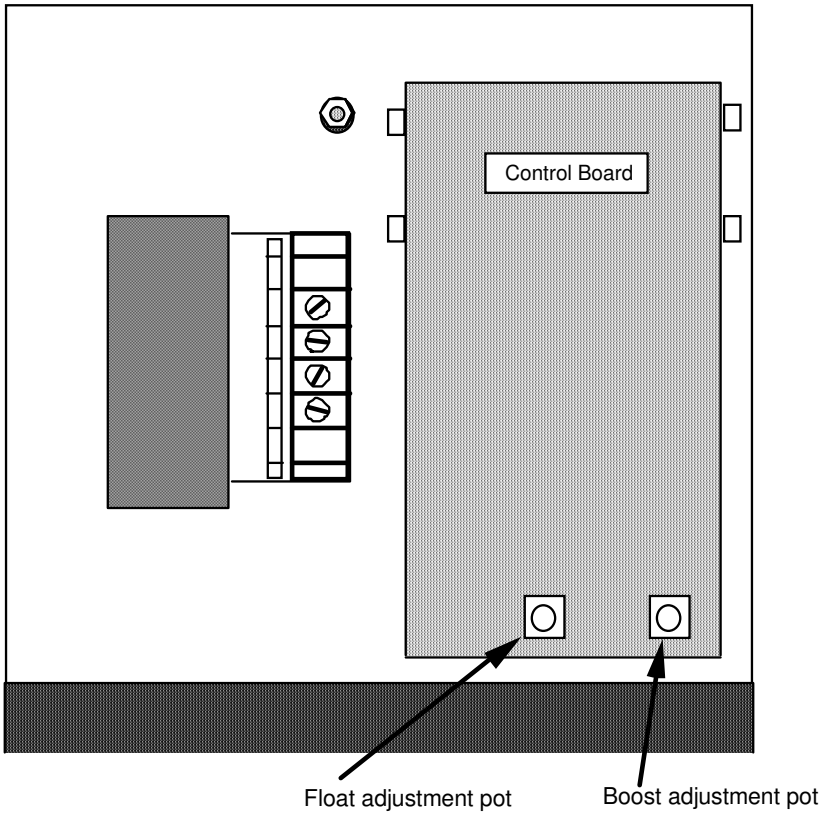

View of FC charger with upper and lower doors open

5.2 Factory-Set Output Voltages

Chargers set for liquid-electrolyte lead-acid battery

	12 volt	24 volt	32 volt	48 volt
Float voltage	13.3	26.6	35.5	53.28
Boost voltage	14.0	28.0	37.3	56.00

Chargers set for sealed lead-acid battery

	12 volt	24 volt	32 volt	48 volt
Float voltage	13.5	27.0	36.0	54.24
Boost voltage	Boost should be turned all the way off for sealed battery			

Chargers set for nickel cadmium battery

	12 volt	24 volt	32 volt	48 volt
Float (# cells), voltage	(10) 14.3	(19) 27.2 (20) 28.6	(25) 35.8 (27) 38.6	(37) 52.91 (38) 54.34
Boost (# cells), voltage	(10) 15.2	(19) 28.6 (20) 30.0	(25) 37.5 (27) 40.5	(37) 56.24 (38) 57.76

5.3 Adjusting Alarm Voltage Levels

Three alarm adjustments are possible: charger failure alarm, low battery voltage alarm and high battery voltage alarm. The location of the adjustment potentiometers is shown in drawing no DIA\00066 at the end of this guide. Use an external precision voltmeter connected directly to the charger's output terminals.

To adjust the alarms, use an external adjustable DC power supply capable of providing up to 1/2 of an amp and an infinitely variable range of 10 to 50 volts.

De-energize the charger, disconnect the battery and connect the power supply's output leads to the charger's FC output terminals, being careful to observe correct polarity. Turn on the power supply. Verify on the external meter that polarity is correct.

Low battery alarm: Adjust the power supply to the desired alarm level. Turn the alarm pot counter-clockwise one revolution or so to increase the alarm voltage point. Wait until the alarm activates (about one minute). Now slowly turn the adjustment pot clockwise until the alarm light shuts off. This will be the voltage at which the adjustable power supply is set.

Charge fail alarm: Set this alarm using the same procedure as the low battery voltage alarm.

High battery alarm: Adjust the power supply to the desired level. Turn the alarm pot counter-clockwise one turn or so to reduce the alarm voltage to a low value. Now slowly turn the adjustment pot clockwise until the alarm light turns on. This will be the voltage at which the adjustable supply is set.

5.4 Factory-Set Alarm Voltages

Chargers set for lead-acid battery

	12 volt	24 volt	32 volt	48 volt
Low battery alarm voltage	11.0	22.0	29.3	44.0
High battery alarm voltage	16.5	33.0	44.0	60.0
Charge fail alarm voltage	12.5	25.0	34.0	50.0

Chargers set for nickel cadmium battery

	12 volt	24 volt	32 volt	48 volt
(# cells), low battery alarm voltage	(10) 11.9	(19) 22.61 (20) 23.8	25) 29.75 (27) 32.13	(37) 44.03 (38) 45.22
(# cells), high battery alarm voltage	(10) 16.5	(19) 33.0 (20) 36.0	(25) 40.8 (27) 44.0	(37) 50.7 (38) 52.1
(# cells), charge fail alarm voltage	(10) 13.5	(19) 26.0 (20) 27.0	(25) 34.5 (27) 37.0	(37) 60.3 (38) 61.9

6 Trouble-shooting Guide *(FC or FCA chargers)*

6.1 SENS' Field Assistance Policy

SENS' policy is to help field technicians correct problems as fast and inexpensively as possible. We encourage you to telephone SENS on our toll-free line for help--it will save you time and trouble.

6.2 Troubleshooting Table

Symptom	Possible cause	Test	Repair procedure
No output	AC or DC fuse blown	#1	Replace fuse
	Battery not connected		Connect battery
	No AC power		Restore AC
	Ammeter disconnected		Reconnect
	TB-3 disconnected		Reconnect
	Defective control circuit		Call SENS for assistance
	Defective transformer	#2	Call SENS for assistance
AC fuse blows	Wrong input voltage	#3	Connect to correct voltage
	Defective control circuit		Call SENS for assistance
DC fuse blows	Defective control circuit		Call SENS for assistance
	Battery leads reversed		Call SENS for assistance
Overcharging	Improper boost/float settings	#4	Adjust output voltages
	Defective control circuit		Call SENS for assistance
Undercharging	Improper boost/float settings	#4	Adjust output voltages
	Defective control circuit		Call SENS for assistance

Alarm Indications (FCA units only)

Indication	Possible cause	Test	Repair procedure
AC fail	AC fuse blown	**#1**	Replace AC fuse
	No AC power		Restore AC
	Defective alarm circuit		Call SENS for assistance
Charge fail	AC or DC fuse blown	#1	Replace fuse
	No AC power		Restore AC
	Excessive load	#5	Reduce load
	Battery voltage low		Dead battery
	Defective alarm circuit		Call SENS for assistance
High DC	Improper voltage settings	#4	Adjust output/alarm voltages
	Defective control circuit		Call SENS for assistance
	Defective alarm circuit		Call SENS for assistance
Low DC	AC fuse blown	#1	Replace AC fuse
	DC fuse blown	#1	Replace DC fuse
	No AC power		Restore AC
	Excessive load	#5	Reduce load
	Defective alarm circuit		Call SENS for assistance

FIGURE 6

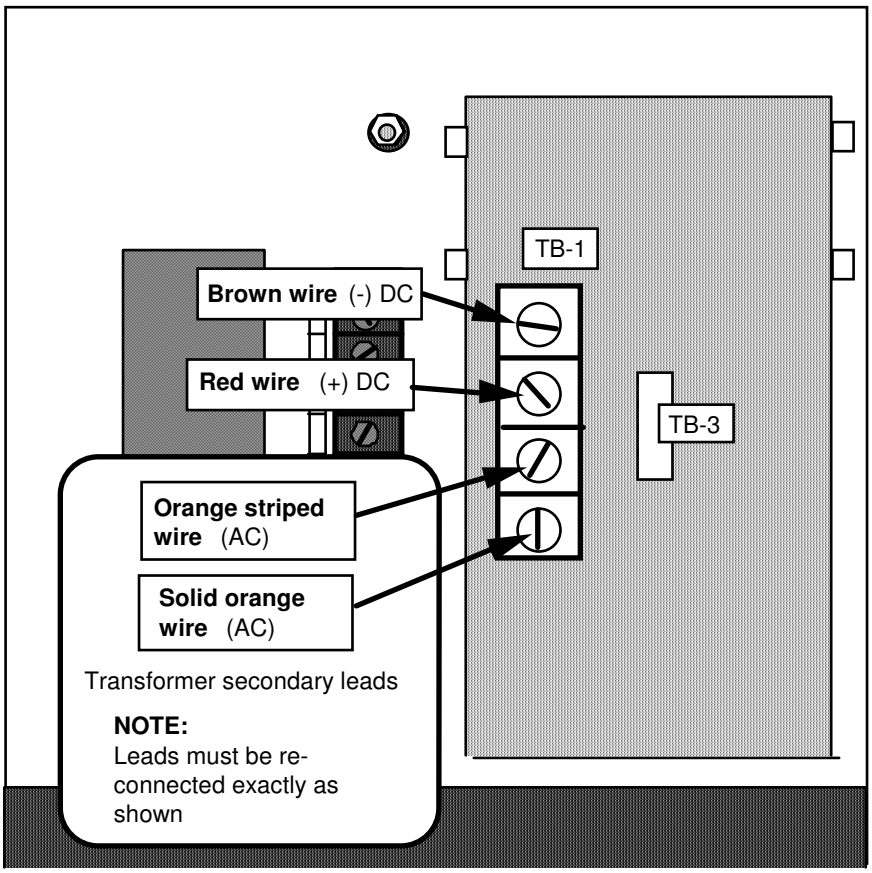

7
Test Procedures

***Test #1*:** Remove the fuse and measure its resistance using an ohmmeter on the Rx1 range. Meter should read 0 ohms for a good fuse.

***Test #2*:** Energize the charger after disconnecting the secondary leads from the control board and measure the secondary voltage. Do not short circuit the leads while performing this test. The AC voltage should be 1.5 to 2 times the nominal output voltage of the charger. The control winding (TB-3) should be approximately 10-14 volts AC rms. See Figure 6 for location of leads.

Test #3: Check the information on the nameplate to ensure it agrees with the AC voltage applied.

***Test #4*:** Measure the battery voltage using a 1% accuracy voltmeter. If the charger's voltage is not set properly for your batteries, adjust float/boost settings according to the adjustment procedure.

Test #5: Loads greater than the charger's rating will cause the control circuit to reduce output voltage so that the total output power in does not exceed the charger's rating. This is normal with a dead or deeply discharged battery.

MODEL 79100
6 AMP ON BOARD BATTERY CHARGER
OWNER'S MANUAL

Connections at a glance:

The model 79100 is designed to be used as an on board charger for lead acid batteries (flooded cell or AGM types) and gel cell batteries. We recommend that you set up the charger near the battery you wish to charge, and make connections in the following order:

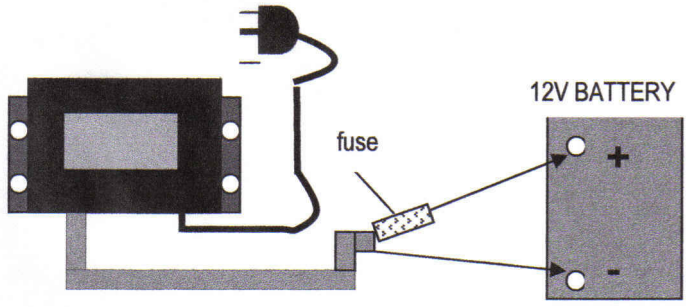

1. Charger POS (Red wire with fuse) to battery " + ".
2. Charger NEG (black wire) to battery " – ".
3. Plug AC line cord into a GFCI protected wall socket.
4. Remove connections in the reverse order.

SAVE THESE INSTRUCTIONS

1. INTRODUCING THE CHARGER

The model 79100 is designed to both recharge your battery, and extend your battery's life in applications where it is stored for long periods of time. The model 79100 is a "2-stage" electronic battery charger. Rainproof, lightweight, silent, and completely automatic, it produces 12 Volts DC at a full 6 Amps, while using much less AC current than older chargers. Unlike automotive "trickle" chargers, the model 79100 will not boil off the electrolyte in a lead-acid battery when left unattended. When the model 79100 is attached to your battery and plugged into a standard 115 Volt / 60 Hz AC outlet, the red and green LED's let you know the unit is recharging and maintaining your battery. This sophisticated device is ideal for recharging and maintaining the 12VDC battery in your boat, electric vehicle or cart, ATV, snowmobile or motorcycle.

2. IMPORTANT SAFETY INSTRUCTIONS

This manual contains important safety and operating instructions for the charger. Read the entire manual before using. Also read all instructions and cautions for and on the charger, batteries and equipment in the vicinity of the batteries.

WARNINGS
THIS CHARGER SHOULD BE USED TO CHARGE ONLY 12VOLT DC LEAD ACID OR GEL CELL TYPE BATTERY SYSTEMS. USE ON OTHER THAN A 12 VDC SYSTEM CAN CAUSE THE BATTERY TO EXPLODE AND CAUSE PERSONAL INJURY.

RISK OF EXPLOSIVE GASES! WORKING IN THE VICINITY OF A LEAD ACID BATTERY IS DANGEROUS. A BATTERY GENERATES EXPLOSIVE GASES DURING NORMAL OPERATION. THEREFORE IT IS OF UTMOST IMPORTANCE THAT EACH TIME BEFORE USING YOUR CHARGER YOU FOLLOW THE INSTRUCTIONS EXACTLY.

Personal Safety Precautions

Adhere to the following personal safety precautions when installing or working with the chargers:

1. Someone should be within voice range or close enough to come to your aid when you work near a lead-acid battery.
2. Have plenty of fresh water and soap nearby in case battery acid contacts skin, clothing, or eyes.
3. Wear complete eye protection and clothing protection. Avoid touching eyes while working near a battery.

4. If battery acid contacts skin or clothing, wash them immediately with soap and water. If acid enters the eye, flood the eye with cold, running water for at least ten minutes and get medical attention.
5. Never smoke or allow an open flame in the vicinity of the battery.
6. Do not drop a metal tool onto the battery. It may spark, short circuit the battery and may cause an explosion.
7. Remove all personal metal items such as rings, bracelets, necklaces, and watches when working near a lead-acid battery. A battery can produce short circuit currents high enough to weld a ring or the like to metal, causing a severe burn.

Preparing to Charge Precautions

Before charging a battery with the charger, read the following precautions:

1. Do NOT operate the charger if the input or output cables or an LED is damaged.
2. Make sure all accessories on the product you are charging are OFF.
3. If the battery or batteries must be removed from the product, always remove the grounded terminal from the battery first.
4. Be sure the area around the battery is well ventilated while the battery is being charged. Gas can be forcefully blown away using a piece of cardboard or other non-metallic material as a “hand fan”.
5. Clean battery terminals. Be careful to keep corrosion from coming in contact with eyes.
6. Add distilled water in each cell until battery acid reaches levels specified by the battery manufacturer. Do not overfill. For a battery without cell caps, carefully follow the manufacturer’s recharging instructions.
7. Never allow the ring terminals to touch each other.
8. NEVER charge a frozen battery.

Grounding Precautions

DANGER

Do not operate this charger with a two bladed adapter plug or extension cord. Doing so can result in serious personal injury.

CAUTION: To reduce the risk of shock, connect only to a properly grounded outlet.

3. INSTALLING THE CHARGER

Choosing Charging Location
The charger should have at least eight inches of unobstructed area on all sides of the unit for effective cooling. The case of this charger will become warm during operation. Do not install the charger on carpeted, upholstered, or varnished surfaces. Keep the AC power cord connection as short as possible especially when using an extension cord.

Mounting the Charger
1. Use corrosion resistant ¼" dia. bolts, backed by a flat washer, and secured to the mounting surface with a split-ring lock washer.
2. Hold the charger to the mounting surface and mark the holes.
3. Remove the charger and drill the mounting holes.
4. Align the charger and assemble the mounting hardware. Secure.

Making DC Connections
1. Check polarity of the battery posts. The POSITIVE (POS., P, +) battery post usually has a larger diameter than the NEGATIVE (NEG., N, -) post.
2. Attach the red POSITIVE ring terminal (identified by the red POSITIVE label on the red or white output wire) from the charger to the POSITIVE post of the battery. Attach the black NEGATIVE ring terminal (black output wire) from the charger to the NEGATIVE post of the battery.
3. When disconnecting the battery charger, first disconnect the AC power cord, then remove the black (NEGATIVE) ring terminal from the battery terminal and then remove the red (POSITIVE) ring terminal from battery terminal.

Making AC Power Connections
After securing the battery connections, plug the AC line cord into an available AC outlet that is protected by a Ground Fault Circuit Interrupter (GFCI) breaker. Keep the AC power cord connection as short as possible especially when using an extension cord.

4. OPERATING THE CHARGER

The **LED Function Chart** below describes the charging process.

Display	Operating Condition
Red Green	When the red LED is on, it indicates that your battery is discharged and the model 79100 is recharging at the "BULK". This charging rate is approximately 5 to 6 Amps. While the red LED is on, the voltage measured (with the charger on) will be 12.0 to 12.5 Volts. If the red LED stays on for more than 24 hours, refer to Problem 1 in the troubleshooting section in this manual.
Red Green	When both the green and the red LED's are on, the model 79100 is charging at a midrange rate of between 2 and 5 Amps. This mode of charging gradually "tops off" your battery, and reduces harmful sulfating. While both LED's are on, the voltage measured (with the charger on) should be approximately 12.5 to 13.0VDC. If both LED's stay on longer than 24 hours, refer to Problem 2 in the troubleshooting section in this manual.
Red Green	When the green LED is on, the model 79100 is charging at a "FLOAT" or "MAINTENANCE" rate of less than 2 Amps. Your battery is now 90% charged and ready for use. This "float" charging current will gradually decrease to as low as 0.1 Amps as the battery reaches 100% charge. It will now be kept at full charge without over-charging. If the green LED stays on when your battery is known to be low, refer to Problem 3 in the troubleshooting section in this manual.

Model 79100 Charging Method

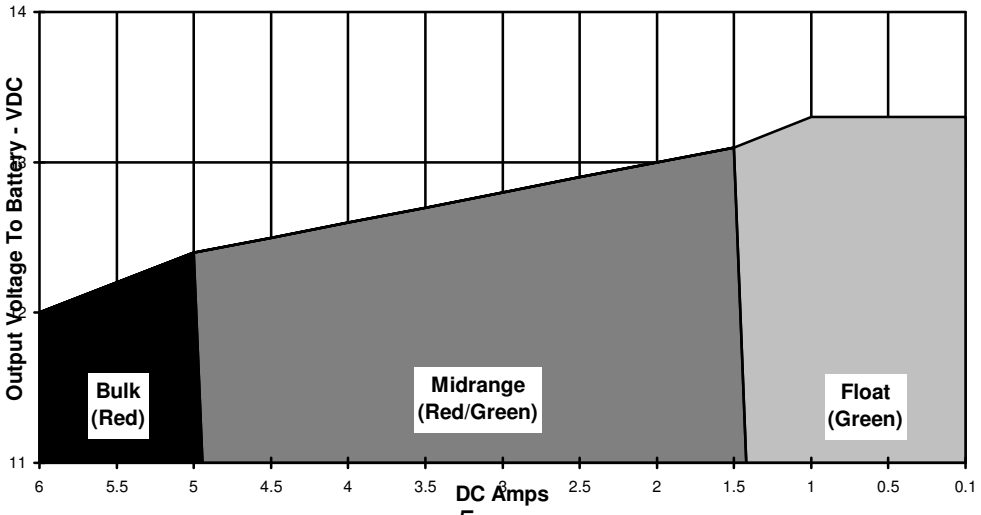

5. TROUBLESHOOTING

Problem	Cause	Solution
1. Red LED stays on for more than 24 Hrs.	1. One or more defective or damaged cells. 2. Charger has reduced its output voltage below the normal level due to a DC overload or a DC short. 3. On-board DC systems are drawing more current than the charger can replace.	1. Load test the battery and replace if necessary. 2. Remove the source of the overload or short. Disconnect the charger's black (NEGATIVE) ring terminal from the battery. Reapply AC power and the green LED only should now light. 3. Turn off all DC equipment while charging.
2. The red and green LED's stay on for more than 24 Hrs.	1. On-board DC systems are drawing between 2 – 5A. 2. One or more defective or damaged cells. 3. Extremely low AC voltage at the battery charger	1. Turn off all DC equipment while charging. 2. Load test the battery and replace if necessary. 3. Apply a higher AC voltage source or reduce the length of the extension cord.
3. Green LED stays on when the battery is known to be low.	1. Open DC output fuse. 2. Faulty or contaminated terminal connections. 3. One or more defective or damaged cells.	1. Replace DC output fuse with a Bussmann (AGX-10). 2. Clean and tighten or repair all terminal connections. 3. Load test the battery and replace if necessary.
4. Neither of the LED's turn on when the AC power is applied.	1. No AC power available at the charger 2. Component failure	1. Connect AC power or reset the AC breaker on the main panel

6. MAINTAINING THE CHARGER

Periodically clean both battery terminals with baking soda and tighten all connections. No other maintenance on the charger is required.

7. SPECIFICATIONS

Output:	
Charging:	12 Volts DC (min.) at 6 Amps
Maintaining:	13.30 Volts DC at 0.1 Amps
Input:	
Rated AC Voltage	100 – 130 VAC, 50/60 Hz
Current Draw	1.6 Amps at full output
Maximum recommended battery size:	
For recharging:	Up to 150 Amp-Hours
Maintenance only:	Up to 300 Amp-Hours
Physical Dimensions:	
Height:	3.5 in. (8.9 cm.)
Width:	6.4 in. (16.3 cm.)
Depth:	2.1 in. (5.3 cm.)
Weight:	3.5 lb. (1.6 kg)

FCC Class A EMC Notice

This equipment has been tested and found to comply with the limits for a Class A digital device, pursuant to part 15 of the FCC Rules. These limits are designed to provide reasonable protection against harmful interference when the equipment is operated in a commercial environment. This equipment generates, uses, and can radiate radio frequency energy and, if not installed and used in accordance with the instructions, may cause harmful interference to radio communications. Operation of this equipment in a residential area is likely to case harmful interference in which case the user will be required to correct the interference at his own expense.

If this equipment does cause harmful interference to radio or television reception, which can be determined by turning this equipment off and on, the user is encouraged to try to correct the interference by one or more of the following measures:

- Reorient or relocate the receiving antenna.
- Increase the separation between the equipment and receiver.
- Connect the equipment into an outlet on a circuit different from that to which the receiver is connected.

728943 Rev. 2

Katolight Part #77198 MODEL 2605A

5 AMP ON BOARD BATTERY CHARGER
OWNER'S MANUAL

Connections at a glance:

The Model 77198 is designed to be used as an on board charger for lead acid batteries (flooded cell or AGM types) and gel cell batteries. We recommend that you set up the charger near the battery you wish to charge, and make connections in the following order:

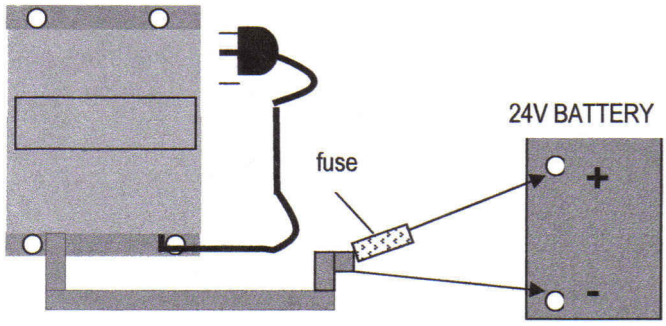

1. Charger POS (red wire with fuse) to battery " + ".
2. Charger NEG (black wire) to battery " – ".
3. Plug AC line cord into a GFCI protected wall socket.
4. Remove connections in the reverse order.

SAVE THESE INSTRUCTIONS

1. INTRODUCING THE CHARGER

The Model 77198 is designed to both recharge your battery, and extend your battery's life in applications where it is stored for long periods of time. The Model 77198 is a "3-stage" electronic battery charger. Rainproof, lightweight, silent, and completely automatic, it produces 24 Volts DC at a full 5 Amps, while using much less AC current than older chargers. Unlike automotive "trickle" chargers, the Model 77198 will not boil off the electrolyte in a lead-acid battery when left unattended. When the Model 77198 is attached to your battery and plugged into a standard 115 Volt / 60 Hz AC outlet, the red and green LED's let you know the unit is *recharging* and *maintaining* your battery. This sophisticated device is ideal for recharging and maintaining the 24VDC battery in your boat, electric vehicle or cart, ATV, snowmobile or motorcycle.

2. IMPORTANT SAFETY INSTRUCTIONS

This manual contains important safety and operating instructions for the charger. Read the entire manual before using. Also read all instructions and cautions for and on the charger, batteries and equipment in the vicinity of the batteries.

WARNINGS

THIS CHARGER SHOULD BE USED TO CHARGE ONLY 24VOLT DC LEAD ACID OR GEL CELL TYPE BATTERY SYSTEMS. USE ON OTHER THAN A 24 VDC SYSTEM CAN CAUSE THE BATTERY TO EXPLODE AND CAUSE PERSONAL INJURY.

RISK OF EXPLOSIVE GASES! WORKING IN THE VICINITY OF A LEAD ACID BATTERY IS DANGEROUS. A BATTERY GENERATES EXPLOSIVE GASES DURING NORMAL OPERATION. THEREFORE IT IS OF UTMOST IMPORTANCE THAT EACH TIME BEFORE USING YOUR CHARGER YOU FOLLOW THE INSTRUCTIONS EXACTLY.

Personal Safety Precautions

Adhere to the following personal safety precautions when installing or working with the chargers:

1. Someone should be within voice range or close enough to come to your aid when you work near a lead-acid battery.
2. Have plenty of fresh water and soap nearby in case battery acid contacts skin, clothing, or eyes.
3. Wear complete eye protection and clothing protection. Avoid touching eyes while working near a battery.
4. If battery acid contacts skin or clothing, wash them immediately with soap and water. If acid enters the eye, flood the eye with cold, running water for at least ten minutes and get medical attention.
5. Never smoke or allow an open flame in the vicinity of the battery.
6. Do not drop a metal tool onto the battery. It may spark, short circuit the battery and may cause an explosion.
7. Remove all personal metal items such as rings, bracelets, necklaces, and watches when working near a lead-acid battery. A battery can produce short circuit currents high enough to weld a ring or the like to metal, causing a severe burn.

Preparing to Charge Precautions

Before charging a battery with the charger, read the following precautions:

1. Do **NOT** operate the charger if the input or output cables or an LED is damaged.
2. Make sure all accessories on the product you are charging are **OFF**.
3. If the battery or batteries must be removed from the product, always remove the grounded terminal from the battery first.
4. Be sure the area around the battery is well ventilated while the battery is being charged. Gas can be forcefully blown away using a piece of cardboard or other non-metallic material as a “hand fan”.
5. Clean battery terminals. Be careful to keep corrosion from coming in contact with eyes.
6. Add distilled water in each cell until battery acid reaches levels specified by the battery manufacturer. Do not overfill. For a battery without cell caps, carefully follow the manufacturer’s recharging instructions.
7. Never allow the ring terminals to touch each other.
8. **NEVER** charge a frozen battery.

Grounding Precautions

DANGER

Do not operate this charger with a two bladed adapter plug or extension cord. Doing so can result in serious personal injury.

CAUTION: To reduce the risk of shock, connect only to a properly grounded outlet.

3. INSTALLING THE CHARGER

Choosing Charging Location

The charger should have at least eight inches of unobstructed area on all sides of the unit for effective cooling. The case of this charger will become warm during operation. Do not install the charger on carpeted, upholstered, or varnished surfaces. Keep the AC power cord connection as short as possible especially when using an extension cord.

Mounting the Charger

1. Use corrosion resistant ¼" dia. bolts, backed by a flat washer, and secured to the mounting surface with a split-ring lock washer.
2. Hold the charger to the mounting surface and mark the holes.
3. Remove the charger and drill the mounting holes.
4. Align the charger and assemble the mounting hardware. Secure.

Making DC Connections

1. Check polarity of the battery posts. The POSITIVE (POS., P, +) battery post usually has a larger diameter than the NEGATIVE (NEG., N, -) post.
2. Attach the red POSITIVE output wire from the charger to the POSITIVE post of the battery. Attach the black NEGATIVE output wire from the charger to the NEGATIVE post of the battery.
3. When disconnecting the battery charger, first disconnect the AC power cord, then remove the black NEGATIVE wire from the battery terminal and then remove the red POSITIVE wire from battery terminal.

Making AC Power Connections

After securing the battery connections, plug the AC line cord into an available AC outlet that is protected by a Ground Fault Circuit Interrupter (GFCI) breaker. Keep the AC power cord connection as short as possible especially when using an extension cord.

4. OPERATING THE CHARGER

The **LED Function Chart** below describes the charging process.

Display	Operating condition
Red Green	When the red LED is on, it indicates that your battery is discharged and the Model 77198 is recharging at the "BULK" rate (stage 1). This charging rate is 5 Amps. While the red LED is on, the voltage measured (with the charger on) will be approx. 22 to 26 Volts. If the red LED stays on for more than 24 hours, refer to Problem 1 in the troubleshooting section in this manual.
Red Green	When both the green and the red LED's are on, the Model 77198 is charging at an "ABSORPTION" rate of between 2 and 4.5 Amps (stage 2). This mode of charging gradually "tops off" your battery, and reduces harmful sulfating. While both LED's are on, the voltage measured (with the charger on) should be approx. 28.3 to 30VDC. If both LED's stay on longer than 24 hours, refer to Problem 2 in the troubleshooting section in this manual.
Red Green	When the green LED is on, the Model 77198 is charging at a "FLOAT" or "MAINTENANCE" rate of less than 2 Amps, (stage 3). Your battery is now 90% charged and ready for use. This "float" charging current will gradually decrease to as low as 0.1 Amps as the battery reaches 100% charge. It will now be kept at full charge without over-charging. If the green LED stays on when your battery is known to be low, refer to Problem 3 in the troubleshooting section in this manual.

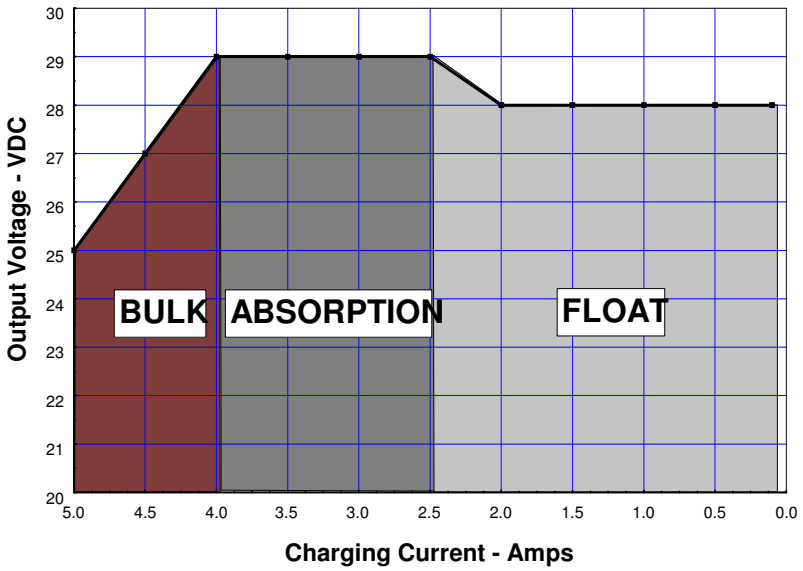

Model 77198 Charging Method

5. TROUBLESHOOTING

Problem	Cause	Solution
1. Red LED stays on for more than 24 Hrs.	1. One or more defective or damaged cells. 2. Charger has reduced its output voltage below the normal level due to a DC overload or a DC short. 3. On-board DC systems are drawing more current than the charger can replace.	1. Load test the battery and replace if necessary. 2. Remove the source of the overload or short. Disconnect the charger's black (NEGATIVE) ring terminal from the battery. Reapply AC power and the green LED only should now light. 3. Turn off all DC equipment while charging.
2. The red and green LED's stay on for more than 24 Hrs.	1. On-board DC systems are drawing between 2 – 4.5A. 2. One or more defective or damaged cells. 3. Extremely low AC voltage at the battery charger	1. Turn off all DC equipment while charging. 2. Load test the battery and replace if necessary. 3. Apply a higher AC voltage source or reduce the length of the extension cord.
1. Green LED stays on when the battery is known to be low.	1. Open DC output fuse. 2. Faulty or contaminated terminal connections. 3. One or more defective or damaged cells.	1. Replace DC output fuse with a Bussmann (AGX-10 or AGC-10). 2. Clean and tighten or repair all terminal connections. 3. Load test the battery and replace if necessary.
2. Neither of the LED's turn on when the AC power is applied.	1. No AC power available at the charger 2. Component failure	1. Connect AC power or reset the AC breaker on the main panel

6. MAINTAINING THE CHARGER

Periodically clean both battery terminals with baking soda and tighten all connections. No other maintenance on the charger is required.

7. **SPECIFICATIONS**

Output:	
Charging:	24 Volts DC at 5 Amps
Maintaining:	27.1 Volts DC at 0.1 Amps
Input:	
Rated AC Voltage	100 – 130 VAC, 50/60 Hz
Current Draw	3.0 Amps at full output
Maximum recommended battery size:	
For recharging:	Up to 150 Amp-Hours
Maintenance only:	Up to 300 Amp-Hours
Physical Dimensions:	
Height:	7.4 in. (18.8 cm.)
Width:	6.3 in. (16.0 cm.)
Depth:	2.4 in. (6.0 cm.)
Weight:	4.5 lb. (2.0 kg)

FCC Class B EMC Notice

This equipment has been tested and found to comply with the limits for a Class B digital device, pursuant to part 15 of the FCC Rules. These limits are designed to provide reasonable protection against harmful interference when the equipment is operated in a commercial environment. This equipment generates, uses and can radiate radio frequency energy and, if not installed and used in accordance with the instructions, may cause harmful interference to radio communications. Operation of this equipment in a residential area is likely to case harmful interference in which case the user will be required to correct the interference at his own expense.

If this equipment does cause harmful interference to radio or television reception, which can be determined by turning this equipment off and on, the user is encouraged to try to correct the interference by one or more of the following measures:

---Reorient or relocate the receiving antenna.

---Increase the separation between the equipment and receiver.

---Connect the equipment into an outlet on a circuit different from that to which the receiver is connected.

727533 Rev. C

Katolight Part #77051 MODEL 2608

6 AMP ON BOARD BATTERY CHARGER
OWNER'S MANUAL

Connections at a glance:

The Model 77051 is designed to be used as an on board charger for lead acid batteries (flooded cell or AGM types) and gel cell batteries. We recommend that you set up the charger near the battery you wish to charge, and make connections in the following order:

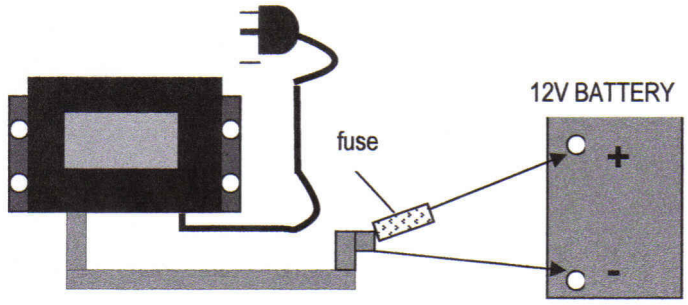

1. Charger POS (Red wire with fuse) to battery " + ".
2. Charger NEG (black wire) to battery " – ".
3. Plug AC line cord into a GFCI protected wall socket.
4. Remove connections in the reverse order.

SAVE THESE INSTRUCTIONS

1. INTRODUCING THE CHARGER

The Model 77051 is designed to both recharge your battery, and extend your battery's life in applications where it is stored for long periods of time. The Model 77051 is a "3-stage" electronic battery charger. Rainproof, lightweight, silent, and completely automatic, it produces 12 Volts DC at a full 6 Amps, while using much less AC current than older chargers. Unlike automotive "trickle" chargers, the Model 77051 will not boil off the electrolyte in a lead-acid battery when left unattended. When the Model 77051 is attached to your battery and plugged into a standard 115 Volt / 60 Hz AC outlet, the red and green LED's let you know the unit is *recharging* and *maintaining* your battery. This sophisticated device is ideal for recharging and maintaining the 12VDC battery in your boat, electric vehicle or cart, ATV, snowmobile or motorcycle.

2. IMPORTANT SAFETY INSTRUCTIONS

This manual contains important safety and operating instructions for the charger. Read the entire manual before using. Also read all instructions and cautions for and on the charger, batteries and equipment in the vicinity of the batteries.

WARNINGS

THIS CHARGER SHOULD BE USED TO CHARGE ONLY 12VOLT DC LEAD ACID OR GEL CELL TYPE BATTERY SYSTEMS. USE ON OTHER THAN A 12 VDC SYSTEM CAN CAUSE THE BATTERY TO EXPLODE AND CAUSE PERSONAL INJURY.

RISK OF EXPLOSIVE GASES! WORKING IN THE VICINITY OF A LEAD ACID BATTERY IS DANGEROUS. A BATTERY GENERATES EXPLOSIVE GASES DURING NORMAL OPERATION. THEREFORE IT IS OF UTMOST IMPORTANCE THAT EACH TIME BEFORE USING YOUR CHARGER YOU FOLLOW THE INSTRUCTIONS EXACTLY.

Personal Safety Precautions

Adhere to the following personal safety precautions when installing or working with the chargers:

1. Someone should be within voice range or close enough to come to your aid when you work near a lead-acid battery.
2. Have plenty of fresh water and soap nearby in case battery acid contacts skin, clothing, or eyes.
3. Wear complete eye protection and clothing protection. Avoid touching eyes while working near a battery.
4. If battery acid contacts skin or clothing, wash them immediately with soap and water. If acid enters the eye, flood the eye with cold, running water for at least ten minutes and get medical attention.
5. Never smoke or allow an open flame in the vicinity of the battery.
6. Do not drop a metal tool onto the battery. It may spark, short circuit the battery and may cause an explosion.
7. Remove all personal metal items such as rings, bracelets, necklaces, and watches when working near a lead-acid battery. A battery can produce short circuit currents high enough to weld a ring or the like to metal, causing a severe burn.

Preparing to Charge Precautions

Before charging a battery with the charger, read the following precautions:

1. Do **NOT** operate the charger if the input or output cables or an LED is damaged.
2. Make sure all accessories on the product you are charging are **OFF**.
3. If the battery or batteries must be removed from the product, always remove the grounded terminal from the battery first.
4. Be sure the area around the battery is well ventilated while the battery is being charged. Gas can be forcefully blown away using a piece of cardboard or other non-metallic material as a “hand fan”.
5. Clean battery terminals. Be careful to keep corrosion from coming in contact with eyes.
6. Add distilled water in each cell until battery acid reaches levels specified by the battery manufacturer. Do not overfill. For a battery without cell caps, carefully follow the manufacturer’s recharging instructions.
7. Never allow the ring terminals to touch each other.
8. **NEVER** charge a frozen battery.

Grounding Precautions

DANGER

Do not operate this charger with a two bladed adapter plug or extension cord. Doing so can result in serious personal injury.

CAUTION: To reduce the risk of shock, connect only to a properly grounded outlet.

3. INSTALLING THE CHARGER

Choosing Charging Location

The charger should have at least eight inches of unobstructed area on all sides of the unit for effective cooling. The case of this charger will become warm during operation. Do not install the charger on carpeted, upholstered, or varnished surfaces. Keep the AC power cord connection as short as possible especially when using an extension cord.

Mounting the Charger

1. Use corrosion resistant ¼" dia. bolts, backed by a flat washer, and secured to the mounting surface with a split-ring lock washer.
2. Hold the charger to the mounting surface and mark the holes.
3. Remove the charger and drill the mounting holes.
4. Align the charger and assemble the mounting hardware. Secure.

Making DC Connections

1. Check polarity of the battery posts. The POSITIVE (POS., P, +) battery post usually has a larger diameter than the NEGATIVE (NEG., N, -) post.
2. Attach the red POSITIVE ring terminal (identified by the red POSITIVE label on the red or white output wire) from the charger to the POSITIVE post of the battery. Attach the black NEGATIVE ring terminal (black output wire) from the charger to the NEGATIVE post of the battery.
3. When disconnecting the battery charger, first disconnect the AC power cord, then remove the black (NEGATIVE) ring terminal from the battery terminal and then remove the red (POSITIVE) ring terminal from battery terminal.

Making AC Power Connections

After securing the battery connections, plug the AC line cord into an available AC outlet that is protected by a Ground Fault Circuit Interrupter (GFCI) breaker. Keep the AC power cord connection as short as possible especially when using an extension cord.

4. OPERATING THE CHARGER

The **LED Function Chart** below describes the charging process.

Display	Operating condition
Red Green	When the red LED is on, it indicates that your battery is discharged and the Model 77051 is recharging at the "BULK" rate (stage 1). This charging rate is 6 Amps. While the red LED is on, the voltage measured (with the charger on) will be 11.8 to 14 Volts. If the red LED stays on for more than 24 hours, refer to Problem 1 in the troubleshooting section in this manual.
Red Green	When both the green and the red LED's are on, the Model 77051 is charging at an "ABSORPTION" rate of between 1.5 and 5 Amps (stage 2). This mode of charging gradually "tops off" your battery, and reduces harmful sulfating. While both LED's are on, the voltage measured (with the charger on) should be approx. 14.0 to 14.5VDC. If both LED's stay on longer than 24 hours, refer to Problem 2 in the troubleshooting section in this manual.
Red Green	When the green LED is on, the Model 77051 is charging at a "FLOAT" or "MAINTENANCE" rate of less than 1.5 Amps, (stage 3). Your battery is now 90% charged and ready for use. This "float" charging current will gradually decrease to as low as 0.1 Amps as the battery reaches 100% charge. It will now be kept at full charge without over-charging. If the green LED stays on when your battery is known to be low, refer to Problem 3 in the troubleshooting section in this manual.

Model 77051 Charging Method

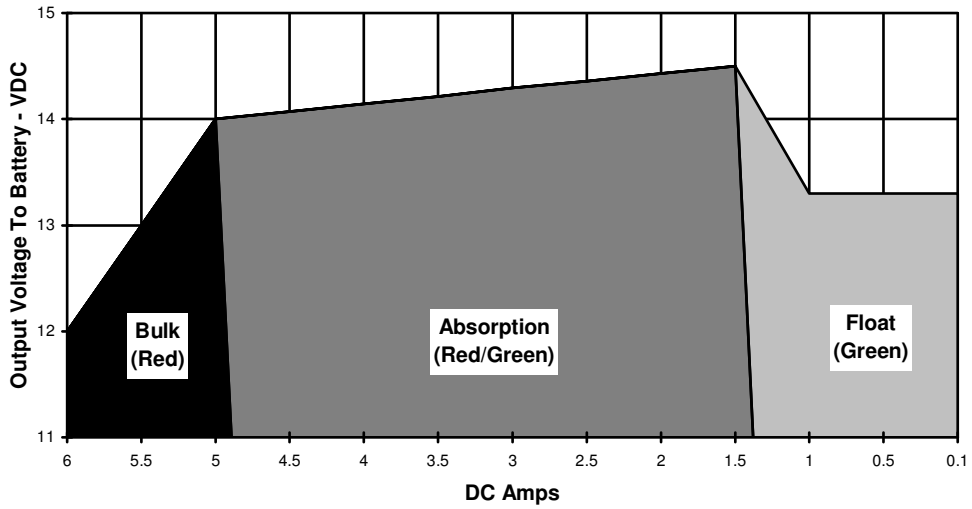

5. TROUBLESHOOTING

Problem	Cause	Solution
1. Red LED stays on for more than 24 Hrs.	1. One or more defective or damaged cells. 2. Charger has reduced its output voltage below the normal level due to a DC overload or a DC short. 3. On-board DC systems are drawing more current than the charger can replace.	1. Load test the battery and replace if necessary. 2. Remove the source of the overload or short. Disconnect the charger's black (NEGATIVE) ring terminal from the battery. Reapply AC power and the green LED only should now light. 3. Turn off all DC equipment while charging.
2. The red and green LED's stay on for more than 24 Hrs.	1. On-board DC systems are drawing between 1.5 – 5A. 2. One or more defective or damaged cells. 3. Extremely low AC voltage at the battery charger	1. Turn off all DC equipment while charging. 2. Load test the battery and replace if necessary. 3. Apply a higher AC voltage source or reduce the length of the extension cord.
1. Green LED stays on when the battery is known to be low.	1. Open DC output fuse. 2. Faulty or contaminated terminal connections. 3. One or more defective or damaged cells.	1. Replace DC output fuse with a Bussmann (AGX-10). 2. Clean and tighten or repair all terminal connections. 3. Load test the battery and replace if necessary.
2. Neither of the LED's turn on when the AC power is applied.	1. No AC power available at the charger 2. Component failure	1. Connect AC power or reset the AC breaker on the main panel

6. MAINTAINING THE CHARGER

Periodically clean both battery terminals with baking soda and tighten all connections. No other maintenance on the charger is required.

7. **SPECIFICATIONS**

Output:	
Charging:	12 Volts DC (min.) at 6 Amps
Maintaining:	13.30 Volts DC at 0.1 Amps
Input:	
Rated AC Voltage	100 – 130 VAC, 50/60 Hz
Current Draw	1.6 Amps at full output
Maximum recommended battery size:	
For recharging:	Up to 150 Amp-Hours
Maintenance only:	Up to 300 Amp-Hours
Physical Dimensions:	
Height:	3.5 in. (8.9 cm.)
Width:	6.4 in. (16.3 cm.)
Depth:	2.1 in. (5.3 cm.)
Weight:	3.5 lb. (1.6 kg)

FCC Class A EMC Notice

This equipment has been tested and found to comply with the limits for a Class A digital device, pursuant to part 15 of the FCC Rules. These limits are designed to provide reasonable protection against harmful interference when the equipment is operated in a commercial environment. This equipment generates, uses and can radiate radio frequency energy and, if not installed and used in accordance with the instructions, may cause harmful interference to radio communications. Operation of this equipment in a residential area is likely to case harmful interference in which case the user will be required to correct the interference at his own expense.

If this equipment does cause harmful interference to radio or television reception, which can be determined by turning this equipment off and on, the user is encouraged to try to correct the interference by one or more of the following measures:

---Reorient or relocate the receiving antenna.

---Increase the separation between the equipment and receiver.

---Connect the equipment into an outlet on a circuit different from that to which the receiver is connected.

727303 Rev. D

Interacter Battery Charger

Lineage Series 3-Stage

KATOLIGHT CORPORATION

HIGHLIGHTS

- Microprocessor controlled
- Fully automatic
- Battery chargers with proportional timing

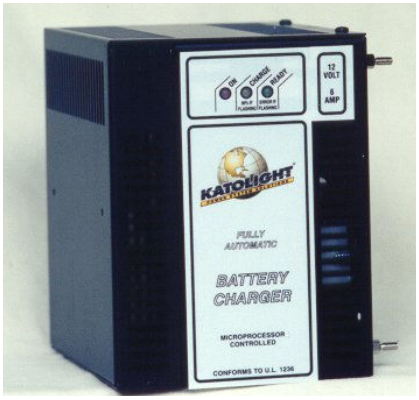

DESCRIPTION

The Interacter “LS” battery charger is specifically engineered to meet the demands of the informed consumer who knows that today’s Hi-Tech batteries must be charged correctly, at a competitive price. Like the Professional Series, the Lineage Series features a microprocessor controlled system that out-performs industry standard chargers in its price range. The LS has our patented three stage constant current, constant voltage charging format. The most important feature of the LS is the exclusive proportional timing which automatically adjusts the recharge time in order to achieve optimal performance on new or old, partially or deeply discharged batteries.

BENEFITS

- Float Stage – automatically compensates for battery’s self-discharge, minimizing electrolyte loss
- No D.C. parasitic losses when A.C. is off
- Epron Technology – utilizes a patented design microprocessor controlled circuitry
- Automatic short-circuit protection
- Polarity protection – reverse connection shutdown
- Low voltage start – the LS charger will begin to charge batteries with voltages of less than 2 volts
- Reliable SCR phase control
- Increased battery cycle life – external temperature compensation (optional)
- Modular construction
- User friendly – easy to read ON/ CHARGE/ READY LED charge indicators
- Fast charging – exclusive proportional timing
- Durable – powder coated finish
- Three stage format – the charge format is multi-stage, providing for fast controlled recharge
- Portable
- Safety/Fault – automatic override timer

Interacter Battery Charger

Lineage Series 3-Stage

Model	DC Output Amps	DC Output Volts	AC Input Amps	AC Input Volts	AC Input Frequency	Length In. (mm)	Width In. (mm)	Height In. (mm)	Weight Lbs. (kg)
LS 6/6	6	6	1	117*	60Hz	6.0 (152.4)	6.5 (165.1)	5.25 (133.3)	5.2 (2.35)
LS 12/2	2	12	2	117*	60Hz	6.0 (152.4)	6.5 (165.1)	5.25 (133.3)	5.2 (2.35)
LS 12/6	6	12	2	117*	60Hz	6.0 (152.4)	6.5 (165.1)	5.25 (133.3)	5.2 (2.35)
LS 24/3	3	24	2	117*	60Hz	6.0 (152.4)	6.5 (165.1)	5.25 (133.3)	5.7 (2.58)
LS 24/5	5	24	3	117*	60Hz	6.0 (152.4)	6.5 (165.1)	5.25 (133.3)	9.5 (4.3)
LS 36/3	3	36	2	117*	60Hz	6.0 (152.4)	6.5 (165.1)	5.25 (133.3)	9.5 (4.3)

*International Voltages Available

For support or information, call us at 800-325-5450 or visit us at www.katolight.com

Materials and specifications subject to change without notice.
© Katolight Corporation. 100 Power Drive, Mankato, MN 56001

BATTERY CHARGER OWNER'S MANUAL

KATOLIGHT MODELS
LS-12 AND LS-24

---- CAUTION ----
READ THIS MANUAL CAREFULLY FOR
RULES OF SAFE OPERATION AND
PROPER USE OF THE CHARGER

*** SAVE THESE INSTRUCTIONS ***

Katolight offers a range of high performance Battery Chargers for use in demanding applications, featuring a patented **microprocessor** system that out-performs all industry standard chargers in their class.

The **THREE STAGE**, Constant Current, Constant Voltage, Proportionally timed system used in all Katolight models provides fast charging and optimal timing over a wide range of battery sizes and depths of discharge.

STANDARD FEATURES OF ALL *KATOLIGHT* CHARGERS:

- HIGH ENERGY RETURN, FAST CHARGING
- CONSTANT CURRENT FIRST STAGE
- DUAL VOLTAGE LIMIT (CYCLIC / STANDBY)
- PROPORTIONAL TIMED CYCLIC CHARGE STAGE
- CONSTANT VOLTAGE FLOAT STANDBY
- AUTOMATIC SAFETY OVERRIDE TIMER
- START DELAY ON BATTERY CONNECT
- SHORT AND REVERSE CONNECTOR SHUTDOWN
- RUGGED SCR PHASE CONTROL
- MAINS ZERO-CROSSING BATTERY SENSING

(LS) MODELS are the most cost-effective series and are available for 12, and 24-volt batteries, rated at up to 6 Amps.

KATOLIGHT SERIES 12 & 24 VOLT SPECIFICATIONS

MODEL: LS 12/6 & LS 24/5

Full Wave Phase Controlled Rectification

CONTROL:

Voltage limited to 2.4 Volts/Cell
Current limited to AMP rating Mean D.C.
Finish Voltage 2.3 Volts/Cell
Proportional Timed Cyclic Charge Stage
Flashing Yellow LED-to Show 80% State of Charge

PROTECTION:

Electronic reverse polarity
Short circuit shutdown
Low voltage start
Optional: Temperature compensation

DIMENSIONS:

6.5" WIDE
6.0" FRONT TO BACK
5.25" HIGH

NET WEIGHT: 6 lbs.

GROSS WEIGHT: 7.5 lbs.

LISTED

CONFORMS TO

U.L. 1236

AND CSA

CONFORMS TO
U.L. 1236
11090064500 LR 92516-1

IMPORTANT SAFETY INSTRUCTIONS

1. SAVE THESE INSTRUCTIONS – This manual contains important safety and operating instructions for all KATOLIGHT battery chargers.

2. Before using this battery charger, read all instructions and cautionary markings on (1) the battery charger, (2) the battery, (3) product using the battery.

3. CAUTION – To reduce the risk of injury, charge only lead acid, maintenance free or flooded lead acid type rechargeable batteries. Other types of batteries may burst causing personal injury and damage.

4. Do not expose charger to rain or snow.

5. Use of an attachment not recommended or sold by the battery charger manufacturer may result in a risk of fire, electric shock or injury to person.

6. To reduce the risk of damage to electric plug and cord, pull by plug rather than cord when disconnecting charger.

7. Make sure cord is located so that it will not be stepped on, tripped over or otherwise subjected to damage or stress.

8. An extension cord should not be used unless absolutely necessary. Use of improper extension cord could result in risk of fire and electrical shock. If an extension cord must be used, make sure:

a) That pins on the plug of the extension cord are the same number, size and shape as thos the plug on the charger

b) That the wire size is large enough for the A/C ampere of the charger as specified in the TABLE BELOW:

LENGTH OF CORD (feet)	25	50	100	150
AWG Wire Size	18	18	16	14

9. Do not operate charger with damaged cord or plug. REPLACE THEM IMMEDIATELY.

10. Do not operate charger if it has received a sharp blow, been dropped or otherwise damaged in any way; return it to a qualified service source.

11. Do not disassemble charger; take it to a qualified service source when repair or service is required. Incorrect reassembly may result in a risk of electrical shock or fire.

12. To reduce the risk of electrical shock, unplug charger from outlet before attempting any maintenance or cleaning.

WARNING
RISK OF
EXPLOSIVE GASES

1. WORKING IN VICINITY OF A LEAD-ACID BATTERY IS DANGEROUS. BATTERIES GENERATE EXPLOSIVE GASES DURING NORMAL BATTERY OPERATION. FOR THIS REASON, IT IS OF THE UTMOST IMPORTANCE THAT EACH TIME BEFORE USING YOUR CHARGER, YOU READ THIS MANUAL AND FOLLOW THE INSTRUCTIONS EXACTLY.

2. To reduce the risk of battery explosion, follow these directions and those published by the battery manufacturer and the manufacturer of any equipment you intend to use in the vicinity of the battery. Review cautionary markings on these products and on engine.

PERSONAL
PRECAUTIONS

1. Someone should be within range of your voice or close enough to come to your aid when you work near a lead-acid battery.

2. Have plenty of fresh water and soap nearby in case battery acid contacts skin, clothing or eyes.

3. Wear complete eye protection and clothing protection. Avoid touching eyes while working near battery.

4. If battery acid contacts skin or clothing, wash immediately with soap and water. If acid enters eyes, immediately flood eyes with running cold water for at least 10 minutes and get medical attention immediately.

5. NEVER smoke or allow a spark or flame in the vicinity of battery or engine.

6. Be extra cautious to reduce risk of dropping a metal tool onto battery. It might spark or short-circuit battery or other electrical part that may cause an explosion.

7. Remove personal metal items such as rings, bracelets, necklaces, and watches when working with a lead-acid battery. A lead-acid battery can produce a short circuit current high enough to weld a ring or the like to metal, causing a severe burn.

8. Use charger for charging a LEAD-ACID BATTERY ONLY. Do not use battery charger for charging dry-cell batteries that are commonly used with home appliances. These batteries may burst and cause injury to persons and damage to property.

9. NEVER charge a frozen battery.

PREPARING TO CHARGE

1. If necessary to remove battery from unit to charge, always remove grounded terminal from battery first. Make sure all accessories on unit are off so as not to cause an arc.

2. Be sure area around battery is well ventilated while battery is being charged. Using a piece of cardboard or other nonmetallic material as a fan can forcefully blow gas away.

3. Clean all battery terminals. Be careful to keep corrosion from coming in contact with eyes.

4. Add distilled water in each cell until battery acid reaches level specified by battery manufacturer. This helps purge excessive gas from cells. Do not overfill. For a battery without cell caps, carefully follow manufacturer's recharging instructions.

5. Study all battery manufacturer's specific precautions such as removing or not removing cell caps while charging and recommended rates of charge.

6. Determine voltage of battery by referring to equipment owner's manual and make sure it matches output rating of battery charger.

CHARGER LOCATION

1. Locate charger as far away from battery as charging cables will permit.

2. Never place charger above battery being charged; gasses from battery will corrode and damage charger.

3. Never allow battery acid to drip on charger when reading specific gravity or filling battery.

4. Do not operate charger in a closed-in area or restrict ventilation in any way.

5. Do not set a battery on top of charger.

DC CONNECTION PRECAUTIONS

1. Connect and disconnect DC output only after removing AC cord from electrical outlet. Never allow output leads to touch each other.

2. Attach leads to battery connections and twist or rock back and forth several times to make a good connection. This tends to keep leads from slipping off terminals and helps to reduce risk of sparking (applies to chargers supplied loose only).

FOLLOW THESE STEPS WHEN BATTERY IS INSTALLED ON UNIT AND CHARGER IS NOT FACTORY INSTALLED. A SPARK NEAR A BATTERY MAY CAUSE BATTERY EXPLOSI

TO REDUCE RISKS:

1. Carefully position AC and DC cords to reduce risk of damage by personnel or moving engine parts.

2. Stay clear of fan blades, belts, pulleys and other parts that can cause injury to persons.

3. Check polarity of battery posts. POSITIVE (POS, P, +), battery posts usually have a larger diameter than the NEGATIVE (NEG, N, -) posts.

4. Determine which post of battery is grounded (connected) to the chassis.

5. Connect POSITIVE lead from battery charger to POSITIVE (POS, P, +) UNGROUNDED CONNECTION OF THE BATTERY. Connect NEGATIVE (BLACK) lead to unit chassis or engine block away from battery.

6. When disconnecting charger, turn switch off, or disconnect AC cord. Then remove connections.

GROUNDING AND AC POWER CORD INSTRUCTIONS

Charger should be grounded to reduce risk of electrical shock. Unless factory hardwired, the charger is equipped with an electrical cord having equipment grounding conductor and a grounding pin. This plug must be plugged into an outlet that is properly installed and grounded in accordance with all local codes and ordinances.

DANGER – Never alter AC cord or plug provided. If it will not fit outlet, have proper outlet installed by a qualified electrician. Improper connection can result in a risk of an electrical shock.

This battery charger is for use on a nominal 117 volt AC circuit and has a grounded plug.

"KATOLIGHT SERIES" OPERATING INSTRUCTIONS

1. Disconnect unit battery cables.

2. Connect charger to battery. Ensure correct polarity. BLACK lead to NEGATIVE (-) terminal and RED lead to POSITIVE (+) terminal.

NOTE: THE CHARGER IS PROTECTED AGAINST REVERSE CONNECTION. CHARGING WILL NOT COMMENCE IF THE BATTERY IS INCORRECTLY CONNECTED.

3. Connect the charger to an AC power supply. Check that the Red (Power) and Yellow (Charge) indicator LED's are ON. After a time (which depends on how heavily the battery is discharged), the yellow Led will begin to flash, indicating the battery has reached 80% recharge level.

4. After a further time, the Green "Ready" Led will indicate that the battery is fully charged. The minimum time before the green "Ready" Led shows is one hour. The battery should be left on charge until required for use.

NOTE: The length of time the charger remains in theYellow charging mode depends on the size and "State of Charge" of the battery. This function is controlled by the Solid State Circuitry of the charger, which provides the correct charge profile automatically. This charger can be left connected to the battery for extended periods of time safely.

SPECIAL NOTE: BATTERIES THAT HAVE A SUSPECT CONDITION PARTICULARLY "SULFATED CELLS", MAY WHEN FIRST CONNECTED, GO DIRECTLY TO THE "FLASHING YELLOW" LED INDICATION. THEN AFTER CURRENT FLOW BEGINS, THE YELLOW **CHARGE** LED STAYS ON INDICATING THAT A NORMAL CHARGE CYCLE IS NOW OPERATING. THIS SHOULD BE CONSIDERED NORMAL OPERATION FOR THE "LINEAGE SERIES" CHARGER.

TROUBLESHOOTING GUIDE

YELLOW **CHARGE** LIGHT DOES NOT SWITCH ON; the charger will not commence charging unless properly connected.

1. Check to ensure the charger is connected correctly, BLACK lead to NEGATIVE (-) terminal and RED lead to POSITIVE (+) terminal or that the factory installed OEM (Original Equipment Manufacturer) custom connector is properly installed regarding the polarity at the connectors contact terminals or at the mating connector on the battery or equipment.

2. Check that the output leads made a good connection to the battery connections.

GREEN **READY** LIGHT DOES NOT APPEAR AFTER 18 HOURS:

3. The Microprocessor can indicate a problem with the battery. If the battery has not reached the end of the First Stage of Operation within 18 hours, the charger may determine that a problem exists within the battery or the battery is too big for the charger's Output Rating. The GREEN LED "FLASHING" shows the OVERRIDE TIMER FUNCITON and battery should be examined for defects.

SERIES AND PARALLEL CHARGING

1. Two or more 12-volt batteries may be bank charged with the (1) charger if they are connected in parallel as shown below.

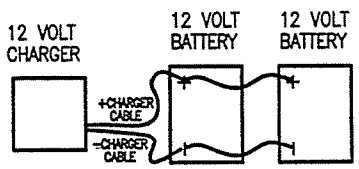

2. One 12-volt battery may be charged with the (1) charger if it is connected as shown below.

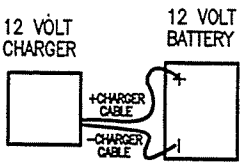

NOTE: It is important that the batteries in the circuit be of the same type (e.g. maintenance free only or conventional lead-acid only). Mixing different types of batteries in the same circuit will result in improper charging.

24 VOLT CHARGER SERIES CHARGING

1. Two 12-volt batteries may be charged with a 24-volt charger if they are connected in series as shown below.

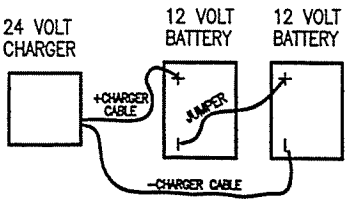

CAUTION: EXTREME CARE SHOULD BE TAKEN TO CONNECT THE BATTERIES ONLY AS SHOWN ABOVE. IMPROPER CONNECTION CAN RESULT IN EXPLOSION AND SERIOUS INJURY.

STORAGE INSTRUCTIONS

1. When not in use, store the charger indoors in a cool dry place, preferably with its original packing and carton.
2. Place these instructions with the charger during storage.

MAINTENANCE AND CLEANING

Very little maintenance is required other than protecting it from damage and weather.

1. Coil cord when not in use.
2. Clean case and cords with a slightly damp cloth.

3. Examine cords for damage periodically and replace if necessary with manufacturer approved parts.

SERVICE

This charger is a solid state device and should not require service under normal operating conditions and use according to these instructions. For service, call or write the manufacturer.

CAUTION – RISK OF ELECTRICAL SHOCK. Do not attempt any servicing unless you are qualified to do so.

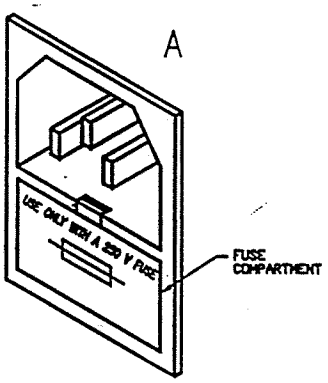

All Katolight Lineage Series chargers have an AC input fuse located in the fuse drawer found below the AC power cord. To access the fuse, you must remove the power cord first and use a screwdriver to open the fuse compartment. If the fuse requires replacement, the same type and value fuse must be used. The rating for the fuse is found on the serial number label.

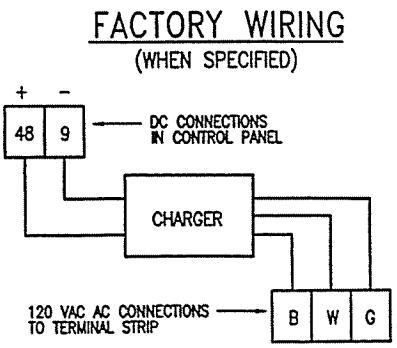

KATOLIGHT BATTERY CHARGER LIMITED WARRANTY

Katolight Corp. warrants the accompanying Katolight battery charger (the "UNIT") to be free from defects in materials and workmanship for a period of 12 months from the date of purchase. In addition, Katolight Corp. warrants the transformer for a period of two years. This warranty applies to normal use and is subject to the terms and conditions given below.

For performance of the warranty, contact your local Katolight distributor or **KATOLIGHT CORP.** at (800) 325-5450 for information. If it is necessary to return the Unit for repair or replacement, you will be given a return authorization number. The Unit must be returned freight prepaid, in the original factory carton in order to prevent damage. Warranty does not cover such damage.

To qualify for warranty service, the following must be returned with the Unit; (a) a letter explaining difficulties experienced with the Unit, (b) the return authorization number and (c) a copy of proof of the original purchase, such as a sales receipt or canceled check.

Failure to operate or maintain the Unit in compliance with the instructions furnished in the owner's manual, unreasonable use, use of replacement parts and repairs not authorized by the manufacturer, accidents, negligence or commercial use voids this warranty. Parts subject to normal wear and tear are not covered by this warranty.

Should a Unit be returned for a cause not covered by this warranty or without the items specified above, any repairs, handling or testing will be made at the owner's expense and risk.

ALL IMPLIED WARRANTIES, INCLUDING, BUT NOT LIMITED TO, ANY IMPLIED WARRANTIES OF MERCHANTABILITY OR FITNESS ARE LIMITED IN DURATION TO NINETY (90) DAYS. REPAIR OR REPLACEMENT AS STATED HEREIN IS THE OWNER'S SOLE REMEDY. FOR BREACH OF ANY KIND AND ALL WARRANTIES AND THE SOLE REMEDY FOR KATOLIGHT CORP. LIABILITY OF ANY KIND WITH RESPECT TO THE UNIT.

THERE SHALL BE NO LIABILITY FOR SPECIAL, INCIDENTAL, OR CONSEQUENTIAL DAMAGES, INCLUDING BUT NOT LIMITED TO, LOSS OF USE, INCONVENIENCE, LOSS OF TIME, OR DAMAGES TO ANY BUSINESS PROPERTY, WHETHER AS A RESULT OF BREACH OF WARRANTY, NEGLIGENCE, STRICT LIABILITY IN TORT, OR OTHERWISE.

This warranty gives you specific legal rights. You may have other rights that vary from state to state. Some states do not allow limitations on the length of any implied warranty or the limitations or exclusion of incidental or consequential damages. Because of this, the above limitations or exclusions may not apply to you.

MODEL:_____ VOLT:_____ AMP:_____ SERIAL #:_____
(Record for your records)

Katolight Corporation
100 Power Drive
PO Box 3229
Mankato, MN 56002-3229

LC BATTERY CHARGER

OPERATION & MAINTENANCE GUIDE

Dependable Power Solutions . . . It's All We Do!

100 Power Drive Mankato, MN 56001
Phone 507.625.7973 Fax 507.625.2968 Toll Free 800.325.5450 www.katolight.com
LC_KL_Manual_8-03

IMPORTANT SAFETY INSTRUCTIONS

SAVE THESE INSTRUCTIONS

This manual contains important safety and operating instructions for Stored Energy Systems (SENS) model LC. Before using the battery charger, read all instructions and cautionary markings on the battery charger, battery and equipment connected to the battery system.

WARNING:
Please read these safety warnings and heed them. Failure to do so could result in either severe personal injury or equipment damage.

This equipment uses and generates potentially lethal voltages. The equipment should only be installed and maintained by trained persons.

To reduce the risk of injury, charge only properly sized lead-acid or nickel cadmium batteries. Other types of batteries or under-sized batteries may burst, causing personal injury and damage.

- Do not install or operate charger if it has been dropped or otherwise damaged. Return it to the factory for repair.
- Install the charger in accordance with all local codes.
- Do not expose charger to rain or snow.
- Do not disassemble charger; return to factory when service or repair is required. Incorrect assembly may result in a risk of electric shock or fire.
- To reduce risk of electric shock, de-energize and disconnect the AC input and the battery from the charger before attempting maintenance or cleaning.
- Use of an accessory not recommended or sold by SENS may result in a risk of fire, electric shock or personal injury.
- During normal operation, batteries may produce explosive hydrogen gas. *Never smoke, use an open flame, or create sparks near the battery or charger.*
- Remove jewelry, watches, rings, etc. before installing battery or charger.

1
READ THIS BEFORE PROCEEDING!

- **Changing factory-set potentiometer *voids the warranty* (see back page). Contact the factory if the settings on your charger are incorrect.**

- **Do not connect the battery leads to the charger backwards.**

If you feel that the charger is not working correctly, first check the following:

1. Is AC power available to the charger?
2. Is the charger connected to a battery of the correct voltage? (the charger must be connected to a battery for it to operate at the correct voltage).
3. Was the charger damaged in transit or installation (check for construction debris, particularly metal, inside the charger)
4. If the charger appears not to be working check the battery's state of charge. If the battery is fully charged it is sometimes normal for the charger to indicate zero current flow. Also check the battery for shorted or open cells.
5. If the battery is being over- or undercharged, check whether the output voltage settings have been tampered with. The potentiometers should be covered with either white adhesive paper dots or a hard red varnish.

Call SENS toll-free service line [800-742-2326] during the hours indicated on the front cover for help if you have any installation or operation questions --this will save you time and trouble.

2
Installation

Mechanical

Mount charger vertically on a clean, dry, fixed wall protected from extremes of temperature. Allow 6 inches above and below the unit and 3 inches on either side for proper ventilation. If the charger must be mounted on or in a vibrating enclosure, the mounting arrangement must provide full vibration isolation.

Protect the charger from construction grit, metal chips, paint or other debris. Clean away debris after installation.

Electrical

Remove the two screws securing the charger's lower front panel.

WARNING: AC input leads and earth ground must enter the charger through the conduit hole on the LEFT side of the charger. DC output leads must exit the charger through the RIGHT side of the charger.

Connect earth ground to the ground lug supplied in the lower left of the charger. Connect mains L and N to terminal block on printed circuit board.

Connect battery positive and negative to the correct terminals on the same terminal block. *Make sure that positive and negative polarity are correct!* Wire should be sized in accordance with local electrical codes. After making electrical connections, stow the AC input service loop inside the charger's left side (near the AC and ground terminations) and stow the DC output service loop inside the charger's right side (near DC output terminals).

WARNING: The battery charger should be connected to a grounded permanent wiring system. A ground terminal is provided for this purpose.

3 Operation

Apply AC power to the charger. Charger should start immediately. The charger will automatically recharge and maintain the battery with no further attention from the user.

4 Special Features of This Charger

The LC charger is equipped with **AUTOBOOST**, which automatically operates at a high charge rate until the current demanded by the battery is below about 50% of the charger's rating. At that point, the charger reverts to the float rate. When this happens it is normal for the ammeter to indicate zero current flow. Boost voltage is fixed at 1% to 5% above float, based on model. An adjustment to the float setting will cause the boost voltage to change in proportion to float.

The LC charger is **TEMPERATURE COMPENSATED** to match the negative temperature coefficient of the battery. Float voltage increases slightly as ambient temperature decreases, and decreases as ambient temperature increases.

The LC charger is electronically **CURRENT LIMITED**. When the charger is operating into a fully discharged battery, or is otherwise overloaded, charging voltage reduces so that the charger's rated output power in watts is not exceeded. The charger will operate satisfactorily into a short circuit indefinitely.

5 Troubleshooting

Symptom	Possible cause	Repair procedure
No output	Battery not connected	Connect battery
	No AC power	Restore AC
	Ammeter disconnected	Reconnect
	Defective control circuit	Call SENS for assistance
	Defective transformer	Call SENS for assistance
Overcharging	Improper voltage setting	Call SENS for assistance
	Defective control circuit	Call SENS for assistance
Undercharging	Improper voltage setting	Call SENS for assistance
	Defective control circuit	Call SENS for assistance

6 Specifications

Model	Input	Output
LC12-500-2	115 VAC, ±10%, 57-63 Hz	12 VDC (nominal), 3.5 amps
LC12-500-4	220 VAC, ±10%, 47-63 Hz	12 VDC (nominal), 3.5 amps
LC24-500-2	115 VAC, ±10%, 57-63 Hz	24 VDC (nominal), 3.5 amps
LC24-500-4	220 VAC, ±10%, 47-63 Hz	24 VDC (nominal), 3.5 amps
LC36-500-2	115 VAC, ±10%, 57-63 Hz	36 VDC (nominal), 3.5 amps
LC36-500-4	220 VAC, ±10%, 47-63 Hz	36 VDC (nominal), 3.5 amps
LC48-500-2	115 VAC, ±10%, 57-63 Hz	48 VDC (nominal), 2.0 amps
LC48-500-4	220 VAC, ±10%, 47-63 Hz	48 VDC (nominal), 2.0 amps

Voltage regulation

Temperature-compensated voltage regulation better than ±1% from no load to full load when input is within specified range.

Current limiting & overload protection

Inherent current limiting at 100% to 110% of rated output.

Temperature compensation
Output voltage changes in accordance with negative temperature coefficient of battery (-0.2% per degree C). This maximizes battery performance and life.

Protection
Current limited output; sustains short circuit.

Indicators
DC ammeter.

Controls & adjustments
Adjustment for float voltage; boost voltage is fixed at about 1% to 5% above float voltage.

Ambient
-10º C to +50º C. Humidity 5% to 95%, non-condensing. Natural convection cooled.

EnerGenius®



Installation & Operation Manual

NRG12-20: 12-Volt, 20-Amp Battery Charger
NRG24-20: 24-Volt, 20-Amp Battery Charger
NRG22-20: 12/24-Volt, 20-Amp Battery Charger

SENS Part Number:	101298
Document Revision:	D
DCN Number:	104630
Date:	August 19, 2004

Installation or service questions?
Call SENS at 1.800.742.2326 (303.678.7500)
between 8 a.m. and 5 p.m. (Mountain Time)
Monday through Friday.

SENS®
Our energy means business™

1840 Industrial Circle
Longmont, CO 80501
Phone: 303.678.7500
800.742.2326
Fax: 303.678.7504
Email: service@sens-usa.com
WWW: www.sens-usa.com

IMPORTANT SAFETY INSTRUCTIONS FOR INSTALLER AND OPERATOR

1. **SAVE THESE INSTRUCTIONS.**
2. **DO NOT EXPOSE CHARGER TO RAIN OR SNOW.**
3. Use of an attachment not recommended or sold by SENS may result in a risk of fire, electric shock, or injury to persons.
4. **ONLY TRAINED AND QUALIFIED PERSONNEL MAY INSTALL AND SERVICE THIS UNIT.**
5. Do not operate charger if it has received a sharp blow, been dropped, or otherwise damaged in any way; shut off power at the branch circuit protectors and have the unit serviced or replaced by qualified personnel.
6. To reduce risk of electric shock, disconnect the branch circuit feeding the charger before attempting any maintenance or cleaning. Turning off controls will not reduce this risk.

WARNING:
RISK OF EXPLOSIVE GASES.

A. **WORKING IN THE VICINITY OF A LEAD-ACID OR NICKEL-CADMIUM BATTERY IS DANGEROUS. STORAGE BATTERIES GENERATE EXPLOSIVE GASES DURING NORMAL BATTERY OPERATION. FOR THIS REASON, IT IS OF UTMOST IMPORTANCE THAT EACH TIME BEFORE USING YOUR CHARGER, YOU READ THIS MANUAL AND FOLLOW THE INSTRUCTIONS EXACTLY.**

B. To reduce the risk battery explosion, follow these instructions and those published by the battery manufacturer and the manufacturer of any equipment you intend to use in the vicinity of a battery. Review cautionary markings on these products and on the engine.

7. **PERSONAL PRECAUTIONS**

A. Someone should be within range of your voice or close enough to come to your aid when you work near a storage battery.

B. Have plenty of fresh water and soap nearby in case battery electrolyte contacts skin, clothing, or eyes.

C. Wear complete eye protection and clothing protection. Avoid touching eyes while working near a storage battery.

D. If battery electrolyte contacts skin or clothing, wash immediately with soap and water. If electrolyte enters eye, immediately flood the eye with running cold water for at least 10 minutes and get medical attention immediately.

E. **NEVER** smoke or allow a spark or flame in vicinity of battery or engine.

F. Be extra cautious to reduce risk of dropping a metal tool onto battery. It might spark or short circuit battery or other electrical part that may cause explosion. Using insulated tools reduces this risk, but will not eliminate it.

G. Remove personal metal items such as rings, bracelets, necklaces, and watches when working with a storage battery. A storage battery can produce a short circuit current high enough to weld a ring or the like to metal, causing a severe burn.

H. **Use this charger for charging LEAD-ACID or LIQUID ELECTROLYTE NICKEL-CADMIUM batteries only.** Do not use this battery charger for charging dry cells, alkaline, lithium, nickel-metal-hydride, or sealed nickel-cadmium batteries that are commonly used with home appliances. These batteries may burst and cause injuries to persons and damage to property.

I. **NEVER** charge a frozen battery.

SERVICE HOTLINE: 1.800.742.2326
1.303.678.7500

MODEL NUMBER CONFIGURATION

This manual contains important safety, installation and operating instructions for SENS battery charger model NRG12-20 (configured for 12V,20A only), NRG24-20 (configured for 24V, 20A only) and NRG22-20 (field configurable for 12V or 24V, 20A).

Model Number Breakout

NRG 22-20- ☐☐☐☐

Model	Output Voltage	Output Current	Input Voltage Frequency	Alarm System Code	Agency Code	Category Code
	12: 12 volts 24: 24 volts 22: 12/24 volts	20: 20 Amps	H: 120/208-240V, 50/60 Hz R: 120/208-240V, 60 Hz	C: 5 Alarms	L: UL, CUL Listed R: Recognized Component	S: Standard

NOTE: Not all configurations are available on all models.
Contact the factory for confirmation.
**UL listed, CSA certified
*UL listed, CSA certified and CE marked

INSTALLATION INSTRUCTIONS

WARNING:
ONLY TRAINED AND QUALIFIED PERSONNEL MAY INSTALL AND SERVICE THIS UNIT.



6” (150 mm) minimum ventilation clearance top and bottom

2” (50 mm) minimum ventilation clearance on both sides

Mount to vertical surface of 3/4” (19 mm) plywood or other material of equal strength and durability, using four 1/4” (6 mm) diameter mounting screws. For mounting in a high vibration environment, use of six fasteners is recommended.

SERVICE HOTLINE: 1.800.742.2326
1.303.678.7500

1. PREPARING FOR USE:

WARNING:
ONLY TRAINED AND QUALIFIED PERSONNEL MAY INSTALL AND SERVICE THIS UNIT.

A. INSTALLATION OF THE UNIT MUST COMPLY WITH LOCAL ELECTRICAL CODES AND OTHER APPLICABLE INSTALLATION CODES.
B. INSTALLATION MUST BE MADE ACCORDING TO THE INSTALLATION INSTRUCTIONS AND ALL APPLICABLE SAFETY REGULATIONS.

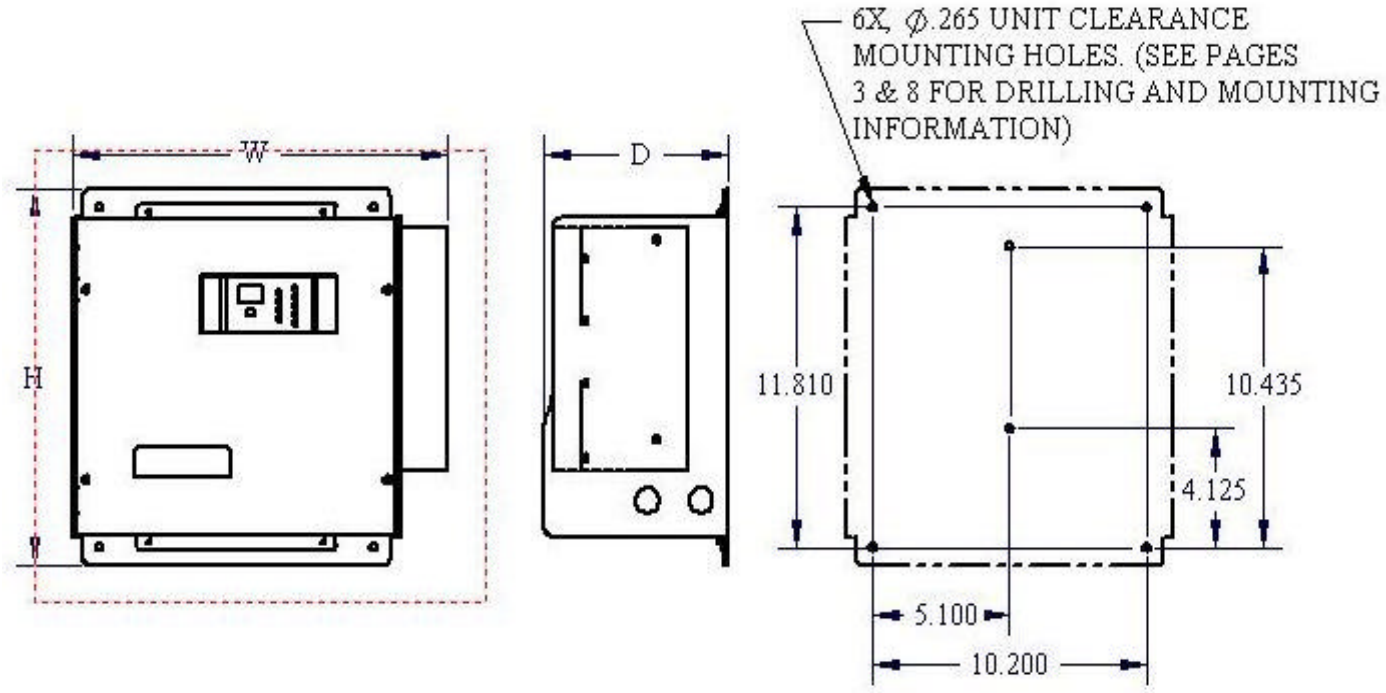

W = 13.95”
H = 13.06”
D = 6.83”

SERVICE HOTLINE: 1.800.742.2326
1.303.678.7500

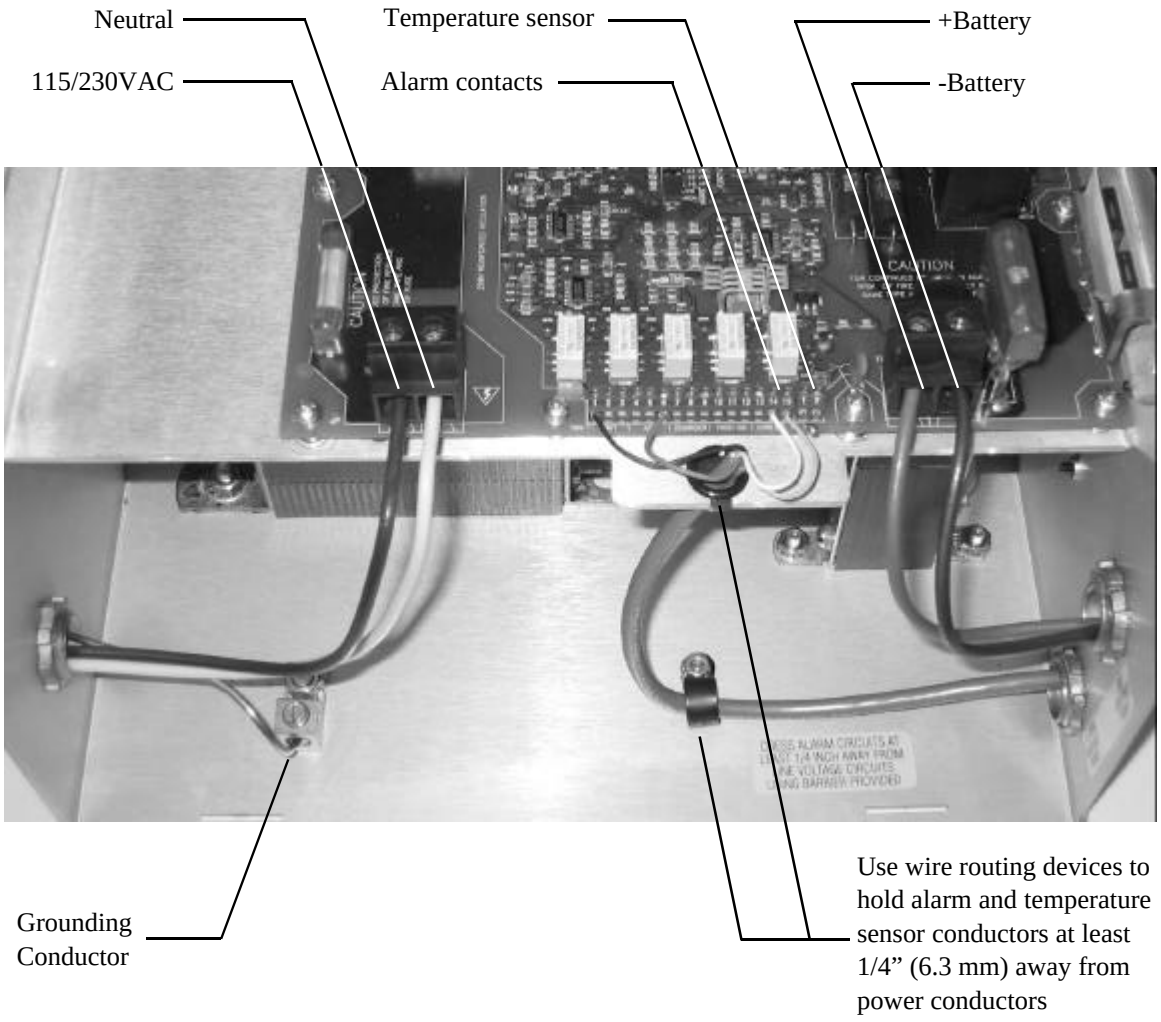

Use conductors rated 90C or higher.
Input conductors must be suitable for 15A circuits.
Battery conductors must be suitable for 40A circuits. See Section 5.
Alarm and temperature sensor may use low power conductors.

C. This unit is permanently connected to the AC circuit and to the battery. An external disconnect device with a minimum of 0.12”(3 mm) pole separation must be located in the AC input to the charger.
- Do not energize the AC supply circuit until **ALL** wiring is connected, internal controls are properly set, and the cover is secured. Always shut the AC supply circuit off before installing or removing any wiring or opening the cover for any reason.
- Always observe proper polarity of the DC output leads.
- Always connect the output leads in this order: ungrounded charger output first, then ungrounded battery terminal, then grounded charger output, and grounded battery terminal last. If the battery must be disconnected for service, remove the output wiring in the reverse of the order given above.

SERVICE HOTLINE: 1.800.742.2326
1.303.678.7500

D. Be sure battery terminals are clean and properly tightened. Be careful to keep corrosion from coming in contact with eyes.
E. Add distilled water to each cell until the electrolyte reaches the level specified by the battery manufacturer. This helps purge excess gas from the cells. Do not over fill. For a battery without cell caps, carefully follow the manufacturer's recharging instructions.
F. Study all battery manufacturer's specific precautions such as removing or not removing cell caps while charging and recommended rates of charge.
    - The recommended charge current range must include the rated output current of this charger, which is 20 amperes.
    - Set the float voltage jumper to the battery manufacturer's recommended float charge voltage. Incorrect charge voltage will accelerate generation of explosive gases, increasing the risk of fire or explosion.
G. Enable the automatic boost charge mode (equalizing charge) only if recommended by the battery manufacturer
H. Determine the voltage of the battery by referring to the engine or battery owner's manual and make sure that the 12V/24V select jumper is set to the correct voltage.

---

2. **CHARGER LOCATION**
Do not set a battery or any other object on top of the charger. This will obstruct the ventilation openings and cause excessive heating. Ensure the charger is protected from blowing or dripping water.

---

3. **GROUNDING INSTRUCTIONS**
This battery charger should be connected to a grounded, metal, permanent wiring system; or an equipment grounding conductor (earthing conductor) should be run with the circuit conductors and connected to the equipment grounding terminal in the charger. This terminal is marked with the ground symbol. Connections to the battery charger should comply with all local codes and ordinances.

---

4. **NEUTRAL CONNECTION**
The grounded circuit conductor (neutral) should be connected to the terminal marked "N" on the input terminal block, TB1.

---

5. WIRE RATINGS
A. All conductors should be rated for use at 90º C or higher.
B. All input and output conductor sizes should be coordinated with the fault protection devices: 15A on AC input (14 AWG typical), 40A on DC output (8 AWG typical), 1 A on Alarm terminal block (20 AWG typical).
C. *Before installation*, ensure adequate battery to charger wire gauge. Wire gauge that is too small may activate the open battery detector and the charger will shut down. The maximum allowed resistance seen by the charger is found in TABLE 1. These figures already include an allowance for charger variations (they are 80% of the typical trip-point) and are for the complete circuit: total of battery leads, battery's internal resistance, and any external equipment. The total resistance seen by the charger must not exceed the following values:

TABLE 1

	12V	**24V**
Maximum Resistance	36m?	71m?

SERVICE HOTLINE: 1.800.742.2326
1.303.678.7500

D. To determine the appropriate cable and length, please refer to the following table:

TABLE 2

		Maximum Charger to Battery Distance (Ft.)		Recommended Charger to Battery Distance (Ft.)	
AWG	**mW/Ft.**	**12V**	**24V**	**12V**	**24V**
8	0.63	24	48	7	15
6	0.40	38	77	12	24

The above lengths consider the resistance of the battery and cables only and do not take into account any additional interconnects.
The above lengths are for operation at 25C. For high temperature installations (40C) reduce lengths by 10%.

In the case of high resistance in the cables to the battery the charger may cycle between AC Fail and Battery Fault LEDs (approximately every 10 seconds). Cable runs exceeding the proper length for the cable gauge used most often cause this problem. The appropriate solution is to change the cable gauge to properly correspond with the necessary cable length (see TABLE 2). In some cases where the resistance is not too far above maximum, the charger may recover after some time (approximately 10 minutes) and start charging the batteries. If it is not possible to decrease the system resistance the Battery Fault feature can be disabled. Please contact SENS at 1-800-742-2326 for further information.

E. Refer to local electrical for additional requirements.
F. See Section 9 for Terminal Block wire ranges.

---

6. **MOUNTING LOCATION**
   A. See the safety instructions for important information concerning the charger location.
   B. The charger should be installed in a sheltered area, protected from rain and snow.
   C. The charger should not be located where temperatures are expected to be colder than -20º C, or hotter than +40º C for operation at rated output current.

> **WARNING:**
> **NEVER CHARGE STORAGE BATTERIES AT TEMPERATURES ABOVE OR BELOW THE LIMITS SPECIFIED BY THE BATTERY MANUFACTURER. NEVER ATTEMPT TO CHARGE A FROZEN BATTERY.**

   D. Allow sufficient room for routing the fixed wiring to the charger. AC input enters the left side; DC output and alarms exit on the right.
   E. Leave clear space for ventilation all around the unit: at least 6 inches (15 cm) at the top and bottom; at least 2 inches (5 cm) on the sides.

SERVICE HOTLINE: 1.800.742.2326
1.303.678.7500

F. Charger should be mounted on a flat vertical surface so that the chassis does not warp when tightened to the wall.
G. The charger should be mounted vertically, with the input and output terminal blocks lowermost as shown in Figure on the following page.

WARNING:
OTHER MOUNTING ORIENTATIONS INTERFERE WITH PROPER VENTILATION AND MAY CAUSE THE CHARGER TO OVERHEAT.

H. Do not mount the charger over any heat generating equipment.
I. Minimize vibrations that the charger will be subjected to.

---

7. **STATIC DISCHARGE PRECAUTIONS**

The printed circuit board contains static sensitive components. Damage can occur even when static levels are too low to produce a noticeable discharge shock. To avoid static discharge damage:

A. Handle the charger by the chassis only. Remove the cover only when access is essential for installation and service, and replace it promptly when finished.
B. If possible, wear an approved static protection strap. If one is not available, touch one hand to the chassis before contacting any other part of the charger.

---

8. **MOUNTING PROCEDURES**

WARNING:
THIS CHARGER IS INTENDED FOR COMMERCIAL AND INDUSTRIAL USE. ONLY TRAINED PERSONNEL WHO ARE QUALIFIED TO PERFORM ELECTRICAL INSTALLATIONS SHOULD INSTALL OR SERVICE THIS UNIT.

The charger mounts to a wall or other vertical support. The mounting surface must safely support the charger's weight, which is 40 pounds (18 kg), and also the weight of the fixed wiring.

*ATTENTION: FOR MOUNTING IN A HIGH VIBRATION ENVIRONMENT YOU MAY USE 6 FASTENERS AS SHOWN ON PAGE 4.

Mounting on a concrete surface:

- All mounting hardware is provided by the installer.
- Use optional ¾ in. thick, 18 in. x 24 in. sheet of marine plywood (not provided) to provide a suitable mounting surface for the charger.
- Drill four holes to secure the plywood to the wall using a minimum of four ¼ in. drive pin type expansion anchors to secure the plywood to the wall. Secure the plywood to the wall.
- Drill four (or six*) holes using the diagram on pg. 4 for ¼ (or M6) draw nut type expansion anchors through the plywood into the cement wall.
- Insert the four (or six*) draw nut type expansion anchors through the plywood into the cement wall.
- Mount charger to draw nut type expansion anchors with nuts and flat washers.

SERVICE HOTLINE: 1.800.742.2326
1.303.678.7500

Mounting on a drywall:

- Use ¾ in. thick plywood to span two vertical support members in the wall. The plywood sheet normally does not have to be more that 2 ft. by 2 ft. square.
- Place plywood to avoid electrical wiring, plumbing, etc., concealed behind wall.
- Secure the plywood to the vertical support members using ¼ in. by 2 in. lag bolts and flat washers in a minimum of four places.
- Mark four (or six*) holes on the plywood using the diagram on pg. 4. Drill pilot holes into the plywood to secure the mounting bolts.
- Mount charger using four (or six*) 1/4 in. by ½ in. (or M6) lag bolts and flat washers.

Mounting on a metal surface:

- Mount charger using four (or six*) ¼-20 by 3/4 in (or M6) hex head bolts, flat washers and split lock washers to attach the battery charger to a frame, panel or cross member in four (or six*) places. Use the diagram on pg. 4 to place the pilot holes, if needed.
- Tighten all bolts to recommended torque of 45-50 inch pounds.

---

9. **WIRING**

A. All wiring must comply with applicable codes and local ordinances. See Section 5 for recommended gauges.

B. The charger contains a DC output fuse for *internal* fault protection, but this will not protect the DC wiring from fault currents available *from the battery*. **CONSULT NATIONAL CODES AND LOCAL ORDINANCES TO DETERMINE IF ADDITIONAL BATTERY FAULT PROTECTION IS NECESSARY IN YOUR INSTALLATION.**

WARNING:
ENSURE THAT AC POWER IS DISCONNECTED AT THE CIRCUIT BREAKER OR OTHER SAFETY DISCONNECT BEFORE WIRING THE CHARGER.

C. Connect the equipment grounding conductor (earthing) to the charger's grounding terminal. This should always be the first wire connected and the last wire disconnected.

D. Connect the DC output conductors to TB3. Make the connections in the order shown in Figure 2A (negative ground) or Figure 2B (positive ground). The terminals accept 10 through 6 AWG conductors.

CAUTION:
OBSERVE POLARITY. THE POSITIVE CHARGER OUTPUT TERMINAL IS LABELED "+" AND THE NEGATIVE TERMINAL IS LABELED "-".

WARNING:
BE SURE TO ROUTE DC POWER WIRING AT LEAST ¼ INCH (6.3 MM) AWAY FROM AC WIRING, ALARM WIRING, AND THE CIRCUIT BOARD.

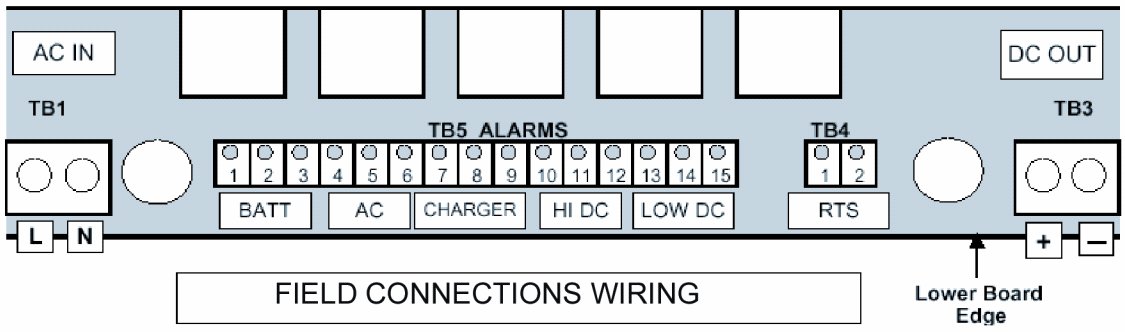

SERVICE HOTLINE: 1.800.742.2326
1.303.678.7500

FIGURE 2A

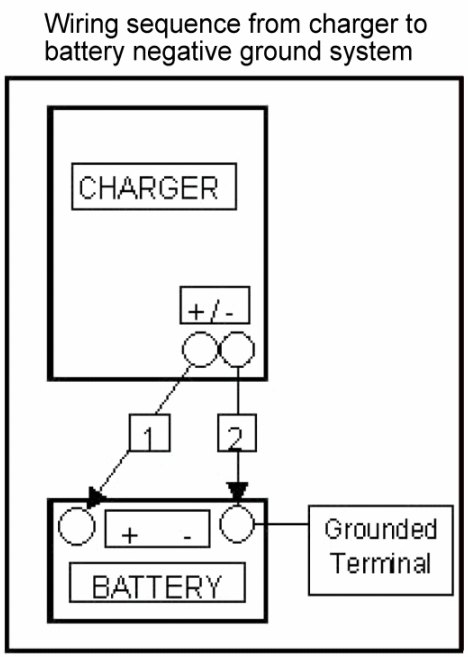

FIGURE 2B

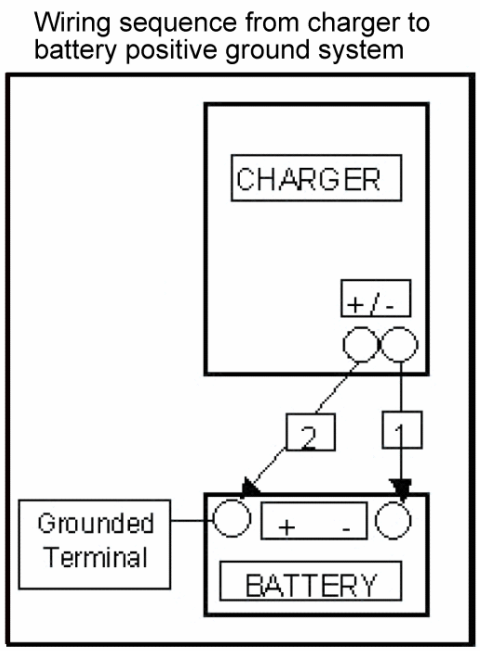

E. Connect the AC line and neutral conductors at TB1. If there is an identified grounded circuit conductor (neutral), attach it to the terminal marked N. TB1 will accept 14-6 AWG conductors.

WARNING:
BE SURE TO ROUTE ALL AC WIRING AT LEAST ¼ INCH (6 MM) AWAY FROM DC WIRING, ALARM WIRING, AND THE CIRCUIT BOARD.

F. If the optional alarms are used, connect the alarm wiring to their respective terminals on TB5. Route alarm wiring through the plastic bushing below TB5, keeping the conductors at least ¼ inch (6 mm) away from DC wiring, AC wiring, and the circuit board. The terminals accept 20-14 AWG conductors.

WARNING:
CONNECT ALARM TERMINALS ONLY TO LOW VOLTAGE, LIMITED ENERGY ("CLASS 2") CIRCUITS. ALARM CIRCUITS ARE RATED 24V, 1.0A MAXIMUM.

RELAY CONTACTS	BATTERY FAIL ALARM	AC FAIL ALARM	CHARGER FAIL ALARM	HIGH BATTERY ALARM (HI DC)	LOW BATTERY ALARM (LO DC)
COMMON	TB5-1	TB5-4	TB5-7	TB5-10	TB5-13
OPEN ON ALARM	TB5-2	TB5-5	TB5-8	TB5-11	TB5-14
CLOSE ON ALARM	TB5-3	TB5-6	TB5-9	TB5-12	TB5-15

SERVICE HOTLINE: 1.800.742.2326
1.303.678.7500

G. If the optional remote temperature sensor is used:
   - Remove the internal sensor at TB4, if it is present.
   - Locate the remote sensor where it will accurately detect the battery temperature.
   - Connect the remote sensor leads to TB4. The sensor is not polarized, so it does not matter which lead connects to terminal #1.
   - Route sensor wiring through the plastic bushing below TB5, keeping the conductors at least ¼ inch (6 mm) away from DC wiring, AC wiring, and the circuit board.

H. Verify that all connections are secure and in the proper locations. Tighten all unused screws on the terminal blocks to secure them against vibration.

I. Ensure all wires are routed so the cover will not pinch them.

---

10. INTERNAL ADJUSTMENTS

WARNING:
MAKE SURE THE AC POWER TO THE CHARGER IS SHUT OFF WHILE MAKING THE FOLLOWING ADJUSTMENTS.

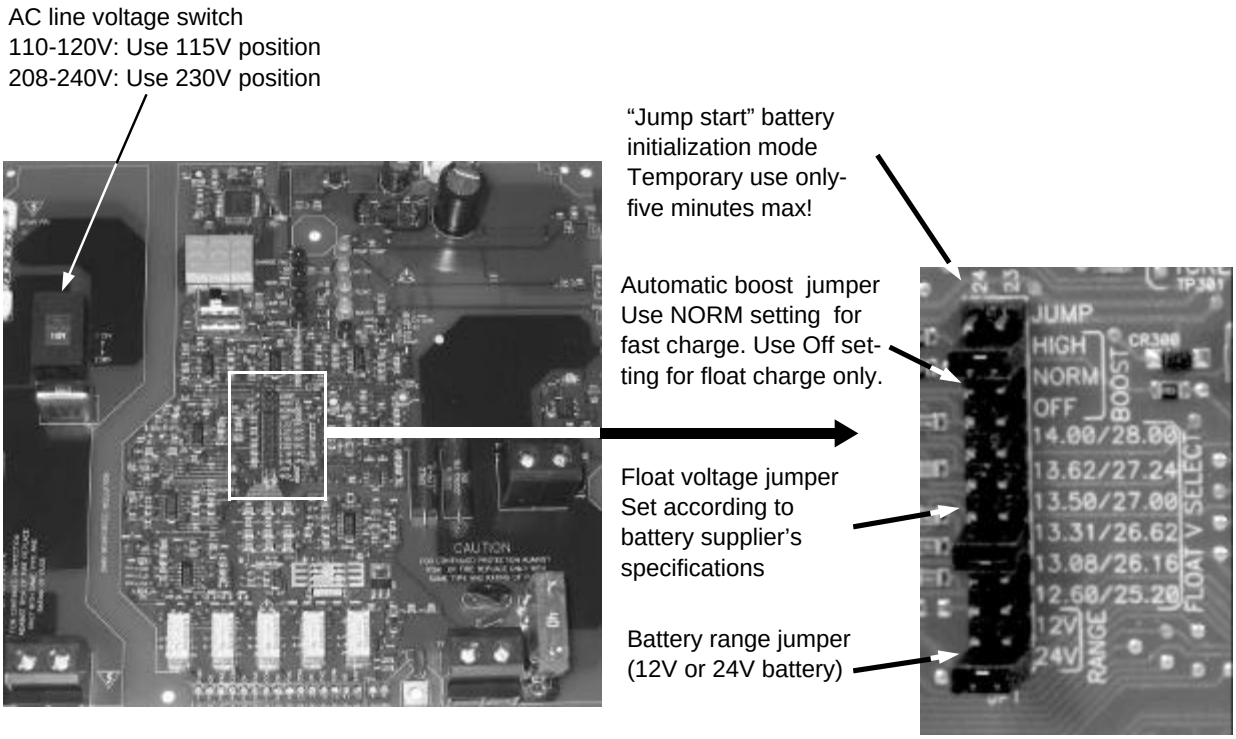

SAME FOR ALL MODELS

SERVICE HOTLINE: 1.800.742.2326
1.303.678.7500

A. Set the AC voltage select switch (SW100) according to the line voltage. Use the 115V position for nominal mains voltages between 110V and 120V. Use the 230V position for nominal mains voltages between 208V and 240V.
B. Set the battery range jumper (JP1A) according to nominal battery voltage. Use the 12V position for 12V batteries. Use the 24V position for 24V batteries.
C. Set the boost mode jumper (JP1B) according to whether the battery should have automatic boost charging. If the battery manufacturer recommends boost charging (equalization) use the NORMAL position. If not, use the OFF position.

D. Set the float voltage select jumper (JP1C) according to the battery manufacturer's recommended 25ºC float voltage. The settings are:
- 2.14.00/28.00 for 10 or 20 cell Nickel Cadmium at 1.40V/cell
- 13.62/27.24 for 6 or 12 cell (VRLA) lead-acid at 2.27V/cell, and for 19 cell Nickel Cadmium at 1.43V/cell
- 13.50/27.00 for 6 or 12 cell (VRLA or high capacity) lead-acid at 2.25V/cell, and for 19 cell Nickel Cadmium at 1.42V/cell
- 13.31/26.62 for 6 or 12 cell (flooded) lead-acid at 2.22V/cell, and for 19 cell Nickel Cadmium at 1.40V/cell
- 13.08/26.16 for 6 or 12 cell lead-acid at 2.18V/cell
- 12.60/25.20 for 9 or 18 cell Nickel Cadmium at 1.40V/cell

E. Replace the cover by sliding it straight onto the charger. Ensure the cover's locating tabs engage the slots in the chassis. Secure the cover with its four mounting screws.
F. The JUMP position allows initial charging of Nickel Cadmium batteries, or new lead acid batteries supplied from the manufacturer dry and discharged, from a zero charge state. To use this feature, *temporarily* move JP1C from the BOOST setting to the JUMP position. Operate the charger for a short time, just long enough to retain more than 1.5V for Pb and 1.0V for NiCd per cell. Then disconnect AC power, remove the cover, and place JP1C back to desired boost setting. Replace the cover as described above.

WARNING:
USE THE JUMP FEATURE ONLY WITH LIQUID ELECTROLYTE NICKEL-CADMIUM BATTERIES, OR WITH RECENTLY FILLED NEW LEAD ACID BATTERIES SUPPLIED FROM THE MANUFACTURER DRY AND DISCHARGED. FOR EXCESSIVELY DISCHARGED LEAD ACID BATTERIES THAT HAVE ALREADY BEEN IN SERVICE, CONSULT THE BATTERY MANUFACTURER TO DETERMINE IF AND HOW THEY CAN BE SAFELY RESTORED TO SERVICE.

WARNING:
NEVER LEAVE A JUMPER IN THE JUMP POSITION DURING NORMAL OPERATION. THIS DISABLES THE BATTERY VOLTAGE INTERLOCK, WHICH INCREASES THE RISK OF ACCIDENTALLY OVERCHARGING 12V BATTERIES WITH THE 24V SETTINGS.

SERVICE HOTLINE: 1.800.742.2326
1.303.678.7500

11. **CHECK OUT**

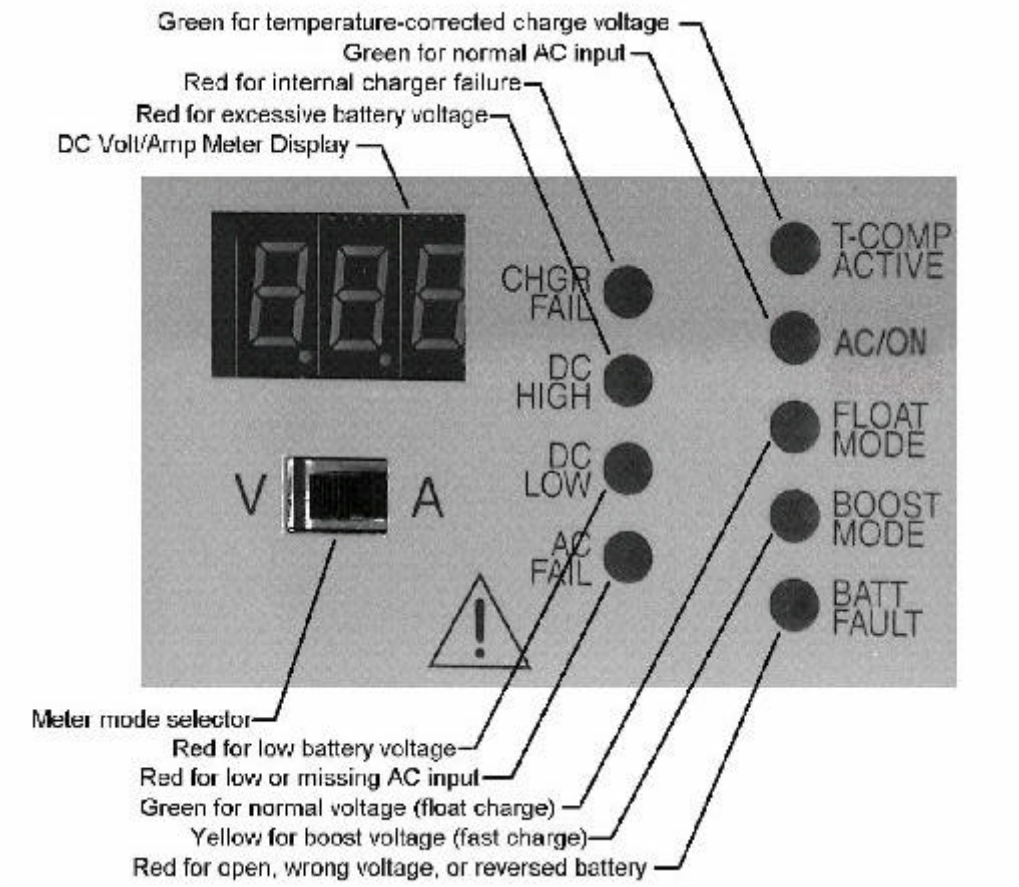

See OPERATOR INSTRUCTION section for LED indicator definitions:

A. Verify the status LEDs:
- **AC FAIL** should be **ON**. If not, the DC output may be open or reversed, or the battery may be extremely discharged.
- **BATT FAULT** should be **OFF**. If it lights, check for reversed polarity of the DC wiring.
- The **DC LOW** (Low Battery) LED may be either on or off, depending on the battery's state of charge.
- All other LEDs and the meter display should be off.
- If the **DC HIGH** LED is on, check battery voltage jumper setting.

B. Select the voltmeter function by sliding the meter switch to the "V" position.

C. Apply AC power by closing the branch circuit breaker and any other disconnect devices.

D. The meter display should light immediately after power on and display the battery voltage. The green **AC /ON** LED should be lighted. If a temperature sensor is present, either internal or remote, the green **T-COMP** (Temperature Compensation) LED should be lighted.

E. If the **BATT FAULT** LED lights when AC is applied, this indicates that the battery voltage does not agree with the **Range** jumper setting. The charger is interlocked, and will not operate in this condition. Disconnect AC power, then correct the jumper setting or battery voltage before proceeding.

F. After a short delay (typically 10 seconds or less), the charger will produce output. The voltmeter reading should increase, indicating the battery is being charged.

G. Change the meter switch to the "A" position to read output current.
- Current should be close to 20A if the battery requires recharging. If automatic boost is enabled, the **BOOST MODE** LED may light, in which case the battery will be charged until it reaches 106% of the float voltage. If boost is disabled, the green **FLOAT MODE** LED should be on and the battery will charge until it reaches the float voltage setting.
- Output current will be low if the battery is fully charged, possibly too low to read on the meter. This is normal, provided the correct charging voltage is present. The green **FLOAT MODE** LED should light when output current is below approximately 18A.

SERVICE HOTLINE: 1.800.742.2326
1.303.678.7500

OPERATOR INSTRUCTIONS

WARNING:
NO OPERATOR SERVICEABLE PARTS INSIDE.
DO NOT OPEN.
COVER MUST BE IN PLACE DURING USE.
USE THIS CHARGER FOR CHARGING LEAD-ACID OR NICKEL-CADMIUM BATTERIES ONLY.

A. ADVANCED DESIGN FEATURES

Battery Friendly:

- Float and boost voltage selectable at install per specific battery vendor recommendations.
- Remote temperature compensation for most accurate float and boost voltage control.
- Able to charge a dead battery.
- Float and Boost voltage electronically controlled with a 4-rate fast charge program. See chart below.

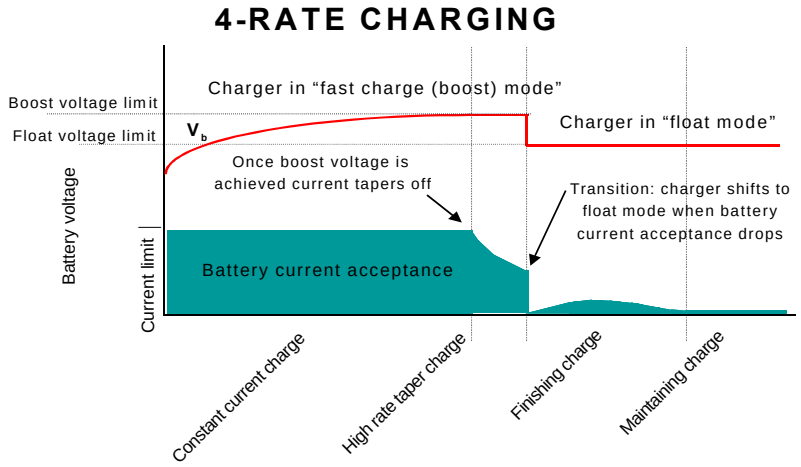

Temperature Compensation:

- The battery charger is temperature compensated to match the negative temperature coefficient of the battery. Thus, the output voltage will increase slightly as the temperature decreases and decrease as temperature increases.
- The output voltage is clamped at 0 and +40 Degrees C to protect against extremely high or low output voltage. See chart below.

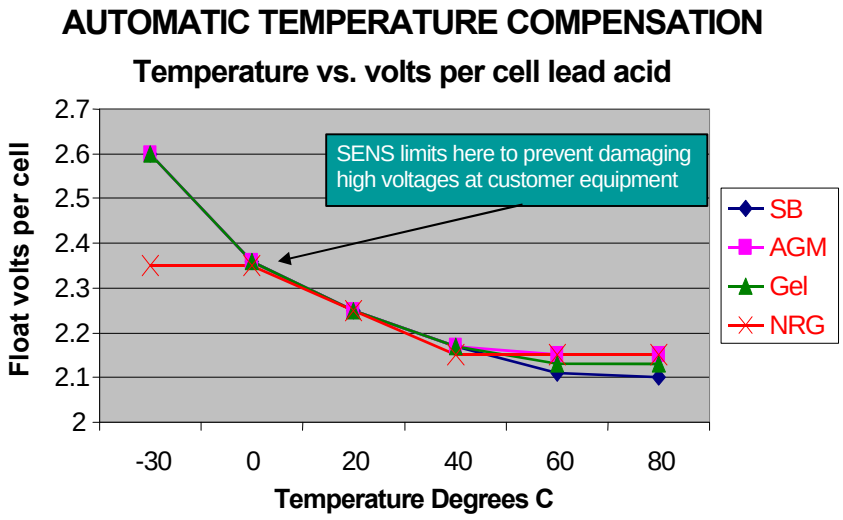

SERVICE HOTLINE: 1.800.742.2326
1.303.678.7500

Fault Tolerant: The charger is protected from the following faults:

- Reverse battery connection.
- Powering up into a shorted battery.
- Powering up with the wrong voltage setting (24V charger with 12V battery)
- Powering up into an open battery (Battery not connected).
- Internal power component failures.
- Over heating (over temperature output power reduction).
- Protected against power line transients and surges.

Robust Hardened Construction:

- Shock and Vibration tested to UL 991, 2G.
- Shock and Vibration tested to UL 991, 5G option available.
- Lightning transient immunity to ANSI/IEEE C62.41 Cat. B and EN 50082-2 heavy industrial.
- Wide operating temperature range: -20 to + 40 Degrees C. Charger will operate at reduced output current rating up to +60 Degrees C.
- Conformal coated printed wiring boards for erosion protection.

Worldwide Agency Approvals:

- UL listed, UL 1236.
- CUL listed to CSA C22.2 107.2- M89.
- CE marked for EMC directive (industrial environment) and EN 60335-2-29.
- Worldwide operating voltage and frequency ranges.

B. FRONT PANEL LED INDICATOR DEFINITIONS AND TROUBLE SHOOTING:

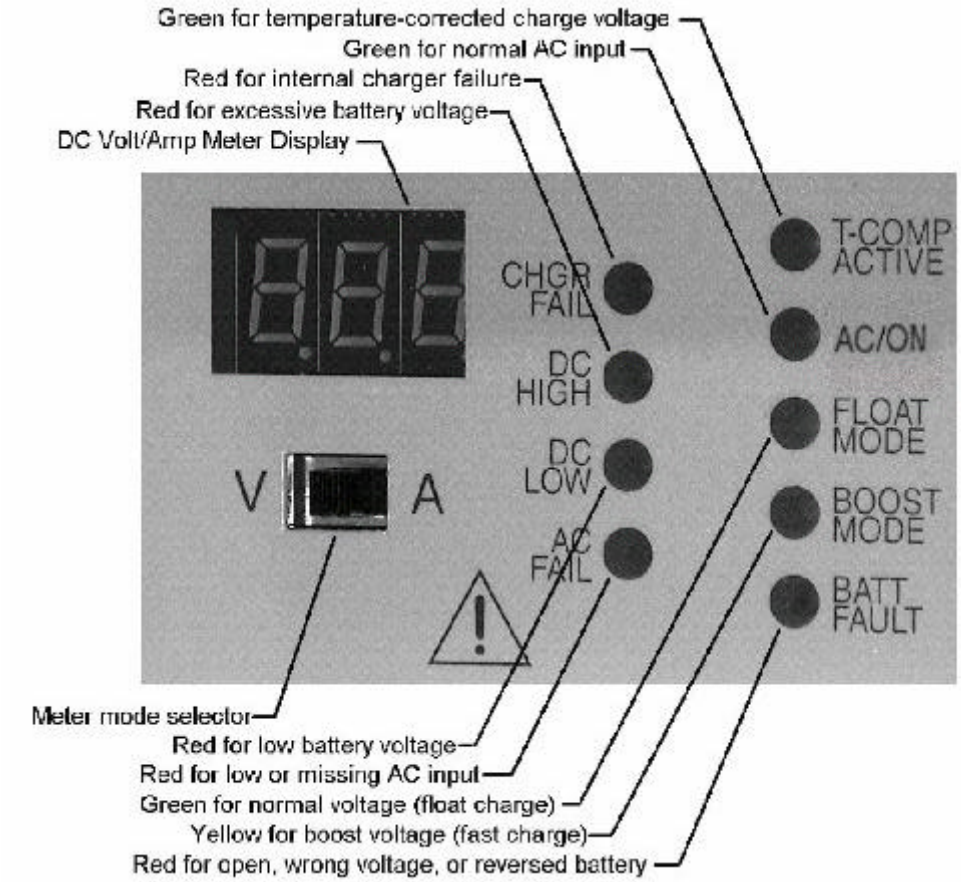

SERVICE HOTLINE: 1.800.742.2326
1.303.678.7500

ITEM	TEXT	LED	Meaning	Troubleshooting
1	CHGR FAIL	RED	Charger Fail	Charger unable to provide charging current to battery. Replace unit. AC input voltage is too low to supply proper current when load is applied. Control board is damaged and should be replaced.
2	DC HIGH	RED	Battery DC Voltage High	Check that the battery range voltage jumper setting agrees with battery used. High battery alarm voltage is 17v for 12v system and 34v for 24v system.
3	DC LOW	RED	Battery DC Voltage Low	Check that battery range voltage jumper setting agrees with battery used. Check for defective battery. Check DC load. Low battery alarm voltage is 12v for 12v System and 24v for 24v system
4	AC FAIL	RED	Input AC Missing	Check AC input voltage to charger. Have qualified installer check AC line voltage switch setting. Setting must agree with AC voltage at site. Check AC fuse.
5	T-COMP	GREEN	On if Temperature Compensation Working, Off if Temperature Compensation Option not used.	Confirm if temperature compensation is intended to be used. Only one sensor (Local or remote) should be connected.
6	AC/ ON	GREEN	AC input good	Should be on in normal use. If LED is OFF, AC FAIL should be ON.
7	FLOAT MODE	GREEN	Charger Output in Float Mode	If the automatic boost jumper is in the OFF location, this LED will always be on. If the automatic boost jumper is in the “NORM” location, this LED will come on after the battery is nearly charged up and will stay on.
8	BOOST MODE	AMBER	Charger Output in Boost Mode	This LED will not be on if the automatic boost jumper is in the OFF location, or if the automatic boost jumper is in the “NORM” location and the battery is nearly fully charged up.
9	BATT FAULT	RED	Battery Fault-Charger automatically disabled:	• Battery reversed. • High resistance in charger leads (leads too small, too long , poorly connected, open). See Section 5 for information on wire length and gauge. • Battery internal open circuit. • Battery voltage does not match charger voltage range

SERVICE HOTLINE: 1.800.742.2326
1.303.678.7500

NORMAL SET UP:

1. Elect the voltmeter function by sliding the meter switch to the “V” position.
2. Apply AC power by closing the branch circuit breaker and any other disconnect devices.
3. The meter display should light immediately after power on and display the battery voltage. The green **AC/ ON** LED should be lighted. If a temperature sensor is present, either internal or remote, the green **T-COMP** (Temperature Compensation) LED should be lighted.
4. After a short delay (typically 10 seconds or less), the charger will produce output. The voltmeter reading should increase, indicating the battery is being charged.
5. Change the meter switch to the “A” position to read output current.
   - Current should be close to 20A if the battery requires recharging. If automatic boost is enabled, the **BOOST MODE** LED may light, in which case the battery will be charged until it reaches 106% of the float voltage. If boost is disabled, the green **FLOAT MODE** LED should be on and the battery will charge until it reaches the float voltage setting.
   - Output current will be low if the battery is fully charged, possibly too low to read on the meter. This is normal, provided the correct charging voltage is present. The green **FLOAT MODE** LED should light up when output current is below approximately 18A.

C. ALARM DESCRIPTION, FIVE ALARM MODEL:

RELAY CONTACTS	BATTERY FAULT ALARM	AC FAIL ALARM	CHARGER FAIL ALARM	HIGH BATTERY ALARM (HI DC)	LOW BATTERY ALARM (LO DC)
COMMON	TB5-1 COM	TB5-4 COM	TB5-7 COM	TB5-10 COM	TB5-13 COM
OPEN ON ALARM	TB5-2 OK	TB5-5 OK	TB5-8 OK	TB5-11 OK	TB5-14 OK
CLOSE ON ALARM	TB5-3 FAIL Defaults to OK with no AC input	TB5-6 FAIL Defaults to Fail with no AC input	TB5-9 FAIL Defaults to OK with no AC input	TB5-12 FAIL Defaults to OK with no battery	TB5-15 FAIL Defaults to fail with no battery

SERVICE HOTLINE: 1.800.742.2326
1.303.678.7500

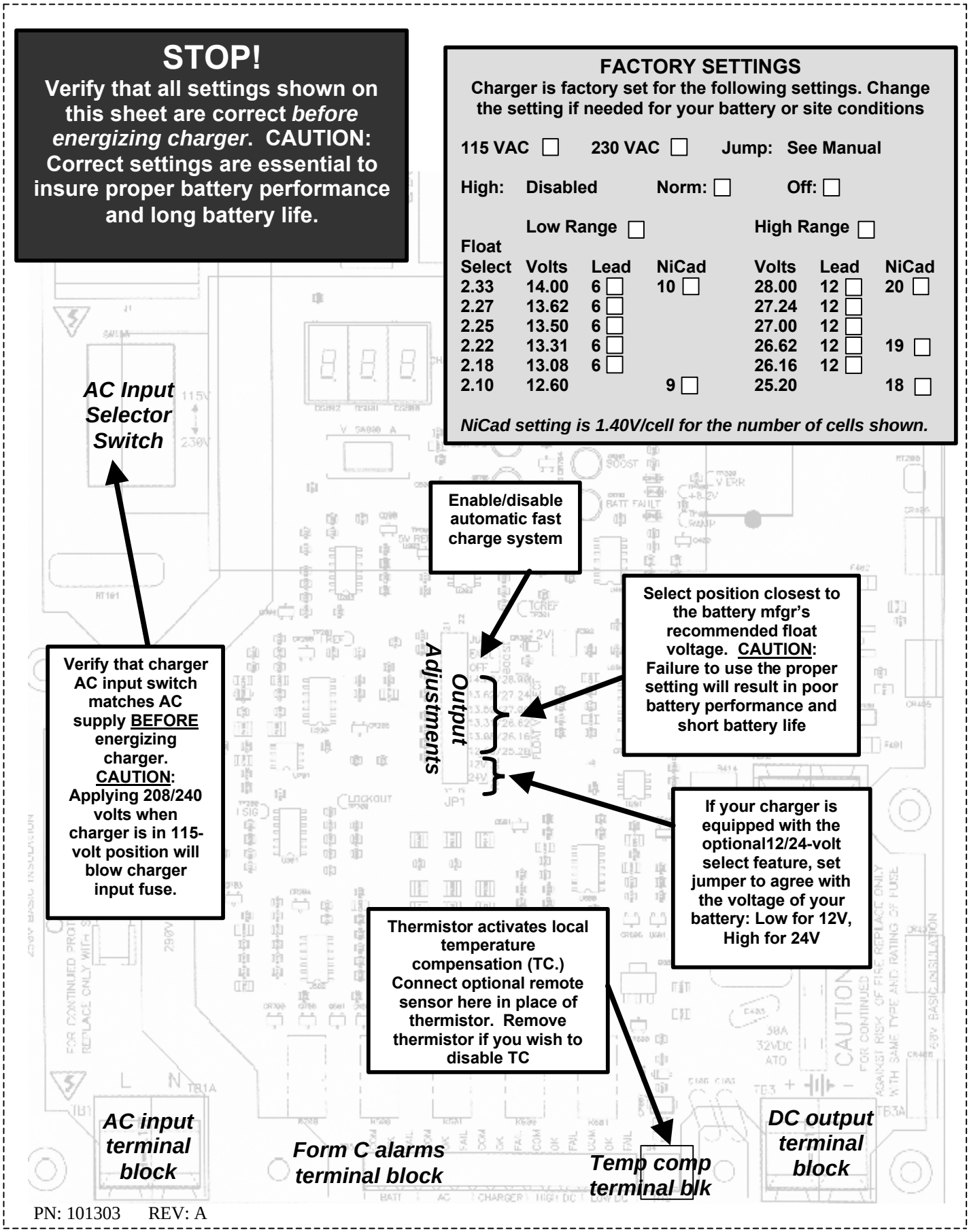

PN: 101303 REV: A

Katolight

POWER PLANTS

INSTRUCTION AND PARTS BOOK

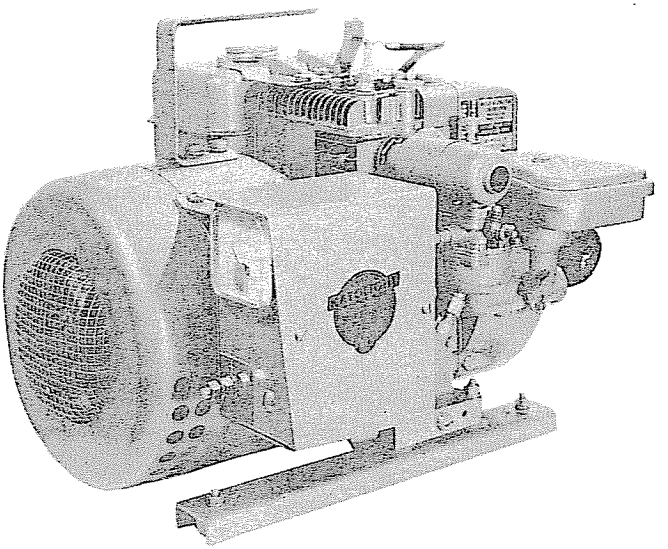

BATTERY CHARGER

KATOLIGHT MODEL - 05BB65

500 WATT - 14 VOLT DC

Contract No. – DA-11-184-AMC-652(T)
Purchase Order No. – 88-AF-51218-CH

Katolight Corporation

MANKATO, MINNESOTA

YOUR KATOLIGHT POWER PLANT

Guaranteed Insurance Against Power Failure

All Katolight DC Power Plants are manufactured to high standards of precision. Parts that require machining, grinding, or milling are made to even closer tolerances than required for good engineering, because we insist on a superior product.

Every phase of the manufacturing process is in the hands of skilled, specially trained electrical and mechanical workmen who build both high quality and long life into Katolight products.

Every model is precision engineered for maximum compactness and light weight to give a minimum of maintenance combined with the finest performance at lowest initial and operating costs.

Katolight generators are driven by such nationally known commercial engines as Briggs & Stratton, Wisconsin, Continental, Waukesha, General Motors, Cummins, and International, as well as other makes which have authorized service centers throughout the United States. These engines are familiar to the average mechanic making it unnecessary to depend upon the factory for maintenance and service.

All plants are shipped complete, ready for operation, with the addition of gasoline, oil and water in case of liquid-cooled units.

You are assured of DC power anywhere, anytime with a Katolight DC power plant, manufactured in a size to meet every individual requirement.

INSTRUCTIONS FOR ORDERING REPAIR PARTS

For parts or service, contact the distributor from whom you purchased this equipment or refer directly to Katolight Corporation.

To avoid errors or delay in filling your parts order, please furnish all information requested.

REFER TO THE NAMEPLATE ON YOUR PLANT.

1. Always give the MODEL & TYPE NO. and SERIAL NO.

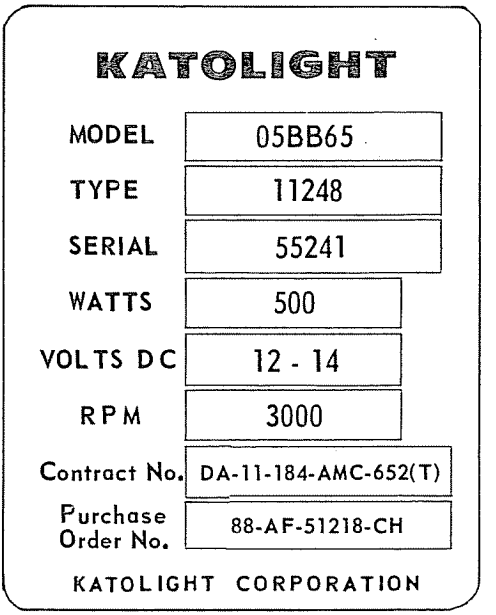

2. Do not order by reference number or group number, use part number and description.

3. Give the part number, description and quantity needed of each item. If an old part cannot be identified, return the part prepaid to your distributor or Katolight Corp. Print your name and address plainly on the package. Write a letter to the same address stating the reason for returning the part.

4. State definite shipping instructions.

Any claim for loss or damage to your unit in transit should be filed promptly against the transportation company making the delivery. Shipments are complete unless the packing list indicates items are back ordered.

"Prices are purposely omitted from this Parts Catalog due to the confusion resulting from fluctuating costs, import duties, sales taxes, exchange rates, etc.

For Current parts prices, consult your Katolight Distributor or Katolight Corporation, Mankato, Minnesota.

CONTENTS

	Page
Instructions For Ordering	1
Generator Warranty	3
Initial Precautions After Receiving Power Plant	4
Cooling Air Supply	4
Precautions Prior To Starting	4
Starting Procedure	5
Disassembly and Assembly Procedures	5
Bearing Replacement	6
Commutator Care And Maintenance	6
Replacing Brushes	8
Brush Holder Adjustments	9
Charging Regulation	9
Insulation Breakdown and Moisture Accumulation	10
Restoring Residual Magnetism	10
Wiring Diagram	11
Parts Drawing	12
Parts List	13
Trouble Shooting Procedures	14
Operating and Maintenance Instructions (Engine)	19
Section I, Before Starting	20
Section II, Starting	21
Stopping	22
Section III, Regular Maintenance	23
Section IV, Adjustments	24
General Information	26
Engine Warranty	27
Engine Warranty Instructions	28
Illustrated Parts List (Engine)	29

The purpose of this manual is to provide information for the operation and maintenance of this system. To save time and expense, in case of trouble, it is urged that operators search this manual for helpful suggestions before requesting factory assistance.

The equipment should be kept in good repair and adjustment at all times. All air circulating passages should be kept free of dust and lint. Good housekeeping pays dividends.

The operators are urged to be alert at all times. Careful, intelligent operation is the best guarantee of safe operation.

Read both generator and engine instructions throughly prior to placing the unit in operation. When ordering spares or replacement parts, compare the nameplate data of your power plant with the corresponding parts list in this book.

-- WARRANTY --

This generator is warranted to produce its rated output as stamped on the nameplate when installed and operated in accordance with instructions.

It is warranted to be in good condition electrically and mechanically when leaving the factory.

It is warranted against electrical or mechanical defects in workmanship for a period of one year after shipment from the factory. Any parts found to be defective by factory inspectors after return to the factory, transportation charges prepaid, will be replaced or repaired free of charge. This does not include any component part or standard accessory such as meters, engines, relays, etc., made by other manufacturers, as these are subject to the warranties of those manufacturers.

RECEIVING POWER PLANT AND INITIAL PRECAUTIONS

This machine has been carefully tested and packed before leaving the factory. When unpacking, it should be thoroughly inspected to see if damage has occurred in transit and to make certain that all parts, accessories, etc., are in proper condition and position. If damage is noted or material missing, notify the transportation company immediately and file a claim.

The windings and other internal components should be protected from damage when unpacking and handling. Under no circumstances should lifting hooks be attached to ventilating holes in the endbells as there is a possibility of damaging the internal parts.

All instructions and drawings contained in both this booklet and the engine manuel should be studied thoroughly prior to putting the unit in operation. Before any type of maintenance or adjustment is performed the machine should be shut down.

PROVIDE FUSE PROTECTION: Generator should be protected by fuses, fustats or fusetrons in accordance with the National Electrical Code and pertinent state codes. Engine governor should be checked periodically and adjusted according to engine manual.

OBSERVE NAMEPLATE RATING: To avoid overheating and insulation breakdown, care should be taken that generator is not overloaded. Although generators are conservatively rated, the load should not exceed nameplate rating except for short periods of time.

COOLING AIR SUPPLY

The successful operation of any electrical machine depends largely on its being installed under conditions that are favorable to its economical and efficient operation. A plentiful supply of clean, cool, fresh, dry air is necessary, with sufficient space on all sides of the machine to permit air to circulate freely. The power plant should be protected from moisture, escaping steam, dripping pipes, oil, acid, alcohol, chlorine or other corrosive gasses. Make certain that the ventilation holes in the generator frame are clean and free from foreign matter. Both engine and generator will heat if these percausions are not followed.

PRECAUTIONS PRIOR TO STARTING

1. Before starting, remove the spark plug wires, ground them to the frame and rotate the armature to see that it turns freely.
2. Check brushes to see that they are seated firmly on the commutator and that they move freely in their holders.
3. Check the engine in accordance with the engine manual.
4. Make certain that generator and engine are securely bolted to base rails.
5. Add fuel in tank - oil in reservior.

Katolight Service - Master Repair Manual - Page 2448

STARTING PROCEDURE

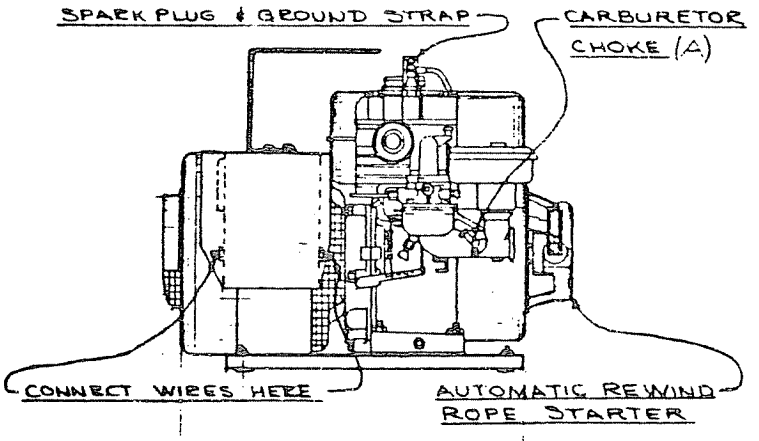

Open the gasoline shut off valve in fuel filter by turning the valve in a counter clock-wise direction. Completely close the carburetor choke (A) by moving the choke adjustment lever in a clockwise direction. Pull the rewind starter rope with a quick, steady pull to spin the fly wheel with choke fully closed to prime the engine. Then choke about ⅛ turn and repeat the operation. As the engine warms up, gradually open the choke valve.

TO STOP

To stop the plant equipped with a Briggs & Stratton engine, bring the ground strap into contact with the spark plug.

DISASSEMBLY AND ASSEMBLY PROCEDURES

(For Item Number Refer to Drawing 106-00018)

a. Disconnect electrical connections at outlet box.

b. Remove "snap on" cover (15) from endbell.

c. Disconnect all leads at brush holder ring. Raise end of arm (6) to release tension on brush (7) and raise or remove brush from brush holder assembly.

d. Loosen brush holder ring assembly (2) from endbell by removing screws, lock washers and clips. (This assembly will hang loose on armature).

e. Remove endbell (1) from frame and adaptor combination (11).

f. Remove bearing (16). Bearing is press fit on shaft and should be removed with a mechanical puller to avoid damage to bearing or shaft.

g. Remove retaining bolt (18) and washer (17) which secure armature assembly to engine shaft.

h. If it is necessary to remove fan (19) or brush ring assembly (2), remove in the following order: bearing (16), fan (19), and brush holder ring assembly (2).

i. Pull armature assembly (9) from engine shaft.

j. Remove frame and adaptor assembly (11) by removing four bolts and washers which secure frame to engine housing.

k. Remove poles (12) and coils (14) from frame by removing pole mounting bolts on outside of frame.

TO REASSEMBLE – Reverse order of disassembly.

Reseat the brushes on the commutator and align properly. Rotate the armature to see that it is working freely. Start the engine and operate briefly before replacing cover bands.

BEARING REPLACEMENT

The bearings used in this generator are of the factory lubricated, grease sealed type and require no regreasing. The average bearing life is approximately 4,000 running hours.

When removing the bearing, pull it straight off the shaft, taking care not to tip the bearing which might scar the shaft.

If spare parts are available in sufficient quantity, discard bearing and install new one during reassembly.

When fitting the new bearing, make certain that it is concentric with the shaft. Using a rubber, fiber or leather hammer, tap the inner race of bearing so it will slid into position on the shaft.

COMMUTATOR CARE AND MAINTENANCE

Very often commutators are remachined unnecessarily. Before attempting to remove the armature to remachine and undercut the commutator make certain that all necessary tests have been made to determine any other possible cause of voltage flucuations or other output deviations.

In many instances, replacing brushes and cleaning both brush holders and commutator will remedy DC generator difficulties. Although brush sparking may have caused small pits or black spots on the commutator surface there is usually not enough damage to cause poor commutation providing brushes are seated, holders cleaned, and commutator surface sanded properly.

When new brushes have been installed and sanded according to instructions, they should then be lifted in their holders and the commutator sanded. This can be done with a wood block covered with 00 sandpaper, commutator stone or burnisher. The latter are inexpensive items which can be ordered from the factory.

When resanding the commutator, hold the wood block or stone firmly and apply a small amount of even pressure. If the commutator is wider than the stone or block,

move it back and forth vertically with firm even movements. In most cases, these repairs will restore the commutator for normal operation over long periods of time.

If the commutator is badly pitted or out of round and it is necessary to machine it, a competent machinist should be employed.

When the machining of the commutator has been completed, their outer surface should be checked with a dial indicator as shown at A. Tolerance should be kept within 5/1000 of an inch.

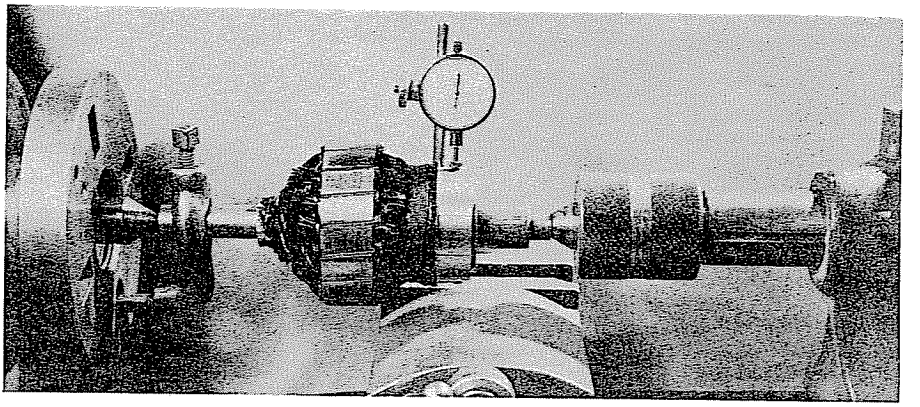

A

When the machining has been accomplished, it is necessary to undercut the mica segments.

When a square undercutting tool is used it should be slightly wider than the mica and well centered so that a mica fin as shown at E is not left.

Rough edges as shown at F should be removed by beveling as shown at G.

When a "V" undercutting tool or a three cornered file is used, the tool should be slightly wider than the mica so as to get the bevel required as shown at H.

If the undercutting is not deep enough to make a bevel on the bars as shown at I, mica fins will be left.

The tool should be well centered on the mica in order to avoid the mica fin as shown at J.

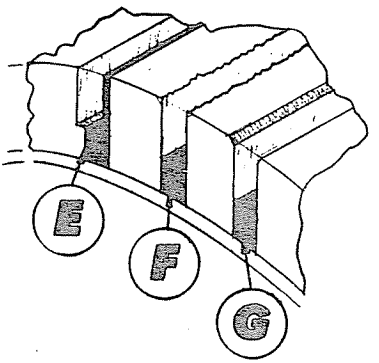

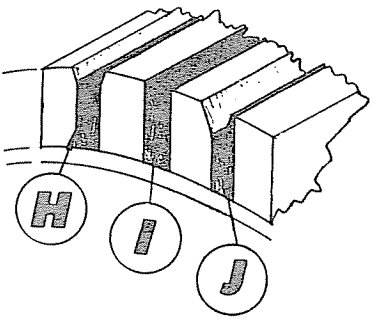

REPLACING BRUSHES

All replacement brushes should be of the same grade, preferably of the same kind and type as originally supplied with the generator. To make certain the correct brushes are used, it is best to order them from the factory, giving generator model and type numbers as well as the part number of the brushes as listed on the parts list. It is wise to have an extra set of brushes on hand at all times.

When installing new brushes, insert them only part way into the holders so that the brush tension arm will rest against the side of the brushes and prevent them from contacting the commutator. The new brushes are now in a position to begin the fitting operation.

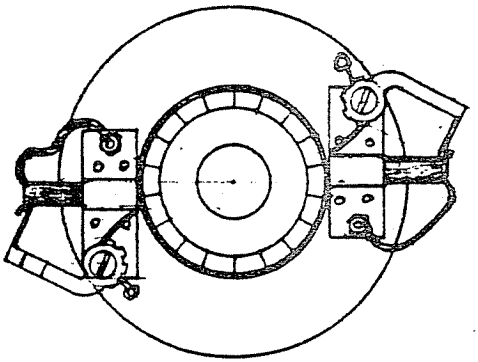

Drawing A

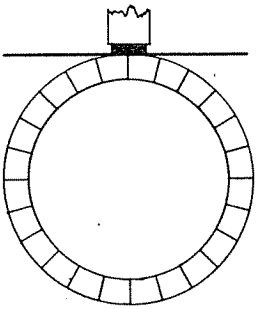

Drawing B

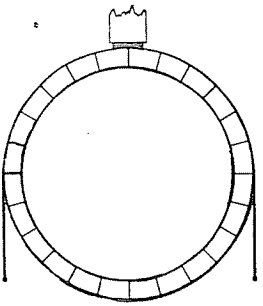

Drawing C

Brushes can be raised and locked in position away from the commutator or slip rings as shown in Drawing A.

A fine grade of sand paper can be wrapped around the commutator or slip rings and taped with the sand side toward the brushes. Then release the brushes against the sandpaper and rotate the sandpaper in the direction of operating rotation. Do not draw sandpaper across one brush at a time in a straight motion as shown at B.

The sandpaper should conform to the curvature of the commutator as shown at C.

BRUSH HOLDER ADJUSTMENTS

The DC commutator brush holders of this generator are mounted on a ring which fits into a machined recess in the endbell and is secured with clamps.

The brush holder ring has been set at the factory in the correct position to permit the commutator brushes to ride at the electrical neutral plane of the commutator for best commutation. This position has been marked on both the endbell and the ring. If the brush ring assembly is removed, make certain that it is replaced in the position marked.

Spring pressure should be no greater than is needed to keep the brushes in constant contact with commutator surface, approximately 2½ pounds per square inch.

Although there are provisions for brush spring tension adjustment on the holders, the tension should be increased only when absolutely necessary. The brush springs will retain their tension throughout the life of several sets of brushes providing that the tension is not destroyed by improper handling. Excessive heat will also destroy the tension of the steel wire.

Brush springs are inexpensive and replacements should be kept on hand.

The drawing shows the notches (A) in the brush holders which permits adjusting the spring tension.

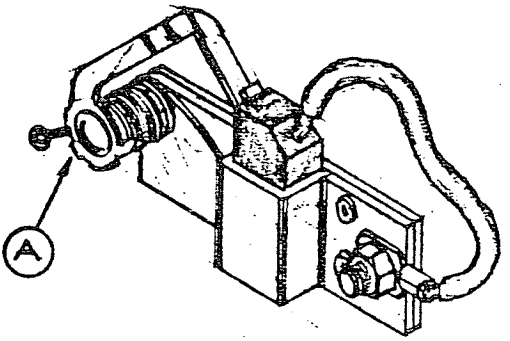

CHARGING REGULATION

The output of this generator has been checked and adjusted during the testing period prior to shipment from the factory and will not require adjustment if operated in accordance with instructions.

A shunt field resistor (variable type) of approximately 2 ohm, 25 watt may be placed between the field coil (A) and the DC commutator brush holder (B).

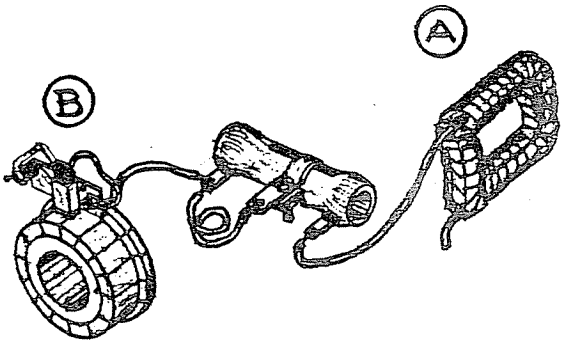

If the variable resistor is used, the charge rate of the unit may be set at the desired rate by adjusting the resistor. Adding resistance reduces the charge rate.

The charge rate may also be controlled by varying the engine speed. An increase in speed increases the charge rate.

When adjusting charge rate, do not exceed the name plate rating of the unit.

See the engine manual for governor adjustment procedure.

This adjustment should be made with an average load on the generator.

INSULATION BREAKDOWN AND MOISTURE ACCUMULATION

If the generator has been subjected to extreme heat, moisture or other conditions which cause insulation breakdown and generator output voltage flucuates, a competent electrican shouldbe employed to test for insulation resistance with a megger.

A megger is a small hand operated generator which can be attached to any coil or lead wire and frame. A low megger reading indicates a ground of low resistance due to insulation breakdown. Testing each coil with a megger will reveal the location of the short circuit. If the winding cannot be repaired, the factory should be contacted as replacement of coils or rewinding may be necessary.

RESTORING RESIDUAL MAGNETISM

If a generator is not operated for a long period of time, the residual magnetism in the field poles may become so weak that current will not be produced when the generator operates. The residual may also be neutralized if the generator is temporarily overloaded.

To restore the small amount of residual magnetism necessary to begin the field pole buildup, connect a 6 or 12 volt DC storage battery into the shunt field circuit, making certain that the battery is in series with the shunt field. This can be accomplished easily by first raising the DC commutator brushes to take the armature out of the circuit, eliminating unnecessary heavy current drain through the armature, and then connecting the battery positive and negative terminals to opposite brushes.

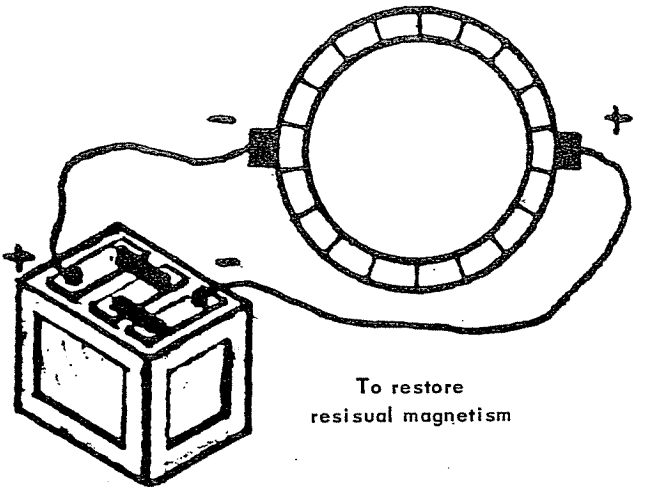

To restore
resisual magnetism

WIRING DIAGRAM

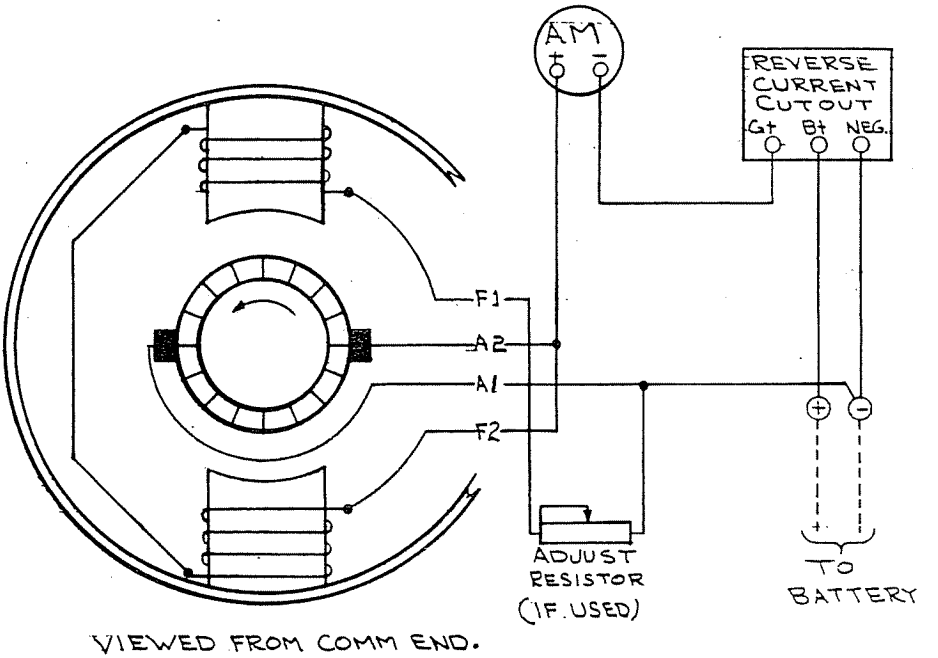

VIEWED FROM COMM END.

PARTS DRAWING

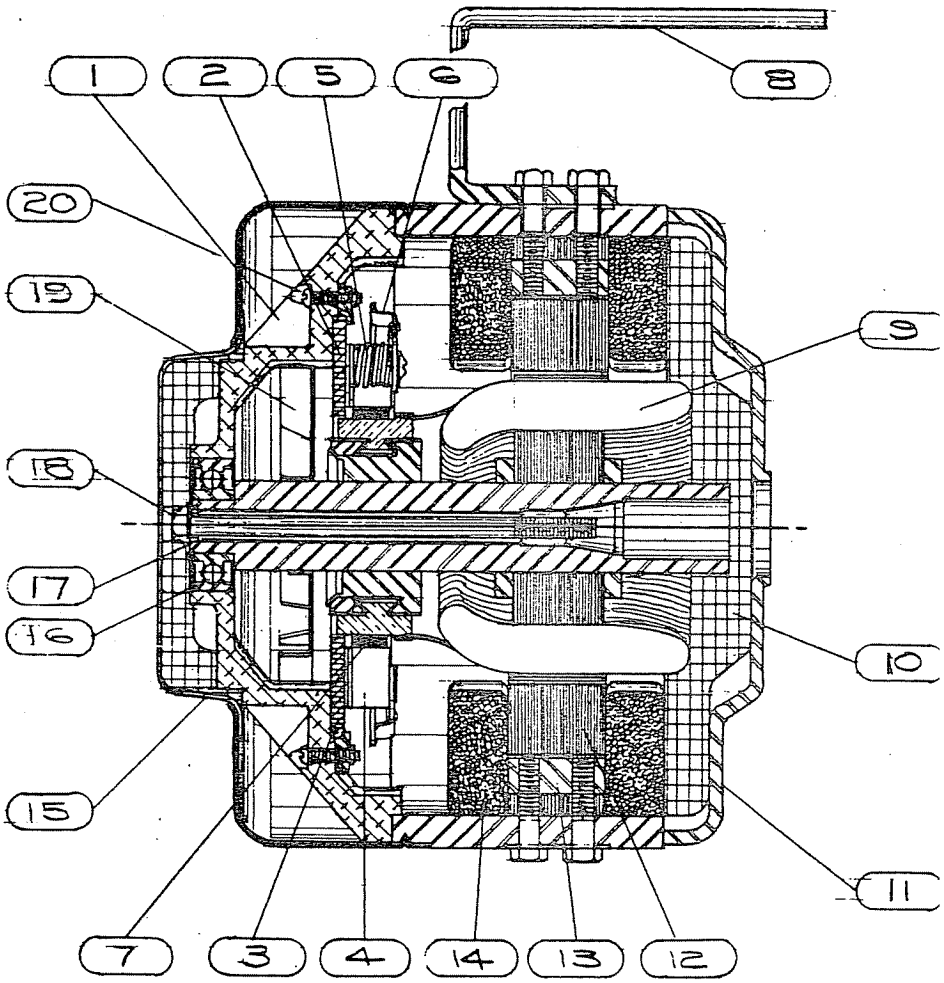

PARTS LIST

GENERATOR MODEL 05BB65

TYPE NO. 11248

PARTS DWG. 106-00018

NOTE: When placing an order for parts, always specify model and type numbers.

KEY NO.	PART NO.	COMPONENT	NO. REQ.
1	004-80039	ENDBELL	1
2	045-00052	BRUSH HOLDER RING ASSEMBLY	1
3	046-06031-18	RING	1
4	047-00035	BRUSH HOLDER (Less Brush)	2
5	048-80021	SPRING	2
6	048-40011	TENSION ARM	2
7	050-12081-11	BRUSH	2
8	150-90006	CARRYING HANDLE	1
9	080-00091	ARMATURE ASSEMBLY	1
10	008-00002	SCREEN	2
11	001-80088	FRAME & ADAPTOR	1
12	024-00131-37	POLE	2
13	023-40016	POLE BAR	2
14	087-00087	COIL	2
15	009-00054	COVER	1
16	012-41042-01	BEARING	1
17	406-07251-02	WASHER	1
18	401-01255-62	RETAINING BOLT	1
19	017-00038	FAN	1
20	052-00001	BRUSH HOLDER RING MTG. CLIP	2
Not Shown	034-90007	OUTLET BOX & COVER	1
Not Shown	551-31205-12	AMMETER	1
Not Shown	505-89210-14	REVERSE CURRENT CUTOUT	1
Not Shown	069-90002	BASE RAIL	2
Not Shown	868-31057-30	CONDENSERS	2

TROUBLE SHOOTING PROCEDURES

ENGINE DRIVEN DC BATTERY CHARGER

Full load field current ±3.5 DCI

Full load charging current ±35.8

Rated voltage 12-14

Field coil resistance 3.52 Ohm @ 25° C

RPM 2400 to 3000 RPM

After a generator has been in service for a long period, or if regular maintenance and checking are neglected, repairs and replacement of component parts may be necessary. Troubles that may occur are listed in the following pages, together with the probable causes and remedies for each.

VOLTAGE DEVIATIONS

NO CHARGING CURRENT

CAUSE:	REMEDY:
Poor brush connection.	Clean and adjust or replace brushes. Repair commutator if necessary. Make certain that brushes do not bind in brush holders and that brush wires are connected properly. See additional information concerning maintenance of brushes and commutator.
Loss of residual magnetism in field poles, by long inactivity, lightning striking system, overload or short circuit.	Raise DC brushes and contact positive and negative brushes to a 6 or 12 volt storage battery momentarily to produce polarity.
Too much resistance in adjustable field resistor.*	Reduce resistance of resistor or replace resistor.*
No current in field circuit.	Use a 6 or 12 volt battery and test lamp to find open circuit.
Open field circuit in field coils, field or resistor.*	A DC test lamp should be used to trace the circuit. If open circuit is indicated, repair or replace defective part.
Voltage too low to close reverse current relay.	Reduce resistance of adjustable field resistor* or increase speed.
Open armature windings due to commutator throwing solder from riser because of excessive heating.	Commutator must be resoldered, turned and undercut. See commutator maintenance instructions.
Coils shorted or open.	Check for open circuit with a continuity lamp and for short circuit with an ohmmeter. Replace coil if necessary.
Defective ammeter	Repair or replace or bypass meter.

*If resistor is used.

Katolight Service - Master Repair Manual - Page 2458

CAUSE:	REMEDY:
Open ammeter.	Check for open circuit with a continuity lamp. Replace or repair defective part.

LOW CHARGING RATE

CAUSE:	REMEDY:
Low Speed: 1. Defective governor. 2. Defective carburetor. 3. Defective bearing. 4. Armature rubbing on poles.	1. Adjust, repair or replace governor. 2. Adjust, repair or replace carburetor. 3. Replace bearing. 4. Replace bearing.
Insufficient excitation.	Decrease field resistance by adjusting resistor.*
Line loss.	Increase size of line wire.
High resistance connections. (Connections will be warm or hot.)	Make better connections electrically and mechanically.
Reversed field coil or armature coil connection.	Connect properly. (Will be correct from factory.)
Shorted field.	Test field coils for possible short by checking resistance with an ohmmeter or resistance bridge. Replace defective coil if necessary.
Sulfated battery.	Check voltage at load terminal.
Brushes dirty or not properly seated.	Clean or replace brushes and reseat.
Commutator dirty or in need of repair.	Clean or repair as necessary. See additional information concerning care and repair of commutator.
Weak field due to operating in warm temperature.	Improve the ventilation if generator is housed indoors. Field current can be increased providing the generator temperature does not exceed temperature rating stamped on the nameplate.

FLUCTUATING CHARGE CURRENT

CAUSE: (Will be indicated by fluctuating ammeter)	REMEDY:
Irregular speed of prime mover.	Check and adjust governing device and carburetor of engine.
Voltage regulation not operating properly. (Regulation by variable resistor*)	Adjust resistor*.

*If resistor is used.

Katolight Service - Master Repair Manual - Page 2459

CAUSE:	REMEDY:
Poor brush contact.	Clean and adjust or replace brushes. See additional information concerning care of brushes, commutator.
Loose terminal or load connections.	Make better connections mechanically and electrically.
Commutator out of round or pitted.	Turn commutator on a lathe concentric with bearings. See commutator maintenance instructions.
DC excitation voltage fluctuating.	Trace DC excitation through brushes, commutator and field coils and make repairs as necessary.
Shorted field coil.	Test field coils for possible short by checking resistance with an ohmmeter or resistance bridge. Replace defective coil if necessary.
Defective bearing causing uneven air gap.	Replace worn bearing

HIGH CHARGE CURRENT

CAUSE:	REMEDY:
Short circuit in line. (Ammeter will read, but battery will not charge.)	Check for short in line. Check the line by disconnecting the generator from the line at the generator terminal box.
Shorted battery.	Check battery cell voltage.
Improper field adjustment (excessive magnetic field strength).	Increase excitation field resistance by adjusting resistor* or adding a fixed field resistor.
Excessive speed.	Adjust governor and carburetor of engine, making certain generator operates at rated speed as stamped on the nameplate.
Operating in sub-zero temperatures.	Increase field resistance.*

BRUSH SPARKING

CAUSE:	REMEDY:
Commutator defective: 1. Outer surface not concentric with shaft. 2. High mica bars. 3. Surface pitted or rough.	Machine and undercut commutator according to specific instructions in this book.

*If resistor is used.

CAUSE:	REMEDY:
Brushes not in commutating plane.	Brush holder rings are set at the factory and marked in a position so the brushes ride at electrical neutral points on the commutators. If brush ring is removed for any reason, it should be replaced in the original position as marked.
Loose brush holder.	Re-align and tighten.
Lack of brush pressure.	Adjust or replace brush tension spring.
Improper grade of brushes.	If time permits, order brushes from the factory by part number. It is best to keep an extra set of brushes on hand and replace old brushes when approximately two-thirds worn.
Dirty commutator.	Sand lightly with 00 sandpaper or commutator resurfacer.
Open armature.	Check for open circuit with a continuity lamp. Repair or replace armature if necessary.
Grounded, open or shorted field windings.	Check for open circuit with a continuity lamp and for short circuit with an ohmmeter. Replace coil if necessary.

OVERHEATING

Machines are designed to withstand a temperature rise of 50% C
(see nameplate rating)
50 degrees Centigrade equals 122 degrees Fahrenheit.

CAUSE:	REMEDY:
Generator overloaded.	Reduce charge rate (check ammeter readings and compare with nameplate rating) by reducing speed or adjusting resistor*.
Clogged ventilating screens.	Clean air passages.
High room temperature.	Improve ventilation.
Insufficient circulation.	Provide cross-ventilation.
Generator coils or windings shorted or grounded.	Test field coils for possible short by checking resistance with an ohmmeter or resistance bridge. Replace defective coil if necessary.

*If resistor is used.

CAUSE:	REMEDY:
Excessive brush pressure.	Adjust pressure or replace brush tension springs.
Bent shaft.	Straighten or replace.
Endbells out of position.	Align endbells so that the air gap between the rotating part and the stationary part is equal at all points.
Dry bearing.	Replace bearing.

MECHANICAL NOISE

CAUSE:	REMEDY:
Dry or defective bearing.	Replace bearing.
Rotor rubbing on stator.	Replace worn bearings.
Loose lamination.	Tighten bolts, dip in varnish, and bake.
Armature out of balance.	Balance armature.
Loose bolt connection or screws.	See that all bolts and screws are tight and examine daily to keep them so.

RADIO INTERFERENCE

CAUSE:	REMEDY:
Radio frequency interference generated by sparking brushes.	Connect .5 mfd. capacitors from all ungrounded brushes to the frame. Voltage rating of the capacitors should be at least twice the rated voltage of the circuit to which they are connected.
Radio interference caused by electrical system of prime mover.	Suppress radio interference. Consult a competent radio repairman or electrician.

GENERATOR FRAME PRODUCES SHOCK WHEN TOUCHED

CAUSE:	REMEDY:
Grounded armature or field coil.	Repair.

MODEL SERIES

60300 to 60496

4 CYCLE
BRIGGS & STRATTON
MILWAUKEE WIS. U.S.A.
GASOLINE ENGINES

OPERATING AND MAINTENANCE INSTRUCTIONS

IMPORTANT: Do not start this engine before reading Section I and Section II of this manual. It takes only a few minutes.

CAUTION

1. PROVIDE EFFICIENT VENTILATION. Exhaust gases contain carbon monoxide which is odorless and a deadly poison. Proper care must be taken to provide efficient ventilation.
2. DO NOT FILL GASOLINE TANK WHILE ENGINE IS RUNNING. Avoid spilling gasoline on a hot engine — this may cause an explosion and serious injury.
3. KEEP ENGINE CLEAN. This engine is air-cooled. If cooling system becomes clogged, serious damage may result. Therefore, keep the blower screen, fins on flywheel, cylinder head and block free from grass or dirt.
4. Be sure nobody is behind you when starting engine with rope starter.

Katolight Service - Master Repair Manual - Page 2463

SECTION I

BEFORE STARTING

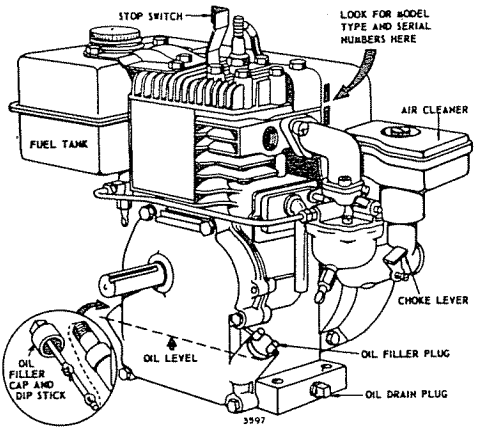

FILL CRANKCASE WITH OIL

Remove the oil filler plug.

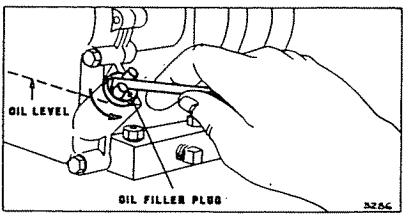

Place engine level. Fill crankcase to point of overflowing. ("F" mark on dipstick models – See illustration). POUR SLOWLY. (Capacity 1¼ pints). Replace the filler plug.

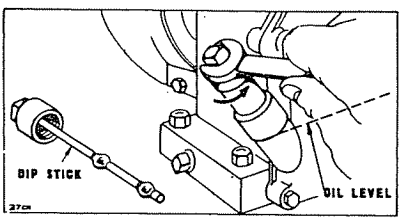

Any high quality detergent oil having the American Petroleum Institute classification "For Service MS" can be used in your Briggs & Stratton engine. Detergent oils keep the engine cleaner and retard the formation of gum and varnish deposits.

OIL RECOMMENDATIONS

WINTER	SUMMER
(Below 40°F.)	(Above 40° F.)
Use SAE 5W-20	Use SAE 30
If Not Available	If Not Available
Use SAE 10W	Use SAE 10W-30
Above 10°F.	

Nothing should be added to the recommended oils.

FILL FUEL TANK

CAUTION: Use clean, fresh "regular" grade gasoline. Purchase fuel in small quantities and keep in clean container. Prolonged storage of gasoline can result in the formation of gum deposits which clog the fuel system.

DO NOT MIX OIL WITH GASOLINE

"OIL FOAM"* AIR CLEANER

"Oil Foam"* air cleaners are oiled at the factory and do not require initial service. See SECTION III for regular maintenance recommendations.

OIL BATH AIR CLEANER

Oil bath air cleaners must be filled before operating engine. Use same grade oil as in crankcase. Turn filter element counter-clockwise to unscrew. Lift off filter element. Lift off bowl.

Pour oil in small bottom part of bowl to "OIL LEVEL" mark at end of arrows. Replace bowl on carburetor. Replace filter element and turn clockwise until snug. Be sure gaskets are in place.

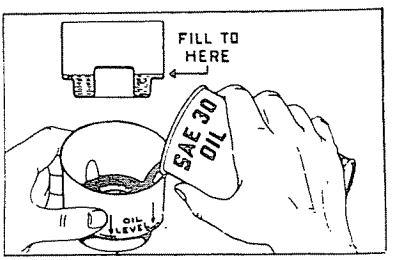

Katolight Service - Master Repair Manual - Page 2464

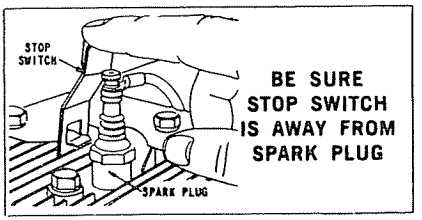

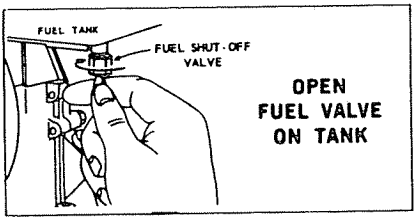

CHOKE ENGINE — MANUAL CONTROL

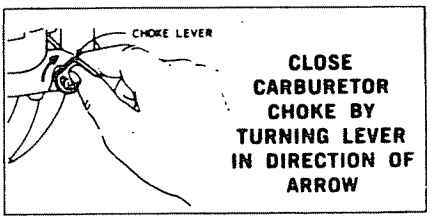

CHOKE ENGINE — CHOKE-A-MATIC CONTROL

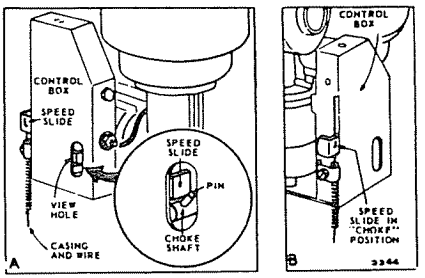

The Choke-A-Matic Carburetor permits choking, varying the engine speed, and stopping the engine by merely moving a single remote control lever to the desired position.

Move lever to "Full Choke" or "Start" position.

NOTE: This should fully close choke on carburetor. If it does not, remote control must be re-adjusted. See "Adjustment of Choke-A-Matic Carburetor Controls", Section IV.

SECTION II
STARTING

"Easy-Spin"* Rewind Starter

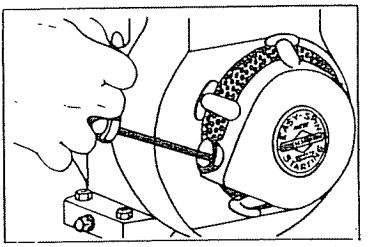

Grasp starter grip as illustrated and pull out cord two to three feet.

Repeat if necessary with choke opened slightly. When engine starts, open choke gradually.

"Easy-Spin"* Rope Starter

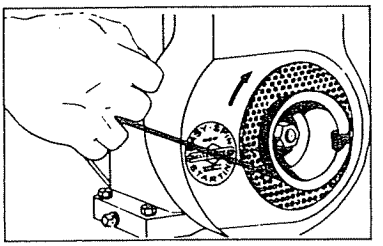

Wind starter rope around the pulley in direction shown by arrow.

Pull the rope with a quick full arm stroke. Repeat if necessary with choke open slightly. When engine starts open choke gradually.

Shock-Free Wind-Up Starter

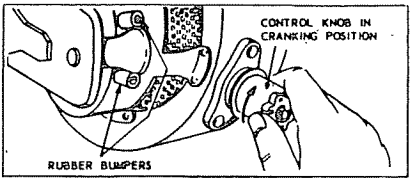

1. Turn control knob, on the side of the blower housing clockwise to crank position.

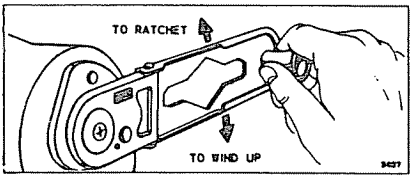

2. Lift cranking handle and extend to cranking position.
3. 360° Rotation Type — Turn handle clockwise to wind up starter. Fold cranking handle to retracted position.
   20° Ratchet Type — Ratchet type starters are wound up by moving handle clockwise as far as possible and returning handle to original position. Repeat this operation until spring is fully wound. Fold cranking handle to retracted position and place knob between rubber bumpers.
4. Turn control knob on blower housing counter-clockwise to "Start" position. As engine starts, gradually move choke control to open (run) position.

CAUTION: ALWAYS KEEP HANDS AND FEET CLEAR OF MOWER BLADE OR OTHER ROTATING MACHINERY.

CAUTION: NEVER WORK ON MOWER BLADES WHEN "SHOCK-FREE" STARTER IS WOUND UP. IF BLADE BECOMES JAMMED SO THAT STARTER WILL NOT CRANK ENGINE, REMOVE BLOWER HOUSING AND STARTER ASSEMBLY FROM ENGINE BEFORE DOING ANY WORK ON MOWER OR ENGINE.

Do not turn the control knob to "Crank" position while engine is running.

110 Volt A. C. Electric Starter

Attach electrical cord to engine starting motor. To start engine, plug starter cord into wall receptacle. When engine starts, remove plug from wall receptacle. Open choke gradually. A warm engine will require little or no choking. Detach cord at engine.

If the engine does not start after two or three attempts, open choke wide, wait a few seconds, then repeat.

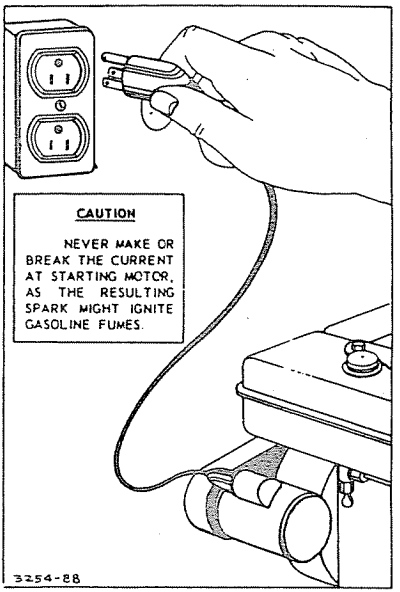

STOPPING

Choke-A-Matic Type

Move control lever to stop position.

Manual Choke Type

Push the stop switch against end of spark plug.

NOTE: Snow removal equipment should be run at slow speed for approximately five minutes after use to permit engine heat to melt snow and ice that may have collected on starter, governor and carburetor controls.

SECTION III

REGULAR MAINTENANCE

CHANGE OIL (Crankcase)

Change oil after first 5 hours of operation. Thereafter change oil every 25 hours of operation. Remove drain plug and drain oil while engine is warm. Replace drain plug. Remove oil filler cap and refill with new oil of proper grade. Replace filler cap. Check oil level regularly — at least after each 5 hours of operation. BE SURE OIL LEVEL IS MAINTAINED TO POINT OF OVERFLOWING.

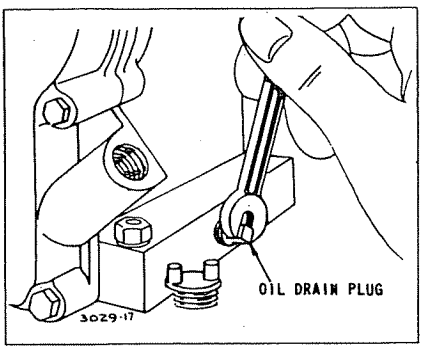

CHECK OIL (6 to 1 Gear Reduction Models)

Remove the oil plug in lower half of gear cover every 100 hours of operation to check the oil level.
Add SAE 10W-30 oil at upper oil filler plug until oil runs out of lower hole. Replace both plugs.
NOTE: Filler plug has vent hole and must be placed in top opening.

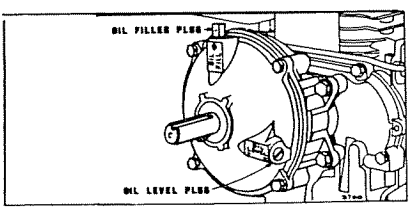

SERVICE AIR CLEANER REGULARLY

Clean and refill the air cleaner frequently (every few hours under extremely dusty conditions). Clean and refill at least every 25 hour under normal conditions.

Oil Bath Type

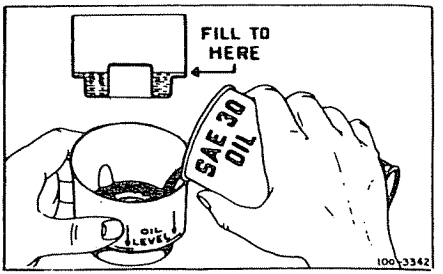

1. Turn filter element counter-clockwise to unscrew. Lift off filter element.
2. Lift off bowl. Pour out old oil.
3. Wash the filter element and bowl by swishing in gasoline and shake or wipe dry.
4. Pour oil in small bottom part of bowl to "OIL LEVEL" mark shown at end of arrows. Replace bowl on carburetor.
5. Replace filter element and turn clockwise until snug. Be sure gaskets are in place.

SERVICING "OIL FOAM"* AIR CLEANER

1. Remove thumb screw.
2. Lift air cleaner from carburetor.
3. Take air cleaner apart.
4. A — Wash element in solvent such as kerosene.
   B — Squeeze dry and re-oil with 3 tablespoons engine oil.
   C — Squeeze again to spread oil through foam.
   D — Assemble parts — fasten to carburetor with thumb screw.

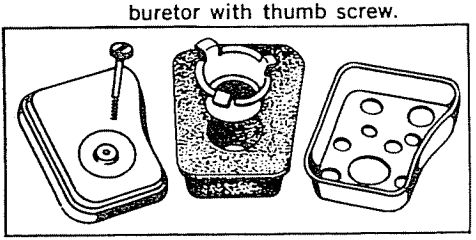

Katolight Service - Master Repair Manual - Page 2467

DRAINING FUEL TANK AND CLEANING FUEL FILTER

CAUTION: Gasoline is highly flammable. Avoid spark or flame.

1. To drain fuel tank, loosen packing nut and remove fuel shut-off valve assembly.
2. Remove fuel pipe.
3. Remove fuel tank outlet and filter screen assembly from fuel tank.
4. Clean fuel filter in gasoline, alcohol or lacquer thinner. Screen not removable.
5. Reassemble fuel tank outlet assembly, fuel pipe, and fuel shut-off assembly.

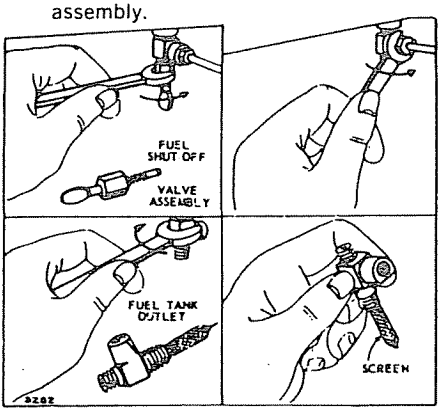

STORAGE INSTRUCTIONS

Engines stored for over 30 days should be completely drained of fuel to prevent gum deposits forming on essential carburetor parts, fuel filter, fuel lines and tank.

1. Drain fuel tank completely.
2. Reassemble fuel shut-off assembly.
3. Operate engine until gasoline in carburetor is completely consumed.
4. While engine is still warm, drain oil from crankcase. Refill with fresh oil.
5. Remove spark plug, pour one ounce SAE-30 oil into cylinder and crank slowly to distribute oil. Replace spark plug.
6. Clean dirt and chaff from cylinder, cylinder head fins and blower housing.

SECTION IV
ADJUSTMENTS

GOVERNOR ADJUSTMENTS

There are two different types of governors used on these engines — air vane and mechanical. The recommended operating speed range is 2200 to 3600 RPM. Idle speed is 1750 RPM.

AIR VANE GOVERNOR ADJUSTMENT

Standard Speed Control — Speed adjusting thumb nut is located on top of engine. To increase speed, turn thumb nut counter-clockwise.

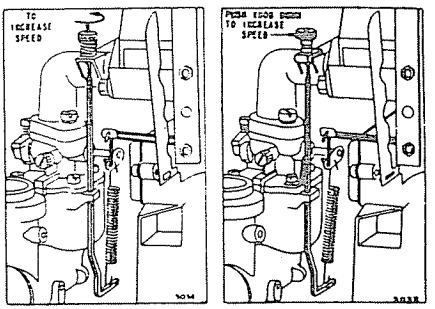

Standard Speed **Manual Friction**

Manual Friction Control — Push knob down to increase speed. Do not turn. Knob is crimped on control rod.

Remote Governor Control

The speed of engines equipped with remote governor controls is varied by movement of the control lever illustrated below. To adjust: Move control lever to High Speed position. Loosen swivel screw. Move wire through swivel until Top Speed limit device reaches stop. Re-tighten swivel screw. Bend loose end of wire around swivel. Cut off excess wire.

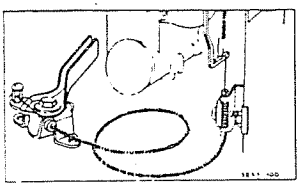

Katolight Service - Master Repair Manual - Page 2468

REMOTE THROTTLE CONTROL

Top speed of the engine is controlled by the governor. All other speeds from idle to top speed are controlled by a remote control lever.

Move control lever to LOW speed position. Loosen screw on swivel. Move wire through swivel until carburetor throttle closes. Tighten swivel screw, bend loose end of wire around swivel. Cut off excess wire.

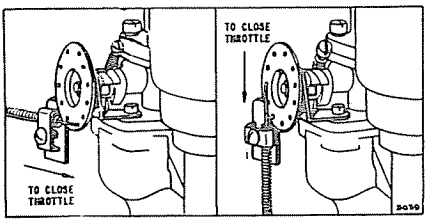

MECHANICAL GOVERNOR ADJUSTMENTS

Standard Speed Control

Speed adjusting thumb nut is located on top of engine. To increase speed turn adjusting thumb nut counter-clockwise.

NOTE: Spring loop should be in No. 3 hole of governor for speeds below 3100 RPM. Use No. 5 hole above 3100 RPM.

Standard **Remote**

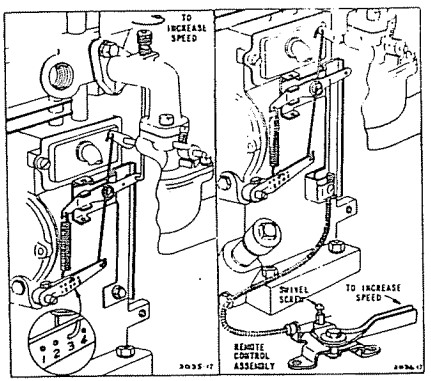

Remote Governor Control — Mechanical governor remote controls are adjusted in the same manner as air vane controls.

CARBURETOR ADJUSTMENTS

Initial Adjustment

Close the needle valve (turn clockwise) carefully to avoid damaging valve. Then open it 1½ turns counter-clockwise. Close the idle valve (clockwise). Open it ½ to ¾ turns. This initial adjustment will permit the engine to be started and warmed up for several minutes prior to final adjustment.

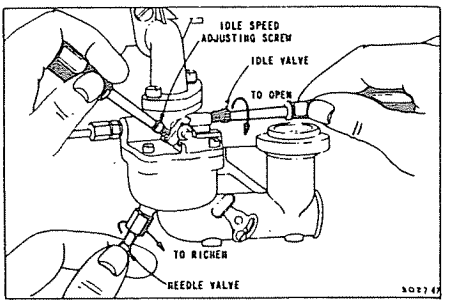

Final Adjustment

Turn needle valve in until engine misses (lean mixture), then turn it out past smooth operating point until engine runs unevenly (rich mixture). Now turn needle valve to the mid-point between rich and lean so the engine runs smoothly.

Hold throttle at idle position and set idle speed adjusting screw until fast idle is obtained (1750 RPM). Hold throttle in idle position and turn idle valve in (lean) and out (rich) until engine idles smoothly. Then reset idle speed adjusting screw so that engine idles at 1750 RPM. Release throttle — engine should accelerate without hesitation or sputtering. If engine does not accelerate properly, the carburetor should be readjusted — usually to a slightly richer mixture.

See Next Page for CHOKE-A-MATIC CARBURETOR CONTROL Adjustments

ADJUSTMENT OF CHOKE-A-MATIC CARBURETOR CONTROLS

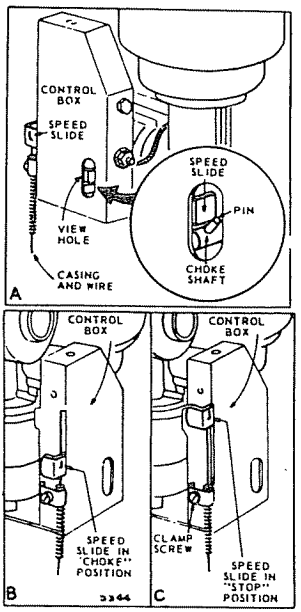

Proper choke and stop switch operation is dependent upon proper adjustment of remote controls on the powered equipment.

To Check Operation of Controls:

1. Remove air cleaner.
2. Move remote control lever to "Choke" position. The carburetor choke should be closed, (See "B") and speed slide at end of slot.
3. Move remote control to "Stop" position (See "C"). The speed slide must be at end of slot for stop switch to make good contact.
4. Move remote control to "Fast" and observe through view hole (See "A"). Speed slide must be just touching pin on choke shaft.

To Adjust:

With remote control lever at "Fast" position, loosen casing clamp screw and move casing and wire up or down until speed slide, seen through view hole, is just touching pin on choke shaft. Tighten casing clamp screw. Recheck operation of controls. Reassemble air cleaner.

REMOVING CARBON DEPOSITS

Clean combustion chamber, top of piston and around both valves every 100-300 hours of operation.

GENERAL INFORMATION

These engines are single-cylinder, L-Head, air-cooled type.

MODEL SERIES 60300 to 60496

Bore	2⅜"
Stroke	1½"
Displacement	6.65 cu. in.
Horsepower	2.25 HP max. at 3600 RPM
Torque (Ft.-Lbs.)	3.43 max. at 3200 RPM

The horsepower ratings listed above are established by standard I.C.E.I. procedures. For practical operation, the horsepower loading should not exceed

Katolight Service - Master Repair Manual - Page 2470

THE FOLLOWING PERIODIC ADJUSTMENTS MAY BE NECESSARY FOR BEST PERFORMANCE IN HEAVY DUTY INDUSTRIAL SERVICE. MAJOR REPAIRS SHOULD NOT BE ATTEMPTED WITHOUT PROPER KNOWLEDGE AND TOOLS. SEE YOUR PHONE BOOK.

Complete Repair information may be found in "Repair Instructions" available from Briggs & Stratton Corp., Milwaukee, Wisconsin 53201.

SPARK PLUG

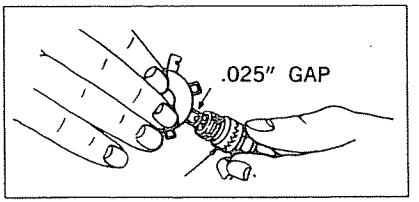

Clean and reset gap at .025" every 100 hours of operation.

CAUTION: Blast cleaning of spark plug in machine using abrasive grit is not recommended.

Spark Plug Type — AC-GC-46; AL-A7R; or Champion J-8.

BREAKER POINTS

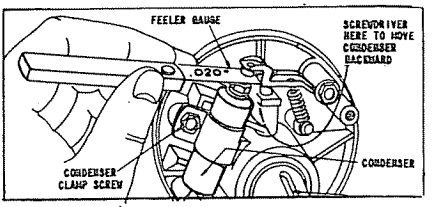

Breaker Point Gap, .020". Access to points requires removal of blower housing & flywheel. **NOTE:** Rope Starter crankshafts have **LEFT HAND THREAD,** Rewind and Wind-up — **RIGHT HAND THREAD.**

Valve Clearance — Intake .005"-.007" Exhaust .009"-.011"

BRIGGS & STRATTON ENGINE WARRANTY POLICY

Here is a reproduction of the Briggs & Stratton Warranty that is supplied with each engine. (Be sure to fill out and return registration card at time of purchase):

THE WARRANTY

For ONE YEAR from purchase date, Briggs & Stratton Corp. will replace for the original purchaser, FREE OF CHARGE, any part, or parts found upon examination by any Factory Authorized Service Outlet, or by the Factory at Milwaukee, Wisconsin, to be DEFECTIVE IN MATERIAL AND/OR WORKMANSHIP.

All transportation charges on parts submitted for replacement under this Warranty must be borne by purchaser.

There is no other Warranty express or implied. Briggs & Stratton Corp. shall in no event be liable for consequential damages.

WARRANTY DOES NOT COVER BENT CRANKSHAFTS, FAILURE TO MAINTAIN OIL IN CRANKCASE, USER NEGLIGENCE OR ABUSE

Warranty does not cover bent crankshafts, failure to maintain oil in crankcase, user negligence, abuse, etc.

Briggs & Stratton Engines and replacement parts will assure continuous engine satisfaction. Contact one of the Authorized Service Dealers listed under "Engines — Gasoline" — or "Gasoline Engines" in the Yellow Pages of your Telephone Directory.

Katolight Service - Master Repair Manual - Page 2471

ENGINE
WARRANTY INSTRUCTIONS

When you request engine or parts warranty service, always supply the Briggs & Stratton Authorized Service Dealer the following information.

Model Number, Type Number and Serial Number that are stamped on engine blower housing.

Date Purchased.

Kind of equipment engine is used on.

Name or trademark of manufacturer.

Name and address of dealer from whom purchased.

Approximate number of hours engine has run since equipment was purchased.

Also, give complete report of trouble experienced and special servicing instructions.

The above information is necessary to insure prompt and proper service.

Katolight Service - Master Repair Manual - Page 2472

Illustrated Parts List

MODEL SERIES

60300 To 60497

TYPE NUMBERS

0010 to 0061
0110 to 0201
942000 to 942277

61300 To 61497

TYPE NUMBERS

0110 to 0167
942500 to 942660

TO FIND

THE CORRECT NUMBER OF THE PART YOU NEED:

FOLLOW THE INSTRUCTIONS BELOW.

A. Refer to Engine Model, Type and Serial Number that is stamped on the blower housing or name plate of engine. (Engine type numbers such as 942276 are listed complete. Engine type numbers such as 0147 01 are listed herein only as 0147. The two digits (01 or 02, etc.) to the right of the space are not needed for parts identification). Then use the Illustrated Parts List covering these Model Series.

B. Refer to Illustrated Parts section and compare the old part with illustration. The number on the illustration is the Reference Number. Assemblies include all parts shown in frames. All parts shown in assembly frames on which individual reference numbers are given can be purchased separately.

C. After the Reference Number has been identified, refer to the Numerical Parts List, where Reference and Master Part Numbers are listed. THE MASTER PART IS USED ON ALL TYPE NUMBERS EXCEPT THOSE TYPE NUMBERS UNDER "NOTE"

D. If a "Note" appears below the Master Part Number, this means that this part differs from the Master Part for certain types. If the Type Number is listed under "Note", order the part referred to.

E. If the Engine Type Number does not appear after any part number listed under "Note", use the Master Part Number.

F. For Type Numbers higher than those covered by this book, please refer to the factory if you are unable to identify the part by comparison.

PRINTED IN U.S.A.

Authorized
BRIGGS & STRATTON
Service

Katolight Service - Master Repair Manual - Page 2473

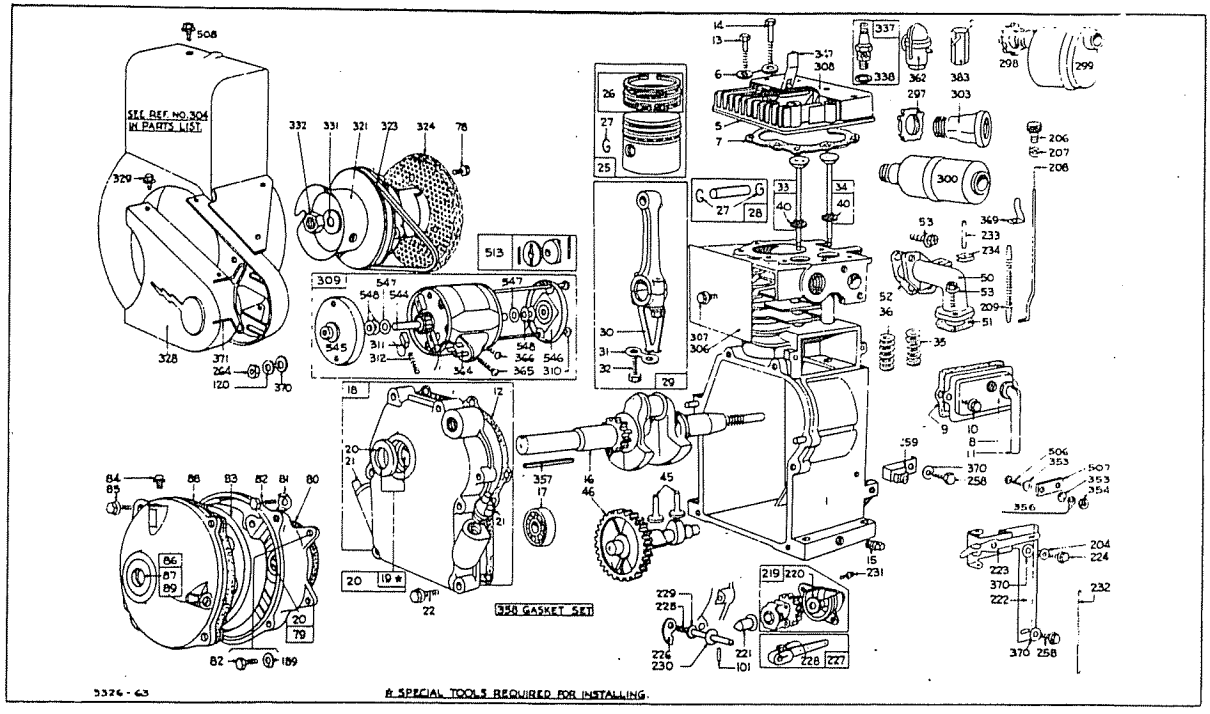

CYLINDER, CRANKSHAFT, PISTON, ELECTRIC STARTER AND CONNECTING ROD PARTS ASSEMBLIES INCLUDE ALL PARTS SHOWN IN FRAMES.

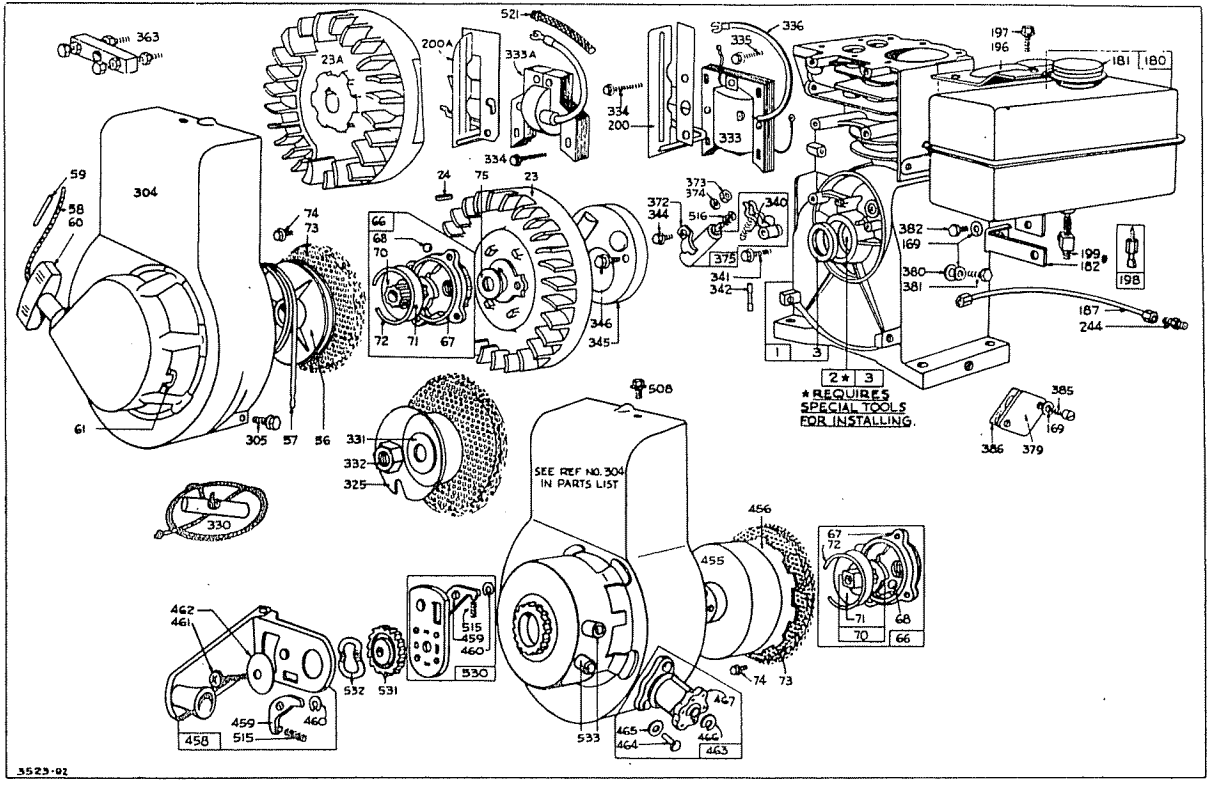

FUEL SYSTEM, MAGNETO, STARTER AND BLOWER HOUSING PARTS
ASSEMBLIES INCLUDE ALL PARTS SHOWN IN FRAMES.

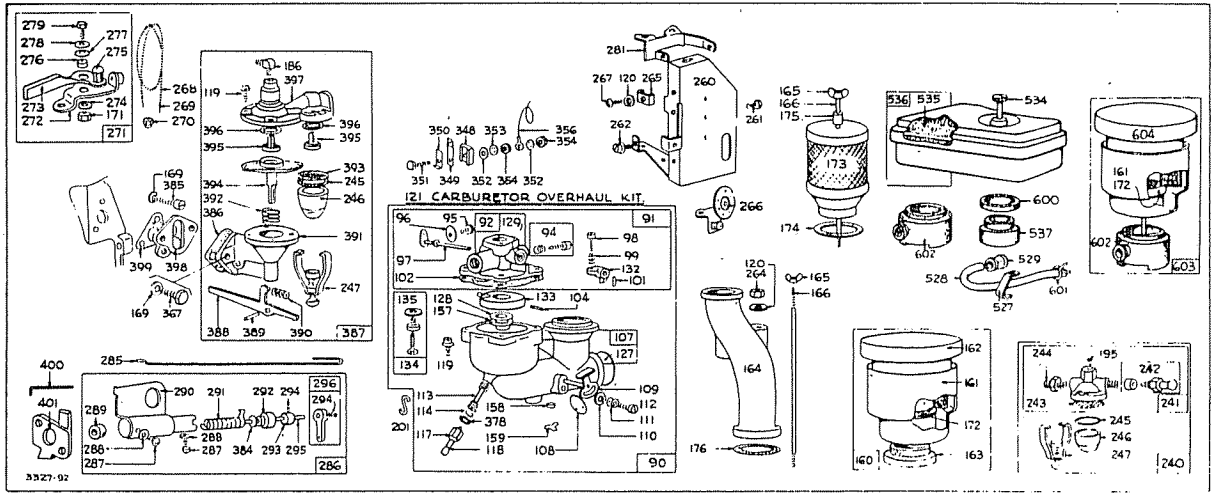

ASSEMBLIES INCLUDE ALL PARTS SHOWN IN FRAMES.

Parts List

REF. NO.	PART NO.	DESCRIPTION
1	**296561**	Cylinder Assembly Used on Model 60300, 60400 Series after Serial No. 5810030.
	Note:	**294301** Cylinder Assy. Used on Model 60300, 60400 Series before Serial No. 5810060. **297083** Cylinder Assy. Used on Model 60300, 60400 Series type Nos. 0016, 0188, 0189, 942062, 942101, 942152, 942154, 942155, 942162, 942165, 942170, 942184, 942217, 942239, 942246, 942248.
	296610	Cylinder Assembly Used on Model 61300, 61400 Series after Serial No. 5810030.
	Note:	**295469** Cylinder Assy. Used on Model 61300, 61400 Series before Serial No. 5810060. **297084** Cylinder Assy. Used on type Nos. 942535, 942547, 942559, 942562, 942602, 942603, 942624, 942644 **295733** Cylinder Assy. Used on type No. 942645.
2	**293708**	Bushing – Cylinder
	Note:	**293708** and **220538** Bushings Require special tools for installation. **220538** Bushing – Cyl. Used on type No. 942246.
3	**89660**	Seal – Oil
5	**210812**	Head – Cylinder
	Note:	**210209** Head – Cylinder Used on engines before Serial No. 5810060. **210623** Head – Cylinder Used after Serial No. 5810030. On Model 60300, 60400 Series type Nos. 0182, 0200, 942074, 942095, 942096, 942117, 942151, 942174; also used on Model 61300, 61400 Series type Nos. 0150, 0152, 0156, 942557, 942564, 942573, 942593, 942630, 942635, 942636. **210624** Cylinder Head used on the above type numbers before Serial No. 5810060. Uses: **220863** Washer – Spacer (Between tank bracket and one boss on cylinder head) **295053** Head – Cylinder Used on type No. 942217.
6	**22963**	Washer – Plain
7	**‡27670**	Gasket – Cylinder Head
	Note:	Two No. 27670 Gaskets are used on Model 60300, 60400 Series type Nos. 0182, 0200, 942074, 942095, 942096, 942117, 942151, 942096, 942117, 942151, 942174; also used on Model 61300, 61400 Series type Nos. 0150, 0152, 0156, 942557, 942564, 942573, 942593, 942630, 942635, 942636.
8	**294178**	Breather – Valve Chamber
9	**‡27549**	Gasket – Valve Cover
10	**93394**	Screw – Breather Mounting Sem
11	**66638**	Tube – Breather
12	**‡27586**	Gasket – Crankcase – .015" thick (Standard)
	‡27617	Gasket – Crankcase – .005" thick
	‡27618	Gasket – Crankcase – .009" thick
13	**91386**	Screw – Cylinder Head (2" long)
14	**92674**	Screw – Cylinder Head (2-3/8" long)
	Note:	**92985** Screw – Cylinder Head **63336** Spacer Used on type No. 942534.
15	**91249**	Plug – Pipe, 1/4" Std., Square Hd.
	Note:	**92737** Plug – Oil Drain Used on type No. 942217.
16	**260271**	Crankshaft
	Note:	**260036** Crankshaft Used on Model 60300, 60400 Series type Nos. 0027, 0120, 0140, 0158, 0165, 0166, 0171, 0177, 0178, 0192, 942015, 942021, 942031, 942034, 942036, 942042, 942052, 942061, 942072, 942073, 942077, 942107, 942146, 942151, 942166, 942173, 942179, 942186, 942202, 942203, 942241, 942249, 942275; also used on Model 61300, 61400 Series type Nos. 0150, 0151, 0156, 0160, 942515, 942521, 942543, 942544, 942564, 942565, 942586, 942589, 942631, 942637, 942648, 942649, 942652. **260037** Crankshaft Used on Model 60300, 60400 Series type Nos. 0028, 0060, 0164, 0168, 0174, 0175, 0182, 942029, 942032, 942033, 942035, 942038, 942046, 942047, 942053, 942054, 942075, 942083, 942096, 942124, 942142, 942147, 942149, 942182, 942188, 942190, 942191, 942207, 942237, 942240, 942245, 942269; also used on Model 61300, 61400 Series type Nos. 0155, 0159, 0162, 942536, 942537, 942540, 942557, 942558, 942566, 942568, 942574, 942579, 942587, 942607, 942620, 942653, 942657. **260039** Crankshaft Used on Model 60300, 60400 Series type Nos. 0061, 942030, 942043, 942055, 942067, 942070, 942071, 942097, 942099, 942100, 942119, 942144, 942148, 942150, 942159, 942170, 942178, 942181, 942184, 942215, 942217, 942220, 942239; also used on Model 61300, 61400 Series type Nos. 0158, 942570, 942581, 942608, 942609, 942638, 942642, 942643, 942644. **260043** Crankshaft Used on Model 60300, 60400 Series type Nos. 0045, 0125, 0151, 0170, 0191, 0200, 942017, 942044, 942045, 942056, 942084.

‡ Included in Gasket Set – Part No. 297275

Katolight Service - Master Repair Manual - Page 2477

REF. NO.	PART NO.	DESCRIPTION
		942098, 942108, 942111, 942114, 942117, 942121, 942125, 942134, 942157, 942160, 942167, 942183, 942201; also used on Model 61300, 61400 Series type Nos. 0165, 942517, 942538, 942571, 942575, 942578, 942590, 942605, 942627.
		260100 Crankshaft Used on Model 60300, 60400 Series type Nos. 0049, 0126, 0152, 0154, 0160, 0167, 0172, 0198, 942018, 942079, 942085, 942118, 942130, 942132, 942161, 942175, 942180, 942197, 942214, 942226, 942230, 942232, 942234, 942253, 942254, 942262; also used on Model 61300, 61400 Series type Nos. 942518, 942526, 942533, 942585, 942599, 942606, 942616, 942623, 942658.
		260103 Crankshaft Used on Model 60300, 60400 Series type Nos. 0121, 0141, 0179, 0197, 942016, 942022, 942041, 942101, 942106, 942177, 942192, 942200, 942212, 942213, 942219, 942224, 942270, 942271; also used on Model 61300, 61400 Series type Nos. 0152, 0153, 0154, 942516, 942522, 942532, 942554, 942567, 942576, 942577, 942580, 942597, 942598, 942636.
		260116 Crankshaft Used on Model 60300, 60400 Series type Nos. 0035, 0150, 0155, 0180, 0187, 942081, 942089, 942113, 942129, 942187, 942206, 942216, 942222, 942223, 942229, 942233, 942238, 942247, 942258; also used on Model 61300, 61400 Series type Nos. 0161, 942546, 942588, 942591, 942610, 942612, 942613, 942614, 942617, 942619, 942621, 942632, 942641.
		260118 Crankshaft Used on Model 60300, 60400 Series type Nos. 0181, 0188, 0189, 942140, 942165, 942242, 942246, 942248, 942261; also used on Model 61300, 61400 Series type No. 942628.
		260180 Crankshaft Used on type No. 942622.
		260196 Crankshaft Used on Model 60300, 60400 Series type Nos. 0025, 942037, 942221; also used on Model 61300 type No. 942539.
		260248 Crankshaft Used on type No. 942204.
		260265 Crankshaft Used on type No. 942645.
		260266 Crankshaft Used on Model 60300, 60400 Series type Nos. 0161, 942049, 942143, 942274; also used on Model 61300 Series type No. 942624.
		260272 Crankshaft Used on Model 60300, 60400 Series type Nos. 0010, 0050, 0110, 0115, 0132, 0162, 0163, 0166, 0169, 0176, 0185, 0193, 942010, 942012, 942013, 942019, 942023, 942024, 942025, 942050, 942057, 942064, 942065, 942066, 942069, 940278, 942082, 942087, 942091, 942092, 942095, 942102, 942103, 942105, 942116, 942123, 942126, 942127, 942131, 942135, 942136, 942141, 942163, 942168, 942169, 942185, 942193, 942205, 942218, 942252, 942276; also used on Model 61300, 61400 Series type No. 0110, 0163, 942510, 942512, 942513, 942519, 942525, 942528, 942529, 942531, 942534, 942573, 942600, 942639, 942640, 942654, 942655, 942659.
		260424 Crankshaft Used on type Nos. 942122, 942569.
		260445 Crankshaft Used on type Nos. 942152, 942155.
		260493 Crankshaft Used on Model 60300, 60400 Series type Nos. 0026, 942039, 942048, 942074, 942090, 942094, 942112, 942174, 942198; also used on Model 61300, 61400 Series type Nos. 0157, 942583, 942604, 942626, 942630, 942651.
		260494 Crankshaft Used on Model 60300, 60400 Series type Nos. 0156, 0159, 942040, 942068, 942086, 942133, 942164, 942189, 942243, 942244, 942259, 942263; also used on Model 61300, 61400 Series type Nos. 942553, 942572, 942582, 942592, 942593, 942615, 942618, 942625.
		260495 Crankshaft Used on type No. 942541.
		260496 Crankshaft Used on Model 60300, 60400 Series type Nos. 0029, 942059; also used on Model 61300 Series type No. 942555.
		260528 Crankshaft Used on type No. 942584.
17	99158	Bearing – Ball
18	294305	Cover Assembly – Crankcase Used on Model 60301, 60302, 61301, 61302, 61303 Series.
	Note:	**294306** Cover Assy. – Crankcase Used on Model 60331, 60332, 60431, 60432, 61331, 61332, 61431, 61432 Series
		294307 Cover Assy. – Crankcase Used on Model 60401, 60402, 61401, 61402 Series.
		294308 Cover Assy. – Crankcase Used on Model 60311, 60312, 60351, 60352, 61311, 61312, 61351, 61352, 61353.

‡ Included in Gasket Set – Part No. 297275

Katolight Service - Master Repair Manual - Page 2478

REF. NO.	PART NO.	DESCRIPTION
		295166 Cover Assy. – Crankcase Used on Model 60300 Series type Nos. 0115, 0116, 0184, 0194, 942256, 942264, 942265.
19	**293708**	Bushing – Crankcase Cover
	Note:	Parts 220538, 293708 and 294499 require special tools for installation.
	Note:	**220538** Bushing – Crankcase Cover Used on Model 60311, 60312, 60351, 60352, 61311, 61312, 61351, 61352, 61353 Series. **294499** Bushing Assy. – Crankcase Cover Used on Model 60401, 60402, 61401, 61402 Series.
20	**89660**	Seal – Oil
	Note:	**293740** Seal – Oil Used on Model 60331, 60332, 60431, 60432, 61331, 61431, 61432 Series. **294207** Oil Seal and Spacer Used on Model 60311, 60312, 60401, 60402, 61401, 61402 Series.
21	**66768**	Plug – Oil Filler
	Note:	**69345** Cap – Oil Filler Used on Model 60311, 60312, 60331, 60332, 60351, 60352, 60431, 60432, 61311, 61312, 61331, 61332, 61351, 61352, 61353, 61431, 61432 Series. Except with filler opposite carburetor side. Includes: **65304** Gasket– Oil Filler Cap Uses: **91258** Nipple – Oil Filler
22	**93032**	Screw – Crankcase Cover Mounting Sem
	Note:	**92747** Screw – Crankcase Cover Mounting Sem Used in two top holes to mount cover on Model 60311, 60312, 60351, 60352, 60401, 60402, 61311, 61312, 61351, 61352, 61353, 61401, 61402 Series.

‡ Included in Gasket Set – Part No. 297275

REF. NO.	PART NO.	DESCRIPTION
23	**295936**	Flywheel Assembly (Used before Serial No. 6212310)
	Note:	**293205** Flywheel Assy. Used before Serial No. 6212310 on type Nos. 942165, 942239, 942246, 942248.
23A	**296884**	Flywheel Assembly Used on and after Serial No. 6212310.
	Note:	**297949** Flywheel Assy. Used on Model 60300 Series type Nos. 0188, 0189.
24	**61760**	Key – Flywheel
25	**295587**	Piston Assembly – Std. (for 2-3/8" Bore) Used on Model 60300, 60400 Series after Serial No. 5810030.
	Note:	**293400** Piston Assy. – Std. (for 2-5/16" Bore) Used on Model 60300, 60400 Series before Serial No. 5810060. **295455** Piston Assy. – Std. (for 2-3/8" Bore) Used on Model 61300, 61400 Series after Serial No. 5810030. **295479** Piston Assy. – Std. (for 2-5/16" Bore) Used on Model 61300, 61400 Series before Serial No. 5810060.
	295588	Piston Assembly – .010" O. S. (for 2-3/8" Bore) Used on Model 60300, 60400 Series after Serial No. 5810030.
	Note:	**293401** Piston Assy. – .010" O. S. (for 2-5/16" Bore) Used on Model 60300, 60400 Series before Serial No. 5810060. **295456** Piston Assy. – .010" O. S. (for 2-3/8" Bore) Used on Model 61300, 61400 Series after Serial No. 5810030. **295480** Piston Assy. – .010" O. S. (for 2-5/16" Bore) Used on Model 61300, 61400 Series before Serial No. 5810060.

REF. NO.	PART NO.	DESCRIPTION
	295589	Piston Assembly – .020" O. S. (for 2-3/8" Bore) Used on Model 60300, 60400 Series after Serial No. 5810030.
	Note:	**293402** Piston Assy. – .020" O. S. (for 2-5/16" Bore) Used on Model 60300, 60400 Series before Serial No. 5810060. **295457** Piston Assy. – .020" O. S. (for 2-3/8" Bore) Used on Model 61300, 61400 Series after Serial No. 5810030. **295481** Piston Assy. – .020" O. S. (for 2-5/16" Bore) Used on Model 61300, 61400 Series before Serial No. 5810060.
	295590	Piston Assembly – .030" O. S. (for 2-3/8" Bore) Used on Model 60300, 60400 Series after Serial No. 5810030.
	Note:	**293403** Piston Assy. – .030" O. S. (for 2-5/16" Bore) Used on Model 60300, 60400 Series before Serial No. 5810060. **295458** Piston Assy. – .030" O. S. (for 2-3/8" Bore) Used on Model 61300, 61400 Series after Serial No. 5810030. **295482** Piston Assy. – .030" O. S. (for 2-5/16" Bore) Used on Model 61300, 61400 Series before Serial No. 5810060.
MODEL SERIES 60300, 60400 PISTON RING SETS:		
26	**294232**	Ring Set – Std. Piston Used on Model 60300, 60400 Series after Serial No. 5810030, consists of: **210471** Ring, Piston, Comp., Top **210472** Ring, Piston, Comp., Center **210473** Ring, Piston, Oil

Katolight Service - Master Repair Manual - Page 2479

REF. NO.	PART NO.	DESCRIPTION
	Note:	**293506** Ring Set – Standard Piston Used on Model 60300, 60400 Series before Serial No. 5810060, consists of: **210222** Ring, Piston, Compression, Top, Std. **210223** Ring, Piston, Compression, Center, Standard **210224** Ring, Piston, Oil, Standard
	294224	Ring Set – .010" O. S. Piston Used on Model 60300, 60400 Series after Serial No. 5810030, consists of: **210490** Ring, Piston, Compression, Top, .010" O. S. **210489** Ring, Piston, Compression, Center, .010" O. S. **210491** Ring, Piston, Oil, .010" O. S.
	Note:	**293507** Ring Set – .010" O. S. Piston Used on Model 60300, 60400 Series before Serial No. 5810060, consists of: **210361** Ring, Piston, Compression, Top, .010" O. S. **210362** Ring, Piston, Compression, Center, .010" O. S. **210363** Ring, Piston, Oil, .010" O. S.
	294225	Ring Set – .020" O. S. Piston Used on Model 60300, 60400 Series after Serial No. 5810030, consists of: **210493** Ring, Piston, Compression, Top, .020" O. S. **210492** Ring, Piston, Compression, Center, .020" O. S. **210494** Ring, Piston, Oil, .020" O. S.
	Note:	**293508** Ring Set – .020" O. S. Piston Used on Model 60300, 60400 Series before Serial No. 5810060, consists of: **210364** Ring, Piston, Compression, Top, .020" O. S. **210365** Ring, Piston, Compression, Center, .020" O. S. **210366** Ring, Piston, Oil, .020" O. S.
	294226	Ring Set – .030" O. S. Piston Used on Model 60300, 60400 Series after Serial No. 5810030, consists of: **210496** Ring, Piston, Compression, Top, .030" O. S. **210495** Ring, Piston, Compression, Center, .030" O. S. **210497** Ring, Piston, Oil, .030" O. S.
	Note:	**293509** Ring Set – .030" O. S. Piston Used on Model 60300, 60400 Series before Serial No. 5810060, consists of: **210367** Ring, Piston, Compression, Top, .030" O. S. **210368** Ring, Piston, Compression, Center, .030" O. S. **210369** Ring, Piston, Oil, .030" O. S.
	MODEL SERIES 61300, 61400 PISTON RING SETS:	
	295657	Ring Set – Std. Piston Used on Model 61300, 61400 Series after Serial No. 5810030, consists of: **210796** Ring, Piston, Compression, Top, Std. **210797** Ring, Piston, Compression, Center, Standard **295661** Ring, Oil (with expander), Standard
	Note:	**295649** Ring Set – Standard Piston Used on Model 61300, 61400 Series before Serial No. 5810060, consists of: **210788** Ring, Piston, Compression, Top, Standard **210789** Ring, Piston, Compression, Center, Standard **295653** Ring, Oil (with expander), Std.
	295658	Ring Set – .010" O. S. Piston Used on Model 61300, 61400 Series after Serial No. 5810030, consists of: **210799** Ring, Piston, Compression, Top, .010" O. S. **210798** Ring, Piston, Compression, Center, .020" O. S. **295662** Ring, Oil (with expander), .010" O. S.
	Note:	**295650** Ring Set – .010" O. S. Piston Used on Model 61300, 61400 Series before Serial No. 5810060, consists of: **210790** Ring, Piston, Compression, Top, .010" O. S. **210791** Ring, Piston, Compression, Center, .010" O. S. **295654** Ring, Oil (with expander), .010" O. S.
	295659	Ring Set – .020" O. S. Piston Used on Model 61300, 61400 Series after Serial No. 5810030, consists of: **210801** Ring, Piston, Compression, Top, .020" O. S. **210800** Ring, Piston, Compression, Center, .020" O. S. **295663** Ring, Oil (with expander), .020" O. S.
	Note:	**295651** Ring Set – .020" O. S. Used on Model 61300, 61400 Series before Serial No. 5810060, consists of: **210792** Ring, Piston, Compression, Top, .020" O. S. **210793** Ring, Piston, Compression, Center, .020" O. S. **295655** Ring, Oil (with expander), .020" O. S.

‡ Included in Gasket Set – Part No. 297275

Katolight Service - Master Repair Manual - Page 2480

REF. NO.	PART NO.	DESCRIPTION
	295660	Ring Set – .030" O. S. Piston Used on Model 61300, 61400 Series after Serial No. 5810030, consists of: **210803** Ring, Piston, Compression, Top, .030" O. S. **210802** Ring, Piston, Compression, Center, .030" O. S. **295664** Ring, Oil (with expander), .030" O. S.
	Note:	**295652** Ring Set – .030" O. S. Used on Model 61300, 61400 Series before Serial No. 5810060, consists of: **210794** Ring, Piston, Compression, Top, .030" O. S. **210795** Ring, Piston, Compression, Center, .030" O. S. **295656** Ring, Oil (with expander), .030" O. S.
27	**26026**	Lock – Piston Pin
28	**291925**	Pin Assembly – Piston – Standard
	291926	Pin Assembly – Piston – .005" O. S.
29	**294300**	Rod Assembly – Connecting
30	**220459**	Dipper – Conn. Rod
31	**220460**	Lock – Connecting Rod Screw
32	**92296**	Screw – Connecting Rod
33	**296676**	Valve – Exhaust (Grooved Stem – Includes Retainer No. 93312)
	Note:	**26973** Valve – Exhaust (With Hole in Stem) For Pins and Retainers for this valve see note under reference number 40. Used on Model 60300, 60400 Series type Nos. 0026, 0027, 0028, 0035, 0060, 0061, 0156, 942040, 942099, 942181, 942189, 942243; also used on Model 61300, 61400 Series type Nos. 0165, 942572, 942577, 942589, 942590, 942592, 942593, 942625, 942645.
		260075 Valve – Exhaust, Stellite (With Hole in Stem) For Pins and Retainers for this valve see note under reference number 40. Used on Model 60300, 60400 Series type Nos. 0016, 0159, 0161, 0188, 0189, 942049, 942062, 942072, 942101, 942109, 942143, 942152, 942154, 942155, 942162, 942165, 942170, 942184, 942217, 942239, 942244, 942246, 942248, 942263, 942274; also used on Model 61300, 61400 Series type Nos. 942535, 942547, 942559, 942562, 942602, 942603, 942618, 942624, 942644.
34	**296677**	Valve – Intake (Grooved Stem – Includes Retainer No. 93312)
	Note:	**23386** Valve – Intake (with Hole in Stem) Used on engines before Serial No. 5810060. **230101** Valve – Intake (with Hole in Stem) For Pins and Retainers for this valve and Part No. 23386 see note under reference number 40. Used on Model 60300, 60400 Series type Nos. 0016, 0159, 0161, 0188, 0189, 942049, 942062, 942072, 942101, 942109, 942143, 942152, 942154, 942155, 942162, 942165, 942170, 942184, 942217, 942239, 942244, 942246, 942248, 942263, 942274; also used on Model 61300, 61400 Series type Nos. 942535, 942547, 942559, 942562, 942602, 942603, 942618, 942624, 942644.
35	**260552**	Spring – Intake Valve
36	**26478**	Spring – Exhaust Valve
	Note:	**26826** Spring – Exhaust Valve Used on Model 60300, 60400 Series type Nos. 0026, 0027, 0028, 0035, 0060, 0061, 0156, 0159, 0161, 0188, 0189, 942040, 942049, 942062, 942072, 942099, 942101, 942143, 942152, 942154, 942155, 942165, 942170, 942181, 942184, 942189, 942217, 942239, 942243, 942246, 942248, 942263, 942274; also used on Model 61300, 61400 Series type Nos. 0165, 942535, 942547, 942572, 942577, 942589, 942590, 942592, 942593, 942624, 942625, 942644, 942645.
40	**93312**	Retainer – Valve Spring Used with valves with groove in stem.
	Note:	**23184** Retainer – Valve Spring **23187** Pin – Valve Spring Retainer Used with valves with hole in stem, except those with Rotocap. **292259** Rotocap – Exhaust Valve Uses: **230126** Pin – Exhaust Valve Rotocap Retainer **230127** Retainer – Exhaust Valve Rotocap Used on Model 60300, 60400 Series type Nos. 0026, 0027, 0028, 0035, 0060, 0061, 0156, 0159, 0161, 0188, 0189, 942040, 942049, 942062, 942072, 942099, 942101, 942143, 942152, 942154, 942155, 942165, 942170, 942181, 942184, 942189, 942217, 942239, 942243, 942246, 942248, 942263, 942274; also used on Model 61300, 61400 Series type Nos. 0165, 942535, 942547, 942572, 942577, 942589, 942590, 942592, 942593, 942624, 942625, 942644, 942645.
45	**230173**	Tappet – Valve
46	**210453**	Gear – Cam
50	**210201**	Elbow – Intake
51	**‡†68987**	Gasket – Carburetor Mounting
52	**†27355**	Gasket – Intake Elbow Mounting

‡ Included in Gasket Set – Part No. 297275

† Included in Carburetor Overhaul Kit – Part No. 291691

Katolight Service - Master Repair Manual - Page 2481

REF. NO.	PART NO.	DESCRIPTION
	Note:	**27384** Gasket – Intake Elbow Mounting Used on Model 60300, 60400 Series type Nos. 942144, 942148; also used on Model 61300, 61400 Series type No. 942609.
53	93329	Screw – Carburetor and Intake Elbow Mtg. Sem
	Note:	**93170** Screw – Intake Elbow Mounting Sem **93028** Washer – Lock – Shakeproof No. 1114-00 Used on Model 60300, 60400 Series type Nos. 942144, 942148; also used on Model 61300, 61400 Series type No. 942609.
56	294088	Pulley – Rewind Starter
57	294303	Spring – Rewind Starter
58	66384	Rope – Starter 47-1/8" long
	Note:	If longer rope is needed, order No. 66514 and cut to required length.
59	230228	Pin – Starter Grip
60	66728	Grip – Starter Rope
61	66528	Bumper – Starter Pulley
66	296468	Clutch Assembly – Rewind and Wind-up Starter
	Note:	**290221** Clutch Assy. – Starter Used on type No. 942155 with: **291230** Starter Assy. – Foot Uses: **89363** Sector **99632** Tooth – Spring **26025** Spring – Pedal Return
67	210400	Housing – Starter Clutch
	Note:	**291017** Housing – Starter Clutch Used on type No. 942155. Uses: **91758** Screw – Set
68	63770	Ball – Clutch
70	296597	Ratchet – Rewind and Wind-up Starter
	Note:	**23388** Ratchet – Foot Starter Used on type No. 942155.
71	221301	Washer – Clutch Retainer (Used with square shank ratchet)
	Note:	**220575** Washer – Clutch Retainer (Used with 7 point shank ratchet) **22182** Washer – Clutch Retainer Used on type No. 942155.
72	26032	Spring – Clutch Retainer
73	220648	Screen – Starter Pulley
74	93042	Screw – Rotating Screen Mounting Sem
75	220865	Washer – Spring (Used to lock windup and rewind starter clutch)
78	93014	Screw – Pulley Screen Mounting Sem
79	290779	Case Assembly – Gear
80	27667	Gasket – Gear Case
81	220234	Lock – Gear Case Mounting Sem
82	91541	Screw – Cap, Hex. Hd. – 5/16-24 x 7/8"
	Note:	Use: **92279** Screw, Cap, Hex. Hd. – 5/16-24 x 1-1/2" on inside of gear case to mount same to crankcase.
83	290802	Shaft Assy. – Drive
	Note:	**293272** Shaft Assembly – Drive Used on Model 60300, 60400 Series type Nos. 942056, 942079; also used on Model 61300, 61400 Series type Nos. 942605, 942606. **293582** Shaft Assembly – Drive Used on type No. 942526. Order – Shaft Assy. – Drive Used on type Nos. 942111, 942201. From the equipment manufacturer.
84	92617	Plug – Breather
85	92747	Screw – Gear Case Mounting Sem
86	291730	Cover Assembly – Gear Case
87	19011	Seal – Oil
88	27313	Gasket – Gear Case Cover
89	91744	Plug – Headless, 1/4" Pipe Thread (Used after Serial No. 6304170)
	Note:	**92015** Plug – Headless (Used before Serial No. 6304180) **91488** Plug – Pipe, 1/8", Square Head Used on type No. 942526. **92015** Plug – Headless **92961** Elbow – Street, 1/8", 90° Used on type No. 942121.
90	294311	Carburetor Assembly (Manual Choke)
	Note:	**294075** Carburetor Assy. (Manual Choke – Mechanical Governor) Used on Model 60400 Series type Nos. 0050, 0060, 0061, 0132, 0133, 0140, 0141, 0163, 942019, 942020, 942021, 942022, 942043, 942054, 942055, 942067, 942070, 942071, 942089, 942097, 942099, 942119, 942136, 942140, 942150, 942159, 942181, 942184, 942211, 942213, 942215, 942217, 942220, 942233, 942261; also used on Model 61400 Series type Nos. 0154, 0158, 942519, 942520, 942521, 942522, 942570, 942581, 942591, 942596, 942598, 942607, 942608, 942614, 942615, 942616, 942628, 942629, 942638, 942642, 942643, 942644, 942645. **294089** Carburetor Assy. (Mechanical Governor – Kerosene) Used on Model 60400 Series type No. 942170. **294456** Carburetor Assy. (Remote Choke) Used on Model 60300 Series type Nos. 942152, 942155. **294607** Carburetor Assy. (Mechanical Governor - Automatic Choke) Used on Model 60400 Series type Nos. 942144, 942148; also used on Model 61400 Series type No. 942609. **294671** Carburetor Assy. (Kerosene)

‡ Included in Gasket Set – Part No. 297275

Katolight Service - Master Repair Manual - Page 2482

REF. NO.	PART NO.	DESCRIPTION
		Used on Model 60300 Series type Nos. 0182, 0200, 942074, 942095, 942096, 942117, 942151, 942174; also used on Model 61300 Series type Nos. 0150, 0152, 0156, 942557, 942564, 942573, 942593, 942630, 942635, 942636.
		295613 Carburetor Assy. (L. P. Gas) Used on Model 60300 Series type Nos. 0193, 942062, 942162, 942244; also used on Model 61300 Series type Nos. 942559, 942602, 942618.
		296108 Carburetor Assy. (Remote Choke – Mechanical Governor) Used on Model 60400 Series type Nos. 0188, 0189, 942165, 942239, 942246, 942248.
		297031 Carburetor Assy. (Choke-A-Matic) Used on Model 60300 Series type Nos. 0173, 0183, 0184, 0196, 942231, 942265, 942266, 942267, 942273; also used on Model 61300 Series type Nos. 942646, 942647, 942650, 942656.
		297914 Carburetor Assy. (Choke-A-Matic) Used on Model 60300 Series type No. 0194, 942256.
91	294312	Housing Assembly – Throttle
	Note:	**89495** Housing Assy. – Throttle (Mechanical Governor) Used on Model 60400 Series type Nos. 0050, 0060, 0061, 0132, 0133, 0140, 0141, 0163, 0189, 942019, 942020, 942021, 942022, 942043, 942054, 942055, 942067, 942070, 942071, 942089, 942097, 942099, 942119, 942136, 942140, 942144, 942148, 942150, 942159, 942165, 942170, 942181, 942184, 942211, 942213, 942215, 942217, 942220, 942233, 942239, 942246, 942248, 942261; also used on Model 61400 Series type Nos. 0154, 0158, 942519, 942520, 942521, 942522, 942570, 942581, 942591, 942596, 942598, 942607, 942608, 942609, 942614, 942615, 942616, 942628, 942629, 942638, 942642, 942643, 942644, 942645.
		298146 Housing Assy. – Throttle Used on Model 60300 Series type Nos. 0173, 0183, 0184, 0194, 0196, 942231, 942256, 942265, 942266, 942267, 942273; also used on Model 61300 Series type Nos. 942646, 942647, 942650, 942656.
92	99634	Body – Upper Carburetor
94	292681	Valve Assembly – Carburetor Idle
95	93038	Screw – Throttle Valve Mounting Sem
96	22036	Valve – Throttle
97	293907	Shaft and Lever – Throttle
	Note:	**99868** Shaft and Lever – Throttle (Mechanical Governor) Used on Model 60400 Series type Nos. 0050, 0060, 0061, 0132, 0133, 0140, 0141, 0163, 0189, 942019, 942020, 942021, 942022, 942043, 942054, 942055, 942067, 942070, 942071, 942089, 942097, 942099, 942119, 942136, 942140, 942144, 942148, 942150, 942159, 942165, 942170, 942181, 942184, 942211, 942213, 942215, 942217, 942220, 942233, 942239, 942246, 942248, 942261; also used on Model 61400 Series type Nos. 0154, 0158, 942519, 942520, 942521, 942522, 942570, 942581, 942591, 942596, 942598, 942607, 942608, 942609, 942614, 942615, 942616, 942628, 942629, 942638, 942642, 942643, 942644, 942645, 942656.
		296988 Shaft and Lever – Throttle Used on Model 60300 Series type Nos. 0173, 0183, 0184, 0194, 0196, 942231, 942256, 942265, 942266, 942267, 942273; also used on Model 61300 Series type Nos. 942646, 942647, 942650, 942656.
98	91920	Screw – Machine, Fill. Hd. – 8-32 x 5/8"
99	†26157	Spring – Throttle Adjustment
101	93043	Pin – Throttle Stop and Gov. Shaft
102	†27917	Gasket – Carburetor Body
104	†23114	Pin – Float Hinge
107	293515	Body Assembly – Carburetor
	Note:	**294431** Body Assembly – Carburetor Used on Model 60300, 60400 Series type Nos. 0188, 0189, 942152, 942155, 942165, 942239, 942246, 942248.
		294608 Body Assembly – Carburetor Used on Model 60400 Series type Nos. 942144, 942148; also used on Model 61400 Series type No. 942609.
		297032 Body Assembly – Carburetor Used on Model 60300 Series type Nos. 0173, 0183, 0184, 0196, 942231, 942265, 942266, 942267, 942273; also used on Model 61300 Series type Nos. 942646, 942647, 942650, 942656.
		297915 Body Assembly – Carburetor Used on Model 60300 Series type Nos. 0194, 942256.
108	220897	Valve – Choke
	Note:	**22050** Valve – Choke (with hole) Used on Model 60300, 60400 Series type Nos. 0173, 0183, 0184, 0188, 0189, 0194, 0196, 942152, 942155, 942165, 942231,

‡ Included in Gasket Set – Part No. 297275

† Included in Carburetor Overhaul Kit – Part No. 291691

Katolight Service - Master Repair Manual - Page 2483

REF. NO.	PART NO.	DESCRIPTION
		942239, 942246, 942248, 942256, 942265, 942266, 942267, 942273; also used on Model 61300, 61400 Series type Nos. 942646, 942647, 942650, 942656.
		Uses: **93038** Screw (for mounting)
		22876 Valve – Choke (with holes)
		Used on Model 60400 Series type Nos. 942144, 942148; also used on Model 61400 Series type No. 942609.
		Uses: **93038** Screw (for mounting)
109	294874	Shaft and Lever Assy. – Choke
	Note:	**23252** Shaft – Choke
		Used on Model 60300, 60400 Series type Nos. 0188, 0189, 942152, 942155, 942165, 942239, 942246, 942248.
		Uses: **99679** Lever (with swivel)
		Includes: **26228** Spring – Return
		92017 Screw – Swivel
		93347 Screw – Lever Mtg.
		294489 Shaft, Lever and Vane Assembly – Automatic Choke
		Used on Model 60400 Series type Nos. 942144, 942148; also used on Model 61400 Series type No. 942609.
		Uses: **291040** Lever and Weight Assy.
		Includes: **90200** Screw (for mounting)
		295574 Shaft – Choke
		Used on Model 60300 Series type Nos. 0173, 0183, 0184, 0194, 0196, 942231, 942256, 942265, 942266, 942267, 942273; also used on Model 61300 Series type Nos. 942646, 942647, 942650, 942656.
110	220899	Washer – Choke Lever
111	26229	Spring – Choke Lever
	Note:	**260396** Spring – Choke Return
		Used on Model 60300 Series type Nos. 0173, 0183, 0184, 0194, 0196, 942231, 942256, 942265, 942266, 942267, 942273; also used on Model 61300 Series type Nos. 942646, 942647, 942650, 942656.
112	‡23270	Screw – Choke Lever
113	†23222	Nozzle – Carburetor
114	†68887	Packing – Needle Valve
117	†23227	Nut – Needle Valve Packing
118	230005	Valve – Needle
	Note:	**292088** Valve – Needle
		Used on Model 60300, 60400 Series type Nos. 0182, 0200, 942074, 942095, 942096, 942117, 942151, 942170, 942174; also used on Model 61300, 61400 Series type Nos. 0150, 0152, 0156, 942557, 942564, 942573, 942593, 942630, 942635, 942636.
119	93347	Screw – Throttle Housing and Fuel Pump Head Mounting Sem
120	92290	Washer – Lock – No. 10 x 1/16 x 3/64"
121	291691	Carburetor Overhaul Kit
127	220352	Plug – Welch
128	21216	Venturi – Carburetor
129	23230	Bushing – Throttle Shaft
132	61967	Stop – Throttle Lever
	Note:	**295804** Stop – Throttle Lever
		Used on Model 60300 Series type Nos. 0173, 0183, 0184, 0194, 0196, 942231, 942256, 942265, 942266, 942267, 942273; also used on Model 61300 Series type Nos. 942646, 942647, 942650, 942656.
133	293477	Float – Carburetor
134	†293478	Valve and Seat – Fuel Inlet
135	68877	Gasket – Fuel Inlet Valve Seat
157	68897	Gasket – Venturi
158	27590	Filter – Carburetor Drain
159	220521	Retainer – Carburetor Drain Filter
160	294868	Cleaner Assembly – Air (with mounting stud)
	Note:	**293517** Cleaner Assy. – Air (without mounting stud)
		Used on type No. 942535.
		Uses: **230238** Stud
		92067 Nut – Wing
		296098 Cleaner – Air
		Used on type No. 942170.
161	293991	Bowl – Air Cleaner
162	294863	Cover and Filter – Air Cleaner (with mounting stud)
	Note:	**292037** Cover and Filter – Air Cleaner (without mounting stud)
		Used on type No. 942535.
163	‡27660	Gasket – Air Cleaner Mounting
	Note:	**27603** Gasket – Air Cleaner Mounting
		Used on type No. 942170.
164	210534	Elbow – Air Cleaner
165	92067	Nut – Wing
166	230238	Stud – Air Cleaner
	Note:	**63949** Stud – Air Cleaner
		Used on Model 60300 Series type Nos. 0173, 0183, 0184, 0194, 0196, 942256, 942265, 942266, 942267, 942273; also used on Model 61300 Series type No. 942656.
		230519 Stud – Air Cleaner
		Used on Model 61300 Series type No. 942526.
		230361 Stud – Air Cleaner
		230408 Spacer – Air Cleaner
		Used on Model 60400 Series type Nos. 942165, 942170; also used on Model 61300 Series type No. 942551.
169	90832	Washer – Lock – 1/4 x 3/32 x 5/64"
	Note:	**92778** Washer – Lock (Shakeproof)
		Used to mount tank to bracket on Model 60300, 60400 Series type Nos. 942152, 942155, 942170, 942193.
171	92129	Nut – Hex. – 1/4-28
172	27795	Gasket – Air Cleaner
173	99395	Arrestor – Flame
174	27423	Gasket – Flame Arrestor Mounting
175	23215	Spacer – Flame Arrestor
176	27603	Gasket – Air Cleaner Elbow

‡ Included in Gasket Set – Part No. 297275

† Included in Carburetor Overhaul Kit – Part No. 291691

Katolight Service - Master Repair Manual - Page 2484

REF. NO.	PART NO.	DESCRIPTION
180	292944	Tank Assembly – Fuel (2 Qt.)
	Note:	Fuel Tank used on Model 60300, 60400 Series type Nos. 942062, 942162, 942170, 942217; also on Model 61300, 61400 Series type Nos. 942559, 942591, 942602, 942608 is supplied by equipment manufacturer.
		292945 Tank Assembly – Fuel (3 Qt.) Used on Model 60300, 60400 Series type Nos. 0025, 0154, 942032, 942034, 942037, 942038, 942043, 942067, 942070, 942085, 942094, 942118, 942122, 942141, 942144, 942150, 942202, 942216, 942220, 942236, 942251, 942257, 942261; also used on Model 61300, 61400 Series type Nos. 0160, 0163, 942531, 942539, 942551, 942560, 942565, 942569, 942570, 942584, 942609, 942617, 942632, 942637, 942638, 942642, 942654.
181	69221	Cap – Fuel Tank
182	220195	Bracket – Fuel Tank
186	66111	Connector – Fuel Pipe (Imperial Brass Co. No. 69-F)
187	293672	Pipe – Fuel
	Note:	**89663** Pipe – Fuel Used on type No. 942108.
		99738 Pipe – Fuel Used on type No. 942178.
		291128 Pipe – Fuel – 13-1/4" long Used on type No. 942114.
		294323 Pipe – Fuel Used on Model 60300, 60400 Series type Nos. 0025, 942032, 942034, 942037, 942043, 942094, 942122, 942202; also used on Model 61300, 61400 Series type Nos. 0160, 942539, 942565, 942569, 942570, 942584, 942617, 942632, 942637.
		294393 Pipe – Fuel Used on Model 60300 Series type Nos. 942102, 942121, 942161, 942196, also used on Model 61300 Series type Nos. 942549, 942561, 942563.
		The following pipes and fittings are used on Model 60300, 60400 Series type Nos. 0182, 0200, 942074, 942095, 942096, 942117, 942151, 942174; also used on Model 61300, 61400 Series type Nos. 0150, 0152, 0156, 942557, 942564, 942573, 942593, 942630, 942635, 942636.
		294530 Pipe – Fuel (short)
		294531 Pipe – Fuel (long)
		292486 Wing Plug, Chain and Clip Assy.
		99511 Tee (Imperial Brass Co. No. 72-F)
		92713 Coupling
		294553 Pipe – Fuel Used on type No. 942148.
		294604 Pipe – Fuel Used on Model 60300, 60400 Series type Nos. 942045, 942046, 942087; also used on Model 61300, 61400 Series type Nos. 0162, 942568, 942571, 942578, 942579, 942659.
		294725 Pipe – Fuel Used on type No. 942645.
		295050 Pipe – Fuel Used on Model 60300, 60400 Series type Nos. 942038, 942144, 942150, 942228, 942255, 942260; also used on Model 61400 Series type Nos. 942609, 942642.
		Uses: **230317** Connector (at tank valve) **230318** Connector (at carburetor)
189	90366	Washer – Lock – 5/16 x 1/8 x 1/16"
195	91635	Connector – Fuel Filter
196	220358	Support – Fuel Tank
	Note:	**220369** Support – Fuel Tank Used on Model 60300, 60400 Series type Nos. 0154, 942038, 942067, 942070, 942085, 942118, 942141, 942220, 942236, 942251, 942255, 942257, 942261; also used on Model 61300, 61400 Series type Nos. 0163, 942531, 942551, 942560, 942632, 942638, 942654.
		220607 Support – Fuel Tank Used on Model 60300, 60400 Series type Nos. 0025, 942032, 942034, 942037, 942043, 942094, 942122, 942144, 942150, 942202; also used on Model 61300, 61400 Series type Nos. 0160, 942539, 942565, 942569, 942570, 942584, 942609, 942617, 942637, 942642.
		220755 Support – Fuel Tank Used on Model 60300 Series type Nos. 942102, 942121, 942161, 942196; also used on Model 61300 Series type Nos. 942549, 942561, 942563.
197	93083	Screw – Tank Mtg. Sem
198	293934	Valve – Fuel Shut-Off
199	292797	Outlet – Fuel Tank (includes strainer)
200	294617	Blade – Governor (Used on Model 60300, 61300 Series before Serial No. 6212310)
	Note:	**220692** Guide – Air Used before Serial No. 6212310 on Model 60400, 61400 Series.
200A	297309	Blade – Governor Used on Model 60300, 61300 Series on and after Serial No. 6212310.
	Note:	**221456** Guide – Air Used on Model 60400, 61400 Series on and after Serial No. 6212310.
201	26235	Link – Governor
	Note:	**260076** Link – Governor Used on Model 60400, 61400 Series.
		Uses: **260178** Spring
204	23688	Bushing – Gov. Lever
206	230149	Nut – Control Rod
	Note:	**21772** Nut – Control Rod Used on type No. 942561.
207	26855	Spring – Control Rod
208	230194	Rod – Control

‡ Included in Gasket Set – Part No. 297275

Katolight Service - Master Repair Manual - Page 2485

REF. NO.	PART NO.	DESCRIPTION
	Note:	**230323** Rod – Control Used on Model 60400, 61400 Series. **230367** Rod – Control (Automatic Choke) Used on Model 60400 Series type Nos. 942144, 942148; also used on Model 61400 Series type No. 942609.
209	26925	Spring – Governor
	Note:	**260546** Spring – Mechanical Governor Used on Model 60400, 61400 Series. **260413** Spring – Gov. Used on Model 60300 Series type Nos. 0173, 0183, 0184, 0194, 0196, 942231, 942256, 942264, 942266, 942267, 942273; also used on Model 61300 Series type Nos. 942646, 942647, 942650, 942656.
219	296688	Governor Housing and Gear Assembly
220	221361	Washer – Thrust (.030" thick)
	Note:	**220673** Washer – Thrust (1/16" thick) Used on engines before Serial No. 6104010.
221	230177	Cup – Governor
222	220691	Bracket – Mechanical Governor
	Note:	**294476** Bracket and Baffle – Mechanical Gov. Used on Model 60400 Series type Nos. 0061, 942043, 942055, 942070, 942097, 942119, 942144, 942148, 942150, 942181, 942184; also used on Model 61400 Series type Nos. 942570, 942642, 942643, 942644.
223	220690	Lever – Mechanical Governor
224	93067	Screw – Governor Lever Mounting Sem
225	230181	Shaft – Governor Lever
226	220381	Follower – Gov. Crank
227	294077	Lever Assy. – Governor
228	93100	Screw – Governor Lever Mounting
229	220680	Washer – Thrust
230	22826	Washer – Spacer
231	93064	Screw – Gov. Housing to Crankcase Cover Mounting Sem
232	260178	Spring – Governor Link
233	230253	Stop – Control Rod
234	220730	Clip – Control Rod
240	89346	Filter Assembly – Fuel
241	89347	Cover Assembly – Fuel Filter
242	295913	Lever – Fuel Shut-Off
243	22547	Screen – Fuel Filter
244	92427	Connector – Fuel Pipe
	Note:	**67218** Conn. – Fuel Pipe (at carburetor) **230317** Connector – Fuel Pipe (at tank) Used on Model 60300 Series type Nos. 0194, 942256. **230317** Connector – Fuel Pipe (at tank) **230318** Connector – Fuel Pipe (at carburetor) Used on Model 60300, 60400 Series type Nos. 0195, 942038, 942144, 942150, 942255, 942260; also used on Model 61400 Series type Nos. 942609, 942642. **230318** Connector – Fuel Pipe Used on type No. 942264.
245	68477	Gasket – Fuel Filter Bowl
246	68487	Bowl – Fuel Filter
247	99665	Yoke – Fuel Filter
258	93062	Screw – Sem
259	294502	Bracket – Control Wire Casing
260	295756	Housing – Speed Control
261	93105	Screw – Speed Control Housing Mounting Sem
262	93394	Screw – Speed Control Housing Mounting Sem
264	90355	Nut – Hex. – 10-32
265	22372	Clamp – Casing
266	290062	Control – Throttle
	Note:	**290463** Control – Throttle Used on type Nos. 942075, 942187.
267	90080	Screw – Machine, Rd. Hd. – 10-32 x 7/16"
268	66986	Casing – Control Wire – 48" Long
	Note:	If a longer casing is needed, specify length in inches if a shorter casing is needed order No. 66986 and cut to required length.
269	26099	Wire – Control – 54" Long
	Note:	If longer wire is needed, specify length by inches; if shorter wire is needed order No. 26099 and cut to required length.
270	63426	Locknut – Control Wire Casing
271	290568	Lever Assy. – Control
272	290584	Base – Control Lever
273	290642	Lever – Control
274	91237	Washer – Lock – 1-4 x 3/32 x 3/64"
275	92287	Screw – Machine, Rd. Hd. – 10-32 x 1/4"
276	22834	Washer – Spacer
277	22368	Washer – Control Lever
278	22725	Washer – Control Lever
279	92306	Screw – Cap, Hex. Hd. – 1/4-28 x 5/8"
281	221090	Bracket – Top Speed Control Mounting
285	26687	Link – Choke
286	294491	Thermostat Assembly
287	90050	Screw – Machine, Rd. Hd. – 6-32 x 1/4"
288	90362	Washer – Lock – No. 6 x 3/64 x 1/32"
289	23886	Support – Thermostat Shaft (Outer)
290	294492	Bracket and Tube – Thermostat
291	26594	Thermostat
292	23885	Support – Thermostat Shaft (Inner)
293	23884	Stop – Thermostat Shaft
294	92678	Screw – Set, Socket Head – 6-32 x 5/16"
295	230365	Shaft – Thermostat
296	291044	Lever Assembly – Thermostat
297	91811	Locknut – Exhaust Elbow
298	220859	Locknut – Muffler and Exhaust Elbow
299	294441	Muffler – Exhaust
300	89966	Muffler – Exhaust
	Note:	**89945** Muffler – Exhaust Used on Model 60300 Series type Nos. 942111, 942201, 942239. **292054** Muffler – Exhaust Used on Model 60300, 60400 Series type Nos. 942025, 942026, 942084, 942105, 942169, 942176, 942180, 942228, 942244, 942260; also used on Model 61300, 61400 Series type Nos. 942537, 942558; 942585, 942618. **295905** Muffler – Exhaust

‡ Included in Gasket Set – Part No. 297275

Katolight Service - Master Repair Manual - Page 2486

REF. NO.	PART NO.	DESCRIPTION
		Used on Model 60300 Series type Nos. 942032, 942191, 942258, 942264, 942269.
303	91810	Elbow – Exhaust (45° Street)
	Note:	**91812** Elbow – Exhaust (90° Street) Used on Model 60300, 60400 Series type Nos. 0016, 0153, 0161, 0180, 0195, 942049, 942062, 942091, 942109, 942114, 942143, 942147, 942149, 942161, 942162, 942168, 942172, 942175, 942206, 942231, 942250, 942255, 942268, 942274; also used on Model 61300, 61400 Series type Nos. 942529, 942535, 942559, 942562, 942603, 942647.
304	294260	Housing – Blower (for Rewind Starter)
	Note:	**220870** Housing – Blower (for Rope Starter) Used on Model 60300, 60400 Series type Nos. 0061, 942043, 942055, 942070, 942097, 942119, 942144, 942148, 942150, 942181, 942184, 942215; also used on Model 61300, 61400 Series type Nos. 942570, 942608, 942609, 942642, 942643, 942644. **294263** Housing – Blower (for Rope Starter) Used on Model 60301, 60311, 60331, 60351, 60401, 60431, 61301, 61311, 61331, 61351, 61401, 61431 Series. **294338** Housing – Blower (for Rewind Starter) Used on Model 60300, 60400 Series type Nos. 942156, 942158, 942258; also used on Model 61300, 61400 Series type Nos. 942526, 942527. **295190** Blower Housing and Brackets Assembly (for Electric Starter) Used on Model 60303, 61303, 61353 Series. **295816** Housing – Blower (for Rewind Starter) Used on Model 60300 Series type Nos. 942176, 942225. **296792** Housing – Blower (for Wind-up Starter) Used on Model 60306, 60406, 61306, 61406 Series.
305	93158	Screw – Blower Housing Mounting
	Note:	**92666** Screw – Cap **92778** Washer – Lock Used on Model 60300 Series type Nos. 942152, 942155, 942170, 942193, 942215, 942217, 942248.
306	220478	Shield – Cylinder
307	93042	Screw – Cylinder Shield Mounting Sem
308	220581	Cover – Cylinder Head
	Note:	**220354** Cover – Cylinder Head Used on Model 60300, 60400 Series type Nos. 0182, 0200, 942074, 942095, 942096, 942117, 942145, 942151, 942162, 942174; also used on Model 61300, 61400 Series type Nos. 0150, 0152, 0156, 942535, 942557, 942559, 942562, 942564, 942573, 942593, 942630, 942635, 942636.
309	295188	Motor – Electric Starter
310	93239	Bolt – Case
311	295697	Brush – Starter Motor
312	260404	Spring – Brush
321	210711	Pulley – Starter
	Note:	When ordering this pulley, order No. 67228 Vee Belt also.
323	67228	Belt – Vee
	Note:	**67038** Belt – Vee Used on engines before Serial No. 5905040.
324	220648	Screen – Electric Starter Pulley
325	293959	Starter Pulley with Screen (Rope Starter)
	Note:	**220547** Pulley – Rope Starter Used on type No. 942155.
328	221038	Guard – Belt
329	93014	Screw – Belt Guard Mounting Sem
330	29878	Rope – Starter
	Note:	**69932** Rope – Starter Used on Model 60300 Series type Nos. 0175, 942207.
331	62577	Washer – Flywheel
332	91708	Nut – Flywheel
333	291617	Armature – Magneto Used on all engines, except those under note, before serial No. 6212310. Also used on all type No. 942246 engines.
	Note:	**295680** Armature – Magneto Used on Model 60300, 60400 Series type Nos. 942152, 942155, 942170, 942193, 942215, 942217, 942248, 942253. Uses: **66298** Bushing – Spark Plug Term. **92704** Terminal – Spark Plug **295179** Shielding – Cable **295915** Armature – Magneto Used on all Model 60300 Series type Nos. 942062, 942109, 942138, 942162; also used on Model 61300 Series type Nos. 942559, 942562, 942602.
333A	297307	Armature – Magneto (Used on and after Serial No. 6212310)
	Note:	**298274** Armature – Magneto Used on Model 60300 Series type Nos. 0161, 0188, 942274.
334	93381	Screw – Armature Mounting Sem
335	93381	Screw – Coil Lead Mounting Sem
	Note:	**92984** Screw – Coil Lead and Armature Mounting Sem Used on Model 60300, 60400 Series type Nos. 942152, 942155, 942170, 942193, 942215, 942217, 942248, 942253.
336	292149	Cable – Ignition (Standard – Used before Serial No. 6212310 – Cables used after this serial number are integral with the ignition coil.) Also used on all type No. 942246 engines.
	Note:	**293141** Cable – Ignition Used on Model 60300,

‡ Included in Gasket Set – Part No. 297275

† Included in Carburetor Overhaul Kit – Part No. 291691

Katolight Service - Master Repair Manual - Page 2487

REF. NO.	PART NO.	DESCRIPTION
		60400 Series type Nos. 942152, 942155, 942170, 942193 before Serial No. 6004210.
		294321 Cable – Ignition Used on type Nos. 942049, 942143.
		294519 Cable – Ignition Used on type No. 942203.
		294577 Cable – Ignition Used before Serial No. 6210011 on Model 60300, 60400 Series type Nos. 942038, 942043, 942055, 942067, 942070, 942088, 942099, 942100, 942110, 942119, 942126, 942140, 942144, 942146, 942150, 942159, 942178, 942181, 942242; also used on Model 61300, 61400 Series type Nos. 942526, 942544, 942567, 942570, 942581, 942591, 942608, 942609, 942622, 942628, 942638, 942642.
337	29693	Plug – Spark (with gasket)
	Note:	**292519** Plug – Spark (with gasket) Used on Model 60300, 60400 Series type Nos. 942152, 942155, 942170, 942193, 942215, 942217, 942248.
		293918 Plug – Spark (with gasket) Used on Model 60300, 60400 Series type Nos. 0162, 0163, 0168, 942035, 942071, 942135, 942136, 942148, 942154, 942220, 942230; also used on Model 61300, 61400 Series type Nos. 942547, 942645.
338	29806	Gasket – Spark Plug
340	26018	Spring – Breaker Arm
341	93381	Screw – Contact Finger Post Mounting Sem
342	65704	Plunger – Breaker Point
344	93042	Screw – Condenser Clamp Mounting Sem
345	220366	Cover – Breaker Point and Condenser
346	93014	Screw – Dust Cover Mounting Sem
347	220884	Switch – Stop
348	67118	Block – Stop Switch
349	221077	Blade – Switch
350	221078	Clamp – Switch Blade
351	93218	Screw – Stop Switch

‡ Included in Gasket Set – Part No. 297275

REF. NO.	PART NO.	DESCRIPTION
352	66068	Washer – Insulating
353	92791	Washer – Lock – Shakeproof
354	90576	Nut – Hex. – 8-32
356	296185	Wire – Ground
	Note:	**295903** Wire – Ground Used on Model 60300 Series type Nos. 0173, 0183, 0184, 0194, 0196, 942231, 942266, 942267, 942273; also used on Model 61300 Series type Nos. 942650, 942656.
357	91539	Key – 3/16" Square -
358	297275	Gasket Set
362	291630	Shield – Spark Plug (with stop switch)
	Note:	**89742** Shield – Spark Plug Used on type Nos. 942088, 942146.
363	19069	Puller – Flywheel (Optional Accessory)
364	295698	Plug – Connector
365	93241	Screw – Plug Mtg. (long)
366	93240	Screw – Plug Mtg. (short)
367	91183	Screw – Cap, Hex. Hd. – 1/4-28 x 5/8"
369	220705	Spring – Control Friction
370	66432	Washer – Plain
371	260275	Restrictor – Belt
372	220477	Clamp – Condenser
373	92987	Nut – Condenser Term.
374	92813	Washer – Lock – Shakeproof No. 1210-06.
375	294628	Breaker Points and Condenser Set
378	‡22032	Washer – Needle Valve Packing
379	22984	Cover – Fuel Pump Hole
380	62199	Washer – Plain
381	91419	Screw – Cap, Hex. Hd. – 1/4-20 x 5/8"
382	92666	Screw – Cap, Hex. Hd. – 1/4-20 x 1/2"
	Note:	**92636** Screw – Cap, Hex. Hd. – 1/4-20 x 2" **230352** Spacer Used on Model 60300, 60400 Series type Nos. 0025, 942032, 942034, 942037, 942043, 942094, 942122, 942144, 942150, 942202; also used on Model 61300, 61400 Series type Nos. 0160, 942539, 942565, 942569, 942570, 942584, 942609, 942617, 942632, 942637, 942642.
383	89838	Wrench – Spark Plug
384	62899	Washer – Thermostat

REF. NO.	PART NO.	DESCRIPTION
385	93110	Screw – Fuel Pump Hole Cover and Spacer Mtg.
386	27314	Gasket – Cover and Fuel Pump Mounting
387	290465	Pump Assy. – Fuel
388	22735	Lever – Fuel Pump
389	23783	Pin – Fuel Pump Lever
390	26587	Spring – Fuel Pump Lever
391	21695	Body – Fuel Pump
392	26588	Spring – Fuel Pump Diaphragm
393	22740	Screen – Fuel Pump Filter
394	290622	Diaphragm – Fuel Pump
395	290623	Valve Fuel Pump
396	66204	Gasket – Fuel Pump Valve
397	21694	Head – Fuel Pump
398	210533	Spacer – Fuel Pump Mtg.
399	27699	Gasket – Spacer
400	230010	Wrench – Socket Screw
401	21927	Spacer – Carb. Elbow
	Note:	Used only on engines equipped with automatic choke.
455	296455	Cup, Hub and Spring Assembly
456	221222	Plate – Retainer
458	296305	Handle Assy. – Cranking
458	221332	Pawl – Ratchet
460	93272	Retainer – Ratchet Pawl
461	93231	Screw – Handle Mtg.
462	221237	Washer – Handle Mtg.
463	296445	Holder Assy. – Flywheel
464	93291	Rivet – Holder Assy. Mounting
465	221226	Washer – Holder Assy. Mounting
466	93272	Retainer – Holder Control Knob
467	211017	Knob – Control
506	90200	Screw – Machine Fil. Hd. – 8-32 x 1/2"
507	66895	Insulator – Terminal
	Note:	**66935** Insulator – Term. Used on Model 60300, 60400 Series type Nos. 942152, 942170, 942215, 942217, 942248.
508	93294	Screw – Blower Housing Mounting Sem
513	296567	Clutch Assembly – Electric Starter
515	260537	Spring – Ratchet Pawl
516	260374	Spring – Connector
521	297973	Shielding – Ignition Cable Used after Serial No. 6209290 on cables integral with ignition coil on type Nos. 942253, 942261.

† Included in Carburetor Overhaul Kit – Part No. 291691

Katolight Service - Master Repair Manual - Page 2488

REF. NO.	PART NO.	DESCRIPTION
527	220754	Clamp – Breather Tube
528	230346	Tube – Breather
529	66578	Grommet – Breather Tube
530	296304	Housing Assy. – Pawl
531	230615	Ratchet – Top Starter
532	260500	Washer – Spring
533	67478	Knob – Stop
534	93323	Screw – Air Cleaner
	Note:	**63949** Stud – Air Cleaner **92067** Nut – Wing Used on Model 60300 Series type Nos. 0173, 0183, 0184, 0194, 0196, 942256, 942265, 942266, 942267, 942273; also used on Model 61300 Series type No. 942656.
535	27987	Element – Air Cleaner
536	296766	Cleaner Assy. – Air
537	27994	Gasket – Air Cleaner
	Note:	**27666** Gasket – Air Cleaner Used on engines with vented breather and No. 296766 Air Cleaner (Ref. No. 536)
544	296769	Armature – Starter
545	296770	Case Assembly – Long Shaft End
546	296775	Case Assembly – Short Shaft End
547	270025	Washer – Fiber
548	221381	Washer – Thrust (Steel)
600	270003	Spacer – Air Cleaner
601	93053	Clip – Breather Tube (2)
602	27666	Gasket – Air Cleaner (Used with vented breather)
603	294873	Cleaner Assembly – Air (with mounting stud) (Used with vented breather)
604	294864	Cover and Filter – Air Cleaner (with mounting stud) (Used with vented breather)

KATOLIGHT PORTABLE GENERATING SETS ALSO AVAILABLE WITH THE FOLLOWING ACCESSORIES

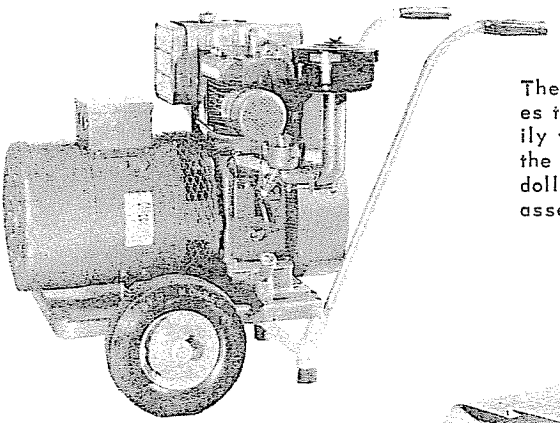

The Katolight portable dolly attaches to the fabricated base plate easily with four bolts. Set screws hold the handles firmly in place. The dolly assembly kit can be quickly assembled or disassembled.

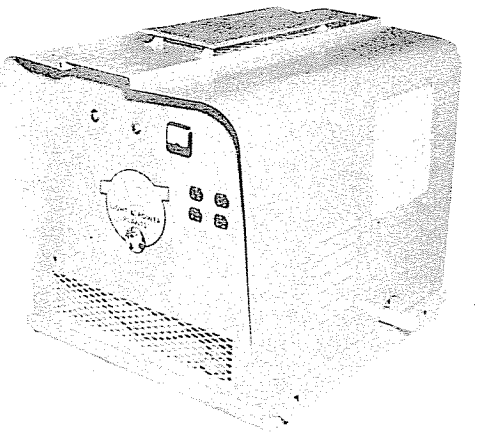

Katolight portable units are also available with protective weatherproof housing complete with battery rack and instrument panel as illustrated for a small additional investment.

This series of lightweight, portable A.C. power plants offers nine models in popular sizes from 750 to 5000 watts. These husky, dependable plants are equally adaptable to provide emergency power when normal power fails, or for portable use to operate electrical tools, equipment and lights when regular power is unobtainable.

A small investment in a Katolight Power Plant of the proper capacity is low cost protection against possible loss of life and property and inconvenience caused by power failure due to stroms, floods or accidents.

Lightweight generating plants which are ideal for many portable applications; for work crews, camps, radio receivers, fire department and emergency units. These models are easily transported in the trunk of a car and can be used on any location where utility electricity is not available. Plants are ready for operation with the addition of gasoline and oil.

THE SOURCE OF DEPENDABLE ELECTRICAL MACHINERY AND ELECTRICAL EQUIPMENT SINCE 1928

Katolight CORPORATION
Box 891 Mankato, Minnesota
PRINTED IN USA
10-64

KATOLIGHT
Solid State Chargers

MODELS:
12SS12
24SS12

Battery chargers are used to charge and maintain starting batteries on diesel, gasoline, and/or natural gas engines. The users and manufacturers of standby engine generator sets agree that reliable starting of the engine generator is completely dependent upon a properly maintained battery.

Katolight® Automatic Solid State Battery Chargers are designed to maintain engine starting batteries in a properly charged condition at all times. The charger adjusts its output automatically using a 2 rate, advanced SCR design. The "float" or trickle rate maintains a battery in fully charged condition. The "high" rate permits a discharged battery to be charged at a significantly faster rate.

The SCR design that Katolight Corporation incorporates into its solid state chargers is a heavy duty silicon rectifier mounted on a large aluminum heat sink.

This design is a highly reliable and efficient system to keep the starting battery fully charged for reliable performance.



FEATURES

- Output voltages of 12 or 24 volts DC.
- Input voltage of 120 volts 1 phase AC frequency - 50/60 Hz.
- Completely fused for protection of all charger components.
- Complete control of high & trickle rate settings.
- Rugged, yet compact printed circuit control board.
- 0-25 amp ammeter to indicate charging current.
- Charge indicator pilot light.
- Disconnect relay. The two disconnect options are shown on the back of this sheet.
- 18 gauge sheet steel cabinet for wall mounting.
- The Silicon Controlled Rectifier (SCR) used as a battery charging regulator eliminates problems inherent in electro mechanical systems such as contact sticking, burning, wide range of pick up, drop out and wear.

SPECIFICATIONS

MODEL	VOLTS		CHARGE RATE	DIMENSIONS			WEIGHT
	INPUT AC	OUTPUT DC		HEIGHT	WIDTH	DEPTH	
12SS12	120	12	0.5 - 6.0	12¼"	6¼"	6"	18 lbs.
24SS12	120	24	0.5 - 12.0	12¼"	6¼"	6"	20 lbs.

Form SSC-485

CONNECTION DRAWING MODELS 12SS12 and 24SS12

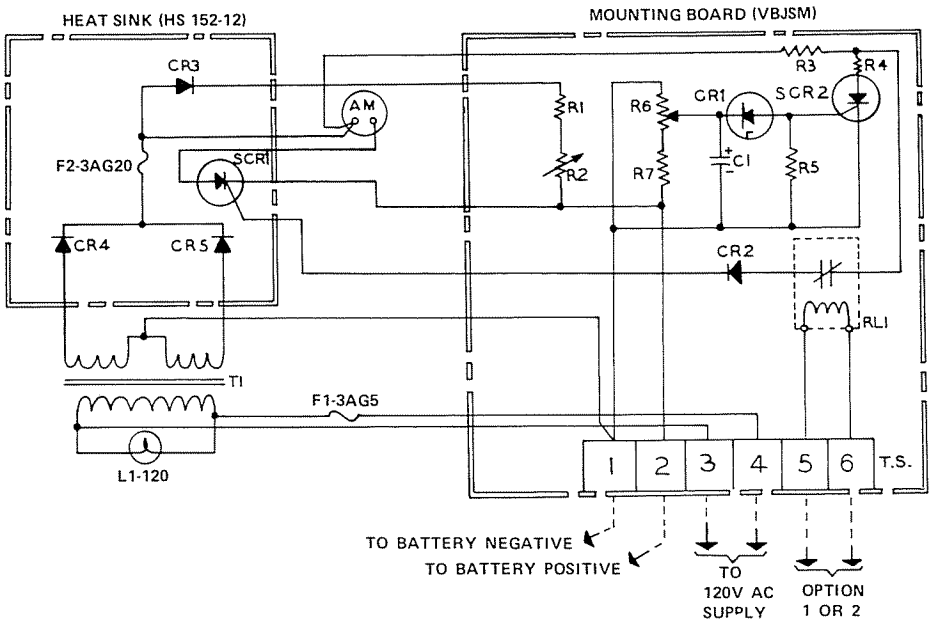

CONNECTION OPTIONS

Option 1 Disconnect charger during cranking

a. Connect terminal No. 5 to terminal No.1 on charger.
b. Connect terminal No. 6 to start solenoid circuit energized during cranking.

Option 2 Disconnect charger when engine is running.

a. Connect terminal No. 5 to terminal No. 1 on charger.
b. Connect terminal No. 6 to energized to run circuit on engine.

KEY

Zener Diode	CR1	Resistor	R5
Diode	CR2	Potentiometer	R6
Diode	CR3	Resistor	R7
Rectifier	CR4 and CR5	Transformer	T-1
Silicon Controlled	SCR1	Terminal Strip	T.S.
Rectifiers	SCR2	Board	821-061
Capacitor	C-1	Heat Sink	H.S. 152-12
Ammeter	AM	Fuse	F1-3AG5
Relay	R1	Fuse	F2-3AG20
Potentiometer	R2	Light	L1-120
Resistor	R3 and R4		

Materials and Specification May Change Without Notice.

KATOLIGHT CORPORATION
3201 Third Avenue
P.O. Box 3229
Mankato, Minnesota 56002-3229
Phone: (507) 625-7973
Telex: 29-0787

For more information contact your nearest Representative, Distributor, or Dealer below:

Printed in U.S.A.

KATOLIGHT®

Automatic Trickle Chargers

MODELS
12TC2A (12 Volt)
24TC2A (24 Volt)

Battery chargers are used to charge and maintain starting batteries on diesel, gasoline, and/or natural gas engines. The users and manufacturers of standby engine generator sets agree that reliable starting of the engine generator is completely dependent upon a properly maintained battery.

These high quality Katolight chargers maintain starting batteries in a fully charged condition for emergency starting purposes, and do it at a reasonable cost. Once the battery is fully charged and has stabilized, both the 12TC2A and 24TC2A models will automatically self adjust to a reduced charge rate maintaining an optimum battery voltage for starting the engine generator. The Automatic Trickle Charger will help to prevent premature battery failure due to overcharging.

The crank/run override will disable the trickle charger from charging the battery during cranking and running of the engine generator set.

Katolight Trickle Chargers may be mounted with other generator instruments. Specify when ordering. (Consult factory for pricing.)

Photo unavailable
at this time.

FEATURES

- Output voltages of 12 or 24 volts DC.
- Automatic reduced charge when battery is fully charged.
- Input fused for protection of all charger components. Circuit breaker protection on output.
- Crank/Run override.
- 0 - 3 amp ammeter to indicate charging current.
- Wall or panel mounting is easily accomplished. When the charger is wall mounted, the swing out front facilitates installation.
- Conduit connections may be made from either the back or bottom of the charger.

SPECIFICATIONS

MODEL	PART NO.	VOLTS		CHARGE RATE	DIMENSIONS			WEIGHT
		INPUT AC	OUTPUT DC		HEIGHT	WIDTH	DEPTH	
12TC2A	41200	120	12	.05 - 2.0	8½"	4"	4½"	4½ lbs.
24TC2A	41201	120	24	.05 - 2.0	8½"	4"	4½"	6½ lbs.

Form: TC/197

CONNECTION DRAWINGS

MODEL 12TC2A (12 Volt)
PART NO. 41200

VOLTAGE CONNECTIONS:
120 Volt AC, Single Phase, 50/60 Cycle
Connect to AC inputs. DC Crank/Run
Signal Connect to CD input.

KEY		PART NO.
Transformer	T - 1	90045
DC Ammeter 0 - 3 Amp	M - 1	40314
Printed Circuit Board	B - 1	41361
Fuse 1 Amp	F - 1	42804
Circuit Breaker, Manual Reset	CB - 1	69589

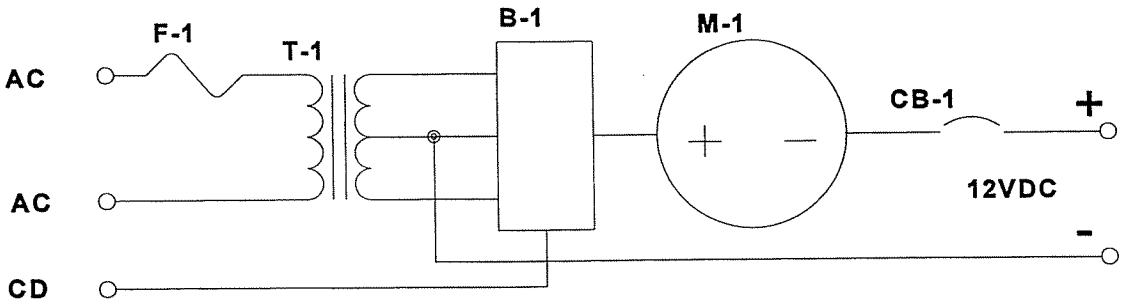

MODEL 24TC2A (24 Volt)
PART NO. 41201

VOLTAGE CONNECTIONS:
120 Volt AC, Single Phase, 50/60 Cycle
Connect to AC inputs. DC Crank/Run
Signal Connect to CD input.

KEY		PART NO.
Transformer	T - 1	90046
DC Ammeter 0 - 3 Amp	M - 1	40314
Printed Circuit Board	B - 1	41362
Fuse 2 Amp	F - 1	42805
Circuit Breaker, Manual Reset	CB - 1	69589

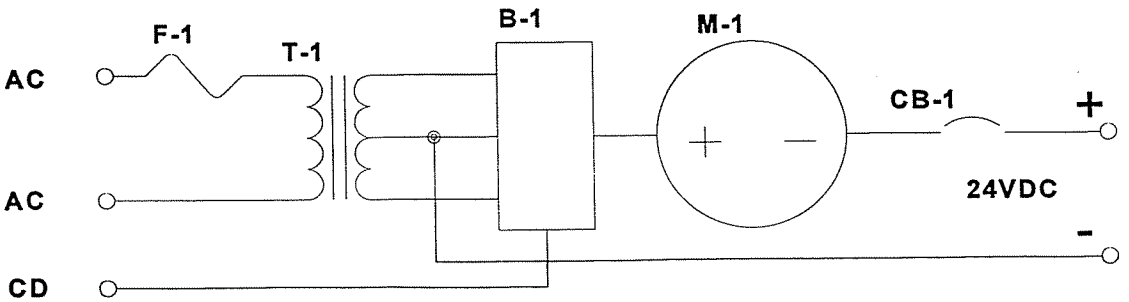

Materials and Specifications may change without notice.

For more information contact your nearest Representative, Distributor, or Dealer below:

KATOLIGHT CORPORATION
3201 Third Avenue
P.O. Box 3229
Mankato, MN 56002-3229
Phone: (507) 625-7973 - FAX: (507) 625-2968

Printed in U.S.A.

GOVERNORS AMERICA CORP.

ENGINE GOVERNING SYSTEMS

ADC100 SERIES

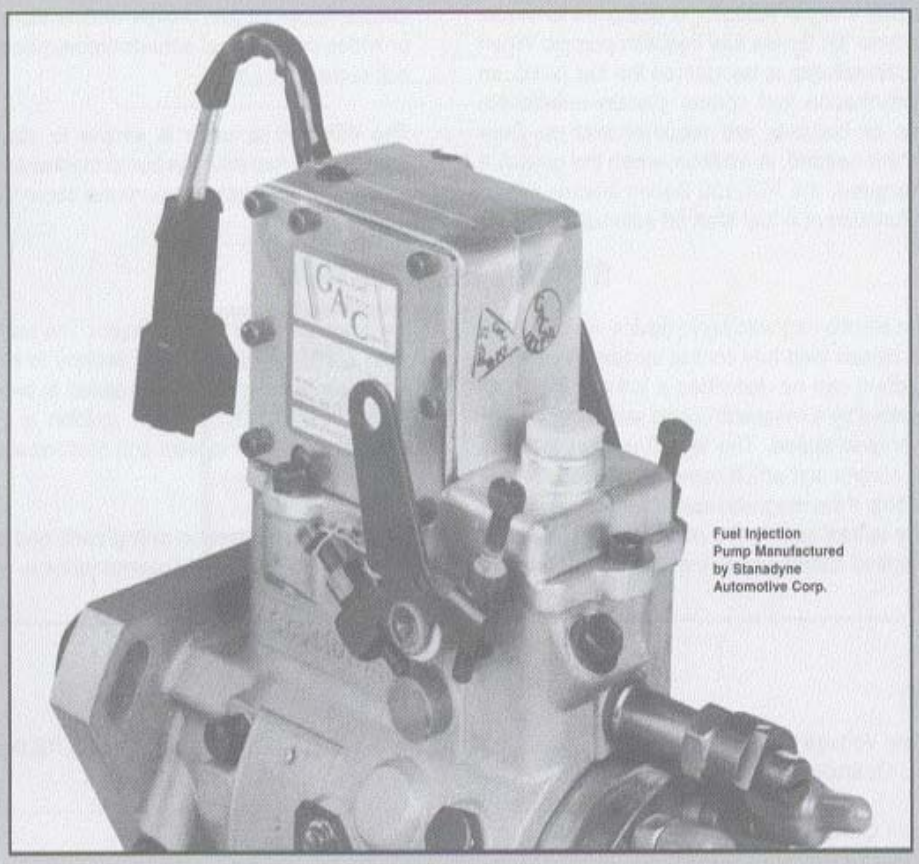

Fuel Injection Pump Manufactured by Stanadyne Automotive Corp.

ELECTRIC ACTUATOR

INCLUDES MODELS: ADC100-12
ADC100-24

MEMBER
EGSA Electrical Generating Systems Association

GOVERNORS AMERICA CORP. • 720 Silver St. • Agawam, MA 01001-2907, USA

GOVERNORS AMERICA CORP.

ENGINE GOVERNING SYSTEMS

PRODUCT INFORMATION BULLETIN

PTI 2040

DECEMBER 1999
FI

ADC100 SERIES

INTEGRAL ACTUATOR for STANADYNE "D" SERIES F.I. PUMPS

INTRODUCTION

The ADC100 Series Integral Actuator is designed to mount directly to Stanadyne "D" Series fuel injection pumps. When the ADC 100 electric actuator is installed on the fuel pump, an integral high performance fuel control system results. No external linkages or brackets are required and no extra Stanadyne parts are needed. In addition, when the governor system is de-energized, the ADC100 Series electric actuator provides the function of a fuel shut off solenoid.

GAC employs its field proven electromechanical design which provides proportional actuator movement based on actuator coil current.

The ADC100 actuator is simple to install. It conveniently replaces the fuel injection pump mechanical governor cover to achieve an integrated proportional servo fuel control package.

SYSTEM DESCRIPTION

The actuator is an electromagnetic servo device which can be integrated into a closed loop fuel control system. An engine speed control system can be described a follows. Electrical signals are generated by a magnetic speed sensor which are proportional to engine speed. The signal is sent into the electronic speed control unit which compares it to the preset engine speed setting. If the magnetic speed sensor signal and the preset engine speed setting are not equal, a change in current from the speed control unit to the actuator will change the magnetic force to the actuator. The rotation of the actuator shaft will then adjust the fuel delivery to the engine which will result in adjusting the engine speed to be equal to the preset engine speed setting. Shaft rotation is proportional to the amount of actuator current and counterbalanced by the actuator's return spring.

Since the design has no sliding parts and is sealed, outstanding reliability results. No maintenance is required.

SPECIFICATIONS

POWER INPUT

Operating Voltage (Dedicated Coil)	12 or 24 VDC available
Nominal Operating Current	1.9 A at 12 VDC
	1.5 A at 24 VDC
Maximum Current (Continuous)	2.7 A at 12 VDC
	1.9 A at 24 VDC

ENVIRONMENTAL

Operating Temperature Range	-40˚to+180˚F(-40˚to+85˚C)
Relative Humidity	up to 100%
All Surface Finishes	Fungus Proof and Corrosion Resistant

PHYSICAL

Dimensions	See Diagram 1
Weight	2.2 lbs (1 Kg.)
Mounting	Directly on STANADYNE "D" Series fuel injection pumps

RELIABILITY

Testing	All Units 100% Tested

MATING HARDWARE

Wiring Harness – (2Wire with Automotive Connector included w/Actuator)	CH1215

Katolight Service - Master Repair Manual - Page 2496

Diagram 1.

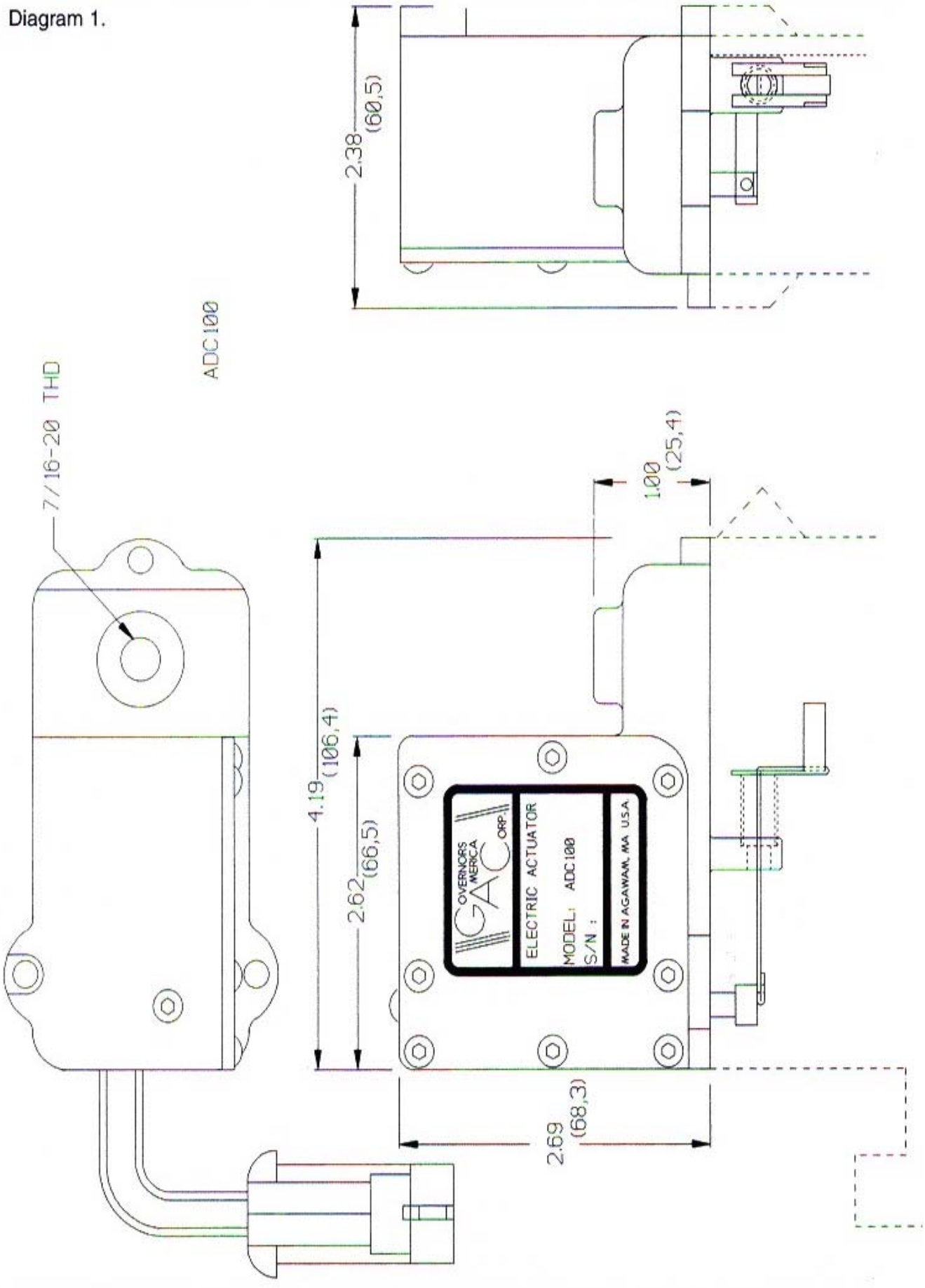
2.38 (60,5)
ADC100
7/16-20 THD
1.00 (25,4)
4.19 (106,4)
2.62 (66,5)
GOVERNORS AMERICA CORP.
GAC
ELECTRIC ACTUATOR
MODEL: ADC100
S/N :
MADE IN AGAWAM, MA U.S.A.
2.69 (68,3)

INSTALLATION

PREPARING THE FUEL PUMP

Before the fuel injection pump's Governor Cover can be removed and replaced by the ADC100 Series electric actuator, it is important for the outside of the pump to be clean. If necessary, remove any dirt with a solvent. This will prevent contaminates from entering the pump. The cleaning solvent as well as fuel oil can be collected by placing a suitable container underneath the pump.

1. Disconnect the pump's Electric Shutoff Solenoid wire from its connection point on the pump's Governor Cover. This wire connection is no longer necessary and it can be eliminated at its source.
2. Remove the Fuel Return Line from the Fuel Return Line Connector.
3. Remove the three (3) Governor Cover Screws. These will be replaced by mounting screws provided with the ADC100 Series actuator.
4. Remove the Governor Cover assembly with care, to insure that no dirt is allowed to enter the fuel injection pump.
5. Remove the Fuel Return Line Connector and the Gasket from the Governor Cover Assembly. Save the Fuel Return Line Connector and Gasket for later assembly use with the ADC100 electric actuator.

INSTALLING THE ACTUATOR

1. Re-install the straight Fuel Return Line Connector and original pump Gasket to the ADC100 electric actuator.
2. Position the ADC100 electric actuator on the fuel injection pump with the tall end of the electric actuator tilted slightly upward. See Diagrams 1 and 2.
3. Slide the ADC 100 electric actuator toward the rear (injector) end of the fuel injection pump until the actuators's U shaped coupler engages the pump's Governor Linkage Hook. After engagement has been made, align the mounting holes between the electric actuator and the fuel injection pump.

CAUTION: Improper engagement of the actuator coupler to the pump's Governor Linkage Hook can cause an engine overspeed condition.

4. Securely fasten the ADC100 electric actuator to the fuel injection pump, using the (3) screws provided with the actuator.
5. Re-attach the Return Fuel Line to the Fuel Return Line Connector seated on the ADC100 electric actuator.

FUEL INJECTION PUMP SET-UP

Prior to starting the engine, the pump's shut off lever, throttle lever and mechanical governor must be set, to insure compatibility with the electronic governor.

1. Secure the shut off lever in the "On Fuel" position, if the Stanadyne pump is equipped with one.
2. Lock the throttle lever in the High Idle fuel setting position. This setting should be 10-12% above the desired governor speed.
3. Adjust the pump's mechanical governor Droop by turning the Droop Adjusting Screw counterclockwise (CCW) until it stops. Then turn it clockwise (CW) two turns. This adjustment will provide compatibility between the mechanical governor and the electronic governor. See Diagram 2.
4. Purge the air in the fuel by removing the allen head plug located on top of the actuator.

WIRING

The ADC100 Series is designed to have a dedicated coil for use in the 12 VDC operation and another dedicated coil for 24 VDC operation. These actuators are respectively identified as ADC100-12 and ADC100-24.

The output from the selected GAC speed control unit is connected to the ADC100 Series actuator using the GAC cable harness CH1215. See the specific speed control unit literature for wiring information.

CH1215 includes the pre-wired actuator mating half connector for the ADC100 Series actuator. The actuator connector offers a vibration resistant and environmentally sealed electrical connection.

TROUBLESHOOTING

If the governor system fails to operate and the actuator is suspected to be the problem, make the following tests.

Measure Coil Resistance

3.0 ohms 12 VDC
7.5 ohms 24 VDC

Measure Coil Isolation

>1M ohm to ground

Before removing cover, make sure you have Permatex Blue RTV Silicone to reseal it.

Remove actuator cover and manually move the actuator through its range by depressing the actuator's armature. Energize the actuator to full fuel (follow steps in control unit publication). No binding or sticking should occur. Install new cover gasket (GA100) and replace actuator cover.

If the actuator passes these tests, the problem is elsewhere in the governor system. Refer to the speed control unit trouble shooting publication.

Diagram 2.

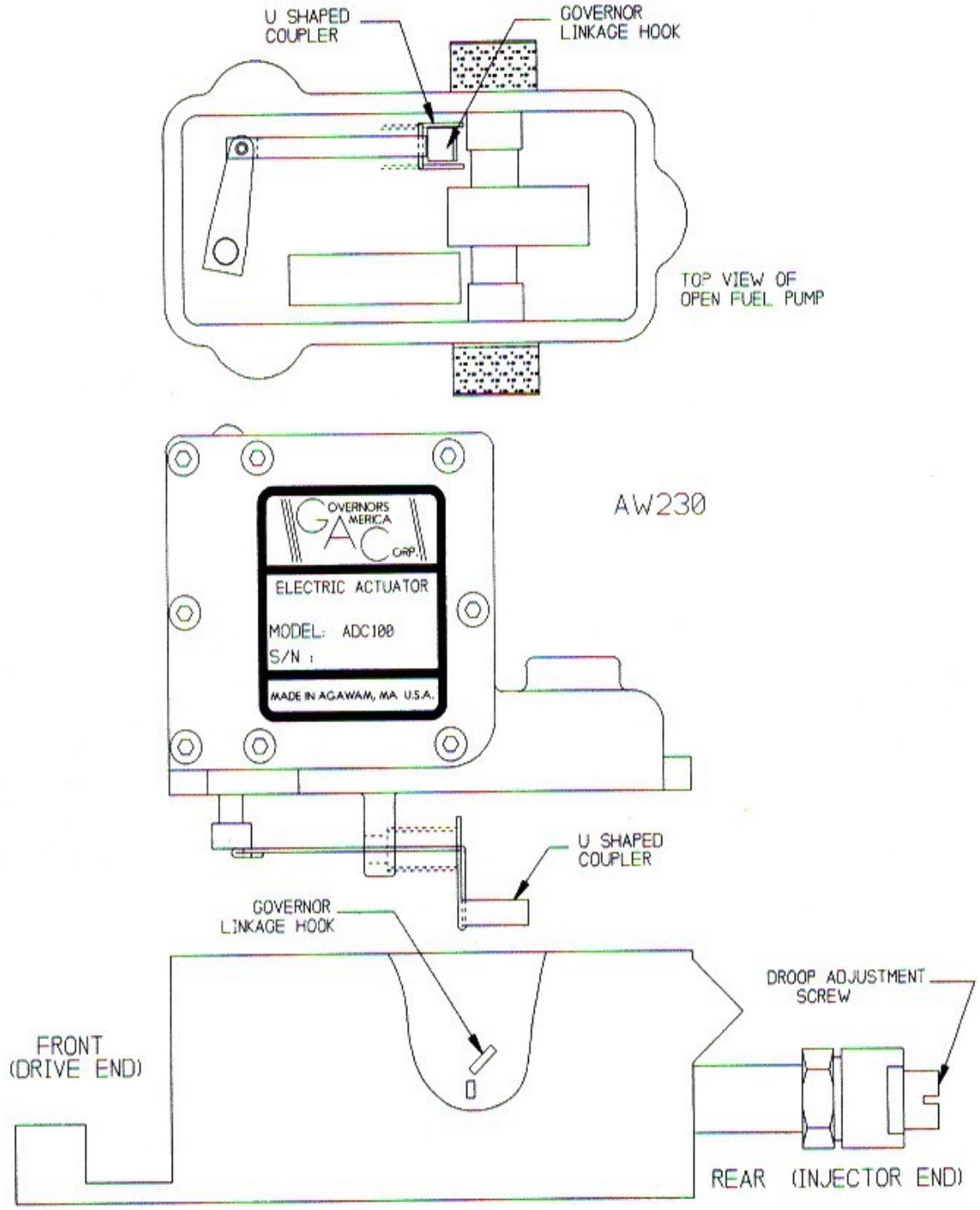
U SHAPED COUPLER
GOVERNOR LINKAGE HOOK
TOP VIEW OF OPEN FUEL PUMP
AW230
GOVERNORS AMERICA CORP
ELECTRIC ACTUATOR
MODEL: ADC100
S/N :
MADE IN AGAWAM, MA U.S.A.
U SHAPED COUPLER
GOVERNOR LINKAGE HOOK
DROOP ADJUSTMENT SCREW
FRONT (DRIVE END)
REAR (INJECTOR END)

GOVERNORS AMERICA CORP.

ENGINE GOVERNING SYSTEMS

120 SERIES



ELECTRIC ACTUATOR

INCLUDES MODELS: ACB 120 ADB 120
ACE 120 ADC 120

MEMBER EGSA Electrical Generating Systems Association

GOVERNORS AMERICA CORP. • 720 Silver St. • Agawam, MA 01001-2907, USA

120 SERIES ELECTRIC ACTUATOR

PRODUCT TECHNICAL INFORMATION

PTI 2010

OCTOBER 2000

MPC

INTRODUCTION

The 120 series electric actuator is a rotary output, linear torque, proportional servo. This electromechanical actuator is typically used as an engine fuel control positioning device. An internal spring provides fail safe operation by forcing the actuator to the fuel shut off position when the actuator is de-energized. This design combines fast operation, multi voltage usage, wider rotation angle, and proven reliability. The actuators can operate directly on 12, 24, or 32 volt battery supplies.

The speed of operation of the actuator is typically faster than competitive actuators, thus it provides more stable and rapid response to transient conditions.

Applications include most block pumps, with or without mechanical governors, distributor type pumps, and small sized carbureted engines. The wide angle of rotation expands the application to a wider variety of engines.

DESCRIPTION

The actuator is an electromagnetic servo device which can be integrated into a closed loop control system. An engine control system can be described as follows. An electrical signal is generated by a magnetic speed sensor which is proportional to engine speed. This signal is sent to the electronic speed control unit which compares it to the preset engine speed setting. If the magnetic speed sensor signal and the preset engine speed setting are not equal, a change in current from the speed control unit to the actuator will change the magnetic force in the actuator.

The rotation of the actuator shaft will then adjust the fuel to the engine to cause the engine speed to be equal to the preset engine speed setting. Shaft rotation is proportional to the amount of actuator current and counterbalanced by the internal spring.

Since the design has no sliding parts and is totally sealed, outstanding reliability is achieved. A single compression spring is used to improve reliability. No maintenance is necessary.

DIAGRAM 1a

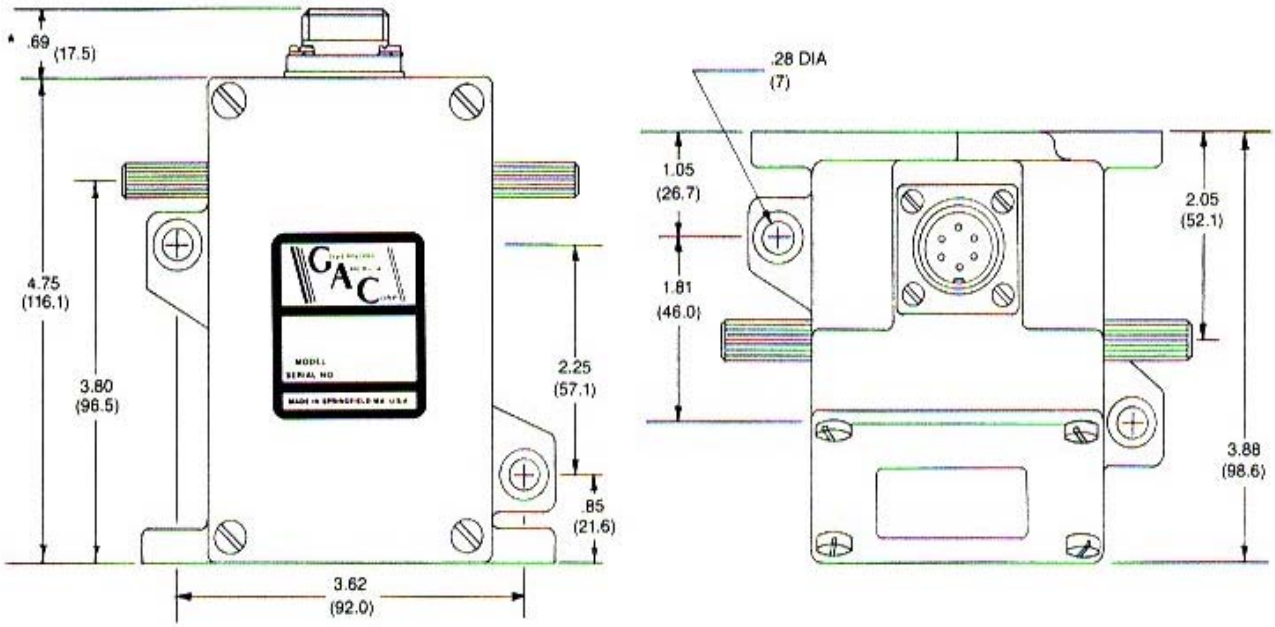

*ACB 120 ONLY

ACB 120
ACTUATOR OUTLINE DIMENSIONS
Dimensions in: INCHES (MM)

DIAGRAM 1b

ADB and ADC ACTUATOR
OUTLINE DIMENSIONS

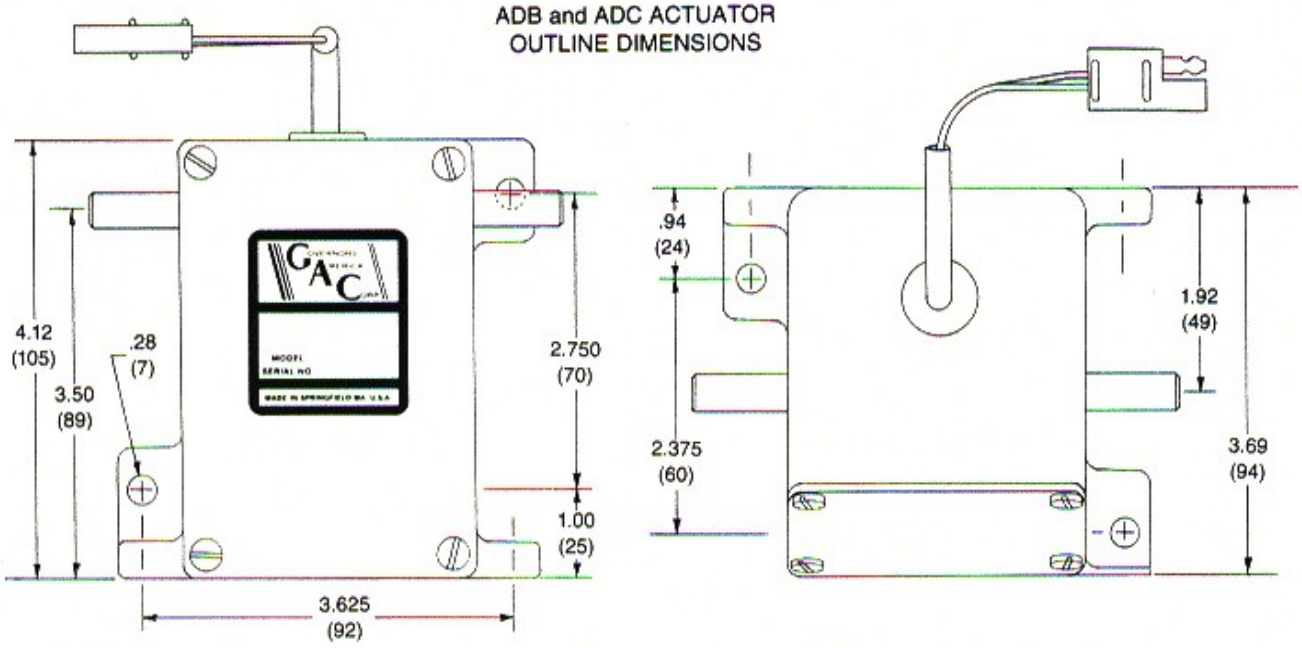

SPECIFICATIONS

PERFORMANCE

Available Torque	See Diagram 2	Max 1.0 lb-ft (1.4 Nm)
Maximum Operating Shaft Angular Travel	ACB/ACE	20 ± 1 degree CW/CCW
	ADB/ADC	25 ± 1 degree CW/CCW

POWER INPUT

Operating voltage (32v for ACB 120/ACE/ADB 120 only)	12, 24, or 32 VDC
Normal Operating Current	2 A at 12 VDC
	1 A at 24/32 VDC
Maximum Current-Continuously Rated	6 A at 12 VDC
	.3 A at 24/32 VDC

ENVIRONMENTAL

Temperature Range	-65° to + 200° F (-54° to + 95° C)
Relative Humidity	up to 100%
All Surface Finishes	Fungus proof and corrosion resistant

PHYSICAL

Dimensions	See Diagram 1
Weight	4.50 lbs. (2.05 kg)
Mounting	Any position, electrical connector at the top-preferred

RELIABILITY

Vibration	up to 20 G @ 50-500 Hz.
Testing	100% Tested

MATING HARDWARE

Connector	ACB/ACE/ADB 120	EC1000/MS3106R 14S-6S (6 pins)
	ADC 120	Supplied with Actuator
Lever	ACB/ACE/ADB 120	LE1400-1
	ADC 120	LE1500-1
Rod End Bearings (to attach a #10-32 THD linkage rod to the lever)		BR 100 (right hand)
		BR 101 (left hand)
Wiring Harness	ADC 120	4 ft. harness supplied with actuator, other lengths available from GAC
	ACE/ACB/ADB 120	Various Lengths available from GAC

120 SERIES ACTUATOR VARIATIONS

ACB/ADB 120. . . . . MS3102R 14S-6P CONNECTOR
ADC 120. . . . . COMMERCIAL CONNECTOR
ADB 120E4. . . . . CUMMINS PT FUEL SYS. ACT.
SEE PIB 2011

ACE 120. . . . . REPLACEMENT FOR DOD #81-705,
NSN #2990-01-176-3510

DIAGRAM 2

Graph of Actuator Torque

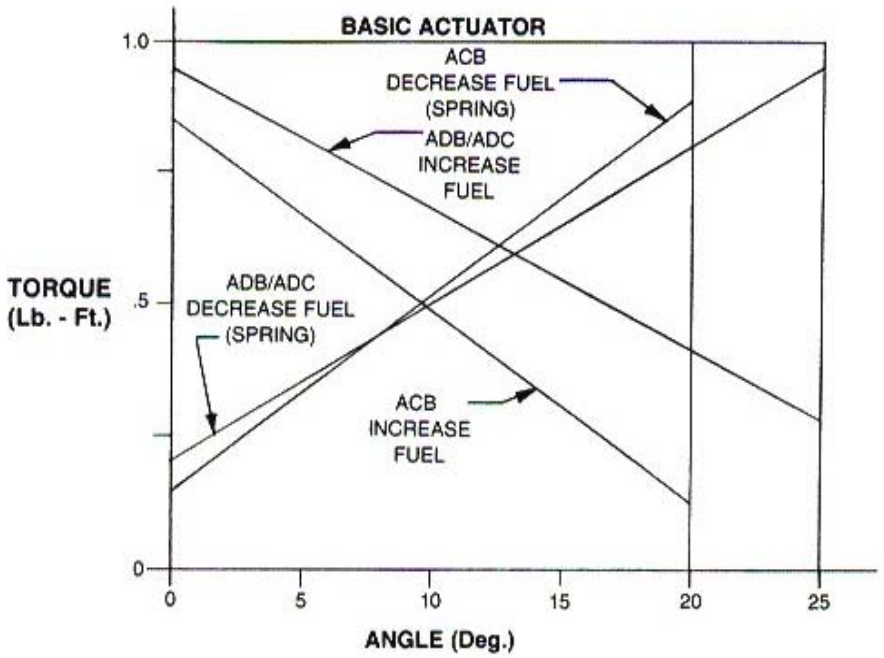

INSTALLATION

The actuator must be rigidly mounted as close as possible to the fuel control lever of the engine. Normal vibration from the engine will not affect the operation of the actuator. The preferred mounting is with the electrical connector at the top.

Linkage arrangement of any actuator system is always important. High quality rod end bearings should be used. Rod end bearings that have high friction can cause instability and ultimately require servicing.

Levers and linkage should be sturdy yet low in mass for the fastest speed of response.

Arrangement of the linkage for actuation of the engine fuel control is an important application consideration. For proportional actuators to operate with linear control systems, it is important to obtain a linear relationship between actuator stroke and fuel delivery. The linkage configuration for diesel fuel systems is typically as illustrated in Diagram 3. The lever on the actuator should be nearly parallel to the pump lever at the mid fuel position for linear fuel control.

For proportional actuators to operate with non-linear systems, it is important to obtain a non-linear relationship between actuator stroke and fuel delivery. Carbureted, PT pumps (CUMMINS), or other non-linear fuel systems require a non-linear linkage configuration as illustrated in Diagram 4. A non-linear fuel system results when more engine power is developed for a given stroke at positions of low fuel settings than at high fuel settings. In this case the levers should be parallel at full load.

In general, the linkage should be adjusted so that the fuel control lever minimum and maximum fuel stops are used rather than the actuator internal mechanical stops. The actuator should be adjusted so that it operates over at least one half (10 degrees) of its available travel.

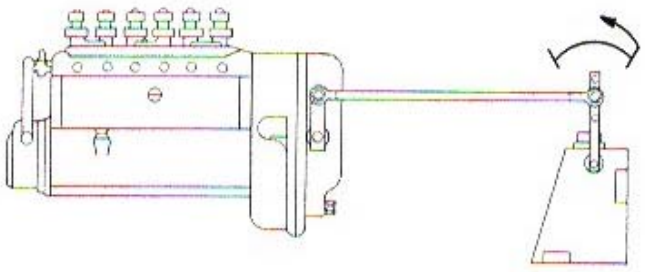

Fuel Control Lever At Mid Fuel Position
DIAGRAM 3

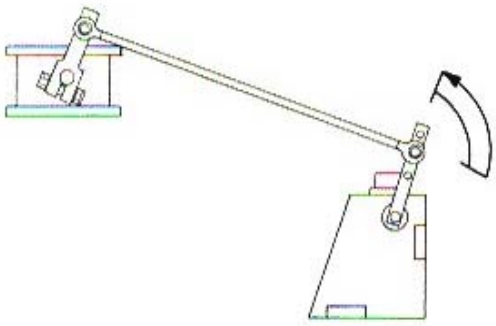

Carburetor Fuel Valve At Full Fuel Position
DIAGRAM 4

Katolight Service - Master Repair Manual - Page 2504

Wiring

The ADC 120 is prewired for 12 or 24V. Use the included harness to connect the actuator to the speed control. DO NOT use an ADC 120 on a 32V system. If an ACB/ADB 120 is used, the electrical connector must be wired in a configuration dependent on the system voltage supply.

The maximum wire size that will fit into the actuator mating half connector is #16 AWG (1.3 mm sq.). Cable CH 1203, a pre-wired actuator cable harness, is available. It is 12 ft. (4 meters) in length and suitable for use on 12 or 24 volt systems.

For 12 volt applications, note that it is preferable to connect four cables, one to each of the coil wires and wire per Diagram 5. Maximum current is 6 Amps. The recommended wire size is #16 AWG (1.3 mm sq.).

DIAGRAM 5
12 Volt Operation

A to C
B to D
A & D to actuator output terminals of speed control unit

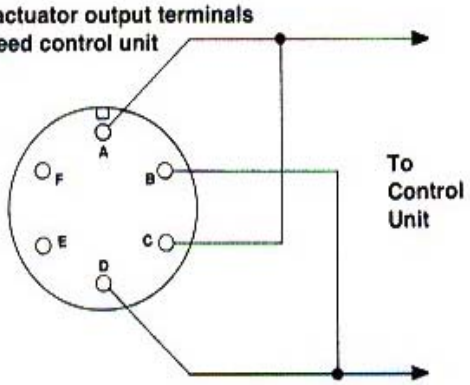

For 24 volt applications, a simple jumper wire between pins B and C at the mating half connector can be made. The remaining two pins, A and D, are connected to the speed control. Maximum current is 3 Amps. The recommended wire size is at least #18 AWG (0.8 mm sq.). See Diagram 6.

For 32 volt applications, connect the actuator electrical connector as illustrated for 24 Volt operation. A resistor that will drop the remaining voltage above 32 Volts is needed. A 2.0 ohm, 25 watt resistor should be placed in series with pin A of the actuator and the output of the speed control unit. Maximum current is 3 Amps.

Actuator cable harnesses with lengths greater than 10 ft. (3 meters) from the actuator to the speed control unit may introduce current losses which can restrict full rotation of the actuator. In this case, use of a larger gauge wire is required.

For applications where EMI is of concern, shielded cable for the actuator is recommended. Twisting the cable will substantially reduce EMI.

Connector pins E and F have no function in this actuator.

DIAGRAM 6
24 Volt Operation

B to C
A & D to actuator output terminals of speed control unit

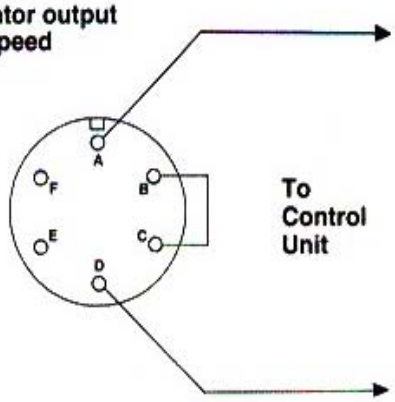

ADJUSTMENTS

WARNING
An overspeed shutdown device, independent of the governor system, should be provided to prevent loss of engine control which may cause personal injury or equipment damage.

Reconfirm that the linkage is not binding and that friction is minimal. Before starting the engine, manually push the actuator to the full fuel position and release. It should return instantly to the no fuel position without any binding. Once the engine has been started, the linkage can be optimized by temporarily inserting an ammeter in one of the wires between the speed control unit and the actuator or by measuring the voltage across the actuator. Measure the actuator current or voltage at no load and full load. The range and the starting current or voltage are important for optimizing the linkage system. Typical values are shown in the table below for 12 volt and 24 volt systems.

To increase the range of the actuator voltage or current, move the linkage to a lower hole on the actuator lever. A lower range of actuator current or voltage than suggested can cause instability or poor performance.

To increase or decrease the no load current or voltage, adjust the length of the link between the actuator and the engine fuel control.

Small angles of actuator travel may improve transient performance, but will reduce available force at the fuel control lever. Allowing the actuator to operate through at least one half (10 degrees) of its stroke will usually provide near optimum response.

Actuator Current/Voltage Range Chart

	12 Volts	24 Volts
No Load	1 Amps, 2 Volts	.5 Amps, 4 Volts
Full Load	2.5 Amps, 5 Volts	1.2 Amps, 10 Volts

Katolight Service - Master Repair Manual - Page 2505

TROUBLESHOOTING

If the governor system fails to operate, make the following tests at the actuator mounted connector while moving the actuator through its stroke.

Measure the Resistance from:

ACB/ACE/ADB 120	
A to B	4.2 ohms
C to D	3.4 ohms
A to C	Infinity
A to Housing	Infinity
C to Housing	Infinity
ADC 120	
Red to White (12 v)	1.9 ohms
Red to White (24 v)	7.5 ohms
Red to Housing	Infinity
White to Housing	Infinity

Energize the actuator to full fuel (follow steps in control unit publication) and manually move the actuator through its range. No binding or sticking should occur.

If the actuator passes these tests, the problem is elsewhere in the system. Refer to the control unit troubleshooting publication.

GOVERNORS AMERICA CORP.

720 Silver St. • Agawam, MA 01001-2907, USA • (413) 786-5600

FAX (413) 786-5666

e-mail: info@governors-america.com

Internet: www.governors-america.com

GOVERNORS AMERICA CORP.

ENGINE GOVERNING SYSTEMS

225 SERIES

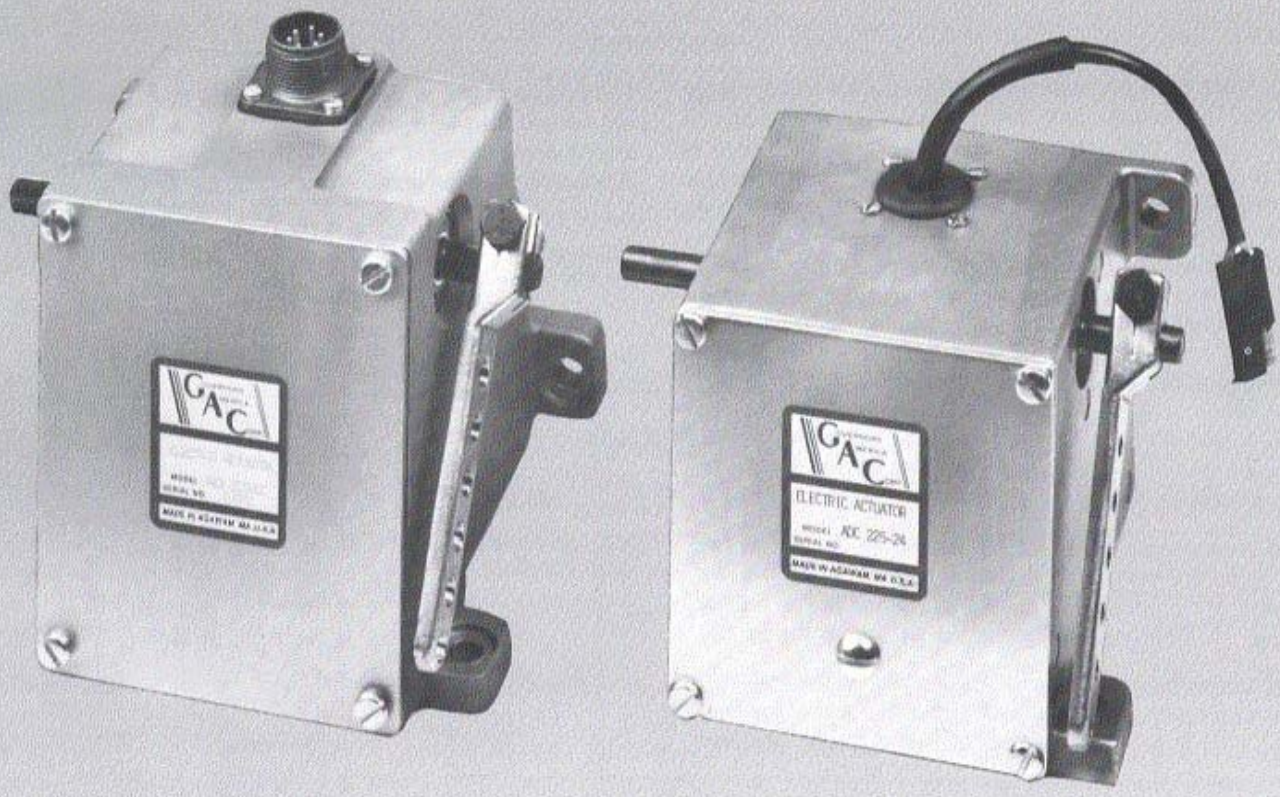

ELECTRIC ACTUATOR

INCLUDES MODELS: ACB 225 ADB 225 ADC 225 ADB 225F

MEMBER EGSA Electrical Generating Systems Association

GOVERNORS AMERICA CORP. • 720 Silver St. • Agawam, MA 01001-2907, USA

225 SERIES ELECTRIC ACTUATOR

PRODUCT TECHNICAL INFORMATION

PTI 2000

SEPTEMBER 1997

MPC

INTRODUCTION

The 225 Series electric actuator is a rotary output, linear torque, proportional servo. This electromechanical actuator is typically used as an engine fuel control positioning device. An internal spring provides fail safe operation by forcing the actuator to the fuel shut off position when the actuator is de-energized. This design combines fast operation, multi voltage usage, wider rotation angles, and proven reliability. The actuator can operate directly from 12, 24, or 32 volt battery supplies.

The speed of operation of the actuator is typically faster than competitive units, thus it provides more stable and rapid response to transient conditions.

Applications include most block pumps, with or without mechanical governors, distributor type pumps, and medium sized carbureted engines. The 25 degrees of rotation expands the application to a wider variety of engines.

DESCRIPTION

The actuator is an electromagnetic servo device which can be integrated into a closed loop control system. An engine control system can be described as follows. An electrical signal is generated by a magnetic speed sensor which is proportional to engine speed. This signal is sent into the electronic speed control unit which compares it to the preset engine speed setting. If the magnetic speed sensor signal and the preset engine speed setting are not equal, a change in current from the speed control unit to the actuator will change the magnetic force in the actuator.

The rotation of the actuator shaft will then adjust the fuel to the engine and cause the engine speed to be equal to the preset engine speed setting. Shaft rotation is proportional to the amount of actuator current and counterbalanced by the internal spring.

Since the design has no sliding parts and is totally sealed, outstanding reliability results. A single compression spring is used to improve reliability. No maintenance is necessary.

DIAGRAM 1a

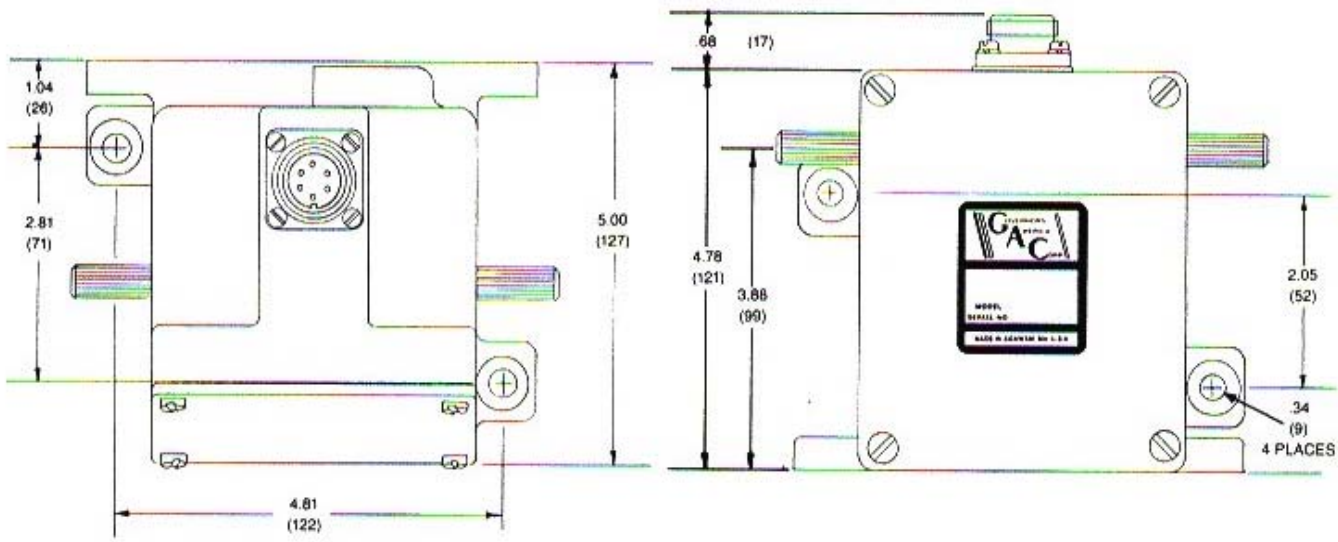

ACB
Actuator Outline Dimensions
Dimensions in: Inches (mm)

DIAGRAM 1b

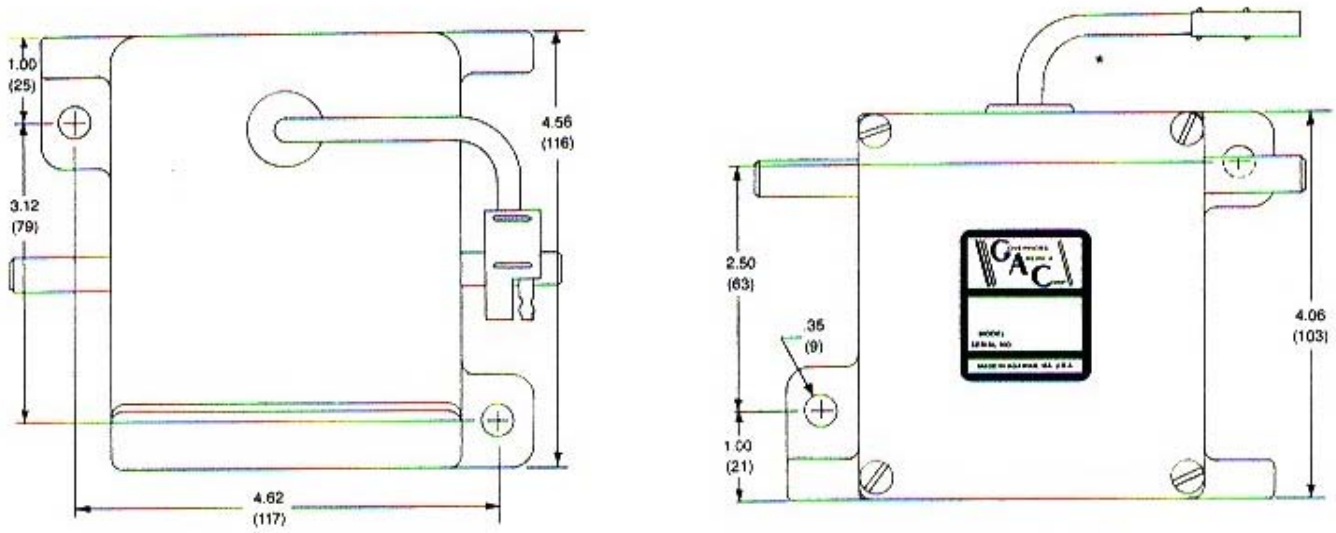

* ADC only

ADB and ADC Actuator Outline Dimensions

SPECIFICATIONS

PERFORMANCE

Available Torque	See Diagram 2. . . . . Max 2.2 lb-ft (2.7 Nm)
Maximum Operating Shaft Angular Travel	25 ± 1 degree CW/CCW

POWER INPUT

Operating voltage	12, 24, or 32 VDC
Normal Operating Current	3 A at 12 VDC
	1.5 A at 24/32 VDC
Maximum Current-Continuously Rated	8 A at 12 VDC, 9 A for HOS
	4 A at 24/32 VDC

ENVIRONMENTAL

Temperature Range	-65° to +200° F (-54° to +95° C)
Relative Humidity	up to 100%
All Surface Finishes	Fungus proof and corrosion resistant

PHYSICAL

Dimensions	See Diagram 1
Weight	8.25 lbs. (3.75 kg)
Mounting	Any position, electrical connector at the top preferred

RELIABILITY

Vibration	up to 20 G @ 50-500 Hz.
Testing	100% Tested

MATING HARDWARE

Connector ACB 225/ADB 225	EC1000/MS3106R 14S-6S (6 pins)
ADC 225	Supplied with Actuator
Lever ACB 225/ADB 225/ADC225S	LE1400-2
ADC 225	LE1500-2
Rod End Bearings (to attach a 1/4-28THD linkage rod to the lever)	BR 200 (right hand)
	BR 201 (left hand)
Wiring Harness ADC 225	Supplied with Actuator
ACB 225/ADB 225	Various Lengths available from GAC

225 SERIES ACTUATOR VARIATIONS

ACB 225/ADB 225 . . . . . MS3102R 14S-6P CONNECTOR ADC 225 . . . COMMERCIAL CONNECTOR 12 or 24 VOLTS

DIAGRAM 2

Graph of Actuator Torque

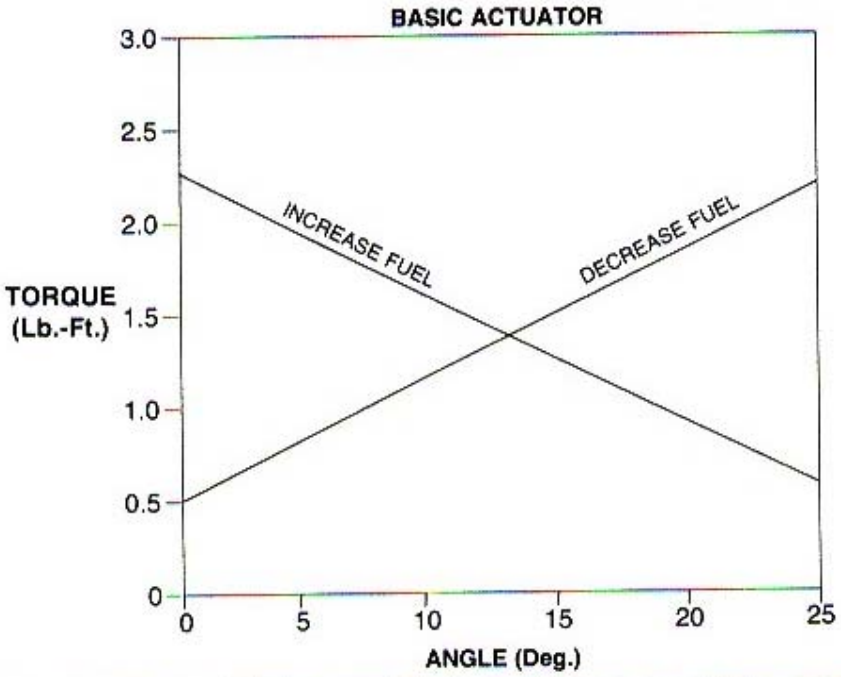

INSTALLATION

The actuator must be rigidly mounted as close as possible to the fuel control lever of the engine. Vibration from the engine will not affect the operation of the actuator. The preferred mounting is with the electrical connector at the top. Applications with the actuator upside down, on its back, or sideways should be avoided.

Linkage arrangement of any actuator system is always important. High quality rod end bearings should be used. Rod end bearings that have high friction can cause instability and require servicing.

Levers and linkage should be sturdy yet low in mass for the fastest speed of response conditions.

Arrangement of the linkage for actuation of the engine fuel control is an important application consideration. For proportional actuators to operate with linear control systems, it is important to obtain a linear relationship between actuator stroke and fuel delivery. The linkage configuration for diesel fuel systems is typically as illustrated in Diagram 3. The lever on the actuator should be nearly parallel to the pump lever at the mid fuel position for linear fuel control.

For proportional actuators to operate with non-linear systems, it is important to obtain a non-linear relationship between actuator stroke and fuel delivery. Carbureted, PT Pumps (CUMMINS), or other non-linear fuel systems require a non-linear fuel linkage configuration as illustrated in Diagram 4. A non-linear fuel system results when more engine power is developed for a given stroke at positions of low fuel settings than at high fuel settings. In this case the levers should be parallel at full load.

In general, the linkage should be adjusted so that the fuel control lever minimum and maximum fuel stops are used rather than the actuator internal mechanical stops. The actuator should be adjusted so that it operates over at least one half (12 degrees) of its available travel.

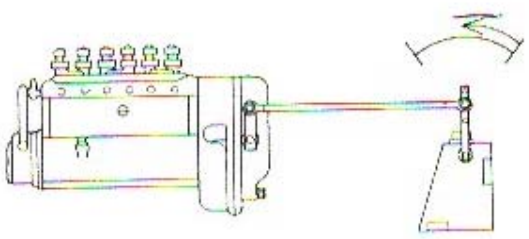

Fuel Control Lever At Mid Fuel Position
DIAGRAM 3

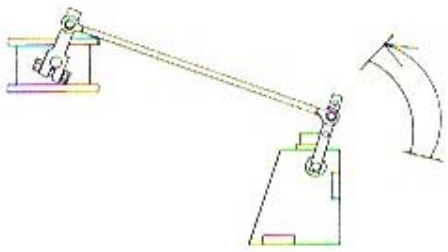

Carburetor Fuel Valve At Full Fuel Position
DIAGRAM 4

Wiring

The ADC is prewired for 12 or 24V. Use the included harness to connect the actuator to the speed control. Do not use an ADC on a 32V system.

If an ACB or ADB is used, the mating electrical connector must be wired in a configuration dependent on the system voltage supply. The maximum wire size that will fit into the actuator mating half connector is #16 AWG (1.3 mm sq.). Cable CH 1203, a pre-wired actuator cable harness, is available. It is 12 feet (4 Meters) in length and suitable for use on 12 or 24 volt systems.

For 12 volt applications, note that it is preferable to connect four cables, one to each of the coil wires and wire per Diagram 5. Maximum current is 8 Amps. The recommended wire size is at least #16 AWG (1.3 mm sq.).

DIAGRAM 5
12 Volt Operation

A to C
B to D
A & D to output terminals of speed control unit

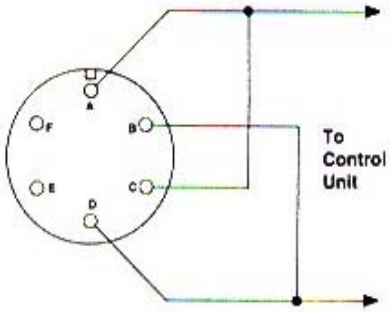

For 24 volt applications, a simple jumper wire between pins B and C at the mating half connector can be made. The remaining two pins, A and D, can be extended to the required length. Maximum current is 4 Amps. The recommended wire size is at least #18 AWG (1.0 mm sq.). See Diagram 6.

DIAGRAM 6
24 Volt Operation

B to C
A & D to output terminals of speed control unit

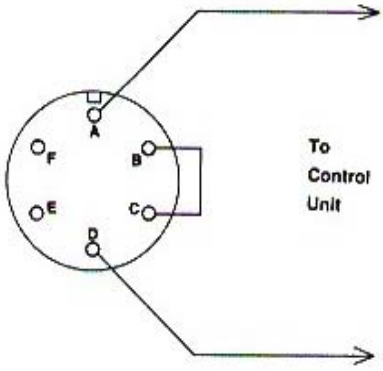

For 32 volt applications, connect the actuator electrical connector as illustrated for 24 Volt operation. A resistor that will drop the remaining voltage above 32 Volts is needed. A 1.5 ohm, 25 watt resistor should be placed in series with pin A of the actuator and the output of the speed control unit. Maximum current is 4 Amps.

Actuator cable harnesses with lengths greater than 10 ft. (3 meters) from the actuator to the speed control unit may introduce current losses which can restrict full rotation of the actuator. In this case, use of a larger gauge wire is required.

For applications where EMI is of concern, shielded cable for the actuator is recommended. Twisting of the cable alone will substantially reduce EMI.

ADB225F Wiring

The ADB225F version of the actuator includes a position sensor. A GAC speed control unit that includes fuel management electronics is required to interface with this sensor.

See the appropriate speed control unit literature for complete wiring information.

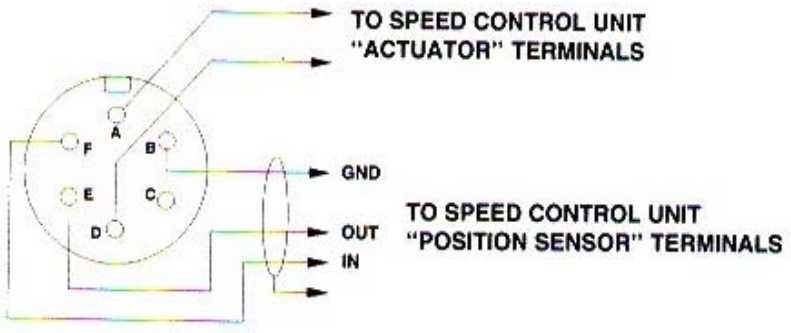

Katolight Service - Master Repair Manual - Page 2511

ADJUSTMENTS

WARNING

An overspeed shutdown device, independent of the governor system, should be provided to prevent loss of engine control which may cause personal injury or equipment damage.

Reconfirm that the linkage is not binding and that friction is minimal. Before starting the engine, push the actuator to the full fuel position and release. It should return instantly to the no fuel position without any binding. Once the engine has been started, the linkage can be optimized by temporarily inserting an ammeter in one of the wires between the speed control unit and the actuator or by measuring the voltage across the actuator. Measure the actuator current or voltage at no load and full load. The range and the starting current or voltage are important for optimizing the linkage system. Typical values are shown in the table below for 12 volt and 24 volt systems.

To increase the range of the actuator voltage or current, move the linkage to a lower hole on the actuator lever. A lower range of actuator current than suggested can cause instability or poor performance.

To increase or decrease the no load current or voltage, adjust the length of the link between the actuator and the engine fuel control.

Smaller angles of actuator travel may improve transient performance, but will reduce available force at the fuel control lever. Allowing the actuator to operate through at least one half (12 degrees) of its stroke will usually provide near optimum response.

Actuator Current/Voltage Range Chart

	12 Volts	24 Volts
No Load	2.5 Amps, 4 Volts	1.5 Amps, 12 Volts
Full Load	4 Amps, 6 Volts	2.5 Amps, 18 Volts

TROUBLESHOOTING

If the governor system fails to operate, make the following tests at the actuator mounted connector while moving the actuator through its stroke.

Measure the Resistance

ACB 225/ADB 225	
A to B	2.5 ohms
C to D	2.5 ohms
A to C	Infinity
A to Housing	Infinity
C to Housing	Infinity

ADC 225	
Red to white (12V)	1.25 ohms
Red to white (24V)	5.0 ohms
Red to housing	Infinity
White to housing	Infinity

Energize the actuator to full fuel (follow steps in control unit publication) and manually move the actuator through its range. No binding or sticking should occur.

If the actuator passes these tests, the problem is elsewhere in the system. Refer to the control unit troubleshooting publication.

GOVERNORS AMERICA CORP.

720 Silver St. • Agawam, MA 01001-2907, USA • (413) 786-5600

FAX (413) 786-5666

e-mail: info@governors-america.com

Internet: www.governors-america.com

GOVERNORS AMERICA CORP.

ENGINE GOVERNING SYSTEMS

ACB275 SERIES

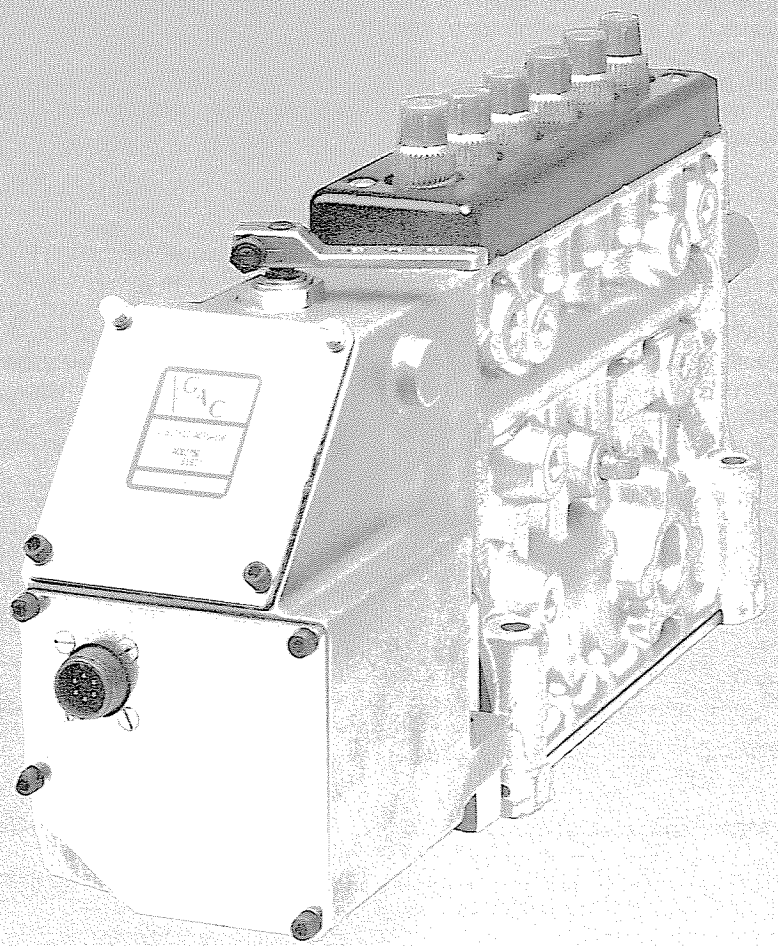

ELECTRIC ACTUATOR

INCLUDES MODELS: ACB275H
ACB275F

EGSA Electrical Generating Systems Association

GOVERNORS AMERICA CORP. • 720 Silver St. • Agawam, MA 01001-2907, USA

ACB275 SERIES ELECTRIC ACTUATOR

PRODUCT TECHNICAL INFORMATION

PTI 2030

SEPTEMBER 1997

MPC

INTRODUCTION

The ACB275 Series Electric Acutator is designed to mount directly on a Bosch "P" size fuel injection pump in place of the mechanical governor. When the ACB275 is installed on the fuel pump, an integral high performance fuel control system without external linkages or brackets results. An external fuel shut off is provided to manually override the actuator's control. Also provided is an adjustable internal maximum fuel limit.

The ACB275 Series is a second generation design that is more powerful than its predecessor and is able to control up to 12 cylinder pumps. The actuator was designed with two isolated chambers. The upper chamber is wet with oil and contains the actuator linkage. The lower chamber contains the electro-magnetic components. This design eliminates the possibility of any magnetic particles collecting and jamming the actuator. Unreliable devices such as bellows and sliding seals are not used so that no maintenance is required. The actuator typically outlasts the engine's life.

Presently, there are two actuators in the ACB275 Series. The ACB275H has the shut off shaft located on the top of the actuator. The ACB275F has the top mounted shut off shaft and includes a rack position sensor. This model must be used with a GAC control unit that reads the sensor.

The ACB275 can be installed on Bosch "A", MW, and "RP 21" size pumps by using special adaptor kits.

SYSTEM DESCRIPTION

The actuator is an electromagnetic servo device which can be integrated into a closed loop control system. An engine control system can be described as follows. An electrical signal is generated by a magnetic speed sensor which is proportional to engine speed. This signal is sent into the electronic speed control unit which compares it to the preset engine speed setting. If the magnetic speed sensor signal and the preset engine speed setting are not equal, a change in current from the speed control unit to the actuator will change the magnetic force in the actuator. The rotation of the actuator shaft will then adjust the fuel to the engine and cause the engine speed to be equal to the preset engine speed setting. Shaft rotation is proportional to the amount of actuator current and counterbalanced by the internal spring.

Since the design has no sliding parts and is totally sealed, outstanding reliability results. A single compression spring is used to improve reliability. No maintenance is necessary.

SPECIFICATIONS

PERFORMANCE
- Force ..... (See Diagram 2) ..... 13.2 lb. max (58.7 N)
- Operating Stroke ..... 0.88 in max (22.5mm) internally adjustable

POWER INPUT
- Operating voltage ..... 12 or 24 VDC
- Normal operating current ..... 3A at 12 VDC, 1.5 A at 24 VDC
- Maximum current (Continuous) ..... 9A at 12 VDC, 4.5A at 24 VDC

ENVIRONMENT
- Operating temperature range ..... -40° to +185° F (-40° to +85° C)
- Relative Humidity ..... up to 100%
- All surface finishes ..... Fungus proof and corrosion resistant

PHYSICAL
- Dimensions ..... See Diagram 1
- Weight ..... 11 lb. (4.9 kg)
- Mounting ..... Directly on RB 3000 and 7000 fuel injection pumps in place of the mechanical governor. Requires camshaft bearing retainer kit.

RELIABILITY
- Testing 100%

MATING HARDWARE
- Connector ..... EC1000 or EC1010
- Shut off lever LE1400-4
- Wiring Harness ..... CH1203, 12 ft (4 m)

CAMSHAFT BEARING RETAINER KITS
- 3000 Series pump KT275
- 7000 Series pump KT276

VARIATIONS
- ACB275H ..... Top mounted shut off
- ACB275F ..... Rack position sensor, top mounted shut off

Katolight Service - Master Repair Manual - Page 2514

DIAGRAM 2 ACB275 Fuel Rack Force vs. Stroke

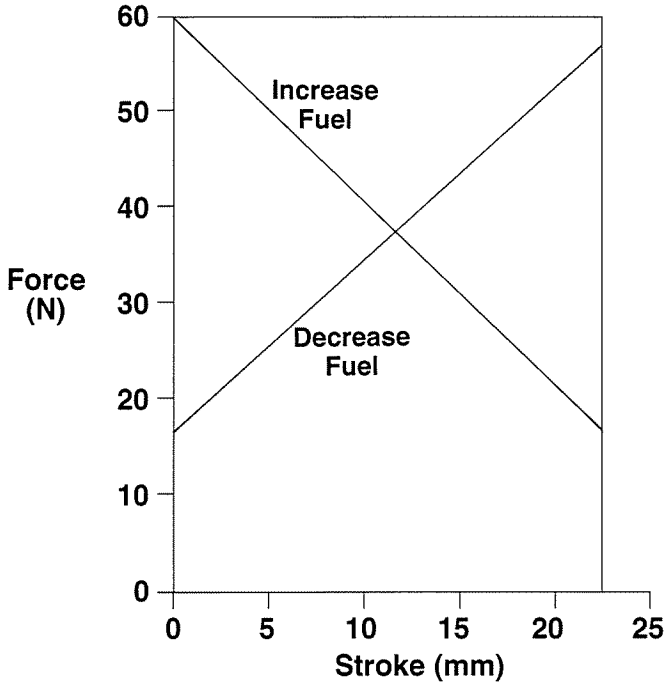

INSTALLATION

Preparing the Fuel Pump

If the pump is equipped with a mechanical governor, it must be removed. GAC recommends that the modification be done by a qualified fuel injection shop. The following procedure is intended to be a guide for a technician. Several types of mechanical governors are made for the "P" size pump. These steps are a generalized procedure.

NOTE: Be prepared to collect the oil that is in the mechanical governor.

1. Remove the rear housing of the mechanical governor and disconnect the governor assembly from the fuel rack.

2. Remove the flyweight assembly with a tool like the one shown in Diagram 1.

Diagram 1

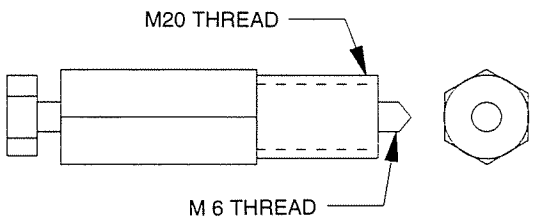

3. Remove the intermediate governor housing. This leaves only the the rack and camshaft protruding from the housing.

4. Install the appropriate camshaft bearing retainer kit following PIB 2031. This kit includes the correct shims to insure that the retainer plate rests on the bearing and also prevents oil from leaking out around the camshaft.

Camshaft Bearing Retainer Kits

3000 pump KT275
7000 pump KT276

5. The oil drain hex plug located on the pump between the fuel rack and camshaft may be removed to allow any oil which leaks from the fuel rack to drain back into the pump.

Installing the Actuator

1. Remove the four screws that fasten the top cover (with label) to the actuator and expose the linkage used to connect the actuator to the fuel rack.

2. Remove the screw that attaches the ball bearing rod end to the lever. Do not remove or loosen the lever from the actuator shaft.

3. The opposite end of the linkage must be attached to the top of the fuel rack with the screw and lock nut provided. Tighten the screw and nut securely to 4.0 - 4.5 Nm. The linkage is preset to a specific length and locked. Any adjustment of rack travel must be made using the slot on the actuator lever.

4. The gasket supplied in the installation parts kit fits between the actuator and pump. Clean the mounting surfaces of the actuator and the pump. One side of the gasket is coated with adhesive. Peel off the backing and attach the gasket to the actuator. A small amount of gasket sealant, such as RTV silicone, is recommended for the pump side of the gasket.

5. Loosen the two M8 hex nuts that hold the lower mounting bar to the actuator.

INSTALLING THE ELECTRIC ACTUATOR

6. Place the actuator over the rack and linkage. Fit the lower part of the actuator onto the bearing retainer plate. Attach the actuator to the pump with four M5 22mm screws and washers through the upper mounting holes. Tighten these screws securely to 9 Nm so that the gasket is compressed evenly.

7. Push the lower mounting bar against the bearing retainer plate and tighten the two M6 nuts onto the studs that are in the pump to 10 Nm.

8. Tighten the two M8 nuts on the studs that hold the mounting bar onto the actuator to 20 Nm.

9. The linkage attached to the fuel rack must be free when moved from shut off to full fuel. Pull the linkage fully away from the pump. Push the linkage 1mm toward the pump and attach it to the slot in the actuator lever with the M5 screw, two flat washers, and locking nut. Tighten securely to 4 Nm. The fuel rack should be 1mm or less away from its internal physical stop. The zero fuel stop of the system will now be provided by the actuator instead of inside the fuel pump.

10. Manually move the actuator lever and linkage through its full range of motion. No binding should be noticed. The stop plate on the linkage must not contact the inside of the housing.

11. A maximum fuel stop adjustment is located on the actuator lever. The set screw and lock nut may be adjusted to limit the travel of the fuel rack.

12. Push the linkage to the full fuel position and operate the manual shut off to insure that the shut off lever correctly contacts the stop plate and forces the linkage to zero fuel.

13. After the maximum fuel delivery has been adjusted on an engine or dynamometer, the top cover may be installed. Place the special sealing screw in the lower left hand corner. Lockwire the two covers together to prevent tampering.

WIRING

The EC1000 or EC1010 electrical connector that mates with the actuator must be prewired in a configuration to match the system voltage.

Fabricate a cable harness to connect the speed control unit to the actuator. The recommended wire size of the cable harness is at least #16 gauge (1.5 mm²) for 12 volt systems and #18 gauge (1.0 mm²) for 24 V systems. Larger gauge wire will be necessary for cable lengths greater than 12 ft. (4 m). Cable harness CH1203 is available from GAC.

For 32 V operation, wire the connector as shown for 24 V operation and add a 1.5 ohm, 25 V resistor in series with pin A of the actuator connector and the corresponding output terminal of the speed control unit.

Connect pin A and D to the speed control unit. Refer to applicable speed control unit publication for specific wiring information.

The ACB275F version of the actuator includes a rack position sensor. A GAC speed control unit that includes fuel management electronics is required to interface with this sensor. See the appropriate speed control unit literature for wiring information.

CAUTION

The engine should be equipped with an independent shutdown device to prevent overspeed which can cause equipment damage or personal injury.

ACB275D WIRING

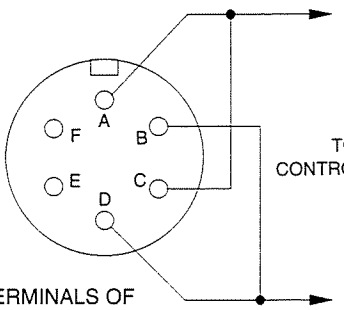

12 VOLT OPERATION

A TO C
B TO D
A AND D TO ACTUATOR TERMINALS OF SPEED CONTROL UNIT

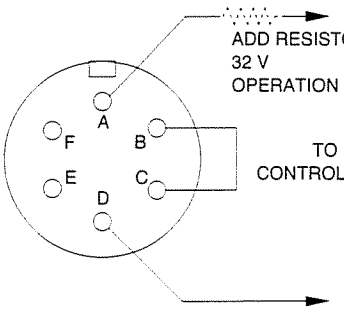

24 VOLT OPERATION

B TO C
A AND D TO ACTUATOR TERMINALS

ACB275F WIRING

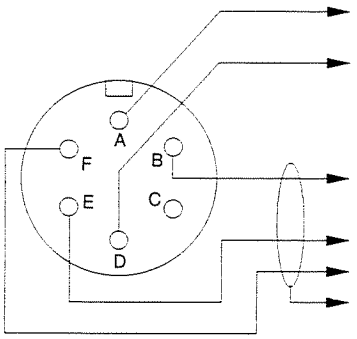

TO SPEED CONTROL UNIT
"ACTUATOR" TERMINALS

TO SPEED CONTROL UNIT
"POSITION SENSOR" TERMINALS

Katolight Service - Master Repair Manual - Page 2516

DIAGRAM 1 ACTUATOR OUTLINE

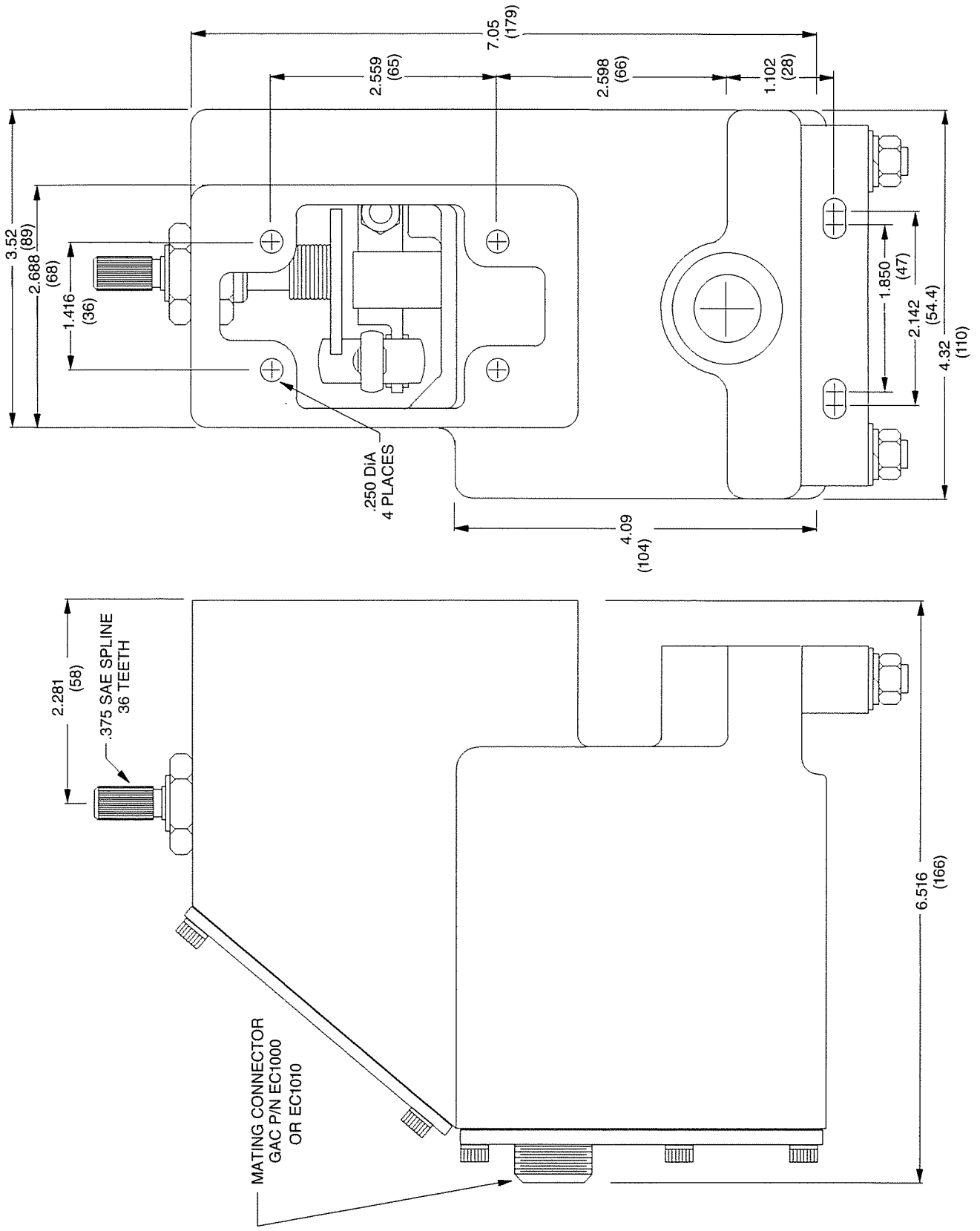

TROUBLESHOOTING

If the governor system fails to operate, make the following tests at the actuator mounted connector while moving the actuator through its stroke.

Measure the Resistance

	ACB275
A to B	2.5 ohms
C to D	2.5 ohms
A to C	Infinity
A to Housing	Infinity
C to Housing	Infinity
E to F	Infinity

Energize the actuator to full fuel (follow steps in control unit publication) and manually move the actuator through its range using the stop lever. No binding or sticking should occur.

If the actuator passes these tests, the problem is elsewhere in the system. Refer to the control unit troubleshooting publication.

GOVERNORS AMERICA CORP.

720 Silver St. • Agawam, MA 01001-2907, USA • (413) 786-5600

FAX (413) 786-5666

e-mail: info@governors-america.com

Internet: www.governors-america.com



ECU Engine Management Capabilities

Product Information

The new state-of-the-art Engine Control Module (ECM) designed for Power Solutions, Inc., incorporates all of the latest technology. The controller is designed to address the most current of customer concerns, including:

1. Closed-loop emissions capability as an affordable option at very little cost;
2. Ability to eliminate redundant sensors and functions;
3. Several available inputs and outputs to the engine controller; and
4. Availability of CAN J-1939-71.

Below is a more comprehensive list of the controller's functionality:

- Capable of running sequential or waste spark ignition systems.
- Includes real full authority electronic governing, without the use of additional mag sensors or components.
- Capable of running smart coil or traditional peak and hold ignition systems (current GM systems are smart coil).
- Currently capable of running spark-ignited engines up to 8 cylinders.
- An electric to dry fuel lock-off control is incorporated in the engine controller.
- The electric fuel pump power relay can be controlled by the engine controller (possible mobile gasoline applications).
- Has a built-in starter lockout feature to protect from starter damage.
- Has a built in auto-cranking feature specifically for Gen-set applications.
- Has a switch to ground to control a power relay, for possible initialization of other equipment.
- Fully capable of closed-loop control; additional components, such as 0 sensor, required.
- The controller has a built-in flight data recorder and records the last seconds of engine operation, even under engine fault or catastrophic conditions.
- Has a malfunction indicator light output, which is capable of "blink" codes.
- Governing speed select input lines for selecting 3 discreet speeds (for applications which require this feature).
- There are several spare auxiliary digital and analog inputs, pulled up or down, which can be used as general-purpose switches, etc., eliminating cost
- Engine protection features for typical failures, as well as some programmable advanced failure modes.
- The controller has spark maps for gasoline, LP, and NG (all are included).
- The controller has a tachometer output line.
- The controller has CANBUS, RS232, and RS485 communication drivers.
- Windows based interface, complete user friendly.

PSI
POWER SOLUTIONS, INC.
655 WHEAT LANE • WOOD DALE, IL 60191
PH: 630.350.9400 • FAX: 630.350.9900
WWW.POWER-SOLUTIONSONLINE.COM

PSI
POWER SOLUTIONS, INC.

ELECTRONIC MANAGEMENT SYSTEMS

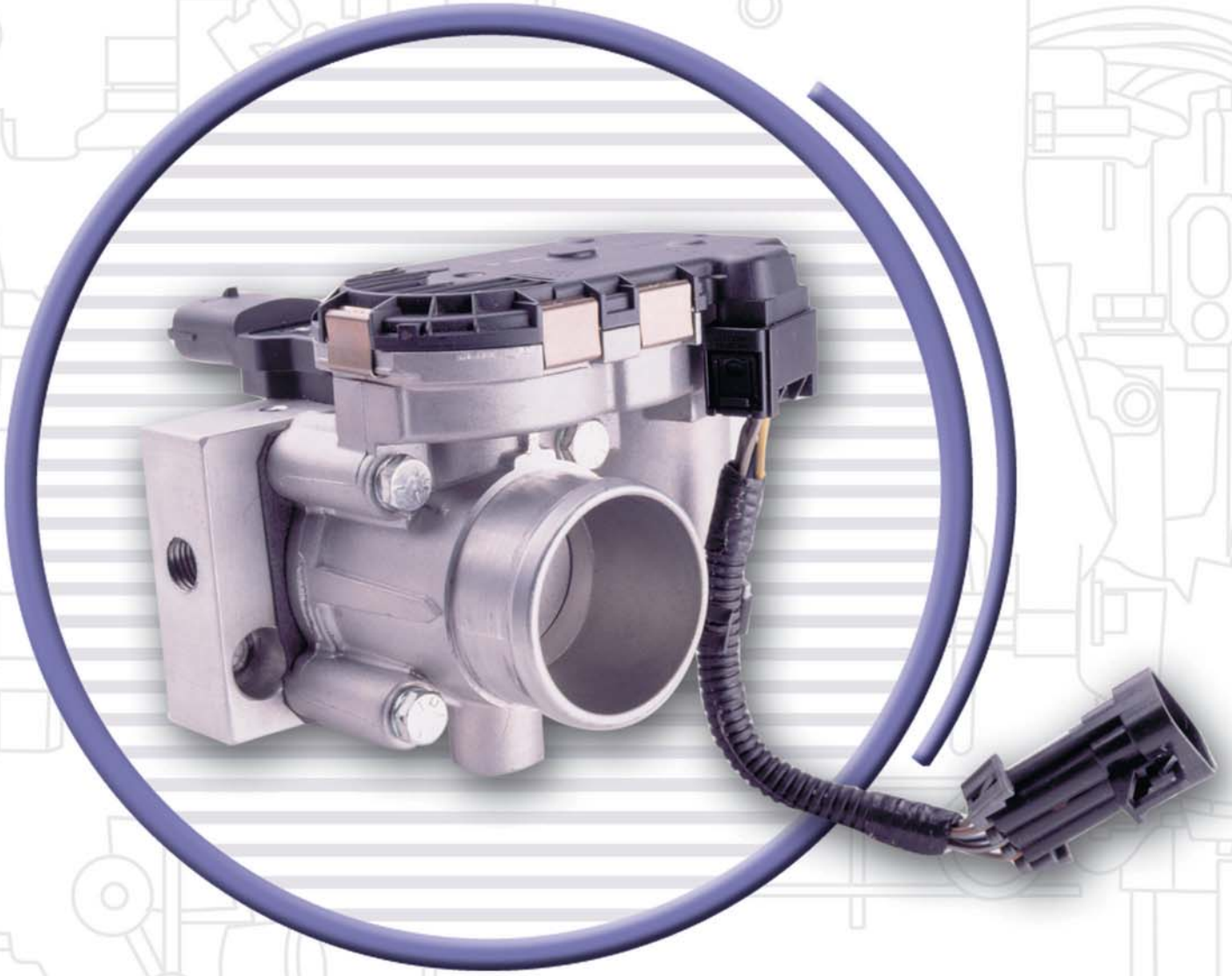

- 12 Volt System, 6-16V dc
- Throttle Bore Size Available =
  37mm, 40mm, 54mm, 60mm, 80mm
- Tested to 30G Vibration Loading
- Operating Temperature =
  -40 degrees Fahrenheit to 284 degrees Fahrenheit
- Storage Temperature =
  -40 degrees Fahrenheit to 284 degrees Fahrenheit
- Resistant to most industrial chemicals
- Torque = 1.7 N.m (1.25 lb-ft) @ 13.8 volts
- Meets 10 kv (human body) ESD Standards
- CE Compliant (in Europe)
- Throttle Susceptibility test in excess of
  200 volts per meter against electromagnetic fields











Product Information

Today's industrial engines need to comply with tomorrow's Tier II emission regulations. That's why you will need PSI's Electronic Management System (PEMS) to bring your engine into the next millennium. Our package meets all U.S. Automotive and European normalized standards. By electronically controlling the fuel delivery, horsepower and torque increase dramatically. PEMS is compact in size and is calibrated using the latest technology in Windows based computer software. Calibration time is reduced by more than 70% over most standard PID governors. PEMS also has a faster response standard than most PID governors and is capable of power limiting in any application. In case of an electrical failure, the PEMS unit always returns to the idle position for safety and to insure no damage to your engine. The throttle body unit has sealed bearings that are permanently lubed for long life.

The PEMS also delivers improved idle stability over most industrial electronic throttles using it's "plug and play" operating characteristics controlled by the ECU. A dual-path long-life potentiometer allows for redundancy and safety. Full power and torque is available over the full engine operating temperature range. The ECU is rated fully functional over a temperature range from -40 degrees Fahrenheit to 284 degrees Fahrenheit.

The PEMS also can be configured as a droop or Isochrynys governed installation with lightning fast accuracy, precision response, less over and under shoot than most standard PID governors. The unit utilizes feed forward algorithms based on engine operating conditions to calibrate fuel flow and give you the most economical usage.

TORQUE

HORSEPOWER

100

80

60

.60

.55

.50

.45

©2002 PGN 9789

PSI
POWER SOLUTIONS, INC.™
655 Wheat Lane • Wood Dale, IL 60191
Ph: 630.350.9400 • Fax: 630.350.9900
www.power-solutionsonline.com

Detroit Diesel Engine Control

Fault Code Instructions

The DDEC III/IV has many engine control functions. The following instructions are to retrieve some of the engine shut down fault codes.

1. Place the engine control switch in the test position. This will activate the ECM without starting the engine.

2. Press the diagnostic request button at the control panel. This will enable the ECM to flash the lights in a sequence that will give a two-digit code. The red light will indicate the active faults. The amber light will indicate the inactive faults. The cycle will repeat until the diagnostic request button is pressed again.

   - Active codes (red lights)-a fault present at the time the check is taking place.

   - Inactive codes (amber lights)-a fault which has previously occurred.

   For example: The red light flashes two times quickly, rests momentarily, and then flashes five more times. This indicates fault code twenty-five.

3. The DDC Code # on the following pages indicate the fault codes and their definitions.

4. Then take the necessary action to correct the fault.

5. Fault codes can only be cleared by using the diagnostic data reader (DDR).

6. To operate the unit, the engine control switch must be in the auto or manual position.

APPENDIX A: CODES

The codelisted may not be used in all applications. A default value in the normal operating range is used by the ECM to provide for engine operation if a sensor failure is present.

DDC Code # (Flashed)	PID	SID	FMI	Description
11	187	--	4	Variable Speed Governor Sensor Voltage Low
11	187	--	7	Variable Speed Governor Switch System Not Responding
12	187	--	3	Variable Speed Governor Sensor Voltage High
13	111	--	4	Coolant Level Sensor Input Voltage Low
13	111	--	6	Add Coolant Level Sensor Input Voltage Low
14	52	--	3	Intercooler Coolant Temperature Sensor Input Voltage High
14	110	--	3	Coolant Temperature Sensor Input Voltage High
14	175	--	3	Oil Temperature Sensor Input Voltage High
15	52	--	4	Intercooler Coolant Temperature Sensor Input Voltage Low
15	110	--	4	Coolant Temperature Sensor Input Voltage Low
15	175	--	4	Oil Temperature Sensor Input Voltage Low
16	111	--	3	Coolant Level Sensor Input Voltage High
16	111	--	5	Add Coolant Level Sensor Input Voltage High
17	51	--	3	Throttle Plate Position Sensor Input Voltage High
17	72	--	3	Blower Bypass Position Input Voltage High
17	354	—	3	Relative Humidity Sensor Circuit Failed High (Release 33.0 or later)
18	51	--	4	Throttle Plate Position Sensor Input Voltage Low
18	72	--	4	Blower Bypass Position Input Voltage Low
18	354	—	4	Relative Humidity Sensor Circuit Failed Low (Release 33.0 or later)
21	91	--	3	Throttle Position Sensor Input Voltage High
22	91	--	4	Throttle Position Sensor Input Voltage Low
23	174	--	3	Fuel Temperature Sensor Input Voltage High
23	--	65	3	Oxygen Content Circuit Input Voltage High
24	174	--	4	Fuel Temperature Sensor Input Voltage Low
24	--	65	4	Oxygen Content Circuit Input Voltage Low
25	--	--	--	Reserved for "No Codes"
26	--	25	11	Aux. Shutdown #1 Active
26	--	61	11	Aux. Shutdown #2 Active
27	105	--	3	Intake Manifold Temperature Sensor Input Voltage High
27	171	--	3	Ambient Air Temperature Sensor Input Voltage High
27	172	--	3	Air Temperature Sensor Input Voltage High
28	105	--	4	Intake Manifold Temperature Sensor Input Voltage Low

Katolight Service - Master Repair Manual - Page 2525

DDC Code # (Flashed)	PID	SID	FMI	Description
28	171	--	4	Ambient Air Temperature Sensor Input Voltage Low
28	172	--	4	Air Temperature Sensor Input Voltage Low
29	351	–	4	TCI Temperature Circuit Failed Low (Release 33.0 or later)
29	404	—	4	Turbo Compressor Temperature Out Sensor Input Voltage Low (Release 32.0 or later)
31	--	51	3	Aux. Output #3 Open Circuit (High Side) - S3
31	--	51	4	Aux. Output #3 Short To Ground (High Side) - S3
31	--	51	7	Aux. Output #3 Mechanical System Fail - S3
31	--	52	3	Aux. Output #4 Open Circuit (High Side) - T3
31	--	52	4	Aux. Output #4 Short to Ground (High Side) - T3
31	--	52	7	Aux. Output #4 Mechanical System Failure - T3
32	--	238	3	SEL Short to Battery (+)
32	--	238	4	SEL Open Circuit
32	--	239	3	CEL Short to Battery (+)
32	--	239	4	CEL Open Circuit
33	102	--	3	Turbo Boost Pressure Sensor Input Voltage High
34	102	--	4	Turbo Boost Pressure Sensor Input Voltage Low
35	19	--	3	High Range Oil Pressure Sensor Input Voltage High
35	100	--	3	Oil Pressure Sensor Input Voltage Low
36	19	--	4	High Range Oil Pressure Sensor Input Voltage High
36	100	--	4	Oil Pressure Sensor Input Voltage Low
37	18	--	3	High Range Fuel Pressure Sensor Input Voltage High
37	94	--	3	Fuel Pressure Sensor Input Voltage High
37	95	--	3	Fuel Restriction Sensor Input Voltage High
38	18	--	4	High Range Fuel Pressure Sensor Input Voltage Low
38	94	--	4	Fuel Pressure Sensor Input Voltage Low
38	95		4	Fuel Restriction Sensor Input Voltage Low
39	—	146	2	EGR Leak — Boost Power (Release 33.0 or later)
39	—	146	12	EGR Leak — Boost Jake (Release 33.0 or later)
39	—	146	7	EGR Valve Not Responding (Release 33.0 or later)
39	—	147	2	VNT Vanes Not Responding — Boost Power (Release 33.0 or later)
39	—	147	11	VNT Vanes at Max — Jake (Release 33.0 or later)
39	—	147	12	VNT Vanes Not Responding — Boost Jake (Release 33.0 or later)
39	—	147	14	EGR Flow too Low (Release 33.0 or later)
39	—	147	7	VNT Vanes Not Responding — EGR (Release 33.0 or later)
41	--	21	0	Too Many SRS (missing TRS)
42	--	21	1	Too few SRS (missing SRS)
43	111	--	1	Coolant Level Low
44	52	--	0	Intercooler Coolant Temperature High

All information subject to change without notice. (Rev. 5/03)
7SA743 0305 Copyright © 2003 DETROIT DIESEL CORPORATION

Katolight Service - Master Repair Manual - Page 2526

DDC Code # (Flashed)	PID	SID	FMI	Description
44	105	--	0	Intake Manifold Temperature High
44	110	--	0	Coolant Temperature High
44	172	--	0	Air Inlet Temperature High
44	175	--	0	Oil Temperature High
45	19	--	1	High Range Oil Pressure Low
45	100	--	1	Oil Pressure Low
46	168	--	1	ECM Battery Voltage Low
46	--	214	1	RTC Backup Battery Voltage Low (Release 29.0 or later)
46	--	232	1	Sensor Supply Voltage Low
47	18	--	0	High Range Fuel Pressure High
47	94	--	0	Fuel Pressure High
47	102	--	0	Turbo Boost Pressure High
47	106	--	0	Air Inlet Pressure High
47	164	--	0	Injection Control Pressure High
48	18	--	1	High Range Fuel Pressure Low
48	94	--	1	Fuel Pressure Low
48	106	--	1	Air Inlet Pressure Low
48	164	--	1	Injection Control Pressure Low
48	351	–	1	TCI Temperature Below Range (Release 33.0 or later)
48	404	—	1	Turbo Compressor Temperature Out High (Release 33.0 or later)
48	411	–	1	EGR Differential Pressure Low (Release 33.0 or later)
48	412	–	1	EGR Temperature Low (Release 33.0 or later)
49	351	–	0	TCI Temperature Above Range (Release 33.0 or later)
49	404	—	0	Turbo Compressor Out Temperature High (Release 32.0 or later)
51	351	–	3	TCI Temperature Circuit Failed High (Release 33.0 or later)
51	404	—	3	Turbo Compressor Out Temperature Sensor Input Voltage High (Release 32.0 or later)
52	--	254	12	A/D Conversion Fail
53	--	253	2	Nonvolatile Checksum Incorrect
53	--	253	12	EEPROM Write Error
53	--	253	13	Out of Calibration
54	84	--	12	Vehicle Speed Sensor Fault
55	--	216	14	Other ECU Fault (Release 27.0 or later) (This fault is logged in conjunction with another fault to indicate missing information from another ECU.)
55	--	231	12	J1939 Data Link Fault
55	--	248	8	Proprietary Data Link Fault (Master)
55	--	248	9	Proprietary Data Link Fault (Receiver)
56	--	250	12	J1587 Data Link Fault

 Copyright © 2003 DETROIT DIESEL CORPORATION

Katolight Service - Master Repair Manual - Page 2527

DDC Code # (Flashed)	PID	SID	FMI	Description
57	--	249	12	J1922 Data Link Fault
58	92	--	0	Torque Overload
61	--	xxx	0	Injector xxx Response Time Long
62	--	26	3	Aux. Output #1 Short to Battery (+) - F3
62	--	26	4	Aux. Output #1 Open Circuit - F3
62	—	26	7	Aux. Output #1 Mechanical System Not Responding Properly - F3
62	--	40	3	Aux. Output #2 Short to Battery (+) - A2
62	--	40	4	Aux. Output #2 Open Circuit - A2
62	—	40	7	Aux. Output #2 Mechanical System Not Responding Properly - A2
62	--	53	3	Aux. Output #5 Short to Battery (+) - W3
62	--	53	4	Aux. Output #5 Open Circuit - W3
62	—	53	7	Aux. Output #5 Mechanical System Not Responding Properly - W3
62	--	54	3	Aux. Output #6 Short to Battery (+) - X3
62	--	54	4	Aux. Output #6 Open Circuit - X3
62	--	54	7	Aux. Output #6 Mechanical System Not Responding Properly - X3
62	--	55	3	Aux. Output #7 Short to Battery (+) - Y3
62	--	55	4	Aux. Output #7 Open Circuit - Y3
62	—	55	7	Aux. Output #7 Mechanical System Not Responding Properly - Y3
62	--	56	3	Aux. Output #8 Short to Battery (+) - A1
62	--	56	4	Aux. Output #8 Open Circuit - A1
62	--	56	7	Aux. Output #8 Mechanical System Not Responding Properly - A1
63	--	57	0	PWM #1 Above Normal Range
63	--	57	1	PWM #1 Below Normal Range
63	--	57	3	PWM #1 Short to Battery (+)
63	--	57	4	PWM #1 Open Circuit
63	--	58	0	PWM #2 Above Normal Range
63	--	58	1	PWM #2 Below Normal Range
63	--	58	3	PWM #2 Short to Battery (+)
63	--	58	4	PWM #2 Open Circuit
63	--	59	0	PWM #3 Above Normal Range
63	--	59	1	PWM #3 Below Normal Range
63	--	59	3	PWM #3 Short to Battery (+)
63	--	59	4	PWM #3 Open Circuit
63	--	60	0	PWM #4 Above Normal Range
63	--	60	1	PWM #4 Below Normal Range
63	--	60	3	PWM #4 Short to Battery (+)
63	--	60	4	PWM #4 Open Circuit
64	103	--	0	Turbo Overspeed

All information subject to change without notice. (Rev. 5/03)
7SA743 0305 Copyright © 2003 DETROIT DIESEL CORPORATION

Katolight Service - Master Repair Manual - Page 2528

DDC Code # (Flashed)	PID	SID	FMI	Description
64	103	--	8	Turbo Speed Sensor Input Failure — Abnormal Period
65	51	--	0	Throttle Plate Position Above Normal Range
65	51	--	1	Throttle Plate Position Below Normal Range
65	51	--	2	Throttle Plate Position Erratic
65	51	--	7	Throttle Plate Not Responding
65	107	--	3	Air Filter Restriction Sensor Voltage High
65	107	--	4	Air Filter Restriction Sensor Voltage Low
66	99	--	3	Oil Filter Restriction Sensor Voltage High
66	99	--	4	Oil Filter Restriction Sensor Voltage Low
66	--	76	0	Engine Knock Level Above Normal Range
66	--	76	3	Engine Knock Level Sensor Input Voltage High
66	--	76	4	Engine Knock Level Sensor Input Voltage Low
66	--	76	7	Engine Knock Level Sensor Not Responding
67	20	--	3	High Range Coolant Pressure Sensor Input Voltage High
67	20	--	4	High Range Coolant Pressure Sensor Input Voltage Low
67	106	--	3	Air Inlet Pressure Sensor Input Voltage High
67	106	--	4	Air Inlet Pressure Sensor Input Voltage Low
67	109	--	3	Coolant Pressure Sensor Input Voltage High
67	109	--	4	Coolant Pressure Sensor Input Voltage Low
68	--	230	5	TPS Idle Validation Circuit Fault (open circuit)
68	--	230	6	TPS Idle Validation Circuit Fault (short to ground)
71	--	xxx	1	Injector xxx Response Time Short
72	84	--	0	Vehicle Overspeed
72	84	--	11	Vehicle Overspeed (Absolute)
72	--	65	0	Oxygen Content Too High
72	--	65	1	Oxygen Content Too Low
73	107	--	0	Air Filter Restriction High
73	--	77	0	Gas Valve Position Above Normal Range
73	--	77	1	Gas Valve Position Below Normal Range
73	--	77	3	Gas Valve Position Input Voltage High
73	--	77	4	Gas Valve Position Input Voltage Low
73	--	77	7	Gas Metering Valve Not Responding
73	--	151	14	ESS Transmission Stuck in Gear
73	--	226	11	Transmission Neutral Switch Failure (ESS Transmission)
73	--	227	2	Aux Analog Input Data Erratic, Intermittent, or Incorrect (ESS Transmission)
73	--	227	3	Aux Analog Input #1 Voltage High (ESS Transmission)
73	--	227	4	Aux Analog Input #1 Voltage Low (ESS Transmission)
74	70	--	4	Optimized Idle Safety Loop Short to Ground

7SA743 0305 Copyright © 2003 DETROIT DIESEL CORPORATION

Katolight Service - Master Repair Manual - Page 2529

DDC Code # (Flashed)	PID	SID	FMI	Description
74	99	--	0	Oil Filter Restriction High
75	168	--	0	ECM Battery Voltage High
75	--	214	0	RTC Backup Battery Voltage High (Release 29.0 or later)
75	--	232	0	Sensor Supply Voltage High
76	121	--	0	Engine Overspeed With Engine Brake
77	19	—	0	High Range Oil Pressure High
77	20	—	0	High Range Coolant Pressure High
77	72	—	0	Blower Bypass Door Position High
77	72	—	1	Blower Bypass Door Position Low
77	73	—	1	Fire Pump Pressure Low
77	81	—	0	Exhaust Back Pressure High
77	81	—	1	Exhaust Back Pressure Low
77	81	—	3	Exhaust Back Pressure Sensor Voltage High
77	81	—	4	Exhaust Back Pressure Sensor Voltage Low
77	81	—	12	Exhaust Back Pressure at Rampdown Threshold
77	95	—	1	Fuel Filter Differential Pressure Low
77	99	—	1	Oil Filter Differential Pressure Low
77	100	—	0	Engine Oil Pressure High
77	102	—	1	Turbo Boost Pressure Low
77	105	—	1	Inlet Manifold Temperature Low
77	107	—	1	Air filter Restriction Pressure Low
77	108	—	0	Barometric Pressure High
77	108	—	1	Barometric Pressure Low
77	109	—	0	Coolant Pressure High
77	110	—	1	Coolant Temperature Low
77	111	—	0	Coolant Level High
77	171	—	0	Ambient Air Temperature High
77	171	—	1	Ambient Air Temperature Low
77	172	—	1	Air Inlet Temperature Low
77	174	—	0	Fuel Temperature High
77	174	—	1	Fuel Temperature Low
77	175	—	1	Engine Oil Temperature Low
77	222	—	14	Anti-Theft Fault Present
77	251	—	10	Clock Module Abnormal Rate of Change
77	251	—	13	Clock Module Failure
77	252	—	10	Clock Module Abnormal Rate of Change
77	252	—	13	Clock Module Failure
77	354	—	0	Relative Humidity Above Range (Release 33.0 or later)
77	354	—	1	Relative Humidity Below Range (Release 33.0 or later)

All information subject to change without notice. (Rev. 5/03)
7SA743 0305 Copyright © 2003 DETROIT DIESEL CORPORATION

Katolight Service - Master Repair Manual - Page 2530

DDC Code # (Flashed)	PID	SID	FMI	Description
77	446	—	0	Cylinder Head Temperature Above Range (Release 33.0 or later)
77	—	151	11	Service Now Lamp Fault Expiration (Release 32.0 or later)
78	86	--	14	Cruise Control/Adaptive Cruise Control Fault (Release 27.0 or later)
81	98	--	3	Oil Level Sensor Input Voltage High
81	101	--	3	Crankcase Pressure Sensor Input Voltage High
81	153	--	3	Extended Crankcase Pressure Input Voltage High (Release 27.0 or later)
81	164	--	3	Injection Control Pressure Sensor Input Voltage High
81	173	--	3	Exhaust Temperature Sensor Input Voltage High
81	411	—	3	EGR Differential Pressure Sensor Circuit Failed High (Release 33.0 or later)
81	412	—	3	EGR Temperature Circuit Failed High (Release 33.0 or later)
81		20	3	Timing Actuator Failed High
81		20	4	Timing Actuator Failed Low
81	--	129	3	Exhaust Port Temperature #1 Sensor Voltage High (Release 32.0 or later)
81	--	130	3	Exhaust Port Temperature #2 Sensor Voltage High (Release 32.0 or later)
81	--	131	3	Exhaust Port Temperature #3 Sensor Voltage High (Release 32.0 or later)
81	--	132	3	Exhaust Port Temperature #4 Sensor Voltage High (Release 32.0 or later)
81	--	133	3	Exhaust Port Temperature #5 Sensor Voltage High (Release 32.0 or later)
81	--	134	3	Exhaust Port Temperature #6 Sensor Voltage High (Release 32.0 or later)
81	--	135	3	Exhaust Port Temperature #7 Sensor Voltage High (Release 32.0 or later)
81	--	136	3	Exhaust Port Temperature #8 Sensor Voltage High (Release 32.0 or later)
81	--	137	3	Exhaust Port Temperature #9 Sensor Voltage High (Release 32.0 or later)
81	--	138	3	Exhaust Port Temperature #10 Sensor Voltage High (Release 32.0 or later)
81	--	139	3	Exhaust Port Temperature #11 Sensor Voltage High (Release 32.0 or later)
81	--	140	3	Exhaust Port Temperature #12 Sensor Voltage High (Release 32.0 or later)
81	--	141	3	Exhaust Port Temperature #13 Sensor Voltage High (Release 32.0 or later)
81	--	142	3	Exhaust Port Temperature #14 Sensor Voltage High (Release 32.0 or later)
81	--	143	3	Exhaust Port Temperature #15 Sensor Voltage High (Release 32.0 or later)
81	--	144	3	Exhaust Port Temperature #16 Sensor Voltage High (Release 32.0 or later)

Katolight Service - Master Repair Manual - Page 2531

DDC Code # (Flashed)	PID	SID	FMI	Description
81	—	277	9	EGR Mass Flow Smart Sensor not Responding (Release 33.0 or later)
81	—	277	12	EGR Mass Flow Smart Sensor Failed (Release 33.0 or later)
82	98	--	4	Oil Level Sensor Input Voltage Low
82	101	--	4	Crankcase Pressure Sensor Input Voltage Low
82	153	--	4	Extended Crankcase Pressure Input Voltage Low (Release 27.0 or later)
82	164	--	4	Injection Control Pressure Sensor Input Voltage Low
82	173	--	4	Exhaust Temperature Sensor Input Voltage Low
82	411	—	4	EGR Diffferential Pressure Sensor Circuit Failed Low (Release 33.0 or later)
82	412	—	4	EGR Temperature Circuit Failed Low (Release 33.0 or later)
82	--	129	4	Exhaust Port Temperature #1 Sensor Voltage Low (Release 32.0 or later)
82	--	130	4	Exhaust Port Temperature #2 Sensor Voltage Low (Release 32.0 or later)
82	--	131	4	Exhaust Port Temperature #3 Sensor Voltage Low (Release 32.0 or later)
82	--	132	4	Exhaust Port Temperature #4 Sensor Voltage Low (Release 32.0 or later)
82	--	133	4	Exhaust Port Temperature #5 Sensor Voltage Low (Release 32.0 or later)
82	--	134	4	Exhaust Port Temperature #6 Sensor Voltage Low (Release 32.0 or later)
82	--	135	4	Exhaust Port Temperature #7 Sensor Voltage Low (Release 32.0 or later)
82	--	136	4	Exhaust Port Temperature #8 Sensor Voltage Low (Release 32.0 or later)
82	--	137	4	Exhaust Port Temperature #9 Sensor Voltage Low (Release 32.0 or later)
82	--	138	4	Exhaust Port Temperature #10 Sensor Voltage Low (Release 32.0 or later)
82	--	139	4	Exhaust Port Temperature #11 Sensor Voltage Low (Release 32.0 or later)
82	--	140	4	Exhaust Port Temperature #12 Sensor Voltage Low (Release 32.0 or later)
82	--	141	4	Exhaust Port Temperature #13 Sensor Voltage Low (Release 32.0 or later)
82	--	142	4	Exhaust Port Temperature #14 Sensor Voltage Low (Release 32.0 or later)
82	--	143	4	Exhaust Port Temperature #15 Sensor Voltage Low (Release 32.0 or later)
82	--	144	4	Exhaust Port Temperature #16 Sensor Voltage Low (Release 32.0 or later)
82	412	—	9	EGR Temperature Smart Sensor not Responding (Release 33.0 or later)
82	412	—	12	EGR Temperature Smart Sensor Failed (Release 33.0 or later)
83	73	—	0	Pump Pressure High

All information subject to change without notice. (Rev. 5/03)
7SA743 0305 Copyright © 2003 DETROIT DIESEL CORPORATION

Katolight Service - Master Repair Manual - Page 2532

DDC Code # (Flashed)	PID	SID	FMI	Description
83	98	--	0	Oil Level High
83	101	--	0	Crankcase Pressure High
83	153	--	0	Extended Crankcase Pressure High (Release 27.0 or later)
83	173	--	0	Exhaust Temperature High
83	411	—	0	EGR Differential Pressure High (Release 33.0 or later)
83	412	—	0	EGR Temperature High (Release 33.0 or later)
83	--	129	0	Exhaust Port Temperature #1 Sensor Voltage High (Release 32.0 or later)
83	--	130	0	Exhaust Port Temperature #2 Sensor Voltage High (Release 32.0 or later)
83	--	131	0	Exhaust Port Temperature #3 Sensor Voltage High (Release 32.0 or later)
83	--	132	0	Exhaust Port Temperature #4 Sensor Voltage High (Release 32.0 or later)
83	--	133	0	Exhaust Port Temperature #5 Sensor Voltage High (Release 32.0 or later)
83	--	134	0	Exhaust Port Temperature #6 Sensor Voltage High (Release 32.0 or later)
83	--	135	0	Exhaust Port Temperature #7 Sensor Voltage High (Release 32.0 or later)
83	--	136	0	Exhaust Port Temperature #8 Sensor Voltage High (Release 32.0 or later)
83	--	137	0	Exhaust Port Temperature #9 Sensor Voltage High (Release 32.0 or later)
83	--	138	0	Exhaust Port Temperature #10 Sensor Voltage High (Release 32.0 or later)
83	--	139	0	Exhaust Port Temperature #11 Sensor Voltage High (Release 32.0 or later)
83	--	140	0	Exhaust Port Temperature #12 Sensor Voltage High (Release 32.0 or later)
83	--	141	0	Exhaust Port Temperature #13 Sensor Voltage High (Release 32.0 or later)
83	--	142	0	Exhaust Port Temperature #14 Sensor Voltage High (Release 32.0 or later)
83	--	143	0	Exhaust Port Temperature #15 Sensor Voltage High (Release 32.0 or later)
83	--	144	0	Exhaust Port Temperature #16 Sensor Voltage High (Release 32.0 or later)
84	98	--	1	Oil Level Low
84	101	--	1	Crankcase Pressure Low
84	153	--	1	Extended Crankcase Pressure Low (Release 27.0 or later)
85	190	--	0	Engine Overspeed
85	190	--	14	Engine Overspeed Signal (Release 28.0 or later)
86	73	--	3	Pump Pressure Sensor Input Voltage High
86	108	--	3	Barometric Pressure Sensor Input Voltage High
87	73	--	4	Pump Pressure Sensor Input Voltage Low
87	108	--	4	Barometric Pressure Sensor Input Voltage Low

 Copyright © 2003 DETROIT DIESEL CORPORATION

Katolight Service - Master Repair Manual - Page 2533

DDC Code # (Flashed)	PID	SID	FMI	Description
88	20	--	1	High Range Coolant Pressure Low
88	109	--	1	Coolant Pressure Low
89	95	--	0	Fuel Restriction High
89	111	--	12	Maintenance Alert Coolant Level Fault

All information subject to change without notice. (Rev. 5/03)
7SA743 0305 Copyright © 2003 DETROIT DIESEL CORPORATION

Katolight Service - Master Repair Manual - Page 2534

Flash Code	SAE Faults	DDEC System Description
73	S 227 3	ESS fault - aux. analog input #1 voltage high
73	S 227 4	ESS fault - aux. analog input #1 voltage low
74	p 70 4	Safety loop shorted to gnd
74	p 99 0	Oil filter restriction high
75	p 168 0	Battery voltage high
75	s 214 0	RTC backup battery voltage high
75	s 232 0	Sensor supply voltage high
76	p 121 0	Engine overspeed with engine brake
77	p 3 0	Cylinder head temperature above range
77	p 19 0	Extended range oil pressure above range
77	p 20 0	Extended range coolant pressure above range
77	p 72 0	Bypass blower door position above range
77	p 72 1	Bypass blower door positon below range
77	p 73 1	Fire pump pressure below range
77	p 81 0	Exhaust backpressure above range
77	p 81 1	Exhaust backpressure below range
77	p 81 12	Exhaust backpressure at rampdown threshold
77	p 81 3	Exhaust backpressure failed high
77	p 81 4	Exhaust backpressure failed low
77	p 95 1	Fuel filter differential pressure below range
77	p 99 1	Oil filter differential pressure below range
77	p 100 0	Engine oil pressure above range
77	p 102 1	Turbo boost pressure below range
77	p 105 1	Inlet manifold temperature below range
77	p 107 1	Air filter differential pressure below range
77	p 354 0	Relative humidity above range
77	p 354 1	Relative humidity below range
77	p 108 0	Barometric pressure above range
77	p 108 1	Barometric pressure below range
77	p 109 0	Coolant pressure above range
77	p 110 1	Coolant temperatuare below range
77	p 111 0	Coolant level above range
77	p 171 0	Ambient air temperature above range
77	p 171 1	Ambient air temperature below range
77	p 172 1	Air inlet temperature below range
77	p 174 0	TCO temp above range (temporary code)
77	p 174 0	Fuel temperature above range
77	p 174 1	TCO temp below range (temporary code)
77	p 174 1	Fuel temperature below range
77	p 175 1	Engine oil temperature below range
77	p 177 0	Transmission oil temperature above range
77	p 177 1	Transmission oil temperature below range
77	p 177 3	Transmission oil temperature failed high
77	p 177 4	Transmission oil temperature failed low
77	p 222 14	Anti-theft fault present
77	p 251 10	Clock module abnormal rate of change
77	p 251 13	Clock module failure
77	p 252 10	Clock module abnormal rate of change
77	p 252 13	Clock module failure

Flash Code	SAE Faults	DDEC System Description
77	p 446 0	Cylinder head temperature above range
78	p 86 14	Cruise control / adaptive cruise control
81	p 98 3	Oil level circuit failed high
81	p 101 3	Crankcase press. circuit failed high
81	p 153 3	High res crankcase press. circuit failed high
81	s 154 3	EGR temp circuit failed high (Rel. 32)
81	s 155 3	EGR delta pressure circuit failed high (Rel. 32)
81	p 164 3	Injection cntl press circuit failed high
81	p 173 3	Exhaust gas temperature circuit failed high
81	s 277 9	EGR mass flow smart sensor not responding
81	s 277 12	EGR mass flow smart sensor failed
81	p 411 3	EGR delta pressure circuit failed high
81	p 412 3	EGR temperature circuit failed high
81	s 412 9	EGR temp smart sensor not responding
81	s 412 12	EGR temperature smart sensor failed
82	p 98 4	Oil level circuit failed low
82	p 101 4	Crankcase press. circuit failed low
82	p 153 4	High res crankcase press. circuit failed low
82	s 154 4	EGR temperature circuit failed low (Ref. 32)
82	s 155 4	EGR delta pressure circuit failed low (Ref. 32)
82	p 164 4	Injection cntl press circuit failed low
82	p 173 4	Exhaust gas temperature circuit failed low
82	p 411 4	EGR delta pressure circuit failed low
82	p 412 4	EGR temperature circuit failed low
83	p 73 0	Aux. pump pressure above range
83	p 98 0	Oil level high
83	p 101 0	Crankcase pressure high
83	p 153 0	High res crankcase Pressure high
83	s 154 0	EGR gas temperature high (Ref. 32)
83	s 155 0	EGR delta pressure high (Ref. 32)
83	p 173 0	Exhaust gas temperature high
83	p 411 0	EGR delta pressure high
83	p 412 0	EGR temperature high
84	p 98 1	Oil level low
84	p 101 1	Crankcase pressure low
84	p 153 1	High res crankcase pressure low
85	p 190 0	Engine overspeed
85	p 190 14	Engine overspeed signal
86	p 73 3	Aux. pump pressure circuit failed high
86	p 108 3	Baro. pressure circuit failed high
87	p 73 4	Aux. pump pressure circuit failed low
87	p 108 4	Baro. pressure circuit failed low
88	p 20 1	Ext range coolant pressure low
88	p 109 1	Coolant pressure low
89	p 95 0	Fuel filter restriction high
89	p 111 12	Maintenance monitor coolant level fault

DETROIT DIESEL

A DaimlerChrysler Company

DETROIT DIESEL

DDEC® III/IV DIAGNOSTIC CODES

Flash Code	SAE Faults	DDEC System Description
11	p 187 4	PTO input failed low
11	p 187 7	PTO switch system not responding
12	p 187 3	PTO input failed high
13	p 111 4	Coolant level circuit failed low
13	p 111 6	2nd coolant level circuit failed low
14	p 52 3	Intercooler coolant temp. circuit failed high
14	p 110 3	Coolant temp. circuit failed high
14	p 175 3	Oil temp. circuit failed high
15	p 52 4	Intercooler coolant temp. circuit failed low
15	p 110 4	Coolant temp. circuit failed low
15	p 175 4	Oil temp. circuit failed low
16	p 111 3	Coolant level circuit failed high
16	p 111 5	2nd coolant level circuit failed high
17	p 51 3	Throttle position circuit failed high
17	p 72 3	Bypass position circuit failed high
17	p 354 3	Relative humidity sensor circuit failed high
18	p 51 4	Throttle position circuit failed low
18	p 72 4	Bypass position circuit failed low
18	p 354 4	Relative humidity sensor circuit failed low
21	p 91 3	TPS circuit failed high
22	p 91 4	TPS circuit failed low
23	s 65 3	Oxygen content circuit failed high
23	p 174 3	Fuel temp. circuit failed high
24	s 65 4	Oxygent content circuit failed low
24	p 174 4	Fuel temp. circuit failed low
25		Reserved for “no codes”
26	s 25 11	Aux. shutdown #1 active
26	s 61 11	Aux. shutdown #2 active
27	p 105 3	Intake manifold temp. circuit failed high
27	p 171 3	Ambient air temp circuit failed high
27	p 172 3	Air temp. circuit failed high
28	p 105 4	Intake manifold temp. circuit failed low
28	p 171 4	Ambient air temp circuit failed low
28	p 172 4	Air temp. circuit failed low
29	p 404 4	TCO temp circuit failed low
29	p 351 4	TCi temp circuit failed low
31	s 51 3	Aux. Output #3 open circuit (high side)
31	s 51 4	Aux. Output #3 short to ground (high side)
31	s 51 7	Aux. Output #3 mech. system fail
31	s 52 3	Aux. Output #4 open circuit (high side)
31	s 52 4	Aux. Output #4 short to ground (high side)
31	s 52 7	Aux. Output #4 mech. system fail
32	s 238 3	SEL short to battery
32	s 238 4	SEL open circuit

Detroit Diesel®, Detroit Diesel with spinning arrows design®, and DDEC® are registered trademarks of Detroit Diesel Corporation.
7SE414 0304 © Copyright 2003 Detroit Diesel Corporation. All rights reserved. Printed in U.S.A.

DDEC® III/IV Flash Codes and SAE Faults

O READ CODES: Use the diagnostic data reader or depress and hold the diagostic request switch with the ignition on, engine at idle or not running. Press and old the switch. Active codes will be flashed on the stop engine light, followed by yhe inactive codes being flashed on the check engine light. The cycle will repeat ntil the operator releases the diagnostic request switch.

Flash Code	SAE Faults	DDEC System Description
32	s 239 3	CEL short to battery
32	s 239 4	CEL open circuit
33	p 102 3	Boost pressure circuit failed high
34	p 102 4	Boost pressure circuit failed low
35	p 19 3	Ext range oil pressure circuit failed high
35	p 100 3	Oil pressure circuit failed high
36	p 19 4	Ext range oil pressure circuit failed low
36	p 100 4	Oil pressure circuit failed low
37	p 18 3	Ext range fuel pressure circuit failed high
37	p 94 3	Fuel pressure circuit failed high
37	p 95 3	Fuel filter restriction circuit failed high
38	p 18 4	Ext range fuel pressure circuit failed low
38	p 94 4	Fuel pressure circuit failed low
38	p 95 4	Fuel filter restriction circuit failed low
39	s 146 2	EGR leak - boost power
39	s 146 12	EGR leak - boost Jake
39	s 146 7	EGR valve not responding
39	s 147 2	VNT vanes not responding - boost power
39	s 147 12	VNT vanes not responding - boost Jake
39	s 147 14	EGR flow too low
39	s 147 11	VNT vanes at max - Jake
39	s 147 7	VNT vanes not responding - EGR
39	s 152 7	EGR valve not responding (temporary code)
39	s 153 7	VNT Vanes not responding (temporary code)
41	s 21 0	Too many SRS (missing TRS)
42	s 21 1	Too few SRS (missing SRS)
43	p 111 1	Coolant level low
44	p 52 0	Intercooler coolant temp high
44	p 105 0	Intake manifold temp high
44	p 110 0	Coolant temp high
44	p 172 0	Air inlet temp high
44	p 175 0	Oil temp high
	p 110 14	Coolant temperatuare high - derate
45	p 19 1	Ext range oil pressure low
45	p 100 1	Oil pressure low
46	p 168 1	Battery voltage low
46	s 214 1	RTC backup battery voltage low
46	s 232 1	Sensor supply voltage low
47	p 18 0	Ext range fuel pressure high
47	p 94 0	Fuel pressure high
47	p 102 0	Turbo boost press high
47	p 106 0	Air inlet pressure high or TCBV diff press high
47	p 164 0	Injection control pressure high
48	p 18 1	Ext range fuel pressure low
48	p 94 1	Fuel pressure low
48	p 106 1	Air inlet pressure low
48	s 154 1	EGR temperature low (temporary code)
48	s 155 1	EGR delta pressure low (temporary code)
48	p 164 1	Injection control pressure low
48	p 351 1	TCI temp below range
48	p 404 1	TCO temp below range
48	p 411 1	EGR Delta pressure low
48	p 412 1	EGR Temp low
49	p 351 0	TCI Temp above range
49	p 404 0	TCO Temp above range
	p 404 14	TCO Temp - derate
51	p 351 3	TCI Temp circuit failed high
51	p 404 3	TCO Temp circuit failed high
52	s 254 12	A/D Conversion fail
53	s 253 12	EEPROM write error
53	s 253 13	Out of calibration
53	s 253 2	Nonvolatile checksum incorrect
54	p 84 12	Vehicle speed sensor fault
55	s 216 14	Missing other ECU information
55	s 231 12	J1939 data link fault
55	s 248 8	Proprietary link fault (master)
55	s 248 9	Proprietary link fault (slave)
56	s 250 12	J1587 data link fault
57	s 249 12	J1922 data link fault
58	p 92 0	Torque overload
61	s 1 0	Injector #1 response time long
61	s 2 0	Injector #2 response time long
61	s 3 0	Injector #3 response time long
61	s 4 0	Injector #4 response time long
61	s 5 0	Injector #5 response time long
61	s 6 0	Injector #6 response time long
62	s 26 3	Aux Output #1 short to battery
62	s 26 4	Aux Output #1 open circuit
62	s 26 7	Aux Output #1 mech system fail
62	s 40 3	Aux Output #2 short to battery
62	s 40 4	Aux Output #2 open circuit
62	s 40 7	Aux Output #2 mech system fail
62	s 53 3	Aux Output #5 short to battery
62	s 53 4	Aux Output #5 open circuit
62	s 53 7	Aux Output #5 mech system fail
62	s 54 3	Aux Output #6 short to battery
62	s 54 4	Aux Output #6 open circuit
62	s 54 7	Aux Output #6 mech system fail
62	s 55 3	Aux Output #7 short to battery
62	s 55 4	Aux Output #7 open circuit
62	s 55 7	Aux Output #7 mech system fail
62	s 56 3	Aux Output #8 short to battery
62	s 56 4	Aux Output #8 open circuit
62	s 56 7	Aux Output #8 mech system fail
63	s 57 0	PWM #1 above normal range
63	s 57 1	PWM #1 below normal range
63	s 57 3	PWM #1 short to battery
63	s 57 4	PWM #1 open circuit
63	s 58 0	PWM #2 above normal range
63	s 57 1	PWM #2 below normal range
63	s 57 3	PWM #2 short to battery
63	s 58 4	PWM #2 open circuit
63	s 59 0	PWM #3 above normal range
63	s 59 1	PWM #3 below normal range
63	s 59 3	PWM #3 short to battery
63	s 59 4	PWM #3 open circuit
63	s 60 0	PWM #4 above normal range
63	s 60 1	PWM #4 below normal range
63	s 60 3	PWM #4 short to battery
63	s 60 4	PWM #4 open circuit
64	p 103 0	Turbo overspeed
64	p 103 8	Turbo speed circuit failed
65	p 51 0	Throttle position above range
65	p 51 1	Throttle position below range
65	p 51 2	Throttle position erratic
65	P 51 7	Throttle not responding
65	p 107 3	Air filter restriction circuit failed high
65	p 107 4	Air filter restriction circuit failed low
66	s 76 0	Knock control above range
66	s 76 3	Knock control circuit shorted high
66	s 76 4	Knock control circuit shorted low
66	s 76 7	No response to knock control
66	p 99 3	Oil filter restriction circuit failed high
66	p 99 4	Oil filter restriction circuit failed low
67	p 20 3	Ext range coolant pressure circuit failed high
67	p 20 4	Ext range coolant pressure circuit failed low
67	p 106 3	Air inlet pressure circuit failed high
67	p 106 4	Air inlet pressure circuit failed low
67	p 109 3	Coolant pressure circuit failed high
67	p 109 4	Coolant pressure circuit failed low
68	s 230 5	IVS circuit fault, open circuit
68	s 230 6	IVS circuit fault, grounded circuit
71	s 1 1	Injector #1 response time short
71	s 2 1	Injector #2 response time short
71	s 3 1	Injector #3 response time short
71	s 4 1	Injector #4 response time short
71	s 5 1	Injector #5 response time short
71	s 6 1	Injector #6 response time short
72	s 65 0	Oxygen content too high
72	s 65 1	Oxygen content too low
72	p 84 0	Vehicle overspeed
72	p 84 11	Vehicle overspeed (absolute)
73	s 77 0	Gas metering valve data above range
73	s 77 1	Gas metering valve data below range
73	s 77 3	Gas metering valve circuit shorted high
73	s 77 4	Gas metering valve circuit shorted low
73	s 77 7	Gas metering valve not responding
73	p 107 0	Air filter restriction high
73	s 151 14	ESS fault - stuck in gear detected
73	s 227 11	Transmission neutral switch fault not identifiable
73	s 227 2	ESS fault - aux. analog input #1 data incorrect

Katolight Service - Master Repair Manual - Page 2536



DPG-21XX-001
Digital Governor

APECS® Programmable Governor for Isochronous Generators

User Manual

Manual 36526

WARNING

Read this entire manual and all other publications pertaining to the work to be performed before installing, operating, or servicing this equipment. Practice all plant and safety instructions and precautions. Failure to follow instructions can cause personal injury and/or property damage.

The engine, turbine, or other type of prime mover should be equipped with an overspeed shutdown device to protect against runaway or damage to the prime mover with possible personal injury, loss of life, or property damage.

The overspeed shutdown device must be totally independent of the prime mover control system. An overtemperature or overpressure shutdown device may also be needed for safety, as appropriate.

CAUTION

To prevent damage to a control system that uses an alternator or battery-charging device, make sure the charging device is turned off before disconnecting the battery from the system.

Electronic controls contain static-sensitive parts. Observe the following precautions to prevent damage to these parts.

- **Discharge body static before handling the control (with power to the control turned off, contact a grounded surface and maintain contact while handling the control).**
- **Avoid all plastic, vinyl, and Styrofoam (except antistatic versions) around printed circuit boards.**
- **Do not touch the components or conductors on a printed circuit board with your hands or with conductive devices.**

Woodward Governor Company reserves the right to update any portion of this publication at any time. Information provided by Woodward Governor Company is believed to be correct and reliable. However, no responsibility is assumed by Woodward Governor Company unless otherwise expressly undertaken.

© Woodward 2004
All Rights Reserved

Contents

ELECTROSTATIC DISCHARGE AWARENESS III

CHAPTER 1. GENERAL INFORMATION 1
Introduction 1

CHAPTER 2. GOVERNOR SPECIFICATIONS 2
Configurations 2
Electrical 2
Mechanical 2
Performance 2
User Interface Operation 3
Keypad 3
Gain Potentiometer 3
LED 3
COMM Port 3

CHAPTER 3. PARAMETER REFERENCE 4
3.1 No. of Flywheel Teeth or Pulses per Revolution 7
3.2 Set Speed A (required) 7
3.3 Set Speed B (optional) 8
3.4 Idle Speed (optional) 8
3.5 Proportional (required) 8
3.6 Integral (required) 9
3.7 Derivative (required) 9
3.8 Gain at Set Speed A (required) 9
3.9 Overall Gain at Set Speed B (optional) 10
3.10 Overall Gain at Idle Speed (optional) 10
3.11 Gain Factor (required) 10
3.12 Speed Filter (required) 10
3.13 Idle Hold Time (optional) 11
3.14 Accel Rate (optional) 11
3.15 Decel Rate (optional) 11
3.16 Startup Rate (optional) 12
3.17 Integral Low Limit (optional) 12
3.18 Integral High Limit (optional) 13
3.19 Password (optional) 13
3.20 Overspeed Limit (optional) 14
3.21 Set Speed A Min (optional) 14
3.22 Set Speed A Max (optional) 14
3.23 Set Speed B Min (optional) 14
3.24 Set Speed B Max (optional) 15
3.25 Idle Speed Min (optional) 15
3.26 Idle Speed Max (optional) 15
3.27 Duty Cycle Limit (optional) 15
3.28 Startup Speed (optional) 15
3.29 Startup Duty Cycle (optional) 16

CHAPTER 4. UNIVERSAL PST 17
Introduction 17
Features 17
Universal PST Requirements 17
Acquiring Universal PST 18
Installing Universal PST 18
Wiring the COMM Port to a PC 18
Universal PST User Interface Overview 19
Table View 19
Chart View 19
Universal PST for DPG Menu Items 20

Katolight Service - Master Repair Manual - Page 2539

Parameter Setup 20
Status View 21
Tuning View 22
Chart Recorder 22

CHAPTER 5 CALIBRATION INSTRUCTIONS 24
Basic Adjustments 24
Tuning Methodology 24

CHAPTER 6. INSTALLATION INSTRUCTIONS 26
Recommended Mounting 26
DPG-2101-001 26
Terminal Descriptions 26
Wiring Diagram 26
DPG-2111-001 27
Terminal Descriptions 27
Wiring Diagram 27
DPG-2145-001 28
Terminal Descriptions 28
Wiring Diagram 28
DPG-2146-001 29
Terminal Descriptions 29
Wiring Diagram 29
DPG-2155-001 30
Terminal Descriptions 30
Wiring Diagram 30

CHAPTER 7 DIAGNOSTICS & TROUBLESHOOTING 31
LED Indications 31
Troubleshooting Table 31

CHAPTER 8. SERVICE OPTIONS 33
Product Service Options 33
Replacement/Exchange 33
Flat Rate Repair 34
Flat Rate Remanufacture 34
Returning Equipment for Repair 34
Packing a Control 34
Return Authorization Number 35
Replacement Parts 35
How to Contact Woodward 35
Engineering Services 36
Technical Assistance 37

Katolight Service - Master Repair Manual - Page 2540

Electrostatic Discharge Awareness

All electronic equipment is static-sensitive, some components more than others. To protect these components from static damage, you must take special precautions to minimize or eliminate electrostatic discharges.

Follow these precautions when working with or near the control.

1. Before doing maintenance on the electronic control, discharge the static electricity on your body to ground by touching and holding a grounded metal object (pipes, cabinets, equipment, etc.).

2. Avoid the build-up of static electricity on your body by not wearing clothing made of synthetic materials. Wear cotton or cotton-blend materials as much as possible because these do not store static electric charges as much as synthetics.

3. Keep plastic, vinyl, and Styrofoam materials (such as plastic or Styrofoam cups, cup holders, cigarette packages, cellophane wrappers, vinyl books or folders, plastic bottles, and plastic ash trays) away from the control, the modules, and the work area as much as possible.

4. Do not remove the printed circuit board (PCB) from the control cabinet unless absolutely necessary. If you must remove the PCB from the control cabinet, follow these precautions:

   - Do not touch any part of the PCB except the edges.
   - Do not touch the electrical conductors, the connectors, or the components with conductive devices or with your hands.
   - When replacing a PCB, keep the new PCB in the plastic antistatic protective bag it comes in until you are ready to install it. Immediately after removing the old PCB from the control cabinet, place it in the antistatic protective bag.



CAUTION

To prevent damage to electronic components caused by improper handling, read and observe the precautions in Woodward manual 82715, *Guide for Handling and Protection of Electronic Controls, Printed Circuit Boards, and Modules*.

Katolight Service - Master Repair Manual - Page 2541

Chapter 1.
General Information

Introduction

The DPG-21XX-001digital governor is used primarily to govern diesel or gas fueled engines of generator sets. This microprocessor based, digital controller performs across a wide speed range and allows adjustment of set speed and gain parameters with the built-in user interface. The COMM port provides access to all other governor settings to allow adaptation to each application.

Separately programmable Proportional, Integral, and Derivative gains are provided for tailoring governor response to many engine applications. Other adjustments include acceleration and deceleration ramp rates, idle speed set, hold time, and more.

Properly tuned, this governor delivers fast engine response to speed or load change while providing precise stable isochronous operation.

The governor's internal FAILSAFE reacts instantly to loss of the engine speed signal, allowing the actuator to return to minimum fuel.

Features include:

- Isochronous speed control
- User friendly / operator adjustable
- Precision frequency control
- Superior temperature stability
- Reverse battery protection
- Input voltage range: 9-30 Vdc
- Remote setup
- Serial communication port

Actuator Compatibility:

DYNA 2000	DYNA 7000	DYNA 8000
DYNA 2500	DYNA 70025	DYNA 8200
Power Flow Gas Valves		DYNA 8400
DYNA 10141		

Other Models Available:

DPG-2200 Series – for Genset Applications
DPG-2300 Series – for Off-Road Vehicles
DPG-2401 Series – for EFC Valve Applications

Katolight Service - Master Repair Manual - Page 2542

Chapter 2.
Governor Specifications

The governor's main electrical and mechanical specifications are listed here along with several performance characteristics. The DPG-21XX-001 Series governors are available in five hardware configurations.

Configurations

Model No.	Connector Style Options		Speed Sensing Options		Adj. Set Speeds	Remote Speed INC and DEC
	7-wire Euro	12-pin Molex	Magnetic Pickup	Ignition Sense		
DPG-2101-001	*		*		1 + idle	
DPG-2111-001	*		*		1 + idle	
DPG-2146-001	*			*	1 + idle	
DPG-2145-001		*		*	2 + idle	*
DPG-2155-001		*	*		2 + idle	*

Electrical

Operating Voltages:	9 Vdc minimum to 30 Vdc maximum
Maximum Controlled Output Current:	7 A
Maximum Surge Current:	14 A for ten seconds
Connections:	Terminal strip with 7 terminals or a quick connector with 12 pins
Input Signal from Magnetic Pickup:	2.0 VAC RMS minimum during cranking
Input Signal from the Engine's Ignition System	40 V minimum during cranking

Mechanical

Ambient Operating Temperature:	-40°F to +185°F (-40°C to +85°C)
Sealing:	Oil, water, and dust resistant via conformal coating and die cast enclosure
Weight:	.6 lbs (.28 kg)

Performance

Steady State Speed Band:	± .25% over ambient operating temperature range
Engine Speed MPU Measurement Range:	10 MPU Hertz to 14,000 MPU Hertz
Governing Speed Range with MPU:	500 MPU Hertz to 11,000 MPU Hertz
Engine Speed Ignition Measurement Range:	2 Hertz to 350 Hertz
Governing Speed Range with Ignition:	25 Hertz to 300 Hertz

Katolight Service - Master Repair Manual - Page 2543

User Interface Operation

Keypad

(Not available on DPG-2111-001)

The DPG-21XX-001 provides two buttons for adjusting the engine set speed.

- INC – increases the *selected* Set Speed (A or B)
- DEC – decreases the *selected* Set Speed (A or B)

Gain Potentiometer

The DPG-21XX-001 provides a potentiometer (labeled GAIN) to adjust the Overall Gain at Set Speed A. This is one of the governor's tuning parameters. On the DPG-2111-001, the gain potentiometer adjustment range is +/-20% on the nominal value entered for the Gain at Set Speed A parameter. For all other models, the gain potentiometer adjustment range is 1 to 99.

LED

The LED (Light Emitting Diode) is used as a status indicator. When the LED is off, it indicates that one of the following is true:

- The unit is not being powered.
- The unit is reverse powered (check polarity of supplied power).

If a voltage between 9 Vdc and 30 Vdc is being properly supplied across the BAT+ and BAT- connector pins of the controller and the LED is off, then refer to the troubleshooting chapter.

A slow blinking LED indicates all of the following:

1. The unit is powered.
2. The controller is not seeing a speed signal.

This means the engine is not running. If the engine is running or cranking and the LED is blinking slow, then refer to the troubleshooting chapter for help in diagnosing why the speed signal to the controller is missing.

A fast blinking LED indicates all of the following:

1. The unit is powered.
2. There is an engine speed signal at the controller's tachometer inputs.

When the LED is on and not blinking it indicates the following:

1. The unit is powered.
2. There is a controller fault.

NOTE: The slow blink rate = ½ Hertz (the LED is turned on for 1 second followed by off for 1 second then on again and so on). The fast blink rate is 3 times faster than the slow blink rate.

COMM Port

All governor adjustments require that the controller be connected, via the COMM port, to a computer running the Universal PST application. The Universal PST is an MS Windows based application available from the Software Products page at www.woodward.com/IC/Software. See Chapter 6 for a description of this tool.

Katolight Service - Master Repair Manual - Page 2544

Chapter 3.
Parameter Reference

This chapter provides information regarding each of the parameters that can be adjusted when a computer is connected to the controller via the COMM port. Universal PST (described in the following chapter) is required to make adjustments to the parameters described in this chapter, with the exception of Set Speed A, Set Speed B, and Gain at Set Speed A. It contains 29 subsections. Each subsection provides information about a single parameter.

The following tables list each of the parameters and their default, minimum, and maximum values. Several of the parameters have minimum and maximum values set by other parameters. *Speed* and *Rate* values are shown as Hertz values.

PARAMETER LIST FOR DPG-2101-001 & DPG-2146-001 (IGNITION)
(These controllers use the 7-terminal Euro style screw terminal connector.)

	PARAMETER NAME	DEFAULT	MINIMUM	MAXIMUM
Opt.	1. No. of Flywheel Teeth or (Pulses per revolution)	0	0	572
Req.	**2. Set Speed A**	**1000 (25)**	**Set Speed A Min**	**Set Speed A Max**
	3. Not Available			
Opt.	4. Idle Speed	50 (20)	Idle Speed Min	Idle Speed Max
Req.	**5. Proportional**	**25**	**1**	**99**
Req.	**6. Integral**	**50**	**0**	**99**
Req.	**7. Derivative**	**25**	**0**	**99**
Req.	**8. Gain at Set Speed A**	**Use the controller's built-in GAIN potentiometer**		
	9. Not Available			
Opt.	10. Gain at Idle Speed	20	1	99
Req.	**11. Gain Factor**	**20 (40)**	**1**	**99**
Req.	**12. Speed Filter**	**16 (4)**	**1**	**24**
Opt.	13. Idle Hold Time	0	0	9999
Opt.	14. Accel Rate	1000 (3000)	1	9999
Opt.	15. Decel Rate	1000 (3000)	1	9999
Opt.	16. Startup Rate	1000 (3000)	1	9999
Opt.	17. Integral Low Limit	0	0	Integral High Limit
Opt.	18. Integral High Limit	99	Integral Low Limit	99
Opt.	19. Password	0	0	99
Opt.	20. Overspeed Limit	100	0	100
Opt.	21. Set Speed A Min	10 (2)	10 (2)	Set Speed A
Opt.	22. Set Speed A Max	11000 (300)	Set Speed A	11000 (300)
	23. Not Available			
	24. Not Available			
Opt.	25. Idle Speed Min	10 (2)	10 (2)	Idle Speed
Opt.	26. Idle Speed Max	11000 (300)	Idle Speed	11000 (300)
Opt.	27. Duty Cycle Max	95	10	95
Opt.	28. Startup Speed	1000 (25)	10 (2)	11000 (300)
Opt.	29. Startup Duty Cycle	30	5	95

Katolight Service - Master Repair Manual - Page 2545

Req. = Parameter adjustment required to achieve Basic Governing
Opt. = Parameter use is optional

Default, Minimum and Maximum values in parenthesis apply when the controller uses ignition pulses to sense engine speed, which would be the case for a DPG-2146-001 controller

PARAMETER LIST FOR DPG-2155-001 & DPG-2145-001 (IGNITION)
(These controllers use the 12-terminal quick connect.)

	PARAMETER NAME	DEFAULT	MINIMUM	MAXIMUM
Opt.	1. No. of Flywheel Teeth or (Pulses per Revolution)	0	0	572
Req.	**2. Set Speed A**	**1000 (25)**	**Set Speed A Min**	**Set Speed A Max**
Opt.	3. Set Speed B	1000 (25)	Set Speed B Min	Set Speed B Max
Opt.	4. Idle Speed	50 (20)	Idle Speed Min	Idle Speed Max
Req.	**5. Proportional**	**25**	**1**	**99**
Req.	**6. Integral**	**50**	**0**	**99**
Req.	**7. Derivative**	**25**	**0**	**99**
Req.	**8 GAIN @ Set Speed A**	**Use the controller's built-in GAIN potentiometer**		
Opt.	9. OVG @ Set Speed B	20	1	99
Opt.	10. OVG @ Idle Speed	20	1	99
Req.	**11. Gain Factor**	**20 (40)**	**1**	**99**
Req.	**12. Speed Filter**	**16 (4)**	**1**	**24**
Opt.	13. Idle Hold Time	0	0	9999
Opt.	14. Accel Rate	1000 (3000)	1	9999
Opt.	15. Decel Rate	1000 (3000)	1	9999
Opt.	16. Startup Rate	1000 (3000)	1	9999
Opt.	17. Integral Low Limit	0	0	Integral High Limit
Opt.	18. Integral High Limit	99	Integral Low Limit	99
Opt.	19. Password	0	0	99
Opt.	20. Overspeed Limit	100	0	100
Opt.	21. Set Speed A Min	10 (2)	10 (2)	Set Speed A
Opt.	22. Set Speed A Max	11000 (300)	Set Speed A	11000 (300)
Opt.	23. Set Speed B Min	10 (2)	10 (2)	Set Speed A
Opt.	24. Set Speed B Max	11000 (300)	Set Speed B	11000 (300)
Opt.	25. Idle Speed Min	10 (2)	10 (2)	Idle Speed
Opt.	26. Idle Speed Max	11000 (300)	Idle Speed	11000 (300)
Opt.	27. Duty Cycle Max	95	10	95
Opt.	28. Startup Speed	1000 (25)	10 (2)	11000 (300)
Opt.	29. Startup Duty Cycle	30	5	95

Req. = Parameter adjustment required to achieve Basic Governing
Opt. = Parameter use is optional

Default, Minimum and Maximum values in parenthesis apply when the controller uses ignition pulses to sense engine speed, which would be the case for a DPG-2145-001 controller.

Note: All *Speed* and *Rate* values are shown as Hertz values (parameters 2-4, 14-16, 21-26). Changing the value of parameter 1 will cause different default values to be displayed based on the Hertz to RPM formula.

Katolight Service - Master Repair Manual - Page 2546

PARAMETER LIST FOR DPG-2111-001 (These controllers use the 7-terminal Euro style screw terminal connector.)				
	PARAMETER NAME	**DEFAULT**	**MINIMUM**	**MAXIMUM**
Opt.	1. No. of Flywheel Teeth or (Pulses per Revolution)	0	0	572
Req.	**2. Set Speed A**	**1000**	**Set Speed A Min**	**Set Speed A Max**
Opt.	3. Not Available			
Opt.	4. Idle Speed	50	Idle Speed Min	Idle Speed Max
Req.	**5. Proportional**	**25**	**1**	**99**
Req.	**6. Integral**	**50**	**0**	**99**
Req.	**7. Derivative**	**25**	**0**	**99**
Req.	**8. GAIN @ Set Speed A**	**20**	**1**	**99**
		The controller's built-in GAIN ADJUST potentiometer provides a +/-20% adjustment range of the nominal gain value entered.		
Opt.	9. Not Available			
Opt.	10. OVG @ Idle Speed	20	1	99
Req.	**11. Gain Factor**	**20**	**1**	**99**
Req.	**12. Speed Filter**	**16**	**1**	**24**
Opt.	13. Idle Hold Time	0	0	9999
Opt.	14. Accel Rate	1000	1	9999
Opt.	15. Decel Rate	1000	1	9999
Opt.	16. Startup Rate	1000	1	9999
Opt.	17. Integral Low Limit	0	0	Integral High Limit
Opt.	18. Integral High Limit	99	Integral Low Limit	99
Opt.	19. Password	0	0	99
Opt.	20. Overspeed Limit	100	0	100
Opt.	21. Set Speed A Min	10	10	Set Speed A
Opt.	22. Set Speed A Max	11000	Set Speed A	11000
Opt.	23. Not Available			
Opt.	24. Not Available			
Opt.	25. Idle Speed Min	10	10	Idle Speed
Opt.	26. Idle Speed Max	11000	Idle Speed	11000
Opt.	27. Duty Cycle Max	95	10	95
Opt.	28. Startup Speed	1000	10	11000
Opt.	29. Startup Duty Cycle	30	5	95
Req. = Parameter adjustment required to achieve Basic Governing Opt. = Parameter use is optional				

Note: All *Speed* and *Rate* values are shown as Hertz values (parameters 2, 4, 14-16, 21-22, 25-26). Changing the value of parameter 1 will cause different default values to be displayed based on the Hertz to RPM formula.

Katolight Service - Master Repair Manual - Page 2547

3.1 No. of Flywheel Teeth or Pulses per Revolution (optional)

This parameter provides the conversion factor needed to display speeds as RPM values instead of Hertz values. Adjusting this parameter is optional. The default value of 0 disables Hertz (Hz) to RPM conversions so all set speeds are displayed in Hertz. Setting this parameter to a value other than zero enables Hertz to RPM conversion.

Adjust this parameter to a value equal to the exact number of pulses seen by the governor in one revolution of the engine to display set speeds in RPM. The formula used to convert the speed signal from a Hertz value to a RPM value is:

$$\frac{[(Hertz)\times(60s)]}{[Pulses\_per\_rev]} = [EngineRPM]$$

For example:

$$\frac{[(3960Hz)\times(60s)]}{[132Pulse\_per\_rev]} = [1800RPM]$$

The following derivation of the above formula can be used to convert from RPM to Hertz.

$$\frac{[(EngineRPM)\times(Pulses\_per\_rev)]}{[60s]} = [Hertz]$$

DPG-2101-001, DPG-2111-001 and DPG-2155-001 Controllers
To use this parameter correctly on governors sensing engine speed with a magnetic pickup, you must know the exact number of flywheel teeth that pass by the magnetic pickup in one revolution of the engine.

DPG-2145-001 and DPG-2146-001 Controllers
To use this parameter correctly on governors sensing engine speed via ignition pulses, you must know the exact number of ignition pulses that occur in one revolution of the engine.

3.2 Set Speed A (required)

This parameter is adjustable both from the controller's DEC and INC keys and by using the Universal PST application. However, when the value is changed using the controller's keypad, the value displayed by the Universal PST does not automatically update. To refresh the value displayed on the PC the user must select a different parameter with the mouse pointer then reselect the value of Set Speed A. The Universal PST application also provides a [Read All] button that can be used to perform a complete refresh of all parameter values.

Katolight Service - Master Repair Manual - Page 2548

SET SPEED A is the governor's target speed after startup when Set Speed B is not selected. The startup sequence is complete when the target speed and the engine speed reach the set speed.

NOTE: If parameter 1 is used, then the Universal PST will display speeds and ramp rates as RPM values instead of Hertz values.

On DPG-2145-001 and DPG-2155-001 units, when a two-position switch is connected between SET SPD 1 (pin 12) and SET SPD 2 (pin 6) then an open switch selects SET SPEED A as the governor's target speed. If the governor's SET SPD inputs are not used then SET SPEED A is automatically the active target speed after the startup sequence is completed. See the Installation Instructions chapter for details about wiring in a switch to use the speed select feature available on DPG-2145-001 and DPG-2155-001 model controllers.

3.3 Set Speed B (optional)

SET SPEED B becomes the governor's target speed on DPG-2145-001 and DPG-2155-001 units, when SET SPD 1 (pin 12) and SET SPD 2 (pin 6) of the connector are tied together. In other words, when a two-position switch is connected between SET SPD 1 (pin 12) and SET SPD 2 (pin 6) then a closed switch selects SET SPEED B as the governor's target speed.

See the Installation Instructions chapter for details about wiring in a switch to use the speed select feature available on DPG-2145-001 and DPG-2155-001 model controllers.

3.4 Idle Speed (optional)

The IDLE SPEED is the governor's target speed for the IDLE HOLD TIME (parameter 13) when the engine is started. When the idle hold timer reaches zero, the target speed will be become either SET SPEED A or SET SPEED B depending on the state of the SPEED SEL input terminal.

3.5 Proportional (required)

The proportional term is one of the interrelated PID terms that determine how well a DPG controller governs the engine's speed. A speed change creates a speed error (the difference between the target speed and the actual speed.) The proportional gain controls the size of the governor output response to a step change in the speed error.

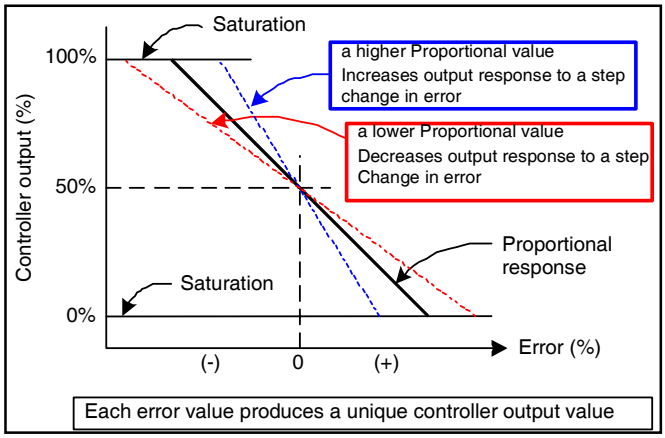

Katolight Service - Master Repair Manual - Page 2549

3.6 Integral (required)

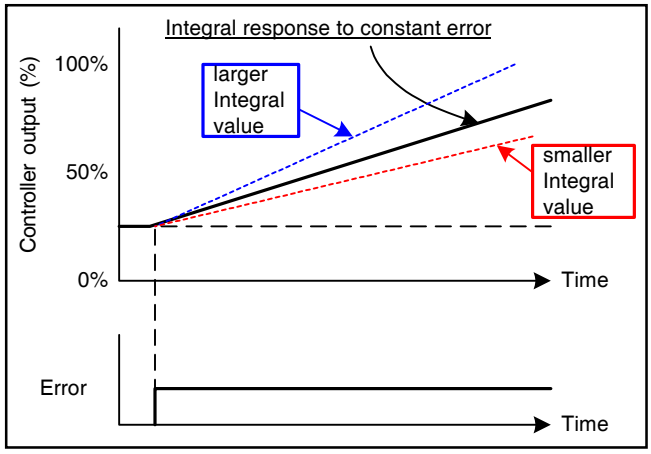

The integral term is one of the interrelated PID terms that determine how well a DPG controller governs the engine's speed. The integral term acts to drive speed error to zero. In a proportional-only control with constant load, there will be a constant speed error that inversely relates to the proportional gain of the system. The integral term is key to isochronous speed control. This term eliminates the difference between the programmed set speed and the actual speed. The integral gain changes the time it takes to drive the error to zero.

Note: Integral is needed to eliminate speed offsets due to proportional gain and should never be left at zero.

3.7 Derivative (required)

The derivative term is one of the interrelated PID terms that determine how well a DPG controller governs the engine's speed. The derivative responds to the rate of change in the speed error. This parameter is primarily used to dampen very rapid oscillations resulting from large speed changes. The derivative responds to engine acceleration or deceleration. If the engine speed approaches the target speed at a fast rate, the derivative acts to minimize or eliminate overshoot. A zero value is allowed but systems typically require some derivative gain to improve overall engine speed control.

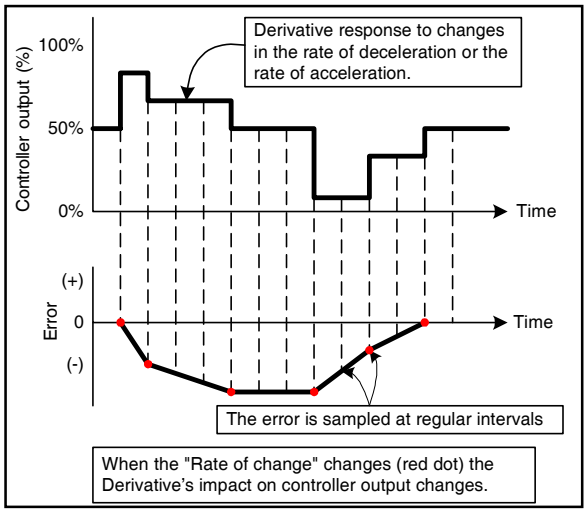

3.8 Gain at Set Speed A (required)

This gain acts as the multiplier on the three PID terms (proportional, integral, derivative) when Set Speed A is selected as the active target speed. For all models except DPG-2111-001, the controller's built-in gain potentiometer is adjustable from 1 to 99.

On DPG-2111-001, the controller's built-in gain potentiometers adjustable range is +/-20% of the nominal gain value entered for the Overall Gain at Set Speed A parameter. Universal PST is required to modify the nominal value of the Overall Gain at Set Speed A parameter.

Katolight Service - Master Repair Manual - Page 2550

For example, the Overall Gain at Set Speed A has a value of 35. The following equations determine the gain potentiometer range of adjustment.

(Overall Gain at Set Speed A) - [(Overall Gain at Set Speed A) * (0.20)] = Min Gain Pot Setting

(35) - [(35) * (0.20)] = 28

(Overall Gain at Set Speed A) + [(Overall Gain at Set Speed A) * (0.20)] = Max Gain Pot Setting

(35) + [(35) * (0.20)] = 42

3.9 Overall Gain at Set Speed B (optional)

(Available only on DPG-2145-001 & DPG-2155-001)

This gain acts as the multiplier on the three PID terms (proportional, integral, derivative) when Set Speed B is selected as the active target speed. This gain term is adjustable from 01 to 99.

3.10 Overall Gain at Idle Speed (optional)

This gain acts as the multiplier on the three PID terms (proportional, integral, derivative) when the Idle Speed is the active target speed. The idle speed set point is active only during startup when the idle hold timer is running. This gain term is adjustable from 01 to 99.

3.11 Gain Factor (required)

The gain factor parameter is used to obtain more range of adjustment from the PID terms. In other words, if any of the PID terms or the Gain terms reaches their adjustment limits then this value can be modified to provide for more range of adjustment in the PID and Gain terms.

For example, if the PID terms are set to 90, 80, and 50 respectively and the Gain Factor is set to 20, then doubling the Gain Factor by setting it to 40 allows the PID terms to be halved to 45, 40, and 25 respectively. These new settings are equivalent to the previous settings with respect to the governor's tuning response and now allow the PID terms to be adjusted higher if needed.

3.12 Speed Filter (required)

This parameter indicates the number of speed signal pulses to use when computing an average engine speed and is used to dampen out speed measurement variations that can make PID tuning difficult. But, keep in mind the following:

- Too much filtering will slow down the governor's response to speed changes.
- Too little filtering can make the governor overly sensitive and tuning difficult.

There is measurable acceleration and deceleration that occurs between cylinder firings. As a general rule, less filtering is required the more engine cylinders there are. This is because the number of acceleration-deceleration cycles increases and these oscillations will have lower amplitude. With more cylinders, there is less time for the speed to slow down before the next cylinder firing.

Katolight Service - Master Repair Manual - Page 2551

Rotational mass also affects the amount of speed signal filtering needed. The more rotational mass, the less filtering is needed. The less rotational mass, the more filtering is needed.

For installations using a magnetic pickup to sense engine speed
Typically, the value 24 works well on small 3- or 4-cylinder engines. A value of 16 is recommended for 6- or 8-cylinder engines. The following formula can also be used to derive a good starting point for the speed filter value for a given engine application. Round the result to the nearest integer. The maximum value allowed is 24.

[(#_of_flywheel_teeth) / (#_of_engine_cylinders)] * 0.75 = speed_filter_value

For installations using ignition pulses to sense engine speed
It is recommended that the Speed Filter be at least equal to the number of ignition pulses per one revolution of the engine. A good starting point would be 2 times the number of ignition pulses per one revolution of the engine.

[(pulses_per_rev) * (2)] = speed_filter_value

3.13 Idle Hold Time (optional)

The idle hold time specifies how long, after starting, the engine is to stay at the idle speed before finishing the ramp to the target speed. The time value has a resolution of one-tenth of a second.

3.14 Accel Rate (optional)

This rate specifies how fast the governor should increase the engine's speed when a new higher target speed is made active. The parameter value is specified in Hertz per second based on the following formula.

[(higher_speed_in_Hertz) – (lower_speed_in_Hertz)] / (ramp_time_in_seconds) = accel_rate_value

For example, suppose Set Speed A is 3300 Hertz and Set Speed B is at 3960 Hertz. The governor is currently controlling the engine at 3300 Hertz (Set Speed A), when Set Speed B becomes the active target speed. It is desired that the new speed of 3960 be reached in precisely 2 seconds. The following formula determines the value needed by Accel Rate to increase the engine speed from Set Speed A to Set Speed B in 2 seconds.

[(Set Speed B) – (Set Speed A)] / (N seconds) = accel_rate_value in Hertz per sec.

[3960 – 3300] / 2 = 330 Hertz per second

3.15 Decel Rate (optional)

The Decel Rate specifies how fast the governor should decrease the engine's speed when a new lower target speed is made active. The parameter value is specified in Hertz per second based on the following formula.

[(higher_speed_in_Hertz) – (lower_speed_in_Hertz)] / (ramp_time_in_seconds) = decel_rate_value

Katolight Service - Master Repair Manual - Page 2552

For example, suppose Set Speed A is 4170 Hertz and Set Speed B is 3475 Hertz. The governor is currently controlling the engine at 4170 Hertz (Set Speed A), when Set Speed B becomes the active target speed. It is desired that the new speed of 3475 be reached in precisely 1.5 seconds. The following formula determines the value needed by Decel Rate to decrease the engine speed from Set Speed A Set Speed B in 1.5 seconds.

[(Set Speed A) – (Set Speed B)] / (N seconds) = decel_rate_value in Hertz per sec.

[4170 – 3475] / 1.5 = 463 Hertz per second

3.16 Startup Rate (optional)

This parameter is used to achieve a smooth controlled engine start. On diesel engines, this feature is also useful for minimizing exhaust smoke at startup. When used in combination with the Idle Speed and Idle Hold Time, a brief warm-up cycle can be programmed.

The startup rate specifies how fast the governor should increase the engine speed when the engine is started. The rate value indicates Hertz per second. The formula to use for determining a precise Startup Rate is shown below.

[(final_target_speed_in_Hertz) – (crank_speed_in_Hertz)] /
(ramp_time_in_seconds) = startup_rate_value

The ramp up will pause at the STARTUP SPEED until the governor senses an MPU signal greater than the STARTUP SPEED. This prevents the startup ramp from reaching completion before the engine has even started. The governor considers MPU frequencies below the STARTUP SPEED as indicating that the engine is cranking but has not yet started. MPU frequencies above the STARTUP SPEED are taken to indicate that the engine has started and the governor will increase the engine speed until the selected set speed is reached.

Exception: In cases where the target speed is less the STARTUP SPEED, the startup ramp sequence ends when the target speed is reached.

NOTE:
When the No. of FLYWHEEL TEETH parameter is used, the ACCEL RATE, DECEL RATE, and STARTUP RATE parameters are displayed as a RPM quantity per second instead of Hz/sec values. The given rate formulas can be used to compute rates in terms of RPM values by substituting the Hertz speed values with RPM speed values.

3.17 Integral Low Limit (optional)

The integral low limit prevents "integral windup" in the negative direction. In other words, the integral low limit parameter is used to reduce underspeed duration after a long or sustained overspeed condition was present. The low limit helps reduce the duration and amount of engine underspeed by maintaining a minimum actuator position.

When smaller pulse width modulated (PWM) duty cycle values do not reduce the engine speed any further but an off speed (measured speed greater than the target speed) remains, letting the Integral term grow more negative is not beneficial. Unused negative integration would cause a slower recovery from an underspeed condition.

Katolight Service - Master Repair Manual - Page 2553

The integral low limit specifies the PWM duty cycle where the integrator's influence on lowering PID output must stop. The default value is 0%. The value can be adjusted from 0% to 90% in 1% increments.

CAUTION: Use carefully as improper use can prevent the governor from ever reaching the target speed. The first line of defense in reducing overspeed or underspeed errors is a well-tuned governor via the PID terms.

3.18 Integral High Limit (optional)

The integral high limit prevents "integral windup" in the positive direction. In other words, the integral high limit parameter is used to reduce overspeed duration after a long or sustained underspeed condition was present. The high limit helps reduce the duration and amount of engine overspeed by maintaining a maximum actuator position.

When larger PWM duty cycle values do not increase the engine speed any further but a negative off speed (measured speed less than the target speed) remains, letting the Integral term grow more positive is not beneficial. Unused positive integration would cause a slower recovery from an overspeed condition.

If an engine overload situation causes the engine speed to remain below the target speed for some period of time, then the integral portion of PID output would grow larger than otherwise needed (would windup). Therefore, when the load is removed the engine may overspeed because it takes time for the integral portion of PID output to shrink or "unwind". This is where reducing the Integral Limit High value can help by preventing excessive windup in the PID output's integration term.

The integral high limit specifies the PWM duty cycle where the integrator's influence on raising PID output must stop. The default value is 99%. The value can be adjusted from 99% down to 10% in 1% increments.

CAUTION: Use carefully as improper use can prevent the governor from ever reaching the target speed. The first line of defense in reducing overspeed or underspeed errors is a well-tuned governor via the PID terms.

3.19 Password (optional)

The password protect parameter is provided to protect against inadvertent parameter changes that may occur whenever the keys are pressed and a parameter modification is not intended. The password protect parameter has three possible settings: DISABLED, LOCKED, and UNLOCKED

DISABLED – This setting turns off any password protection. Use this setting if password protection is not desired. This is the default setting as shipped from the factory. Entering a value of [99] sets the password protect parameter to the disabled mode. When the password protect parameter is selected, the LED display will show [Pd] for 2 seconds indicating the password disabled mode, then the value [00.] is displayed. The user can then edit the value.

LOCKED – This setting means that password protection is active and only parameter viewing is allowed (parameter editing is disabled). Enter a value of [22] to set password protect to locked mode. For 2 seconds after selecting the password protect parameter the LED display will show [PE.] for this mode and the

Katolight Service - Master Repair Manual - Page 2554

rightmost decimal point will be ON (no blinking), then the value [00.] is displayed. The user can then edit the value.

UNLOCKED – This setting means that password protection is active but parameter editing is allowed. Entering a value of [30] while in LOCKED mode will UNLOCK parameter editing. The user is free to edit parameters. If there is no keypad activity for 5 minutes, the controller returns to LOCKED mode. If not already in the UNLOCKED mode, the user must get into the UNLOCKED mode in order to enter a 99 to disable password protection.

3.20 Overspeed Limit (optional)

This parameter is used to determine the engine speed that will trigger the governor to output minimum fuel. The parameter's value is in terms of a percentage over the highest set speed. In other words, an overspeed condition is detected if the engine speed reaches a speed of [OVERSPEED LIMIT %] greater than the highest set speed.

For example: If the highest set speed is 1800 RPM and this parameter is set to 20, then an overspeed condition will be detected at 2160 RPM (the value that is 20% greater than 1800). Formula: 1.20 * 1800 RPM = 2160 RPM

The default value of 100 is used to disable overspeed detection. Use values less than 100 to enable the overspeed limit function and set the limit speed to [(1 + (overspeed_limit_value/100)) * (highest_set_speed)].

NOTE: The governor must be turned off to clear the overspeed detection before the engine can be restarted.

NOTE:
When the No. of FLYWHEEL TEETH parameter is used, the SET SPEED A MIN, SET SPEED A MAX, SET SPEED B MIN, SET SPEED B MAX, IDLE SPEED MIN, and IDLE SPEED MAX parameters are displayed as RPM values instead of Hertz values.

3.21 Set Speed A Min (optional)

Set Speed A Min is used to set the lowest value allowed for adjustments of Set Speed A. This parameter can be set to any value within the range bordered by 10 Hertz (2 Hertz ignition) and the current value of the Set Speed A parameter.

3.22 Set Speed A Max (optional)

Set Speed A Max is used to set the highest value allowed for adjustments of Set Speed A. This parameter can be set to any value within the range bordered by current Set Speed A setting and 11,000 Hertz (300 Hertz ignition).

3.23 Set Speed B Min (optional)

(Available only on DPG-2145-001 & DPG 2155-001)

Set Speed B Min is used to set the lowest value allowed for adjustments of Set Speed B. This parameter can be set to any value within the range of 10 Hertz (2 Hertz ignition) and the current value of Set Speed B.

Katolight Service - Master Repair Manual - Page 2555

3.24 Set Speed B Max (optional)

(Available only on DPG-2145-001 & DPG 2155-001)

Set Speed B Max is used to set the highest value allowed for adjustments of Set Speed B. This parameter can be set to any value within the range bordered by current Set Speed B and 11,000 Hertz (300 Hertz ignition).

3.25 Idle Speed Min (optional)

Idle Speed Min is used to set the lowest value allowed for adjustments of Idle Speed. This parameter can be set to any value within the range of 10 Hertz (2 Hertz ignition) and the current value of Idle Speed.

3.26 Idle Speed Max (optional)

Idle Speed Max is used to set the highest value allowed for adjustments of Idle Speed. This parameter can be set to any value within the range bordered by current Idle Speed and 11,000 Hertz (300 Hertz ignition).

3.27 Duty Cycle Limit (optional)

The Duty Cycle Maximum parameter sets the absolute maximum amount of drive signal that can be output to the actuator and thus serves as a mechanism for fuel limiting. Fuel limiting is achieved by setting the maximum duty cycle or on-time allowed during one cycle of the PWM (pulse-width-modulation) signal controlling the actuator drive circuit. The value assigned to the duty cycle limit parameter is a percentage, and is limited to values in the range 10% to 95%. The default value is 95%.

3.28 Startup Speed (optional)

The Startup Speed parameter should be set to an engine speed at least 10% higher than the fastest engine cranking speed but lower than the engine's idle speed. This allows the governor to determine whether the engine is cranking or running whenever an engine speed signal is present.

If the Startup Speed value is set too low (less than crank speed) the governor's target speed will be ramped to the active set speed (Idle, Set Speed A, or Set Speed B) before the engine has started. Therefore, when the engine does start, it may overspeed or output excessive smoke because the startup ramp, having already completed, no longer controls the rate of engine speed increase.

If the Startup Speed value is set too high (above the active set speed) then the Startup Speed becomes the target speed that the governor must reach before the governor considers the startup sequence complete. Typically, the startup sequence ends when the engine speed reaches the active set speed. The active set speed is the Idle Speed if the Idle Hold Time parameter is a nonzero value or the "selected set speed" (either Set Speed A or Set Speed B).

To determine the proper value for this parameter the crank speed must be known. There are two ways to determine the engine crank speed.

1) Use a meter to measure the frequency across the MPU+ and MPU- terminals of the governor during cranking or . . .
2) Use a PC running the Universal PST application and read the value of the Measured Speed in the View Status panel when the engine is cranking. Note: From the Universal PST startup

Katolight Service - Master Repair Manual - Page 2556

screen press the View Status button, then press the Start Monitoring button to begin reading values.

3.29 Startup Duty Cycle (optional)

The Startup Duty Cycle parameter is used to pre-load the PID output with a PWM duty cycle value close to that needed for the actuator to allow enough fuel to idle the engine.

If the value is too low, then the engine crank time may be longer than desired because the governor's actuator output starts from a value much smaller than needed to begin opening the fuel valve.

If the value is too high, then the engine may overspeed because the actuator opens more than needed to start the engine.

There are two ways to determine a good value to use for this parameter.

1) Use a meter to measure the duty cycle across the ACT terminals of the governor while the engine is running. Note: To determine if your meter is reading the correct value:
    a. First, apply power to the governor but do NOT start the engine
    b. Second, measure the duty cycle across the ACT terminals (No. 3 and No. 4). The reading should be 5 for 5%. If the reading is 95, then reverse the leads.
2) Use a PC running the Universal PST application and read the value of the PWM command in the View Status panel when the engine is cranking. Note: from the Universal PST startup screen press the View Status button, then press the Start Monitoring button to begin reading values.

Katolight Service - Master Repair Manual - Page 2557

Chapter 4.
Universal PST

Introduction

This chapter provides the information needed to use a computer with your governor. Here you will find instructions for wiring the governor's COMM port to a computer's serial port and instructions for acquiring, installing, and running the Universal Parameter Setup Tool (Universal PST).

The Universal PST is a Microsoft® Windows® application available from Woodward that enables you to adjust parameter settings and monitor governor operation.

The Universal PST also includes a graphical chart recorder that displays engine speed in real-time. This provides a visual representation of the governor's response to changes in speed or load, which can be very helpful in achieving precise tuning.

Features

Universal PST features include:

- Automatic configuration to each DPG when communications established
- Read/write access to all of a DPG's programmable parameters and features
- Display of each parameter's default, minimum, and maximum values
- Diagnostics utilizing automatic refresh of DPG status
- Saving and reloading DPG setup information to and from a file for reuse
- Single button read to get the current values of all parameters
- Single button write to program a DPG with previously saved setup values
- Engine speed monitoring via a chart recorder to aid in tuning the governor
- Saving chart recorder data to a Microsoft Excel compatible file
- Help information on each of the governor's parameters
- Help information on using the Universal PST

Universal PST Requirements

The program requires an Intel Pentium class machine running Microsoft® Windows® 98se (Second Edition), NT4, 2000, or XP. The display resolution needs to be set to SVGA (800x600) or higher.

Katolight Service - Master Repair Manual - Page 2558

Acquiring Universal PST

The Universal PST application is available from our website. If you have an Internet connection you can download a copy from www.woodward.com/IC/Software.

What to download: The files *ReadMeFirst.txt*, *Universal_PST.zip*, and *Universal_PST_mdb_Update.zip* are available for download on the Software Products page at the www.woodward.com/IC/Software website.

Requesting the Universal PST on CD-ROM: If you do not have an Internet connection, or have problems downloading the large zip file, contact the Woodward sales department to request a CD-ROM copy of Universal PST for a nominal charge. Telephone: (847) 967-7730.

Installing Universal PST

The installation procedures are slightly different depending on whether you downloaded the zip file or have the CD-ROM version. The instructions provided here assume you know how to user your computer.

The ReadMeFirst.txt file provides instructions regarding application installation using the downloaded zip file. Basically, the program installation files must first be extracted from the zip file into a temporary folder on your computer's hard drive. Then you run the setup.exe program and follow the instructions the setup program gives you.

NOTE: the zip file format is WinZip® compatible. The WinZip® application is not provided. If you are running Microsoft Windows XP, it has built-in resources to extract the files from Universal_PST.zip. Refer to your computer's documentation or online help files for instructions regarding creating folders, installing, and running applications.

Wiring the COMM Port to a PC

RJ11 OR RJ12 POSITION	DPG-21XX SIGNAL	CONNECTS TO:
1	No connection	N/C
2	Transmit data to PC	PC receive (RxD) DB9 pin 2
3	Receive data from PC	PC transmit (TxD) DB9 pin 3
4	COMMON	PC common DB9 pin 5
5	+5 Vdc (Do NOT connect at the PC end)	N/C
6	No connection	N/C

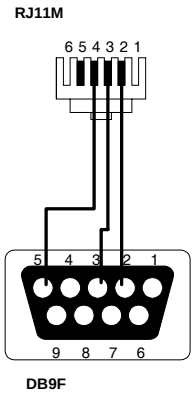

Katolight Service - Master Repair Manual - Page 2559

Universal PST User Interface Overview

Universal PST for DPG has two main display modes.

- Table View
- Chart View

NOTE: The program starts in Table View

Table View

In Table View the user can:

- View the current values for all user programmable parameters in the Parameter Setup panel's table.
- Edit a parameter's value by double-clicking on a cell in the "Value" column of the table.
- Press the <Read All> button to refresh the values in table shown on the Parameter Setup panel.
- Press the <Write All> button to transmit setup values to the governor.
- Press the <View Status> button to display read only parameters in the Status View panel.
- Press the <View Chart> button to set the display mode to Chart View.
- Select items from the menu.

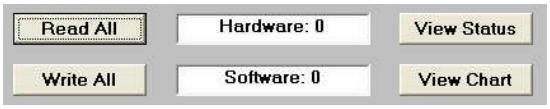

Chart View

In Chart View the user can:

- View the current values for all user programmable parameters in the Parameter Setup panel's table.
- Edit parameter values related to governor tuning. These same parameters are also on the main parameter setup table.
- Press the <Data File => button to open a file for saving chart recorder data.
- Press the <Data Reset> button to start data collection to the open file at the beginning.
- Press the <Pause Chart> button to stop the chart recorder, which also stops writing data to the file. Press the <Continue> button to turn the chart recorder back on.
- Adjust the horizontal and vertical scale settings of the chart recorder.
- Press the <View Table> button to set the display mode back to Table View.
- Select items from the menu.

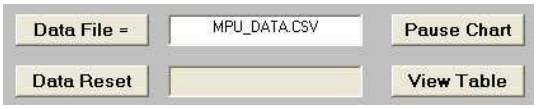

Katolight Service - Master Repair Manual - Page 2560

NOTE: Pressing a button means positioning the mouse pointer over the button and clicking the left mouse button. Parameter EDITING requires positioning the mouse pointer over a parameter's "Value" and double-clicking the left mouse button to highlight the particular value.

Universal PST for DPG Menu Items

Use the File menu to:

- Open a previously saved setup data file
- Save setup data to a file
- Exit the program

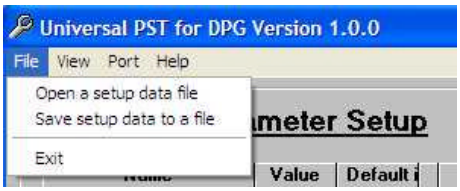

Use the View menu to:

- Select Parameter Table view (Table View)
- Select Chart Recorder view (Chart View)



Use the Port menu to:

- Select the PC's serial port that is connected to the DPG-2000

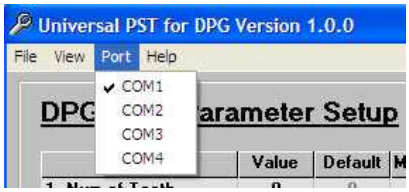

Use the Help menu to access:

- Help on the Universal PST for DPG
- Help on the DPG-2000 product that is currently in communication with the PC
- Information about the Universal PST for DPG application

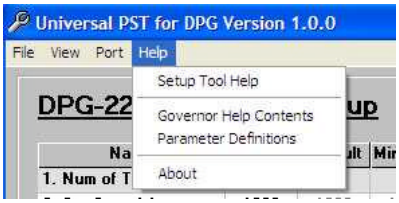

Parameter Setup

The Parameter Setup panel displays a table where each row shows the Name of a user programmable parameter, its current Value, and the parameter's Default, Minimum, and Maximum values.

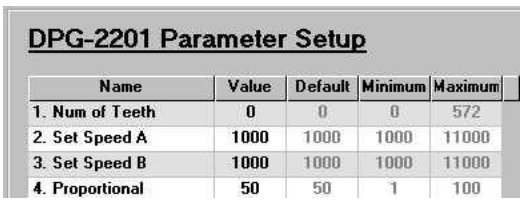

DPG-2201 Parameter Setup

Name	Value	Default	Minimum	Maximum
1. Num of Teeth	0	0	0	572
2. Set Speed A	1000	1000	1000	11000
3. Set Speed B	1000	1000	1000	11000
4. Proportional	50	50	1	100

To modify a parameter's current value, it must first be selected.

Katolight Service - Master Repair Manual - Page 2561

Do this by double-clicking the left mouse button on a cell in the table that is at the intersection of the parameter's row and the Value column. The selected cell will be highlighted and the value can now be modified. When done modifying the value, press the computer keyboard's <Enter> key to transmit the new value to the governor.

NOTE: Pressing a button means positioning the mouse pointer over the button and clicking the left mouse button. Parameter EDITING requires positioning the mouse pointer over a parameter's "Value" and double-clicking the left mouse button to highlight the particular value.

To get help on a particular parameter, single click the left mouse button on a parameter's Value, then press <Ctrl><F1> on the computer's keyboard. <Ctrl><F1> means press and hold the <Ctrl> key while the <F1> key is pressed and released.

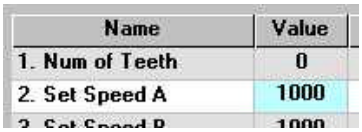

To get the current values for all of a DPG-2XXX's parameters, press the <Read All> button.

Use the <Write All> button to transmit all parameter values to the governor automatically.

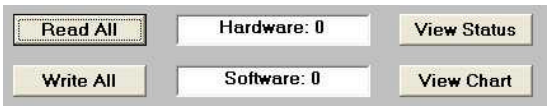

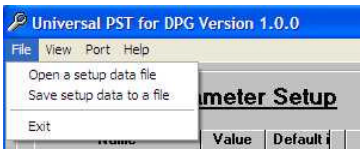

The <Write All> button is very useful when reusing saved setup data to configure a new system the same as a previous one. Simply load an existing set of previously saved parameter values into the Parameter Setup table using *Open a setup data file* from the *File* menu then press the <Write All> button.

Status View

The Status View panel is displayed only after pressing the <View Status> button. The Status View panel is part of the Table View display mode.

The Status View panel displays a table where each row shows the Name of a read only parameter and its current Value (when "Auto Read is ON")

Press (left mouse click) the <START Monitoring> button to have the Universal PST program automatically refresh the Values. Press the <STOP Monitoring> button to disable automatic refresh.

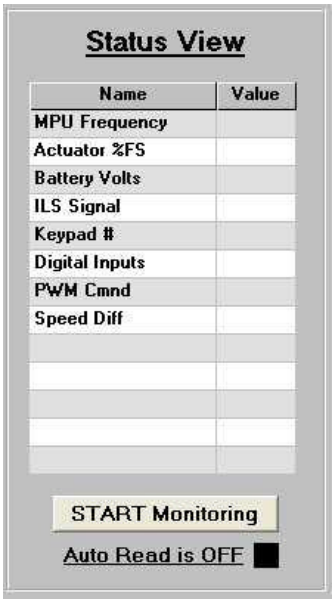

Katolight Service - Master Repair Manual - Page 2562

Tuning View

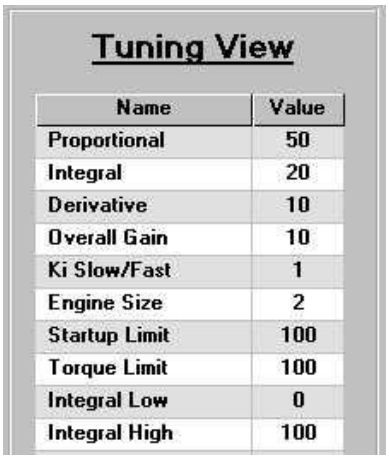

The Tuning View panel is displayed only after pressing the <View Chart> button. The Tuning View panel is part of the Chart View display mode.

To modify a tuning parameter's current value, it must first be selected. Do this by double-clicking the left mouse button on a cell in the table that is at the intersection of the parameter's row and the Value column.

The selected cell will be highlighted and the value can now be modified. When done modifying the value, press the computer keyboard's <Enter> key to transmit the new value to the governor.

Chart Recorder

The chart recorder is part of the Chart View display mode. Each time Chart View is entered the last used Data File is reset, the Vertical Scale defaults to [0 Hz to 12000 Hz], and the Horizontal scale defaults to 20 seconds.

The Vertical Scale options and the Horizontal Scale options control the chart recorder's display characteristics.



On the Vertical Scale, use the [+/- 10% of ____ Hz] option to zoom in on the current Hertz Average.

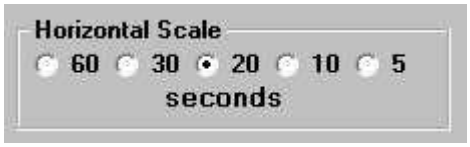

Use the Horizontal Scale to have the chart recorder display 60, 30, 20, 10, or 5 seconds of collected engine speed data. Larger values compress the display while smaller numbers expand the display. A Horizontal Scale setting of 20 seconds is approximately the same as a 5 millimeter per second paper travel speed of a conventional paper tape chart recorder.

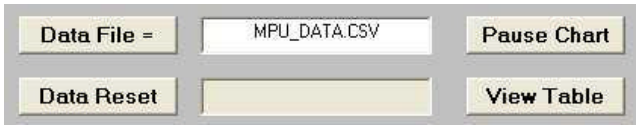

The <Data File => button opens a dialog box to name the file and path where chart recorder data will get saved.

Katolight Service - Master Repair Manual - Page 2563

The <Data Reset> button is used to start data collection over using the current Data File. The progress bar shown to the right of this button indicates how full the Data File is. Each data file can hold approximately 10 minutes of data. The progress bar will display the message “The Data File is FULL” when no longer accepting chart recorder data.

The <Pause Chart> button stops chart recorder and Data File updates. Press this button, which is now named <Continue> to turns the chart recorder back on.

Use the <View Table> button to return to the Table View display mode. Be sure to open a new Data File before returning to Table View if the data already collected needs to be saved. The active Data File is automatically reset each time Chart View display mode becomes active.

Katolight Service - Master Repair Manual - Page 2564

Chapter 5
Calibration Instructions

Basic Adjustments

The controller is programmed at the factory with default parameter settings. These settings allow the controller to operate but usually require some further adjustments to obtain the best system performance. In order to bring the engine up to a single speed for the first time, the installer will need to adjust the parameters shown in the table.

The parameters listed are the primary ones to modify to get the governor tuned and the engine running smoothly. It is recommended that you work with them first and leave all the other parameters at their default values until you are satisfied with the basic engine tuning.

No.	Parameter Name	Default Value
2	SET SPEED A	1000
5	PROPORTIONAL	25
6	INTEGRAL	50
7	DERIVATIVE	25
8	OVG @ SET SPEED A	20
11	GAIN FACTOR (note 1)	20 or 40
12	SPEED FILTER (note 2)	16 or 4

NOTE 1: Modify Gain Factor only if you run out of adjustment in a PID or OVG term.

NOTE 2: For the Speed Filter, typically the value 24 works well on small 3- or 4-cylinder engines. A value of 16 is recommended for 6- or 8-cylinder engines.

Tuning Methodology

Once the engine is running, the following procedure may be used to discover more optimum values for PID and the overall gain parameters (OVG). The goal would be to find PID values that allow the controller to govern the engine well at a variety of different speeds and loads while only requiring gain adjustment at those different speeds.

Follow these steps:

1. Set the integral and derivative terms to 0.
2. Set the overall gain low (<20).
3. Increase the proportional term until you get continuous oscillations greater than 2 Hz.
4. Reduce the proportional term by 25% to 50%.
5. Now experiment with small value changes in the derivative to dampen out “ringing” in response to load transients.
6. Add some integral to eliminate any steady-state error in the engine’s speed and help decrease error recovery time.

Katolight Service - Master Repair Manual - Page 2565

7. The overall gain can be increased to improve response time while keeping the ratios of the PID terms relative to each other constant.

During each of the steps 3 through 6, you need to disturb the system by adding and removing a load from the engine to check the governor's response to the load transition. **START WITH SMALL LOADS.**

Note that without integral, a speed error may persist after a load-on load-off transition. Therefore, during steps 3-5 you should temporarily increase the integral to get the engine speed back to the set speed, and then reset the integral to a lower value again while working to find good proportional and derivative values. Repeat steps 3-7 as needed to find a Proportional value, Integral value, and a Derivative value that work well with a variety of overall gain values and different load transients.

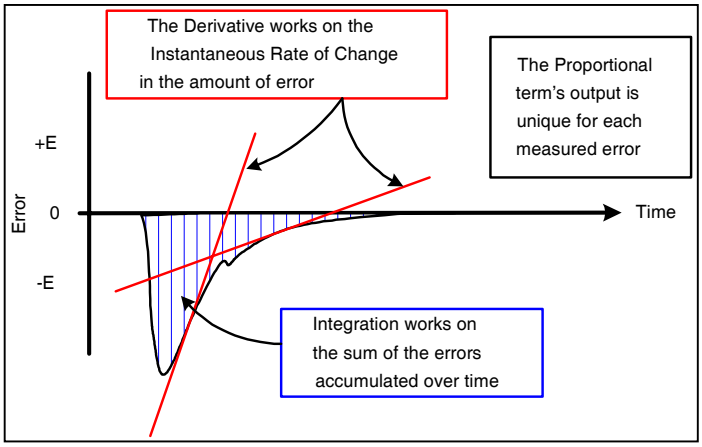

Katolight Service - Master Repair Manual - Page 2566

Chapter 6.
Installation Instructions

Recommended Mounting

The governor controller is designed to be panel mounted. The mounting should protect the controller from exposure to rain, weather, and direct sunlight. The controller should not be mounted on the engine or in an environment that exceeds the mechanical specifications outlined in Chapter 1 of this manual. The controller should be mounted in a position to allow access to the user interface, the COMM port and the terminal strip.

DPG-2101-001

Terminal Descriptions

NO.	NAME	FUNCTION
1	BAT+	Battery positive (Supply voltage range is 9 Vdc–30 Vdc)
2	BAT-	Battery negative
3	ACT	Actuator drive output
4	ACT	Actuator drive return
5	MPU+	Magnetic pickup signal input
6	MPU-	Magnetic pickup ground
7	SHIELD	Ground connection for cable shielding

Wiring Diagram

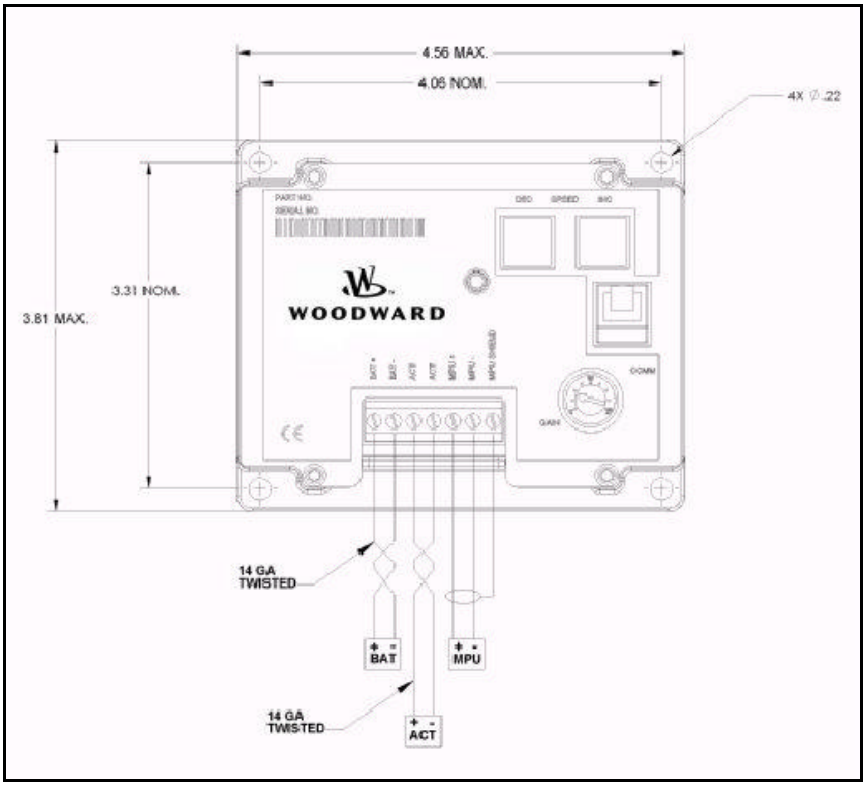

Katolight Service - Master Repair Manual - Page 2567

DPG-2111-001

Terminal Descriptions

NO.	NAME	FUNCTION
1	BAT+	Battery positive (Supply voltage range is 9 Vdc–30 Vdc)
2	BAT-	Battery negative
3	ACT	Actuator drive output
4	ACT	Actuator drive return
5	MPU+	Magnetic pickup signal input
6	MPU-	Magnetic pickup ground
7	SHIELD	Ground connection for cable shielding

Wiring Diagram

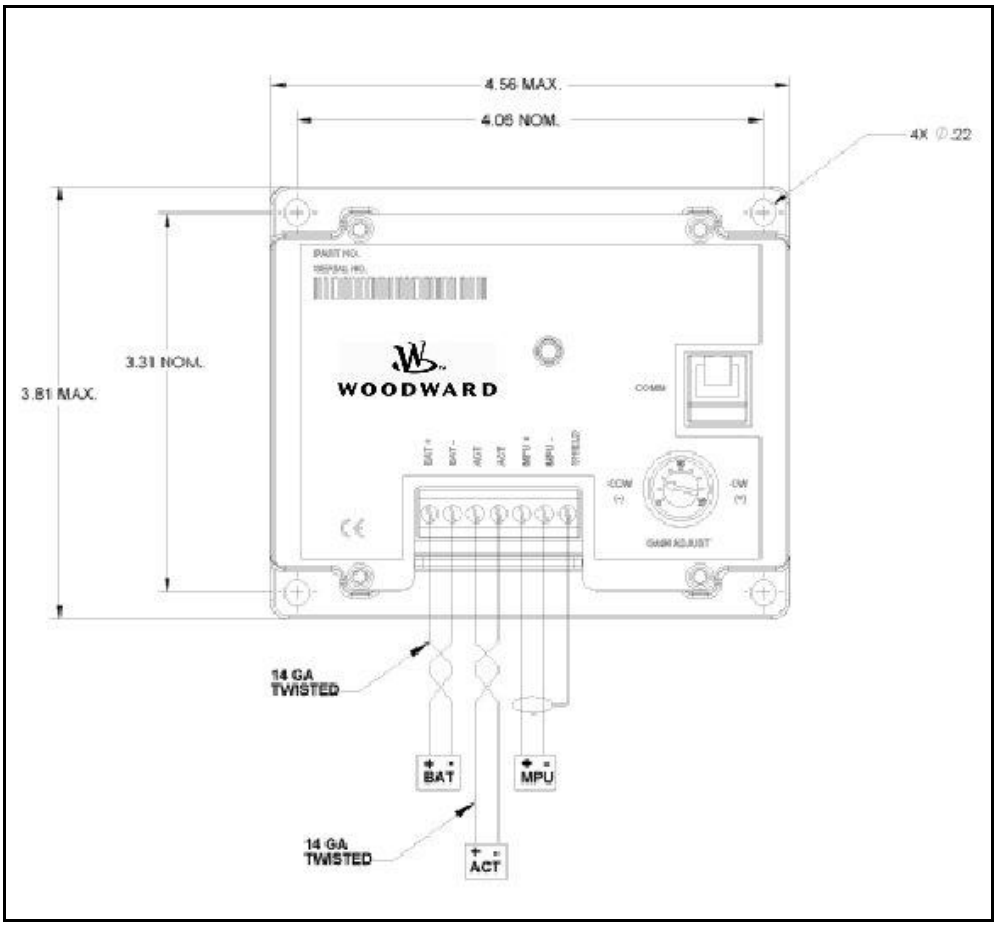

Katolight Service - Master Repair Manual - Page 2568

DPG-2145-001

Terminal Descriptions

NO.	NAME	FUNCTION
1	BAT+	Battery positive (Supply voltage range is 9 Vdc–30 Vdc)
2	ACT	Actuator drive output
3	Not Labeled	Digital input common
4	INC	Digital input to increase selected set speed (Active when tied to Pin 3)
5	IGN TACH	Ignition tachometer signal input
6	SET SPD 2	Set Speed B selected when this pin tied to Pin 12
7	BAT-	Battery negative
8	ACT	Actuator drive return
9	SHIELD	Ground connection for cable shielding
10	DEC	Digital input to decrease selected set speed (Active when tied to Pin 3)
11	IGN GND	Ignition ground signal
12	SET SPD 1	Set Speed A selected when this pin is open

Wiring Diagram

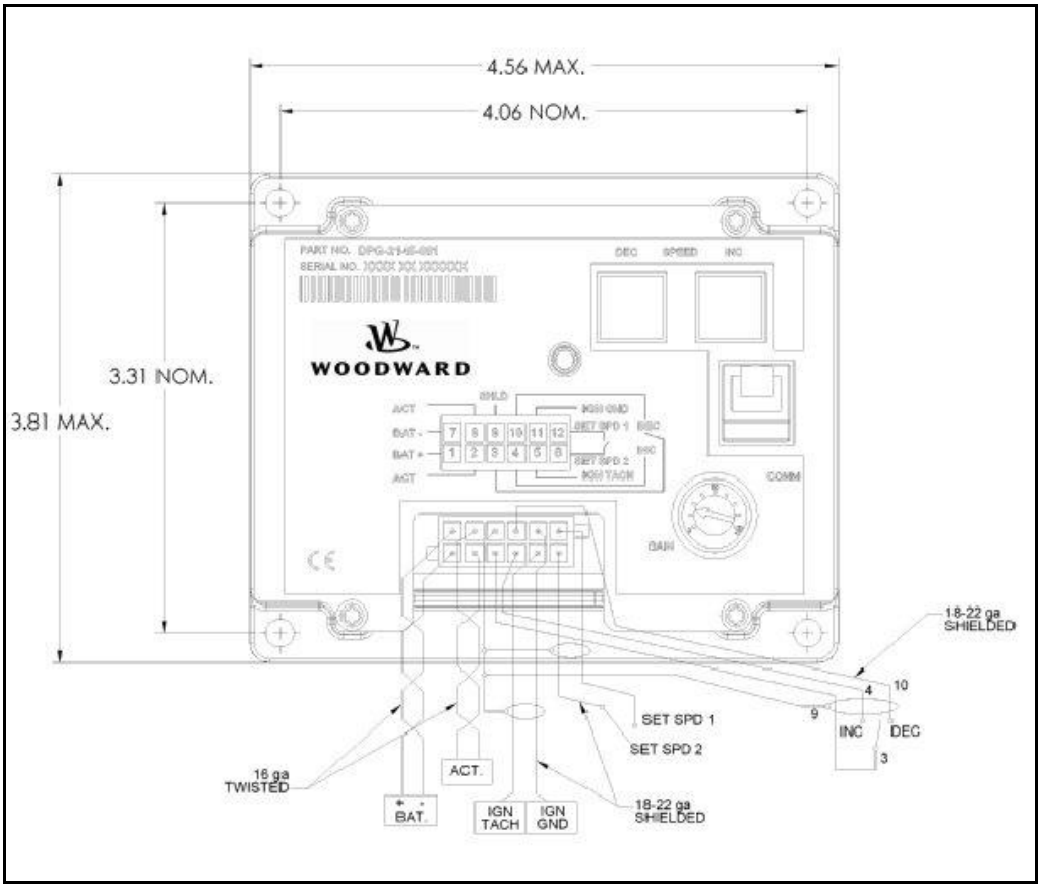

Katolight Service - Master Repair Manual - Page 2569

DPG-2146-001

Terminal Descriptions

NO.	NAME	FUNCTION
1	BAT+	Battery positive (Supply voltage range is 9 Vdc–30 Vdc)
2	BAT-	Battery negative
3	ACT	Actuator drive output
4	ACT	Actuator drive return
5	IGN TACH	Ignition tachometer signal input
6	IGN GND	Ignition ground signal
7	SHIELD	Ground connection for cable shielding

Wiring Diagram

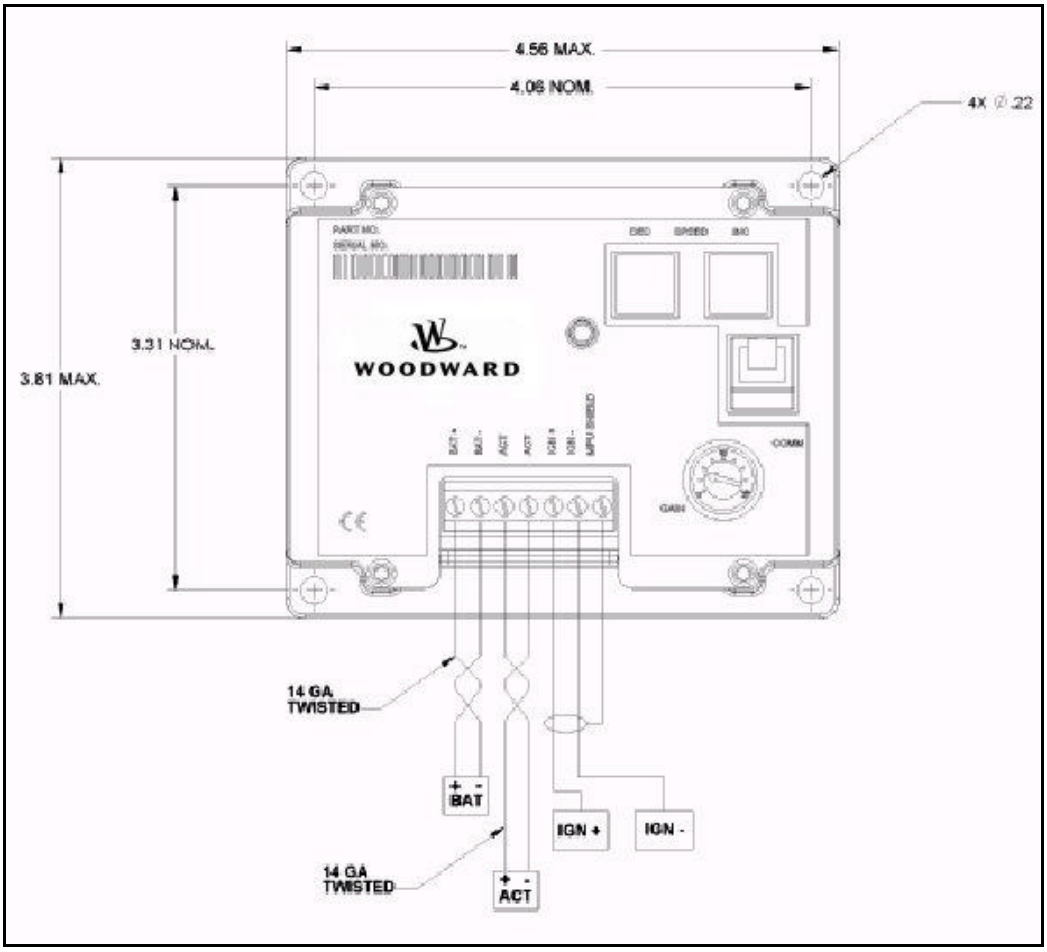

Katolight Service - Master Repair Manual - Page 2570

DPG-2155-001

Terminal Descriptions

NO.	NAME	FUNCTION
1	BAT+	Battery positive (Supply voltage range is 9 Vdc–30 Vdc)
2	ACT	Actuator drive output
3	Not Labeled	Digital input common
4	INC	Digital input to increase selected set speed (Active when tied to Pin 3)
5	MPU+	Magnetic pickup signal inputs
6	SET SPD 2	Set Speed B selected when this pin tied to Pin 12
7	BAT-	Battery negative
8	ACT	Actuator drive return
9	SHIELD	Ground connection for cable shielding
10	DEC	Digital input to decrease selected set speed (Active when tied to Pin 3)
11	MPU-	Magnetic pickup ground
12	SET SPD 1	Set Speed A selected when this pin is open

Wiring Diagram

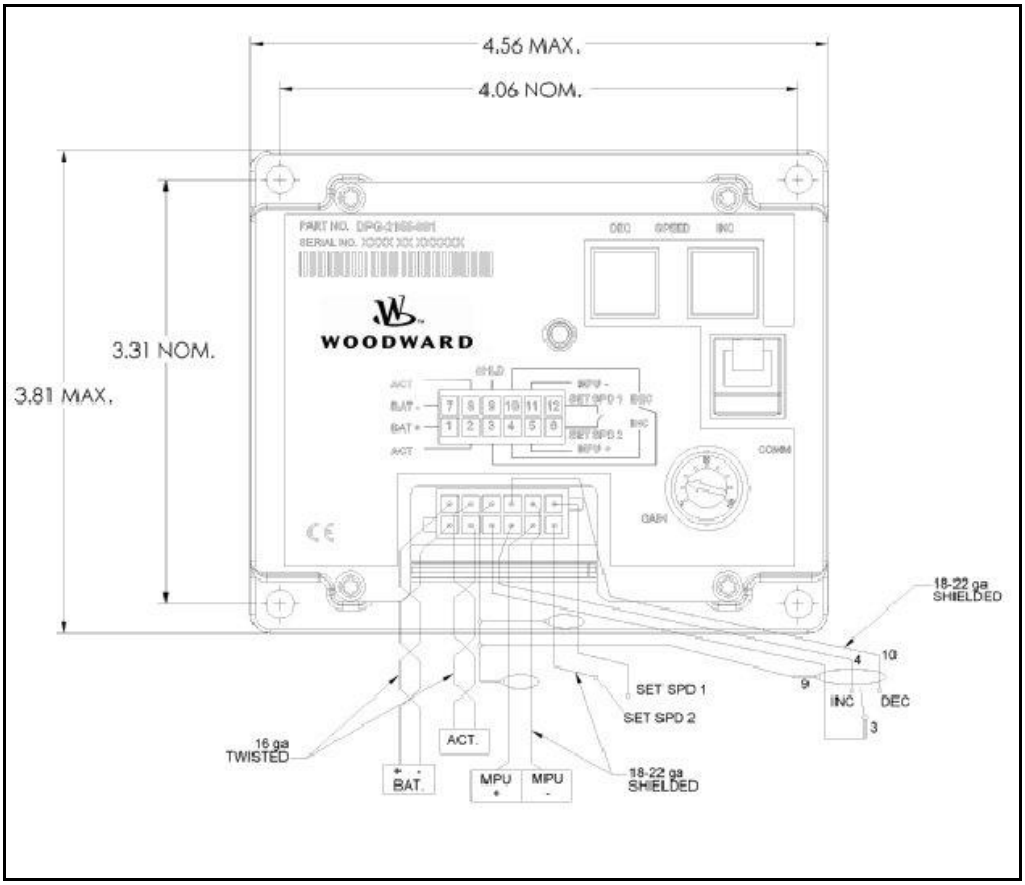

Katolight Service - Master Repair Manual - Page 2571

Chapter 7
Diagnostics & Troubleshooting

LED Indications

LED STATE	MEANING
Off	Controller is either not currently powered, or is being reverse powered. (Check polarity of supplied power.) If correctly powered, then controller is malfunctioning.
Blinking Slow (1/2 Hz)	Controller is powered, but not sensing a speed signal. OK if engine is not running. If the engine is running, then this indicates a fault with the speed signal.
Blinking Fast (1½ Hz)	Controller is powered and an engine speed signal is being detected. If the engine is not running, then this indicates electrical noise on the speed signal wires.
ON and Not Blinking	Controller is powered and is malfunctioning. Replace controller.

Troubleshooting Table

SYMPTOM	REMEDY
LED Display Does Not Light Up When Governor Is Powered	BAT + and BAT – leads are reversed. Check wiring. Battery voltage too low. Should measure between 9 and 30 VDC Controller is defective. Replace it.
Unable to Modify Parameters	The parameter's value is the maximum value allowed. The parameter's value is the minimum value allowed. Universal PST not communicating with the controller. Keypad failure, replace unit.
Engine Does Not Start	Actuator leads not connected or shorted. No fuel source. Turn on fuel source. Battery voltage is low. Charge or replace the battery. Set speed is lower than crank speed. Increase the set speed. Startup Rate setting is too low. The target speed ramps up too slow. Startup Limit is too low, limiting the actuator drive signal too much. Is the MPU speed signal present? It should read 2.0 VRMS minimum. Adjust magnetic pickup (MPU) gap. Try reversing the MPU leads. If a speed signal is present, measure actuator output duty cycle. If not greater than 5%, then restore all parameter values to factory default settings and crank the engine again. Final target speed must be greater than crank speed before the governor will attempt to drive the actuator open.
Engine Overspeeds at Startup	Increase the Proportional value. Increase the appropriate Gain value. Decrease the Startup Ramp Rate.
Engine Does Not Reach Set Speed	Improve PID tuning. Integral too low or zero PID values are too low. A tuning that is too soft can prevent the governor from delivering the needed actuator drive signal to reach the set speed.

Katolight Service - Master Repair Manual - Page 2572

Engine Does Not Reach Set Speed (cont'd.)	PID values are too high. Tuning is too hot or oversensitive to small speed errors, which causes the governor to make large, rapid changes in actuator drive signal, creating an average signal that is inadequate. The Integral Low Limit setting is too high. Return the value to the default setting of zero. The Integral High Limit setting is too low. Return the value to the default setting of 99.
Engine Takes Too Long to Reach the Set Speed	Improve PID tuning. Integral setting is too low. Startup Rate setting is too low. Accel Rate setting is too low. Speed Filter setting is too high.
Engine Does Not Track Speed Setting Changes	Is the LED blinking fast (3 Hz)? No = not sensing speed. Is the selected set speed parameter being modified? A PID value or a Gain value is too high. A PID value is too low or zero. Accel Rate is set too low. Decel Rate is set too low.
Sluggish Response to Load Changes	Gain too low. Improve PID tuning. Speed filter setting is too high.
Engine Instability With No Load	Improve PID tuning. Speed filter setting is too low. Fuel is restricted. Check actuator linkage. Battery voltage is too low.
Engine Instability With Load	Improve PID tuning. Fuel is restricted. Check actuator linkage. Battery voltage is too low.
Engine Unable to Carry Rated Load	PID values may be too high, causing the governor to overreact and make large, rapid changes in PWM duty cycle output to the actuator. Improve PID tuning. Fuel is restricted. Check actuator linkage.

Katolight Service - Master Repair Manual - Page 2573

Chapter 8.
Service Options

Product Service Options

The following factory options are available for servicing Woodward equipment, based on the standard Woodward Product and Service Warranty (5-01-1205) that is in effect at the time the product is purchased from Woodward or the service is performed:

- Replacement/Exchange (24-hour service)
- Flat Rate Repair
- Flat Rate Remanufacture

If you are experiencing problems with installation or unsatisfactory performance of an installed system, the following options are available:

- Consult the troubleshooting guide in the manual.
- Contact Woodward technical assistance (see “How to Contact Woodward” later in this chapter) and discuss your problem. In most cases, your problem can be resolved over the phone. If not, you can select which course of action you wish to pursue based on the available services listed in this section.

Replacement/Exchange

Replacement/Exchange is a premium program designed for the user who is in need of immediate service. It allows you to request and receive a like-new replacement unit in minimum time (usually within 24 hours of the request), providing a suitable unit is available at the time of the request, thereby minimizing costly downtime. This is also a flat rate structured program and includes the full standard Woodward product warranty (Woodward Product and Service Warranty 5-01-1205).

This option allows you to call in the event of an unexpected outage, or in advance of a scheduled outage, to request a replacement control unit. If the unit is available at the time of the call, it can usually be shipped out within 24 hours. You replace your field control unit with the like-new replacement and return the field unit to the Woodward facility as explained below (see “Returning Equipment for Repair” later in this chapter).

Charges for the Replacement/Exchange service are based on a flat rate plus shipping expenses. You are invoiced the flat rate replacement/exchange charge plus a core charge at the time the replacement unit is shipped. If the core (field unit) is returned to Woodward within 60 days, Woodward will issue a credit for the core charge. [The core charge is the average difference between the flat rate replacement/exchange charge and the current list price of a new unit.]

Return Shipment Authorization Label. To ensure prompt receipt of the core, and avoid additional charges, the package must be properly marked. A return authorization label is included with every Replacement/Exchange unit that leaves Woodward. The core should be repackaged and the return authorization label affixed to the outside of the package. Without the authorization label, receipt of the returned core could be delayed and cause additional charges to be applied.

Katolight Service - Master Repair Manual - Page 2574

Flat Rate Repair

Flat Rate Repair is available for the majority of standard products in the field. This program offers you repair service for your products with the advantage of knowing in advance what the cost will be. All repair work carries the standard Woodward service warranty (Woodward Product and Service Warranty 5-01-1205) on replaced parts and labor.

Flat Rate Remanufacture

Flat Rate Remanufacture is very similar to the Flat Rate Repair option with the exception that the unit will be returned to you in “like-new” condition and carry with it the full standard Woodward product warranty (Woodward Product and Service Warranty 5-01-1205). This option is applicable to mechanical products only.

Returning Equipment for Repair

If a control (or any part of an electronic control) is to be returned to Woodward for repair, please contact Woodward in advance to obtain a Return Authorization Number. When shipping the item(s), attach a tag with the following information:

- name and location where the control is installed;
- name and phone number of contact person;
- complete Woodward part number(s) and serial number(s);
- description of the problem;
- instructions describing the desired type of repair.



CAUTION

To prevent damage to electronic components caused by improper handling, read and observe the precautions in Woodward manual 82715, *Guide for Handling and Protection of Electronic Controls, Printed Circuit Boards, and Modules*.

Packing a Control

Use the following materials when returning a complete control:

- protective caps on any connectors;
- antistatic protective bags on all electronic modules;
- packing materials that will not damage the surface of the unit;
- at least 4 inches (100 mm) of tightly packed, industry-approved packing material;
- a packing carton with double walls;
- a strong tape around the outside of the carton for increased strength.

Katolight Service - Master Repair Manual - Page 2575

Return Authorization Number

When returning equipment to Woodward, please telephone and ask for the Customer Service Department [1 (800) 523-2831 in North America or +1 (970) 482-5811]. They will help expedite the processing of your order through our distributors or local service facility. To expedite the repair process, contact Woodward in advance to obtain a Return Authorization Number, and arrange for issue of a purchase order for the item(s) to be repaired. No work can be started until a purchase order is received.



NOTE

We highly recommend that you make arrangement in advance for return shipments. Contact a Woodward customer service representative at 1 (800) 523-2831 in North America or +1 (970) 482-5811 for instructions and for a Return Authorization Number.

Replacement Parts

When ordering replacement parts for controls, include the following information:

- the part number(s) (XXXX-XXXX) that is on the enclosure nameplate;
- the unit serial number, which is also on the nameplate.

How to Contact Woodward

In North America use the following address when shipping or corresponding:

Woodward Governor Company
PO Box 1519
1000 East Drake Rd
Fort Collins CO 80522-1519, USA

Telephone—+1 (970) 482-5811 (24 hours a day)
Toll-free Phone (in North America)—1 (800) 523-2831
Fax—+1 (970) 498-3058

For assistance outside North America, call one of the following international Woodward facilities to obtain the address and phone number of the facility nearest your location where you will be able to get information and service.

Facility	Phone Number
Brazil	+55 (19) 3708 4800
India	+91 (129) 230 7111
Japan	+81 (476) 93-4661
The Netherlands	+31 (23) 5661111

You can also contact the Woodward Customer Service Department or consult our worldwide directory on Woodward's website (**www.woodward.com**) for the name of your nearest Woodward distributor or service facility. [For worldwide directory information, go to **www.woodward.com/ic/locations**.]

Katolight Service - Master Repair Manual - Page 2576

Engineering Services

Woodward Industrial Controls Engineering Services offers the following after-sales support for Woodward products. For these services, you can contact us by telephone, by email, or through the Woodward website.

- Technical Support
- Product Training
- Field Service

Contact information:
Telephone—+1 (970) 482-5811
Toll-free Phone (in North America)—1 (800) 523-2831
Email—icinfo@woodward.com
Website—**www.woodward.com/ic**

Technical Support is available through our many worldwide locations or our authorized distributors, depending upon the product. This service can assist you with technical questions or problem solving during normal business hours. Emergency assistance is also available during non-business hours by phoning our toll-free number and stating the urgency of your problem. For technical support, please contact us via telephone, email us, or use our website and reference ***Customer Services*** and then ***Technical Support***.

Product Training is available at many of our worldwide locations (standard classes). We also offer customized classes, which can be tailored to your needs and can be held at one of our locations or at your site. This training, conducted by experienced personnel, will assure that you will be able to maintain system reliability and availability. For information concerning training, please contact us via telephone, email us, or use our website and reference ***Customer Services*** and then ***Product Training***.

Field Service engineering on-site support is available, depending on the product and location, from one of our many worldwide locations or from one of our authorized distributors. The field engineers are experienced both on Woodward products as well as on much of the non-Woodward equipment with which our products interface. For field service engineering assistance, please contact us via telephone, email us, or use our website and reference ***Customer Services*** and then ***Technical Support***.

Katolight Service - Master Repair Manual - Page 2577

Technical Assistance

If you need to telephone for technical assistance, you will need to provide the following information. Please write it down here before phoning:

General

Your Name_____
Site Location_____
Phone Number_____
Fax Number_____

Prime Mover Information

Engine/Turbine Model Number_____
Manufacturer_____
Number of Cylinders (if applicable)_____
Type of Fuel (gas, gaseous, steam, etc)_____
Rating_____
Application_____

Control/Governor Information

Please list all Woodward governors, actuators, and electronic controls in your system:

Woodward Part Number and Revision Letter
_____
Control Description or Governor Type
_____
Serial Number _____

Woodward Part Number and Revision Letter
_____
Control Description or Governor Type
_____
Serial Number _____

Woodward Part Number and Revision Letter
_____
Control Description or Governor Type
_____
Serial Number _____

If you have an electronic or programmable control, please have the adjustment setting positions or the menu settings written down and with you at the time of the call.

Katolight Service - Master Repair Manual - Page 2578

Katolight Service - Master Repair Manual - Page 2579

We appreciate your comments about the content of our publications.

Send comments to: icinfo@woodward.com

Please include the manual number from the front cover of this publication.

WOODWARD

PO Box 1519, Fort Collins CO 80522-1519, USA
1000 East Drake Road, Fort Collins CO 80525, USA
Phone +1 (970) 482-5811 • Fax +1 (970) 498-3058

Email and Website—www.woodward.com

FM 57982
BS EN ISO 9001:1994
6 March 2001

**Woodward has company-owned plants, subsidiaries, and branches,
as well as authorized distributors and other authorized service and sales facilities throughout the world.**

Complete address / phone / fax / email information for all locations is available on our website.

04/4/M

TECHNICAL MANUAL
FOR
DYNA 8000, 8200 & 8400
ELECTRONIC GOVERNOR



DYNA 8000

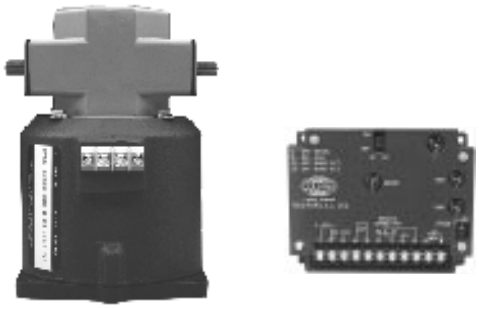

DYNA 8200



DYNA 8400

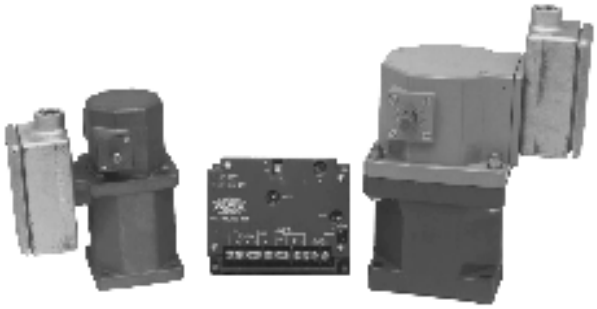

DYNA 8000-400 & DYNA 8400-400

F-23721-5

CONTENTS

SECTION	DESCRIPTION	PAGE
1	GENERAL INFORMATION	3
2	SPECIFICATIONS	3
3	FUNCTIONAL DESCRIPTION	5
4	INSTALLATION	6
5	CALIBRATION OF DYN1-1065X	9
6	CALIBRATION OF DYN1-1068X	11
7	TROUBLESHOOTING	13
8	INSTALLATION DIMENSIONS	15

1. GENERAL INFORMATION

1.1 INTRODUCTION

The DYNA 8000, DYNA 8200 and DYNA 8400 governor system provides an engine governor for speed and power control of piston and gas turbine engines or steam and water turbines.

The actuator is a simple, proportional, electric solenoid having a sliding armature whose magnetic force is proportional to input coil current. The armature glides on anti-friction bearings and is balanced between the force of its return spring and the magnetic force, thus providing a hysteresis-free linear movement. The linear motion is converted to an output shaft rotation by a crank arm.

The hazardous duty DYNA 8000 and DYNA 8400 actuators provide units that are UL listed for Class I, Division 2, Group D, hazardous duty applications that are often encountered in the petroleum or chemical industries. The hazardous duty actuators can be used to provide an engine governor for speed and power control of piston and gas turbine engines.

1.2 TYPICAL APPLICATIONS

Typical applications are speed governing, remote throttle control, generator sets, power carts and pump set applications.

1.3 STANDARD FEATURES

- All electric
- All engine compatible
- Mounts in any position
- Engine mounted (actuator only)
- High reliability due to few moving parts
- Proportional actuator
- No hydraulic or oil lines
- No special maintenance
- Spring returns output shaft to minimum position on removal of power or loss of magnetic pickup signal
- Precise repeatability

2. SPECIFICATIONS

2.1 CONTROLLER SPECIFICATIONS

2.1.1 Operating Voltage: 12 VDC or 24 VDC ±20%

2.1.2 Ambient Operating Temperature:
-40 to +180°F (-40 to +85°C).

2.1.3 Temperature Stability: Better than ±0.5% over a temperature range of -40 to +167°F (-40 to +75°C).

2.1.4 Steady State Speed Band: ±0.25%

2.1.5 Adjustments: Speed, Gain, Integral, and Droop.

2.1.6 Circuit Boards: Boards are covered with a heavy conformal coating for moisture and vibration protection.

2.1.7 Connection: Terminal strip.

2.1.8 Mechanical Vibration: Withstands the following vibration without failure of degraded performance: 0.06 inch double amplitude at 5 to 18 Hz; 1 G at 18 to 30 Hz; 0.02 inch double amplitude at 30 to 48 Hz; 2.5 G's at 48 to 70 Hz.

2.1.9 The same DYN1-1065X or DYN1-1068X Series can be used on a DYNA 8000, DYNA 8200 or DYNA 8400 actuator. The DYN1-1068X governor control box provides a wider range of adjustment than the DYN1-1065X. The DYN1-1068X can be used where maximum performance is desired or for some engines which are possibly more difficult to control.

2.1.10 DYNA 8000 CONTROLLER

Output Current @ 12 VDC	Nominal Quiescent Current	80 mA
	Maximum Amperes @ Stall	13 amps
Output Current @ 24 VDC	Nominal Quiescent Current	80 mA
	Maximum Amperes @ Stall	13 amps
Weight	Kilograms	0.863
	Pounds	1.9

2.1.11 DYNA 8000 CONTROLLER INPUT SIGNAL FREQUENCY

$$\text{Input Signal Frequency in Hertz} = \frac{\text{Engine RPM x Number of Gear Teeth on Flywheel}}{\text{60 Seconds}}$$

Select controller for the correct input signal frequency range generated by the magnetic pickup at the maximum engine operated (RPM) speed.

2.1.12 AVAILABLE CONTROLLER MODELS

Controllers: Speed	Input Signal Frequency
• DYN1-10652-000-0-12/24	250 - 1200 Hz
• DYN1-10653-000-0-12/24	1200 - 2500 Hz
• DYN1-10654-000-0-12/24	2500 - 5000 Hz
• DYN1-10656-000-0-12/24	5000 - 9500 Hz
• DYN1-10682-000-0-12/24	250 - 1200 Hz
• DYN1-10683-000-0-12/24	1200 - 2500 Hz
• DYN1-10684-000-0-12/24	2500 - 5000 Hz
• DYN1-10686-000-0-12/24	5000 - 9500 Hz

2.2. DYNA 8000 & DYNA 8000 UL APPROVAL, HAZARDOUS DUTY, CLASS 1, DIVISION 2, GROUP D ACTUATOR SPECIFICATIONS

2.2.1 Operating Voltage: 12 VDC or 25 VDC ±20%

2.2.2 Ambient Operating Temperature:
-65 to +255°F (-55 to +125°C).

2.2.3 Sealed Unit: Oil, water and dust tight.

2.2.4 Connection: Terminal strip or "MS" Connector.

2.2.5 Mechanical Vibration: 5 to 500 Hz, Curve F, per MIL-STD. 810D, Method 514-2.

2.2.6 DYNA 8000 ACTUATORS

Work	Joules	1.2
	Foot-Pounds	0.9
Torque	Newton-Meters	1.4
	Pound-Foot	1.0
Output	Rotary	35°
Weight	Kilograms	5
	Pounds	11.0
Current @ 12 VDC	Maximum Amperes @ Stall	12.5
	Nominal Steady State Amperes	3.5
Current @ 24 VDC	Maximum Amperes @ Stall	9.5
	Nominal Steady State Amperes	1.5
Nominal Response Time for 63% of Stroke (Seconds)		0.030

2.2.7 AVAILABLE DYNA 8000 ACTUATOR MODELS WITH CLOCKWISE OUTPUT SHAFT ROTATION (Standard Mounted Units)

- DYNC-11020-000-0-12 Standard Clockwise
  DYNC-11020-000-0-24 Output Shaft Rotation
- DYNC-11021-000-0-12 Actuator Head Positioned 180°
  DYNC-11021-000-0-24 from Standard DYNC-11020
- DYNC-11022-000-0-12 Actuator Head Positioned 90°
  DYNC-11022-000-0-24 CCW from Standard DYNC-11020
- DYNC-11023-000-0-12 Actuator Head Positioned 90°
  DYNC-11023-000-0-24 CW from Standard DYNC-11020

2.2.8 AVAILABLE DYNA 8000 ACTUATOR MODELS WITH CLOCKWISE OUTPUT SHAFT ROTATION (Side Mounted Units)

- DYNC-11020-300-0-12 Standard Clockwise
  DYNC-11020-300-0-24 Output Shaft Rotation
- DYNC-11021-300-0-12 Actuator Head Positioned 180°
  DYNC-11021-300-0-24 from Standard DYNC-11020
- DYNC-11022-300-0-12 Actuator Head Positioned 90°
  DYNC-11022-300-0-24 CCW from Standard DYNC-11020
- DYNC-11023-300-0-12 Actuator Head Positioned 90°
  DYNC-11023-300-0-24 CW from Standard DYNC-11020

2.2.9 AVAILABLE DYNA 8000 ACTUATOR MODELS WITH COUNTERCLOCKWISE OUTPUT SHAFT ROTATION (Standard Mounted Units)

- DYNC-11024-000-0-12 Standard Clockwise
  DYNC-11024-000-0-24 Output Shaft Rotation
- DYNC-11025-000-0-12 Actuator Head Positioned 90°
  DYNC-11025-000-0-24 CW from Standard DYNC-11024
- DYNC-11026-000-0-12 Actuator Head Positioned 180°
  DYNC-11026-000-0-24 CCW from Standard DYNC-11024
- DYNC-11028-000-0-12 Actuator Head Positioned 90°
  DYNC-11028-000-0-24 CCW from Standard DYNC-11024

2.2.10 AVAILABLE DYNA 8000 ACTUATOR MODELS WITH COUNTERCLOCKWISE OUTPUT SHAFT ROTATION (Side Mounted Units)

- DYNC-11024-300-0-12 Standard Clockwise
  DYNC-11024-300-0-24 Output Shaft Rotation
- DYNC-11025-300-0-12 Actuator Head Positioned 90°
  DYNC-11025-300-0-24 CW from Standard DYNC-11024
- DYNC-11026-300-0-12 Actuator Head Positioned 180°
  DYNC-11026-300-0-24 CCW from Standard DYNC-11024
- DYNC-11028-300-0-12 Actuator Head Positioned 90°
- DYNC-11028-300-0-24 CCW from Standard DYNC-11024

2.2.11 AVAILABLE DYNA 8000 HAZARDOUS DUTY ACTUATOR MODELS WITH CLOCKWISE OUTPUT SHAFT ROTATION (Standard Mounted Units)

- DYNC-11020-400-0-12 Standard Clockwise
  DYNC-11020-400-0-24 Output Shaft Rotation
- DYNC-11021-400-0-12 Actuator Head Positioned 180°
  DYNC-11021-400-0-24 from Standard DYNC-11020
- DYNC-11022-400-0-12 Actuator Head Positioned 90°
  DYNC-11022-400-0-24 CCW from Standard DYNC-11020

2.2.12 AVAILABLE DYNA 8000 HAZARDOUS DUTY ACTUATOR MODELS WITH COUNTERCLOCKWISE OUTPUT SHAFT ROTATION (Standard Mounted Units)

- DYNC-11024-400-0-12 Standard Clockwise
  DYNC-11024-400-0-24 Output Shaft Rotation
- DYNC-11025-400-0-12 Actuator Head Positioned 90°
  DYNC-11025-400-0-24 CW from Standard DYNC-11024
- DYNC-11026-400-0-12 Actuator Head Positioned 180°
  DYNC-11026-400-0-24 CCW from Standard DYNC-11024

2.2.13 AVAILABLE DYNA 8000 HAZARDOUS DUTY ACTUATOR MODELS WITH CLOCKWISE OUTPUT SHAFT ROTATION (Side Mounted Units)

- DYNC-11020-401-0-12 Standard Clockwise
  DYNC-11020-401-0-24 Output Shaft Rotation
- DYNC-11021-401-0-12 Actuator Head Positioned 180°
  DYNC-11021-401-0-24 from Standard DYNC-11020
- DYNC-11022-401-0-12 Actuator Head Positioned 90°
  DYNC-11022-401-0-24 CCW from Standard DYNC-11020

2.2.14 AVAILABLE DYNA 8000 HAZARDOUS DUTY ACTUATOR MODELS WITH COUNTERCLOCKWISE OUTPUT SHAFT ROTATION (Side Mounted Units)

- DYNC-11024-401-0-12 Standard Clockwise
  DYNC-11024-401-0-24 Output Shaft Rotation
- DYNC-11025-401-0-12 Actuator Head Positioned 90°
  DYNC-11025-401-0-24 CW from Standard DYNC-11024
- DYNC-11026-401-0-12 Actuator Head Positioned 180°
  DYNC-11026-401-0-24 CCW from Standard DYNC-11024

2.3 DYNA 8200 ACTUATORS

2.3.1 Operating Voltage: 12 or 24 VDC ±20%.

2.3.2 Ambient Operating Temperature:
-65 to +255F (-55 to +125°C).

2.3.3 Sealed Unit: Oil, water and dust tight.

2.3.4 Connection: Terminal strip or "MS Connector.

2.3.5 Mechanical Vibration: 5 to 500 Hz, Curve F, per MIL-STD. 810D, Method 514-2.

Work	Joules	2.85
	Foot-Pounds	2.10
Torque	Newton-Meters	4.07
	Pound-Foot	3.00
Output	Rotary	45°
Weight	Kilograms	8.4
	Pounds	18.5
Current@ 12 VDC	Maximum Amperes @ Stall	14.75
	Nominal Steady State Amperes	4.5
Current @ 24 VDC	Maximum Amperes @ Stall	14.0
	Nominal Steady State Amperes	3.5
Nominal Response Time for 63% of Stroke (Seconds)		.138

2.3.6 AVAILABLE DYNA 8200 ACTUATOR MODELS WITH CLOCKWISE OUTPUT SHAFT ROTATION

- DYNC-12000-000-0-12 Standard Clockwise
  DYNC-12000-000-0-24 Output Shaft Rotation

- DYNC-12001-000-0-12 Actuator Head Positioned 180°
  DYNC-12001-000-0-24 from Standard DYNC-12000

- DYNC-12002-000-0-12 Actuator Head Positioned 90°
  DYNC-12002-000-0-24 CCW from Standard DYNC-12000

- DYNC-12003-000-0-12 Actuator Head Positioned 90°
  DYNC-12003-000-0-24 CW from Standard DYNC-12000

2.4 DYNA 8400 & DYNA 8400 UL APPROVAL, HAZARDOUS DUTY, CLASS 1, DIVISION 2, GROUP D ACTUATOR SPECIFICATIONS

2.4.1 Operating Voltage: 24 VDC ±20%.

2.4.2 Ambient Operating Temperature:
-65 to +255F (-55 to +125°C).

2.4.3 Sealed Unit: Oil, water and dust tight.

2.4.4 Connection: Terminal strip or "MS Connector.

2.4.5 Mechanical Vibration: 5 to 500 Hz, Curve F, per MIL-STD. 810D, Method 514-2.

2.4.6 DYNA 8400 ACTUATORS

Work	Joules	5.8
	Foot-Pounds	4.3
Torque	Newton-Meters	7.3
	Pound-Foot	5.4
Output	Rotary	45°
Weight	Kilograms	12.2
	Pounds	27
Current @ 24 VDC	Maximum Amperes @ Stall	13
	Nominal Steady State Amperes	2.0
Nominal Response Time for 63% of Stroke (Seconds)		0.104

2.4.7 AVAILABLE DYNA 8400 ACTUATOR MODELS WITH TERMINAL STRIP CONNECTION

- DYNC-14800-000-0-24 Through Output Shaft Making
  Available CW and CCW Output

2.4.8 AVAILABLE DYNA 8400 ACTUATOR MODELS WITH 2-PIN MS SCREW ON CONNECTOR

- DYNC-14801-000-0-24 Through Output Shaft Making
  Available CW and CCW Output

2.4.9 AVAILABLE DYNA 8400 HAZARDOUS DUTY ACTUATOR WITH TERMINAL STRIP CONNECTION INSIDE CAST IRON JUNCTION BOX

- DYNC-14800-400-0-24 Through Output Shaft Making
  Available CW and CCW Output

3. FUNCTIONAL DESCRIPTION

3.1 ACTUATOR

The actuator consists of an electro-magnet with an iron armature rolling on the center shaft bearings. The actuator is provided with a return spring which balances the magnetic force of the armature. When DC current flows in the coil, the magnetic force tends to move the armature in the stator and this linear motion is transformed into rotary motion through a crank arm that forms part of the output shaft.

3.2 CONTROLLER

The electronic controller is the information processing unit of the governor assembly. It contains electronic components which process the input signal from the magnetic pickup and control the engine to the desired speed/RPM set into the controller. Electronic adjustments are available on the controller for field adjusting the unit as necessary.

3.3 DC POWER SOURCE

The governor system receives its power from a battery or an AC to DC power supply supplying 12 or 24 VDC ±20% to match the governor voltage. The average operating current consumption is 2.5 to 3.5 amperes and the highest consumption is 14.75 amperes during engine start-up or during a large load change. The power source must be rated above maximum stall current.

3.4 COMPONENT LOCATION

The actuator of the governor assembly is mounted on the engine next to the fuel system. The magnetic pickup is normally mounted in the flywheel housing in such a way that it can count the teeth on the starter ring gear. The controller is off-mounted or installed in the engine control panel or cabinet.

3.5 ISOCHRONOUS OPERATION

Isochronous operation is obtained by setting droop potentiometer fully counterclockwise. The DYNA governor is all electric, and it is normally operated in the isochronous mode; i.e., engine RPM is constant (±0.25%) under steady state load conditions, up to the engine's maximum capability, regardless of load on the engine.

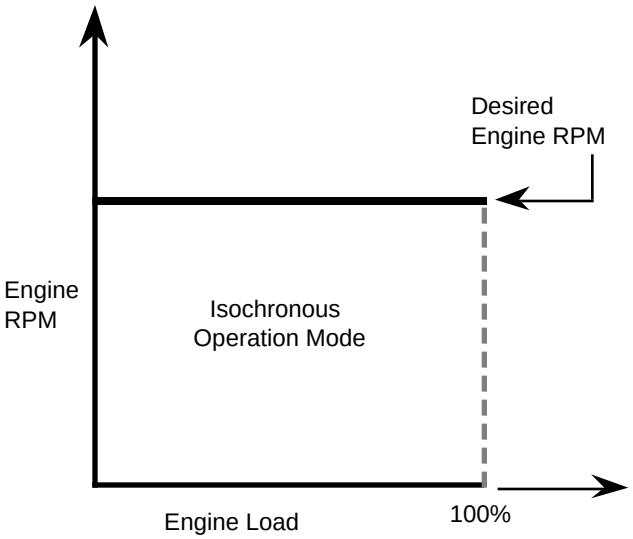

3.6 DROOP OPERATION

Droop operation is obtained by setting the droop potentiometer. Clockwise increases the droop. The amount of droop for a given setting depends on the magnetic pickup frequency and no load to full load actuator shaft rotation. A droop potentiometer setting of 10 o'clock will give about 4% droop, no load to full load when the pickup frequency is 4260 Hz and actuator shaft rotation is approximately 30 degrees from no load to full load. Lower pickup frequency or smaller shaft rotation results in less droop for the system.

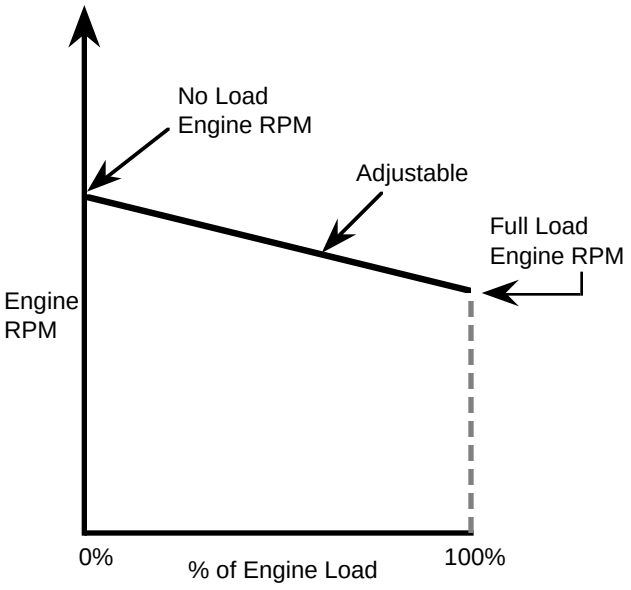

3.7 REMOTE SPEED ADJUSTMENT

An optional remote speed selector (DYNS-10000) is available for adjusting engine RPM from up to 90 meters (300 ft.) from the engine. See the Electrical Wiring Schematic. The potentiometer can be connected for a narrow (fine) or wide speed range control.

4. INSTALLATION

4.1 PROCEDURE

4.1.1 Mount the actuator on a suitable rigid steel bracket or plate.

NOTE

Mounting information and kits are usually available for a particular engine. Contact Sales Representative.

4.1.2 Set up the linkage and rod end bearings (see 4.2).

4.1.3 Install the speed sensor with SAE threads (magnetic pickup)*.

*Magnetic pickups with metric threads are available. Thread — M16 x 1.5 — 6 g. Tap Drill Size — 14.5 ∅ mm.

4.1.3.1 Remove the inspection cover over the ring gear teeth. The teeth should be free of burrs, excessive grease or dirt.

4.1.3.2 The magnetic pickup should not be installed in inspection covers. Inspect the ring gear housing and pick a location where a 37/64" hole can be drilled such that the ring gear teeth will pass in front of the pickup pole face. After the 37/64" hole is drilled, use a 5/8-18 starting tap to cut threads for the magnetic pickup, then run a bottom tap through the hole.

NOTE

The tapped hole should be drilled as nearly perpendicular as possible over the center of the ring gear teeth.

4.1.3.3 Manually rotate the ring gear until a tooth face is directly in the center of the tapped hole. Gently turn the magnetic pickup clockwise into the hole until it bottoms on the tooth, and back off 1/4 turn. Tighten the jam nut firmly, maintaining the 1/4 turn position.

Katolight Service - Master Repair Manual - Page 2586

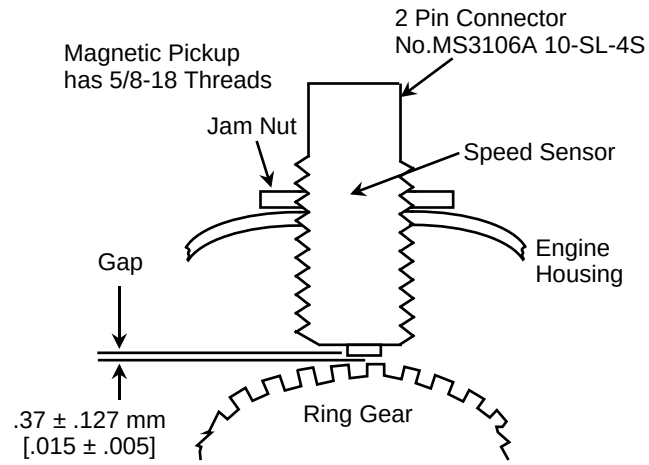

INSTALLATION OF MAGNETIC PICKUP

4.1.4 Mount the controller in the control panel.

4.1.5 Connect the wiring as shown in section 4.3 or according to your particular wiring diagram.

4.2 TYPICAL LINKAGE ARRANGEMENTS FOR THE ACTUATOR AND FUEL SYSTEM

4.2.1 ROTARY ACTUATOR TO ROTARY FUEL PUMP

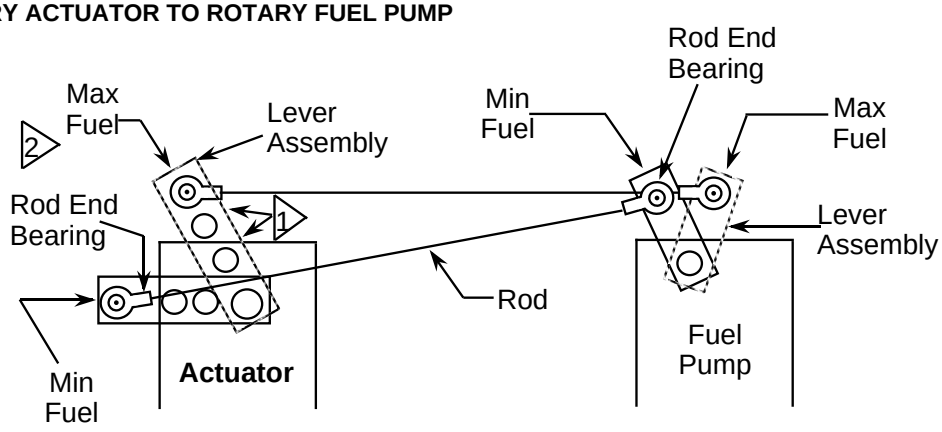

4.2.2 ROTARY ACTUATOR TO LINEAR FUEL PUMP

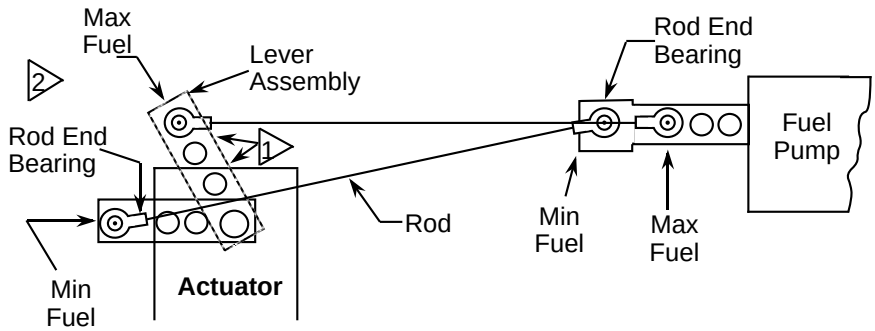

1 Choose hole in actuator lever which causes actuator to rotate through its maximum rotation to provide minimum to maximum fuel.

2 Non-Linear linkage to actuator is proper for best operation. Provides low GAIN at light loads and high GAIN at heavy loads.

4.3 TYPICAL WIRING DIAGRAM & CONTROLLER INSTALLATION DIMENSIONS
DIMENSIONS -- DYNA 8000 CONTROLLER -- DYN1 1065X and DYN1 1068X

Dimensions are in mm except as otherwise noted.
Dimensions in [ ] are in inches.

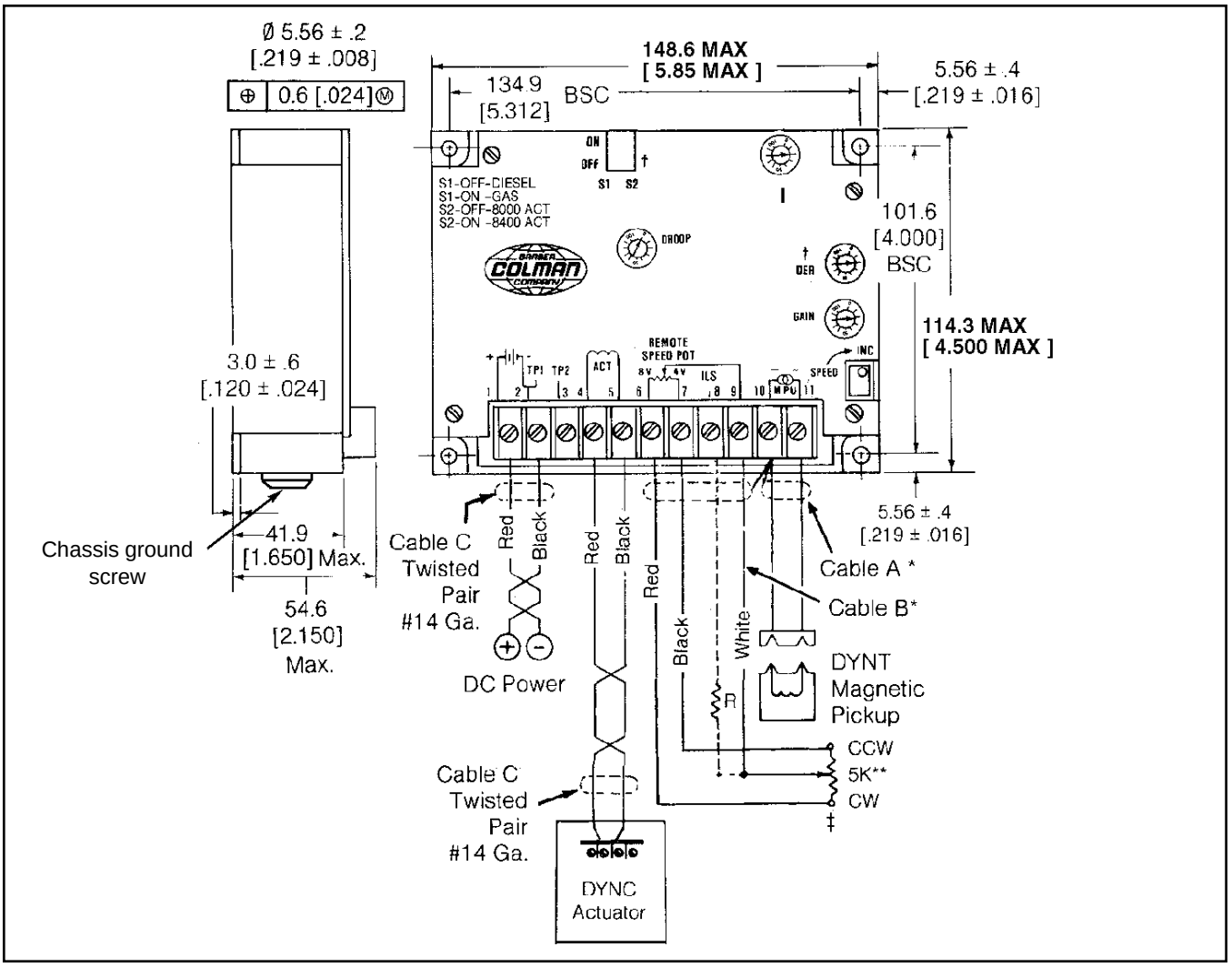

Cable A --	DYNK-44-XX	(specify length) (90° connector)
Cable B --	E26-22	(specify length)
Cable C --	DYNZ-70-4	(specify length) (terminal strip)
Cable C --	DYNK-210	(specify length) (MS connector)

Wiring Diagram for CE Controllers

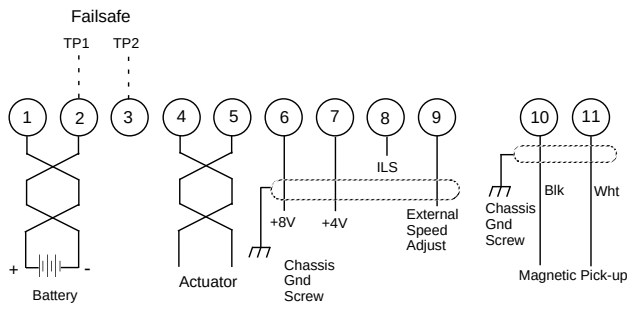

* Shielded cable -- Should be purchased from Barber-Colman or customer should purchase a cable with a wrapped mylar supported aluminum foil shield with a drain wire.

** Remote speed potentiometer and 499K ohm resistor is B-C P/N (DYNS-10000).

† The 5K remote speed potentiometer can be wired two different ways:

1. As shown by the solid line from the wiper of the 5K potentiometer and then connected to terminal #9 (no resistor required). Adjustable range is approximately ±5% at 1800 RPM.

2. As shown by the dashed line from the wiper of the 5K potentiometer through resistor R and then connected to terminal #8. Reducing the value of R increases the remote adjustable speed range.

5. CALIBRATION OF DYNA 8000 SERIES CONTROLLER — DYN1-1065X

Part Number	Input Signal Frequency Maximum
DYN1-10652-000-0-12/24 DYN1-10652-001-0-12/24*	250 to 1200 Hz
DYN1-10653-000-0-12/24 DYN1-10653-001-0-12/24*	1200 to 2500 Hz
DYN1-10654-000-0-12/24 DYN1-10654-001-0-12/24*	2500 to 5000 Hz
DYN1-10656-000-0-12/24 DYN1-10656-001-0-12/24*	5000 to 9000 Hz

* CE

NOTE

See Step 5.3 for proper procedures for setting switches S1 and S2, if you have a controller that has the two switches located on top of the controller.

5.1 CONNECTION INFORMATION

5.1.1 When using an ILS unit, the remote speed potentiometer may be left connected to the controller as shown.

5.1.2 When an ILS unit is used, connect 3-wire shielded cable to terminals 6, 7 and 8. Connect drain shield wire to terminal 10 at the controller only. Other end of drain shield wire is to be cut off and taped.

5.2 CALIBRATION AND ADJUSTMENTS

5.2.1 See diagram on page 8 for a reference guide before making any adjustments of the potentiometers, DROOP, I, GAIN and SPEED.

5.2.2 Power OFF - engine not operating.

5.2.3 Initial potentiometer settings:

5.2.3.1 Set the I adjustment three divisions from zero and the GAIN at the second division from zero.

5.2.3.2 For isochronous operation, set DROOP counterclockwise to minimum position as shown in paragraphs 3.5 and 3.6.

5.2.3.3 For DROOP operation, set DROOP potentiometer clockwise to obtain desired amount of DROOP from no-load to full load. Turning potentiometer clockwise increases DROOP.

NOTE

If the full 35° rotation of the actuator shaft is used and the linkage adjusted to use only the active fuel range, the maximum obtainable DROOP would be approximately 12% at full load.

5.3.3.4 See step 5.3 for setting switches S1 and S2.

5.2.4 If a remote speed potentiometer is used for narrow range, set it to mid-range. If the remote speed potentiometer is connected to terminals 6, 7 and 9, a resistor "R" in the wiper is not needed. This will provide approximately a ±5% adjustable speed range.

5.2.5 Start the engine.

5.2.5.1 Adjust the controller speed potentiometer until the engine is operating at the desired engine RPM. Clockwise increases engine RPM.

5.2.5.2 If the governor system is unstable, slightly reduce the GAIN setting.

NOTE

Except for the speed adjustment, the potentiometers have internal stops at the 0 and 100% positions.

5.2.6 With the engine unloaded, finalize the settings, I and GAIN adjustments as follows:

5.2.6.1 Turn the GAIN adjustment clockwise slowly until the actuator lever oscillates. (One may need to disturb actuator lever to cause oscillation.) Reduce the GAIN adjustment slowly counterclockwise until the lever is stable. Upset the lever by hand. If the lever oscillates 3 to 5 diminishing oscillations and stops, the setting is correct.

If system performance to load changes is satisfactory, omit step 5.2.6.2.

5.2.6.2 Reduce the GAIN setting counterclockwise one division. Next, turn the I adjustment fully clockwise while observing the actuator lever. If the lever does not become unstable, upset it by hand. When the lever slowly oscillates, turn the adjustment counterclockwise slowly until the lever is stable. Upset the lever again; it should oscillate 3 to 5 times and then become stable for optimum response.

NOTE

Use the settings of step 5.2.6.1 or step 5.2.6.2, whichever provides the best performance.

5.2.6.3 Unit is now calibrated.

5.3 ALL CONTROLLERS WITH REVISION J AND ABOVE HAVE SWITCHES S1 AND S2

These units have two new features now added to the DYN1 1065X series controllers. They are:

5.3.1 Two response ranges, for matching either the diesel or gas engine dynamics.

- Set S1 to the OFF position for diesel engine applications.
- Set S1 to the ON position for gas/gasoline engine applications.

5.3.2 Two actuator selections, so the same controller can be used on the DYNA 8000, DYNA 8200 or DYNA 8400 actuator.*****

- Set S2 to the OFF position when using a DYNA 8000 actuator.
- Set S2 to the ON position when using a DYNA 8200 or DYNA 8400 actuator.

5.4. GENERAL INFORMATION ON S1 AND S2

- Switch S1 selects one of two integrating rate ranges. The diesel version integrates at twice the rate of the gas version
- Switch S2 selects the point at which actuator coil current level causes the integrator limit to be actuated. This level is nominally 6.3 amperes for the DYNA 8000 and 7.3 amperes for the DYNA 8200 and 8400 actuator.

***** DYNA 8000 -- DYNC 11020 Series
DYNA 8200 -- DYNC 12000 Series
DYNA 8400 -- DYNC 14800 Series

These actuators do not have a potentiometer feedback transducer.

NOTE

For some diesel engines, better operation may be obtained by placing SW1 in "ON" position. If difficulty is experienced in "OFF" position, try SW1 ON and recalibrate.

5.5 PROPER PROCEDURES FOR SETTING SWITCHES S1 AND S2

Question: How do I know if the switches in the dual-in-line packages are correctly set as far as being in the OFF position or the ON position?

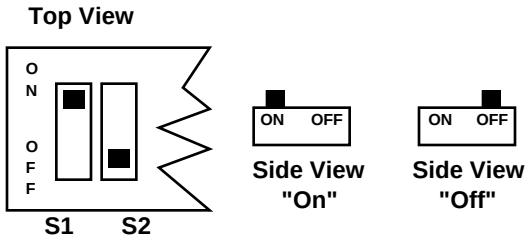

Answer: The drawings above should clarify any confusion about switch settings. The easiest way to set the switches is to apply pressure with a small pointed object until the switch clicks into position.

CAUTION

As a safety measure, the engine should be equipped with an independent overspeed shutdown device in the event of failure which may render the governor inoperative.

6. CALIBRATION PROCEDURE FOR 8000 GOVERNOR CONTROLLER — DYN1-10682, 10683, 10684, 10686

Part Number	Input Signal Frequency Maximum
DYN1-10682-000-0-12/24 DYN1-10682-001-0-12/24*	250 to 1200 Hz
DYN1-10683-000-0-12/24 DYN1-10683-001-0-12/24*	1200 to 2500 Hz
DYN1-10684-000-0-12/24 DYN1-10684-001-0-12/24*	2500 to 5000 Hz
DYN1-10686-000-0-12/24 DYN1-10686-001-0-12/24*	5000 to 9000 Hz

* CE

NOTE

See Step 6.4 for proper procedures for setting switches S1 and S2, if you have a controller that has the two switches located on top of the controller.

6.1 CALIBRATION PROCEDURE

6.1.1 Observe that potentiometer settings are adjustable from zero to 100%. Each small division is 10%. The speed potentiometer is 10K, 20 turn.

6.1.2 Set the small dip switch, S1, for the correct engine. (See paragraph 6.4) Set switch S2 in the "OFF" position for actuator DYNA 8000 or in the "ON" position for DYNA 8200 and 8400.

6.1.3 If a remote speed potentiometer is used for narrow range, set to mid range.

6.2 INITIAL POTENTIOMETER SETTINGS

GAIN	20%
I	20%
D	30%
DROOP	Zero

6.2.1 For isochronous operation, set DROOP counterclockwise to minimum position as shown in paragraphs 3.5 and 3.6.

6.2.2 For DROOP operation, set DROOP potentiometer clockwise to obtain desired amount of DROOP from no-load to full load. Turning potentiometer clockwise increases DROOP.

6.3 START ENGINE (NO LOAD)

6.3.1 Adjust the controller speed potentiometer for desired engine speed.

6.3.2 Adjust the GAIN potentiometer clockwise until the engine begins to hunt. (If the engine remains stable at 100% GAIN, physically disrupt the actuator linkage by hand.) With the engine hunting, turn the GAIN potentiometer counterclockwise until stable.

6.3.3 Repeat step 6.3.2 for the "D" setting.

6.3.4 Repeat step 6.3.2 for the "I" setting.

6.3.5 After calibration, it may be necessary to readjust the speed.

6.3.6 Following the above calibration, conduct the following test. With the engine operating at rated speed, turn the electric governor off. When engine speed slows to approximately half of rated speed, turn the electric governor back on. Observe the overshoot. If there is a small hunt at steady state, slightly turn the "I" potentiometer counterclockwise until stable. In some cases, 2 to 3 Hz overshoot may be acceptable.

WARNING

For gas engines, make certain that method used does not put gas in exhaust which might result in an explosion.

If possible, operate the unit through various load ranges up to 100% to ensure stability.

6.4 CONTROLLERS HAVE SWITCHES S1 AND S2

These units have two new features now added to the DYN1 1068X series controllers. They are:

6.4.1 Two response ranges for matching either the diesel or gas engine dynamics.

- Set S1 to the OFF position for diesel engine applications.
- Set S1 to the ON position for gas/gasoline engine applications.

6.4.2 Two actuator selections, so the same controller can be used on the DYNA 8000, DYNA 8200 or DYNA 8400 actuator.*

- Set S2 to the OFF position when using a DYNA 8000 actuator.
- Set S2 to the ON position when using a DYNA 8200 or DYNA 8400 actuator.

6.5 GENERAL INFORMATION ON S1 AND S2

- Switch S1 selects one of two integrating rate ranges. The diesel version integrates at twice the rate of the gas version.

- Switch S2 selects the point at which actuator coil current level causes the integrator limit to be actuated. This level is nominally 6.3 amperes for the DYNA 8000 and 7.3 amperes for the DYNA 8200 and 8400 actuator.

6.6 PROPER PROCEDURES FOR SETTING SWITCHES S1 AND S2

Question: How do I know if the switches in the dual-in-line packages are correctly set as far as being in the OFF position or the ON position?

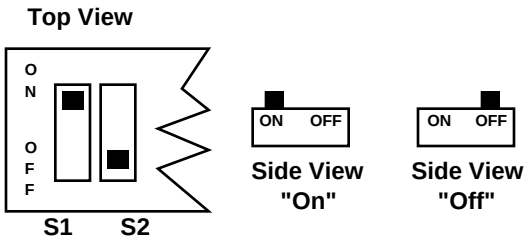

Answer: The drawings above should clarify any confusion about switch settings. The easiest way to set the switches is to apply pressure with a small pointed object until the switch clicks into position.

***** DYNA 8000 -- DYNC 11020 Series
DYNA 8200 -- DYNC 12000 Series
DYNA 8400 -- DYNC 14800 Series

These actuators do not have a potentiometer feedback transducer.

NOTE

A warm engine is normally more stable than a cold one. If the governor is adjusted on a warm engine, turn the adjustment potentiometers counterclockwise 5% (1/2 div.) to ensure a stable engine when started cold.

CAUTION

As a safety measure, the engine should be equipped with an independent overspeed shutdown device in the event of failure which may render the governor inoperative.

7. DYNA 8000 SERIES TROUBLESHOOTING CHART

7.1 PROBLEM: GOVERNOR IS COMPLETELY DEAD AND ACTUATOR LEVER STAYS AT MINIMUM POSITION WHEN POWER IS APPLIED TO GOVERNOR.

	Means of Detection	Corrective Action
7.1.1	Check battery voltage at terminals 1 and 2 on controller. Terminal 1 is positive.	Check battery connections and contacts for turning power ON to the controller.
7.1.2	Check for proper linkage setup.	Correct and free linkage.
7.1.3	Magnetic pickup signal absent or too low. Measure AC voltage across terminals 10 and 11 while cranking the engine. Voltage should be min. 2.5 VAC. **Note:** The voltmeter should have an impedance of 5000 ohms/volts or higher.	Check pole tip gap over gear tooth. Should be .037 mm ±0.127 mm (0.015" ±0.005").
7.1.4	Measure the resistance of the magnetic pickup coil. This should be above 150 ohms.	If there is an open or shorted coil, replace the magnetic pickup.
7.1.5	Measure the resistance of each pin to the metal case of the magnetic pickup. No continuity should be evident.	If there is continuity to case, replace the magnetic pickup.
7.1.6	DC SUPPLY OFF. Place an insulated jumper between terminals 2 and 3 (TP1 & TP2). With DC ON, the actuator should go to full stroke. DC voltage at terminals 4 and 5 should be within 3 volts of the supply.	If the actuator still does not move to full stroke, continue with steps below.
7.1.7	Measure actuator coil resistance: <u>DYNA 8000</u> 12 VDC unit. Coil resistance 0.75 ±0.2 ohms. 24 VDC unit. Coil resistance 2.3 ±0.4 ohms. <u>DYNA 8200</u> 12 VDC unit. Coil resistance .710 ±0.2 ohms. 24 VDC unit. Coil resistance 1.600 ±0.4 ohms. <u>DYNA 8400</u> 24 VDC unit. Coil resistance 1.630 ±0.4 ohms.	If actuator coil is open or shorted to case, replace actuator. If governor still does not operate, continue with steps below.
7.1.8	Measuring the resistance of each coil lead to the actuator case should indicate an open circuit on a low scale of the ohm meter.	If continuity is detected, replace the actuator.
7.1.9	With the DC to the governor ON and the engine OFF, measure the DC voltage from terminal 6 (+) to terminal 2 (-). This should be approx. 8 VDC.	If 8 VDC is not present, replace the controller.
7.1.10	Between terminal 7 (+) to terminal 2 (-), the voltage should be approx. 4 VDC.	If 4 VDC is not present, replace the controller.

7.2 PROBLEM: ACTUATOR GOES TO FULL STROKE WHEN DC POWER IS TURNED ON (ENGINE IS NOT OPERATING).

	Means of Detection	Corrective Action
7.2.1	Check magnetic pickup leads for proper shielded wire or open shield.	Verify and correct wiring as necessary**.**
7.2.2	Be sure there is no jumper between terminals 2 and 3.	Verify and correct wiring as necessary.
7.2.3	Failsafe circuit in the controller may be damaged or defective.	Replace controller.
7.2.4	With DC power OFF remove leads at actuator. Check continuity of each terminal to case. There should be no continuity between any terminal and case of the controller.	If continuity is detected, replace the controller.
7.2.5	If remote speed potentiometer has been connected to terminals 6, 7 and 9 of the controller, DISCONNECT THESE LEADS.	Turn DC power ON to the governor if the actuator is now normal. Proceed to step 7.3.1.

7.3 PROBLEM: IMPROPER OPERATION FROM REMOTE SPEED POTENTIOMETER

	Means of Detection	Corrective Action
7.3.1	Investigate wiring to remote speed potentiometer for open or shorted circuits.	Check wiring.
7.3.2	If the leads at terminals 6 and 7 to the remote speed potentiometer are reversed, speed control by the remote speed potentiometer will be reversed.	Correct wiring.
7.3.3	Lead wire to remote speed setting potentiometer should be 3-wire shielded cable.	Verify that the drain shield wire is isolated from ground at the potentiometer.
7.3.4	If terminal 7 lead to the remote speed potentiometer is open, engine speed will go high.	Correct the wiring.
7.3.5	If lead 9 (wiper lead to remote potentiometer) is open, there will be no control by the remote speed potentiometer.	Verify and correct wiring.
7.3.6	If lead 6 to the clockwise terminal of the remote speed potentiometer is open, speed will remain at the value set in the controller.	

7.4 PROBLEM: ERRATIC GOVERNOR OPERATION

	Means of Detection	Corrective Action
7.4.1	Measure DC voltage at 1 and 2 on controller terminal strip. Normal battery voltage should be indicated.	If nominal voltage is present, wiring is correct.
7.4.2	Low battery voltage 20% below rated can cause erratic operation.	Check battery and charging system.
7.4.3	RFI noise due to incorrect shielding.	Correct wiring.
7.4.4	RFI noise fed through power supply leads.	Connect power leads directly to the battery.

7.5 PROBLEM: SLOW, SMALL AMPLITUDE HUNTING OF SPEED OR FREQUENCY

	Means of Detection	Corrective Action
7.5.1	Sticking or very loose linkage.	Correct Linkage.

7.6 PROBLEM: FAST OSCILLATION OF GOVERNOR LINKAGE

	Means of Detection	Corrective Action
7.6.1	Verify calibration settings of the controller.	Readjust settings as necessary.

7.7 PROBLEM: ENGINE WILL NOT START -- ACTUATOR GOES TO FULL FUEL DURING CRANKING

	Means of Detection	Corrective Action
7.7.1	Make sure fuel is available.	Check fuel to engine. Check for correct wiring to the automatic shutdown circuits.
7.7.2	Air may be trapped in fuel line.	Check fuel lines for leaks.
7.7.3	Try to operate engine manually.	

8. ACTUATOR INSTALLATION DIMENSIONS

DYNC-11020-000 STANDARD ACTUATOR — CLOCKWISE ROTATION

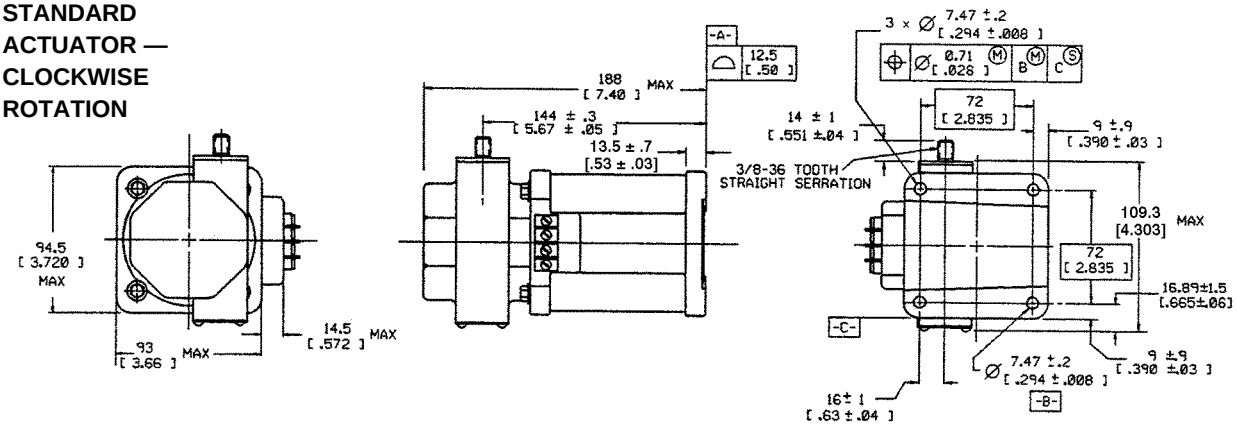

DYNC-11020-300 SIDE MOUNTED ACTUATOR — CLOCKWISE ROTATION

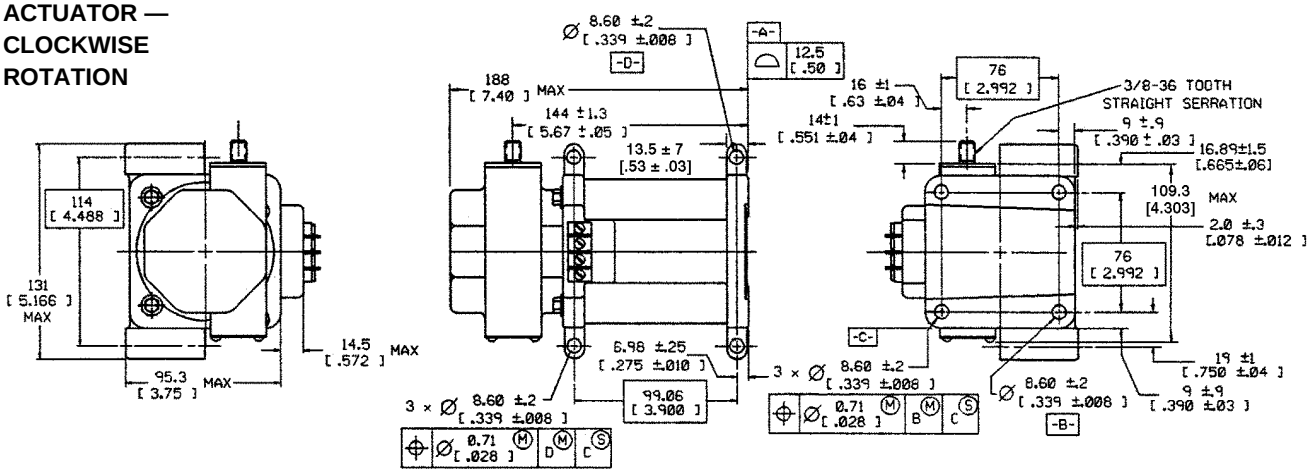

DYNC-11024-000

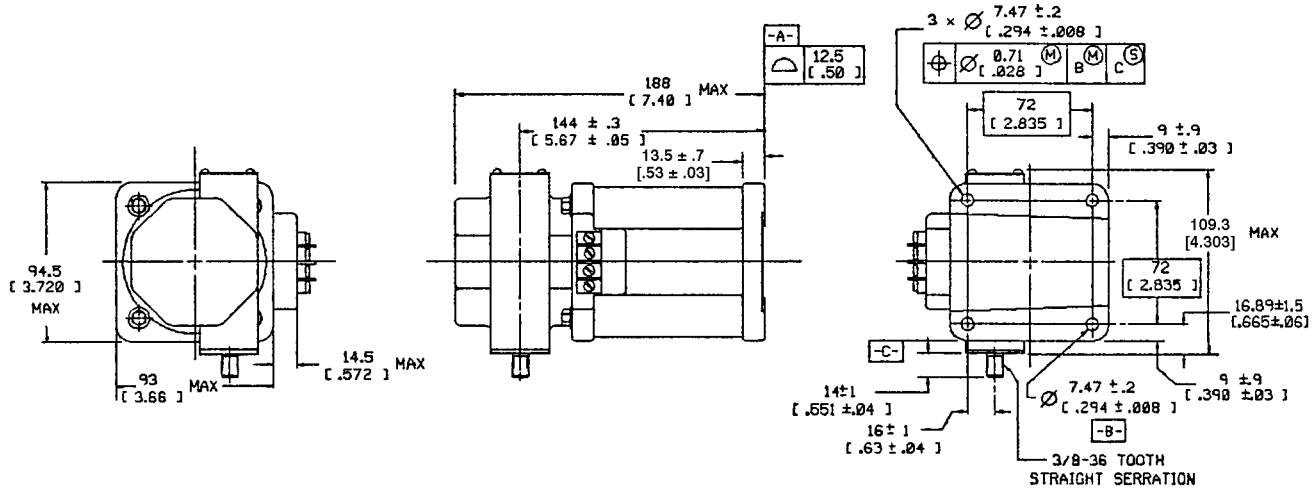

DYNC-11024-300 SIDE MOUNTED ACTUATOR — COUNTERCLOCKWISE ROTATION

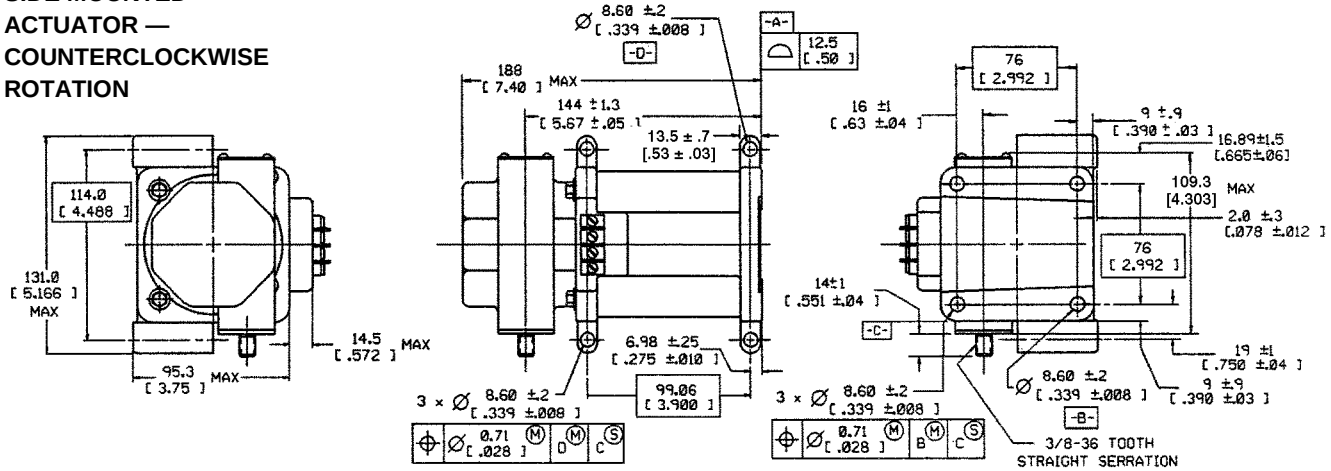

DYNC-12000-000

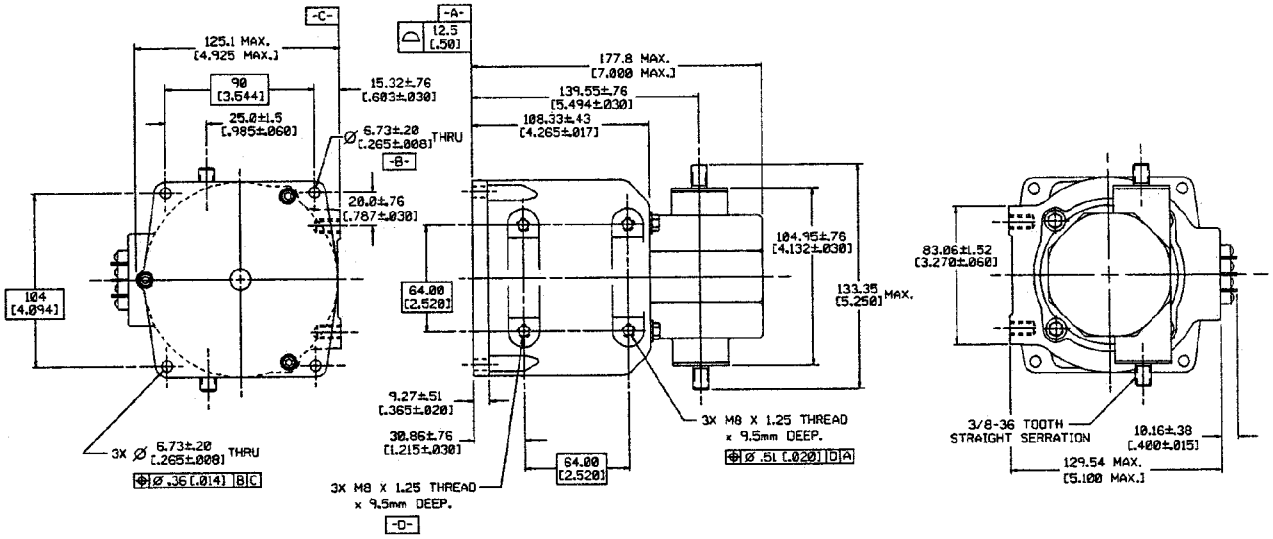

DYNC-14800-000
TERMINAL STRIP CONNECTION

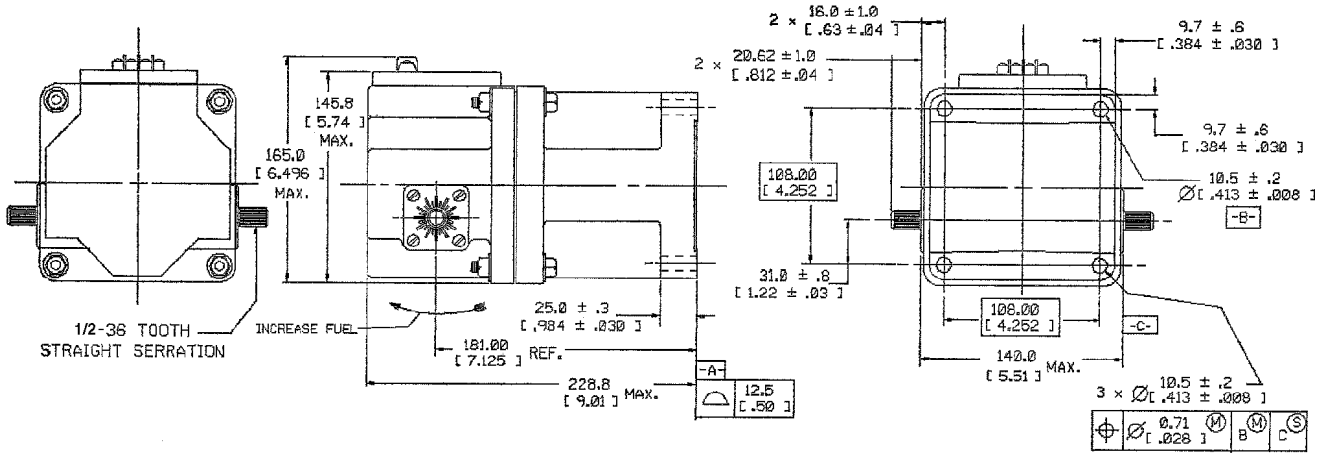

DYNC-14801-000
2-PIN MS CONNECTOR CONNECTION

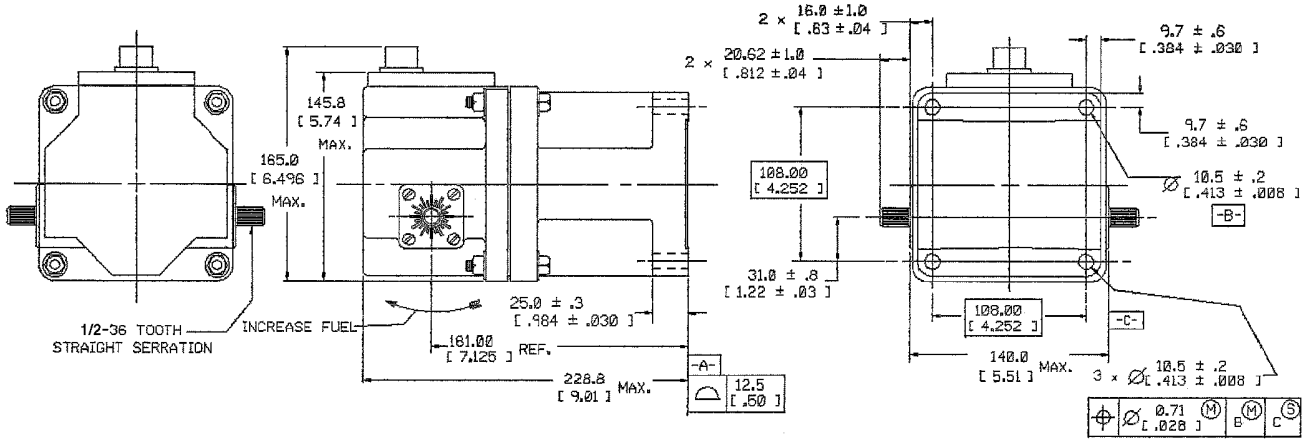

DYNC-11020-401
UL APPROVAL, HAZARDOUS DUTY, CLASS 1, DIVISION 2, GROUP D
CLOCKWISE UNIT

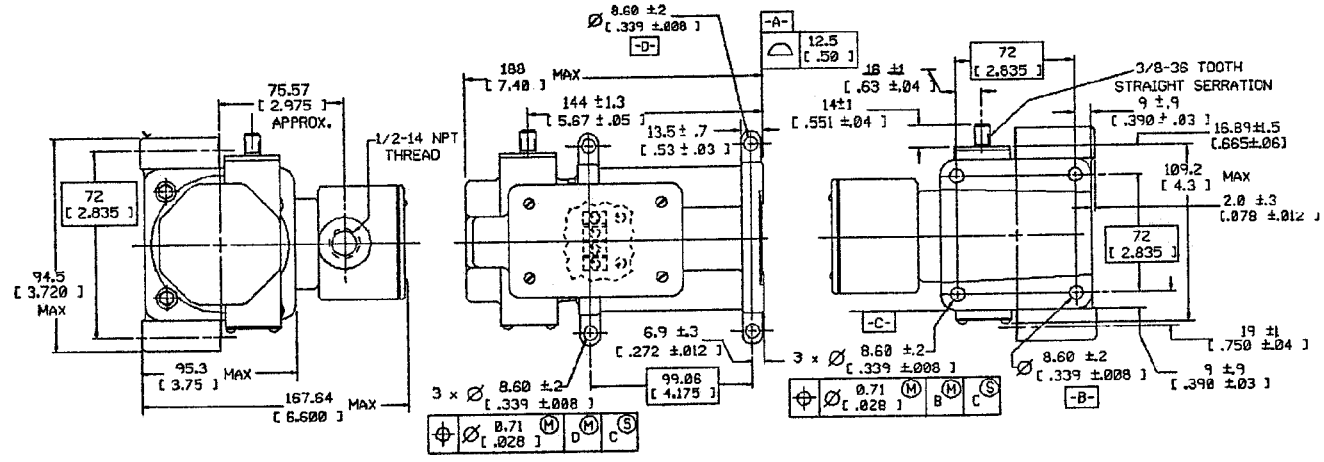

DYNC-11024-400
UL APPROVAL, HAZARDOUS DUTY, CLASS 1, DIVISION 2, GROUP D
COUNTERCLOCKWISE UNIT

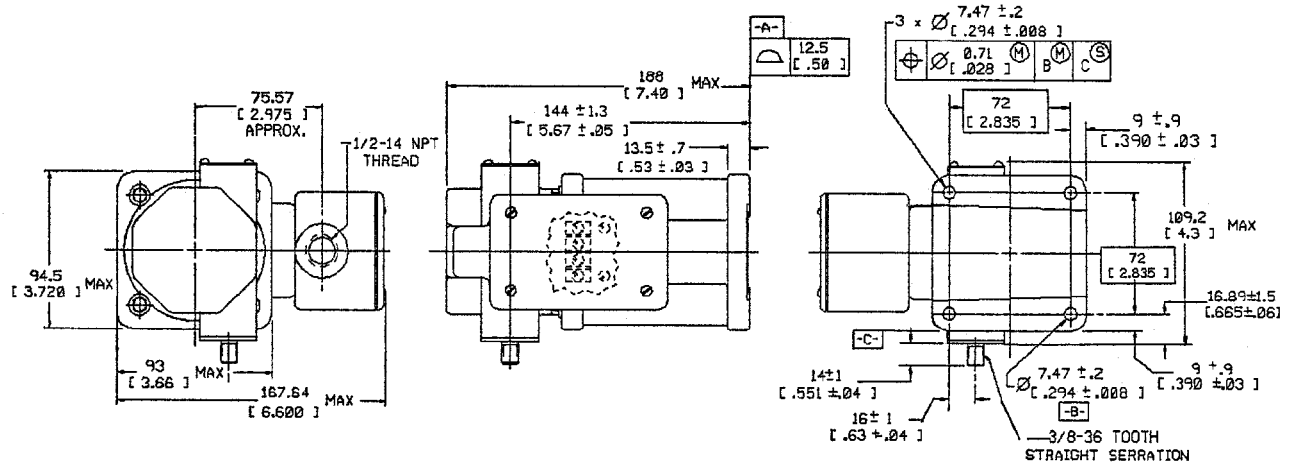

DYNC-14800-400
UL APPROVAL, HAZARDOUS DUTY, CLASS 1, DIVISION 2, GROUP D

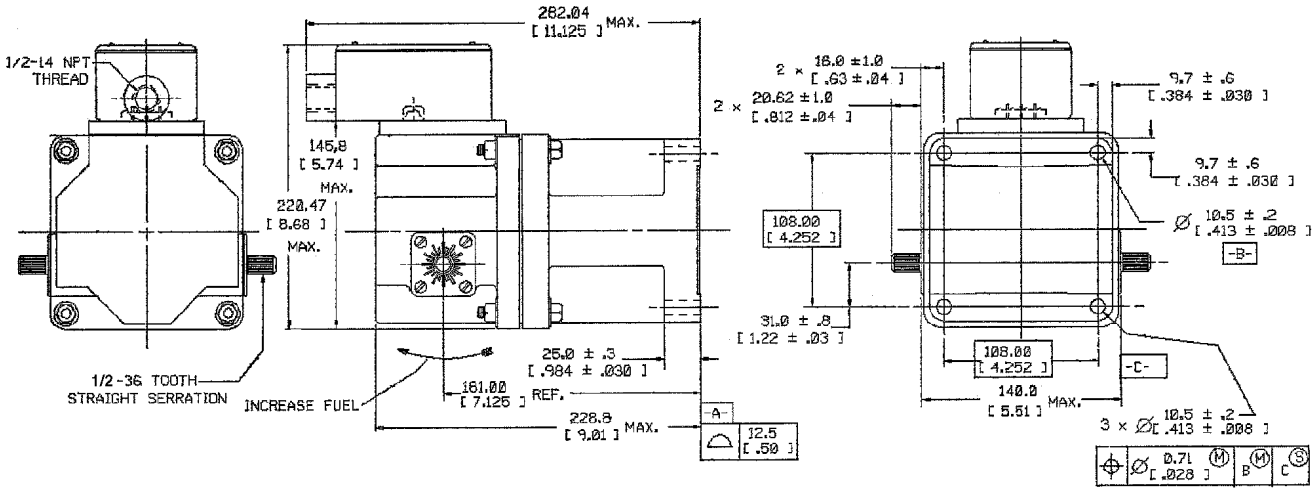

Barber-Colman DYNA Products
1354 Clifford Avenue (Zip 61111) Telephone (815) 637-3000
P.O. Box 2940 Facsimile (815) 877-0150
Loves Park, IL 61132-2940 www.dynaproducts.com
United States of America

In Europe contact: Barber-Colman GmbH
Am Neuen Rheinhafen 4, D-67346 Speyer, Germany
Telephone (49) 6232 29903, Facsimile (49) 6232 299155

In Japan contact: Ranco Japan Ltd.
Shiozaki Bldg. 7-1, 2-chome, Hirakawa-Cho, Chiyoda-Ku
Tokyo 102, Japan
Telephone (81) 3 3261 4293, Facsimile (81) 3 3264 4691

DYNA I Smoke Limit Controller

General

The Barber-Colman DYNA I Controller provides smoke control on start up for diesel engines using the DYNA 8000 or 8200 electric actuator.(Model DYN1-10695 is used only with the DYNA 8400 actuator.) These controllers provide isochronous or droop speed control with both adjustable start up fuel limit and ramp time.

The controller's electronics are heavily conformal coated, protecting against moisture and vibrations associated with engines. It is easy to adjust, having only SPEED, GAIN and combination INTEGRAL and DERIVATIVE. The power for the governor is obtained from the engine's DC starting system, eliminating the need for mechanical drives and hydraulic lines. Neither the start up fuel limit or ramp need any external signal for initializing the smoke limit function.

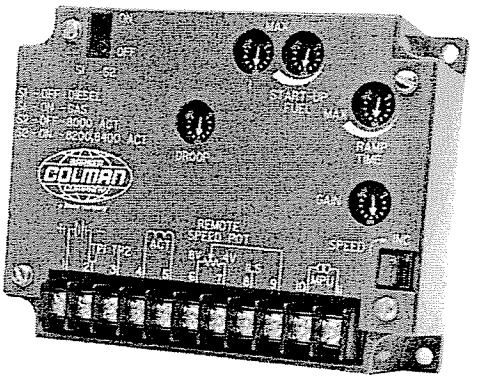

Standard Features

- All electric
- All engine compatible — diesel and gas
- Generator paralleling compatibility
- Temperature stable
- Remote speed adjustable
- High reliability
- Mounts in any position

Typical Applications

- Speed Governing
- Generator Sets
- Compressors
- Power Carts
- Pump Sets

Actuator Compatibility

- DYNA 8000 and 8200
- DYNA 8400 (For use with DYN1-10695 only)

Failsafe

The DYNA Governor has an internal FAILSAFE circuit that instantly reacts to:

- Interruption of the DC power to spring return actuator to minimum fuel position.
- Loss of speed reference signal to remove power from actuator causing it to spring return to minimum fuel position.

Speed Sensing

The DYNA all-electric governor requires a frequency signal to read engine speed. Typically, a hole is drilled and tapped in the flywheel housing perpendicular to the crankshaft, and a magnetic pickup is inserted into it to sense the teeth on the ring gear. Minimum input signal is 2.5 volt AC RMS.

Input Signal Frequency

$$\text{Input Signal Frequency in Hertz} = \frac{\text{Engine RPM} \times \text{Number of Gear Teeth on Flywheel}}{\text{60 Seconds}}$$

Select controller for the correct input signal frequency range generated by the magnetic pickup at the maximum engine operated (RPM) speed, as listed below.

Available Models	Input Signal Frequency
DYN1-10693-001-0-12/24	1200 to 2500 Hz
DYN1-10693-002-0-12/24*	1200 to 2500 Hz
DYN1-10694-001-0-12/24	2500 to 5000 Hz
DYN1-10694-002-0-12/24*	2500 to 5000 Hz
DYN1-10695-000-0-12*	2500 to 5000 Hz

*CE

Control Box Specifications

Operating Voltages: 12 or 24 volts, ± 20%

Steady State Speed Band Capability: ± 0.25%

Ambient Operating Temperature: -40°F to +180°F (-40°C to +85°C)

Temperature Stability: Better than ± 0.5% over temperatures of -40°F to +167°F (-40°C to +75°C)

Mechanical Vibration: Withstands the following vibration without failure or degraded performance: 0.06 inch double amplitude at 5 to 18 Hz; 1 G at 18 to 30 Hz; 0.02 inch double amplitude at 30 to 48 Hz; 2.5 G's at 48 to 70 Hz.

Output Signal: PWM current to 15 amp max

Connection: Terminal strip

Circuit Boards: Heavy conformal coating for moisture and vibration protection

Enclosure: Die cast aluminum

Weight: 1.36 lbs. (.62 kg)

Control Box Adjustments

Speed Setting: 20 turn potentiometer

Gain: Single turn potentiometer

Integral/Derivative: Single turn potentiometer

Droop: Single turn potentiometer approx. 0 to 15%

Start-up Fuel Limit: Single turn potentiometer

Ramp Time: Single turn 0 to 10 seconds

Fuel Selection: Diesel or gas

Actuator Selection:

- DYNA 8000 and 8200
- DYNA 8400 (For use with the DYN1-10695 only)

Smoke Limiting Features

Barber-Colman's start-up Smoke Limit Controller has two features for smoke limiting:

1. Restrictive Fuel Limiting

The start-up fuel limit potentiometer will allow the operator to set a specific fuel limit on start-up. This fuel limit will be held until the engine obtains 90% of set speed.

Fuel limit is set by cranking the engine and turning the fuel limit potentiometer clockwise (CW) until the engine starts. After engine starts, turn potentiometer an additional 3 to 5% to ensure positive starts.

2. Fuel Ramp

On warm or hot engines, a specific fuel limit setting will control start-up smoke, but not completely. A warm or hot engine does not need the same fuel limit to start as a cold engine does.

To reduce smoke even further on start-up for a warm or hot engine, a specific ramp time can be set. Ramp time can be set from 0 to 10 seconds. The ramp time starts from release of the failsafe, allowing fuel setting to increase over the selected ramp time.

Installation Dimensions — DYN1 10694

(For reference only)

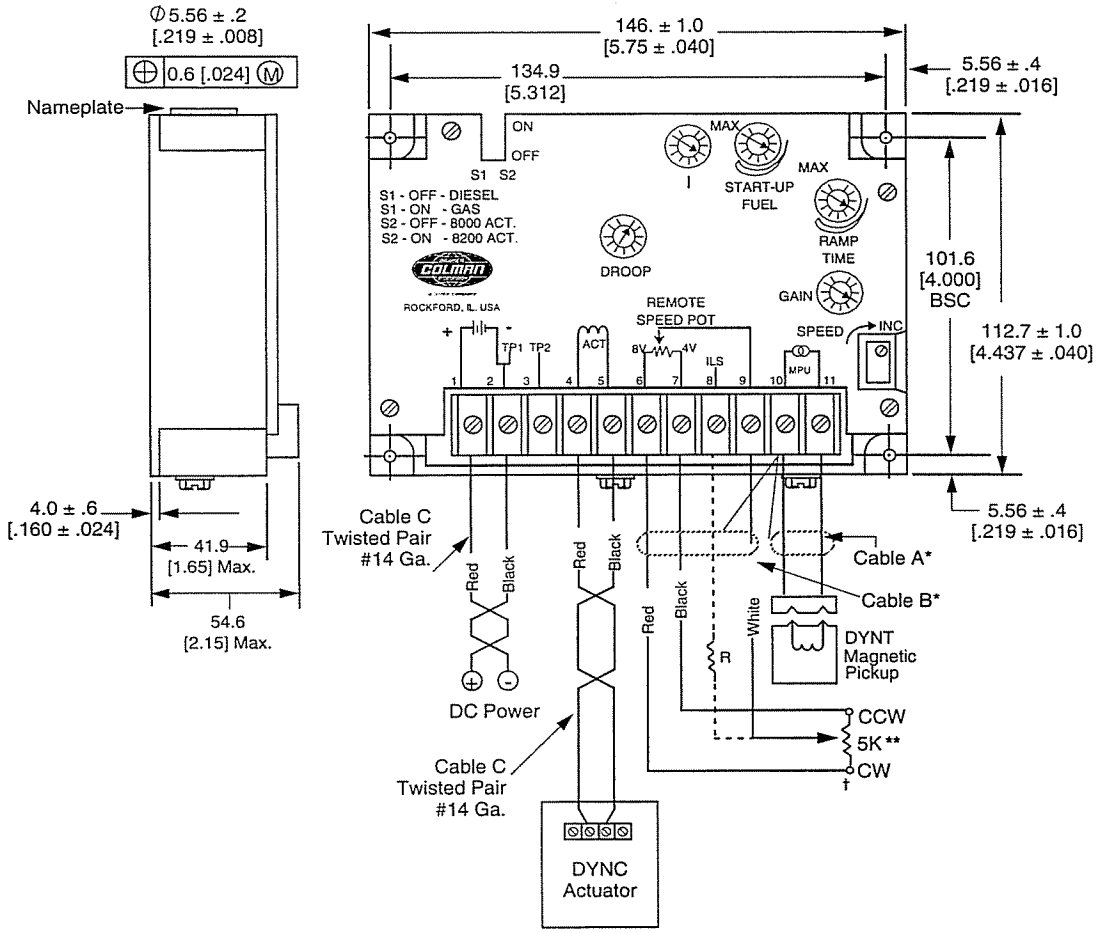

Dimensions in mm
Inches in brackets [ ]

NOTE: Wiring Diagram for CE Controllers on page 4

Cable A — DYNK 44-XX (Specify length)
(90° Connector)
Cable B — E26-22 (Specify length)
Cable C — DYNZ-70-4 (Specify length)

* Shielded Cable — Should be purchased from Barber-Colman or customer should purchase a cable with a wrapped mylar supported aluminum foil shield with a drain wire.

** Remote Speed Potentiometer — DYNS 10000

† The 5K Remote Speed Potentiometer can be wired two different ways:

1. As shown by the solid line from the wiper of the 5K potentiometer and then connected to terminal 9 (no resistor required). Adjustable range is approximately ± 5% at 1800 RPM.

2. As shown by the dashed line from the wiper of the 5K potentiometer through resistor "R" and then connected to terminal 8. Reducing the value of "R" increases the remote adjustable speed range.

Wiring Diagram For CE Controllers

DYN1-10693-002-0-12/24
DYN1-10694-002-0-12/24
DYN1-10695-000-0-12

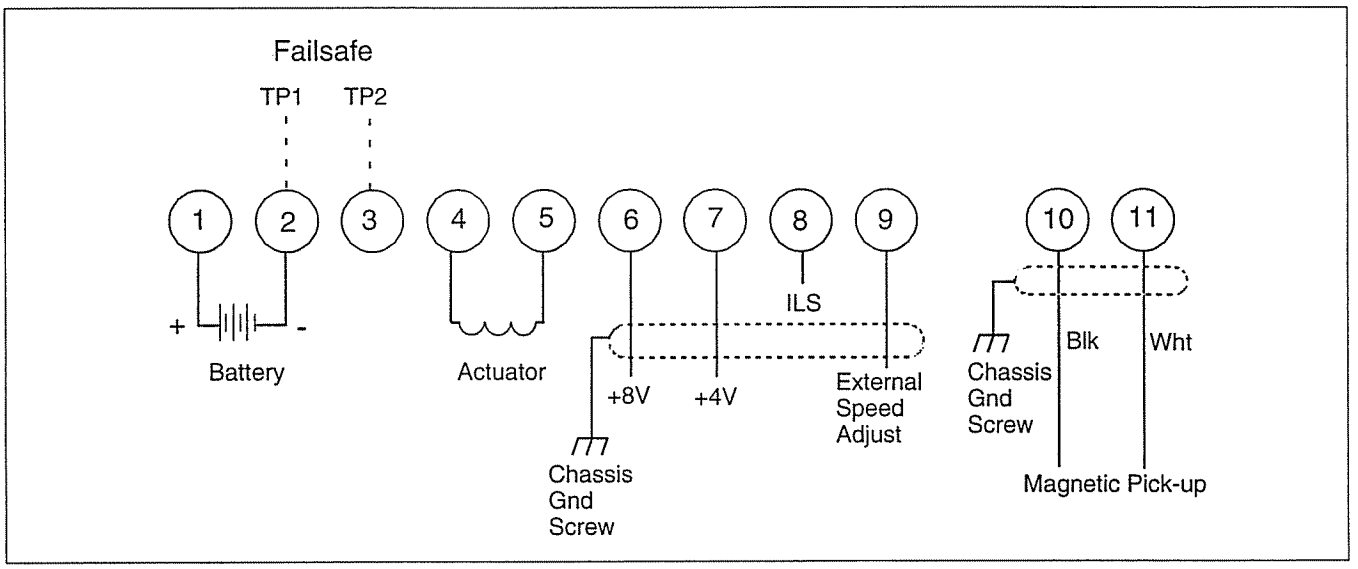

— NOTE —

Barber-Colman believes that all information provided herein is correct and reliable and reserves the right to update at any time. Barber-Colman does not assume any responsibility for its use unless otherwise expressly undertaken.

— CAUTION —

As a safety measure, the engine should be equipped with an independent overspeed shutdown device in the event of failure which may render the governor inoperative.

Barber-Colman Company

AEROSPACE & POWER CONTROLS DIVISION
DYNA Product Group

1354 Clifford Avenue
P.O. Box 2940
Loves Park, IL U.S.A. 61132-2940

Phone: (815) 637-3000
Fax: (815) 877-0150

In Europe contact: Barber-Colman GmbH
Am neuen Rheinhafen 4, D-6720 Speyer, West Germany
Tel: 06232-1203, Fax: 06232-12155, Telex: 467 627

In Japan contact: Ranco Japan Ltd.
Shiozaki Bldg. 7-1, 2-chome, Hirakawa-Cho, Chiyoda-Ku
Tokyo 102, Japan
Tel: 3261-4293, Fax: 3264-4691, Telex: 0232-2087

DYNA Power Control Manual For Plus 1, Plus 2, Plus 4 and Plus 6 Ft. Lb. Systems

Uncontrolled Document
For Historical Reference Only

General Information..... 2

Installation 3

Calibration and Adjustments..... 5

Maintenance Troubleshooting 6

Plus 1 & Plus 4 Wiring Diagram ..... 10 and 11

Plus 2 Wiring Diagram..... 12 and 13

Plus 6 Wiring Diagrams..... 14 and 15

GENERAL INFORMATION

1. SCOPE. This manual provides information for the installation, calibration, operation, and maintenance of the DYNA system. One +1, +2, +4 or + 6 actuator and one electronic control box comprise the DYNA system.

This system is manufactured by the Power Controls Division of the Barber-Colman Company which is headquartered at 1354 Clifford Avenue, P.O. Box 2940, Loves Park, Illinois 61132-2940

2. INTRODUCTION. This manual describes the basic operation and installation of the DYNA plus 1, plus 2, plus 4, and plus 6 all-electric governor systems. The basic governor assembly consists of an actuator and controller. The units are electrically coupled together to make a complete governor system offering optimum engine control.

A typical system would also have an on-off switch, a magnetic pickup and a remote speed potentiometer. The magnetic pickup detects engine speed (RPM) from gear teeth on the prime mover. This signal along with the remote speed signal and the D C power are brought into the controller for processing to allow for optimum engine control.

No special mounting requirements are needed for the DYNA actuator mounted on the engine and it can be located at any convenient position since there are no requirements for a mechanical drive or oil connections.

3. ELECTRONIC CONTROL BOX. The electronic control box is a rugged container which houses the electrical components used in controlling the actuator output and finally the engine. The components and container are designed to withstand 20 G's of mechanical vibration through 500 Hz. This control box is mounted directly on the actuator and is electrically connected to the actuator through a 5 pin connector

The electronic control box receives electrical input signals from both the magnetic speed sensor and the reference speed pot. These signals are processed and compared, resulting in an error signal that is amplified and sent to the actuator in a proportional, integral and derivative summation. When the actuator receives the desired output shaft electrical signal, the output shaft rotates and a feedback is sent back and compared to the desired signal and any difference is transmitted to the power amplifier which sends corrective action to the output shaft position.

4. JUNCTION BOX. An optional junction box can be used to house the reference speed potentiometer and the power switch. It is mounted so that it can be conveniently connected to the electronic control box, power source, and magnetic speed sensor.

5. MAGNETIC SPEED SENSOR. The magnetic speed sensor is mounted in a convenient location, i.e.: flywheel housing, such as to generate electrical pulses proportional to speed by sensing magnetic material, i.e.: teeth on the engine ring gear passing the sensor.

6. ACTUATORS. The actuators are electrically connected to the electronic control box and their mechanical output is connected to the engine's fuel system. Actuators are electrically powered and have output work capacities of 1, 2, 4, and 6 ft-lbs. The actuators convert an electrical input to an angular mechanical output at the output shaft which has a maximum rotation of 45°.

Uncontrolled Document
For Historical Reference Only

DYNA Controller Inputs

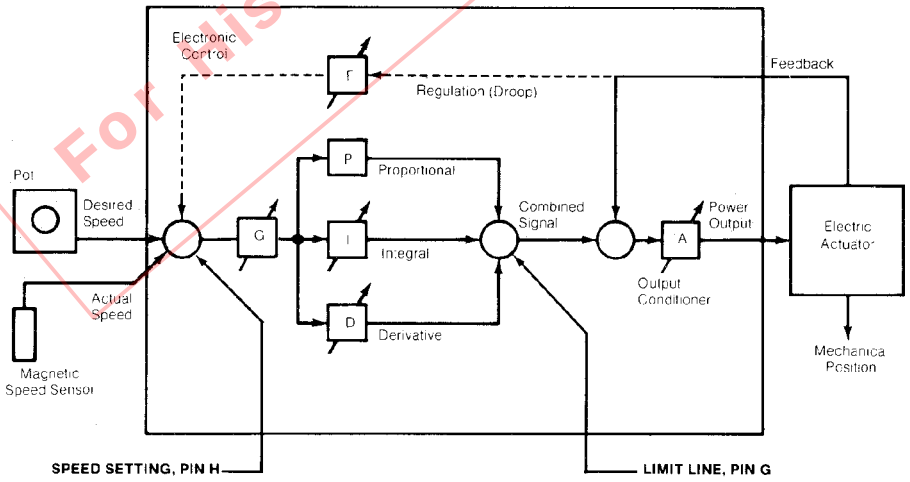

Modify speed with respect to:
Remote Speed Setting
Time (Ramp Generator)
Electrical Load Change (Load Pulse)
Electrical Load (Isochronous Load Sharing)
Electrical Phase Angle (Synchronizer)

On Pump Applications:
Output Pressure
Output Temperature
Liquid Level
(Controller Recorder Output)

Limit fuel (rack or throttle position) with respect to:
Maximum Fuel Permitted (Load Limit)
Temperature (Exhaust)
Manifold Pressure (Smoke Limit)
Oil Pressure
Time (Some ramp generator applications)
Requested Speed (Torque Limit)
Actual Speed (Torque Limit)

INSTALLATION INFORMATION

1. ACTUATOR AND ELECTRONIC ASSEMBLY. The actuator and electronic assembly can be installed in any position by using a simple steel bracket or mounting pad. Be sure that the mechanical linkage has sufficient physical clearance to freely move from minimum to maximum fuel. The length of this linkage rod connecting the actuator output shaft to the engine fuel control should not be excessively long. Use 4" to 10" except in special cases.

NOTE

The plus 4 actuators have through output shafts that rotate CW or CCW to increase fuel. The direction of rotation is determined when the output shaft is pointed toward the observer. The minimum fuel position is obtained when power is not applied to the actuator coil.

2. MOUNTING THE ACTUATOR AND LINKAGE. Adjust the linkage rod to allow at least 40° rotation of the actuator output shaft for full travel of the fuel control. Use lock nuts on the linkage rod. See Figure 1 for typical linkage arrangements.

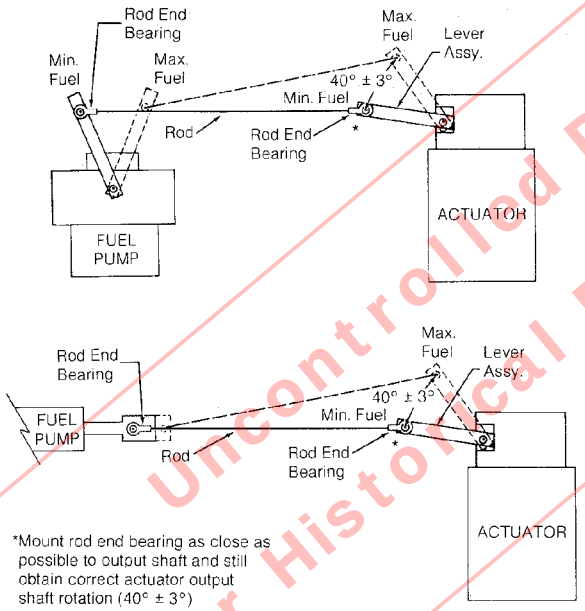

Figure 1. Typical Non-Linear Linkage Arramgements

3. INSTALLATION OF SPEED SENSOR (MAGNETIC PICKUP). Remove the inspection cover over the ring gear teeth. The teeth should be free of burrs, excessive grease or dirt.

The magnetic pickup should not be installed in inspection covers. Inspect the ring gear housing and pick a location where a 37/64" hole can be drilled such that the ring gear teeth will pass in front of the pickup pole face. After the 37/ 64" hole is drilled, use a 5/8-18 starting tap to cut threads for the magnetic pickup, then run a bottom tap through the hole.

NOTE

The hole should be drilled as nearly perpendicular as possible over the ring gear teeth, as illustrated in Figure 2

Manually rotate the ring gear until a tooth face is directly in the center of the tapped hole. Gently turn the magnetic pickup clockwise into the hole until it bottoms on the tooth, and back off 1/4 turn. Tighten the jam nut firmly.

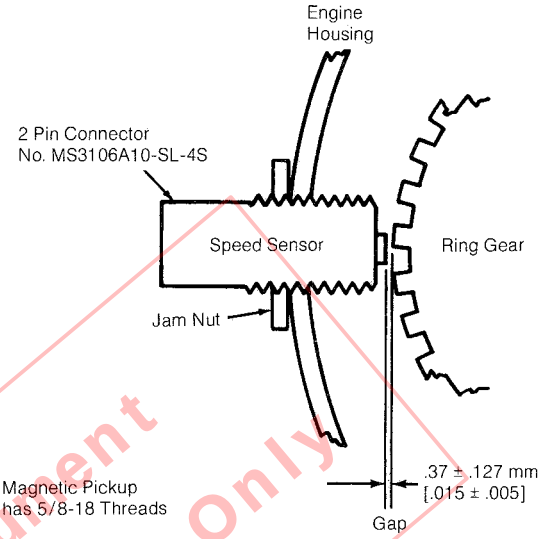

Turn in until pole face of pickup bottoms out on ring gear tooth and back out 1/4 turn and tighten jam nut.

Figure 2. Installation of Magnetic Pickup

4. INSTALLATION AND WIRING. Barber-Colman has installation kits available for many engines.These include the mounting bracket and wiring harness (Consult the Barber-Colman DYNA distributor or dealer for installation kit information.)

See the typical wiring for +1, +2, +4, or +6 DYNA governor systems shown on pages 10 through 15 of this manual

Important things to follow when making an installation.

a. Do not connect the control box connector to the wiring until proper voltage and polarity have been established.

b. Wiring.

(1) Use the recommended wiring cables shown in this manual (see pages 10 through 15).

(2) Make sure the wire insulation will withstand the temperatures around the engine.

(3) Twist power leads.

(4) Make sure the end of shield not used is taped to prevent touching other components

c. Ground Shield Installation Precautions

(1) Engines with positive ground systems. With positive ground systems the shield lead on the two- and three-lead shielded cables must not be allowed to touch the engine frame or any part of the power system which is at the same potential as the engine frame. *Allowing the shield lead to touch any of these exposed parts will cause a short across the D-C supply and could damage the control.*

Uncontrolled Document For Historical Reference Only

(2) Engines with negative ground systems. With negative ground systems the shield of the two- and three-lead shielded cables must not touch the engine frame. Letting the shield touch the engine frame or associated parts will not damage the control, but it may generate undesirable electrical signals that may cause unstable engine performance.

d. Observe the proper power supply polarity. The proper polarity to Pins A and C of the controller connector must be observed or the unit will not operate. Pin A must be connected to the positive terminal and Pin C to the negative terminal of the battery or power supply.

5. CHECKING OUT WIRING INSTALLATION.

a. After the wiring is mounted on the engine, connect the power wires; the red wire to the positive terminal, and the black wire to the negative terminal. (Do not connect power wiring to the engine frame — connect directly to the battery terminals.)

b. A voltmeter must be used at this time to check voltage at the electronic control box connector. Turn the power switch “ON” at the junction box. Connect the meter leads to Pins A and C of the connector. Pin A must be positive and Pin C negative. The meter should read rated battery voltage.

c. Place the power switch in the “OFF” position and connect the connector to the control box.

d. Remove top cover from control box.

e. Place a jumper between TP1 and TP2 (this overrides the failsafe feature).

f. Place the power switch in the “ON” position. The actuator should move to the full fuel position

g. Remove jumper between TP1 and TP2. (Actuator must return to minimum fuel position.)

h. Engine is ready to start.

CAUTION

As a safety measure, the engine should be equipped with an independent overspeed shutdown device in the event of failure which may render the governor inoperative.

6. REQUIRED TOOLS.

a. Drill Bit — 37/64" diameter for magnetic pickup.

b. Thread Tap — 5/8-18 starting tap for magnetic pick-up.

c. Thread Tap — 5/8-18 bottom tap for magnetic pick-up.

d. Soldering Iron — 50 Watt and Rosin Core Solder

e. Various — pliers, wrenches, screwdrivers, wire strippers

Uncontrolled Document
For Historical Reference Only

CALIBRATION AND ADJUSTMENTS
FOR
DYN1-10002-002, DYN1-10003-002, DYN1-10004-002, DYN1-10006-002 CONTROLLERS

DYN1-10502-001, DYN1-10503-001, DYN1-10504-001, DYN1-10506-001 CONTROLLERS

*DYN1-10502-004, *DYN1-10503-004, *DYN1-10505-004, *DYN1-10506-004 CONTROLLERS

*CE



Reference Potentiometer
Potentiometer shown in the 9 o'clock position

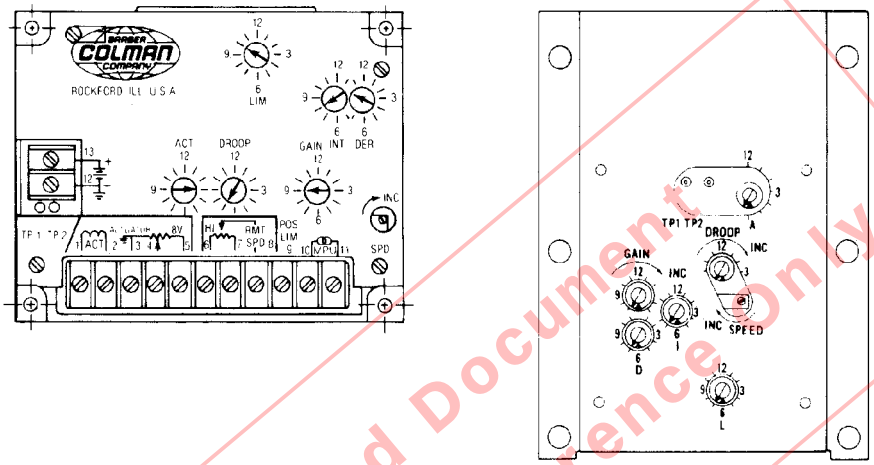

Figure 1. Electronic Control Box Adjustments Configurations

Uncontrolled Document
For Historical Reference Only

NOTE 1

See Figure 1 for a reference guide before making any adjustments of "A (ACT)", " D (DER)" "DROOP'', "GAIN", "I (INT)" or "L (LIM)" potentiometers

1. Power "OFF" — engine not operating

   a. Easier adjusting is possible by connecting an extension cable (Part No DYNZ-126) between control box and actuator.
   b. Remove top cover from control box.

CAUTION

As a safety measure, the engine should be equipped with an independent overspeed shutdown device in the event of failure which may render the governor inoperative.

2. Set potentiometers as indicated below:
   a. Set "A (ACT)" at 3 o'clock.
   b. Set "GAIN" at 9 o'clock
   c. Set "D (DER)" at 10 o'clock
   d. Set "I (INT)" at 8 o'clock.
   e. **"L (LIM)" is factory adjusted** and should be about 10 o'clock. (See Note 4.)

3. For isochronous operation, set "DROOP" potentiometer fully counterclockwise (zero droop) and proceed to Step 4. **For droop operation, set "DROOP" potentiometer to desired droop.** Refer to Note 2

NOTE 2

The amount of droop for a given setting depends on pick-up frequency and no load to full load actuator shaft rotation. A "DROOP" potentiometer setting of 9 o'clock will give about 3% droop, no load to full load, when the pick-up frequency is 4260 Hz and actuator shaft rotation is 13° from no load to full load. Lower pick-up frequency or smaller shaft rotation results in less droop.

4. If a remote speed potentiometer is used, set it to mid-range.

5. **Start engine.** Then adjust controller "SPEED (SPD)" potentiometer until engine is operating at the desired speed (RPM). (**Clockwise** increases engine speed)

6. Adjust the "A (ACT)'' potentiometer with engine **running** unloaded

   a. Turn the "A (ACT)" potentiometer **slowly clockwise** until the actuator lever oscillates (jiggles) rapidly. Turn the "A (ACT)'' potentiometer **slowly counterclockwise** until the rapid oscillation just stops.

   b. Upset governor by tapping actuator lever. If the actuator lever oscillates rapidly, turn the "A (ACT)" potentiometer **slowly counterclockwise** until the rapid oscillation just stops.

7. If governor is unstable (hunting), turn "GAIN" potentiometer **slowly counterclockwise** until it is stable. (Moving actuator lever and constant engine speed means unit is governing and not hunting.) If governor is stable, turn "GAIN" potentiometer **slowly clockwise** until governor starts to hunt, then turn "GAIN" **slowly counterclockwise** until governor is stable. Upset governor by tapping actuator lever. Engine should return quickly to its commanded speed without hunting.

8. Turn "D (DER)" **clockwise** until actuator lever begins to hunt. One may have to upset governor by tapping actuator lever, then turn "D (DER)" **slowly counterclockwise** until engine is stable. ["D (DER)" setting may be fully clockwise on some engines which have large mass in the linkage.]

NOTE 3

Step 9 must be done when engine is unloaded.

9. After "GAIN", "A (ACT)" and "D (DER)" potentiometers are set, turn power switch "OFF". Let engine speed slow down to about half speed, and then turn power switch "ON". Watch or listen to engine speed. If engine speed overshoots commanded speed, turn "I (INT)" potentiometer a **small amount** counterclockwise. Keep repeating above until engine no longer overshoots its commanded speed. [If "L (LIM)" potentiometer is set too far clockwise, engine may also overshoot commanded speed.]

10. Changing the adjustments "A (ACT)", "D (DER)", "DROOP" and "GAIN'' may cause a slight engine speed change which will require resetting the "SPEED" (SPD) adjustment.

11. **Changing droop potentiometer setting** adjustment of the "DROOP" potentiometer after the controller is calibrated ["A (ACT)" and "GAIN" settings set] may result in some instability when **large loads** are shed. Therefore, turning the "DROOP" potentiometer (clockwise) from a previous setting may cause system instability which can be improved (regained) by turning "A (ACT)" potentiometer (counterclockwise) slightly and turning "GAIN" potentiometer (clockwise) slightly.

12. If unit has a cover, place cover back onto controller to keep out dirt and moisture.

NOTE 4

Field Adjustment of "L (LIM)": "L (LIM)" is factory adjusted and is sufficient for most installations. The following method can be used for setting the "L (LIM)" potentiometer to match the governor to the linkage on installations where the engine can be fully loaded (100%).

I. After "A (ACT)", "GAIN", "D (DER)" and "I (INT)" are adjusted, load engine to 100% (full load)

   a. While observing frequency or RPM meter, turn "L (LIM)" potentiometer **slowly counterclockwise** until the frequency or RPM starts to decrease.

   b. Turn "L (LIM)" potentiometer slowly clockwise until the frequency or RPM returns to the original value before "L (LIM)'' was adjusted in Step (a) above

Uncontrolled Document
For Historical Reference Only

Table 1. Calibration and Adjustment Tips

If any of the following adjustments are tried and they are not successful, the potentiometer should be reset to its original position before going on with the calibration.

Symptom	Possible Cause	Corrective Action
Actuator lever oscillating (jiggling) at a 10 to 15 Hz rate.	"A (ACT)'' potentiometer set too far clockwise.	Turn A (ACT)" **slowly** counterclockwise.
Actuator lever oscillating (hunting) at a 4 to 10 Hz rate.	"D (DER)" potentiometer set too far clockwise.	Turn "D (DER)" **slowly** counterclockwise.
Actuator lever oscillating (hunting) at a 2 to 3 Hz rate.	"GAIN" potentiometer set too far clockwise.	Turn "GAIN" **slowly** counterclockwise.
Actuator lever has a small amplitude oscillation of less than 1 Hz rate with no quick changes in position.	"I (INT)" potentiometer set too far clockwise.	Turn "I (INT)" **slowly** counterclockwise.

GENERAL
DYNA GOVERNOR TROUBLESHOOTING

Evidence of Failure	Possible Causes	Means of Detection	Corrective Action
I	1. No DC power.	1. Measure battery or power supply voltage.	1. Change battery or replace power supply.
		2. Disconnect 10 Pin connector from controller and measure DC voltage between Pin A & Pin C on cable connector with power switch "ON". Read battery voltage. (Pin A is positive with respect to Pin C) (Not applicable on 125 VDC system)	1. Check wiring. a. Open lead to Pin A. b. Open lead to Pin C. c. Faulty power switch. d. Power leads not connected to power supply.
		3. Disconnect 3 Pin connector from actuator and measure DC voltage between Pin A & B on cable connector with power switch "ON". (This test is for the +6 actuators only)	1. Check wiring a. Open lead to Pin A. b. Open lead to Pin B. c. Faulty power switch.
	2. Sticking linkage.	1. Manually operate linkage to make sure it is not sticking.	1. Free up linkage.
	3. Indadequate power supply voltage.	1. Remove cover from the controller. Place a jumper between TP1 & TP2. Turn power switch "ON" and measure the DC voltage between Pins A & C on the 10 Pin connector. (For +6 DYNA actuators measure the DC voltage between Pins A & B on the actuator 3 Pin connector). Voltage should be 80% of nominal supply voltage for correct operation. Examples: 24 VDC SYSTEM: 24V x 0.80 = 19.2V 12 VDC SYSTEM: 12V x 0.80 = 9.6V 32 VDC SYSTEM: 32V x 0.80 = 25.6V	1. Larger supply. 2. Larger leads from supply to controller. 3. Check for poor or loose sulpply connections.
	4. No signal or a weak signal from magnetic pickup.	1. Disconnect 10 Pin connector from controller. Measure the AC voltage between Pin I & J on cable connector while cranking engine. Meter must read 2.5 volts or greater during cranking. (AC input impedance of meter must be 5000 ohms / volt or greater.) 2. Check the following: • Pickup resistance (200 ohms) • Magnetic pickup leads (Pins A & B) must be isolated from case • Loose connector • Mechanical integrity (May be damaged pole piece. Flywheel may have run out) • Water in connector • Broken leads • Shorted leads • Shield drain wire (isolated from ground) • Gap — .015 ± .005" (0.37 ± 0.127 mm) NOTE: One complete turn of the pickup is approximately 0.055".	1. Check leads I & J from 10 Pin cable connector to magnetic pickup for continuity. (See step 5 below for a short C to J on the 10 Pin connector that will cause loss of pickup signal.) 2. Check for correct installation of magnetic pickup. 3. Replace magnetic pickup if unable to obtain an output signal from unit.
	5. Short in either male or female member (10 Pin connector between Pins: C to D C to H C to E C to J C to G	1. Turn "OFF" power switch. Disconnect 10 Pin connector. a) Check cable connector for short(s) between C & D, C & E, C & G, C & H and C & J.	1. Check connector and leads for cause of short(s). Repair or replace.
		b) Check box connector for short(s) between C & D, C L& E, C & G, C & H and C & J.	1. Replace controller.
	6. Actuator failure.	1. Try different actuator.	1. Replace actuator.
		2. Remove controller from actuator. a) Measure resistance between actuator case and pins on the actuator connectors. These measurements will all indicate an open circuit on a good actuator.	1. If a short or resistance path is indicated, replace actuator.
		b) Measure the resistance between Pins D & E on actuator connector. If an open circuit is indicated, it means the actuator coil is open and the unit is faulty. (This test is for the +1 actuator only)	1. Replace actuator.
		c) Measure for shorts between Pins A to C or B to C on actuator 5 Pin connector. (A good actuator should not indicate a short circuit A to C or B to C.	1. Replace actuator.
	(CONTROLLER SHOULD BE CHECKED AT THIS TIME BECAUSE IT IS DISCONNECTED FROM ACTUATOR.)	d) Measure for open between Pins A to C on the actuator 5 Pin connector. (A good actuator will measure 4,000 to 20,000 ohms). Open lead to Pin A on actuator connector will cause unit to go to minimum fuel position.	1. Replace actuator.
		e) Measure for shorts between Pins A to C or B to C on the controller 5 Pin connector. (A good controller should not indicate a short circuit A to C or B to C).	1. Replace controller.
	7. Controller failure.	1. With power switch "ON", measure DC voltage between Pin C (-) and Pin D (+) at the controller 10 Pin connector. This voltage should be +8.0V ± 0.5 volts.	1. Replace controller.
		2. Remove cover from controller and place a jumper between TP1 & TP2. Make sure correct power is available to controller. If controller is good and correct voltage is available, the actuator output lever will go to full fuel position and remain there until jumper TP1 to TP2 is removed.	1. Replace controller if actuator checked O.K. in Step 6.

Uncontrolled Document
For Historical Reference Only

DYNA GOVERNOR TROUBLESHOOTING (Cont.)

Evidence of Failure	Possible Causes	Means of Detection	Corrective Action
II. Actuator lever to full fuel position each time power switch is turned "ON". (Engine not operating.)	1. Magnetic pickup leads not properly shielded.	1. Check for open shield lead on magnetic pickup. See wiring diagrams on Pages 10 - 15 for correct shielding.	1. Correct the wiring. The magnetic pickup shield must be tied to the controller Pin C. The other end of shield must not be tied to anything.
	2. Short between Pins B & C or C & F in either male or female member (10 Pin connector).	1. Turn "OFF" power switch. Disconnect 10 Pin connector. a. Check cable connector for short(s) between C & B or C & F. b. Check box connector for short(s) between C & B or C & F.	1. Check connector and leads for cause of short(s). Repair or replace. 1. Replace controller.
	3. Actuator failure.	1. Try another actuator.	1. Replace actuator.
		2. Measure for open between Pins A to C on the actuator 5 Pin connector. (A good actuator will measure 4,000 ohms to 20,000 ohms. Open lead to Pin C on actuator will cause unit to go to maximum fuel position.	1. Replace actuator.
	4. Controller failure.	1. Try another controller.	1. Replace controller.
		2. Make resistance check between Pins E and C on the controller 5 Pin connector. Controller must be removed from actuator. A good controller will measure approximately 360 ohms ± 20% when the plus lead of meter is connected to Pin C and minus lead is connected to Pin E. Reversing the meter leads, minus to Pin C and plus to Pin E will measure (infinity) open circuit.	1. Replace controller if a short circuit was detected between Pins E and C. 2. Replace controller if an open circuit was detected between Pins E and C with meter leads connected in both directions.
	5. Amplifier module failure. (Used on explosive proof actuator.)	1. Try another amplifier module.	1. Replace amplifier module.
II. Erratic governor operation.	1. Poor electrical connection between supply voltage and controller.	1. Measure voltage Pin A and C on the 10 Pin connector while engine is operational. Read nominal battery voltage.	1. Correct wiring.
	2. Poor electrical connection between supply voltage and the +6 actuator.	1. Measure voltage Pin A and B on the 3 Pin connector.	1. Correct wiring.
	3. Low battery supply voltage at controller.	1. Same as above.	1. Charge battery.
	4. Electrical noise (RFI) pickup due to poor shielding.	1. Observe output shaft (lever) on actuator. It will make a quick correction of fuel throttle position without a change in load.	1. Check for correct shielding.
	5. Electrical noise (RFI) fed through power supply.	1. Observe output shaft (lever) on actuator. It will make a quick correction of fuel throttle position without a change in load.	1. Check all wiring connections in system.
	6. Defective feedback potentiometer in actuator.	Check the feedback potentiometer with a 9 VDC transistor battery. Pins A, B and C of actuator 5 Pin connector. 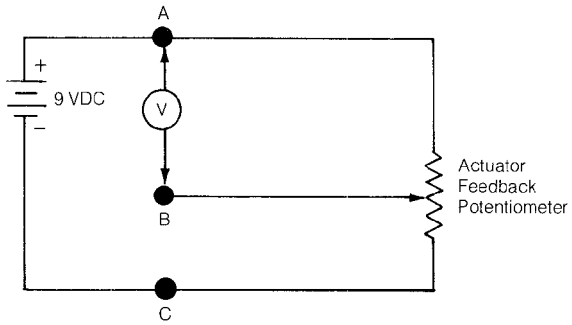 A, B and C of 5 Pin Actuator Connector	Remove control box from actuator. 1. Connect the plus of the 9 VDC battery to Pin A, and the minus to Pin C of the 5 Pin connector. Refer to drawing. 2. Connect the plus lead of the volt meter to Pin A, and the minus lead to Pin B. 3. Using a standard lever, slowly rotate the actuator output shaft to maximum while observing the volt meter. NOTE: The voltage will be at approximately 4.0 VDC initially and will increase to approximately 4.5 VDC at full stroke of the actuator. (If the voltage change is not evident or it is erratic, replace the actuator.)

Uncontrolled Document
For Historical Reference Only

DYNA GOVERNOR TROUBLESHOOTING (Cont.)

Evidence of Failure	Possible Causes	Means of Detection	Corrective Action
IV. Slow small amplitude hunting of engine RPM or generator frequency.	1. Sticking linkage or very loose linkage.	1. Fairly regular but quick changes in position of fuel rack and then it rests and moves back to original position. 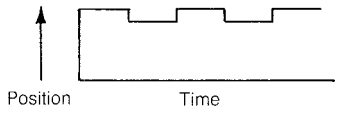	1. Correct linkage arrangement.
	2. Sticking injector(s) in fuel system pump.	1. Same as 1 above.	1. Correct fuel system.
	3. DYNA actuator (internal) problem.	1. Change actuator.	1. Replace actuator.
V. Actuator lever oscillating (hunting). (If any of these adjustments are tried and they are not successful, reset the potentiometer to its original position before going on with the troubleshooting.)	1. "A" pot set too far clockwise.	1. Actuator lever oscillating (jiggling) at a 10 to 15 Hz rate.	1. Turn "A" slowly counterclockwise.
	2. "D" pot set too far clockwise.	1. Actuator lever oscillating (hunting) at a 4 to 10 Hz rate.	1. Turn "D" slowly counterclockwise.
	3. "GAIN" pot set too far clockwise.	1. Actuator lever oscillating (hunting) at a 2 to 3 Hz rate.	1. Turn "GAIN" slowly counterclockwise.
	4. "I" pot set too far clockwise.	1. Actuator lever has a small amplitude oscillation of approximately 1 Hz with no quick changes in position.	1. Turn "I" slowly counterclockwise.
VI. Remote potentiometer adjustment has no effect on setting engine RPM.	1. Open circuit to Pins D, F or H in either male or female member of controller 10 Pin connector.	1. Turn "OFF" power switch. Disconnect 10 Pin connector. a. Check cable connector for open circuit between Pins D & F, Pins D & H, and Pins F & H.	1. Check connector, remote potentiometer and leads for cause of open circuit(s). Repair or replace faulty components.
		b. If external wiring and remote potentiometer checks out correctly, change controller.	1. Replace controller.
		2. Check the following points at the remote potentiometer. • Mechanical check • Resistance check • Wiring • Speed range resistor • Drain shield (Cut off and isolate from ground and other leads.) • Voltage check for the 4 and 8 VDC at the remote potentiometer.	1. Repair or replace faulty components.
VII. Engine operates above set speed (May overspeed.)	1. Faulty actuator. a. Short between Pins A and B of the 5 Pin actuator connector.	1. Remote controller from actuator. a. Measure for short(s) between Pin A and B on the actuator 5 Pin connector.	1. Replace actuator.
	b. Open lead to Pin C of 5 Pin connector on actuator.	b. Measure for open circuit by measuring between Pins B and C on the 5 Pin connector.	1. Replace actuator.
VIII. Engine won't start. (Actuator lever goes to full fuel position each time engine is cranked.)	1. Fuel not getting to engine.	1. Try to operate engine manually.	1. Check fuel line. 2. Check safety shutdowns.

Uncontrolled Document
For Historical Reference Only

TYPICAL WIRING DIAGRAM FOR DYN1 10504 SERIES PANEL MOUNTED CONTROLLERS

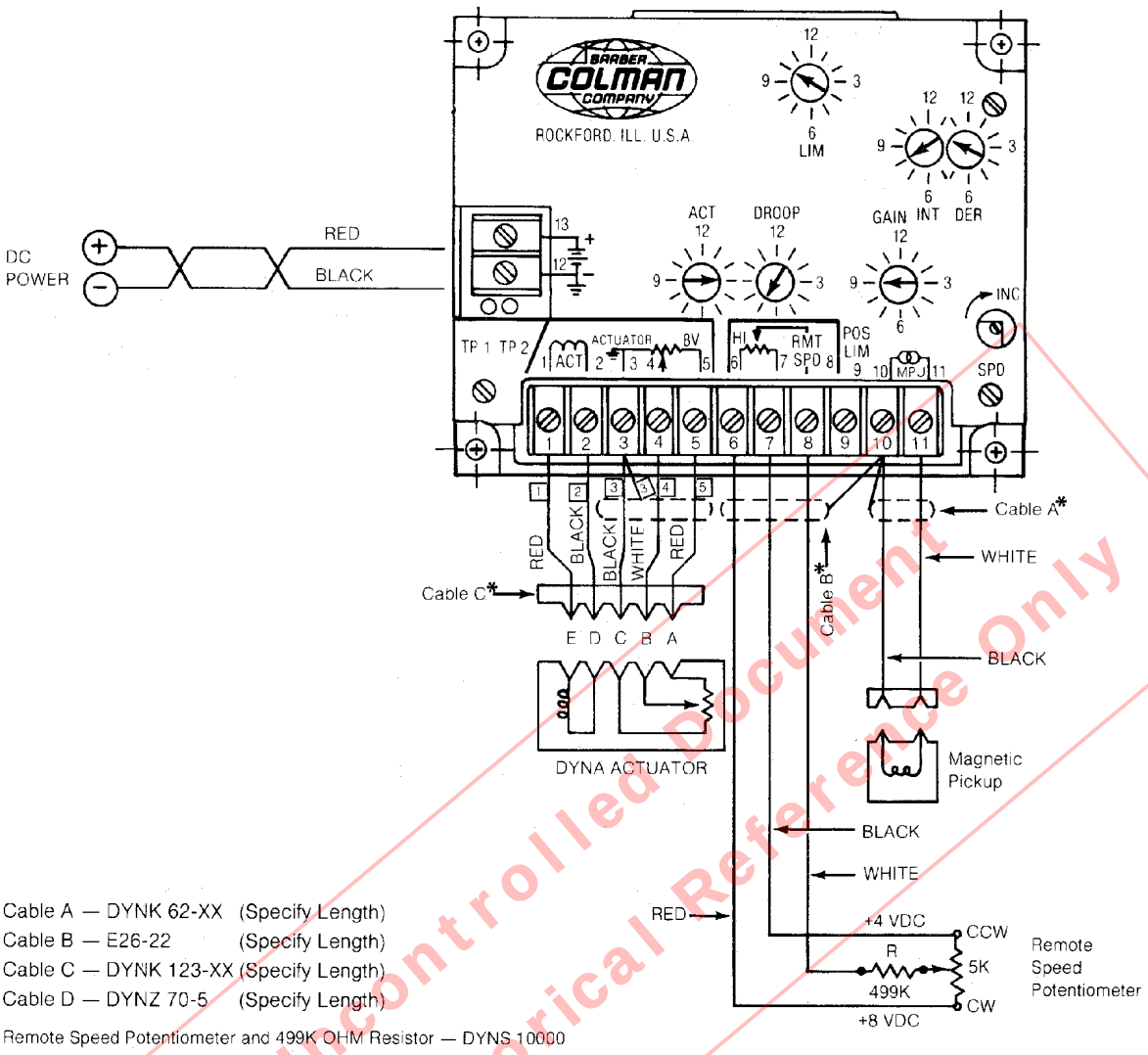

Cable A — DYNK 62-XX (Specify Length)
Cable B — E26-22 (Specify Length)
Cable C — DYNK 123-XX (Specify Length)
Cable D — DYNZ 70-5 (Specify Length)

Remote Speed Potentiometer and 499K OHM Resistor — DYNS 10000

* Shielded Cable — should be purchased from Barber-Colman or customer should purchase a cable with a wrapped mylar supported aluminum foil shield with a drain wire.

AVAILABLE PANEL MOUNTED DYNA CONTROLLER PART NUMBERS

Specify voltage 12 or 24 volts d-c when ordering.

SPEED CONTROLLERS

Part Number	Input Signal Frequency
DYN1 10502-001	250 to 1200 Hz
DYN1 10503-001	1200 to 2500 Hz
DYN1 10504-001	2500 to 5000 Hz
DYN1 10506-001	5000 to 9500 Hz

CE

Part Number	Input Signal Frequency
DYN1 10502-004	250 to 1200 Hz
DYN1 10503-004	1200 to 2500 Hz
DYN1 10504-004	2500 to 5000 Hz
DYN1 10506-004	5000 to 9500 Hz

Adjustments available: ACT, GAIN, DER, INT, LIM, DROOP and SPEED (SPD).

Wiring for CE Controllers

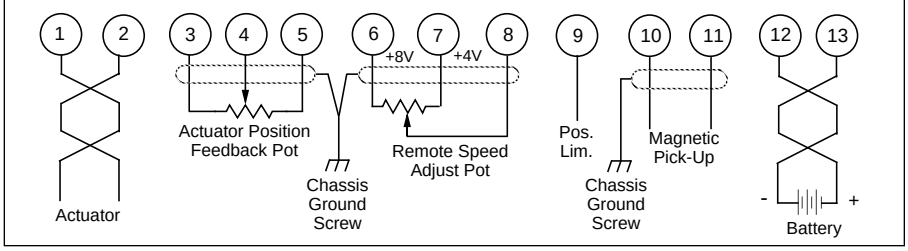

Uncontrolled Document
For Historical Reference Only

Dimensions

Dimensions in Millimeters
Inches in Brackets [ ]

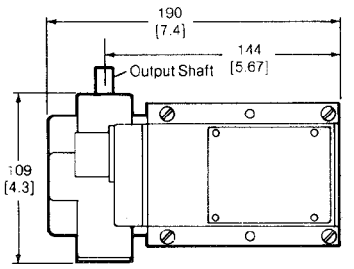

Standard Plus 1 Actuator
Clockwise Rotation

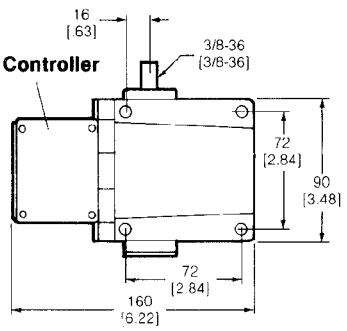

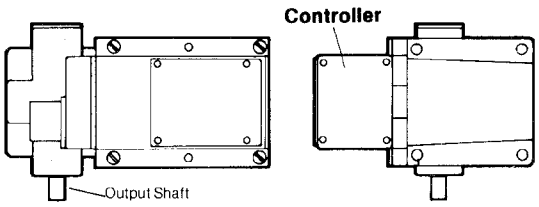

Standard Plus 1 Actuator
Counterclockwise Rotation

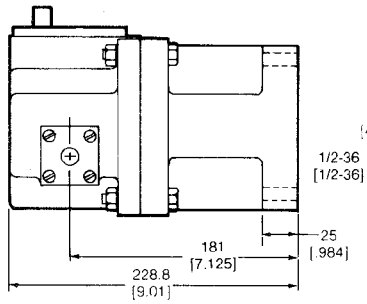

Plus 4 Actuator

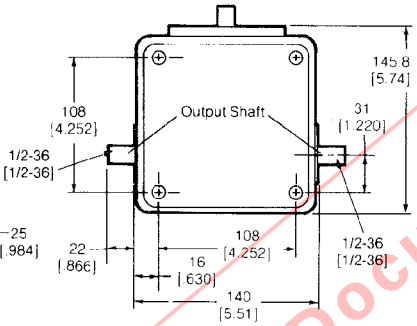

Typical Installation Diagram

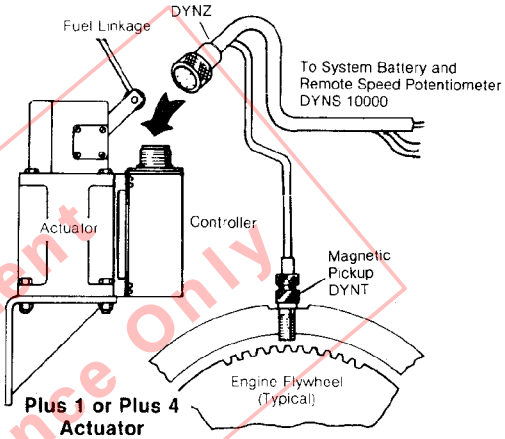

Plus 1 or Plus 4
Actuator

Uncontrolled Document
For Historical Reference Only

Typical +1 or +4 Basic Governor Wiring

Typical Engine Panel & Terminal Strip
(Not Supplied by Barber-Colman)

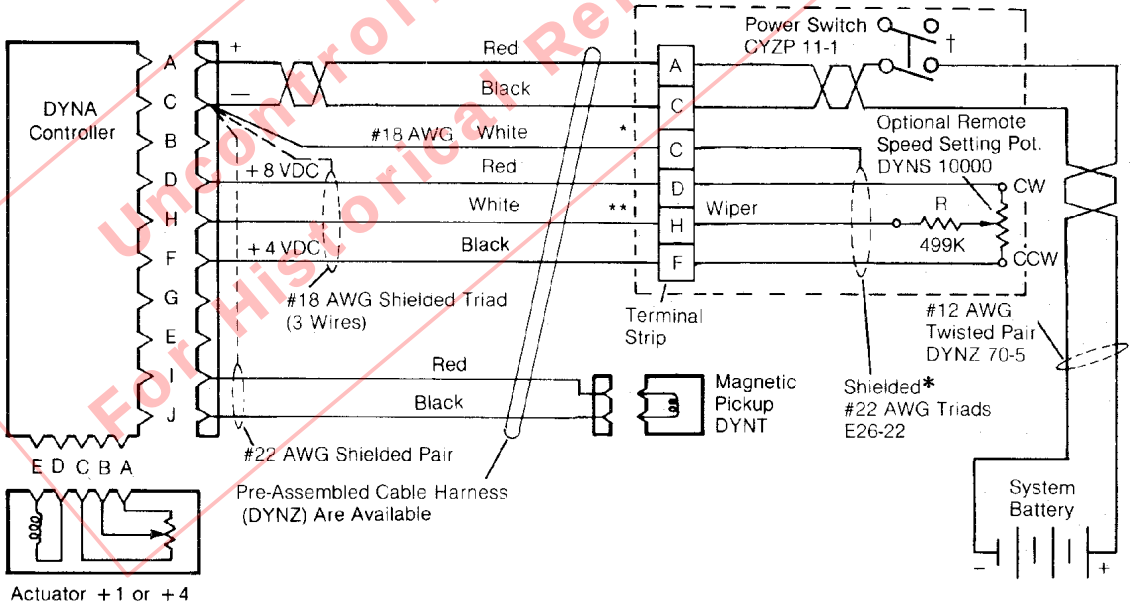

* The white wire from Pin C must not be connected to the same terminal as the black wire from Pin C.

† Power switch wiring is shown for a negative ground system. When a positive ground system is being wired, the installer should switch (break) both the positive and negative leads.

** Wiring procedure when a remote speed setting potentiometer is not used.
1. If a terminal strip is not used, then isolate and tape the ends of the wires from Pin D, F and H to keep them from touching each other or other leads.

*** Shielded Cable** — should be purchased from Barber-Colman or customer should purchase a cable with a wrapped mylar supported aluminum foil shield with a drain wire.

TABLE OF WIRE SIZES	
Size — AWG	**Nominal mm**
10	6
12	4
14	2.5
18	1.5
22	1.0

TYPICAL PLUS 2 WIRING DIAGRAM FOR DYN1 1050X SERIES PANEL MOUNTED CONTROLLERS

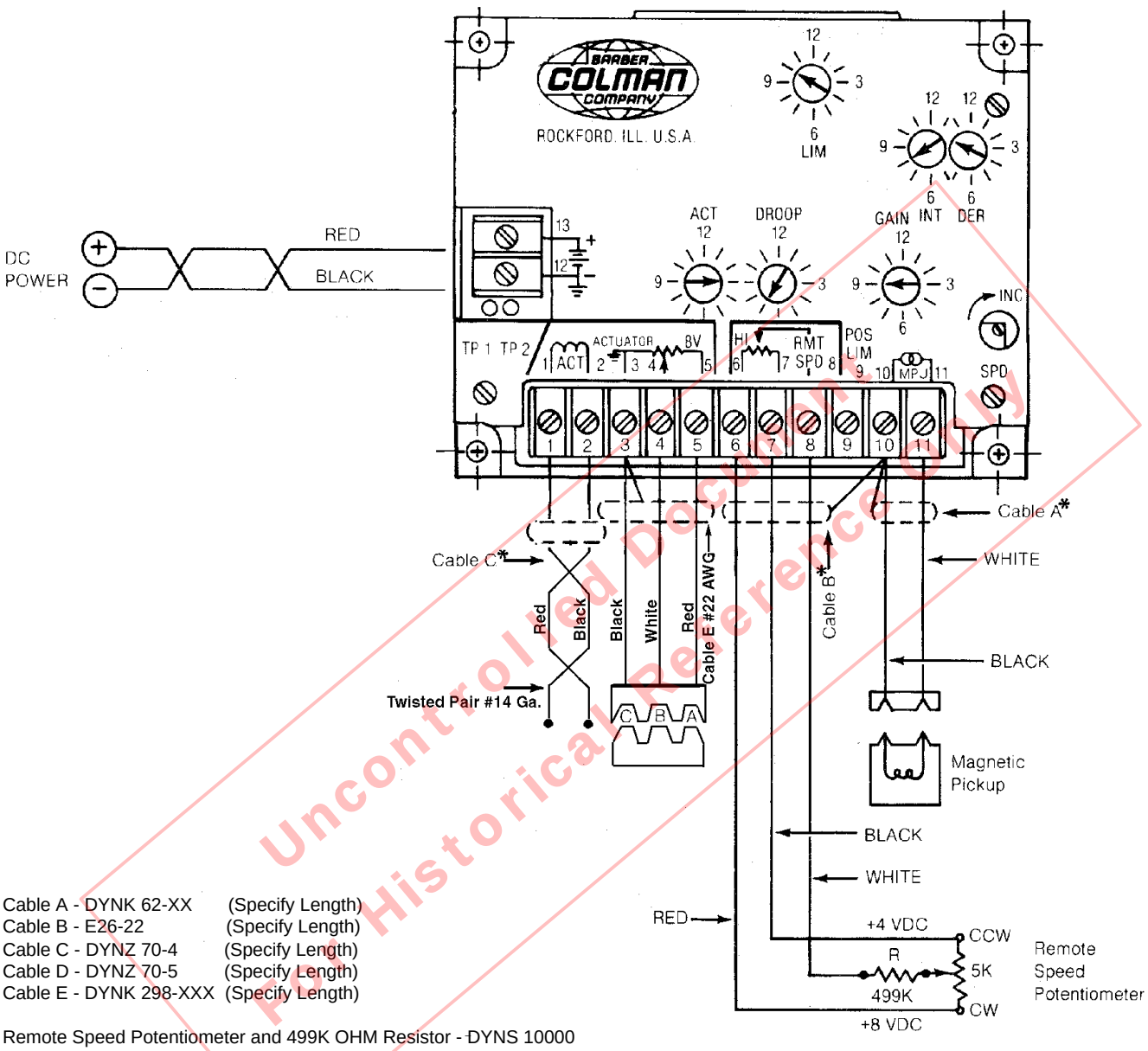

Cable A - DYNK 62-XX (Specify Length)
Cable B - E26-22 (Specify Length)
Cable C - DYNZ 70-4 (Specify Length)
Cable D - DYNZ 70-5 (Specify Length)
Cable E - DYNK 298-XXX (Specify Length)

Remote Speed Potentiometer and 499K OHM Resistor - DYNS 10000

* Shielded Cable — should be purchased from Barber-Colman or customer should purchase a cable with a wrapped mylar supported aluminum foil shield with a drain wire.

Uncontrolled Document For Historical Reference Only

AVAILABLE PANEL MOUNTED DYNA CONTROLLER PART NUMBERS

Specify voltage 12 or 24 volts when ordering.

Speed Controllers

Part Number	Input Signal Frequency
DYN1 10502-001	250 to 1200 Hz
DYN1 10503-001	1200 to 2500 Hz
DYN1 10504-001	2500 to 5000 Hz
DYN1 10506-001	5000 to 9500 Hz

CE

Part Number	Input Signal Frequency
DYN1 10502-004	250 to 1200 Hz
DYN1 10503-004	1200 to 2500 Hz
DYN1 10504-004	2500 to 5000 Hz
DYN1 10506-004	5000 to 9500 Hz

Adjustments available: ACT, GAIN, DER, INT, LIM, DROOP and SPEED (SPD).

Dimensions

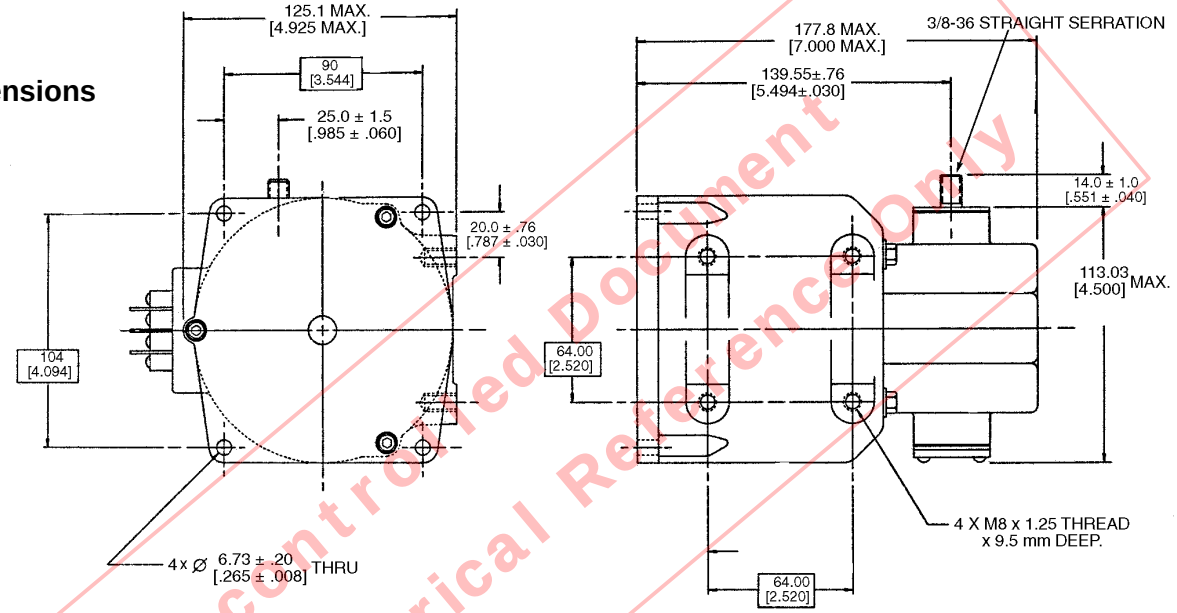

Uncontrolled Document
For Historical Reference Only

Typical Plus 2 Actuator Wiring

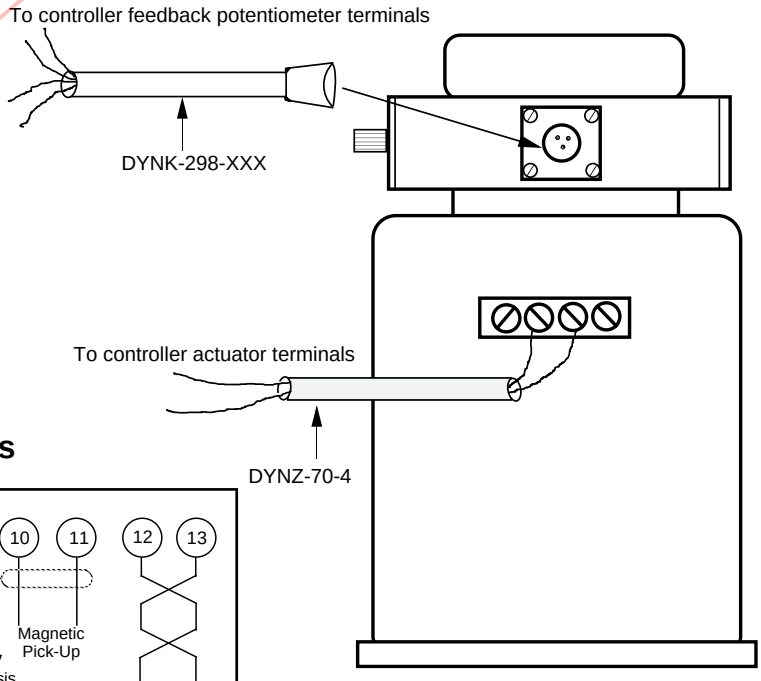

Wiring for CE Controllers

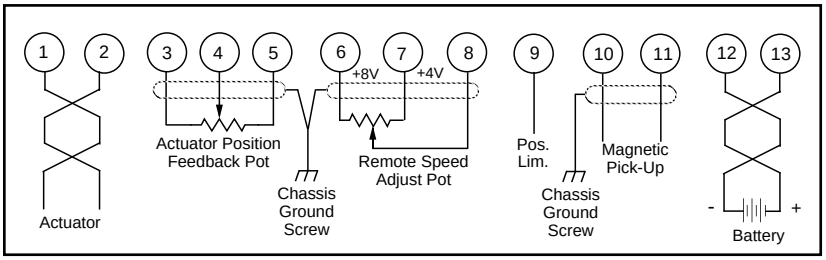

Typical Plus 6 Governor Wiring

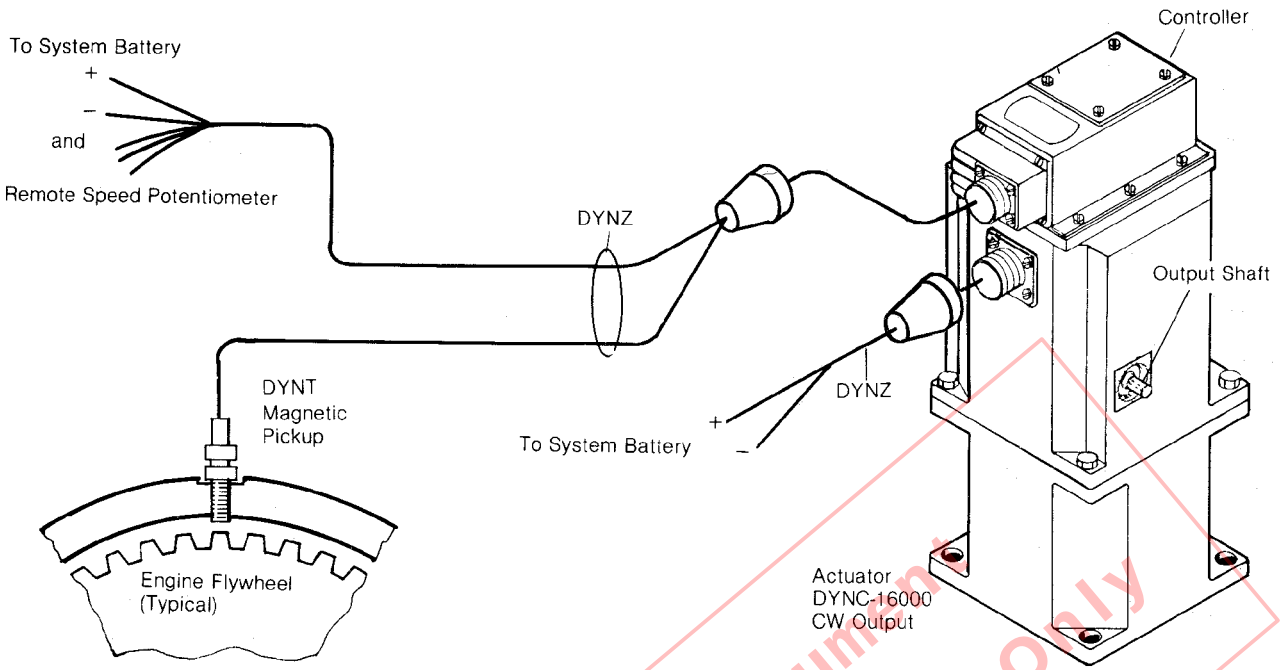

Uncontrolled Document
For Historical Reference Only

Available Actuator Models

- **Standard Actuator**

  DYNC 16000 Plus 6 with clockwise output shaft rotation
  DYNC 16001 Plus 6 with counterclockwise output shaft rotation

Typical Panel and Terminal Strip Wiring

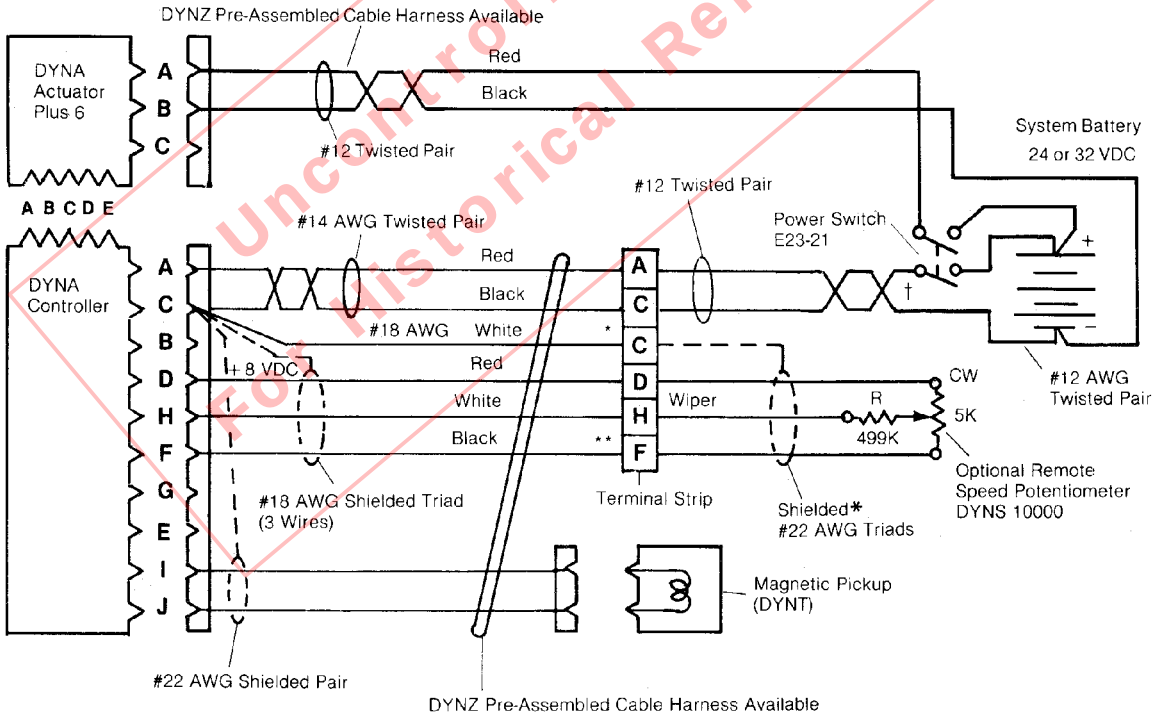

* The white wire from Pin C must not be connected to the same terminal as the black wire from Pin C.

† Power switch wiring is shown for a negative ground system. When a positive ground system is being wired, the installer should switch (break) both the positive and negative leads.

** Wiring procedure when a remote speed setting potentiometer is not used.

1. If a terminal strip is not used, then isolate and tape the ends of the wires from Pin D, F and H to keep them from touching each other or other leads.

* **Shielded Cable** — should be purchased from Barber-Colman or customer should purchase a cable with a wrapped mylar supported aluminum foil shield with a drain wire.

Typical Plus 6 Explosion Proof Governor Wiring

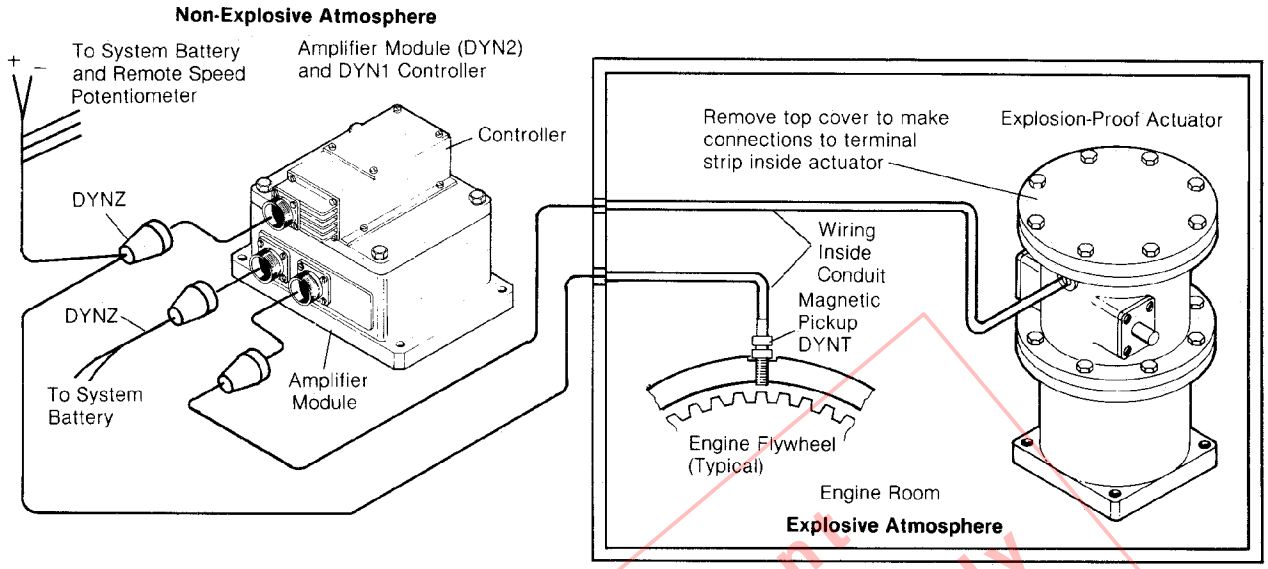

Typical Panel and Terminal Strip Wiring

TABLE OF WIRE SIZES	
Size — AWG	Nominal mm²
10	6
12	4
14	2.5
18	1.5
22	1.0

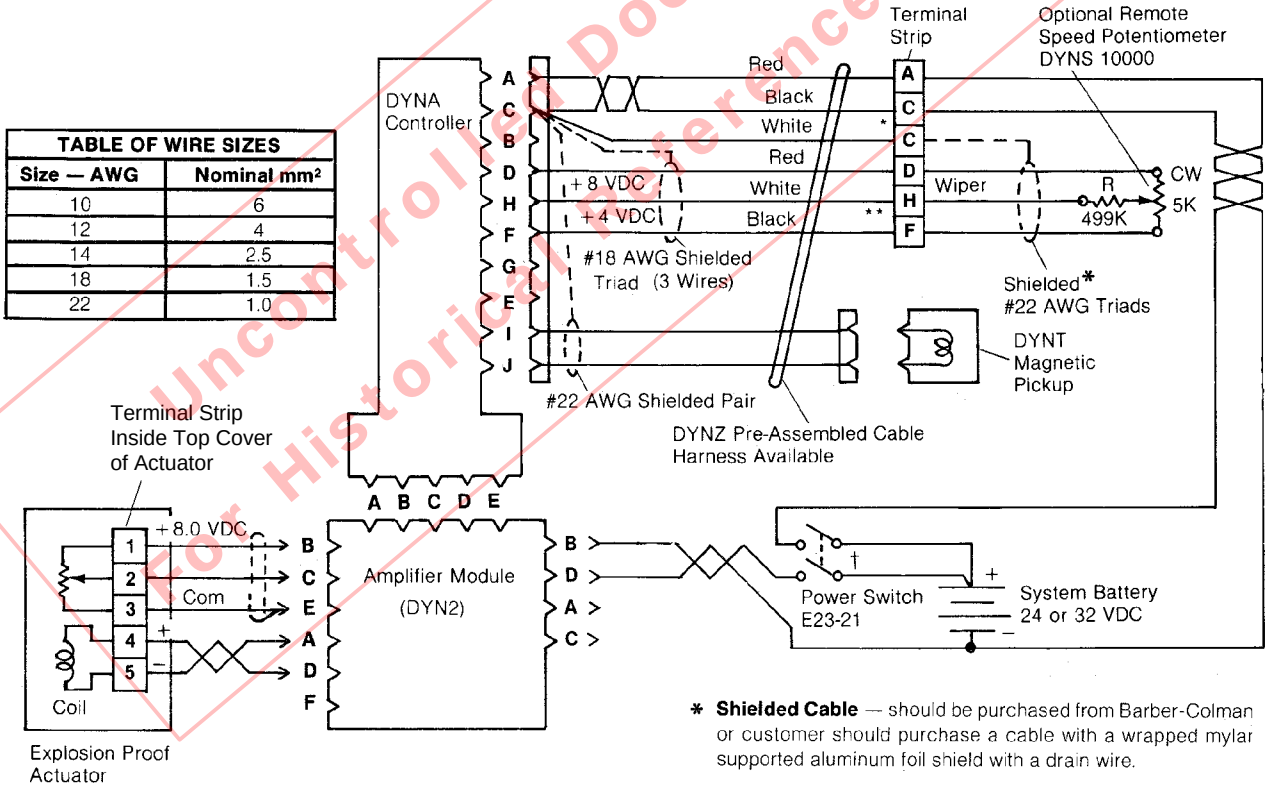

* **Shielded Cable** — should be purchased from Barber-Colman or customer should purchase a cable with a wrapped mylar supported aluminum foil shield with a drain wire.

* The white wire from Pin C must not be connected to the same terminal as the black wire from Pin C.

† Power switch wiring is shown for a negative ground system. When a positive ground system is being wired, the installer should switch (break) both the positive and negative leads.

** Wiring procedure when a remote speed setting potentiometer is not used.

1. If a terminal strip is not used, then isolate and tape the ends of the wires from Pin D, F and H to keep them from touching each other or other leads.

Uncontrolled Document
For Historical Reference Only

Specifications

Available Operating Voltages 12, 24 or 32 volts, ±20%. Other voltages on special request.

Input Signal Frequency

$$\text{Input Signal Frequency in Hertz} = \frac{\text{Engine RPM x Number of Gear Teeth on Flywheel}}{\text{60 Seconds}}$$

Select your controller for the correct input signal frequency range generated by the magnetic pickup at the maximum engine operated (RPM) speed.

Steady State Speed Band
±0.2 percent, isochronous control.

Ambient Operating Temperature
-65°F (-55°C) to +200°F (+95°C).

Temperature Stability Better than ±0.5 percent over a temperature range of -55° to 95°C (-65° to 200°F).

Speed Regulation (Droop) Adjustable from 0 to 15 percent. Remote adjustment optional.

Mechanical Vibration Tested 5 to 500 Hz @ 25 G's (peak level on the governor).

Output Signal Pulse width modulated current to DYNA actuator. Maximum output current is 14 amperes.

Circuit Boards Boards are covered with a heavy conformal coating for moisture and vibration protection.

Enclosure Aluminum extrusion.

Weight 635 grams (1.4 lbs.).

Speed Governing
DYNA controllers are available for engine governing for speed and power control of piston and gas turbine engines where the fuel is controlled by the governor's output shaft. The controllers are also applicable for controlling steam and water turbines.

Tandem Engine Governing
DYNA controllers are available for tandem engine operation. The controller provides the precise positioning required for accurate tracking of two governor actuators used for controlling tandem-coupled engines.

No-Break Engine Governing
DYNA controllers are available for no-break operation. The controller is designed to provide dual-mode operation. The controller functions with fixed gain when the engine is declutched and with an adjustable high gain when the engine is coupled to the load.

Propulsion Governing
DYNA controllers are available for engine governing of propulsion engine applications. The control has an adjustable low limit feature which is required to maintain correct engine operation due to the loading characteristics of the propeller. The same controller should be used on tandem-coupled propulsion engine applications.

Wide Speed Range Governing
DYNA controllers are available for wide speed range governing for speed and power control of piston and gas turbine engines where the fuel is controlled by the governor's output shaft. The controller is designed to provide improved governor performance and control over a wider speed range than the standard speed governor.

Uncontrolled Document
For Historical Reference Only

Dimensions

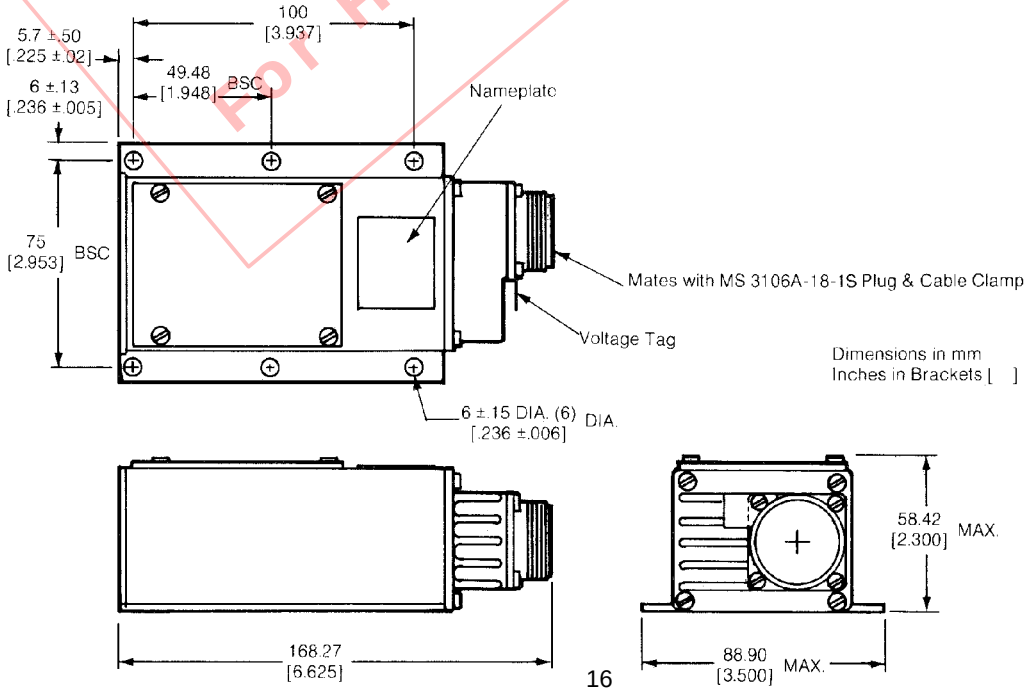

Available DYNA Controller Part Numbers

Specify voltage 12, 24 or 32 volt d-c when ordering.

SPEED CONTROLLERS **CONFIGURATION A**

Part Number	Input Signal Frequency
DYN1 10002-2	250 to 1200 Hz
DYN1 10003-2	1200 to 2500 Hz
DYN1 10004-2	2500 to 5000 Hz
DYN1 10006-2	5000 to 9500 Hz

Adjustments available: A, Gain, D, I, L, Droop and Speed (under controller cover).

TANDEM CONTROLLER **CONFIGURATION A**

Part Number	Input Signal Frequency
DYN1 10008-2	2500 to 5000 Hz

NO-BREAK CONTROLLER **CONFIGURATION A**

Part Number	Input Signal Frequency
DYN1 10010	2500 to 5000 Hz

PROPULSION CONTROLLERS **CONFIGURATION B**

Part Number	Input Signal Frequency
DYN1 10024-2	250 to 1200 Hz
DYN1 10025-2	1200 to 2500 Hz
DYN1 10026-2	2500 to 5000 Hz

Adjustments available: A, Gain, D, I, Droop, High Limit, Low Limit and Speed (under controller cover).

Note: The following is for reference only; these controllers are no longer manufactured.

SPEED CONTROLLERS **CONFIGURATION C**

Part Number	Input Signal Frequency
DYN1 10112-0	250 to 1500 Hz
DYN1 10113-0	1200 to 3000 Hz
DYN1 10114-0	2500 to 6000 Hz
DYN1 10116-0	5000 to 10000 Hz

Adjustments available: I, Droop and Speed (under controller cover); Stability and Speed Trim (on side of controller).

SPEED CONTROLLERS **CONFIGURATION D**

Part Number	Input Signal Frequency
DYN1 10212-0	250 to 1500 Hz
DYN1 10213-0	1200 to 3000 Hz
DYN1 10214-0	2500 to 6000 Hz
DYN1 10216-0	5000 to 10000 Hz

Adjustments available:Gain, I, Droop & Speed (under controller cover).

WIDE SPEED

RANGE CONTROLLERS **CONFIGURATION E**

Part Number	Input Signal Frequency
DYN1 10312-0	250 to 1500 Hz
DYN1 10313-0	500 to 3000 Hz
DYN1 10314-0	1000 to 6000 Hz
DYN1 10316-0	2000 to 12000 Hz

Adjustments available: Gain, D, I, Droop & Speed (under controller cover).

Adjustment Configurations

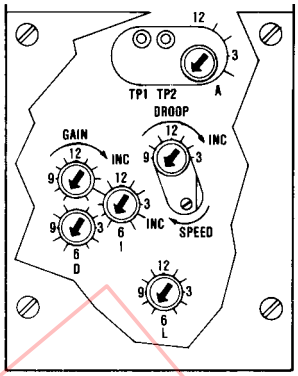

Configuration A

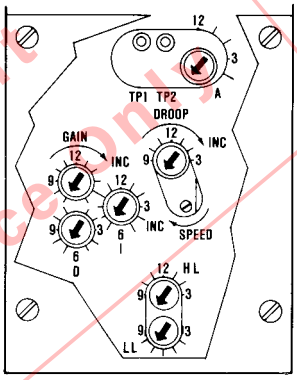

Configuration B

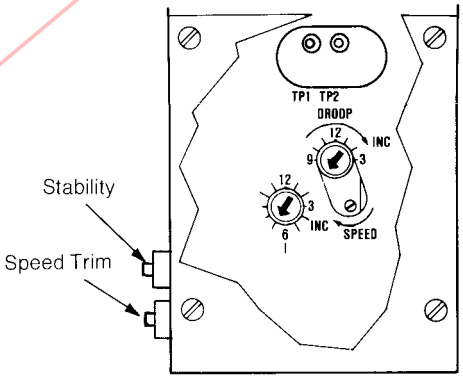

Configuration C

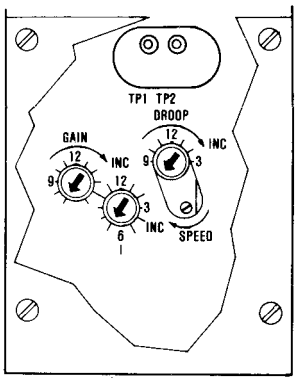

Configuration D

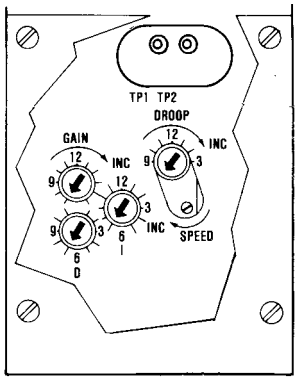

Configuration E

Uncontrolled Document
For Historical Reference Only

DYNA Controller Inputs

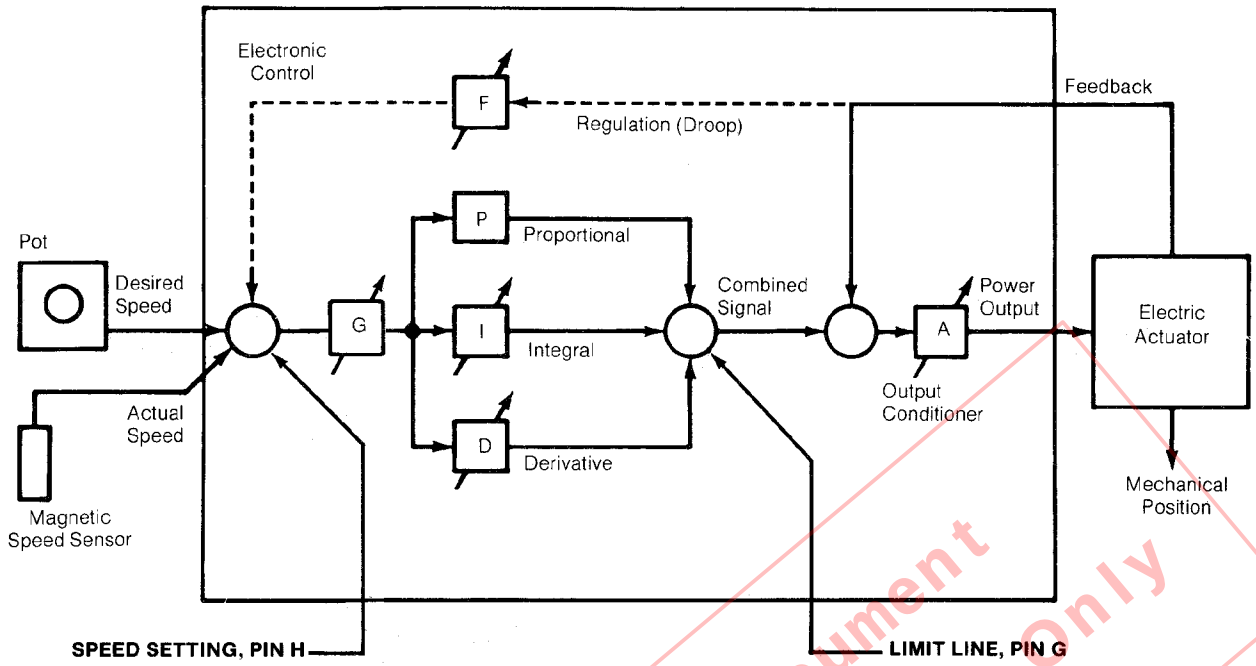

Modify speed with respect to:
Remote Speed Setting
Time (Ramp Generator)
Electrical Load Change (Load Pulse)
Electrical Load (Isochronous Load Sharing)
Electrical Phase Angle (Synchronizer)

On Pump Applications:
Output Pressure
Output Temperature
Liquid Level
(Controller/Recorder Output)

Limit fuel (rack or throttle position) with respect to:
Maximum Fuel Permitted (Load Limit)
Temperature (Exhaust)
Manifold Pressure (Smoke Limit)
Oil Pressure
Time (some ramp generator applications)
Requested Speed (Torque Limit)
Actual Speed (Torque Limit)

Uncontrolled Document
For Historical Reference Only

FEATURES ARE EASY TO ADD

It is easy to add features to the electric governor to provide benefits the customer needs. Remote speed setting, isochronous load sharing, automatic synchronizing, ramp generator, single phase load pulse and KW limits can be added at the time of initial governor installation or, just as easily, added later when the need arises. No modification to the basic governor is required when these features are added. In fact, if the prewired harness is used, the wires necessary to add these features are often already provided, so it is indeed easy to add features.

AUXILIARY CONTROL MODULES

Four auxiliary control modules are available: Isochronous Load Sharing Control, Auto-Synchronizer, Ramp Generator, and Single Phase Load Pulse Control. These and other auxiliary functions can be installed at the time of the initial governor installation or, just as easily, added later when the need arises. No modification is required to the basic governor when these modules are added.

Barber-Colman DYNA Products
1354 Clifford Avenue
P.O. Box 2940
Loves Park, IL 61132-2940
United States of America

Telephone +1 815 637-3000
Facsimile +1 815 877-0150
www.dynaproducts.com

In Europe contact: Barber-Colman GmbH
Am Neuen Rheinhafen 4, D-67346 Speyer, Germany
Telephone (49) 6232 29903, Facsimile (49) 6232 299155

In Japan contact: Ranco Japan Ltd.
Shiozaki Bldg. 7-1, 2-chome, Hirakawa-Cho, Chiyoda-Ku
Tokyo 102, Japan
Telephone (81) 3 3261 4293, Facsimile (81) 3 3264 4691

NOTE
Barber-Colman believes that all information provided herein is correct and reliable and reserves the right to update at any time. Barber-Colman does not assume any responsibility for its use unless otherwise expressly undertaken.

CAUTION
As a safety measure, the engine should be equipped with an independent overspeed shutdown device in the event of failure which may render the governor inoperative.

Katolight Service - Master Repair Manual - Page 2620

Installation

I
1(1)

EDC III
Industrial engines

TAD1240GE, TAD1241GE
TAD1242GE, TWD1240VE

Installation

EDCIII

TAD1240GE, TAD1241GE
TAD1242GE, TWD1240VE

Contents

Safety advice 2
Special tools 4
General information 5
EDC III Fuel system 5
Component location 7
System voltage 24 V 8

TAD1240–42GE (Standalone) 9
General information 9
Connection 10
Engine management 10
Warning and indication lamps 12
Other 14
Synchronization/load distribution 15
System reset 15
Wiring diagram 16
Parameter setting 17

TAD1240–42GE (CIU) 19
General information 19
Connection 20
Engine management 20
Warning and indication lamps 23
Instruments 25
Other 27
Synchronization/load distribution 28
System reset 28
Wiring diagram 27
Parameter setting 30

TWD1240VE (Stand alone) 32
General information 32
Connection 33
Engine management 33
Warning and indication lamps 35
Other 37
System reset 38
Wiring diagram 39
Parameter setting 40

TWD1240VE (CIU) 43
General information 43
Connection 44
Engine management 44
Warning and indication lamps 46
Instruments 48
Other 50
System reset 50
Wiring diagram 51
Parameter setting 52

TWD1240VE (Power Pack) 55
Wiring diagram 56
Parameter setting 57

Fault tracing 60
Diagnostic function 61
Fault codes 63

© 2001 AB VOLVO PENTA
All rights to changes or modifications reserved.
Printed on environmentally-friendly paper

Safety advice

Introduction

This instruction book contains the information needed to install and function check the EDC system (electronic control of the fuel injection system).

Read the instruction book carefully before you start installation. If the installation is done in a faulty manner, this can cause personal injury or damage to property and machinery.

If you do not understand, or are unsure about anything in this instruction book, please ask your Volvo Penta dealer for assistance.

Installation

This installation manual is only intended for professional use.

The installation manual is intended to be used together with the relevant engine instruction book.

Volvo Penta declines all responsibility for personal injury or property damage which might occur as a result of not following the installation advice, or if the work is not done by professional personnel.

The installer is responsible for ensuring that the system operates in the manner described in the instruction book.

Work methods

These instructions are intended to be used by suitably qualified personnel. In these instructions, these person(s) is/are referred to as the installer(s).

Also refer to the specific engine instruction book for relevant information when necessary, and in particular for information relating to safety and engine operation.

The work must be done by Volvo Penta workshops, boat yards or other authorized, well-equipped workshop, with qualified and experienced personnel.

Important!

The following special warning symbols occur in this book and on the engine.

⚠ **WARNING!** Warns for the risk of personal injury, property damage or that a mechanical fault can occur if the instructions are not followed.

⚠ **IMPORTANT!** Is used to call attention to things which could cause damage or malfunctions to product or property.

NOTE! Is used to call attention to important information, to facilitate work processes or operation.

We have summarized the risks which always must be noted and the precautions to be taken during installation and calibration of the EDC system.

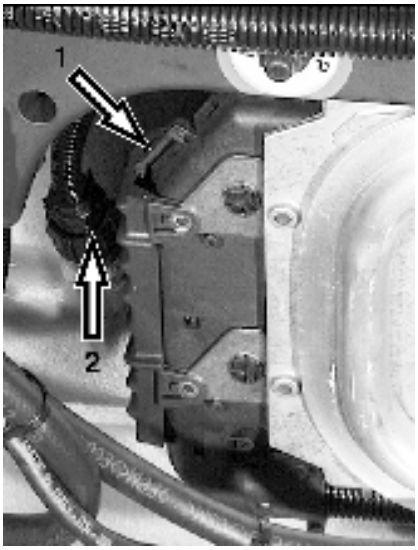

⚠ Before electric welding is done, the connector on the EDC system must be disconnected. This is located behind the fuel cooling coil.
Disconnect the engine from system voltage by turning off the main switch.
Disconnect the cable connector from the control unit. Press the catch (1) in and move the cable connector (2) upwards. Re-connect the connector on the EDC unit once electric welding work has been completed and the welding equipment has been disconnected.

Katolight Service - Master Repair Manual - Page 2624

⚠ Be careful, watch out for the moving components of the engine during function testing and in operation. Approaching the engine during operation entails a risk of personal injury. Remember that loose clothes or long hair can catch on rotating components and cause severe injury.

⚠ Never do any work on an engine which just hangs from a lifting devise (crane etc.).

⚠ The engine must not be run in areas where explosive material or any gases are stored.

⚠ Only start the engine in a well-ventilated area. If the engine is run in a confined space, make sure that the crankcase ventilation and exhaust gases can be led away from the workplace.

⚠ The batter lockers must never be exposed to open flames or sparks. Do not smoke close to the batteries. The batteries generate hydrogen gas when charged, which can form an explosive gas when mixed with air. This gas mixture is very flammable and highly explosive. A spark, which can be formed if the batteries are wrongly connected, is enough to make a battery explode and cause damage. Do not move the connections when you attempt to start the engine (risk of arcing), and do not stand and lean over one of the batteries. Please refer to the advice in the instruction book.

⚠ Always ensure that the + (positive pole) and – (negative pole) are securely connected to their appropriate terminals on the battery. If the batteries are wrongly connected, this can cause severe damage to the electrical equipment. Please refer to the wiring diagram in the engine instruction book.

⚠ Always use goggles when charging and handling batteries. Battery electrolyte contains sulfuric acid, which is highly corrosive. If battery acid comes into contact with your skin, wash it off at once with a lot of soap and water, and then get medical help. If battery acid comes into contact with your eyes, flush your eyes at once (preferably with an eye shower) with a lot of clean water, and then get medical help at once.

Special tools

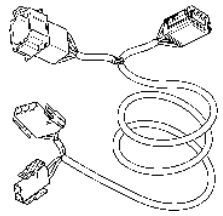

874427



885337

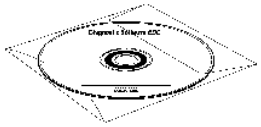

7741508

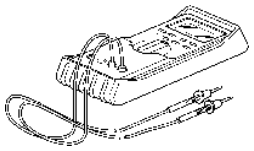

9510060

874427-8 T-piece diagnostic connector

885337-6 Communication cable for PC, incl. order form for diagnostic program on CD-ROM (CD not included in 885337-6)

7741508-1 Parameter setting tool*

9510060-8 Multimeter

* software on CD incl. 1 year's subscription

Other special equipment

The tools below are intended for use in work on the cable harnesses of the engine. The tools are not included in Volvo Penta's range, they must be ordered from a local **AMP** or **Deutsch** dealer. If you experience problems in contacting a dealer, please contact Volvo Penta Quality Action Center for advice.

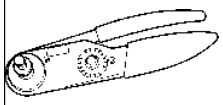

HDT-48-00

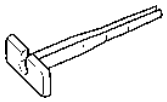

0411-310-1605



AMP 725 840



AMP 58 495



AMP 726 534



AMP 726 519



AMP 825 514



AMP 725 938



AMP 825 582

Deutsch connectors

HDT-48-00 Crimping tool

0411-310-1605 Disassembly tool

16-pin CPC connector, d=1.6 mm (0.063")

725 840-1 Disassembly tool

58 495-1 Crimping tool

JPT connector (42-pin EDC, 2 and 3-pin Bosch etc.)

726 534-1 Disassembly tool 1.6 mm (0.063") pin width

726 519-1 Disassembly tool 2.8 mm (0.11") pin width

825 514-1 Crimping tool

Blades and sockets 3.5 mm (0.14")

725 9380 Disassembly tool

825 582-2 Crimping tool

4.8 mm (0.19") and 6.3 mm (0.25") cable clamps. Tongues and socket terminals

825 514-1 Crimping tool

General information

What is EDC III?

EDC III means “Electronic Diesel Control”, and is an electronic system with CAN communication for diesel engine control. The system has been developed by Volvo Penta and includes fuel control and diagnostic function. The system consists of a control unit, six unit injectors, a number of sensors which provide the control unit with values, diagnostic connector and function check. The EDC III system also has a so-called “Stand alone” interface which can be connected directly to the engine management unit on the engine. The engine can be connected to a so-called “CAN” interface and to a “Control Interface Unit” (CIU) which is an interface to the driver’s controls.

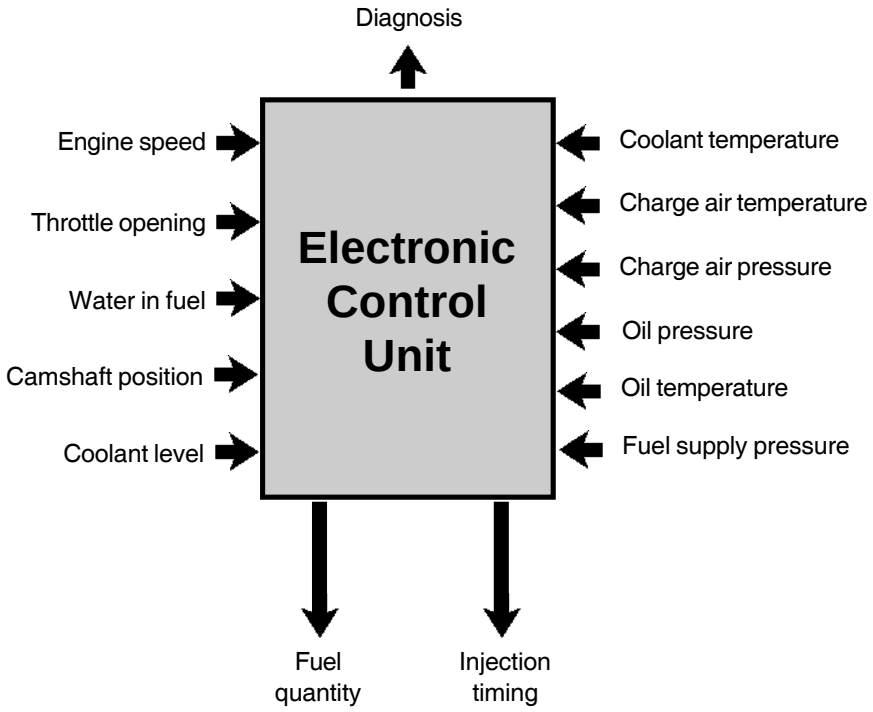

Control unit

The EDC III system processor is encased in the control module and is protected against moisture and vibration.

The processor receives continuous information about:

- engine speed
- charge air pressure
- charge air temperature
- coolant temperature
- oil pressure
- oil temperature
- fuel alarm, combined alarm for “water in fuel” and “fuel pressure”
- coolant level

The information provides exact information about current operation conditions and allows the processor to calculate the correct fuel volume, check engine status etc.

Fuel control

The engine fuel requirement is analyzed up to 100 times per second (depending on engine speed). The amount of fuel injected into the engine and the injection advance are fully electronically controlled, via fuel valves and the unit injectors.

This means that the engine always receives the correct volume of fuel in all operating conditions, which offers lower fuel consumption, minimal exhaust emissions etc.

The control unit checks and controls the unit injectors, to ensure that the correct volume of fuel is injected into each cylinder. It calculates and adjusts the injection advance. Regulation is mainly done with the aid of the engine speed sensors and the combined sensor for charge pressure/charge air temperature.

The control unit controls the unit injectors via an electronic signal to the electromagnetically operated fuel valve in each unit injector, which can be opened and closed.

When the fuel valve is open, fuel flows past, through the holes in the unit injectors and out through the fuel duct. Fuel is not injected into the cylinders in this position.

When the fuel valve is closed, pressure is built up by the mechanically driven pump piston in the unit injector. When enough pressure has been built up, fuel is injected into the cylinder via the injection part of the unit injector.

The fuel valve is re-opened and pressure in the unit injector falls at the same time as fuel injection to the cylinder ceases.

The control unit has access to signals from sensors and opening switches to determine when the fuel valve should be opened and closed.

Calculation of fuel quantity

The quantity of fuel to be injected into the cylinder is calculated by the control unit. The calculations give the time that the fuel valve is closed (when the fuel valve is closed, fuel is injected into the cylinder). The parameters which govern the amount of fuel injected are:

- Demanded engine speed
- Engine protection functions
- Temperature
- Charge air pressure

Cylinder balancing

During idling, the control unit can provide the cylinders with different amounts of fuel. This is to give the engine more even idling. At higher engine speeds, this problem does not exist and the cylinders are given the same amount of fuel.

Diagnostic function

The EDC III system has a built-in diagnostic function which allows faults in the engine and sensors to be discovered.

The task of the diagnostic function is to discover and localize any disturbances within the EDC III system, to protect the engine and to ensure operation in the event of serious disturbances.

If a malfunction is found, the diagnostic button indicator in the control panel begins to flash. By pressing the diagnostic button, the operator will receive a diagnostic trouble code (DTC) as a guide for any fault-tracing. The diagnostic function can be read by means of a PC with diagnostic function.

Idling adjustment (low idle)

Idling speed can be adjusted between 600-1200 rpm by means of the parameter tool.

Component location

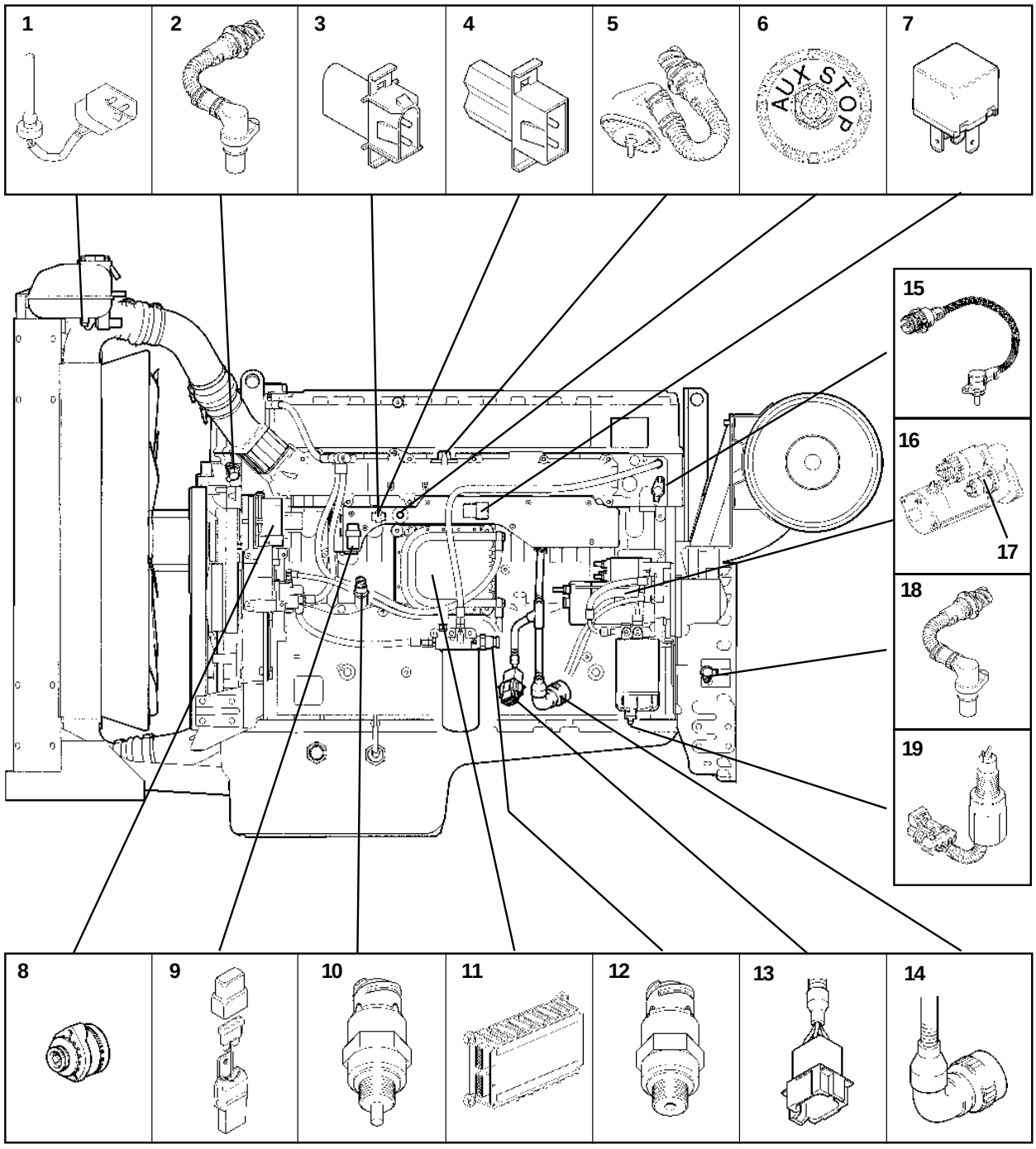

1. Coolant level monitor
2. Speed sensor, camshaft
3. Connector, diagnostic tool
4. Programming plug
5. Charge pressure / Charge temperature sensor
6. Extra stop
7. Main relay
8. Alternator
9. Fuse 10 A
10. Oil pressure / Oil temperature sensor
11. Control unit
12. Fuel pressure monitor
13. 8-pin connection
14. 23-pin connection
15. Coolant temperature sensor
16. Starter motor
17. Starter motor relay
18. Speed sensor, flywheel
19. Water monitor, fuel filter

System voltage 24 V

NOTE! All engines are equipped with a 2-pole electrical system. This means that the positive and negative cables from the battery must be connected to the starter motor terminals.

The positive cable from the battery must be connected via a main switch to terminal 30 on the starter motor. The negative cable from the battery must be connected directly terminal 31 on the starter motor

Battery specification

Max. battery 143Ah, 570A DIN

Battery charging

Standard practice on all engines is that the batteries are provided with power from the alternator.

Battery cable area

The total length (L) of the positive and negative cables determines the area (A) of the cables.

Max L (m)	2	3	4	4,5	6	7
Min A (mm^2)	70	95	120	2x70	2x95	2x120

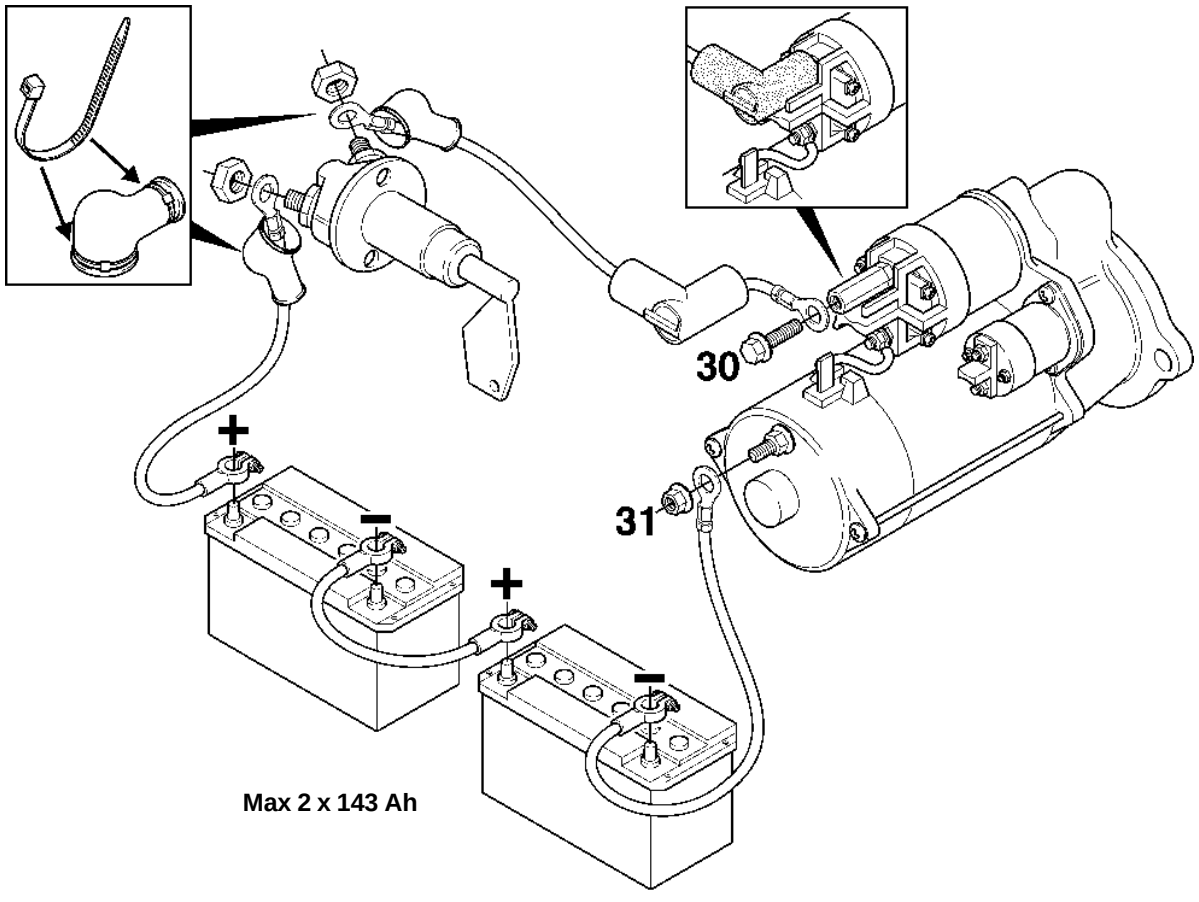

TAD1240–42GE (Standalone)

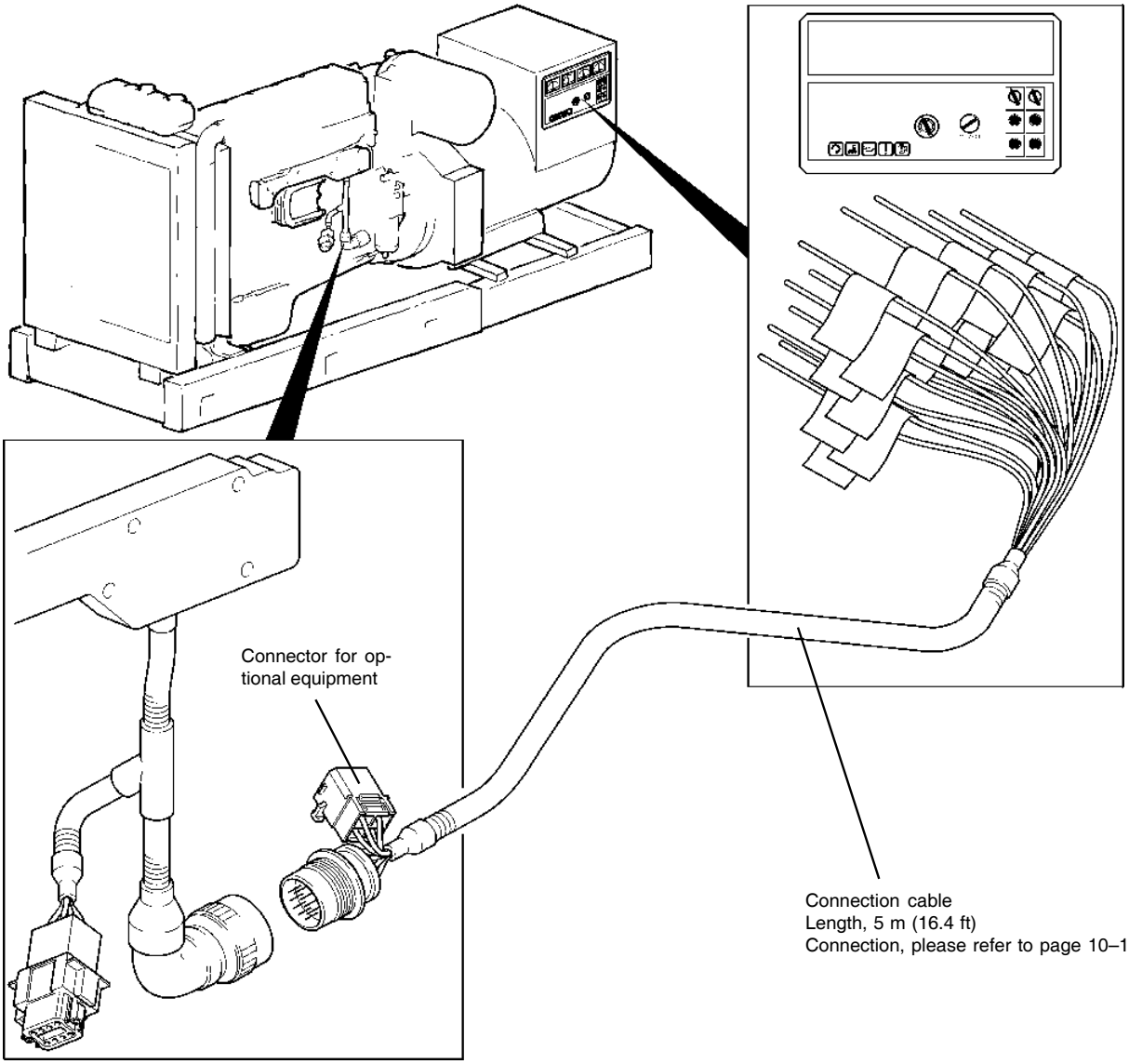

General information

The installation must be planned very thoroughly and done with the greatest care.

The connection cable between the engine and the instrument panel must be securely clamped. Remember that the connectors must also be supported so that they are not subjected to any tension.

Cables must not be run too close to hot components on the engine or close to any other source of heat. Make sure that it is protected from mechanical wear, sharp edges and water splashes. If necessary, run the cable through protective conduits.

Avoid making joints in the system as far as possible. Cables and any joints must be accessible for inspection and service

NOTE! The connectors must be installed “dry”, they must not be packed with Vaseline etc.

Connector for optional equipment

The connection cable is provided with four extra conductors for connection of instrument sensors etc.

The four-pin connector is marked “Extra”. The four cables are marked “T”, “U”, “V” and “W”.

Connection

Engine management

(please refer to wiring diagram on page 16)

Starter switch (system voltage ON / OFF)

NOTE! The starting current for engine system voltage (control unit) is 10 A. Make sure that other components in the installation are dimensioned for this current density.

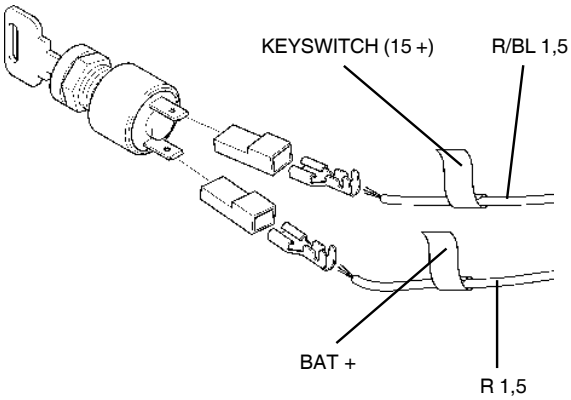

Start switch

Contact type, closing (NO), spring biased.

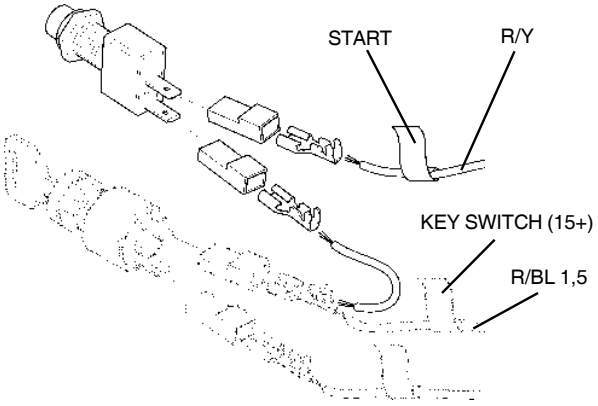

Stop switch

Contact type, opening (NC), spring biased

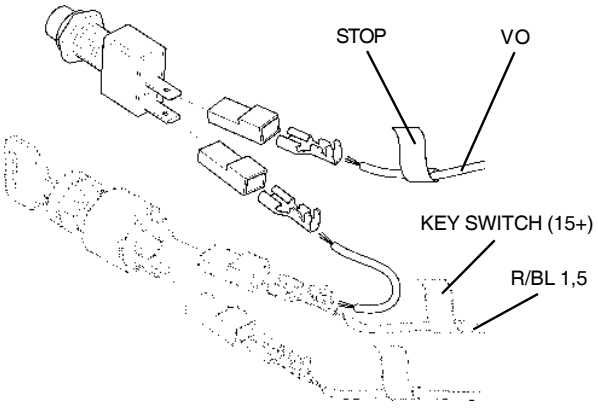

Engine speed potentiometer

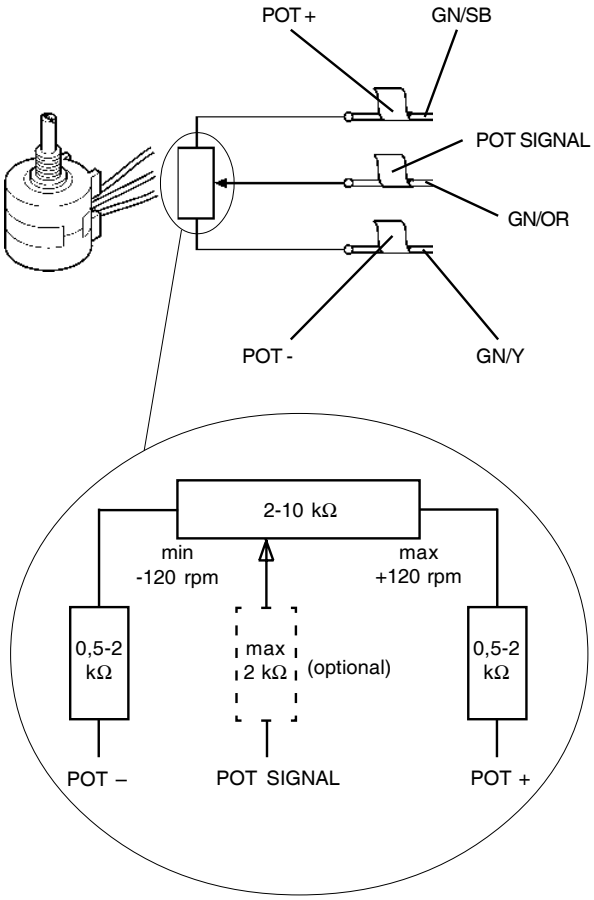

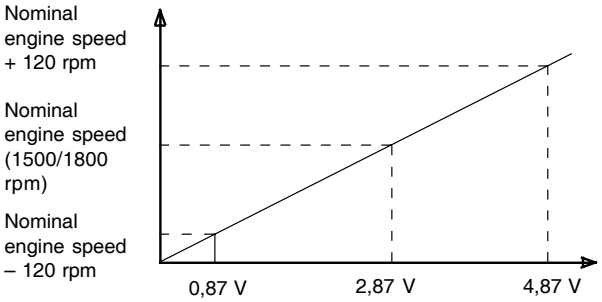

Voltages lower than 0.87 V, or higher than 4.87 V are not permissible.

1500 / 1800 rpm switch

This function permits frequency to be changed from 50 to 60 Hz.

Contact type, two-position (NO).

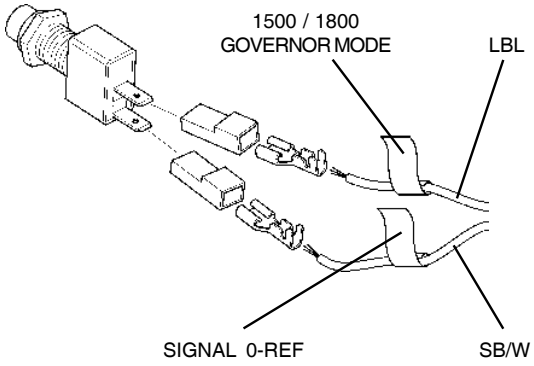

Idling terminal

Contact type, two-position (NO).

Closed contact gives idling speed (900 rpm).

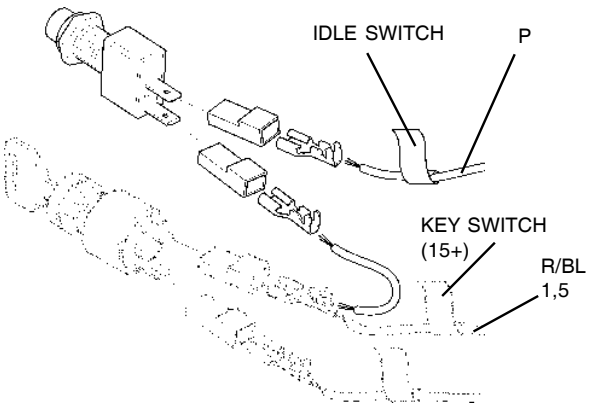

Warning and indication lamps

(please refer to wiring diagram on page 16)

Alarm, low oil pressure

Max. power 3 W

Voltage 24 V

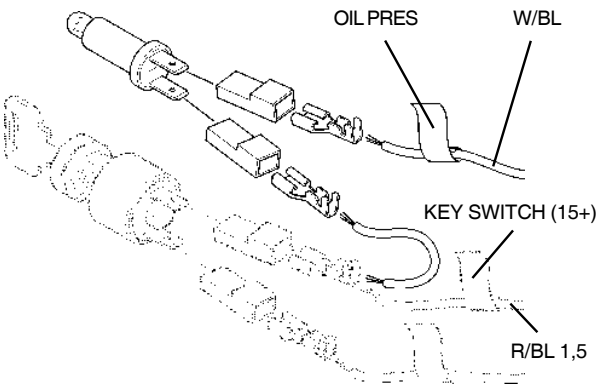

Alarm, high coolant temperature

Max. power 3 W

Voltage 24 V

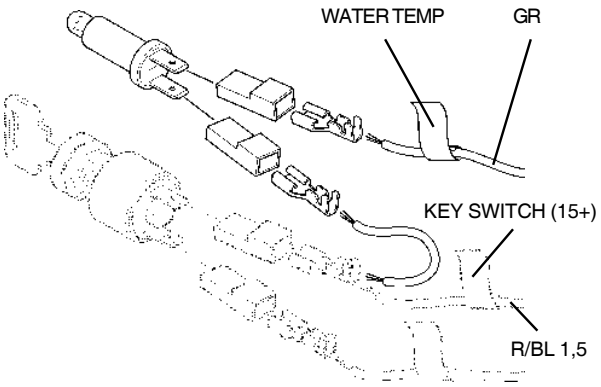

Operation indication

Max. power 3 W

Voltage 24 V

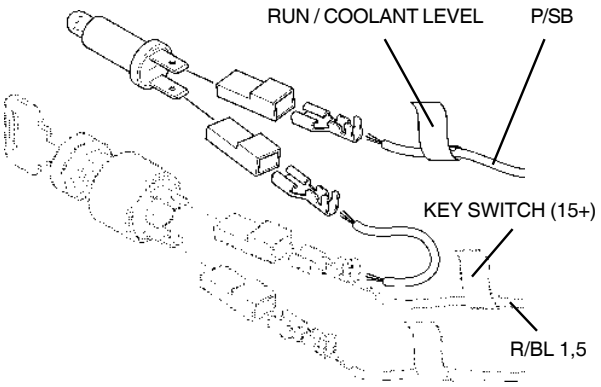

Alarm, over-speed

Max. power 3 W

Voltage 24 V

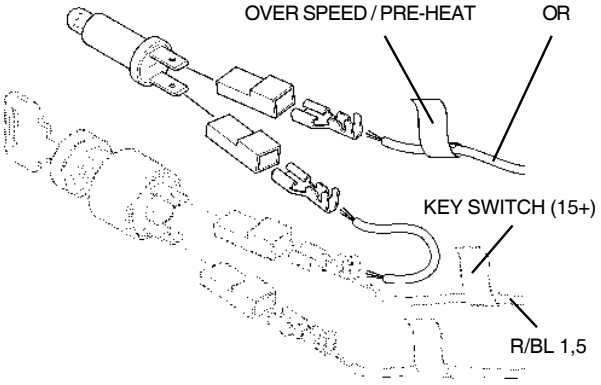

Diagnostic lamp

Max. power 3 W

Voltage 24 V

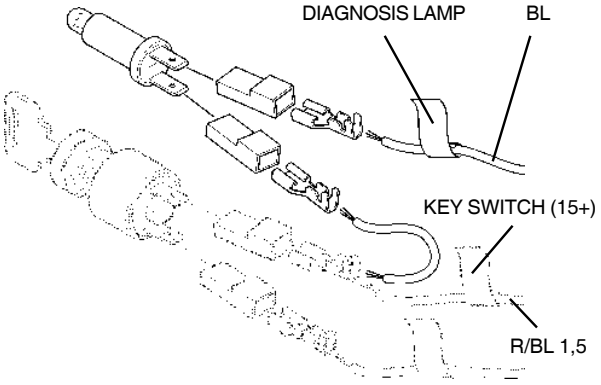

Other

(please refer to wiring diagram on page 16)

Diagnostic connector

Contact type, closing (NO), spring biased.

To read the fault codes, please refer to chapter “Fault tracing”.

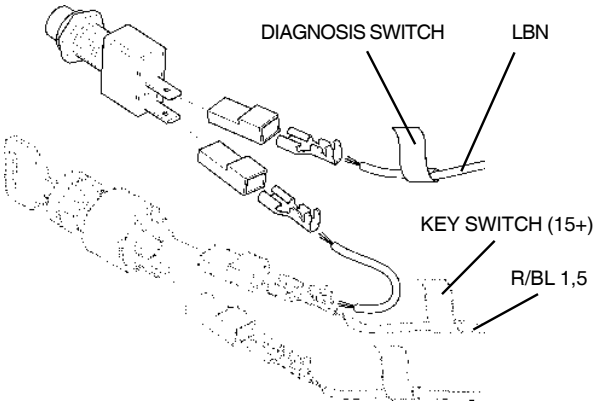

Pre-heating switch

NOTE! Preheating function not used on TAD1240–42GE.

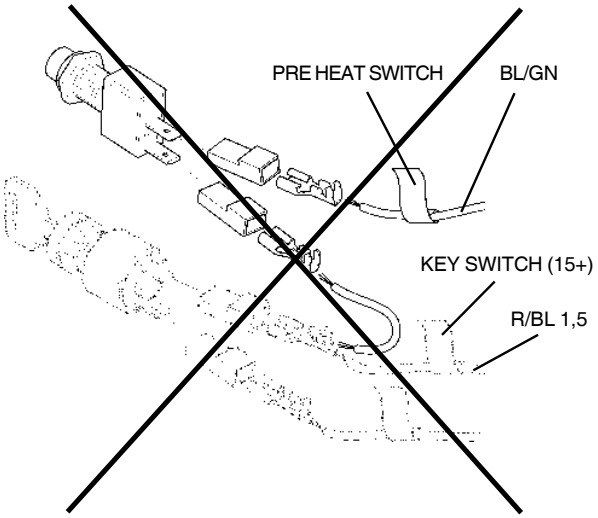

Synchronization/load distribution

The system is designed to suit the GAC synchronization and load distribution system. Interface module EAM 122 must be used to connect this system.

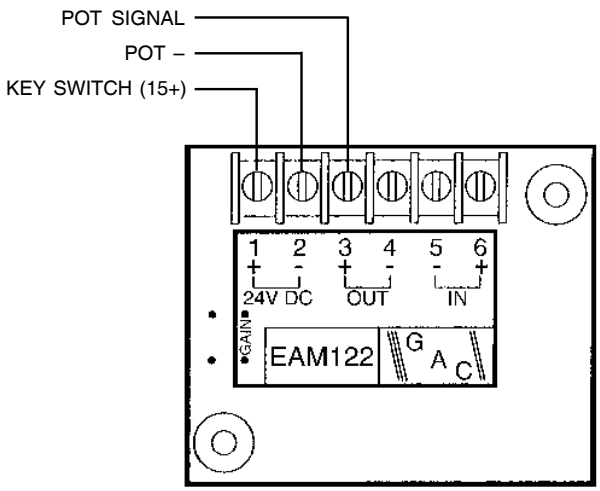

System reset

A system reset is used to delete fault codes which occurred during installation. For example, an incorrectly connected warning lamp will generate a fault code if it is removed when system voltage is switched on. This fault code is erased if a system reset is done and the lamp will be identified with its correct function.

A system reset restores, identifies and stores the current system configuration.

NOTE! Always finish off an engine installation by doing a system re-set.

A system reset must also be done after a frequency change.

Procedure

1. Press the “Diagnostic button” and keep it depressed when system voltage is switched on. Keep it depressed for 2-3 seconds after system voltage has been switched on.

   The engine is now in “system reset mode”.

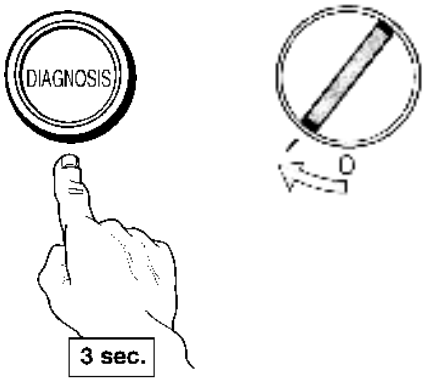

2. The system reset is completed by switching system voltage off.

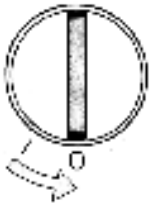

Wiring diagram

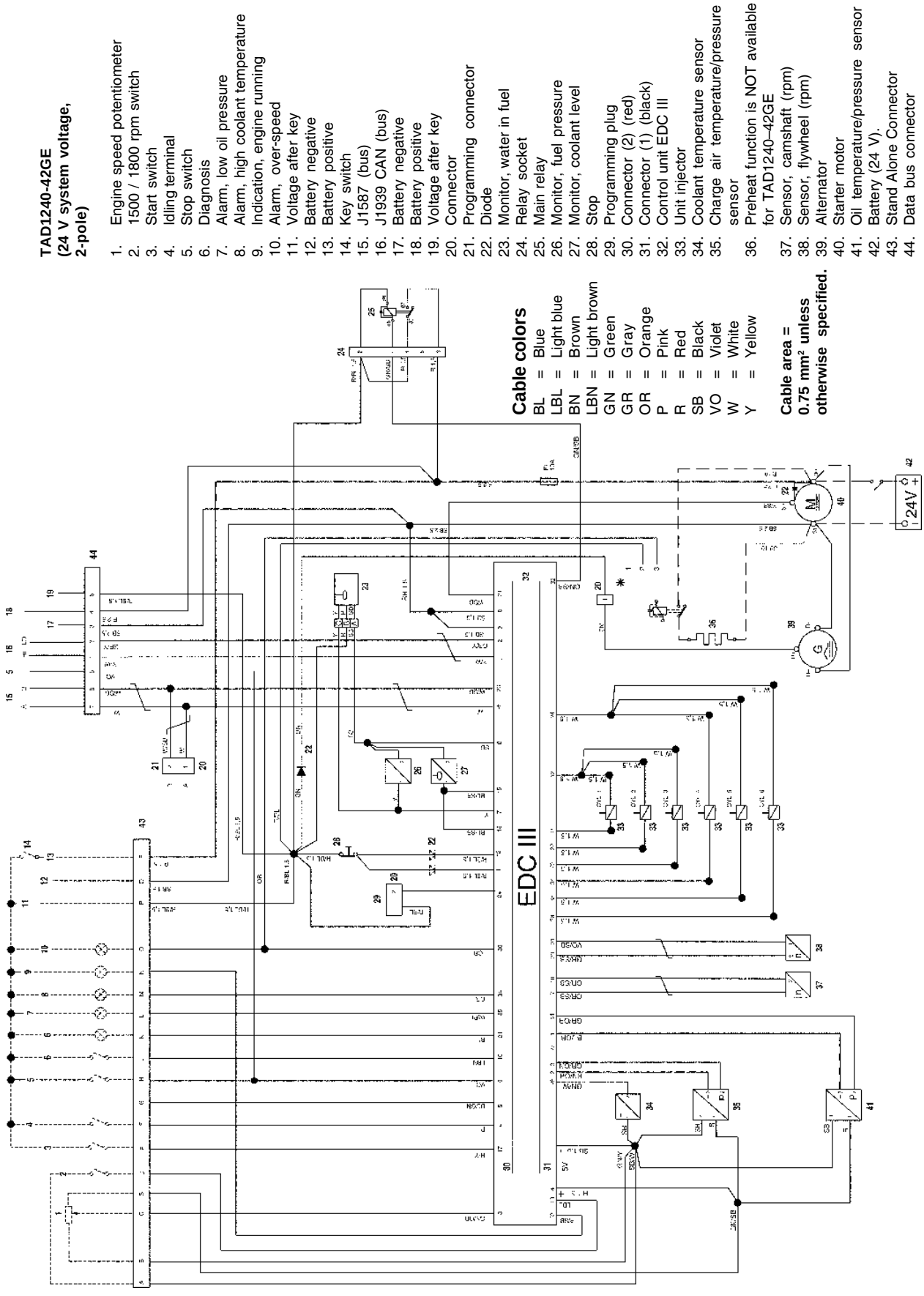

Katolight Service - Master Repair Manual - Page 2638

Parameter setting

Connection, parameter tool

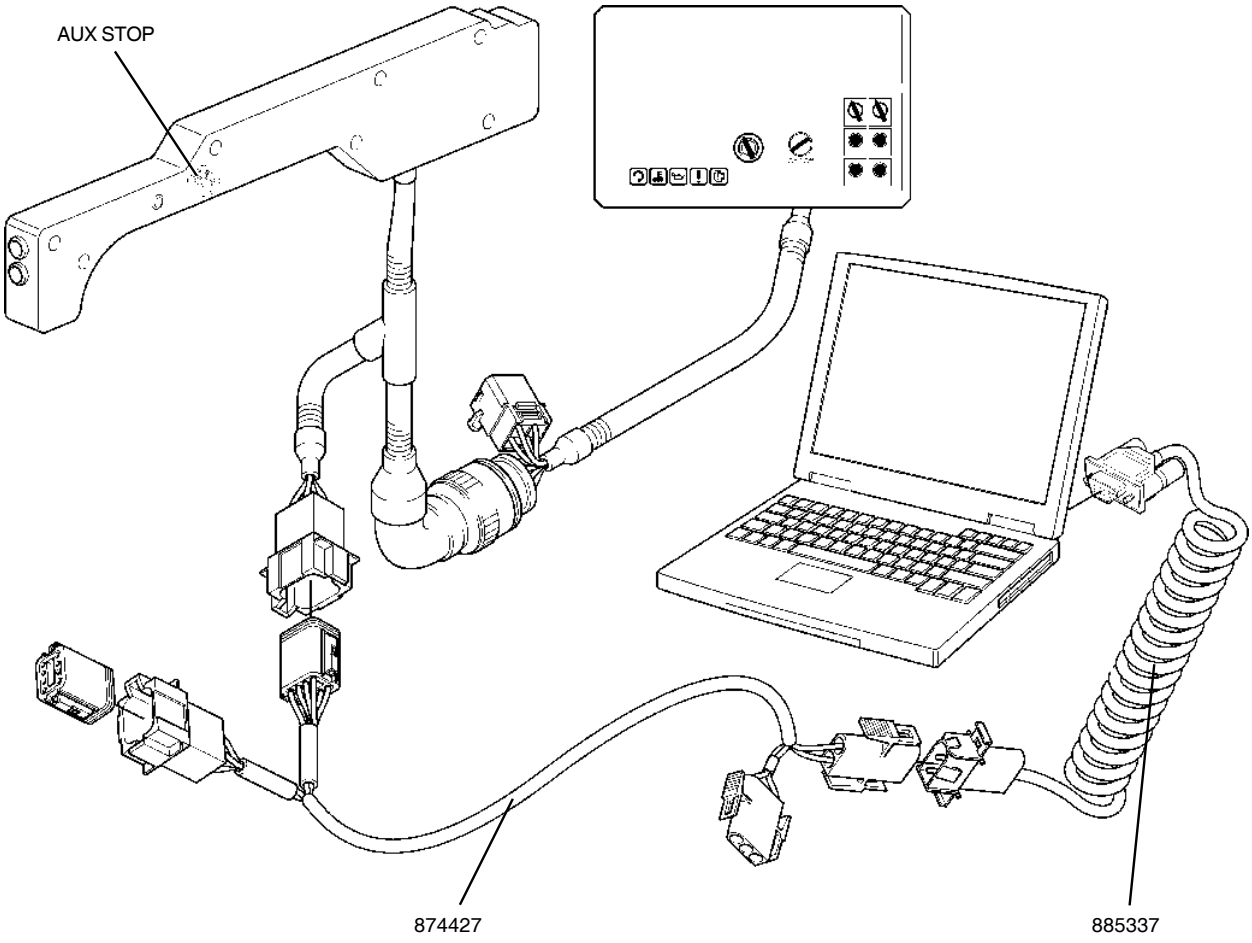

Operation

Connect your laptop as above. Use T-piece, part no. 874427 and communication cable part no. 885337.

Install the “Parameter setting tool” software.

Switch the ignition (do **not** start the engine)

Start the parameter setting tool and follow the instructions in the accompanying manual.

The tool shows the parameters which can be connected on that engine, also see the next page.

NOTE! Finish programming by switching off the ignition with the “AUX STOP” button.

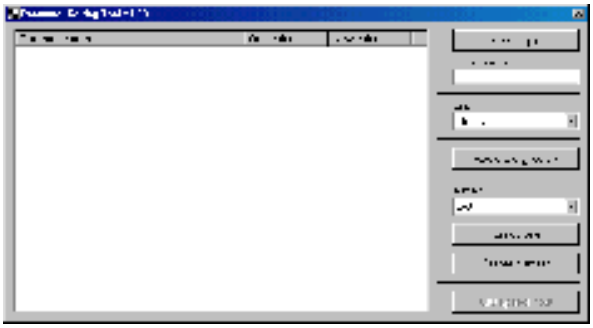

Adjustable parameters TAD1240–42GE (Standalone)

NOTE! Some parameters require special authorization.

Regulation droop

Selects the amount of droop to be used (percent).

Min. value	0 %
Default value	0 %
Max. value	8 %

Alarm limit for oil temperature

The warning lamp is lit at this temperature.

Min. value	120 °C (248 °F)
Default value	125 °C (257 °F)
Max. value	130 °C (266 °F)

Lamp test

This parameter selects whether a lamp test should be done when the system starts up.

Alternative positions “Off” or “On”
Default value “On”

Over-speed limit

Percentage above normal speed when the over-speed warning is activated.

Min. value	10 %
Default value	20 %
Max. value	20 %

Over-speed shut off

Parameter which selects whether the engine should be stopped if it overspeeds.

Alternative positions “Off” or “On”
Default value “Off”

Alarm limit for coolant temperature

The warning lamp is lit at this temperature.

Min. value	95 °C (203 °F)
Default value	98 °C (208 °F)
Max. value	101 °C (214 °F)

Idling speed.

Setting idling speed

Min. value	600 rpm
Default value	900 rpm
Max. value	1200 rpm

Stop EMS: connected to system voltage at

Stop input on EMS unit connected to system voltage at “Run” or “Stop”.

Default value “Run”

Engine protection charge air temperature

Chooses whether engine protection should be activated in relation to high charge air temperature.

Alternative positions “Off” or “On”
Default value “On”

Engine protection coolant level

Chooses whether engine protection should be activated in relation to low coolant level.

Alternative positions “Off” or “On”
Default value “On”

Engine protection coolant temperature

Chooses whether engine protection should be activated in relation to high coolant temperature.

Alternative positions “Off” or “On”
Default value “On”

Engine protection oil pressure

Chooses whether engine protection should be activated in relation to low oil pressure.

Alternative positions “Off” or “On”
Default value “On”

Engine protection oil temperature

Chooses whether engine protection should be activated in relation to high oil temperature.

Alternative positions “Off” or “On”
Default value “On”

Primary engine speed

Selects the engine speed to be used when the frequency setting switch is not used.

Alternative speed	1500 rpm or 1800 rpm
Default speed	Depending on the specification ordered.

NOTE! After the primary speed is changed, a system reset must also be done, please refer to the “System reset” chapter.

TAD1240–42GE (CIU)

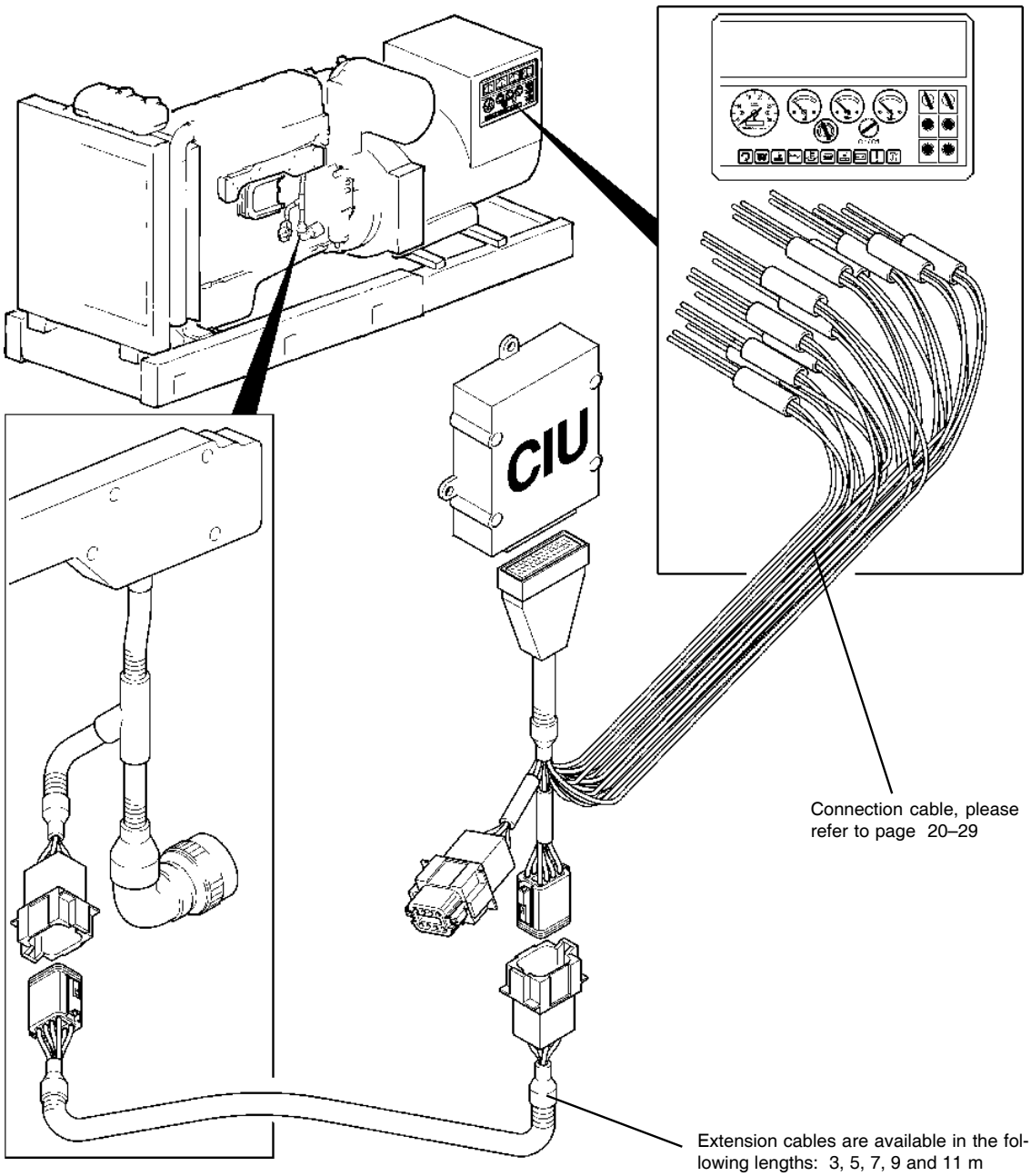

General information

The installation must be planned very thoroughly and done with the greatest care.

The connection cable between the engine and the instrument panel must be securely clamped. Remember that the connectors must also be supported so that they are not subjected to any tension.

Cables must not be run too close to hot components on the engine or close to any other source of heat. Make sure that it is protected from mechanical wear, sharp edges and water splashes. If necessary, run the cable through protective conduits.

Avoid making joints in the system as far as possible. Cables and any joints must be accessible for inspection and service

NOTE! The connectors must be installed “dry”, they must not be packed with Vaseline etc.

Connection

Engine management

(please refer to wiring diagram on page 29)

Starter switch (system voltage ON / OFF)

NOTE! The starting current for engine system voltage (control unit) is 10 A. Make sure that other components in the installation are dimensioned for this current density.

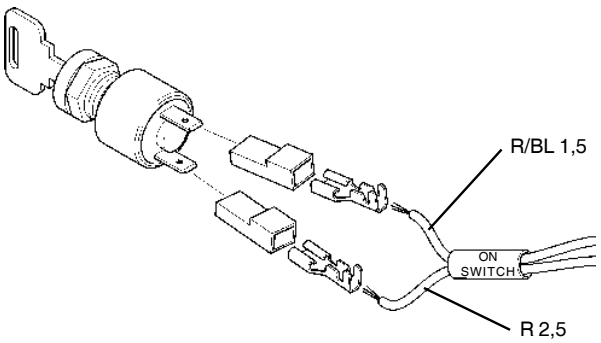

Start switch

Contact type, closing (NO), spring biased.

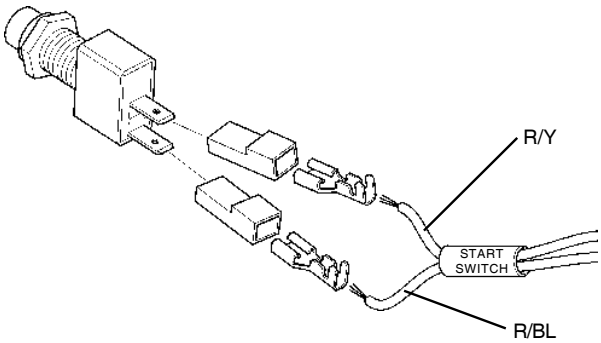

Stop switch

Contact type, closing (NO), spring biased.

When parameters are chosen, live during operation can be chosen.

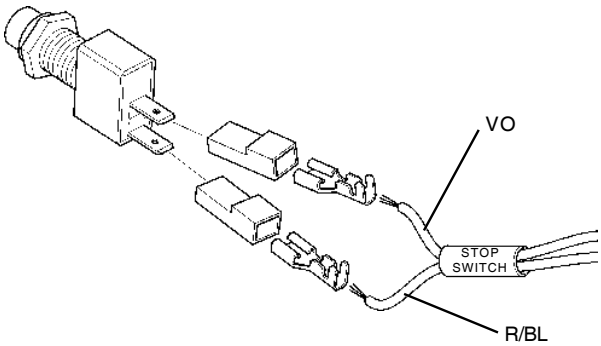

Engine speed potentiometer

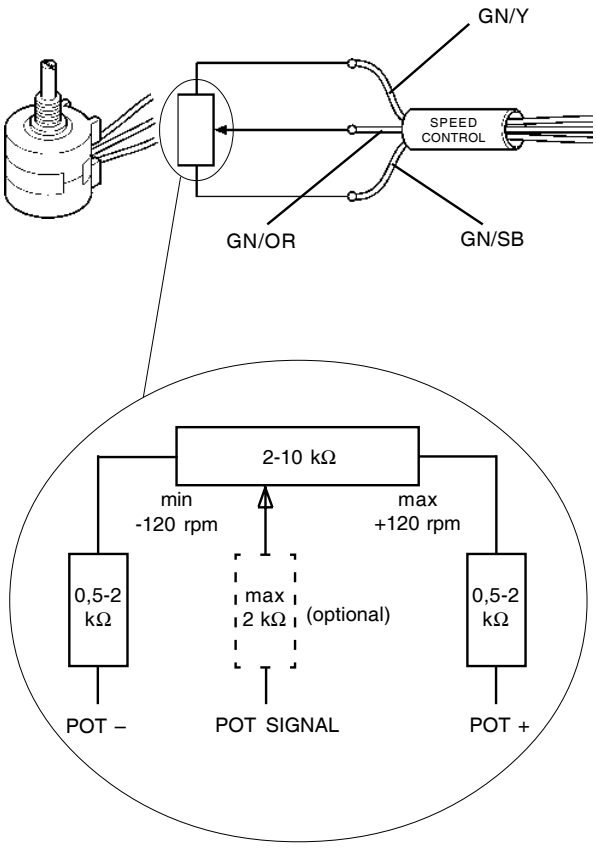

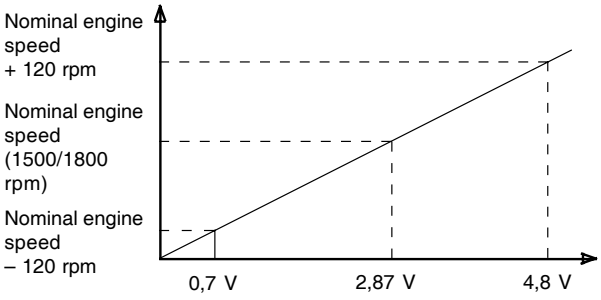

Voltages lower than 0.7 V, or higher than 4.8 V are not permissible.

1500 / 1800 rpm switch

This function permits frequency to be changed from 50 to 60 Hz.

Contact type, two-position (NO).

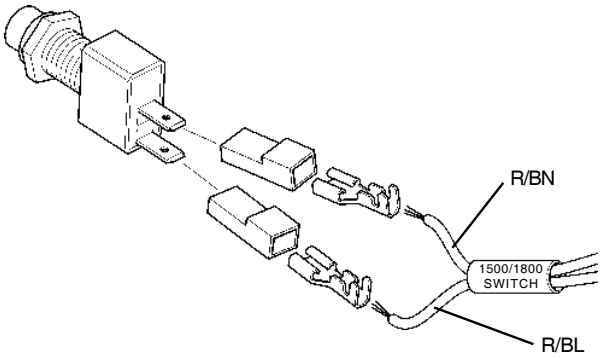

Katolight Service - Master Repair Manual - Page 2643

Idling button

Contact type, two-position (NO).

Closed contact gives idling speed (900 rpm).

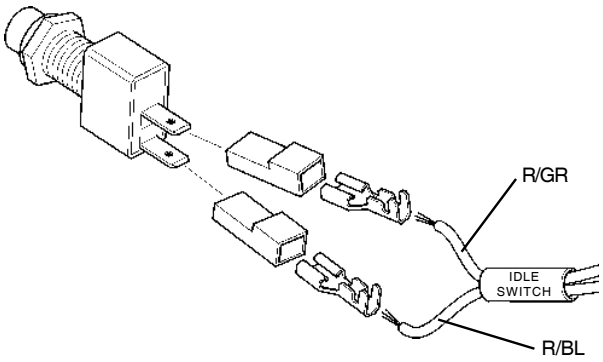

Regulator connector

NOTE! This preheating function not used on the TAD1240–42GE.

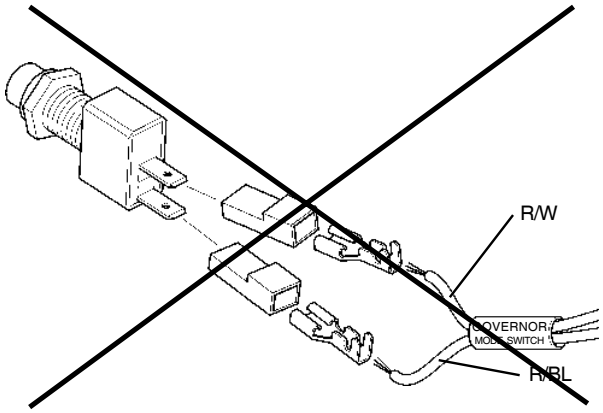

Warning and indication lamps

(please refer to wiring diagram on page 29)

Alarm, low oil pressure

Max. power 3 W
Voltage 24 V

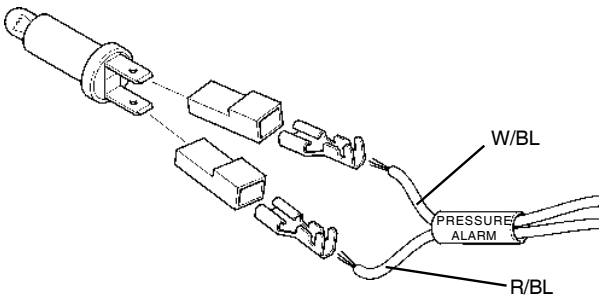

Alarm, high oil temperature

Max. power 3 W
Voltage 24 V

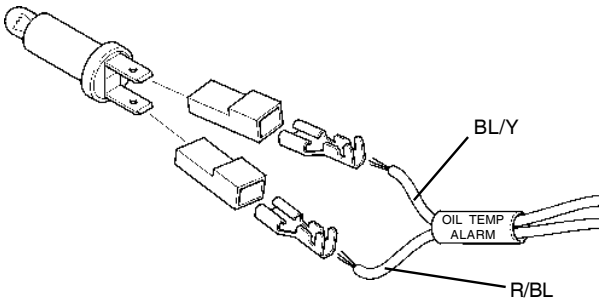

Alarm, high coolant temperature

Max. power 3 W
Voltage 24 V

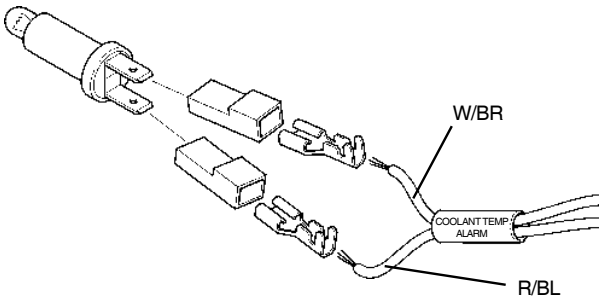

Alarm, low coolant level

Max. power 3 W
Voltage 24 V

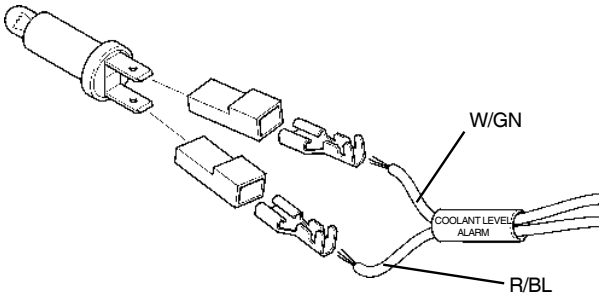

Fuel alarm

Max. power 3 W
Voltage 24 V

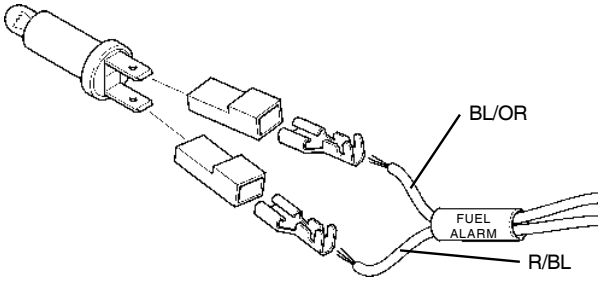

Charge indication

Max. power 3 W
Voltage 24 V

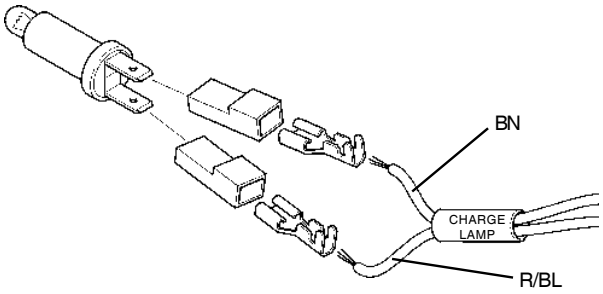

Overspeed indication

Max. power 3 W
Voltage 24 V

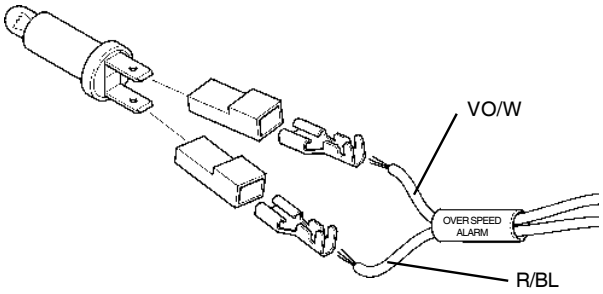

Operation indication

Max. power 3 W
Voltage 24 V

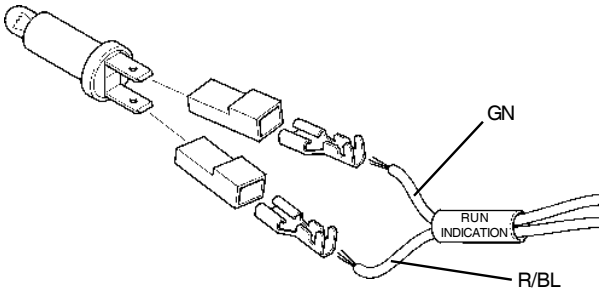

Diagnostic lamp

Max. power 3 W
Voltage 24 V

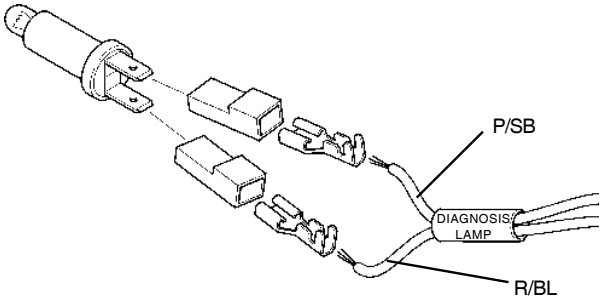

Pre-heating indication

NOTE! Preheating **not** connected on TAD1240–42GE.

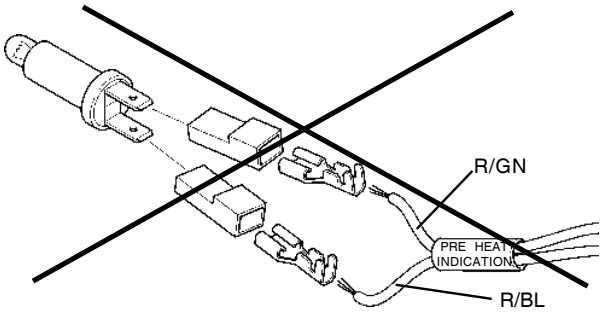

Instruments

(please refer to wiring diagram on page 29)

Tachometer

Use Volvo Penta's (VDO) universal tachometer, graduated 0–2600 rpm.

Set code 14, please refer to installation instruction 7739513-5.

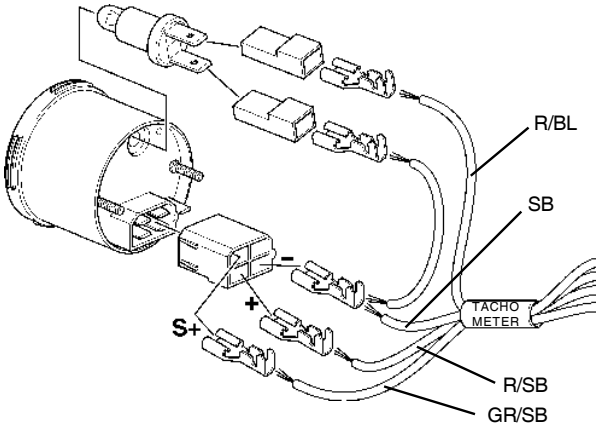

Oil pressure instrument

Use Volvo Penta's (VDO) oil pressure instrument, graduated 0-10 bar (0-145 PSI).

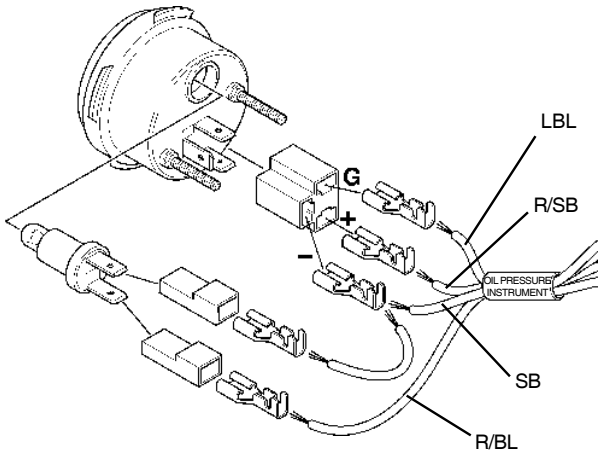

Oil temperature instrument

Use Volvo Penta's (VDO) oil temperature instrument, graduated 40-150 °C (104-302 °F).

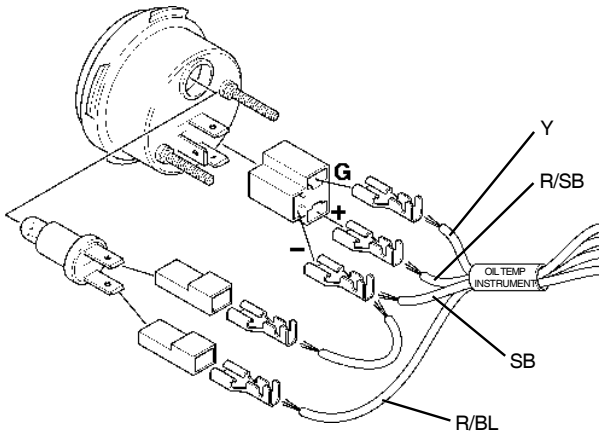

Coolant temperature instrument

Use Volvo Penta's (VDO) coolant temperature instrument, graduated 40-120°C (104-248 °F).

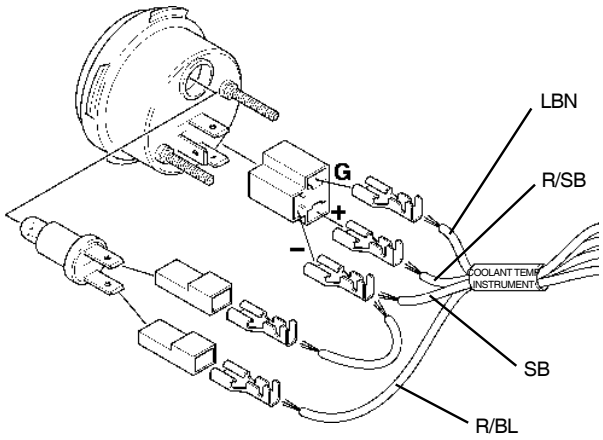

Katolight Service - Master Repair Manual - Page 2648

Other

(please refer to wiring diagram on page 29)

Diagnostic connector

Contact type, closing (NO), spring biased.

To read the fault codes, please refer to chapter “Fault tracing”.

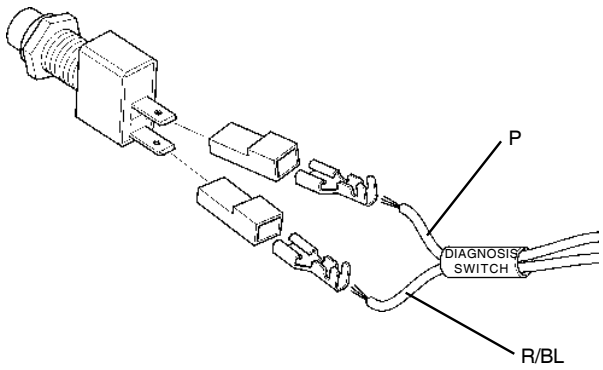

Pre-heating switch

NOTE! Preheating **not** connected on TAD1240–42GE.

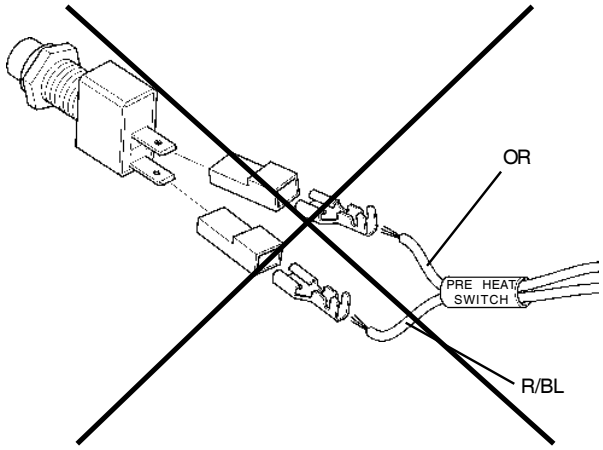

Synchronization/load distribution

The system is designed to suit the GAC synchronization and load distribution system. Interface module EAM 122 must be used to connect this system.

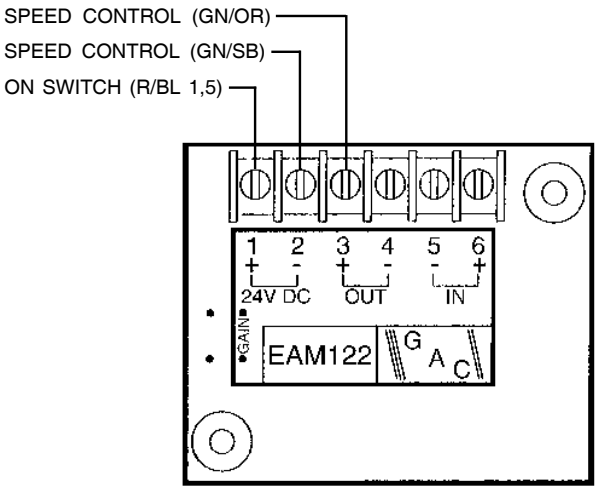

System reset

A system reset is used to delete fault codes which occurred during installation. For example, an incorrectly connected warning lamp will generate a fault code if it is removed when system voltage is switched on. This fault code is erased if a system reset is done and the lamp will be identified with its correct function.

A system reset restores, identifies and stores the current system configuration.

NOTE! Always finish off an engine installation by doing a system re-set.

NOTE! A system reset must also be done after a frequency change.

Procedure

1. Press the “Diagnostic button” and keep it depressed when system voltage is switched on. Keep it depressed for 2-3 seconds after system voltage has been switched on.

   The engine is now in “system reset mode”.

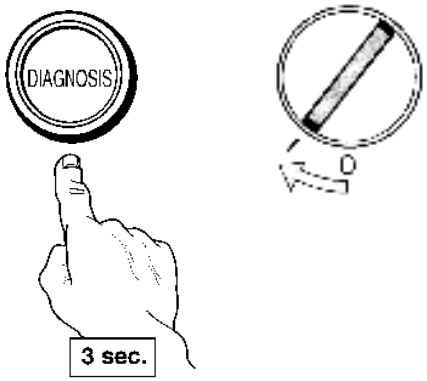

2. The system reset is completed by switching system voltage off.



Katolight Service - Master Repair Manual - Page 2650

Wiring diagram

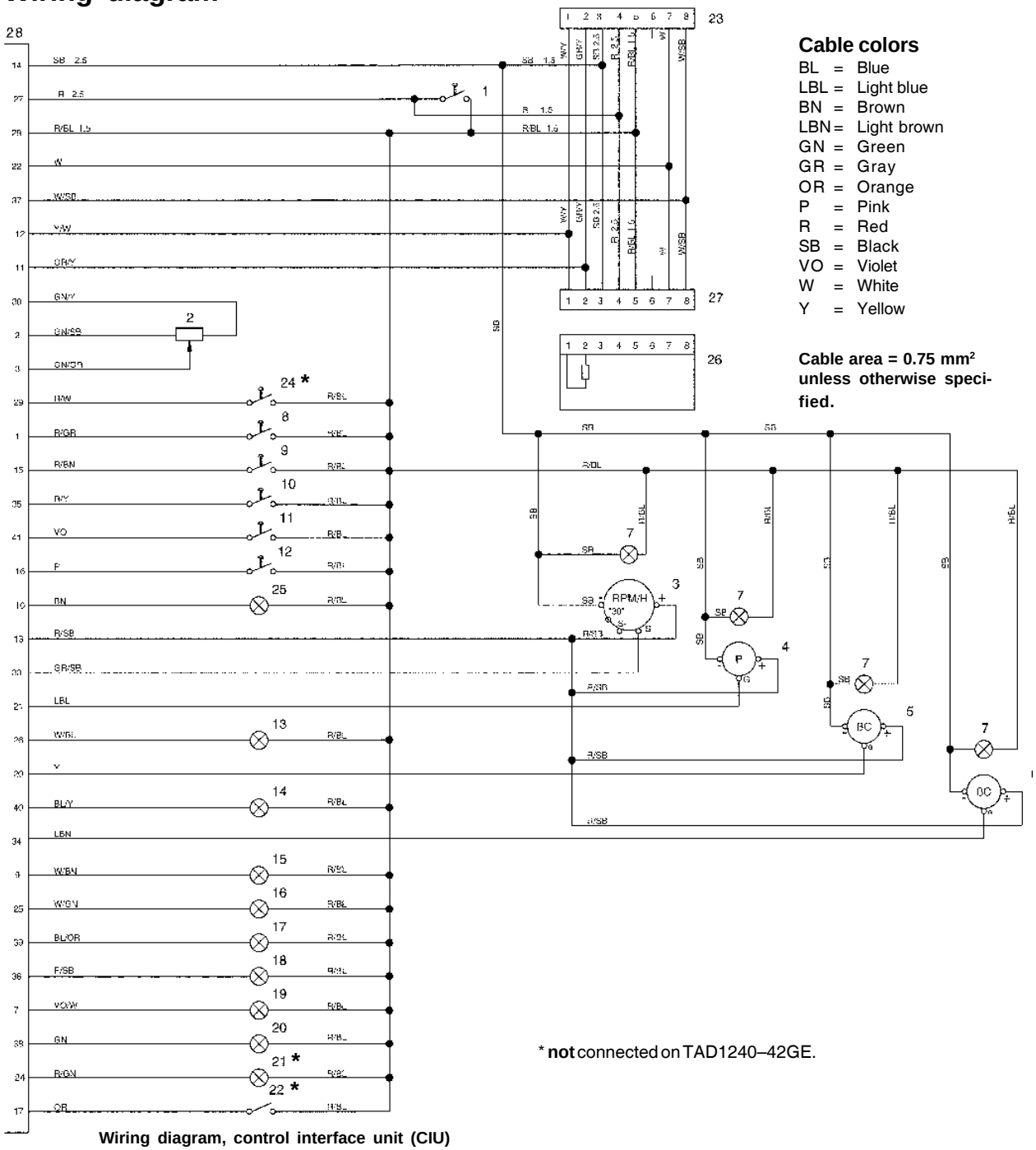

Cable colors

BL = Blue
LBL = Light blue
BN = Brown
LBN = Light brown
GN = Green
GR = Gray
OR = Orange
P = Pink
R = Red
SB = Black
VO = Violet
W = White
Y = Yellow

Cable area = 0.75 mm² unless otherwise specified.

* **not** connected on TAD1240–42GE.

Wiring diagram, control interface unit (CIU)

1. Key switch, driving current (15+)
2. Engine speed potentiometer
3. Tachometer (code 14)
4. Oil pressure, instrument
5. Oil temperature, instrument
6. Coolant temperature, instrument
7. Instrument lighting
8. Idling contact, two-way
9. 1500 / 1800 rpm switch, two-way
10. Starter contact, spring biased
11. Stop switch, spring biased
12. Diagnostic contact, spring biased
13. Alarm, low oil pressure
14. Alarm, high oil temperature
15. Alarm, high coolant temperature
16. Alarm, low coolant level
17. Fuel alarm
18. Diagnostic lamp
19. Overspeed indication
20. Operation indication
21. Preheating indication (**not** connected on TAD1240–42GE).
22. Preheating contact (**not** connected on TAD1240–42GE).
23. 8-pin Deutsch connector, pin
24. Regulator switch (**not** connected on TAD1240–42GE).
25. Charge indication
26. Termination resistor 120 Ohm
27. 8-pin Deutsch connector, socket
28. Control Interface Unit (CIU)

Parameter setting

Connection, parameter tool

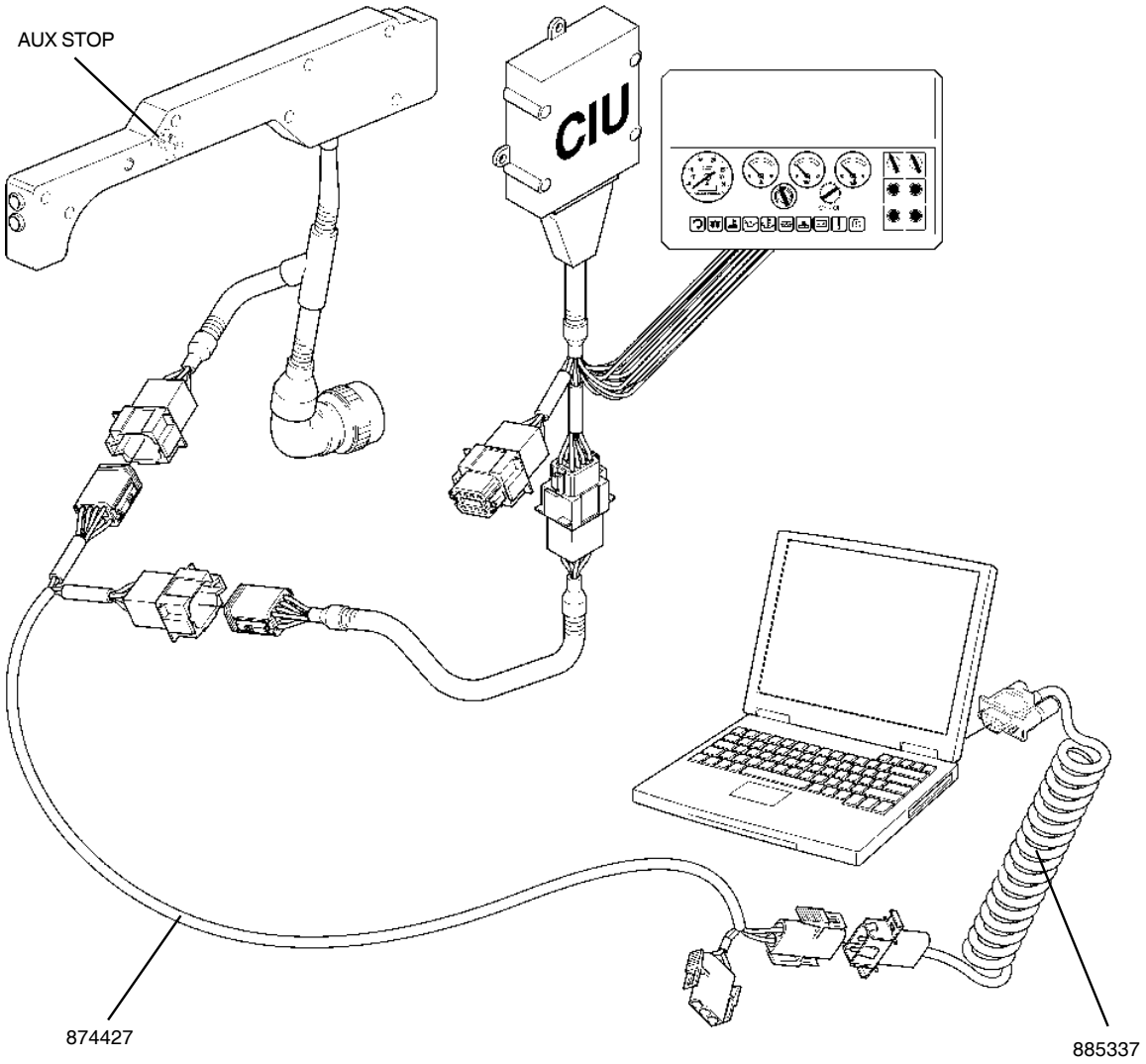

Operation

Connect your laptop as above. Use T-piece, part no. 874427 and communication cable part no. 885337.

Install the “Parameter setting tool” software.

Switch the ignition (do **not** start the engine)

Start the parameter setting tool and follow the instructions in the accompanying manual.

The tool shows the parameters which can be connected on that engine, also see the next page.

NOTE! Finish programming by switching off the ignition with the “AUX STOP” button.

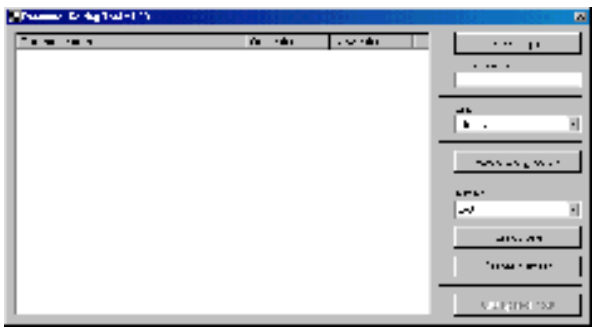

Adjustable parameters TAD1240–42GE (CIU)

NOTE! Some parameters require special authorization.

Regulation droop

Selects the amount of droop to be used (percent).

Min. value	0 %
Default value	0 %
Max. value	8 %

Stop CIU: connected to system voltage at

Stop input on CIU unit connected to system voltage at “Run” or “Stop”.

Default value	“Stop”

Alarm limit for oil temperature

The warning lamp is lit at this temperature.

Min. value	120 °C (248 °F)
Default value	125 °C (257 °F)
Max. value	130 °C (266 °F)

Lamp test

This parameter selects whether a lamp test should be done when the system starts up.

Alternative positions “Off” or “On”
Default value “On”

Over-speed limit

Percentage above normal speed when the over-speed warning is activated.

Min. value	10 %
Default value	20 %
Max. value	20 %

Over-speed shut off

Parameter which selects whether the engine should be stopped if it overspeeds.

Alternative positions “Off” or “On”
Default value “Off”

Alarm limit for coolant temperature

The warning lamp is lit at this temperature.

Min. value	95 °C (203 °F)
Default value	98 °C (208 °F)
Max. value	101 °C (214 °F)

Idling speed.

Setting idling speed

Min. value	600 rpm
Default value	900 rpm
Max. value	1200 rpm

Engine protection charge air temperature

Chooses whether engine protection should be activated in relation to high charge air temperature.

Alternative positions “Off” or “On”
Default value “On”

Engine protection coolant level

Chooses whether engine protection should be activated in relation to low coolant level.

Alternative positions “Off” or “On”
Default value “On”

Engine protection coolant temperature

Chooses whether engine protection should be activated in relation to high coolant temperature.

Alternative positions “Off” or “On”
Default value “On”

Engine protection oil pressure

Chooses whether engine protection should be activated in relation to low oil pressure.

Alternative positions “Off” or “On”
Default value “On”

Engine protection oil temperature

Chooses whether engine protection should be activated in relation to high oil temperature.

Alternative positions “Off” or “On”
Default value “On”

Primary engine speed

Selects the engine speed to be used when the frequency setting switch is not used.

Alternative speed	1500 rpm or 1800 rpm
Default speed	Depending on the specification ordered.

NOTE! After the primary speed is changed, a system reset must also be done, please refer to the “System reset” chapter.

TWD1240VE (Standalone)

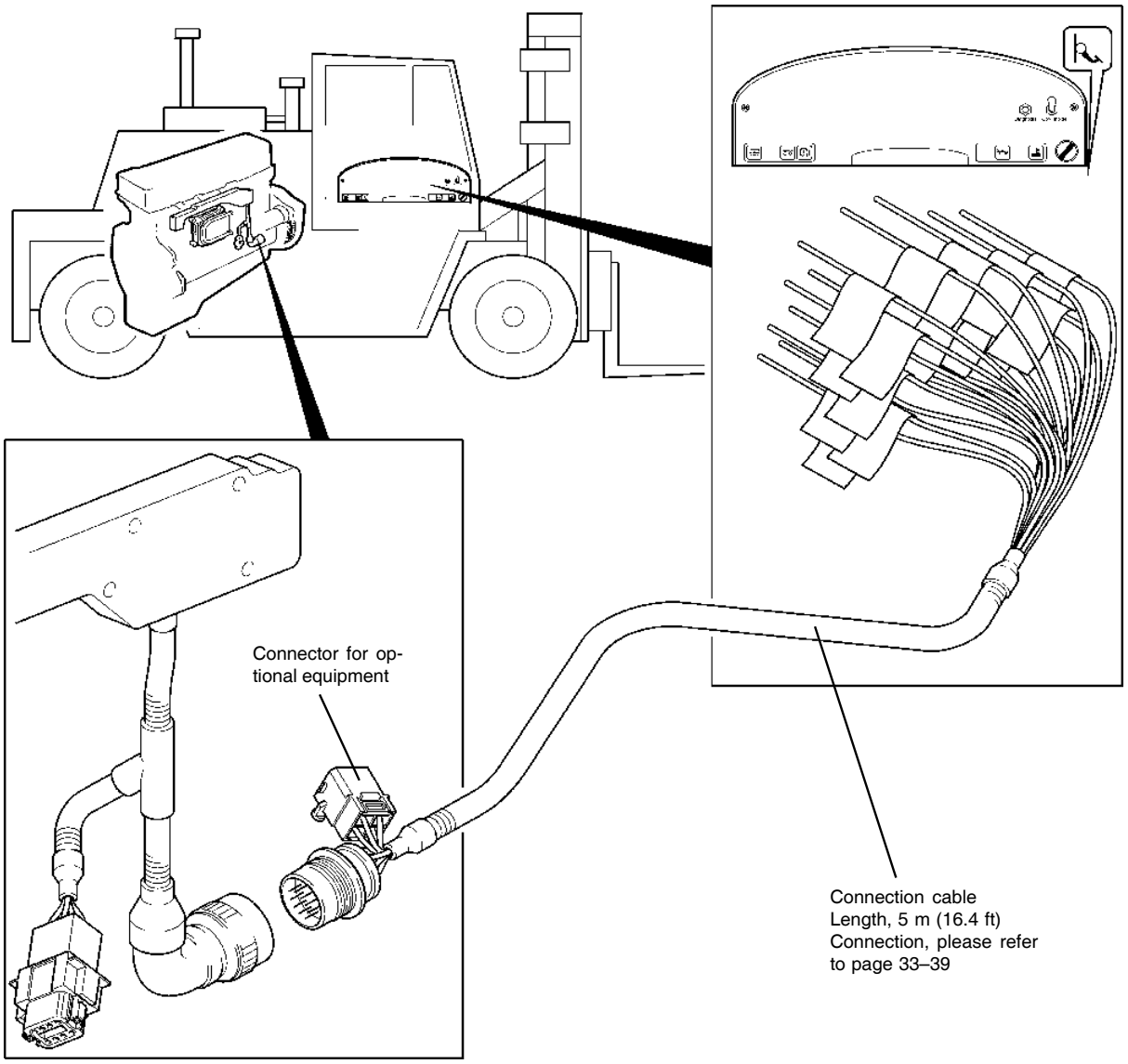

General information

The installation must be planned very thoroughly and done with the greatest care.

The connection cable between the engine and the instrument panel must be securely clamped. Remember that the connectors must also be supported so that they are not subjected to any tension.

Cables must not be run too close to hot components on the engine or close to any other source of heat. Make sure that it is protected from mechanical wear, sharp edges and water splashes. If necessary, run the cable through protective conduits.

Avoid making joints in the system as far as possible. Cables and any joints must be accessible for inspection and service

NOTE! The connectors must be installed “dry”, they must not be packed with Vaseline etc.

Connector for optional equipment

The connection cable is provided with four extra conductors for connection of instrument sensors etc.

The four-pin connector is marked “Extra”. The four cables are marked “T”, “U”, “V” and “W”.

Katolight Service - Master Repair Manual - Page 2654

Connection

Engine management

(please refer to wiring diagram on page 39)

Starter switch

The starter switch is used to connect the system voltage, pre-heating function, starter function and stop function.

Position “0” = system voltage switched off

Position “I” = system voltage switched on

Position “II” = pre-heating on (spring biased)

Position “III” = starter motor engaged (spring biased)

Position “S” = stop function on (spring biased)

NOTE! The starting current for engine system voltage (control unit) is 10 A. Make sure that other components in the installation are dimensioned for this current density.

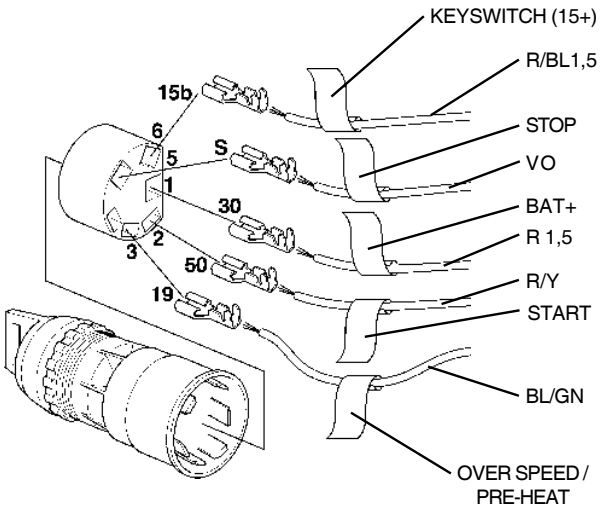

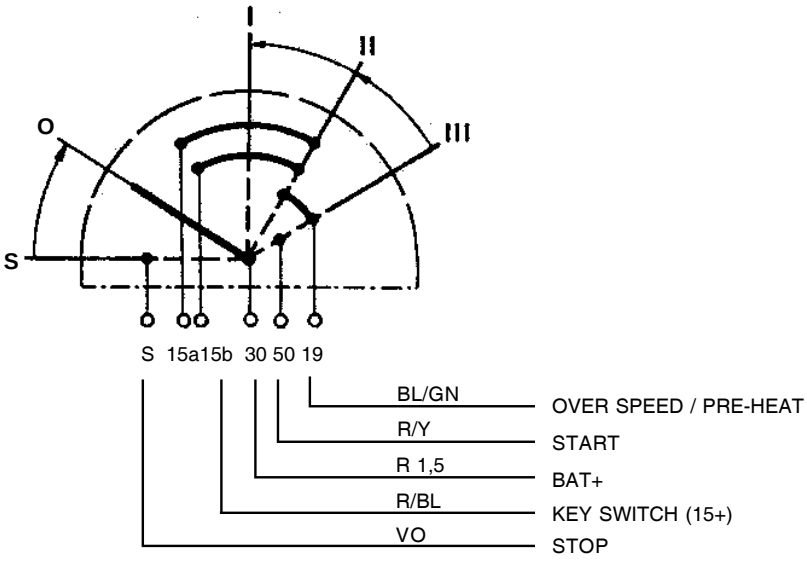

Droop contact

Contact type, two-position (NO).

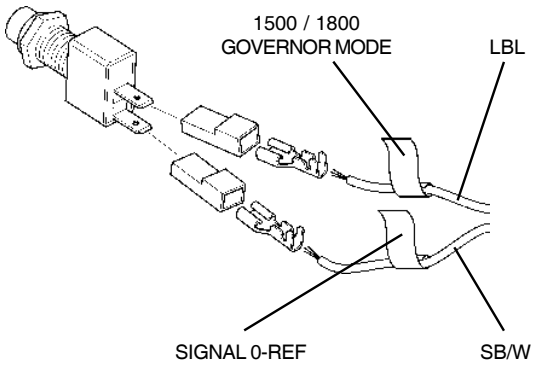

Accelerator pedal

Idling: 0.3 -1.9 V (Default value 1.60 V)

Full throttle: 1.9 -4.7 V (Default value 3.75 V)

If an accelerator pedal with different resistance and voltage values is used, the control unit must be re-calibrated with the parameter tool, please refer to “Parameter setting”.

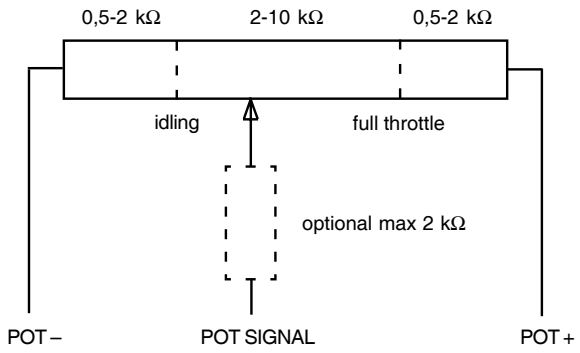

Idling switch

The accelerator has a built-in idling switch, which functions as a “Take you home device” if the potentiometer in the accelerator pedal should fail.

When the pedal is depressed, the contact is closed, and the engine speeds up in intervals to 80% of maximum speed. When the pedal is released, the contact opens and the engine falls back to idling speed.

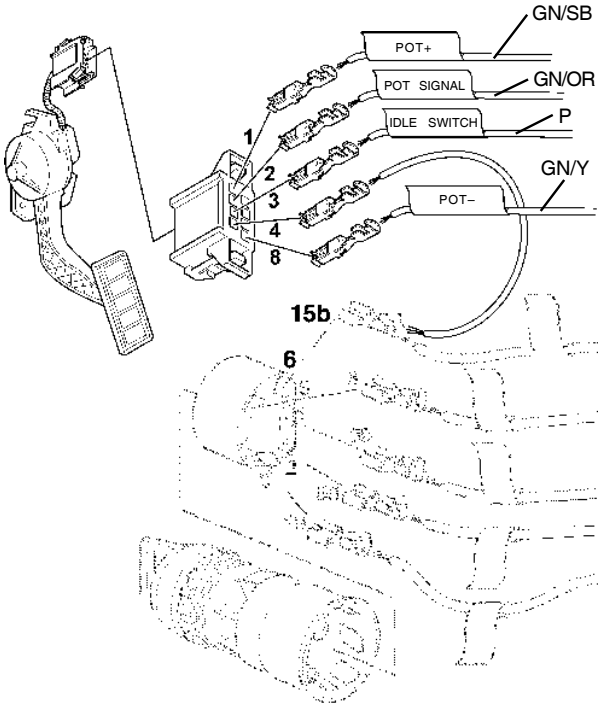

Warning and indication lamps

(please refer to wiring diagram on page 39)

Alarm, low oil pressure

Max. power 3 W
Voltage 24 V

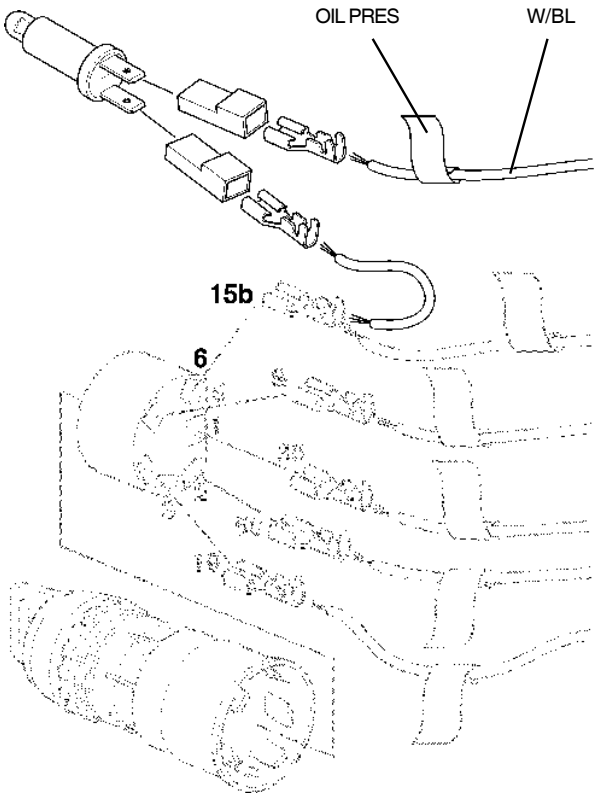

Alarm, high coolant temperature

Max. power 3 W
Voltage 24 V

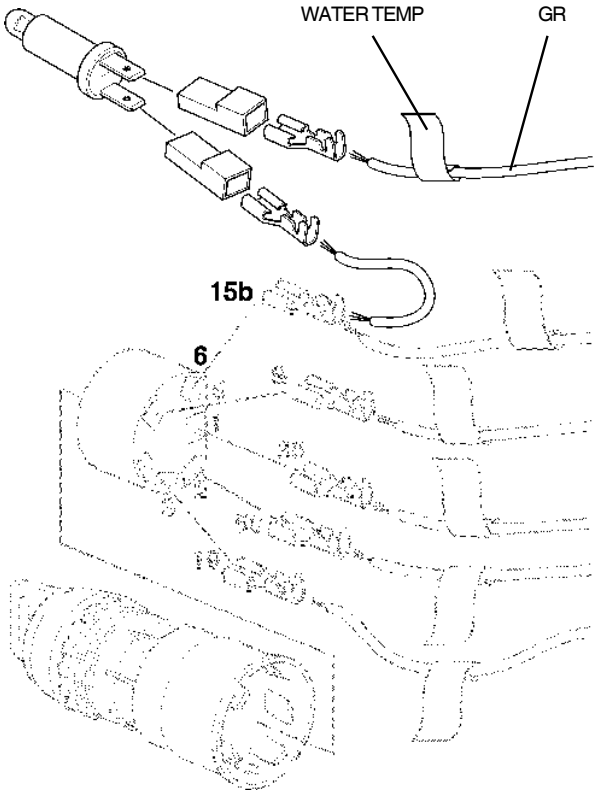

Alarm, low coolant level

Max. power 3 W
Voltage 24 V

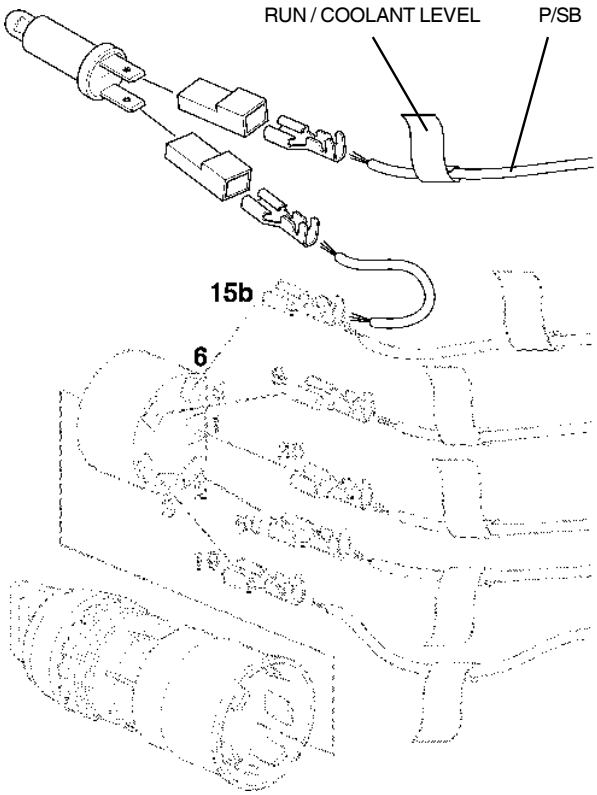

Diagnostic lamp

Max. power 3 W
Voltage 24 V

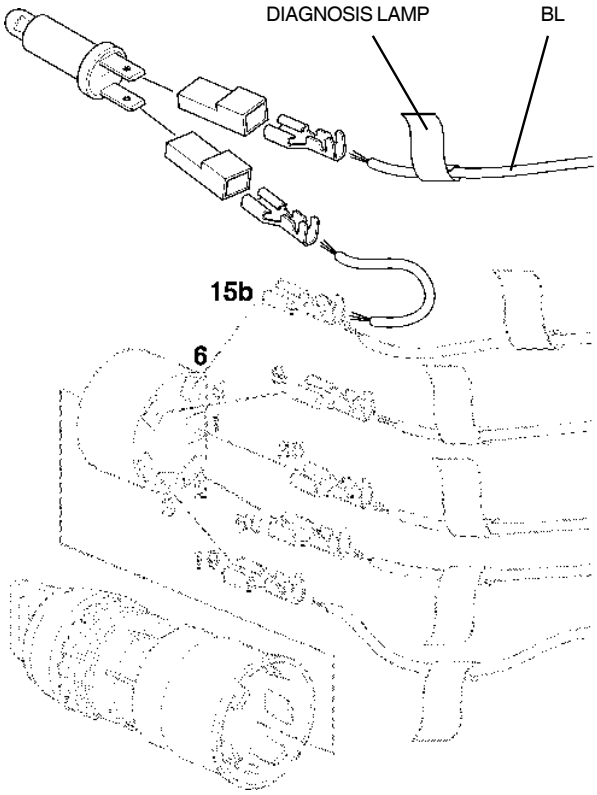

Pre-heating indication

Max. power 3 W
Voltage 24 V

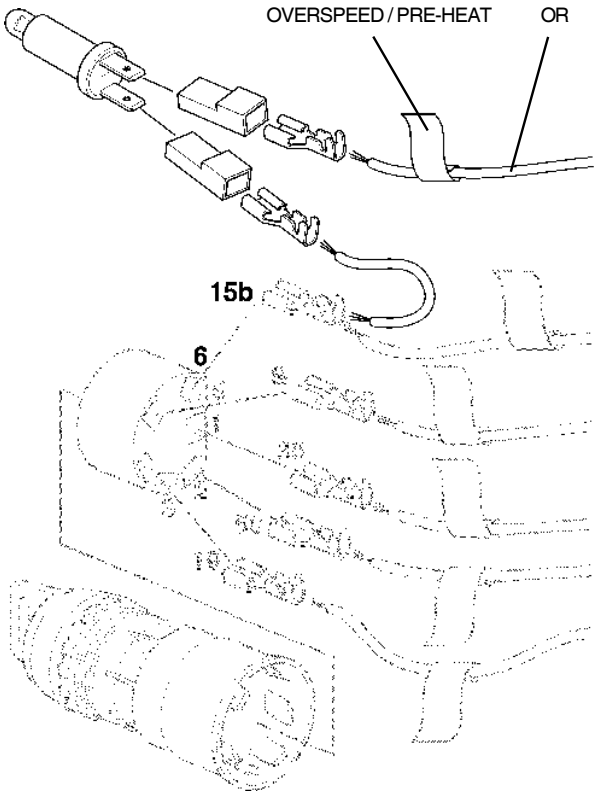

Other

(please refer to wiring diagram on page 39)

Diagnostic button

Contact type, closing (NO), spring biased.

To read the fault codes, please refer to chapter “Fault tracing”.

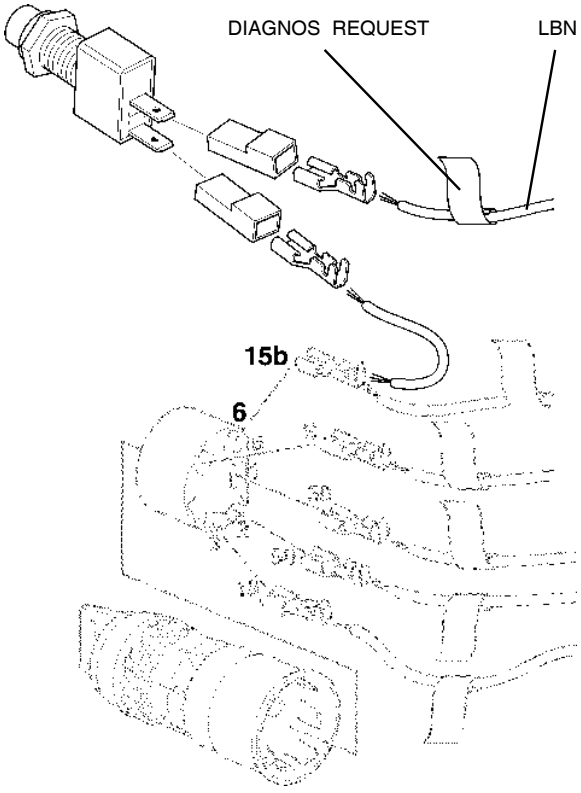

System reset

A system reset is used to delete fault codes which occurred during installation. For example, an incorrectly connected warning lamp will generate a fault code if it is removed when system voltage is switched on. This fault code is erased if a system reset is done and the lamp will be identified with its correct function.

A system reset restores, identifies and stores the current system configuration.

NOTE! Always finish off an engine installation by doing a system re-set.

Procedure

1. Press the “Diagnostic button” and keep it depressed when system voltage is switched on. Keep it depressed for 2-3 seconds after system voltage has been switched on.

   The engine is now in “system reset mode”.

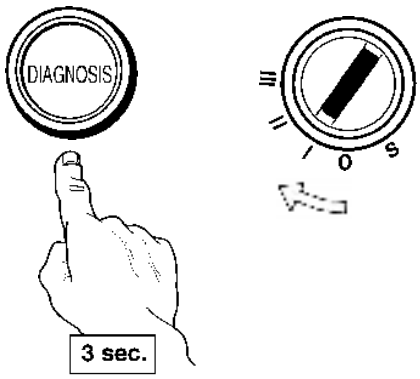

2. The system reset is completed by switching system voltage off.

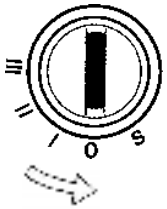

Wiring diagram

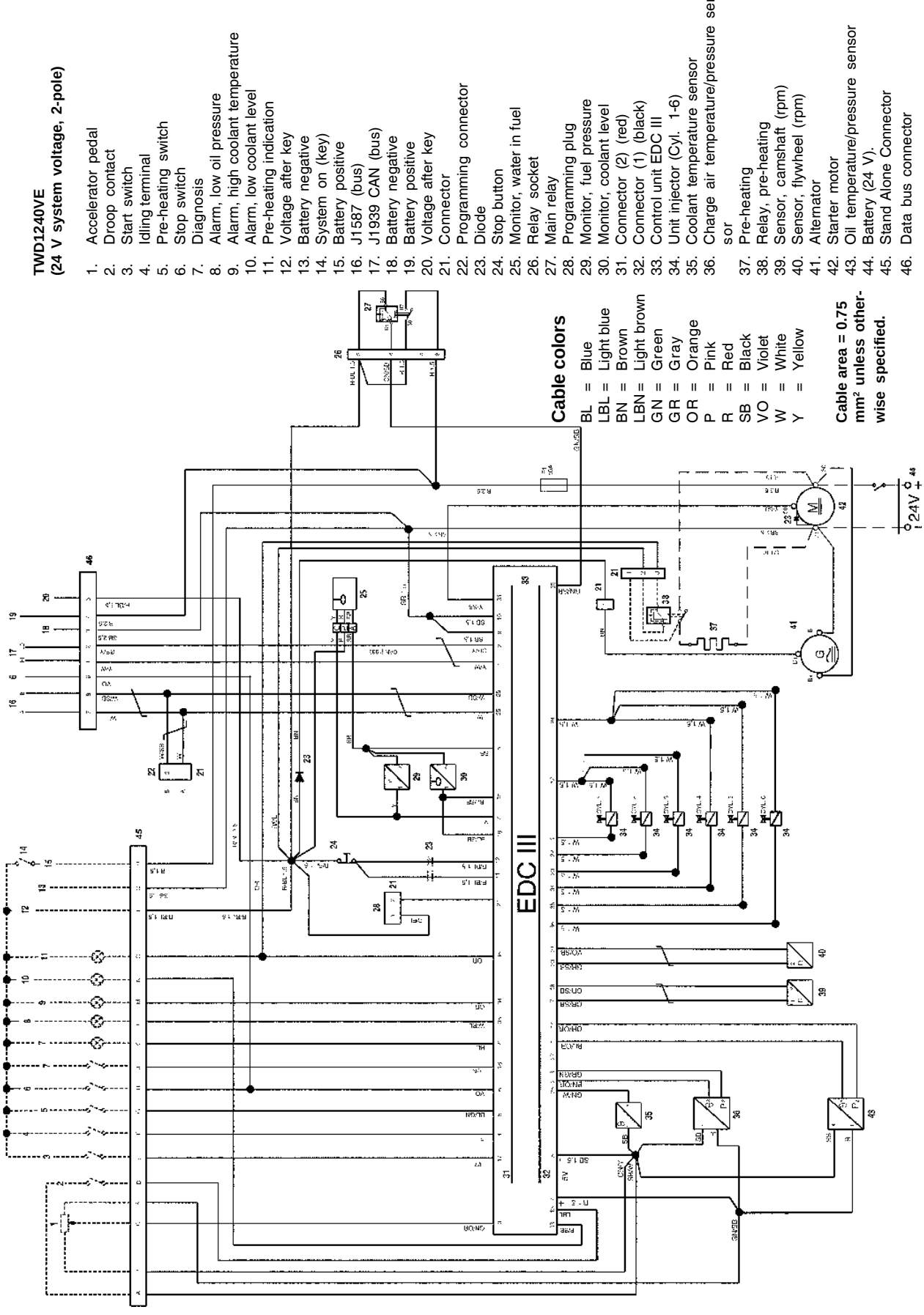

Parameter setting

Connection, parameter tool

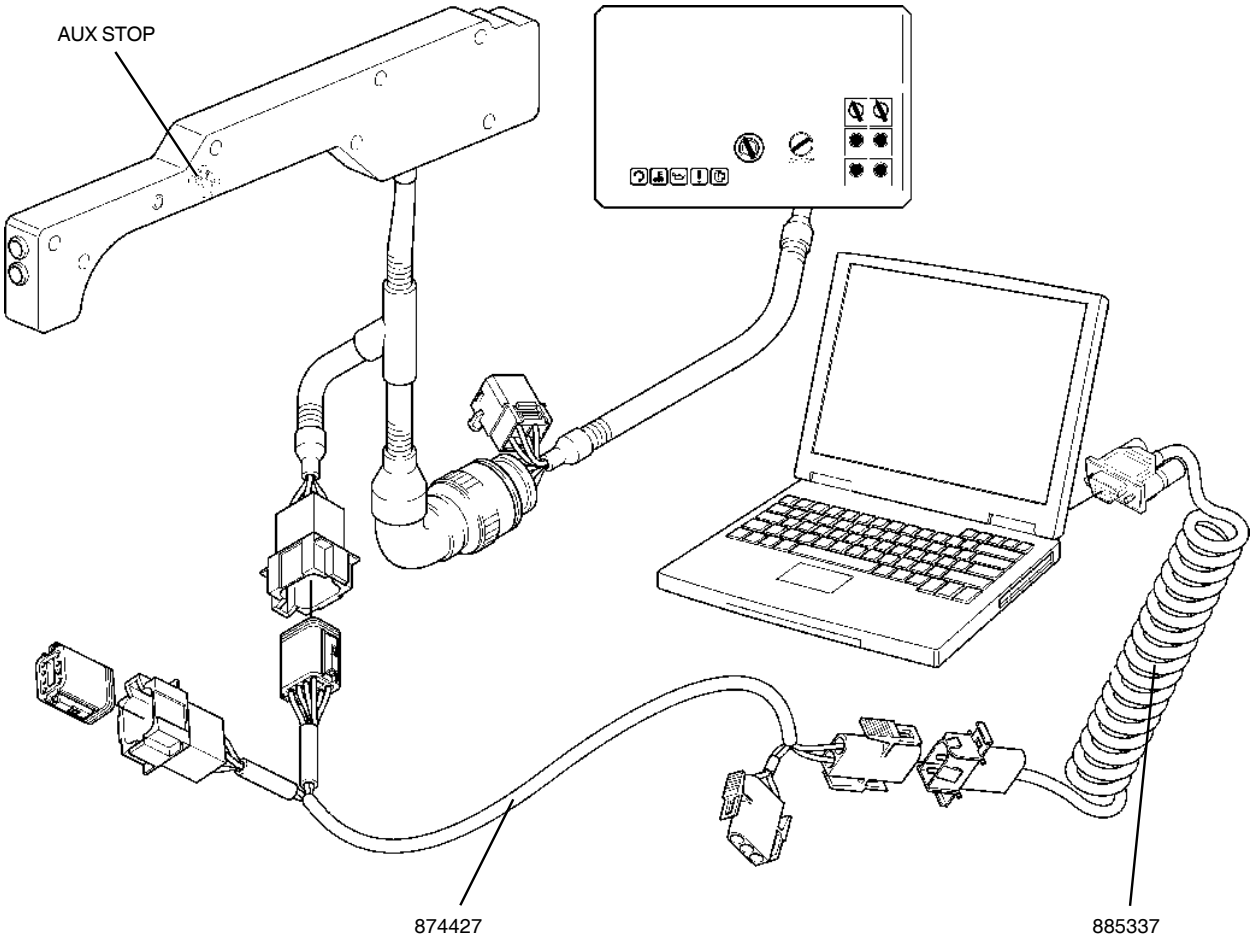

Operation

Connect your laptop as above. Use T-piece, part no. 874427 and communication cable part no. 885337.

Install the “Parameter setting tool” software.

Switch the ignition (do **not** start the engine)

Start the parameter setting tool and follow the instructions in the accompanying manual.

The tool shows the parameters which can be connected on that engine, also see the next page.

NOTE! Finish programming by switching off the ignition with the “AUX STOP” button.

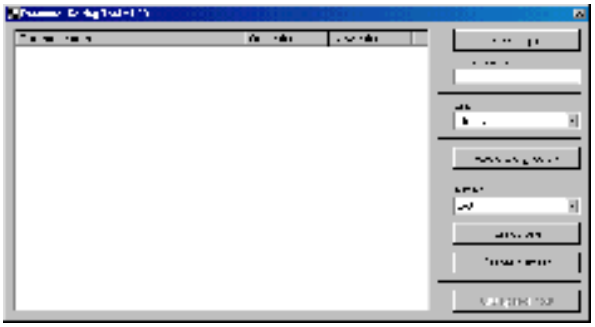

Adjustable parameters TWD1240VE (Standalone)

NOTE! Some parameters require special authorization.

Alarm limit for oil temperature

The warning lamp is lit at this temperature.

Min. value	120 °C (248 °F)
Default value	125 °C (257 °F)
Max. value	130 °C (266 °F)

Lamp test

This parameter selects whether a lamp test should be done when the system starts up.

Alternative positions “Off” or “On”
Default value “On”

Idling voltage EMS

Voltage on the throttle control input on the EMS unit, corresponding to idling.

Min. value	0.3 V
Default value	1.6 V
Max. value	1.9 V

Max. speed voltage, EMS

Voltage on the throttle control input on the EMS unit, corresponding to full throttle.

Min. value	1.9 V
Default value	3.75 V
Max. value	4.7 V

Alarm limit for coolant temperature

The warning lamp is lit at this temperature.

Min. value	95 °C (203 °F)
Default value	98 °C (208 °F)
Max. value	101 °C (214 °F)

Idling speed.

Setting idling speed

Min. value	600 rpm
Default value	600 rpm
Max. value	1200 rpm

Stop EMS: connected to system voltage at

Stop input on EMS unit connected to system voltage at “Run” or “Stop”.

Default value “Stop”

Control gradient

Selects the amount of droop to be used (gradient).

Min. value	10 Nm/rpm (7.38 lbf ft/rpm)
Default value	25 Nm/rpm (18.44 lbf ft/rpm)
Max. value	127 Nm/rpm (93.67 lbf ft/rpm)

Engine protection charge air temperature

Chooses whether engine protection should be activated in relation to high charge air temperature.

Alternative positions “Off” or “On”
Default value “On”

Engine protection coolant level

Chooses whether engine protection should be activated in relation to low coolant level.

Alternative positions “Off” or “On”
Default value “On”

Engine protection coolant temperature

Chooses whether engine protection should be activated in relation to high coolant temperature.

Alternative positions “Off” or “On”
Default value “On”

Engine protection oil pressure

Chooses whether engine protection should be activated in relation to low oil pressure.

Alternative positions “Off” or “On”
Default value “On”

Engine protection oil temperature

Chooses whether engine protection should be activated in relation to high oil temperature.

Alternative positions “Off” or “On”
Default value “On”

Primary control position

Selects the engine speed to be used when the no regulator controller is used.

Alternative positions	“Isochronous” or “Droop”
Default value	“Isochronous”

Pre-heating on switch-on

Parameter which selects whether automatic pre-heating should be used.

Alternative positions “Off” or “On”
Default value “Off”

Maximum engine speed

Setting of maximum engine speed

Min. value	1500 rpm
Default value	2100 rpm
Max. value	2200 rpm

⚠ **IMPORTANT! No** changes may be done to the basic setting values of the engine since this affects exhaust emissions, and thus affects certification requirements.

TWD1240VE (CIU)

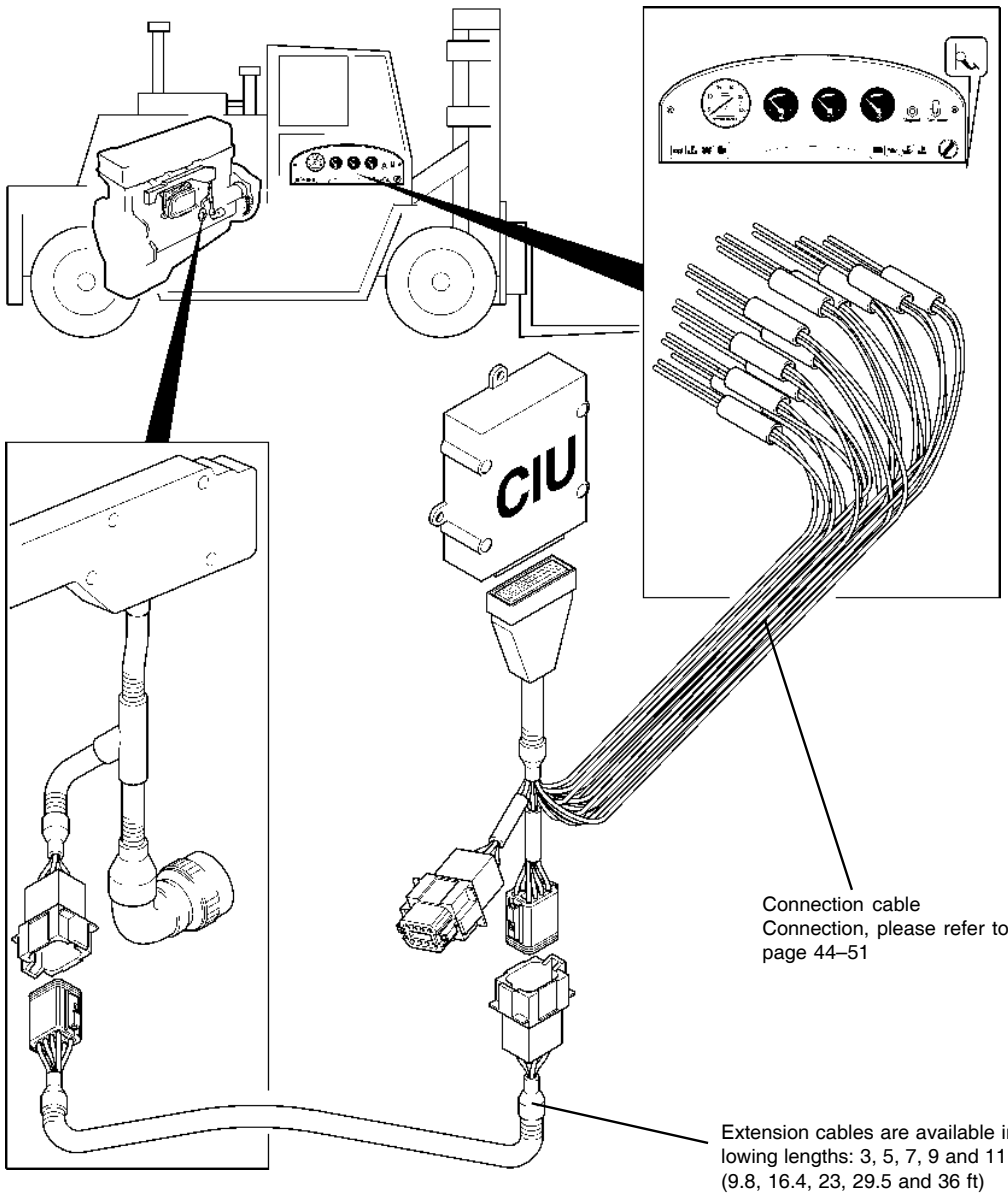

General information

The installation must be planned very thoroughly and done with the greatest care.

The connection cable between the engine and the instrument panel must be securely clamped. Remember that the connectors must also be supported so that they are not subjected to any tension.

Cables must not be run too close to hot components on the engine or close to any other source of heat. Make sure that it is protected from mechanical wear, sharp edges and water splashes. If necessary, run the cable through protective conduits.

Avoid making joints in the system as far as possible. Cables and any joints must be accessible for inspection and service

NOTE! The connectors must be installed “dry”, they must not be packed with Vaseline etc.

Connection

Engine management

(please refer to wiring diagram on page 51)

Starter switch

The starter switch is used to connect the system voltage, pre-heating function, starter function and stop function.

Position “0” = engine shut off

Position “I” = system voltage switched on

Position “II” = pre-heating on (spring biased)

Position “III” = starter motor engaged (spring biased)

Position “S” = stop function on (spring biased)

NOTE! The starting current for engine system voltage (control unit) is 10 A. Make sure that other components in the installation are dimensioned for this current density.

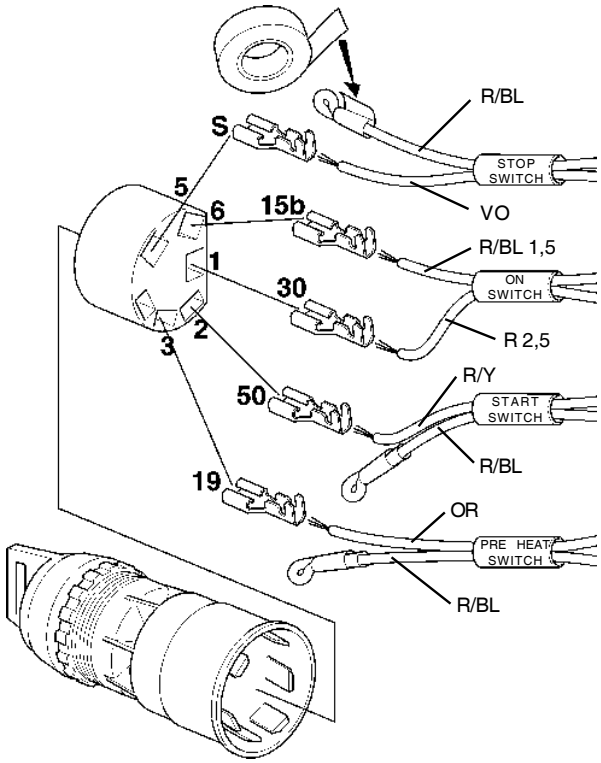

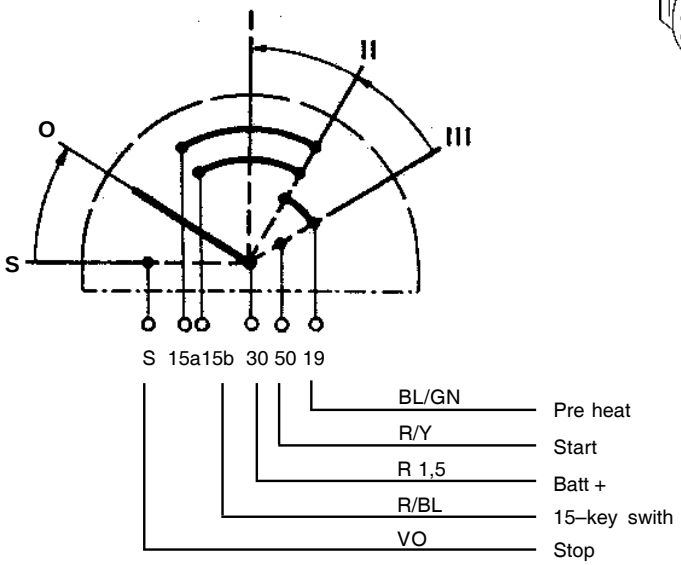

Regulator switch

Contact type, two-position

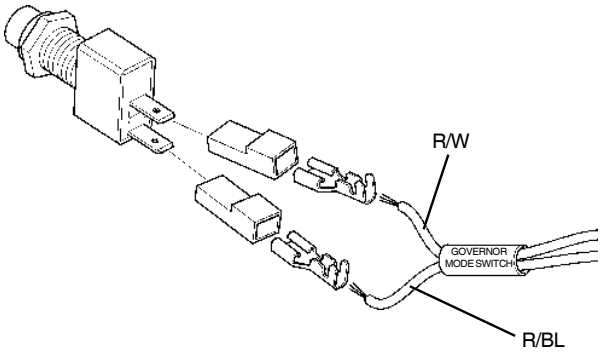

Accelerator pedal

Idling: 0.3 -1.9 V (Default value 1.17 V)

Full throttle: 1.9 -4.7 V (Default value 4.5 V)

If an accelerator pedal with different resistance and voltage values is used, the control unit must be re-calibrated with the parameter tool, please refer to “Parameter setting”.

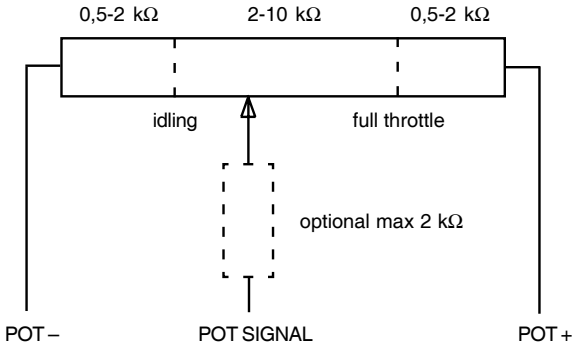

Idling switch

The accelerator has a built-in idling switch, which functions as a “Take you home device” if the potentiometer in the accelerator pedal should fail.

When the pedal is depressed, the contact is closed, and the engine speeds up in intervals to 80% of maximum speed. When the pedal is released, the contact opens and the engine falls back to idling speed.

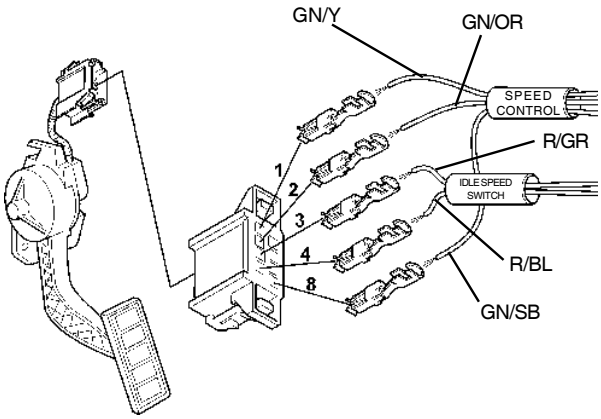

1500 / 1800 rpm switch

NOTE! This function is **not** connected on the TWD1240VE.

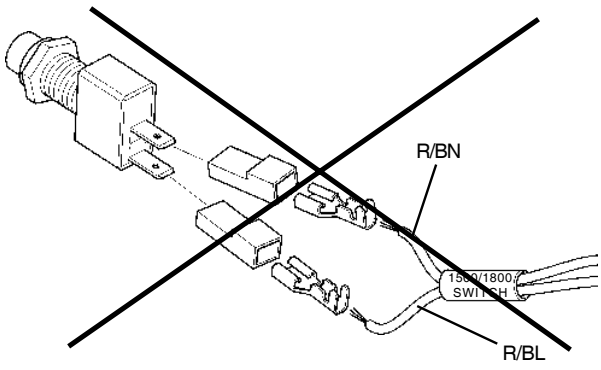

Warning and indication lamps

(please refer to wiring diagram on page 51)

Alarm, low oil pressure

Max. power 3 W
Voltage 24 V

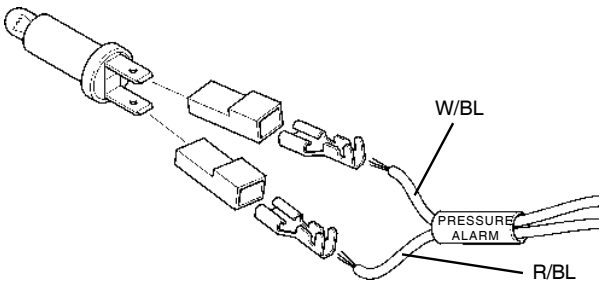

Alarm, high oil temperature

Max. power 3 W
Voltage 24 V

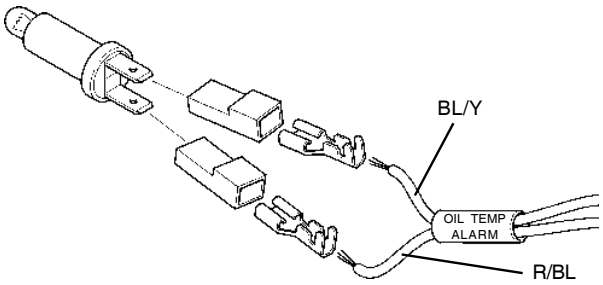

Alarm, high coolant temperature

Max. power 3 W
Voltage 24 V

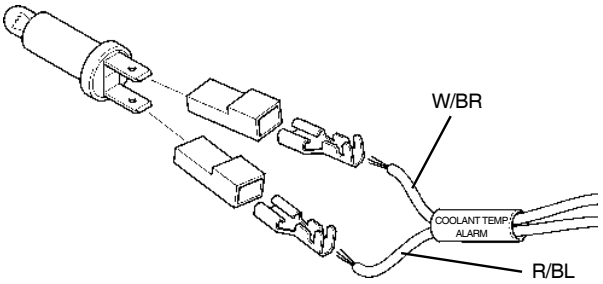

Alarm, low coolant level

Max. power 3 W
Voltage 24 V

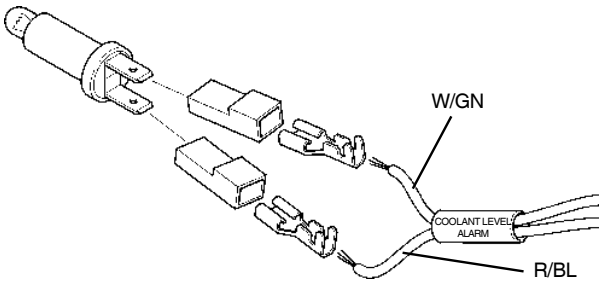

Fuel alarm

Max. power 3 W
Voltage 24 V

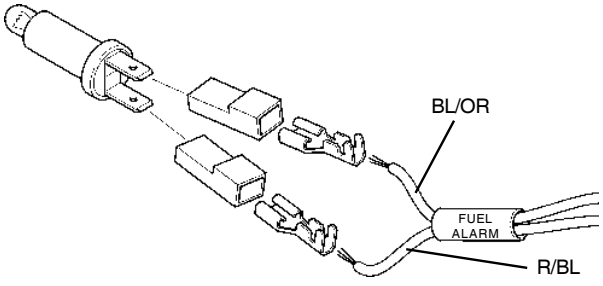

Katolight Service - Master Repair Manual - Page 2668

Charge indication

Max. power 3 W
Voltage 24 V

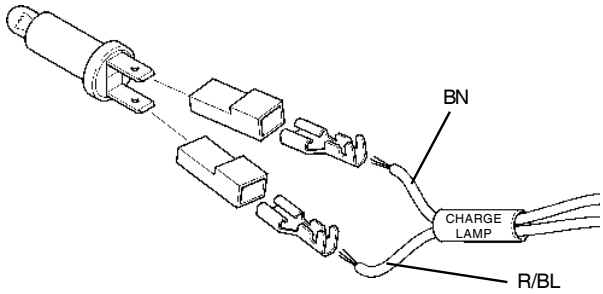

Diagnostic lamp

Max. power 3 W
Voltage 24 V

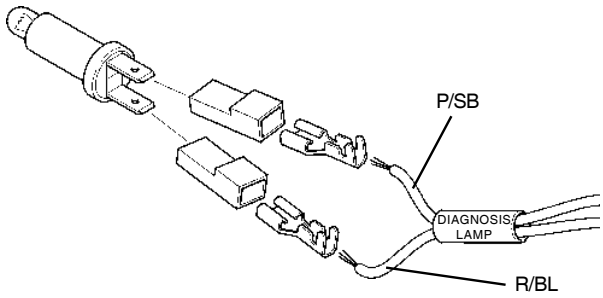

Pre-heating indication

Max. power 3 W
Voltage 24 V

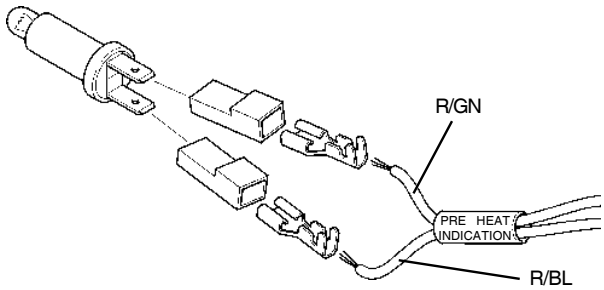

Overspeed indication

NOTE! This function is **not** connected on the TWD1240VE.

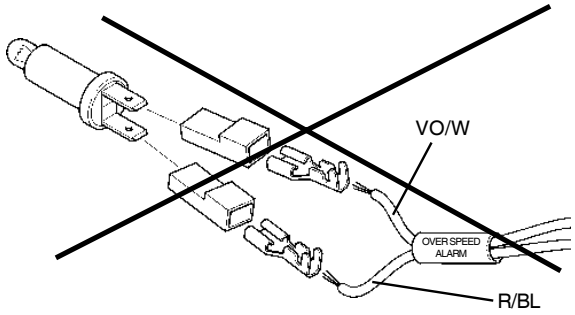

Operation indication

NOTE! This function is **not** connected on the TWD1240VE.

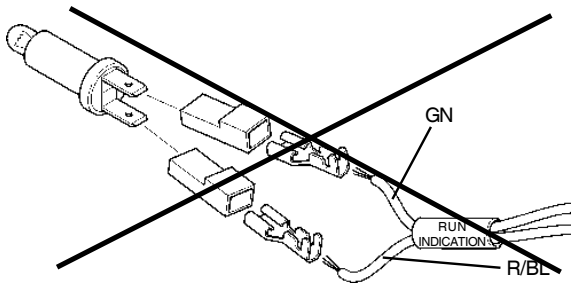

Instruments

(please refer to wiring diagram on page 51)

Tachometer

Use Volvo Penta's (VDO) universal tachometer, graduated 0–2600 rpm.

Set code 14, please refer to installation instruction 7739513-5.

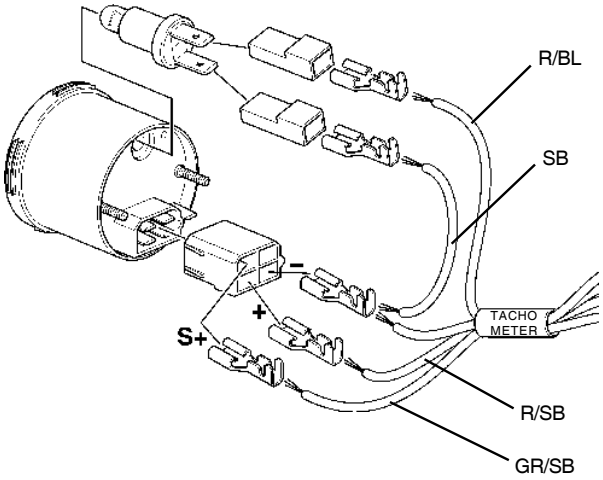

Oil pressure instrument

Use Volvo Penta's (VDO) oil pressure instrument, graduated 0-10 bar (0-145 PSI).

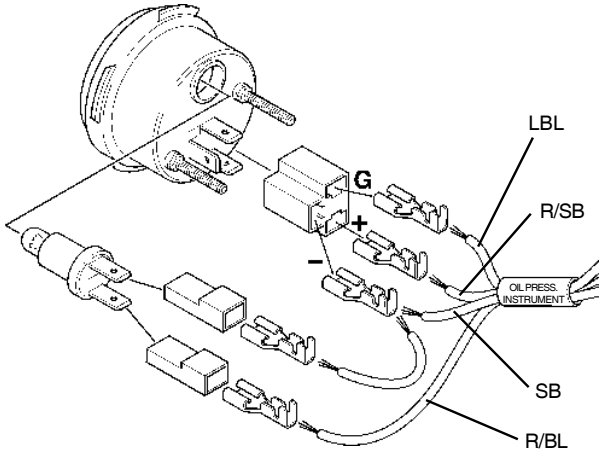

Katolight Service - Master Repair Manual - Page 2670

Oil temperature instrument

Use Volvo Penta's (VDO) oil temperature instrument, graduated 40-150 °C (140-302 °F).

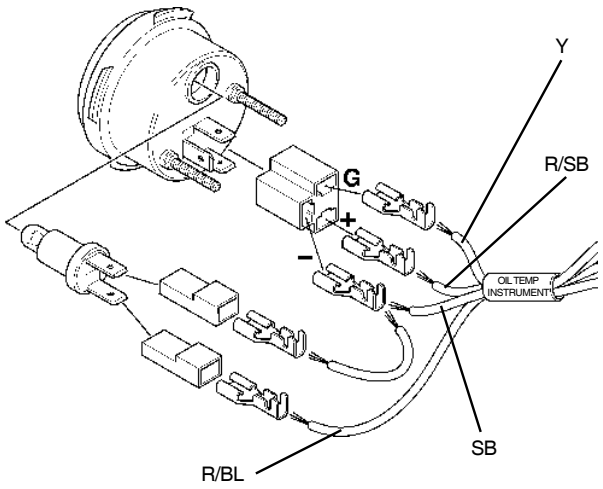

Coolant temperature instrument

Use Volvo Penta's (VDO) coolant temperature instrument, graduated 40-120°C (140-248 °F).

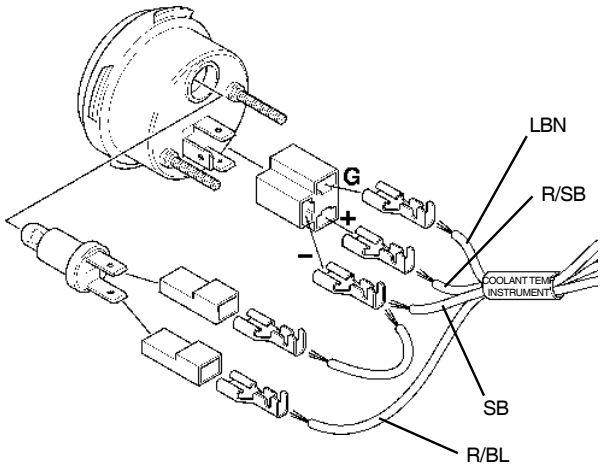

Other

(please refer to wiring diagram on page 51)

Diagnostic connector

Contact type, closing (NO), spring biased.

To read the fault codes, please refer to chapter “Fault tracing”.

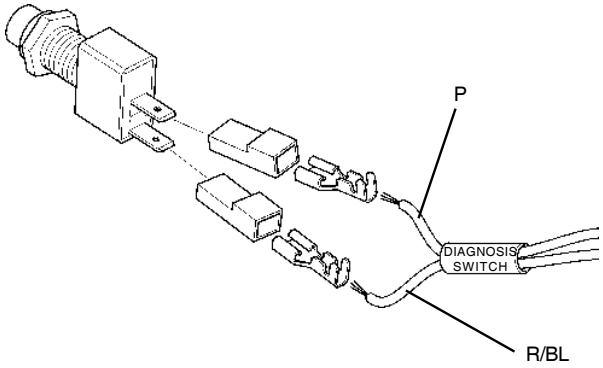

System reset

A system reset is used to delete fault codes which occurred during installation. For example, an incorrectly connected warning lamp will generate a fault code if it is removed when system voltage is switched on. This fault code is erased if a system reset is done and the lamp will be identified with its correct function.

A system reset restores, identifies and stores the current system configuration.

NOTE! Always finish off an engine installation by doing a system re-set.

Procedure

1. Press the “Diagnostic button” and keep it depressed when system voltage is switched on. Keep it depressed for 2-3 seconds after system voltage has been switched on.

   The engine is now in “system reset mode”.

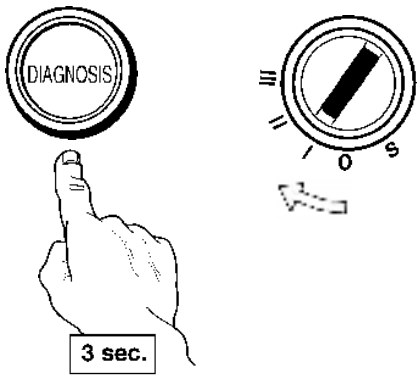

2. The system reset is completed by switching system voltage off.

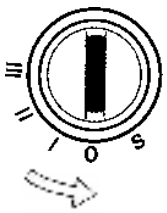

Wiring diagram

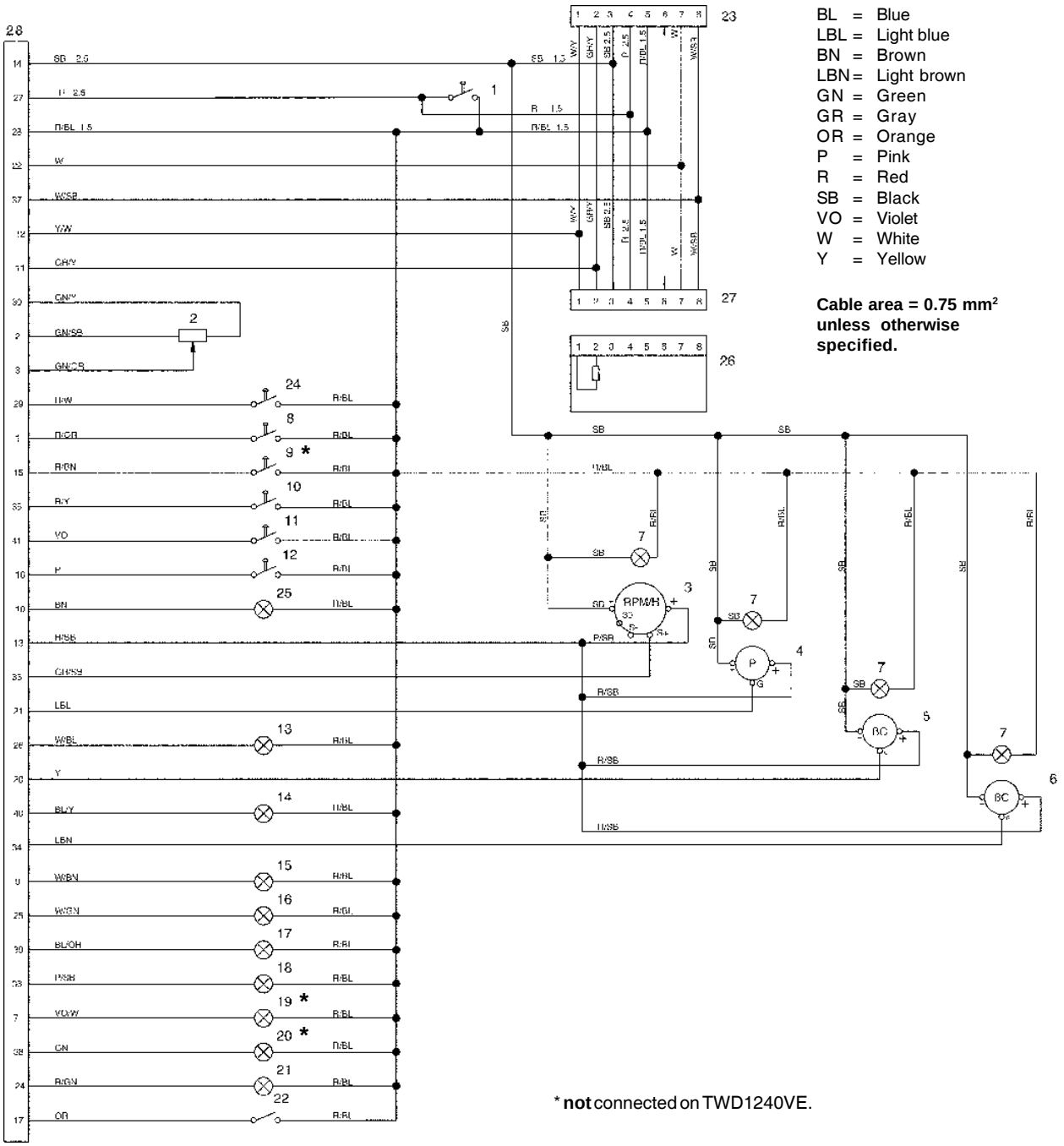

Wiring diagram, control interface unit (CIU)

1. Key switch, driving current (15+)
2. Engine speed potentiometer
3. Tachometer (code 14)
4. Oil pressure, instrument
5. Oil temperature, instrument
6. Coolant temperature, instrument
7. Instrument lighting
8. Idling contact, two-way
9. 1500/1800 contact (not connected on TWD1240VE)
10. Starter contact, spring biased
11. Stop switch, spring biased
12. Diagnostic contact, spring biased
13. Alarm, low oil pressure
14. Alarm, high oil temperature
15. Alarm, high coolant temperature
16. Alarm, low coolant level
17. Fuel alarm
18. Diagnostic lamp
19. Overspeed indication (**not** connected on TWD1240VE).
20. Operation indication (**not** connected on TWD1240VE).
21. Pre-heating indication
22. Pre-heating contact, spring biased
23. 8-pin Deutsch connector, pin
24. Regulator connector, two-position
25. Charge indication
26. Termination resistor 120 Ohm
27. 8-pin Deutsch connector, socket
28. Control Interface Unit (CIU)

Parameter setting

Connection, parameter tool

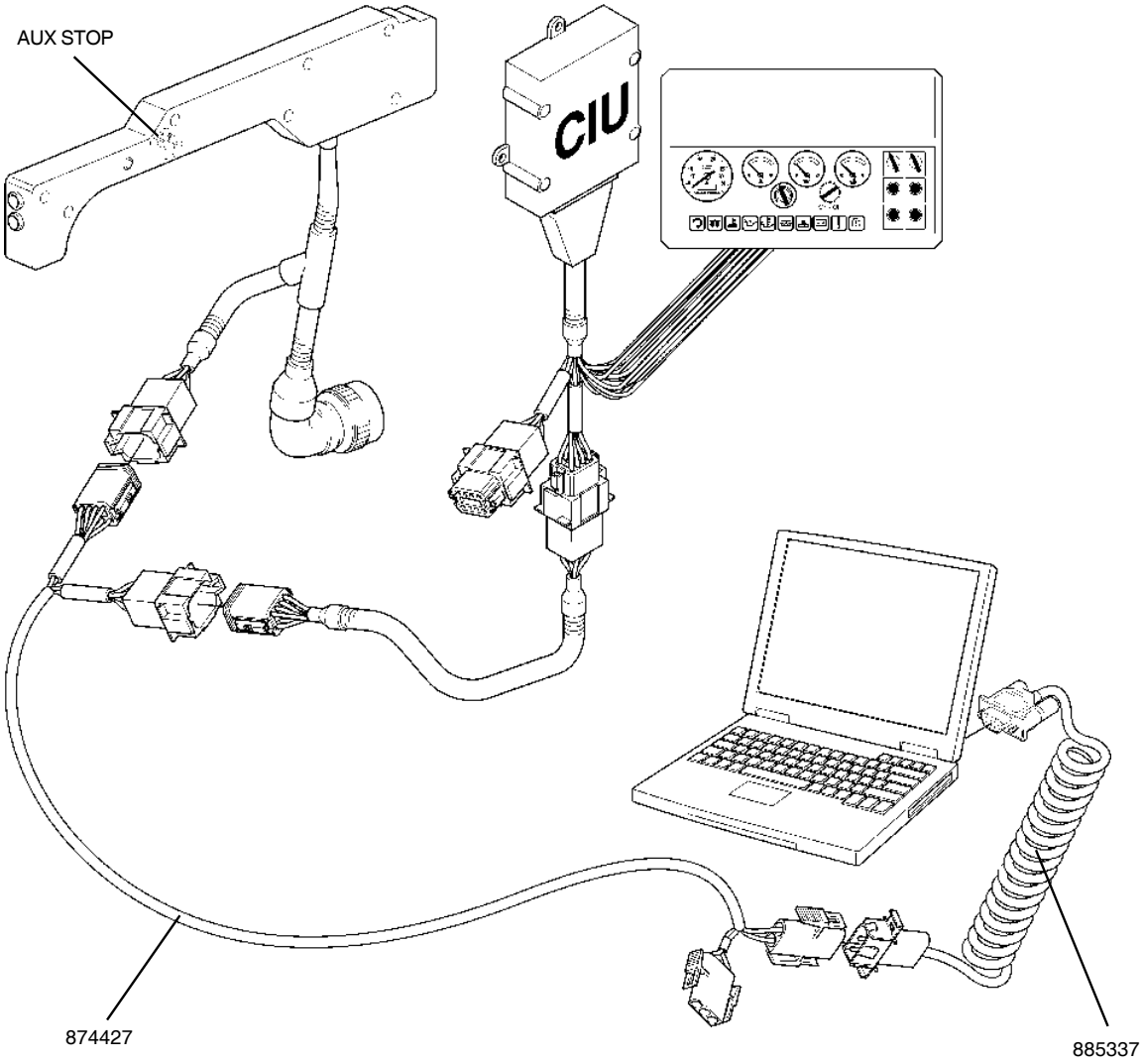

Operation

Connect your laptop as above. Use T-piece, part no. 874427 and communication cable part no. 885337.

Install the “Parameter setting tool” software.

Switch the ignition (do **not** start the engine)

Start the parameter setting tool and follow the instructions in the accompanying manual.

The tool shows the parameters which can be connected on that engine, also see the next page.

NOTE! Finish programming by switching off the ignition with the “AUX STOP” button.

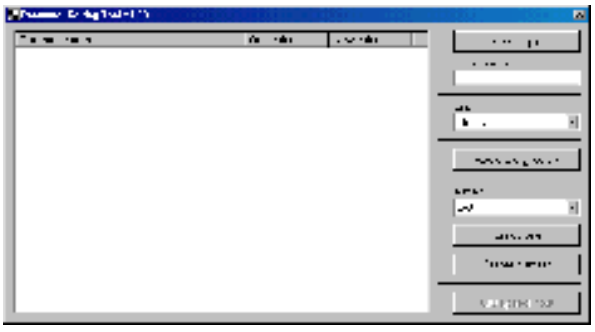

Adjustable parameters TWD1240VE (CIU)

NOTE! Some parameters require special authorization.

Stop CIU: Connected to system voltage at

Stop input on CIU unit connected to system voltage at “Run” or “Stop”.

Default value “Stop”

Idling voltage CIU

Voltage on the throttle control input on the CIU unit, corresponding to idling.

Min. value	0.3 V
Default value	1.17 V
Max. value	1.9 V

Max. speed voltage, CIU

Voltage on the throttle control input on the CIU unit, corresponding to full throttle.

Min. value	1.9 V
Default value	4.5 V
Max. value	4.7 V

Alarm limit for oil temperature

The warning lamp is lit at this temperature.

Min. value	120 °C (248 °F)
Default value	125 °C (257 °F)
Max. value	130 °C (266 °F)

Lamp test

This parameter selects whether a lamp test should be done when the system starts up.

Alternative positions “Off” or “On”
Default value “On”

Alarm limit for coolant temperature

The warning lamp is lit at this temperature.

Min. value	95 °C (203 °F)
Default value	98 °C (208 °F)
Max. value	101 °C (214 °F)

Idling speed.

Setting idling speed

Min. value	600 rpm
Default value	600 rpm
Max. value	1200 rpm

Control gradient

Selects the amount of droop to be used (gradient).

Min. value	10 Nm/rpm (7.38 lbf ft/rpm)
Default value	25 Nm/rpm (18.44 lbf ft/rpm)
Max. value	127 Nm/rpm (93.67 lbf ft/rpm)

Engine protection charge air temperature

Chooses whether engine protection should be activated in relation to high charge air temperature.

Alternative positions “Off” or “On”
Default value “On”

Engine protection coolant level

Chooses whether engine protection should be activated in relation to low coolant level.

Alternative positions “Off” or “On”
Default value “On”

Engine protection coolant temperature

Chooses whether engine protection should be activated in relation to high coolant temperature.

Alternative positions “Off” or “On”
Default value “On”

Engine protection oil pressure

Chooses whether engine protection should be activated in relation to low oil pressure.

Alternative positions “Off” or “On”
Default value “On”

Engine protection oil temperature

Chooses whether engine protection should be activated in relation to high oil temperature.

Alternative positions “Off” or “On”
Default value “On”

Primary control position

Selects the engine speed to be used when the no regulator controller is used.

Alternative positions	“Isochronous” or “Droop”
Default value	“Isochronous”

Pre-heating on switch-on

Parameter which selects whether automatic pre-heating should be used.

Alternative positions “Off” or “On”

Default value “Off”

Maximum engine speed

Setting of maximum engine speed

Min. value	1500 rpm
Default value	2100 rpm
Max. value	2200 rpm

⚠ **IMPORTANT! No** changes may be done to the basic setting values of the engine since this affects exhaust emissions, and thus affects certification requirements.

Katolight Service - Master Repair Manual - Page 2676

TWD1240VE (Power Pack)

General information

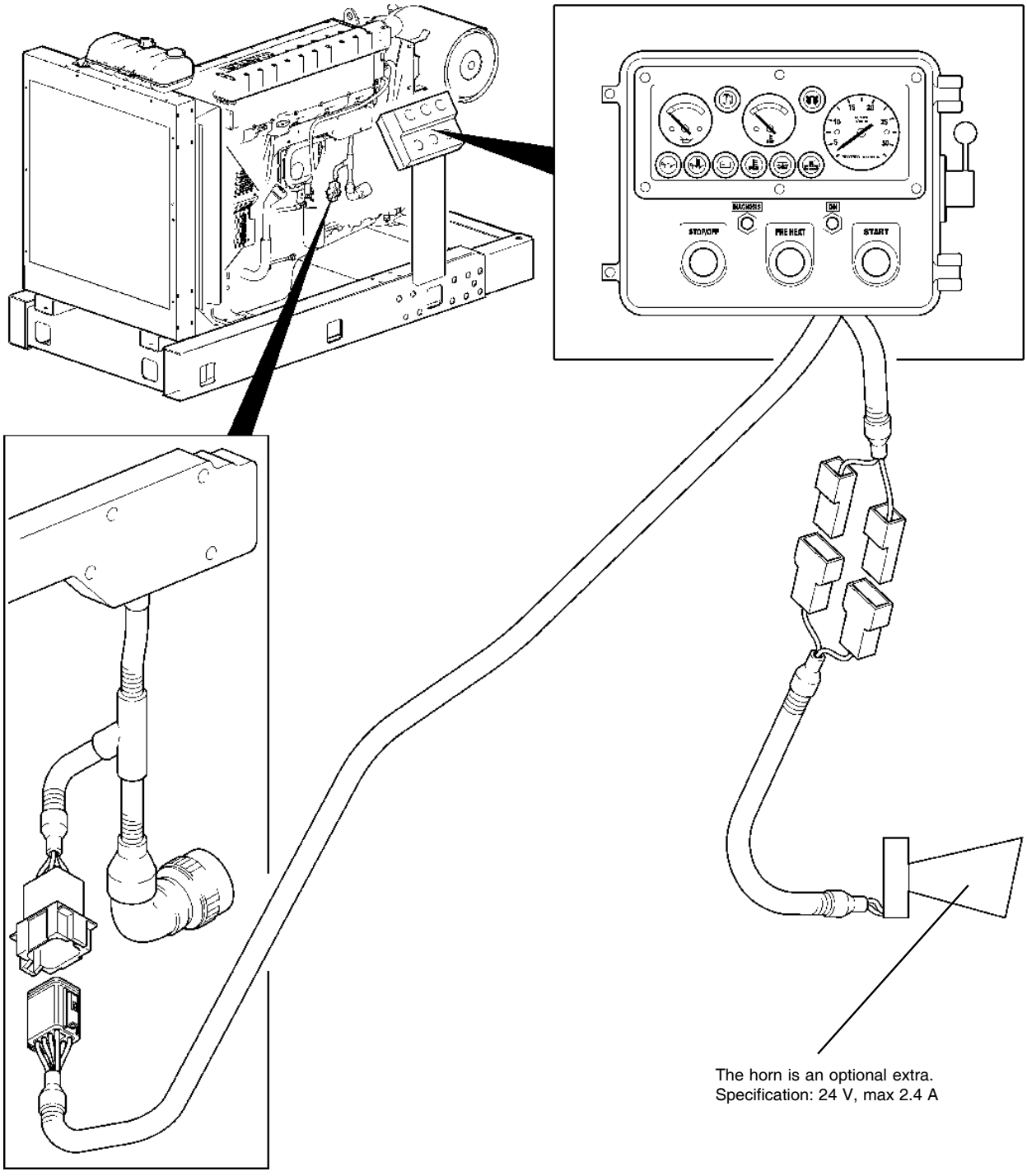

The horn is an optional extra.
Specification: 24 V, max 2.4 A

Wiring diagram

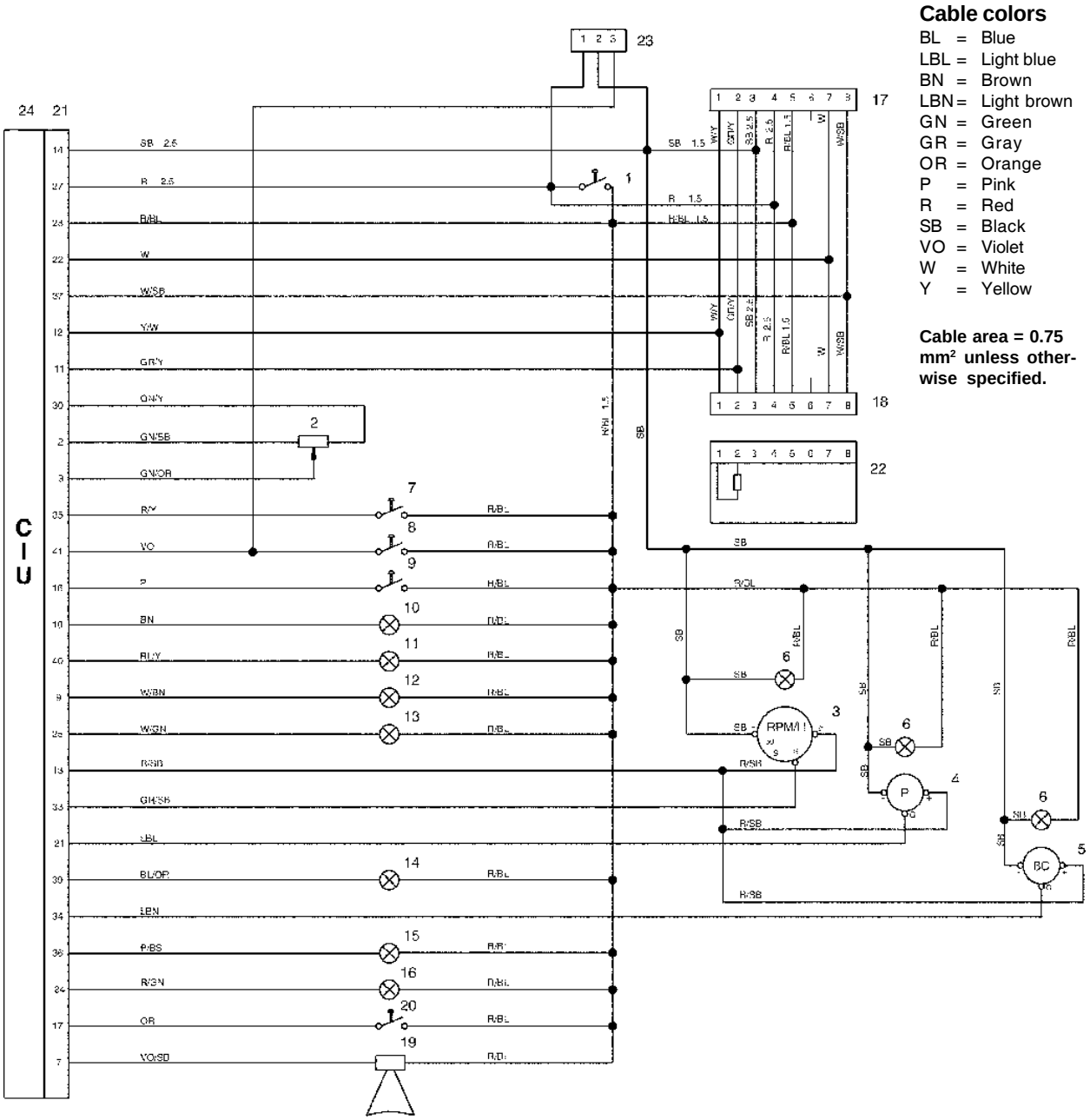

1. Activation, driving current contact (15+)
2. Engine speed potentiometer
3. Tachometer code 14
4. Oil pressure, instrument
5. Coolant temperature, instrument
6. Instrument lighting
7. Starter contact, spring biased
8. Stop switch, spring biased
9. Diagnostic contact, spring biased
10. Charge indication
11. Alarm, high oil temperature
12. Alarm, high coolant temperature
13. Alarm, low coolant level
14. Fuel alarm
15. Diagnostic lamp
16. Pre-heating indication
17. 8-pin Deutsch connector, pin
18. 8-pin Deutsch connector, pin
19. Horn, audible warning alarm
20. Pre-heating button, spring biased (optional)
21. 42-pin connector
22. Termination resistor 120 Ohm
23. Extra connector for 24 V and stop.
24. Control Interface Unit (CIU)

Parameter setting

Connection, parameter tool

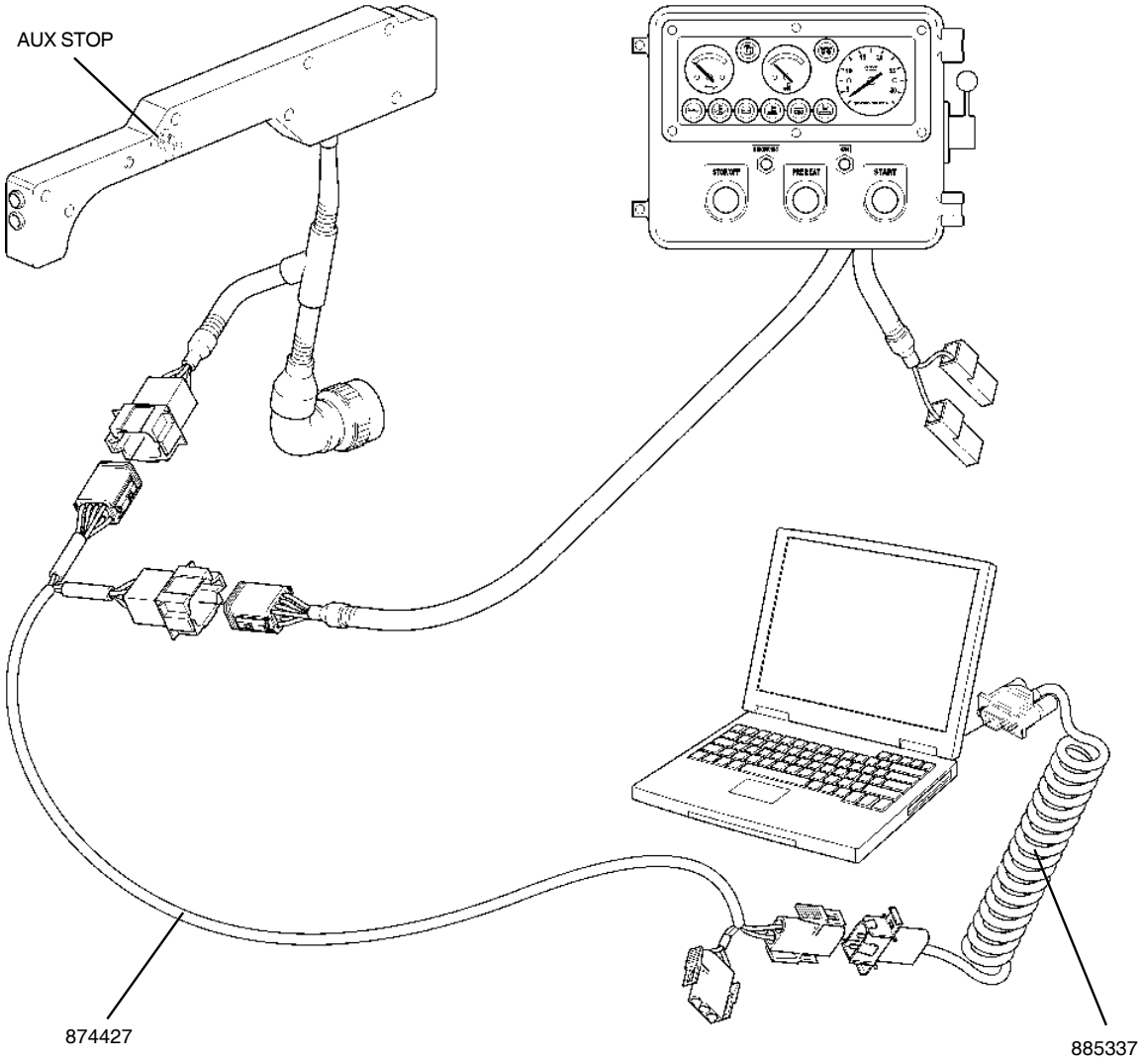

Operation

Connect your laptop as above. Use T-piece, part no. 874427 and communication cable part no. 885337.

Install the “Parameter setting tool” software.

Switch the ignition (do **not** start the engine)

Start the parameter setting tool and follow the instructions in the accompanying manual.

The tool shows the parameters which can be connected on that engine, also see the next page.

NOTE! Finish programming by switching off the ignition with the “AUX STOP” button.

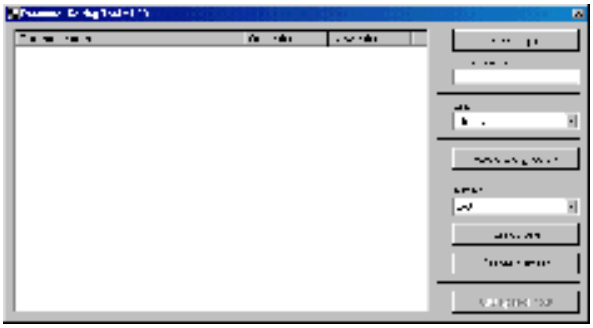

Adjustable parameters

TWD1240VE Power Pack

NOTE! Some parameters require special authorization.

Stop CIU: Connected to system voltage at

Stop input on CIU unit connected to system voltage at “Run” or “Stop”.

Default value “Stop”

Idling voltage CIU

Voltage on the throttle control input on the CIU unit, corresponding to idling.

Min. value	0.3 V
Default value	1.17 V
Max. value	1.9 V

Max. speed voltage, CIU

Voltage on the throttle control input on the CIU unit, corresponding to full throttle.

Min. value	1.9 V
Default value	4.5 V
Max. value	4.7 V

Alarm limit for oil temperature

The warning lamp is lit at this temperature.

Min. value	120 °C (248 °F)
Default value	125 °C (257 °F)
Max. value	130 °C (266 °F)

Lamp test

This parameter selects whether a lamp test should be done when the system starts up.

Alternative positions “Off” or “On”
Default value “On”

Alarm limit for coolant temperature

The warning lamp is lit at this temperature.

Min. value	95 °C (203 °F)
Default value	98 °C (208 °F)
Max. value	101 °C (214 °F)

Idling speed.

Setting idling speed

Min. value	600 rpm
Default value	600 rpm
Max. value	1200 rpm

Control gradient

Selects the amount of droop to be used (gradient).

Min. value	10 Nm/rpm (7.38 lbf ft/rpm)
Default value	25 Nm/rpm (18.44 lbf ft/rpm)
Max. value	127 Nm/rpm (93.67 lbf ft/rpm)

Engine protection charge air temperature

Chooses whether engine protection should be activated in relation to high charge air temperature.

Alternative positions “Off” or “On”
Default value “On”

Engine protection coolant level

Chooses whether engine protection should be activated in relation to low coolant level.

Alternative positions “Off” or “On”
Default value “On”

Engine protection coolant temperature

Chooses whether engine protection should be activated in relation to high coolant temperature.

Alternative positions “Off” or “On”
Default value “On”

Engine protection oil pressure

Chooses whether engine protection should be activated in relation to low oil pressure.

Alternative positions “Off” or “On”
Default value “On”

Engine protection oil temperature

Chooses whether engine protection should be activated in relation to high oil temperature.

Alternative positions “Off” or “On”
Default value “On”

Primary control position

Selects the engine speed to be used when the no regulator controller is used.

Alternative positions	“Isochronous” or “Droop”
Default value	“Isochronous”

Pre-heating on switch-on

Parameter which selects whether automatic pre-heating should be used.

Alternative positions “Off” or “On”
Default value “Off”

Maximum engine speed

Setting of maximum engine speed

Min. value	1500 rpm
Default value	1800 rpm
Max. value	2200 rpm

Fault tracing

A number of symptoms and possible causes of engine malfunctions are described in the table below. Always contact your Volvo Penta dealer if any problems occur which you can not solve by yourself.

⚠ **WARNING!** Read through the safety advice for care and maintenance work in the “Safety information” chapter before starting work.

Symptoms and possible causes

☼ The diagnosis button lamp flashes.	Please refer to the “Diagnostic information” chapter.
Engine can not be stopped	2, 5
Starter motor does not rotate	1, 2, 3, 4, 5, 6, 7, 8, 25
Starter motor rotates slowly	1, 2
Starter motor rotates normally but engine does not start	9, 10, 11, 12
Engine starts but stops again	9, 10, 11, 12, 14
Engine does not reach correct operating speed at full throttle	10, 11, 12, 13, 14, 22, 26, 27
Engine runs unevenly	11, 12
High fuel consumption	13, 14, 16, 26
Black exhaust smoke	13, 14
Blue or white exhaust smoke	15, 16, 23
Too low lubrication oil pressure	17
Too high coolant temperature	18, 19, 20, 21
Too low coolant temperature	21
No, or poor charge	2, 24

1. Flat batteries
2. Poor contact/open circuit in cables
3. Main switch turned off
4. Fuse in cable box blown
5. Faulty ignition lock
6. Faulty main relay
7. Faulty starter motor relay
8. Faulty starter motor/solenoid
9. Lack of fuel:
   - fuel taps closed
   - fuel tank empty/wrong tank connected
10. Blocked fuel filter/pre-filter (because of contamination, or paraffin fraction separation in fuel at low temperature).
11. Air in the fuel system
12. Water/contamination in fuel
13. Faulty unit injector
14. Insufficient air supply to engine:
    - blocked air filter
    - air leakage between turbocharger and engine inlet pipe.
    - fouled compressor section in turbocharger
    - faulty turbocharger
    - poor engine bay ventilation
15. Excessive coolant temperature
16. Too low coolant temperature
17. Too low oil level
18. Coolant level too low
19. Air in the coolant system
20. Faulty circulation pump
21. Defective thermostat
22. Blocked intercooler
23. Too high oil level
24. Alternator drive belt slips
25. Water entry into engine
26. High back pressure in exhaust system
27. Break in “Pot+” cable to pedal

Katolight Service - Master Repair Manual - Page 2682

Diagnostic function

Diagnostic function

The diagnostic function monitors and checks that the EDC III system functions normally.

The diagnostic function has the following tasks:

- Discover and localize malfunctions
- Notify that malfunctions have been discovered
- Give advice in fault finding
- Protect the engine and ensure continued operation when serious malfunctions are discovered.

Malfunction message

The indicator for the diagnostic button (**1**) starts to flash to notify the operator if the diagnostic function discovers a malfunction in the EDC III system.

Fault tracing guide

If the diagnostic button (**2**) is depressed and then released, a fault code is flashed out from the diagnosis lamp (**1**). This is found in the fault code list, with information about the reason, reaction and measures to be taken.

The diagnostic function affects the engine in the following ways when:

1. The diagnostic function has discovered a minor malfunction which does not damage the engine.

   Reaction: The engine is not affected.

2. The diagnostic function has discovered a serious malfunction which will not immediately damage the engine.

   Reaction: TAD1240–42GE: Engine is shut off. TWD1240VE: The engine is shut off or engine torque is lowered until the relevant value is normalized.

3. The diagnostic function has discovered a serious malfunction which makes it impossible to control the engine.

   Reaction: TAD1240–42GE: Engine speed is retained. TWD1240VE: Engine goes to idle.

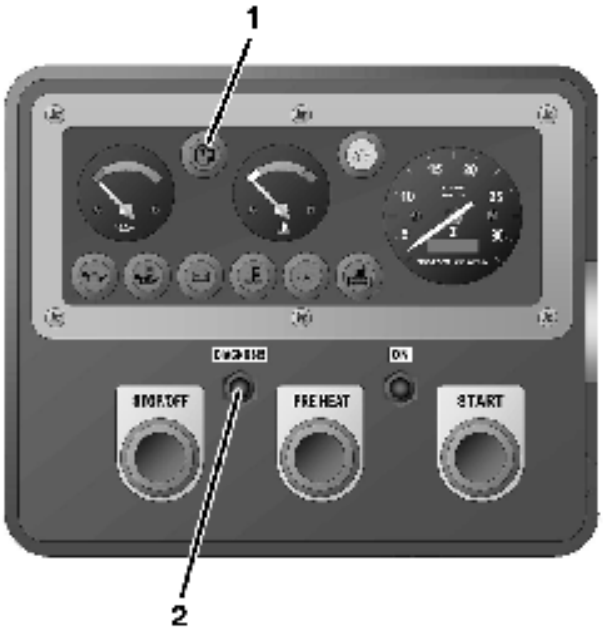

If the diagnosis button lamp flashes.

1. Reduce engine speed to idling.
2. The message is acknowledged by pressing the button **(2)**.
3. Release the diagnostic button and make a note of the diagnostic trouble code (DTC) that is flashed out. **(1)** Please refer to “Reading fault codes”
4. Look up the fault code in the fault code list and take the necessary measures.

NOTE! If the warning lamps and other instrumentation show normal function, at the same time as the controls function normally, the operator can choose to continue operation and remedy the malfunction at a later time. If the engine is shut off, some fault codes may disappear

Reading fault codes

If the diagnostic button **(2)** is depressed and then released, a fault code is flashed out **(1)**.

The fault code consists of two groups of flashes, separated by a pause of two seconds. A fault code is obtained by counting the number of flashes in each group.

Example: ☼☼ paus ☼☼☼☼ = Fault code 2.4

The fault code is stored and can be read as long as the malfunction remains. You can find information about Cause, Reaction and Actions in the fault code list.

Read as follows:

1. Press the diagnostic button **(2)**.
2. Release the diagnostic button and make a note of the fault code that is flashed out **(1)**.
3. Repeat items 1-2. A new fault code is flashed out if more are stored. Repeat until the first fault code is repeated.

NOTE! When the first fault code is repeated, all fault codes have been read out.

Erasing fault codes

The fault code memory in the diagnostic function is re-set when system voltage to the engine is shut off.

NOTE! The system voltage must be completely cut off.

When system voltage is switched on again, the diagnostic function checks to see whether there are any faults in the EDC III system. If this is the case, new fault codes are set.

This means that:

1. Fault codes for malfunctions which have been attended to or have disappeared are automatically erased.
2. Fault codes for malfunctions which have not been attended to must be acknowledged every time the system voltage is switched on.

If the diagnostic button is pressed after all faults have been attended to and stored fault codes have been erased, code 1.1 (“No fault”) will be flashed out.

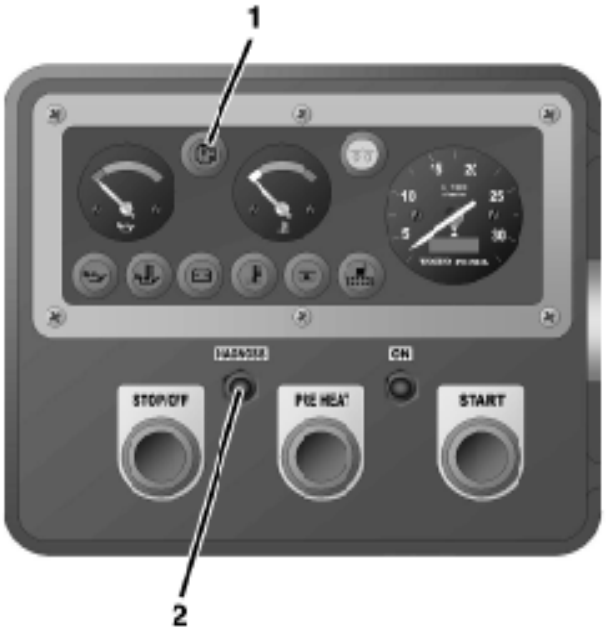

EDC III fault codes

⚠ **WARNING!** Read through the safety advice for care and maintenance work in the “Safety information” chapter before starting work.

175 Code 2.1

Reason: Water in fuel or too low fuel pressure.

Reaction: Alarm lamp is lit.

Action:

- Check the water trap filter (also drain the fuel tank).
- Check if it is possible to build up pressure with the hand pump.
- Check the fuel filter
- Check the fuel pre-filter

191 Code 2.2

Reason: Coolant level too low

Reaction: Engine is shut off (unless the protection has been shut off with the parameter setting tool). Alarm lamp is lit.

Action:

- Check the coolant level.
- Check coolant level monitor function.

15 Code 2.4

Reason: Speed sensor, flywheel. No signal

Reaction: Engine is very difficult to start and runs roughly when it starts.

Action:

- Check that the sensor connector is correctly installed.
- Check that the engine speed sensor cable is not damaged.
- Check that the engine speed sensor is correctly installed in the bell housing.

  Check engine speed sensor function.

18 Code 2.4

Reason: Speed sensor, flywheel Abnormal frequency.

Reaction: Engine is very difficult to start and runs roughly when it starts.

Action:

- Check that the engine speed sensor connector is correctly installed.
- Check that the engine speed sensor cable is not damaged.
- Check that the engine speed sensor is correctly installed in the bell housing.
- Check engine speed sensor function.

101 Code 2.4

Reason: Speed sensor, flywheel Intermittent signal

Reaction: Engine is very difficult to start and runs roughly when it starts.

Action:

- Check that the engine speed sensor connector is correctly installed.
- Check that the engine speed sensor cable is not damaged.
- Check that the engine speed sensor is correctly installed in the bell housing.
- Check engine speed sensor function.

102 Code 2.5

Reason: Speed sensor, cam gear No signal

Reaction: Engine takes longer to start than normal. Engine runs normally when is running.

Action:

- Check that the engine speed sensor connector is correctly installed.
- Check that the engine speed sensor cable is not damaged.
- Check that the engine speed sensor is correctly installed in the upper timing gear cover.
- Check engine speed sensor function.

103 Code 2.5

Reason: Speed sensor, cam gear Abnormal frequency.

Reaction: Engine takes longer to start than normal. Engine runs normally when is running.

Action:

- Check that the engine speed sensor connector is correctly installed.
- Check that the engine speed sensor cable is not damaged.
- Check that the engine speed sensor is correctly installed in the upper timing gear cover.
- Check engine speed sensor function.

23 Code 2.7

Reason: Engine speed potentiometer connected to engine management system (EMS).

Open circuit or short circuit to positive (+).

Reaction: Engine goes to idle. If the pedal is first released and then depressed, the engine can be emergency operated by means of the idling switch.

Action:

- Check that the control connector is correctly installed.
- Check that the sensor cable is not damaged.
- Check sensor function.
- Check that the 23-pin connector is correctly installed.
- Check pin C and socket C in the 23-pin connector.

24 Code 2.7

Reason: Engine speed potentiometer connected to engine management system (EMS). Short circuit to negative (-).

Reaction: Engine goes to idle. If the pedal is first released and then depressed, the engine can be emergency operated by means of the idling switch.

Action:

- Check that the potentiometer is correctly connected.
- Check that the potentiometer cable is not damaged.
- Check potentiometer function.

21 Code 2.8

Reason: Engine speed potentiometer connected to CIU. Short circuit to negative (-).

Reaction: Engine goes to idle. If the pedal is first released and then depressed, the engine can be emergency operated by means of the idling switch.

Action:

- Check that the potentiometer is correctly connected.
- Check that the potentiometer cable is not damaged.
- Check potentiometer function.

22 Code 2.8

Reason: Engine speed potentiometer connected to CIU. Short circuit to positive (+) or open circuit

Reaction: Engine goes to idle. If the pedal is first released and then depressed, the engine can be emergency operated by means of the idling switch.

Action:

- Check that the potentiometer is correctly connected.
- Check that the potentiometer cable is not damaged.
- Check potentiometer function.

181 Code 3.1

Reason 1: Oil pressure sensor. Short circuit to positive (+).

Reaction: None.

Action:

- Check that the oil pressure sensor cable is not damaged.
- Check that the oil pressure sensor is correctly connected.

182 Code 3.1

Reason: Oil pressure sensor. Open circuit or short circuit negative (-).

Reaction: None.

Action:

- Check that the oil pressure sensor cable is not damaged.
- Check that the oil pressure sensor is correctly connected.

25 Code 3.2

Reason: Charge air temperature sensor. Open circuit or short circuit to positive (+).

Reaction: None.

Action:

- Check that the charge air temperature sensor connector is correctly installed.
- Check that the charge air temperature sensor cable is not damaged.
- Check that the charge air temperature sensor is correctly installed.
- Check charge air temperature sensor function.

26 Code 3.2

Reason: Charge air temperature sensor. Short circuit to negative (-).

Reaction: None.

Action:

- Check that the charge air temperature sensor cable is not damaged.
- Check that the charge air temperature sensor is correctly installed.
- Check charge air temperature sensor function.

27 Code 3.3

Reason: Coolant temperature sensor. Open circuit or short circuit to positive (+).

Reaction: Pre-heating is also activated when the engine is hot.

Action:

- Check that the coolant temperature sensor connector is correctly installed.
- Check that the coolant temperature sensor cable is not damaged.
- Check that the coolant temperature sensor is correctly installed.
- Check coolant temperature sensor function.

28 Code 3.3

Reason 1: Coolant temperature sensor. Short circuit to negative (-).

Reaction: Pre-heating is also activated when the engine is hot.

Action:

- Check that the coolant temperature sensor cable is not damaged.
- Check that the coolant temperature sensor is correctly installed.
- Check coolant temperature sensor function.

67 Code 3.4

Reason: Charge air pressure sensor. Short circuit to positive (+).

Reaction: Engine smokes more than normally during acceleration/load increase.

Action:

- Check that the charge pressure sensor cable is not damaged.
- Check charge pressure sensor function.

68 Code 3.4

Reason 1: Charge air pressure sensor. Open circuit or short circuit negative (-).

Reaction: Engine smokes more than normally during acceleration/load increase.

Action:

- Check that the charge pressure sensor connector is correctly installed.
- Check that the charge pressure sensor cable is not damaged.
- Check that the charge pressure sensor is correctly installed.
- Check charge pressure sensor function.

184 Code 3.7

Reason: Oil temperature sensor. Open circuit or short circuit to positive (+).

Reaction: None.

Action:

- Check that the oil temperature sensor cable is not damaged.
- Check that the oil temperature sensor is correctly connected.

185 Code 3.7

Reason: Oil temperature sensor. Short circuit to negative (-).

Reaction: None.

Action:

- Check that the oil temperature sensor cable is not damaged.
- Check that the oil temperature sensor is correctly connected.

200 Code 4.1

Reason: Oil pressure alarm, open circuit

Reaction: Alarm lamp does not work. If there is an open circuit on start-up, the diagnosis is de-activated.

Action:

- Check alarm lamp.
- Check that the alarm lamp cable is not damaged.
- Check sleeve “L” in the 23-pin connector.

201 Code 4.1

Reason: Oil pressure alarm, short circuit to negative (-).

Reaction: Alarm lamp is constantly lit.

Action:

- Check that the alarm lamp cable and connector are not damaged.

202 Code 4.1

Reason: Oil pressure alarm, short circuit to positive (+).

Reaction: Alarm lamp does not work. If there is an open circuit on start-up, the diagnosis is de-activated.

Action:

- Check that the alarm lamp cable and connector are not damaged.

35 Code 4.2

Reason: Alarm for high coolant temperature. Connected to Stand-Alone interface. Short circuit to negative (-).

Reaction: Alarm lamp is constantly lit.

Action:

- Check that the alarm lamp cable is not damaged.
- Check that the alarm lamp is correctly installed.

36 Code 4.2

Reason: Alarm for high coolant temperature. Connected to Stand-Alone interface. Short circuit to positive (+).

Reaction: Alarm lamp does not work. If there is an open circuit on start-up, the diagnosis is de-activated.

Action:

- Check that the alarm lamp cable is not damaged.
- Check that the alarm lamp is correctly installed.

226 Code 4.2

Reason: Alarm for high coolant temperature. Open circuit.

Reaction: Alarm lamp does not work. If there is an open circuit on start-up, the diagnosis is de-activated.

Action:

- Check alarm lamp for high coolant temperature.
- Check that the alarm lamp cable is not damaged.
- Check sleeve “N” in the 23-pin connector.

220 Code 4.3

Reason: Lamp for operation indication. Open circuit.

Reaction: Indication lamp does not work. If there is an open circuit on start-up, the diagnosis is de-activated.

Action:

- Check alarm lamp.
- Check that the alarm lamp cable is not damaged.
- Check sleeve “N” in the 23-pin connector.

221 Code 4.3

Reason: Lamp for operation indication. Short circuit to negative (-).

Reaction: Indication lamp is constantly lit.

Action:

- Check that the alarm lamp cable and connector are not damaged.

222 Code 4.3

Reason: Lamp for operation indication. Short circuit to positive (+).

Reaction: Indication lamp does not work. If there is an open circuit on start-up, the diagnosis is de-activated.

Action:

- Check that the alarm lamp cable and connector are not damaged.

223 Code 4.4

Reason: Alarm for high engine speed. Open circuit.

Reaction: Alarm lamp does not work. If there is an open circuit on start-up, the diagnosis is de-activated.

Action:

- Check alarm lamp.
- Check that the alarm lamp cable is not damaged.
- Check sleeve “O” in the 23-pin connector.

224 Code 4.4

Reason: Alarm for high engine speed. Short circuit to negative (-).

Reaction: Alarm lamp is constantly lit.

Action:

- Check that the alarm lamp cable and connector are not damaged.

225 Code 4.4

Reason: Alarm for high engine speed. Short circuit to positive (+).

Reaction: Alarm lamp does not work. If there is an open circuit on start-up, the diagnosis is de-activated.

Action:

- Check that the alarm lamp cable and connector are not damaged.

203 Code 4.5

Reason: Alarm for low coolant level. Open circuit.

Reaction: Alarm lamp does not work. If there is an open circuit on start-up, the diagnosis is de-activated.

Action:

- Check alarm lamp.
- Check that the alarm lamp cable is not damaged.
- Check sleeve “N” in the 23-pin connector.

204 Code 4.5

Reason: Alarm for low coolant level. Short circuit to negative (-).

Reaction: Alarm lamp is constantly lit.

Action:

- Check that the alarm lamp cable and connector are not damaged.

205 Code 4.5

Reason: Alarm for low coolant level. Short circuit to positive (+).

Reaction: Alarm lamp does not work. If there is an open circuit on start-up, the diagnosis is de-activated.

Action:

- Check that the alarm lamp cable and connector are not damaged.

41 Code 4.6

Reason: Starter relay on starter motor. Short circuit to positive (+).

Reaction: Engine can not be started.

Action:

- Check that the relay cable is not damaged.
- Check relay function.

42 Code 4.6

Reason: Starter relay on starter motor. Short circuit to negative (-).

Reaction: Engine is to be started -> Starter motor operates although no start demand was made on switch-on. Engine is running -> Starter motor operates although no start demand was made.

Engine is being started > Starter motor does not disconnect when engine has started.

Action:

- Check that the relay cable is not damaged.
- Check relay function.

107 Code 4.6

Reason: Starter motor relay. Open circuit.

Reaction: Engine can not be started.

Action:

- Check that the cable to the starter motor (yellow/black) is correctly connected.
- Check that the cable to the starter motor (yellow/black) is not damaged.
- Check that the relay on the starter motor is undamaged.

108 Code 4.7

Reason: Starter input on engine management system (EMS). Short circuit to negative (-).

Reaction: Engine can not be started.

Action:

- Check that the starter switch/starter button cable is not damaged.
- Check contact pressure in sleeve “E” in the 23-pin connector.

109 Code 4.7

Reason: Stop on engine management system (EMS). Short circuit to negative (-).

Reaction: Engine can only be stopped with emergency stop on engine.

Action:

- Check that the starter switch/starter button cable is not damaged.
- Check contact pressure in sleeve “H” in the 23-pin connector.

43 Code 5.1

Reason: Main relay. Short circuit to positive (+).

Reaction: Instrument panel is disconnected from system voltage when starter key is turned to start position. Engine can not be started.

Action:

- Check that the relay cable is not damaged.
- Check relay function.

208 Code 5.2

Reason: Start input on CIU. Short circuit to negative (-).

Reaction: Engine can not be started.

Action:

- Check that the starter switch connections are not damaged.
- Check that the starter switch cable is not damaged.

210 Code 5.2

Reason: Start input on CIU. Short circuit to plus (+) or activated for too long.

Reaction: The engine starts as soon as the ignition is switched on.

Action:

- Check that the starter switch connections are not damaged.
- Check that the starter switch cable is not damaged.

209 Code 5.3

Reason: Stop input on CIU. Short circuit to negative (-).

Reaction: Engine can only be stopped with emergency stop on engine.

Action:

- Check that the starter switch connections are not damaged.
- Check that the starter switch cable is not damaged.

211 Code 5.3

Reason: Stop input on CIU. Short circuit to plus (+) or activated for too long.

Reaction: Engine stops. A fault code is displayed for 40 seconds and the engine can not be started during this time. When a fault code is displayed on the diagnosis lamp, the engine can be started but not stopped.

Action:

- Check that the starter switch connections are not damaged.
- Check that the starter switch cable is not damaged.

214 Code 5.3

Reason: Stop input on CIU. Open circuit or activated for too long.

Reaction: Engine stops. A fault code is displayed for 40 seconds and the engine can not be started during this time. When a fault code is displayed on the diagnosis lamp, the engine can be started but not stopped.

Action:

- Check that the starter switch connections are not damaged.
- Check that the starter switch cable is not damaged.

74 Code 5.4

Reason: Pre-heating relay. Open circuit.

Reaction: Pre-heating can not be activated.

Action:

- Check that the relay input cable is not damaged.
- Check relay function.
- Check the contact pressure in socket 36 in the red connector on the engine management system (EMS).

75 Code 5.4

Reason: Pre-heating relay. Short circuit to negative (-).

Reaction: Pre-heating is constantly connected.

Action:

- Check that the relay input cable is not damaged.
- Check relay function.

76 Code 5.4

Reason: Pre-heating relay. Short circuit to positive (+).

Reaction: Pre-heating can not be connected.

Action:

- Check that the relay input cable is not damaged.
- Check relay function.

183 Code 5.8

Reason: Oil temperature is too high.

Reaction: Limited engine power (unless the protection has been shut off with the parameter setting tool). Alarm lamp is lit.

Action:

- Check oil level.
- Check oil temperature.
- Check oil system thermostat.
- Check oil temperature sensor function.

31 Code 6.1

Reason: Coolant temperature is too high.

Reaction: Engine is shut off (unless the protection has been shut off with the parameter setting tool). Alarm indication is lit.

Action:

- Check the coolant level.
- Check the intercooler (cleanliness).
- Check if there is air in the cooling system.
- Check the pressure cap on the expansion tank.
- Check coolant temperature sensor function.
- Check thermostat function.

60 Code 6.2

Reason: Charge air temperature is too high.

Reaction: Engine power limited to 50% (unless the protection has been shut off with the parameter setting tool).

Action:

- Check the coolant level.
- Check the intercooler (cleanliness).
- Check charge air temperature sensor function.
- Check thermostat function.

213 Code 6.4

Reason: Faulty data link (CAN), CIU.

Reaction: Instruments and alarm lamps stop working.

Action:

- Check that the 8-pin connector is not damaged.
- Check that the cables between the CIU and the engine management unit (EMS) are not damaged.
- Check that sleeves 11 and 12 in the connector on the CIU are not damaged.
- Check the contact pressure in sockets 1 and 2 in the red connector on the engine management system (EMS).

38 Code 6.5

Reason: Faulty data link (CAN), engine management system (EMS).

Reaction: Engine not operating: engine can not be started. Engine operating: engine idles and can only be stopped with the emergency stop.

Action:

- Check that the 8-pin connector is not damaged.
- Check that the cables between the CIU and the engine management unit (EMS) are not damaged.
- Check that sleeves 11 and 12 in the connector on the CIU are not damaged.
- Check the contact pressure in sockets 1 and 2 in the red connector on the engine management system (EMS).

105 Code 6.5

Reason: Faulty data link (CAN).

Reaction: Engine not running -> Engine can not be started. Engine running -> Engine idles and can only be stopped with the emergency stop.

Action:

- Check that the 8-pin connector is not damaged.
- Check that the cables between the CIU and the engine management unit (EMS) are not damaged.
- Check that sleeves 11 and 12 in the connector on the CIU are not damaged.
- Check the contact pressure in sockets 1 and 2 in the red connector on the engine management system (EMS).

106 Code 6.5

Reason: Faulty data link (CAN).

Reaction: Engine not running -> Engine can not be started. Engine running -> Engine idles and can only be stopped with the emergency stop.

Action:

- Check that the 8-pin connector is not damaged.
- Check that the 8-connector cable between the CIU and the engine management unit (EMS) is not damaged.
- Check that sleeves 11 and 12 in the connector on the CIU are not damaged.
- Check the contact pressure in sockets 1 and 2 in the red connector on the engine management system (EMS).

180 Code 6.6

Reason: Oil pressure is too low.

Reaction: Engine is shut off (unless the protection has been shut off with the parameter setting tool).

Alarm lamp is lit.

Action:

- Check oil level.
- Check that the air filters are not blocked.
- Check system pressure valves and safety valves in the oil system.
- Check oil pressure sensor function.

110 Code 7.1

Reason: Unit injector cylinder #1. Electrical fault.

Reaction: Engine does not run on all cylinders, unpleasant noise and reduced performance.

Action:

- Check that the unit injector cables are not damaged.
- Check that the unit injector connections are not damaged.

111 Code 7.1

Reason: Unit injector cylinder #1. Electrical fault.

Reaction: Engine does not run on all cylinders, unpleasant noise and reduced performance.

Action:

- Check that the unit injector cables are not damaged.
- Check that the unit injector connections are not damaged.

112 Code 7.1

Reason: Unit injector cylinder #1. Electrical fault.

Reaction: Engine does not run on all cylinders, unpleasant noise and reduced performance.

Action:

- Check that the unit injector cables are not damaged.
- Check that the unit injector connections are not damaged.

113 Code 7.1

Reason: Unit injector cylinder #1. Electrical fault.

Reaction: Engine does not run on all cylinders, unpleasant noise and reduced performance.

Action:

- Check that the unit injector cables are not damaged.
- Check that the unit injector connections are not damaged.

114 Code 7.1

Reason: Fault in compression or unit injector, cylinder # 1.

Reaction: Cylinder balancing is stopped -> Less even running at lower speeds and low loading.

Action:

- Check fuel supply pressure.
- Check the valve clearance.
- Check that the unit injector and connection cables are not damaged.
- Do a compression test and check cylinder # 1.

115 Code 7.1

Reason: Unit injector cylinder #1. Electrical fault.

Reaction: Engine does not run on all cylinders, unpleasant noise and reduced performance.

Action:

- Check the contact pressure in socket 11 in the black connector on the engine management system (EMS).
- Check that the unit injector cables are not damaged.
- Check that the unit injector connections are not damaged.

120 Code 7.2

Reason: Unit injector cylinder #2. Electrical fault.

Reaction: Engine does not run on all cylinders, unpleasant noise and reduced performance.

Action:

- Check that the unit injector cables are not damaged.
- Check that the unit injector connections are not damaged.

121 Code 7.2

Reason: Unit injector cylinder #2. Electrical fault.

Reaction: Engine does not run on all cylinders, unpleasant noise and reduced performance.

Action:

- Check that the unit injector cables are not damaged.
- Check that the unit injector connections are not damaged.

122 Code 7.2

Reason: Unit injector cylinder #2. Electrical fault.

Reaction: Engine does not run on all cylinders, unpleasant noise and reduced performance.

Action:

- Check that the unit injector cables are not damaged.
- Check that the unit injector connections are not damaged.

123 Code 7.2

Reason: Unit injector cylinder #2. Electrical fault.

Reaction: Engine does not run on all cylinders, unpleasant noise and reduced performance.

Action:

- Check that the unit injector cables are not damaged.
- Check that the unit injector connections are not damaged.

124 Code 7.2

Reason: Fault in compression or unit injector, cylinder # 2.

Reaction: Cylinder balancing is stopped -> Less even running at lower speeds and low loading.

Action:

- Check fuel supply pressure.
- Check the valve clearance.
- Check that the unit injector and connection cables are not damaged.
- Do a compression test and check cylinder # 2.
- Check fuel supply pressure.

125 Code 7.2

Reason: Unit injector cylinder #2. Electrical fault.

Reaction: Engine does not run on all cylinders, unpleasant noise and reduced performance.

Action:

- Check the contact pressure in socket 22 in the black connector on the engine management system (EMS).
- Check that the unit injector cables are not damaged.
- Check that the unit injector connections are not damaged.

130 Code 7.3

Reason: Unit injector cylinder #3. Electrical fault.

Reaction: Engine does not run on all cylinders, unpleasant noise and reduced performance.

Action:

- Check that the unit injector cables are not damaged.
- Check that the unit injector connections are not damaged.

131 Code 7.3

Reason: Unit injector cylinder #3. Electrical fault.

Reaction: Engine does not run on all cylinders, unpleasant noise and reduced performance.

Action:

- Check that the unit injector cables are not damaged.
- Check that the unit injector connections are not damaged.

132 Code 7.3

Reason: Unit injector cylinder #3. Electrical fault.

Reaction: Engine does not run on all cylinders, unpleasant noise and reduced performance.

Action:

- Check that the unit injector cables are not damaged.
- Check that the unit injector connections are not damaged.

133 Code 7.3

Reason: Unit injector cylinder #3. Electrical fault.

Reaction: Engine does not run on all cylinders, unpleasant noise and reduced performance.

Action:

- Check that the unit injector cables are not damaged.
- Check that the unit injector connections are not damaged.

134 Code 7.3

Reason: Fault in compression or unit injector, cylinder # 3.

Reaction: Cylinder balancing is stopped -> Less even running at lower speeds and low loading.

Action:

- Check fuel supply pressure.
- Check the valve clearance.
- Check that the unit injector and connection cables are not damaged.
- Do a compression test and check cylinder # 3.

135 Code 7.3

Reason: Unit injector cylinder #3. Electrical fault.

Reaction: Engine does not run on all cylinders, unpleasant noise and reduced performance.

Action:

- Check the contact pressure in socket 23 in the black connector on the engine management system (EMS).
- Check that the unit injector cables are not damaged.
- Check that the unit injector connections are not damaged.

140 Code 7.4

Reason: Unit injector cylinder #4. Electrical fault.

Reaction: Engine does not run on all cylinders, unpleasant noise and reduced performance.

Action:

- Check that the unit injector cables are not damaged.
- Check that the unit injector connections are not damaged.

141 Code 7.4

Reason: Unit injector cylinder #4. Electrical fault.

Reaction: Engine does not run on all cylinders, unpleasant noise and reduced performance.

Action:

- Check that the unit injector cables are not damaged.
- Check that the unit injector connections are not damaged.

142 Code 7.4

Reason: Unit injector cylinder #4. Electrical fault.

Reaction: Engine does not run on all cylinders, unpleasant noise and reduced performance.

Action:

- Check that the unit injector cables are not damaged.
- Check that the unit injector connections are not damaged.

143 Code 7.4

Reason: Unit injector cylinder #4. Electrical fault.

Reaction: Engine does not run on all cylinders, unpleasant noise and reduced performance.

Action:

- Check that the unit injector cables are not damaged.
- Check that the unit injector connections are not damaged.

144 Code 7.4

Reason: Fault in compression or unit injector, cylinder # 4.

Reaction: Cylinder balancing is stopped -> less even running at lower speeds and low loading.

Action:

- Check fuel supply pressure.
- Check the valve clearance.
- Check that the unit injector and connection cables are not damaged.
- Do a compression test and check cylinder # 4.

145 Code 7.4

Reason: Unit injector cylinder #4. Electrical fault.

Reaction: Engine does not run on all cylinders, unpleasant noise and reduced performance.

Action:

- Check the contact pressure in socket 34 in the black connector on the engine management system (EMS).
- Check that the unit injector cables are not damaged.
- Check that the unit injector connections are not damaged.

150 Code 7.5

Reason: Unit injector cylinder #5. Electrical fault.

Reaction: Engine does not run on all cylinders, unpleasant noise and reduced performance.

Action:

- Check that the unit injector cables are not damaged.
- Check that the unit injector connections are not damaged.

151 Code 7.5

Reason: Unit injector cylinder #5. Electrical fault.

Reaction: Engine does not run on all cylinders, unpleasant noise and reduced performance.

Action:

- Check that the unit injector cables are not damaged.
- Check that the unit injector connections are not damaged.

152 Code 7.5

Reason: Unit injector cylinder #5. Electrical fault.

Reaction: Engine does not run on all cylinders, unpleasant noise and reduced performance.

Action:

- Check that the unit injector cables are not damaged.
- Check that the unit injector connections are not damaged.

153 Code 7.5

Reason: Unit injector cylinder #5. Electrical fault.

Reaction: Engine does not run on all cylinders, unpleasant noise and reduced performance.

Action:

- Check that the unit injector cables are not damaged.
- Check that the unit injector connections are not damaged.

154 Code 7.5

Reason: Fault in compression or unit injector, cylinder # 5.

Reaction: Engine does not run on all cylinders, unpleasant noise and reduced performance.

Action:

- Check that the unit injector cables are not damaged.
- Check that the unit injector connections are not damaged.
- Do a compression test and check cylinder # 5.

155 Code 7.5

Reason: Unit injector cylinder #5. Electrical fault.

Reaction: Engine does not run on all cylinders, unpleasant noise and reduced performance.

Action:

- Check the contact pressure in socket 35 in the black connector on the engine management system (EMS).
- Check that the unit injector cables are not damaged.
- Check that the unit injector connections are not damaged.

160 Code 7.6

Reason: Unit injector cylinder #6. Electrical fault.

Reaction: Engine does not run on all cylinders, unpleasant noise and reduced performance.

Action:

- Check that the unit injector cables are not damaged.
- Check that the unit injector connections are not damaged.

161 Code 7.6

Reason: Unit injector cylinder #6. Electrical fault.

Reaction: Engine does not run on all cylinders, unpleasant noise and reduced performance.

Action:

- Check that the unit injector cables are not damaged.
- Check that the unit injector connections are not damaged.

162 Code 7.6

Reason: Unit injector cylinder #6. Electrical fault.

Reaction: Engine does not run on all cylinders, unpleasant noise and reduced performance.

Action:

- Check that the unit injector cables are not damaged.
- Check that the unit injector connections are not damaged.

163 Code 7.6

Reason: Unit injector cylinder #6. Electrical fault.

Reaction: Engine does not run on all cylinders, unpleasant noise and reduced performance.

Action:

- Check that the unit injector cables are not damaged.
- Check that the unit injector connections are not damaged.

164 Code 7.6

Reason: Fault in compression or unit injector, cylinder # 6.

Reaction: Cylinder balancing is stopped -> Less even running at lower speeds and low loading.

Action:

- Check fuel supply pressure.
- Check the valve clearance.
- Check unit injector and connection cables.
- Do a compression test and check cylinder # 6.

165 Code 7.6

Reason: Unit injector cylinder #6. Electrical fault.

Reaction: Engine does not run on all cylinders, unpleasant noise and reduced performance.

Action:

- Check the contact pressure in socket 35 in the black connector on the engine management system (EMS).
- Check that the unit injector cables are not damaged.
- Check that the unit injector connections are not damaged.

82 Code 9.8

Reason: Faulty EEPROM, CIU.

Reaction: CIU returns to factory setting.

Action:

- Change CIU unit.

212 Code 9.8

Reason: Faulty flash memory, CIU.

Reaction: Engine goes to idle.

Action:

- Change CIU unit.

254 Code 9.8

Reason: Controller failure, CIU

Reaction: Engine can not be started, if engine is running -> Idling.

Action:

- Change CIU unit.

255 Code 9.9

Reason: Memory fault in engine management system (EMS).

Reaction: Engine can not be started (varies).

Action:

- Change engine management system (EMS).

32 Code -

Reason: Diagnostic lamp (connected to Stand-Alone interface). Open circuit.

Reaction: Diagnostic lamp does not light up on lamp test, no fault codes can be read out.

Action:

- Check that lamp is not damaged.
- Check that lamp cables are not damaged.
- Check contact pressure in sleeve “J” in the 23-pin connector.

33 Code -

Reason: Diagnostic lamp (connected to Stand-Alone interface). Short circuit to negative (-).

Reaction: Diagnostic lamp is constantly lit.

Action:

- Check that lamp cables are not damaged.
- Check that lamp is correctly installed.

34 Code -

Reason: Diagnostic lamp (connected to Stand-Alone interface). Short circuit to positive (+).

Reaction: Diagnostic lamp does not light up on lamp test, no fault codes can be read out.

Action:

- Check that lamp cables are not damaged.
- Check that lamp is correctly installed.

57 Code -

Reason: Charge pressure is too high.

Reaction: None.

Action:

- Check turbocharger compressor function.
- Check charge pressure sensor function.
- Check fuel volume/unit injector.

58 Code -

Reason: Charge pressure is too low.

Reaction: Engine has lower performance than normal.

Action:

- Check air filter function.
- Check turbocharger compressor function.
- Check charge pressure sensor function.
- Check fuel supply pressure.

63 Code -

Reason: Power supply to sensor. Short circuit to positive (+).

Reaction: Several fault codes for sensor faults.

Action:

- Check cables.

64 Code -

Reason: Power supply to sensor. Short circuit to negative (-).

Reaction: Several fault codes for sensor faults.

Action:

- Check cables.

173 Code -

Reason: Faulty data link (J1708), engine management system (EMS).

Reaction: Diagnostic lamp only shows internal CIU faults.

Action:

- Check that the 8-pin connector is not damaged.
- Check that the 8-connector cable between the CIU and the engine management unit (EMS) is not damaged.
- Check that pin/sleeves 22 and 37 in the connector on the CIU are not damaged.

176 Code -

Reason: Monitor for water in fuel or too low fuel pressure. Short circuit to positive (+).

Reaction: None.

Action:

- Check that the cables are not damaged.

186 Code -

Reason: Memory fault in engine management system (EMS).

Reaction: Engine can not be started.

Action:

- Change engine management system (EMS).

187 Code -

Reason: Memory fault in engine management system (EMS).

Reaction: Engine can not be started.

Action:

- Change engine management system (EMS).

188 Code -

Reason: Programming plug (EOL). Short circuit to positive (+).

Reaction: Engine does not start, engine management unit (EMS) is in programming mode.

Action:

- Check that EOL connector is not jumpered.
- Check that the EOL connector cable is not damaged.

189 Code -

Reason: Programming plug (EOL). Short circuit to negative (-).

Reaction: None.

Action:

- Check that the EOL connector cable is not damaged.

192 Code -

Reason: Coolant level monitor, short circuited to positive (+).

Reaction: None.

Action:

- Check that the coolant level monitor cable is not damaged.
- Check that the coolant level monitor sensor is correctly installed.

231 Code -

Reason: Input for pre-heating request. Short circuit to negative (-).

Reaction: Pre-heating can not be activated.

Action:

- Check that the pre-heating switch cable and connector are not damaged.

233 Code -

Reason: Faulty data link (J1708), CIU.

Reaction: Diagnostic codes from engine can not be read on diagnostic lamp.

Action:

- Check that the 8-pin connector is not damaged.
- Check that the cables between the CIU and the engine management unit (EMS) are not damaged.
- Check that pin/sleeves 22 and 37 in the connector on the CIU are not damaged.

Notes

Notes

Notes

References to Service Bulletins

Group	No.	Date	Reference

Report form

Do you have any comments or complaints about this manual? Please take a copy of this page, write your comments on it and send it to us. The address is at the bottom. We would appreciate it if you were to write in English or Swedish.

From: .....

.....

.....

.....

Refers to publication: .....

Publication no: ..... Date of issue: .....

Suggestion/Motivation: .....

.....

.....

.....

.....

.....

.....

.....

.....

Date: .....

Name: .....

AB Volvo Penta
Teknisk Information
Avd. 42200
SE-405 08 Göteborg
Sweden

7741497-7 English 07-2001

Electric Fuel Control Governor Cummins Diesel Engine

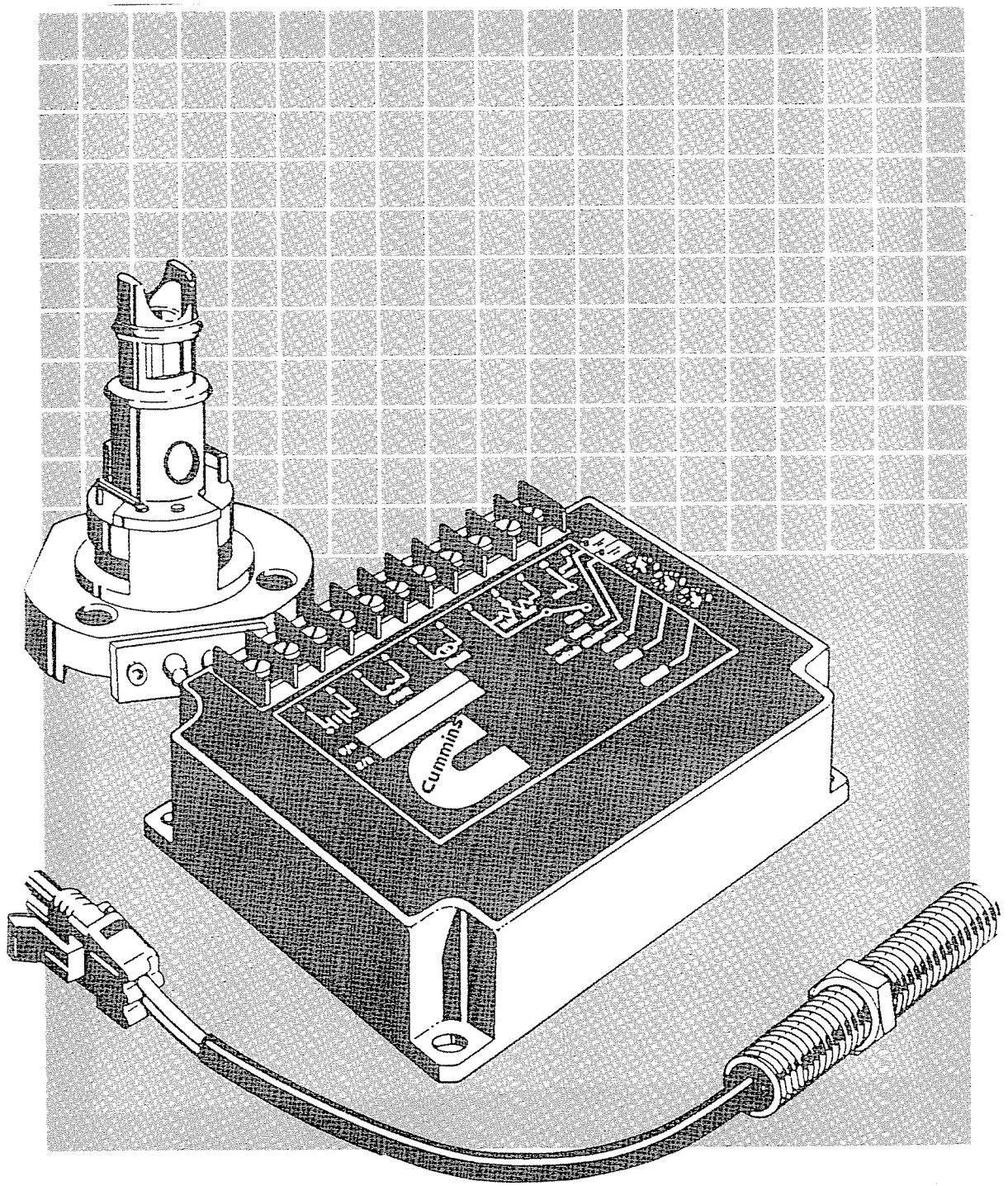

Copyright© 1986
Cummins Engine Company, Inc.

Bulletin No. 3379231-03, Printed 9-86

Foreword

The Electric Fuel Control (EFC) governor is used on the PT (type G) fuel system. The governor can be adjusted for isochronous or droop governing applications. The governor is available with normally open (fail to the open position) or normally closed (fail to the closed position) system.

This publication contains the instructions for the installation, adjustment, and troubleshooting of the Cummins EFC governor on a generator set or a generator drive application.

Contents

	Page
EFC Governor Description	3
Magnetic Pickup Installation	4
Power Source	8
Actuator Description	9
Fuel Flow Through the Fuel Pump	9
Actuator Identification	10
EFC Fuel Pump Housing	11
Actuator Removal from an EFC Housing	12
Actuator Installation in an EFC Housing	12
Actuator Installation in an AFC Fuel Pump Housing	16
System Adjustments - Panel Mounted Control	20
System Adjustments - Remote Mounted Control	28
Load Sharing Control Wiring Diagram	30
Two Generator Set Wiring Diagram	33
Graphic Symbols	34
Glossary of Terms	36
Component Specifications	42
Parts Tables	43
EFC Troubleshooting Charts	45
Service Publications	52
Literature Comment Post Card	54

Service Tools (or Equivalent) Required

Tool Number	Tool Name
ST-752	Mechanics Hand Tool Set
3377462	Digital Tachometer
3376898	Electrical Multitester
3376613	Potentiometer Screwdriver
3376897	Cycle (Frequency) Meter
	24 Volt DC Batteries

Electric Fuel Control Governor

Governor Description

The governor contains a magnetic pickup, a governor control, an actuator and the mounting parts.

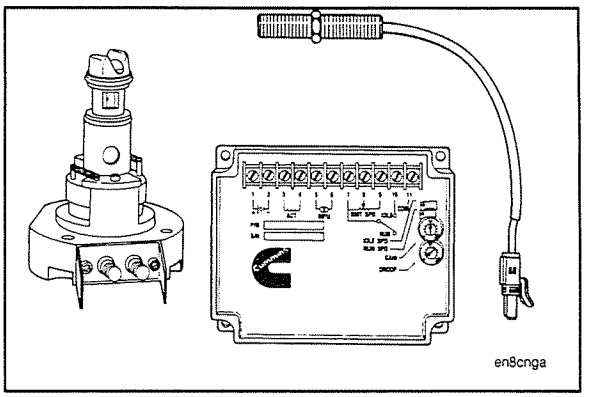

The governor is available with normally open or normally closed governor systems.

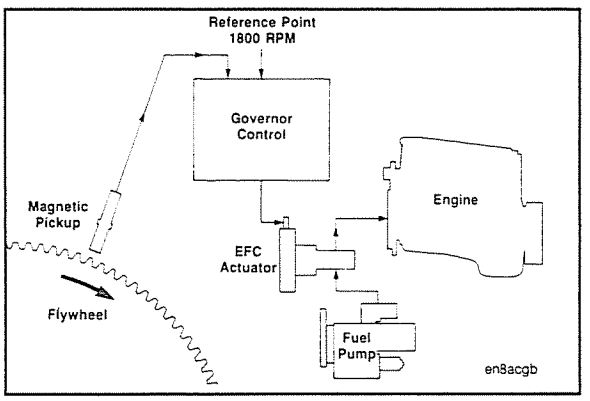

The magnetic pickup senses engine speed at the flywheel ring gear and sends an alternating current (A.C.) electrical signal to the governor control.

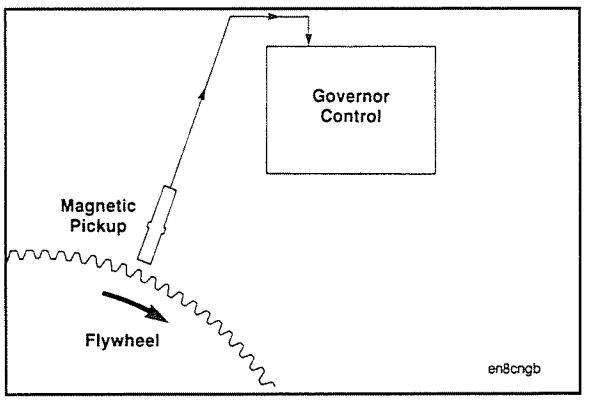

The governor control compares the electrical signal from the magnetic pickup with a preset reference point. If there is a difference in the two signals, the control will change the current to the actuator.

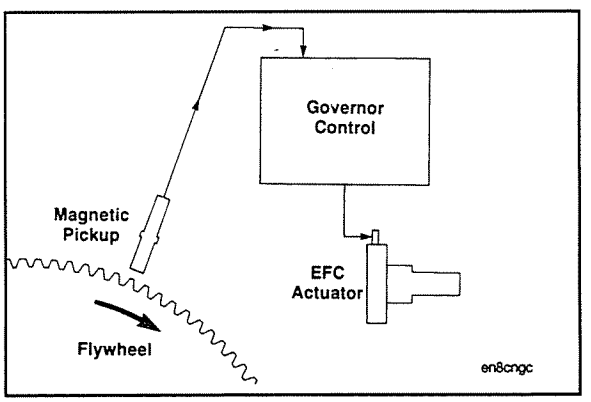

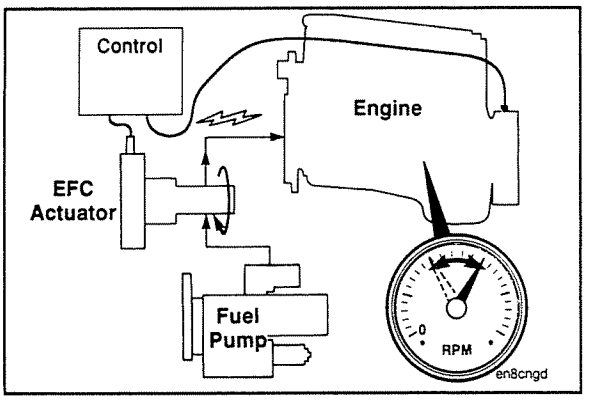

The change in current in the actuator coil will make the actuator shaft rotate. The fuel flow, and engine speed or power will change when the actuator shaft rotates.

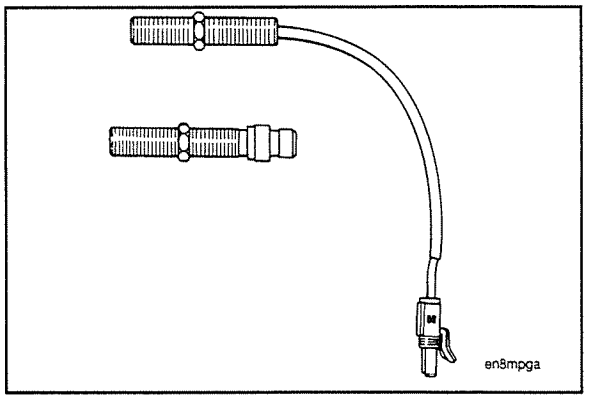

Magnetic Pickup Installation

The magnetic pickup is an electromagnetic device. The pickup is mounted in the flywheel housing. There are two types of magnetic pickups.

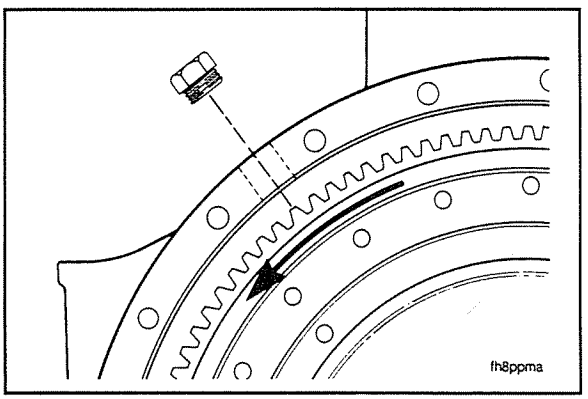

Remove a pipe plug from the flywheel housing that aligns with the flywheel gear teeth. Rotate the flywheel to center a gear tooth below the magnetic pickup hole, if necessary.

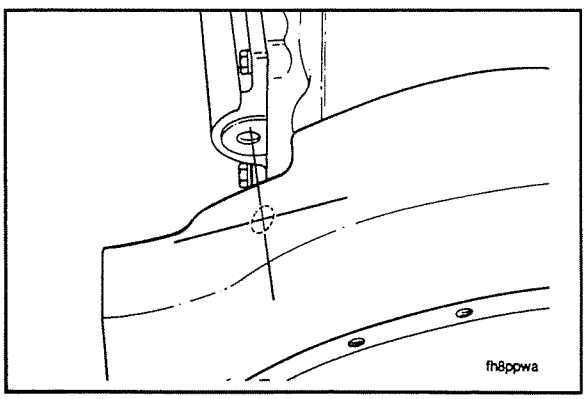

If the flywheel housing does not have a pipe plug that aligns with the flywheel gear teeth, drill and tap a hole in the housing.

NOTE: The drill chips must be removed from the flywheel housing. The main generator must be removed to clean the chips out of the housing.

1. The hole must be perpendicular to the gear teeth. The hole can be over any part of the gear teeth.

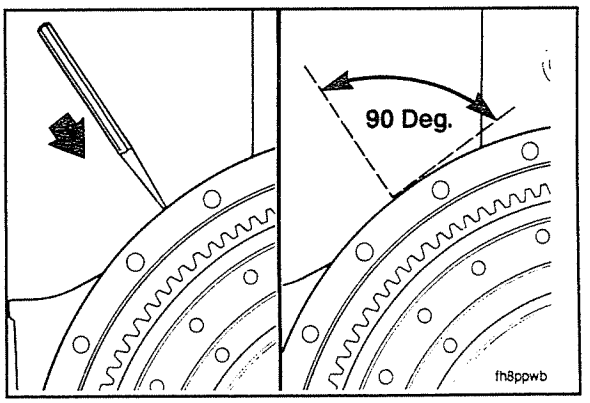

2. Drill a 37/64 inch [14.7 mm] hole in the housing.

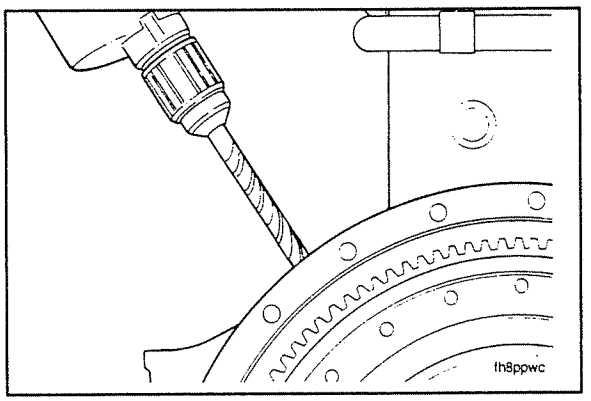

3. Tap the hole with a 5/8-18 UNF-2A size tap.

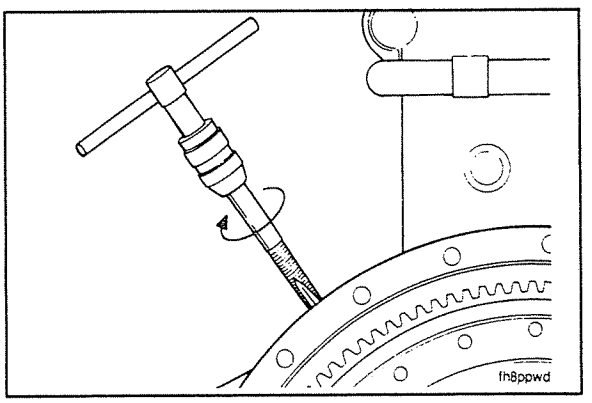

4. Remove the chips with a magnet if the housing is cast iron.
5. Remove the chips with compressed air if the housing is aluminum.

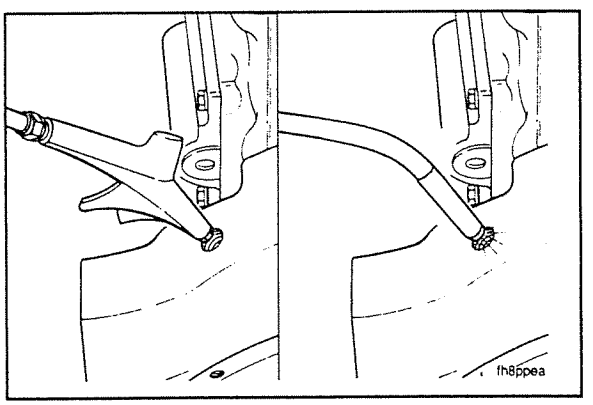

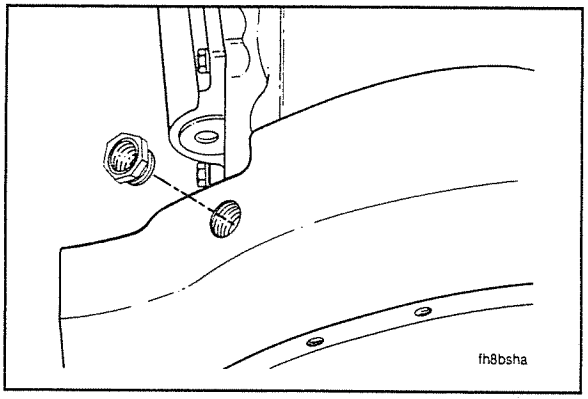

If the housing has a 3/4-16 UNF hole, install a bushing in the hole to reduce the threads to 5/8-18 UNF-2A.

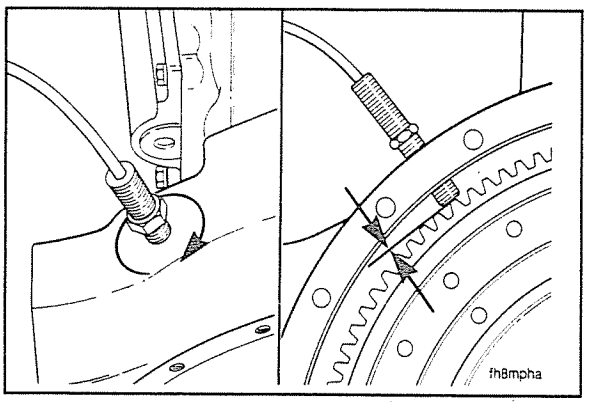

Screw the magnetic pickup all of the way down until it contacts a flywheel gear tooth. The pickup will screw in very easy, do not use excessive pressure to install the pickup.

NOTE: If the pickup does not screw in with finger pressure, check the hole and the pickup threads. Tap the hole again, if required. Refer to the previous page for the chip removal procedure.

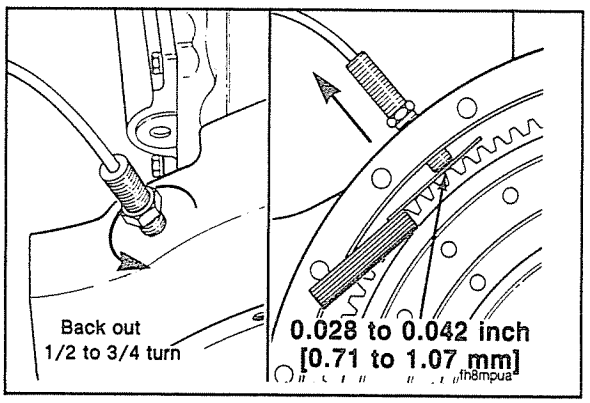

Back the pickup out 1/2 to 3/4 of a turn.

If you can get a feeler gauge between the magnetic pickup and the flywheel gear tooth, back the pickup out 0.028 to 0.042 inch [0.71 to 1.07 mm] from the flywheel gear tooth.

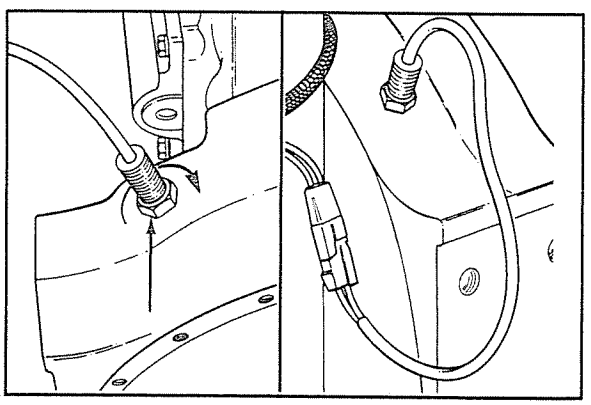

Tighten the locknut down on the flywheel housing.

Plug the electrical connection into the pickup, when required.

Install the main generator, if it was removed.

When the flywheel gear teeth pass the pickup, an A.C. voltage is induced. One cycle is induced for each gear ›oth.

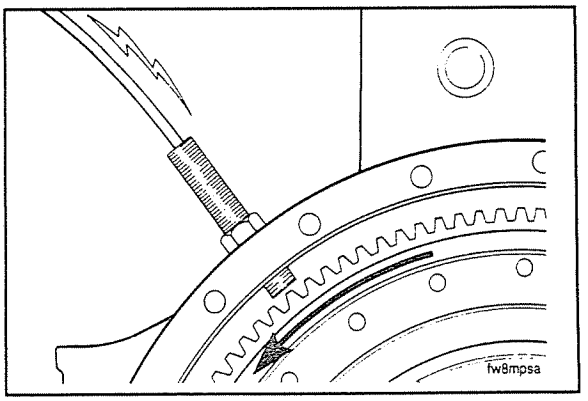

Caution: Measure the voltage of the panel mounted governor control on the engine control terminal strip. Do not measure the voltage on the control terminal strip. If two terminals on the panel mounted governor control terminal strip are shorted, it can damage the control unit.

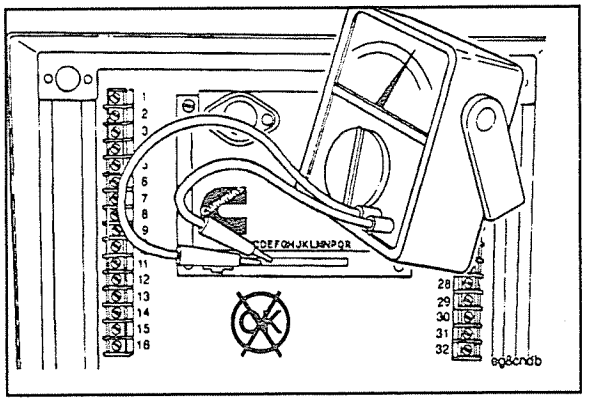

Check the magnetic pickup voltage on terminals 13 and 14 on the engine control terminal strip inside the engine mounted instrument panel.

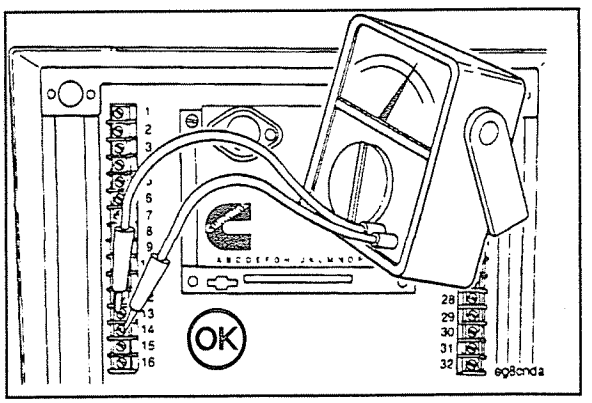

If a remote mounted control is in use, check the magnetic pickup voltage on terminals 5 and 6.

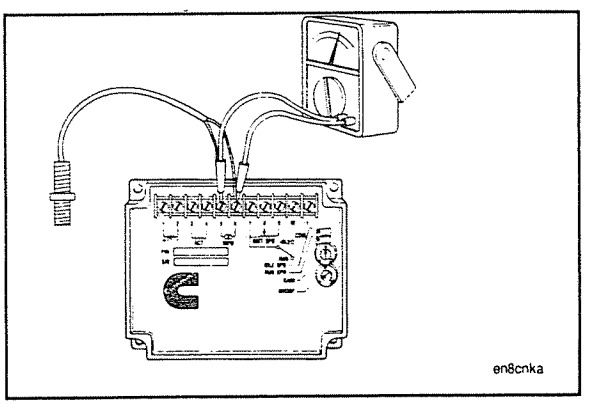

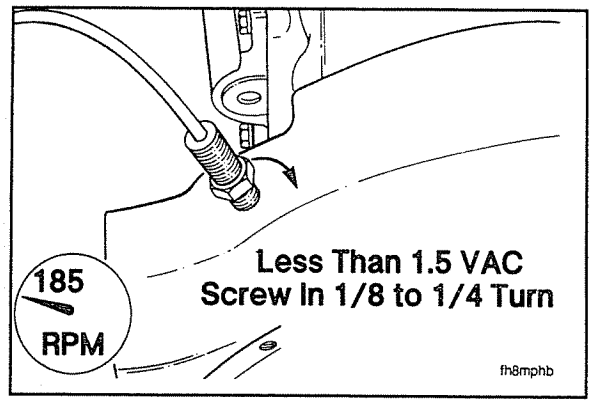

If the pickup signal is less than 1.5 volts AC when cranking the engine, screw the pickup in 1/8 to 1/4 turn.

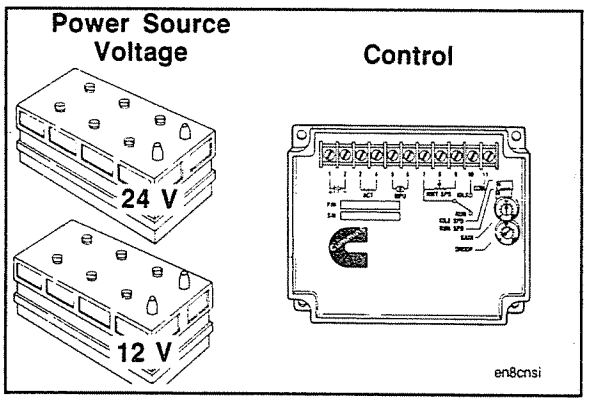

Power Source

The governor control can operate on either 12 or 24 volts D.C.

A normally closed control must be used with a normally closed actuator.

A normally open control must be used with a normally open actuator.

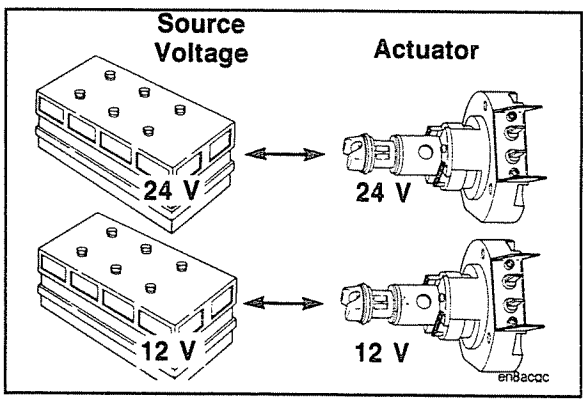

The actuators can have a rating of 12V. or 24 V.-D.C. The source (battery) voltage at the control must be the same as the voltage rating of the actuator.

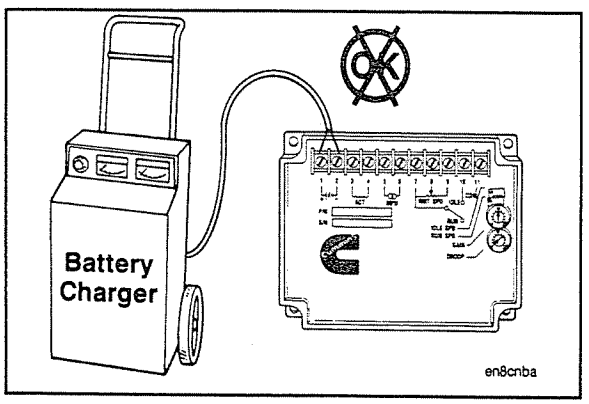

Caution: Do not connect the governor control to a battery charger. Due to the circuitry and method of operation of the chargers, the governor will not function properly. Connect the battery charger to the battery.

NOTE: See the panel mounted and remote governor control wiring diagrams for the specific wiring. See page 30 and 31.

Actuator Description

The actuator is an electromagnetic rotary solenoid valve. The actuator is installed in the EFC cavity of the PT fuel pump. The actuator controls the engine speed and horsepower by controlling the fuel flow to the injectors.

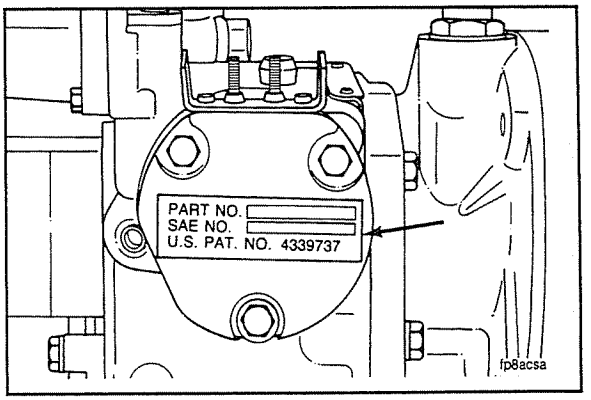

The actuator shaft will turn when the current from the governor control changes.

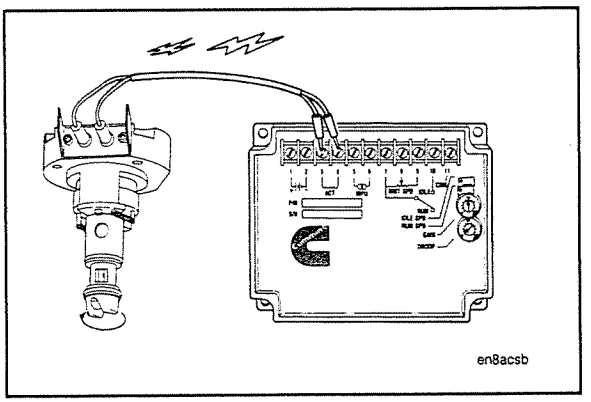

The current from the governor control will change when the magnetic pickup senses a change in the engine speed.

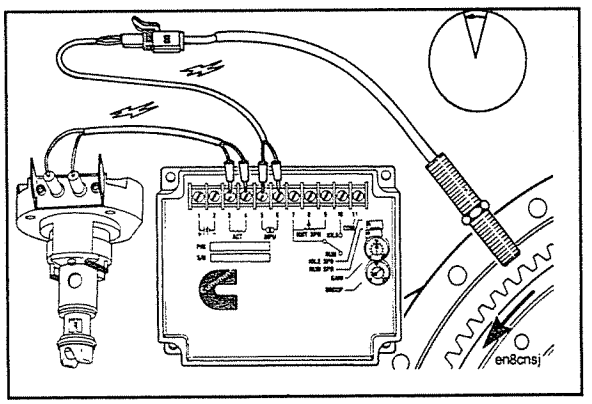

Fuel Flow Through the Fuel Pump

The throttle shaft is set in the full open position. The fuel flows through the fuel pump to the actuator (EFC) cavity.

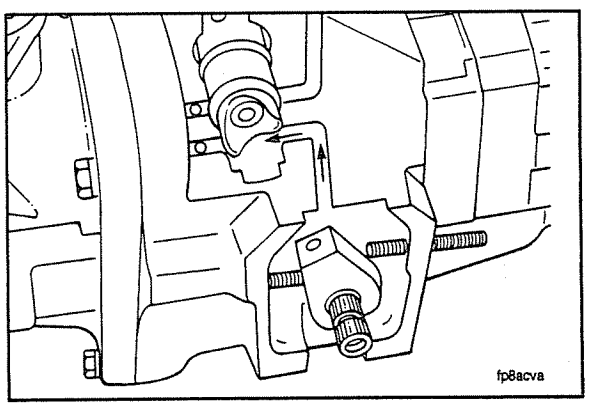

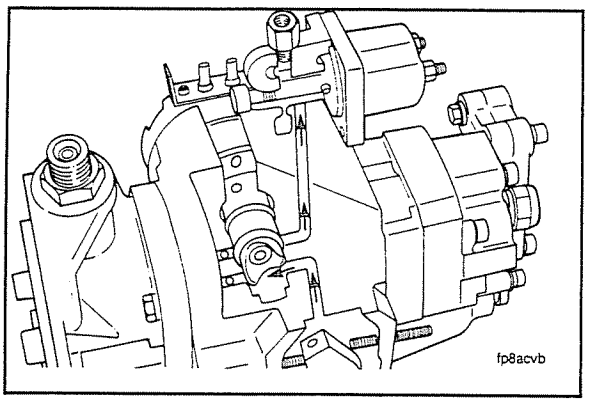

The actuator controls the fuel flow to the injectors.

The fuel flows through the actuator to the shutoff valve.

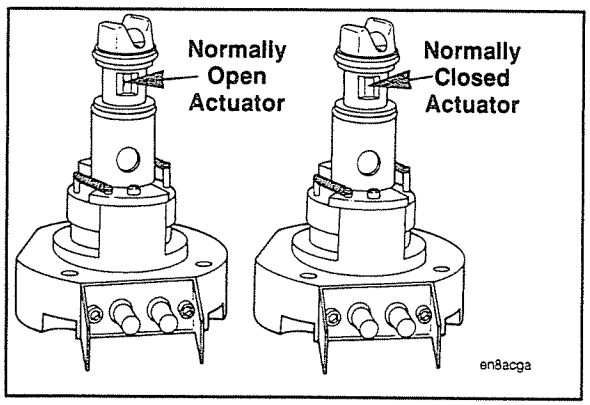

Actuator Identification

Two styles of the actuator are now available.

a. Normally open

b. Normally closed

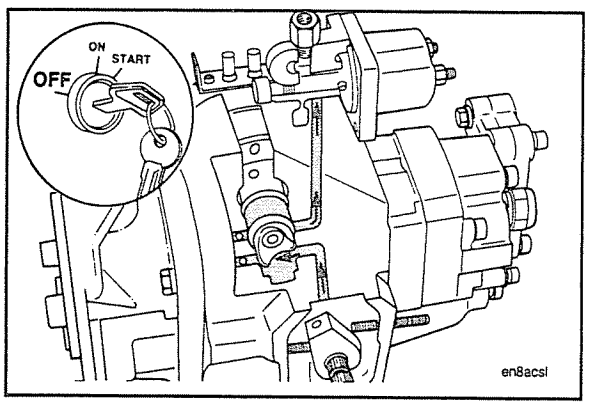

The normally open actuator is in the full fuel position when the electrical system is turned off.

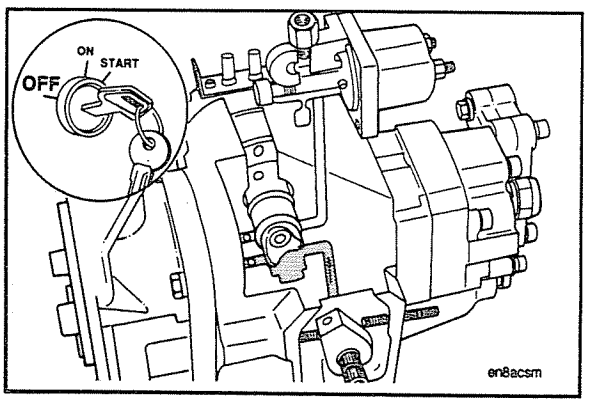

The normally closed actuator will stop the fuel flow when the electrical system is turned off.

The actuators are available in low, high, and ultra high flow.

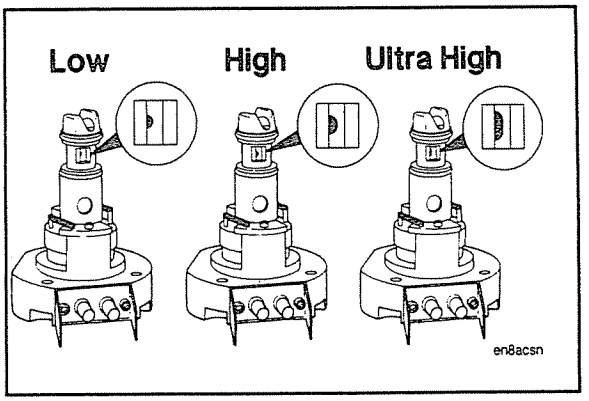

The actuators are rated at 12 or 24 volts D.C.

Make sure the governor control voltage is the same as the actuator voltage rating.

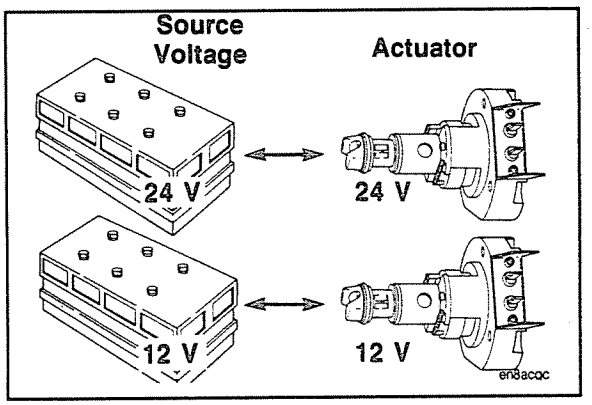

EFC Fuel Pump Housing

When a new EFC fuel pump is built at Cummins, the pump will have an EFC housing.

The EFC fuel pump housing can be identified in the following areas:

The AFC no-air adjusting screw hole has been omitted.

The ASA or AFC vent hole, in the top of the housing has been omitted.

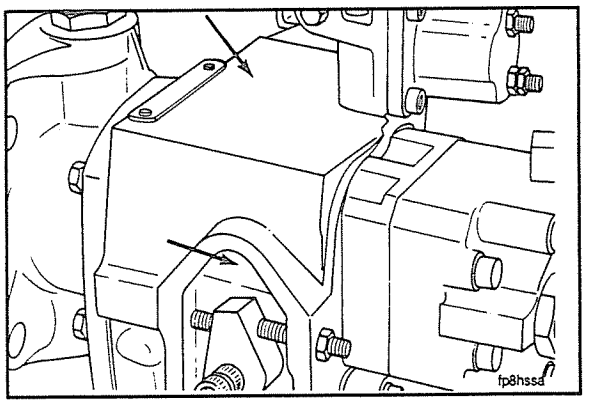

The AFC spring seat groove is not machined.

A 45° chamfer is at the EFC actuator mounting surface.

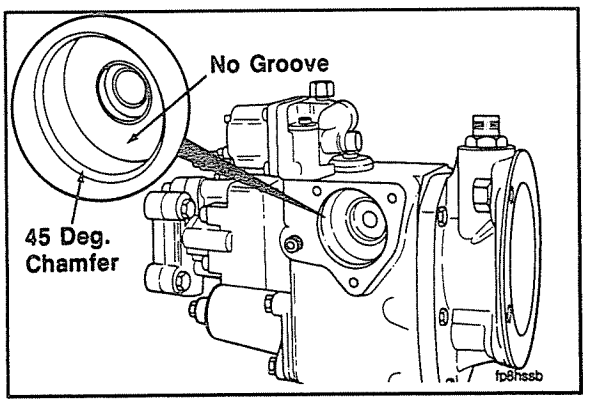

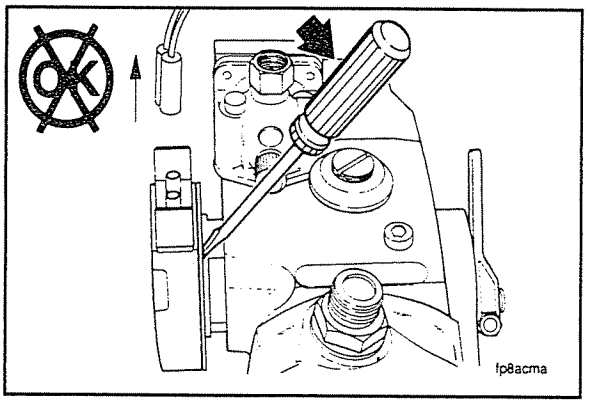

Actuator Removal From an EFC Fuel Pump Housing

Remove the actuator wires and capscrews.

Caution: Do not pry the actuator from the housing.

This can damage the actuator shaft and make it stick.

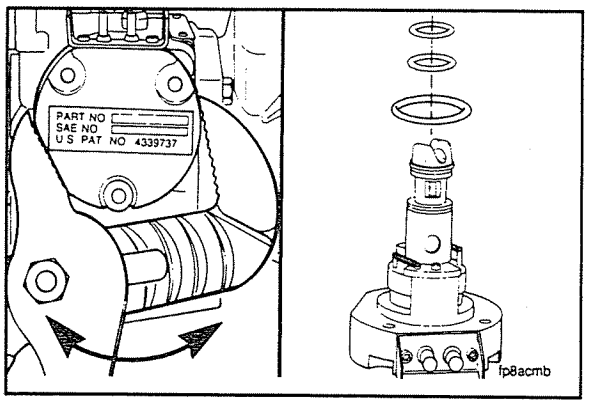

Twist the actuator and pull it from the housing.

Remove the three O-rings from the actuator.

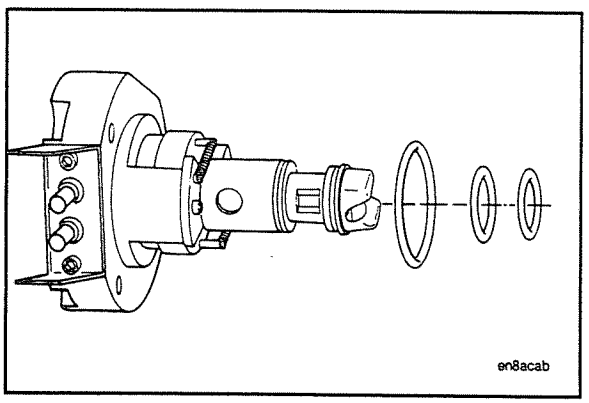

Actuator Installation in an EFC Fuel Pump Housing

Install a new O-ring on the 50 mm [2 in.] diameter of the actuator.

Install two new O-rings on the actuator barrel.

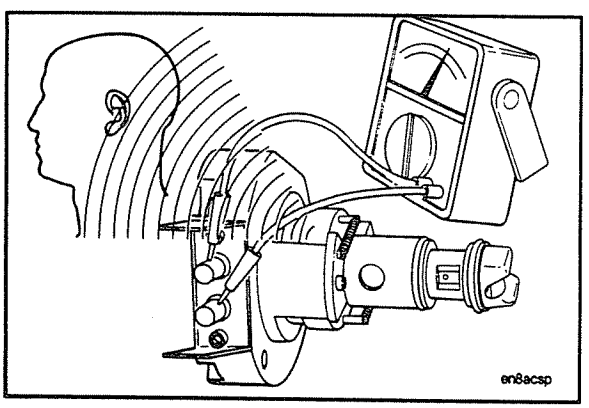

Apply the actuator rated battery voltage across the two terminals on the actuator to test the solenoid and to observe actuator operation. The actuator will make a loud click when the actuator shaft hits the internal stop. Removing the voltage from the actuator terminals will allow the force of the springs to return the actuator shaft to its original position. A click must be heard when the voltage is removed.

NOTE: The EFC housing does not require the EFC plug in the bottom of the EFC housing bore.

Lubricate the two barrel O-rings with clean engine oil.

Insert the actuator in the fuel pump housing. The actuator flange will be approximately 3/8 inch [9.5 mm] from the fuel pump housing.

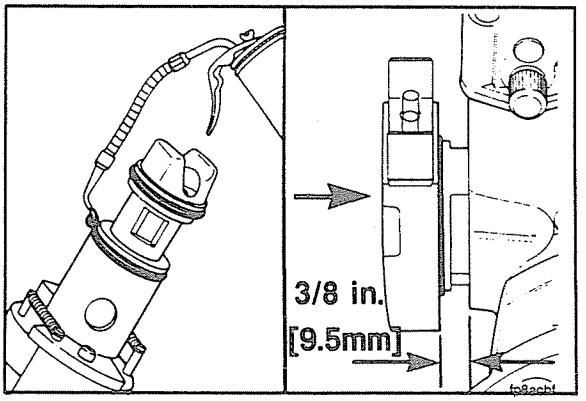

Use the palm of the hand. Firmly push and rotate the actuator approximately 30 degrees until the actuator flange contacts the fuel pump housing.

Rotate the actuator until the mounting holes are aligned.

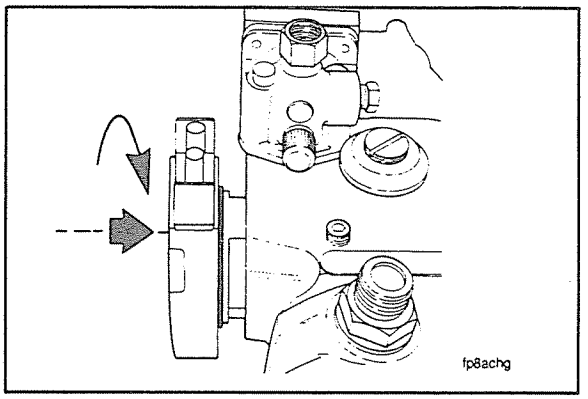

Install the three 1/4-20 x 1 1/4 inch hex head capscrews. These capscrews have captive spring washers and do not require lockwashers. Tighten the capscrews until they are finger tight.

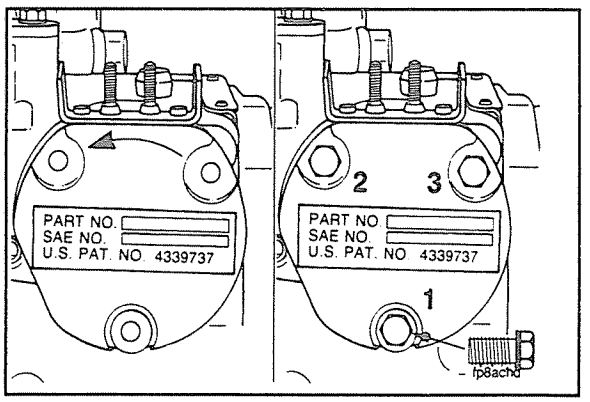

The actuator capscrews must be tightened in the following sequence:

1. Tighten the mounting capscrews 1/8 of a turn, in the sequence shown in the figure, until they are seated.

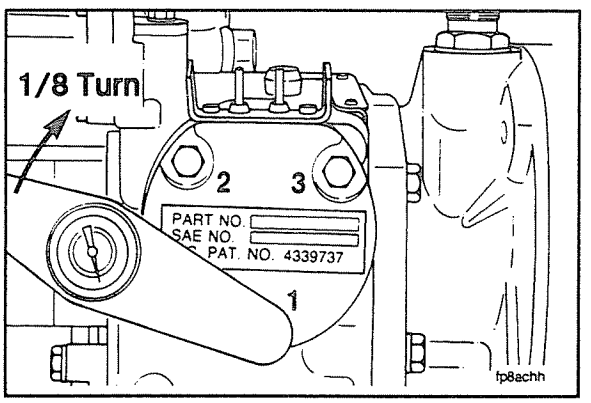

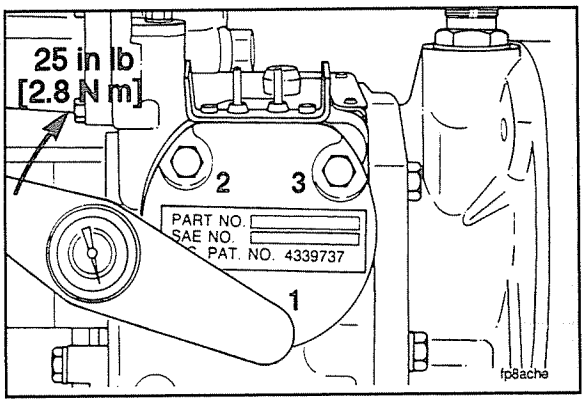

2. Tighten the capscrews in sequence to 25 in-lb [2.8 N•m] torque.

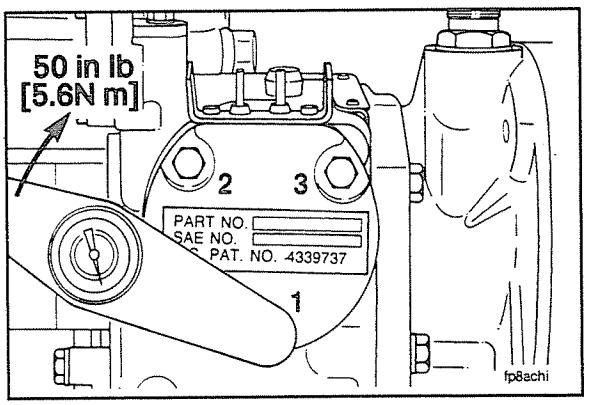

3. Tighten the capscrews in sequence to a torque of 50 in-lb. [5.6 N•m].

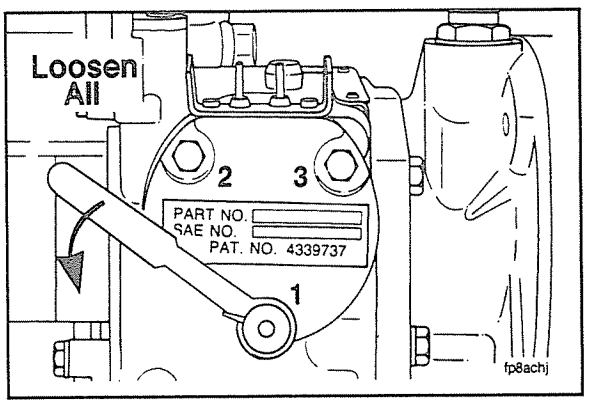

4. Loosen all three capscrews completely.

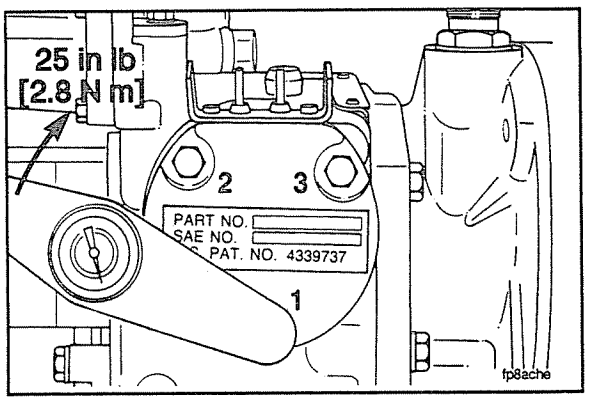

5. Tighten the capscrews again in sequence to 25 in.lb. [2.8 N•m] torque.

6. Tighten the capscrews again in sequence to 50 in.lb. [5.6 N•m] torque.
7. This procedure will make sure that the actuator is properly installed and is not binding.

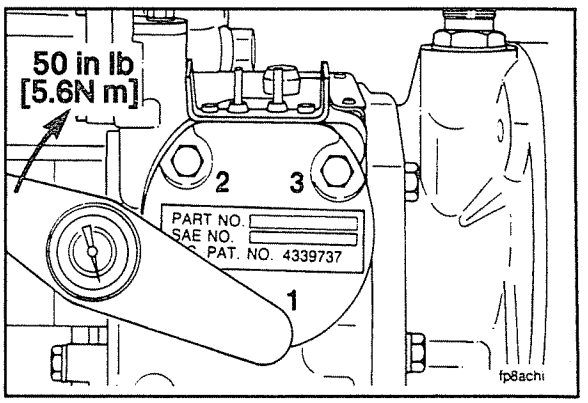

A final check is to apply and remove battery voltage across the two actuator terminals. The operation of the actuator must have a similar sound as it did before installing in the fuel pump housing. If the actuator does not click, as if it is not operating, or operating slower than before, loosen all of the capscrews and tighten them again as described in the previous procedure.

Caution: This test will only verify that the actuator will go from the full open to the full closed position. A slight binding of the actuator shaft can cause a governor stability complaint. This test may not detect a slight binding.

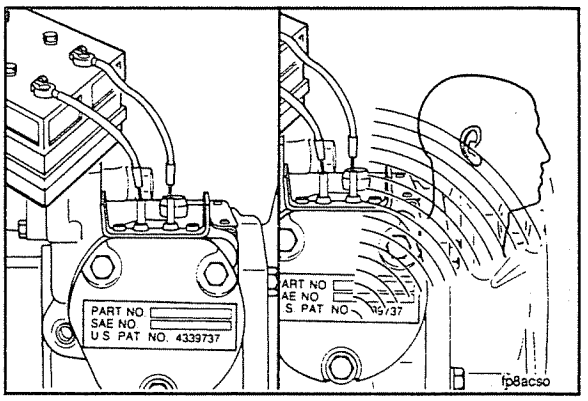

The fuel pump can now be calibrated (Refer to the Fuel Pump Calibration Manuals or the monthly Cumulative Supplement Update).

NOTE: Apply the actuator rated battery voltage to the normally closed actuator when the fuel pump is calibrated.

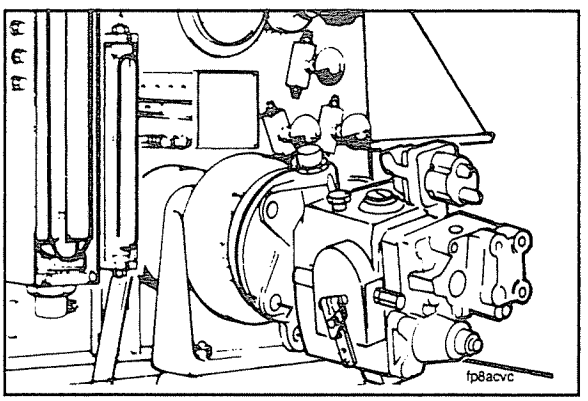

The throttle shaft must be locked in the full open position. After the calibration, the fuel pump can be mounted on the engine.

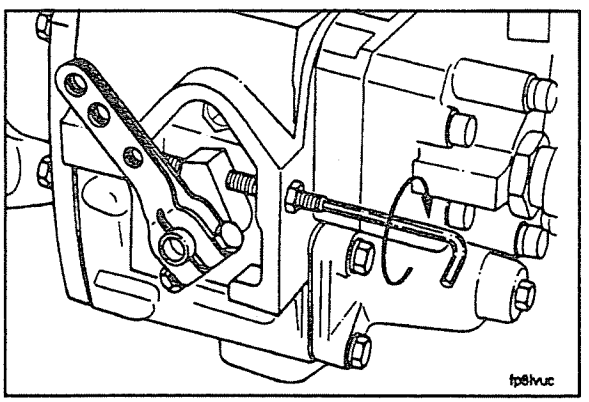

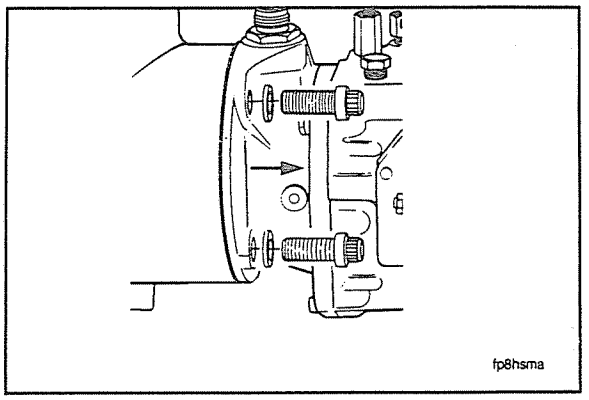

Actuator Installation in an AFC Fuel Pump Housing

Remove the fuel pump if it is on the engine.

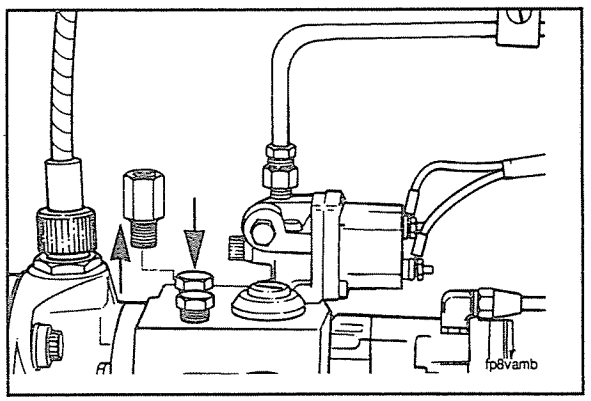

Remove the ASA, if required, and the AFC fuel drain tube. Install a plug in the housing. Install a plug in the fuel drain tube connection.

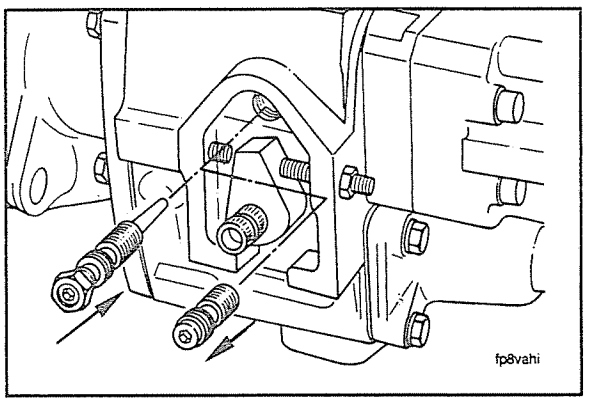

Remove the AFC no-air plug, if the fuel pump does not have an AFC. Replace it with the no-air needle valve. The AFC no-air plug is located directly above the throttle shaft.

Tighten the AFC no-air needle valve in the housing to 25 in. lb. [2.8 N•m]. Tighten the jam nut.

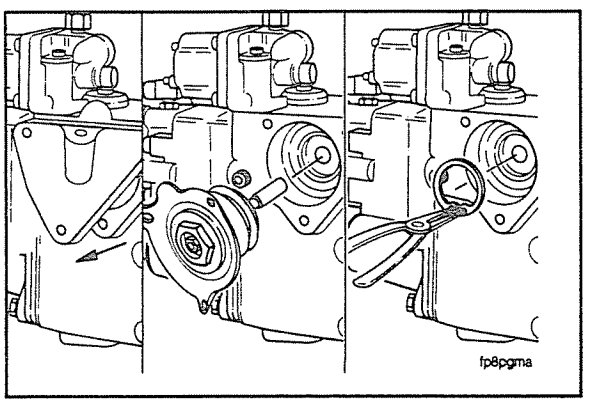

Remove the AFC cover plate. Remove the AFC bellows/plunger assembly, if required. Use a pair of snap ring pliers to remove the barrel or barrel plug snap ring.

Thread one of the previously removed 1/4-20 capscrews into the AFC barrel plug. Pull out the barrel plug with a pair of pliers. Discard the three original AFC cover plate capscrews.

If the fuel pump has a functional AFC, use the AFC barrel puller, Service Tool 3375599 to remove the barrel. The AFC cannot be used with an EFC governor. The AFC cavity is now ready for the installation of the EFC governor actuator.

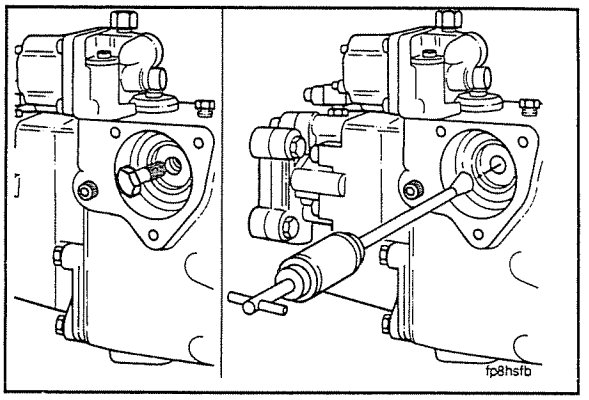

Install the O-ring plug on the Governor Plug Tool, Part No. 3376457, approximately three turns. Install the O-ring on the plug.

Caution: : Do not tighten the O-ring plug to the plug tool or the tool can not be removed after the plug is inserted in the pump AFC cavity.

Lubricate the O-ring with clean engine oil.

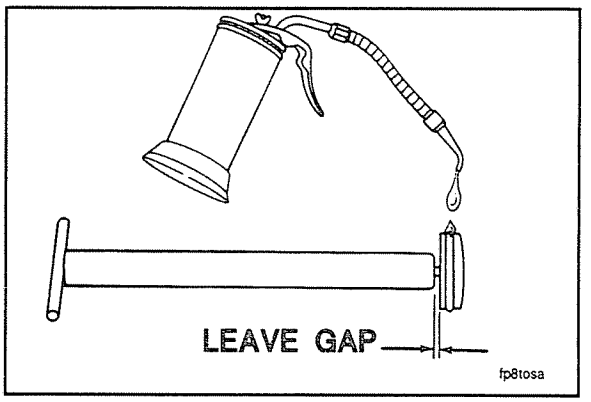

Press firmly until the O-ring plug is seated in the pump housing.

Carefully unscrew the plug tool.

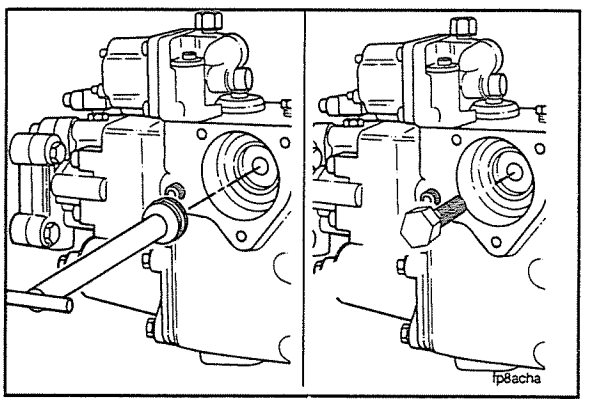

Install the EFC gasket on the actuator. The gasket will fit only one way. The fuel pump side goes against the fuel pump.

Caution: Do not use any gasket adhesive or sealant on this gasket.

Check that all of the mounting holes can be aligned.

Install the O-rings on the shaft.

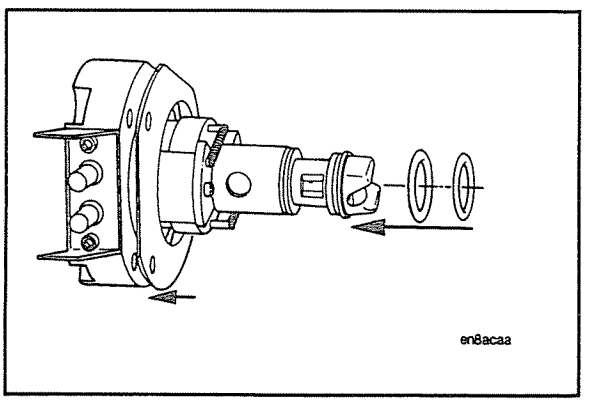

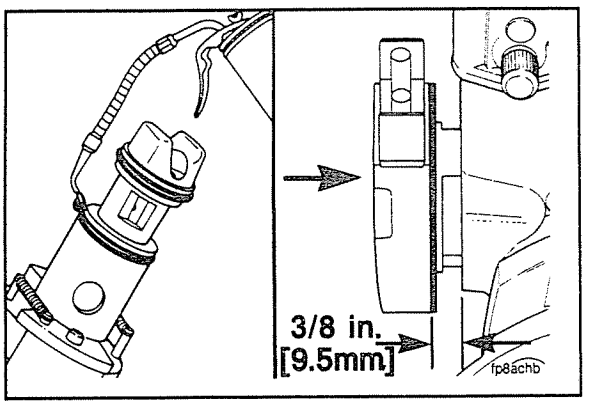

Lubricate the actuator O-rings with clean engine oil. Insert the actuator in the EFC cavity of the fuel pump housing. The actuator flange will be approximately 3/8 inch [9.5 mm] from the fuel pump housing.

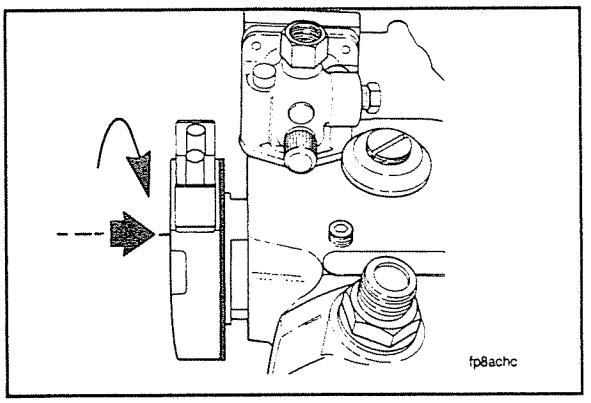

Use the palm of the hand. Firmly push and rotate the actuator approximately 30 degrees until the actuator flange contacts the fuel pump housing.

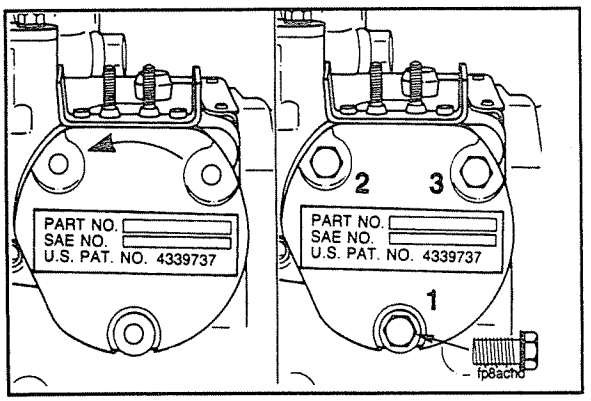

Rotate the actuator until the mounting holes are aligned.

Install the three 1/4-20 X 1 1/4 inch hex head capscrews. These capscrews have captive spring washers and do not require lockwashers. Tighten the capscrews until they are finger tight.

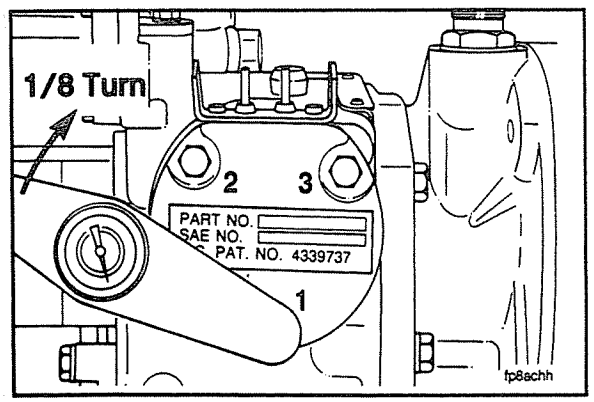

The actuator capscrews must be tightened in the following procedure:

1. Tighten the mounting capscrews 1/8 of a turn, in the sequence shown in the figure until they are seated.

2. Tighten the capscrews in sequence to 25 in-lb [2.8 N•m] torque.

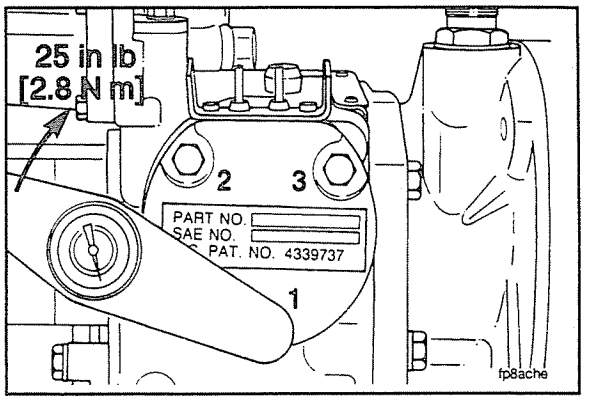

3. Tighten the capscrews in sequence to a torque of 50 in-lb. [5.6 N•m].

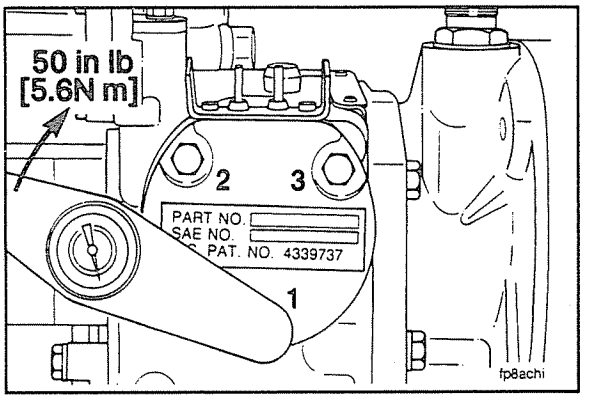

4. Loosen all three capscrews completely.

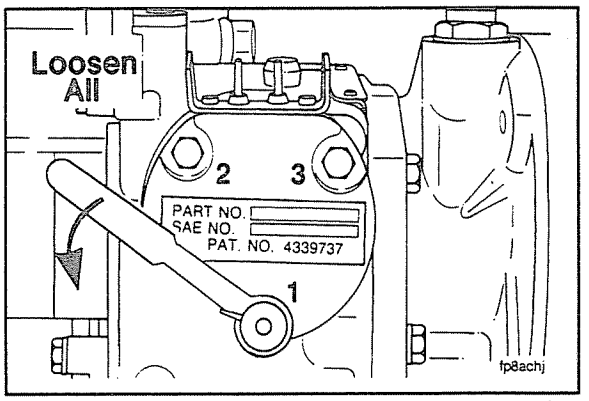

5. Tighten the capscrews again in sequence to 25 in-lb [2.8 N•m] torque.

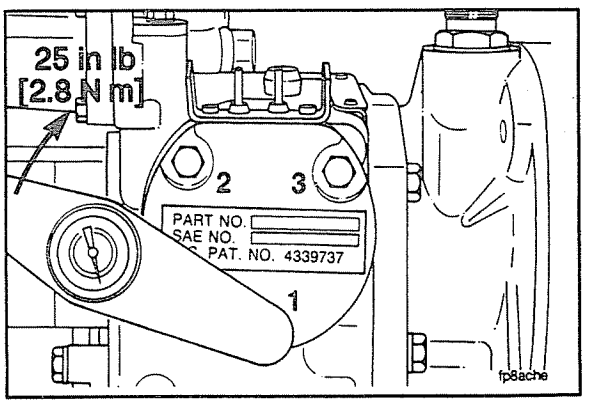

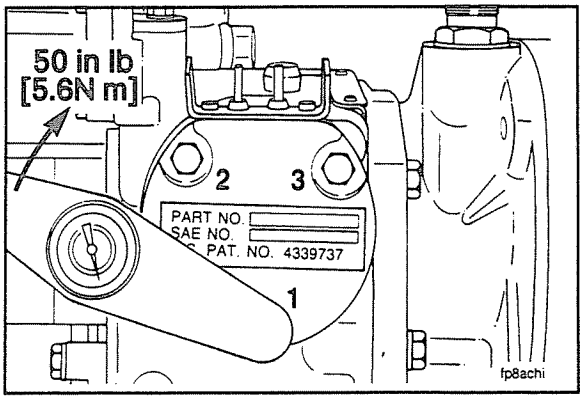

6. Tighten the capscrews again in sequence to 50 in-lb [5.6 N•m] torque.
7. This procedure will make sure that the actuator is properly installed and is not binding.

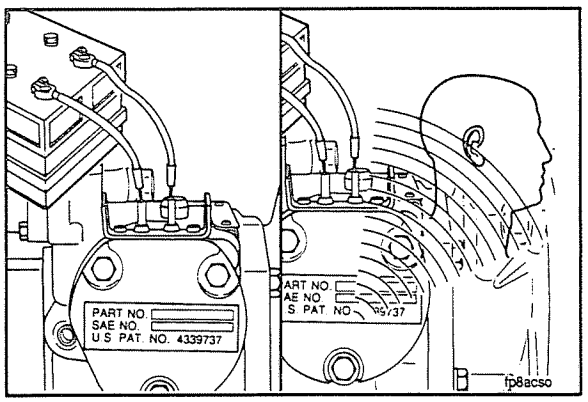

A final check is to apply and remove battery voltage across the two actuator terminals. If the actuator does not click, as if it is not operating, or operating slow , loosen all of the capscrews and tighten them again as described in the previous procedure.

Caution: This test will only verify that the actuator will go from the full open to the full closed position. A slight binding of the actuator shaft can cause a governor stability complaint. This test will not detect a slight binding.

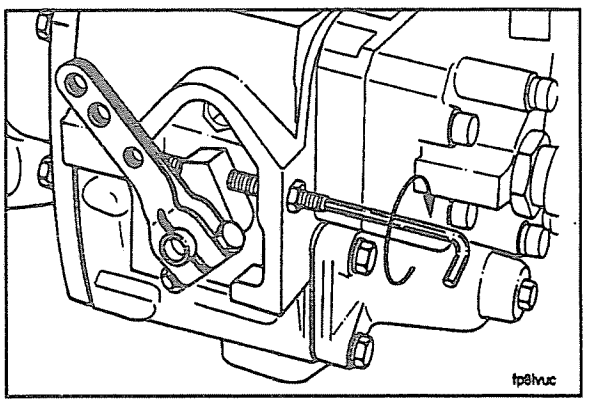

The fuel pump can now be calibrated (Refer to the Fuel Pump Calibration Manuals or the monthly Cumulative Supplement Update). The throttle shaft must be locked in the full open position. After the calibration, the fuel pump can be mounted on the engine.

NOTE: Apply the actuator rated battery voltage to the normally closed actuator when the fuel pump is calibrated.

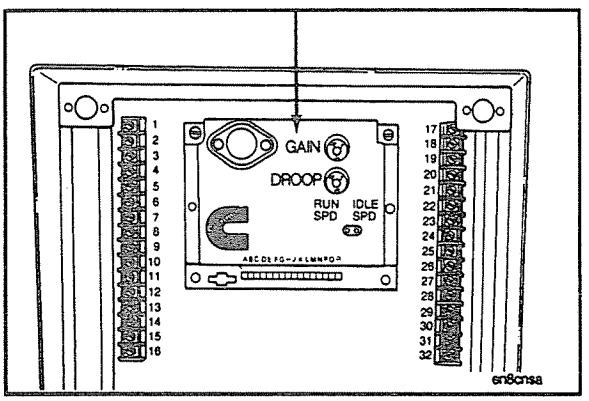

System Adjustments - Single Unit Governor

Panel Mounted Governor Control Adjustments

The panel mounted governor control has four potentiometers for making system adjustments. These components are mounted on the control which is located inside the engine instrument panel or generator control panel.

NOTE: When a two bearing generator or a single bearing generator with a flexible drive between the flex discs and shaft (eg. Kohler 4T10 generators, Models 230ROZ, 250 ROZ and 275 ROZ) is installed, use a remote mounted control. If the engine is not stabile after the gain adjustment is made, install a jumper wire between terminals A and B.

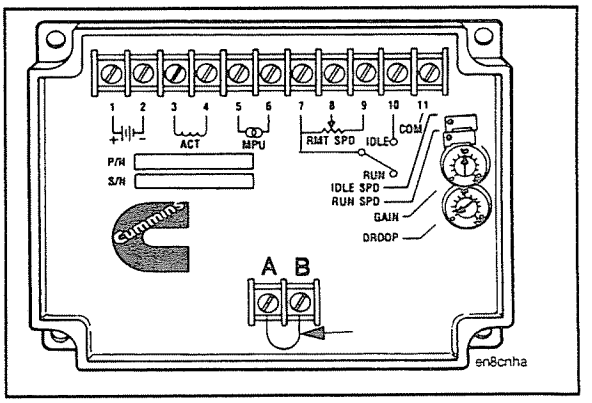

The **gain** control is a one-turn potentiometer. It is used to adjust the sensitivity of the governor. A clockwise rotation of the potentiometer dial will shorten the response time of the governor to load changes. Refer to the glossary for the gain description.

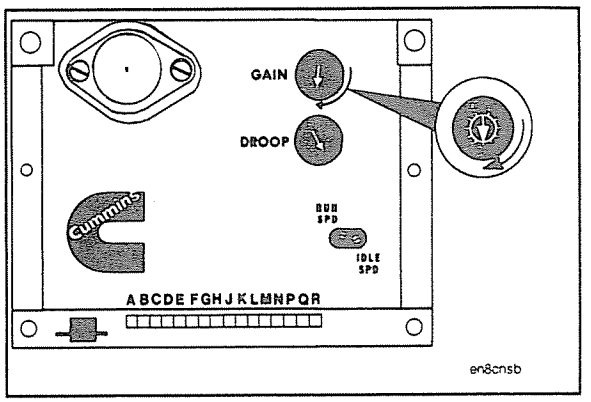

The **droop** control is a one-turn potentiometer. It is adjustable for zero % (isochronous) to five % speed droop. Counterclockwise rotation will decrease the speed droop.

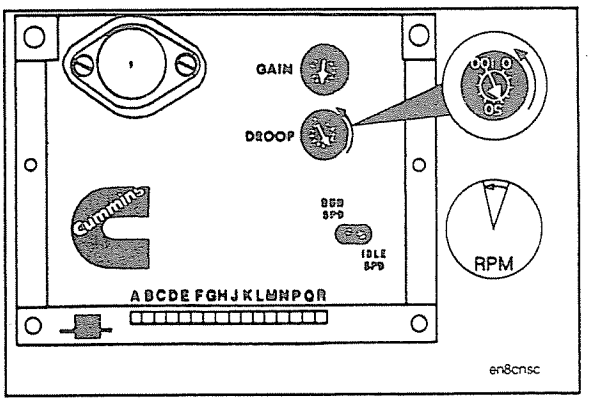

Refer to the glossary for the droop description.

$$\frac{\text{High Idle Speed - Rated Speed}}{\text{Rated Speed}} \times 100\% = \text{Governor Droop}$$

$$\frac{1890-1800}{1800} \times 100 = 5\%$$

$$\frac{1800-1800}{1800} \times 100 = 0\% \text{ (Isochronous)}$$

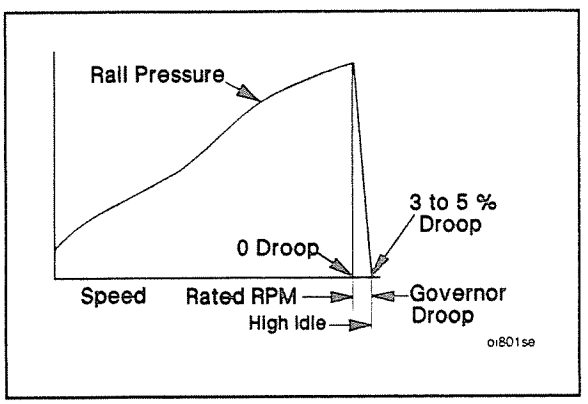

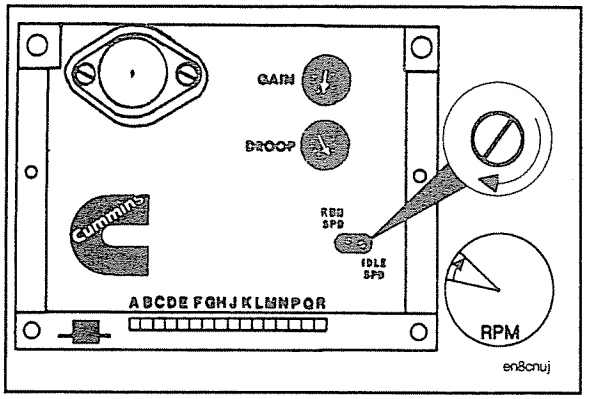

The **idle speed** control is a 20-turn potentiometer for adjusting the idle speed. A clockwise rotation will increase the idle speed.

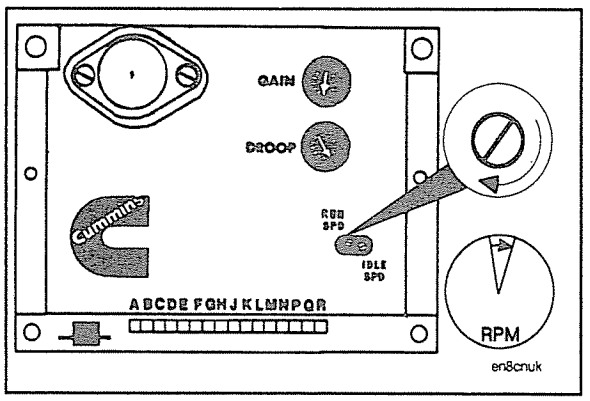

The **run speed** control is a 20 turn potentiometer for setting the desired no-load governed speed. A clockwise rotation will increase the run speed.

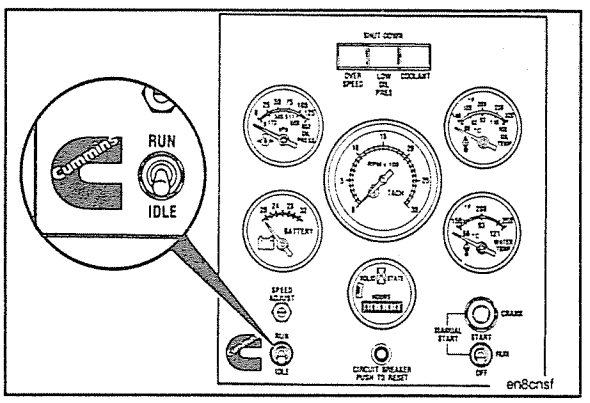

An **idle-run** switch, located on the engine instrument panel, allows the selection of the idle or run mode.

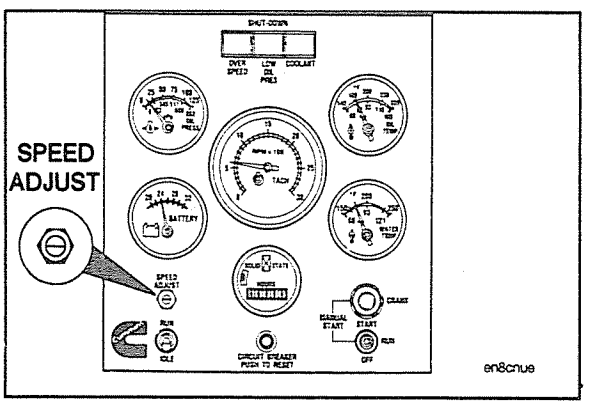

Also located on the engine instrument panel is the **Speed Adjust** potentiometer which is used for fine speed adjustment after **Run Speed, Droop,** and **Gain** have been set.

The panel mounted governor control wiring.

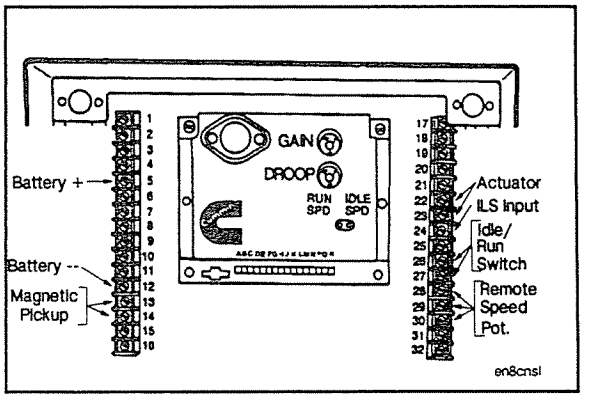

Caution: Measure the voltage on the engine control circuit board terminal strip and not on the control terminal strip. If two terminals on the control terminal strip are shorted, it can damage the control unit.

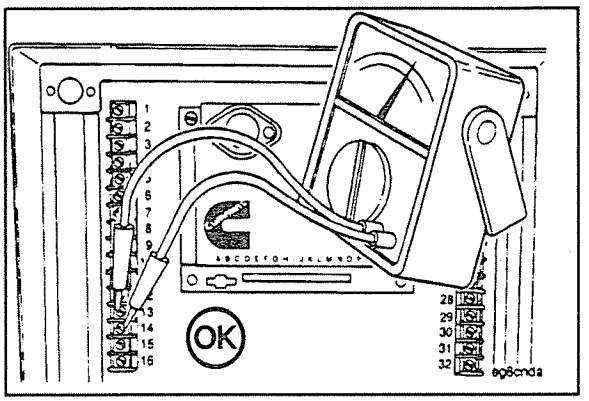

Preliminary Adjustments

The idle speed potentiometer adjustment.

1. Turn the screw counterclockwise 20 turns.
2. Turn the screw clockwise 10 turns.
3. This will set the idle speed potentiometer to its mid position.

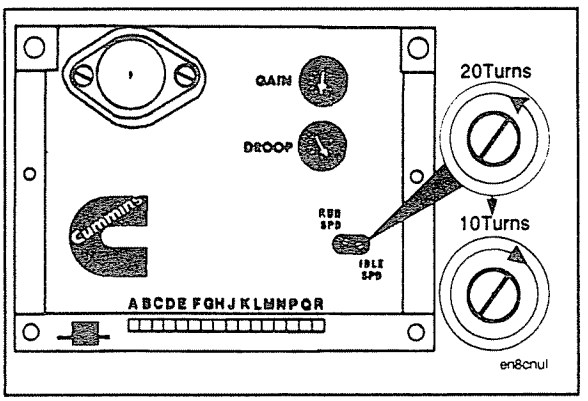

The run speed potentiometer adjustment.

1. Turn the screw counterclockwise 20 turns.
2. Turn the screw clockwise 10 turns.
3. This will set the run speed potentiometer to its mid position.

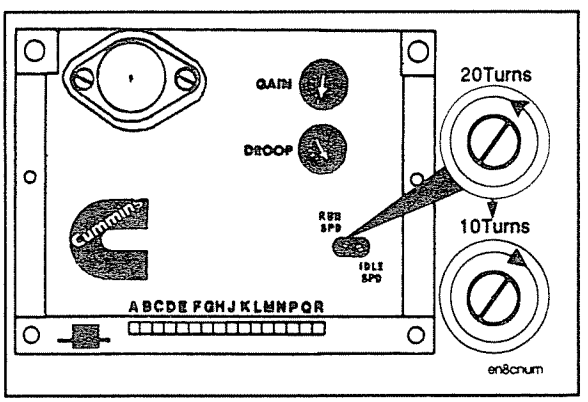

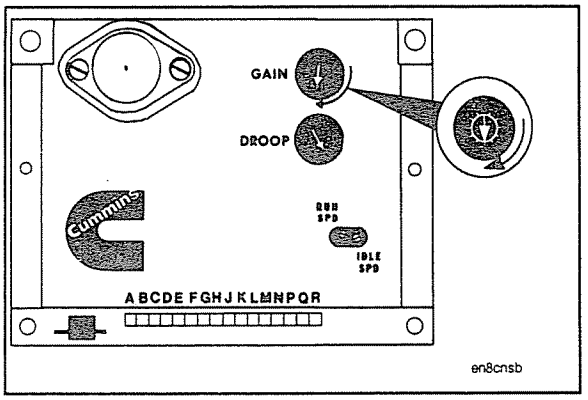

Turn the gain potentiometer adjustment to midposition or 50.

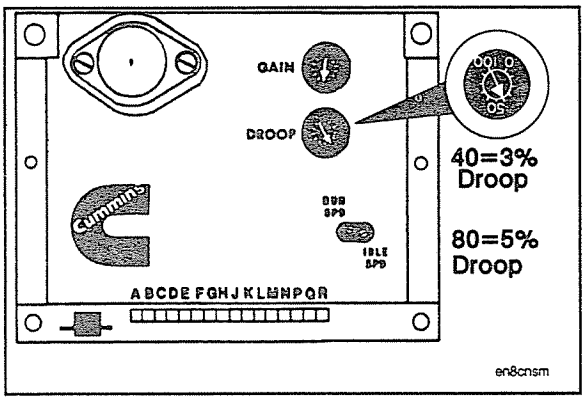

The droop potentiometer adjustment.

1. Turn the potentiometer fully counterclockwise for isochronous operation.
2. Turn the potentiometer to approximately 40 for 3 percent droop.
3. Turn the potentiometer to approximately 80 for 5 percent droop.

Adjust any remote speed potentiometers to the center of their adjustment range.

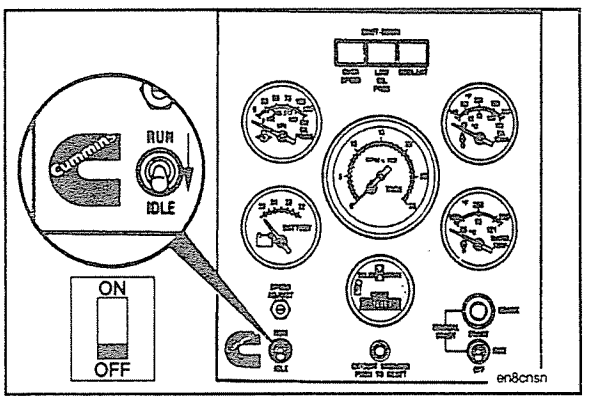

Governed Speed Adjustment

Place the idle-run switch on the engine instrument panel in the idle position.

NOTE: Open the main line circuit breaker while the engine is at idle.

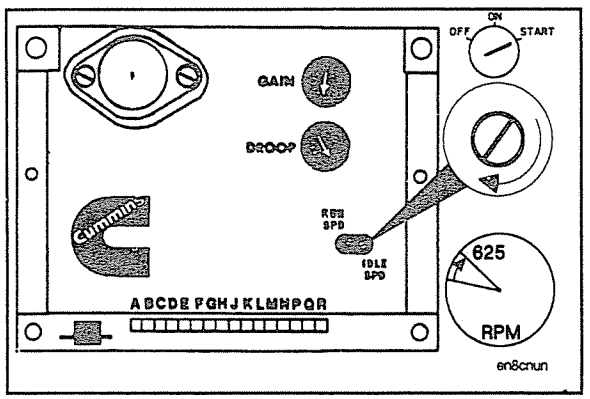

Start the engine. Adjust the idle speed potentiometer on the governor control until the engine is running at 600 to 650 RPM.

Generators which are to operate at 60 Hz full load, must have the engine no load governed speed adjusted to:

60.0 Hz (1800 RPM) for isochronous operation

61.8 Hz (1854 RPM) for 3% speed droop

63.0 Hz (1890 RPM) for 5% speed droop

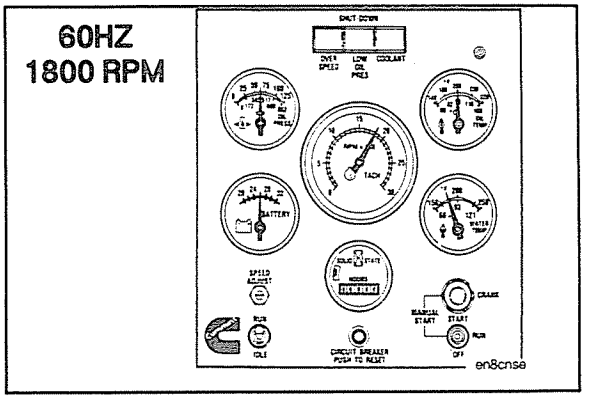

For generators which are to operate at 50 Hz full load, the engine no-load governed speed must be adjusted to:

50.0 Hz (1500 RPM) for isochronous operation

51.5 Hz (1545 RPM) for 3% speed droop

52.5 Hz (1575 RPM) for 5% speed droop

Move the idle run switch to the "Run" position

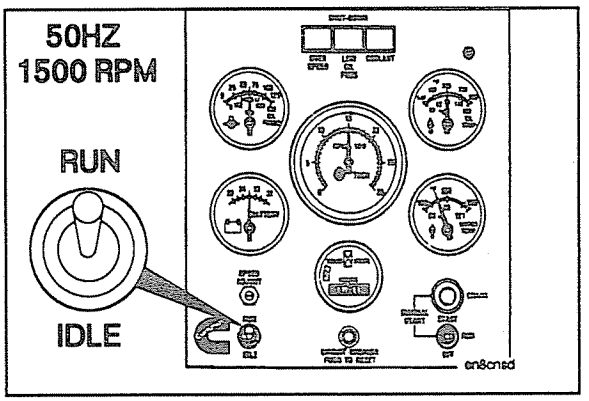

Adjust the run speed potentiometer on the governor control until the no load speed is correct.

NOTE: Close the main line circuit breaker.

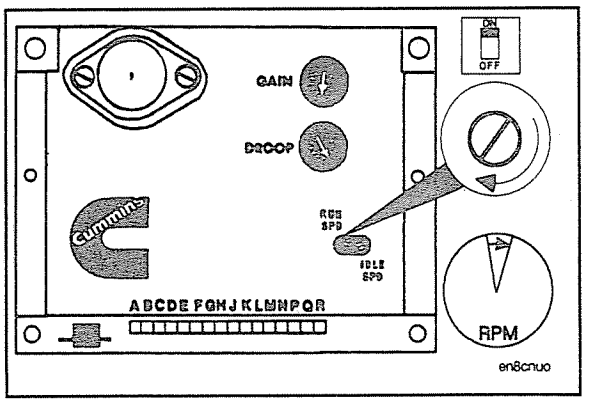

Droop Adjustment - Isochronous Operation

For isochronous operation, the droop potentiometer must be turned fully counterclockwise and will not require any further adjustment.

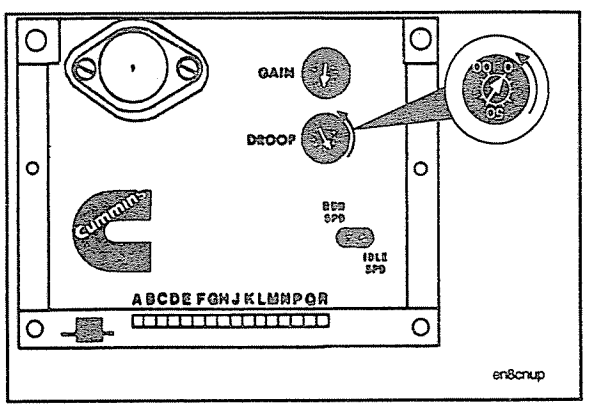

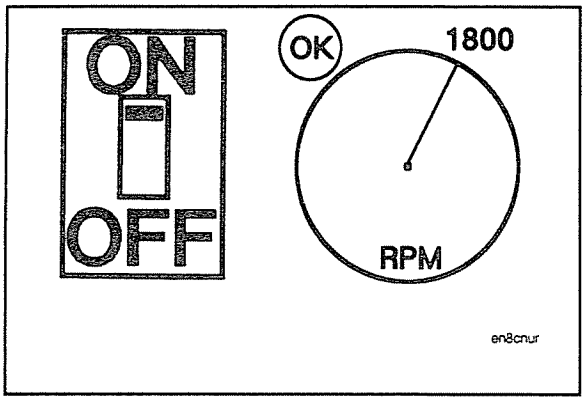

Gain Adjustment

Close the main line circuit breaker and apply approximately 1/4 of the rated load.

Make sure the engine speed is constant.

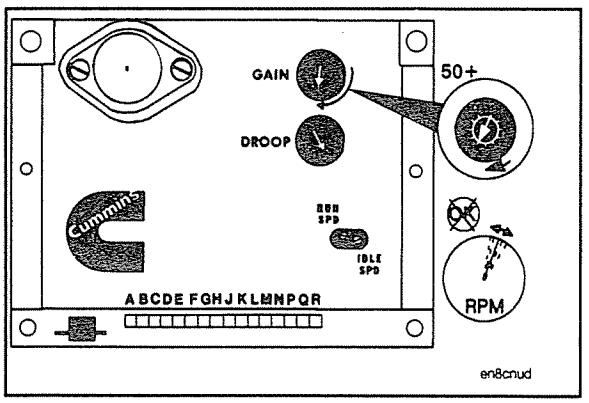

If the engine speed is constant, turn the GAIN potentiometer clockwise slowly until the engine speed is not constant.

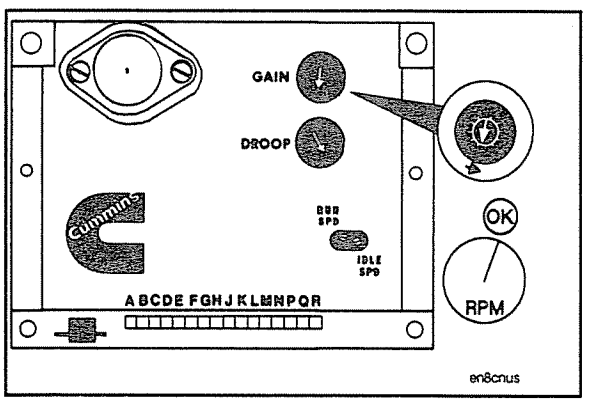

1. Slowly turn the potentiometer counterclockwise until a constant speed is achieved.

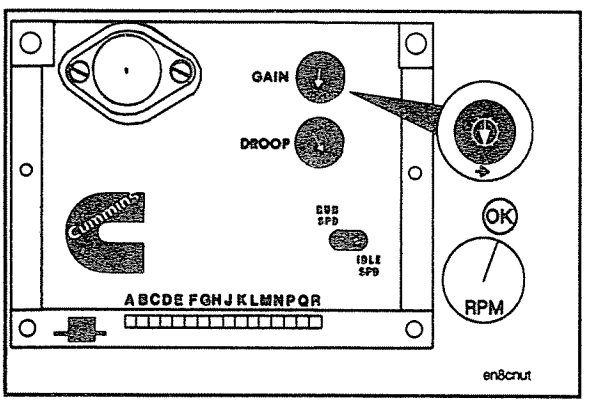

2. Turn the potentiometer counterclockwise an additional 1/2 division.

Droop Operation

Close the main line circuit breaker and apply the rated KW load.

Check the frequency meter to make sure the full load governed speed is correctly set at 60 Hz or 50 Hz.

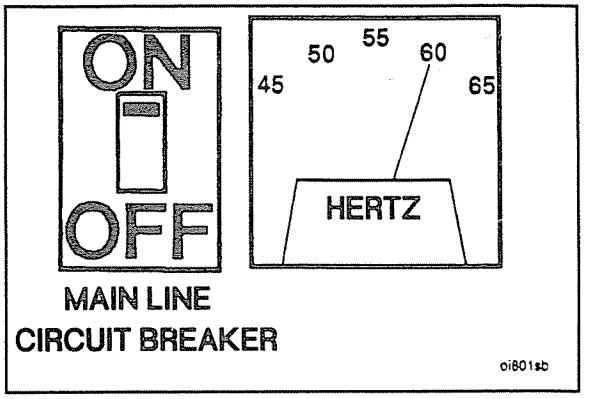

1. If the frequency meter is less than 60 Hz or 50 Hz, more droop is present than desired.
2. Turn the droop potentiometer counterclockwise slowly until it is 60 Hz or 50 Hz.

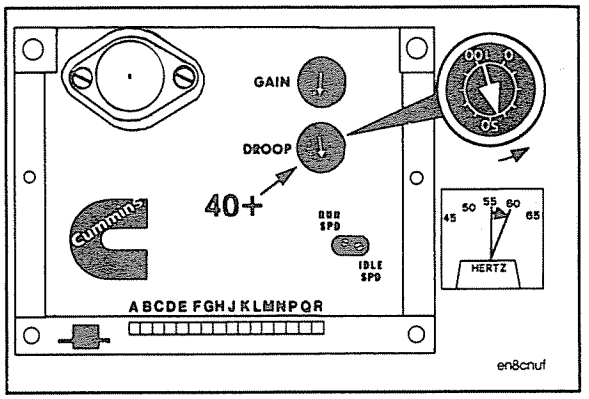

3. Open the main line circuit breaker and adjust the no load governed speed again to the correct setting.

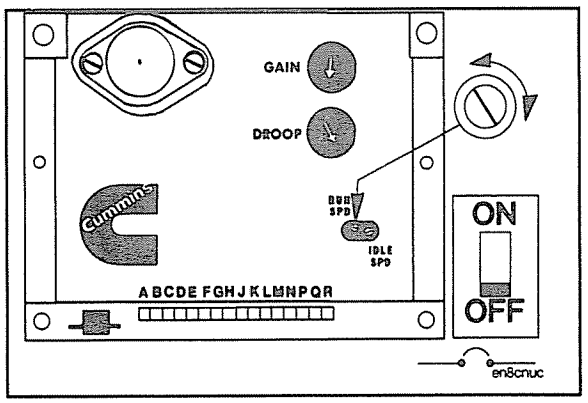

4. Close the main line circuit breaker and apply the load. The frequency meter must read 60 Hz or 50 Hz.
5. If the frequency meter is not 60 Hz or 50 Hz, repeat the procedure. It will usually take two or three successive adjustments to obtain the correct frequency.

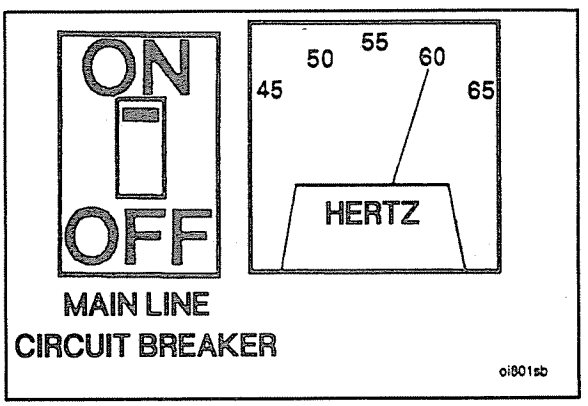

$$S_{al} = S_{nl} - \left[\left(\frac{\text{Available KW Load}}{\text{Rated KW}}\right) \times \left(S_{nl} - S_{fl}\right)\right]$$

Where
S_{al} = Speed at Available KW Load
S_{fl} = Speed at Full KW Load
S_{nl} = Speed at No Load

Example
Available KW Load = 400
Rated KW = 500
Speed at Full KW Load = 1800
Speed at No Load = 1854

$$S_{al} = 1854 - \left[\left(\frac{400}{500}\right) \times (1854 - 1800)\right]$$

S_{al} = 1811 RPM

6. To calculate the operating (governed) speed under the available load for droop operation, when the full KW load is not available, use this formula.

NOTE: The engine speed in RPM is equal to 30 times the frequency (Hz). At 60.0 Hz, the engine speed = 30 X 60 = 1800 RPM.

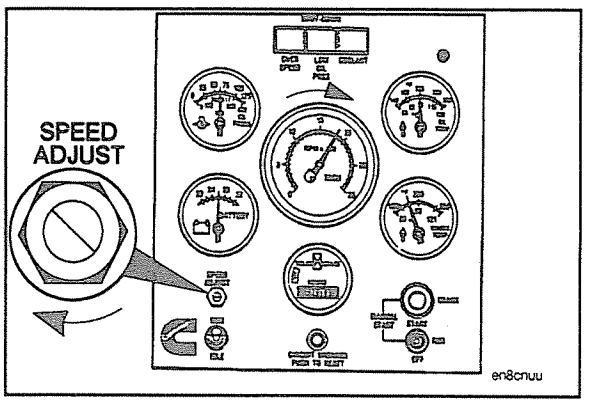

Fine Speed Adjustment

After the gain adjustment is made, the full load governed engine speed may require a minor adjustment to equal the desired speed (i.e. 60 Hz, 1800 RPM or 50 Hz, 1500 RPM). Use the SPEED ADJUST potentiometer on the engine instrument panel for fine speed adjustments of less than ±100 RPM.

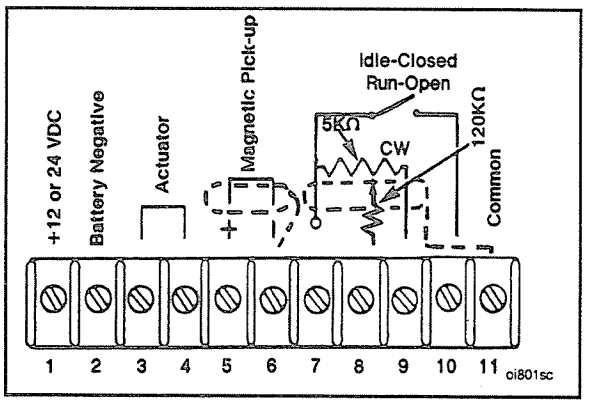

System Adjustment Remote Mounted Governor Control

Follow the panel mounted governor control instructions for setting the governed speed, idle, droop and gain on the remote mounted control. The wiring for the remote mounted control is shown.

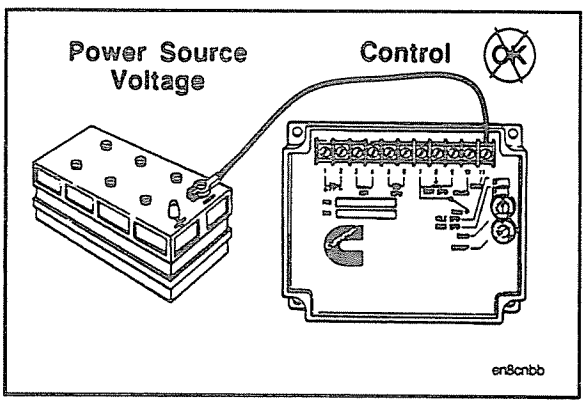

Caution: Do not attach the battery negative to Terminal Number 11. The control circuitry will be damaged.

NOTE: When a two bearing generator or a single bearing generator with a flexible drive between the flex discs and shaft (eg. Kohler 4T10 generators, Models 230 ROZ, 250 ROZ and 275 ROZ) is used, install a jumper between terminals A and B. This jumper provides additional stability in the governor control. The oscillation frequency of the coupling between the engine and the generator can cause the governor control to react to this oscillation in addition to a change in engine speed.

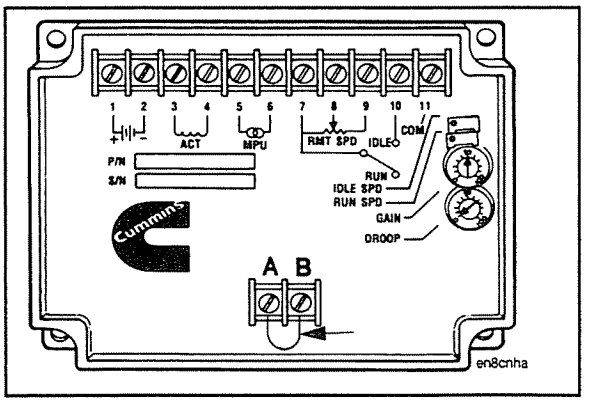

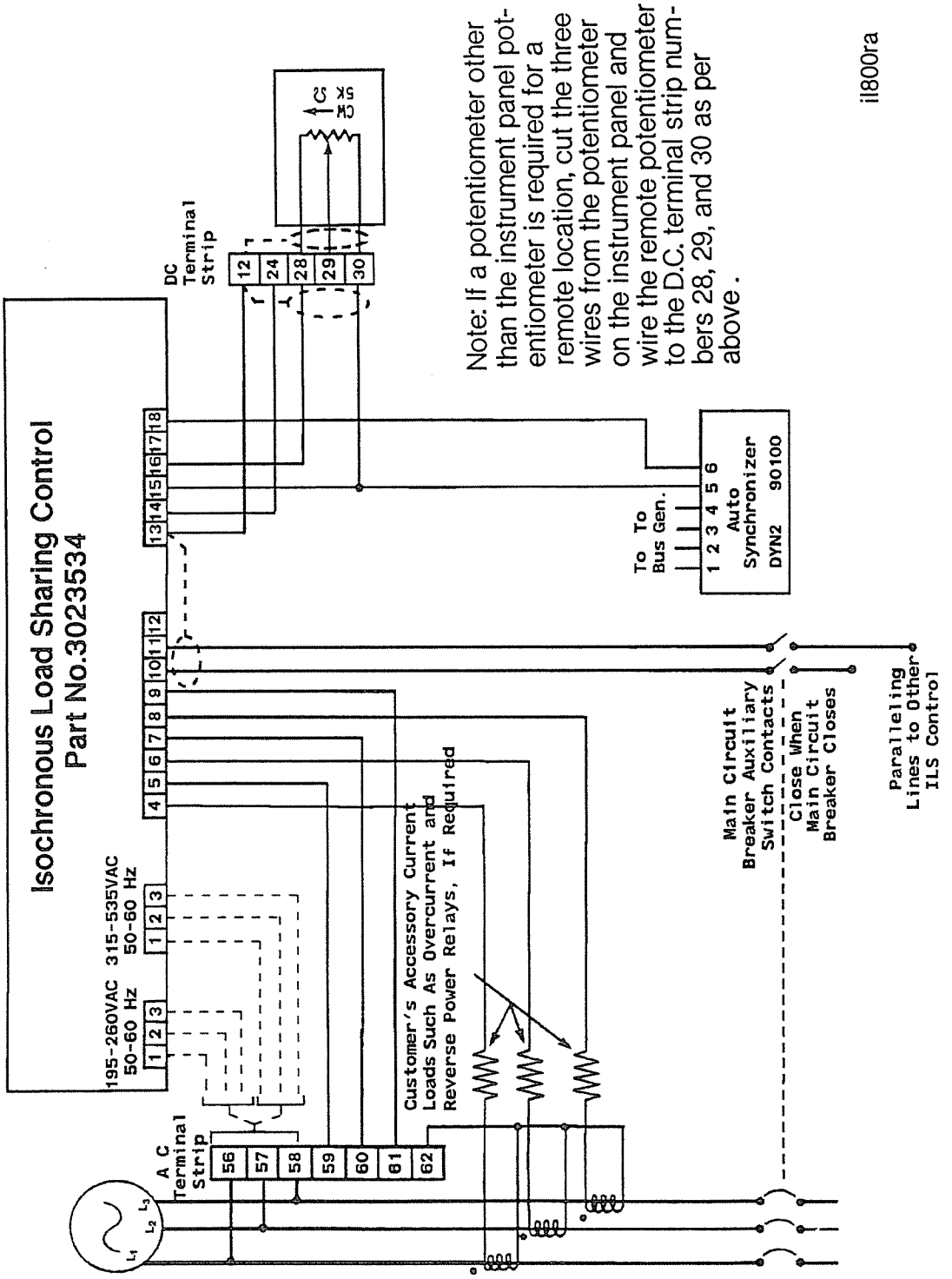

The load sharing control with a panel mounted plug in control and a remote speed adjusting potentiometer for use with an auto synchronizer and an isochronous load sharing control.

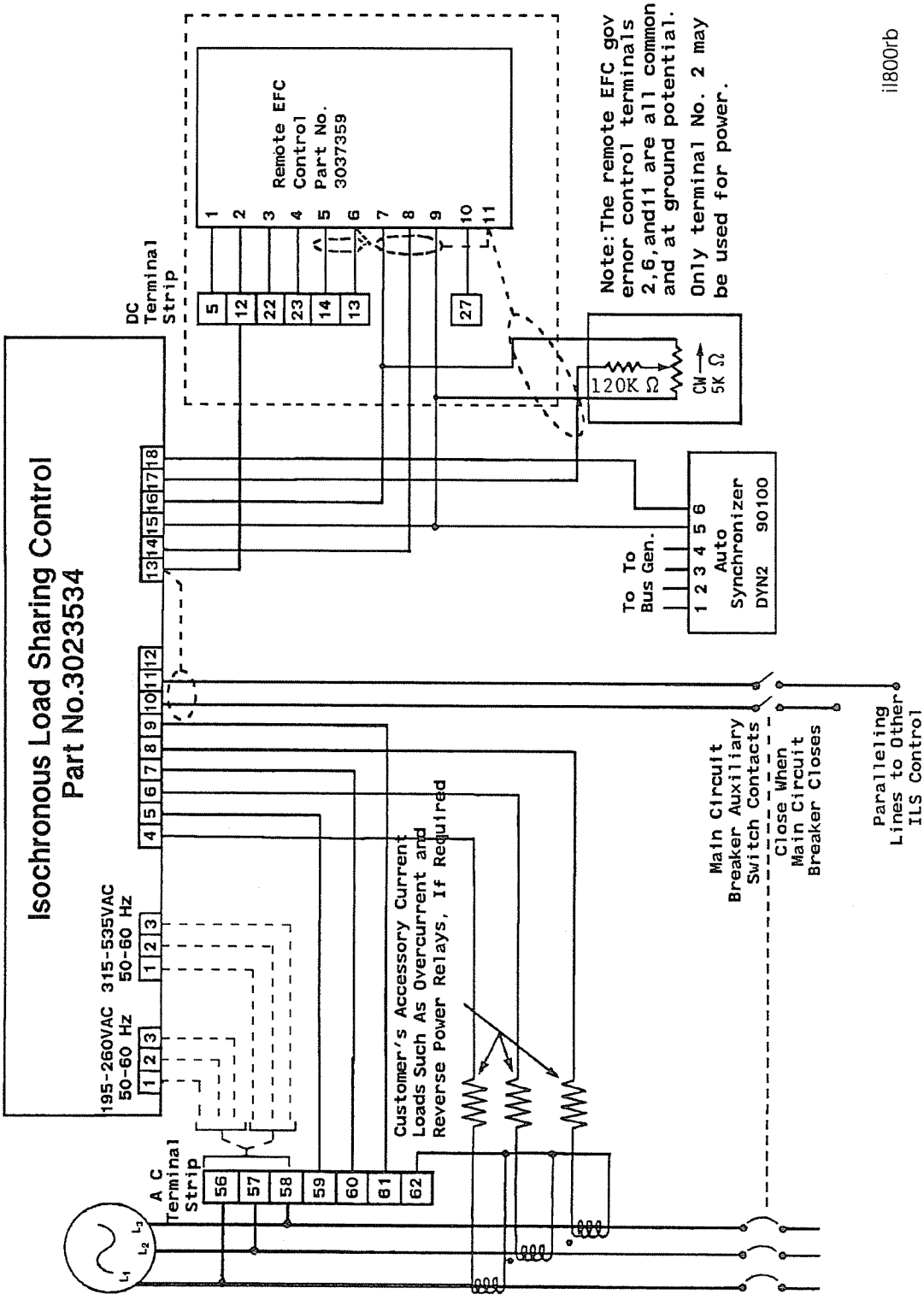

The load sharing control with a remote control and a remote speed adjusting potentiometer for use with an auto synchronizer and an isochronous load sharing control.

Wiring Of Generator Sets (Refer To The Diagram On The Next Page)

Caution: Measure the voltage of the panel mounted governor control on the printed circuit board terminal strip. Do not measure the voltage on the control terminal strip.

Notes For Auto-Synchronizer

1. The "Gain Range" is changed by adding a jumper between Terminals 6 and 14.

   No jumper 6 to 14: Auto-Synchronizer is set for fast responding engines.

   With jumper 6 to 14: Auto-Synchronizer is set for slow responding engines.

2.

   a. Closing a contact or jumpering 11 to 12 allows the Auto-Synchronizer to perform as a sync check relay only, with circuit breaker contact output but no control on the incoming generator.

   b. Closing a contact between 12 to 13 allows the Auto-Synchronizer to perform as a speed matching unit. The speed and phase of the incoming generator are controlled and contact is closed to drive circuit breaker. Once the circuit breaker is closed, the contact between 12 and 13 should be opened. (See the diagram for an example of how one would most likely wire Terminals 11, 12 and 13.)

   c. Open contacts or no jumper 11 to 12 or 12 to 13 allows the Auto-Synchronizer to still sense any error but it does not provide any control or contact closures.

3. Phasing of voltage potential to the Auto-Syncrhonizer is necessary to keep each signal in its correct phase relationship. If the generator voltage is not the same as the voltage rating of the Auto-Synchronier, step-down transformers are required. Correct phasing of the transformer leads is necessary. Step-down transformers require a nominal 10 VA/PHASE for the GEN. input to the Auto-Synchronizer and 7 VA/PHASE for the BUS input to the Auto-Synchronizer.

Notes For Isochronous Load Sharing

4. Systems battery supply. If more than one engine is started using the same battery supply, use separate battery supply for the DYNA System. Twist power leads as shown. Use shielded leads as shown. Use a single pole, single throw 4 ampere switch.
5. Select current transformers to provide as close as possible 5.0 amps at full-rated load. Current transformers require 12.5 VA/PHASE at 5.0 amps.
6. Observe current transformer polarity markings when connecting.
7. Phasing of voltage potential to the Isochronous Load Sharing Control is necessary to keep each signal in its correct phase relationship. Cummins supplied ILS panels are capable of input voltage ranges from 195 to 260 VAC or 315-535 VAC. If the generator voltage is not the same as the voltage rating of Isochronous Load Sharing Control, step-down transformers are required. Correct phasing of the transformer leads is necessary. Step-down transformers require a nominal 6 VA/PHASE for the Isochronous Load Sharing Control.
8. Droop/Isochronous switch is not required if units are always operated in the Isochronous mode.

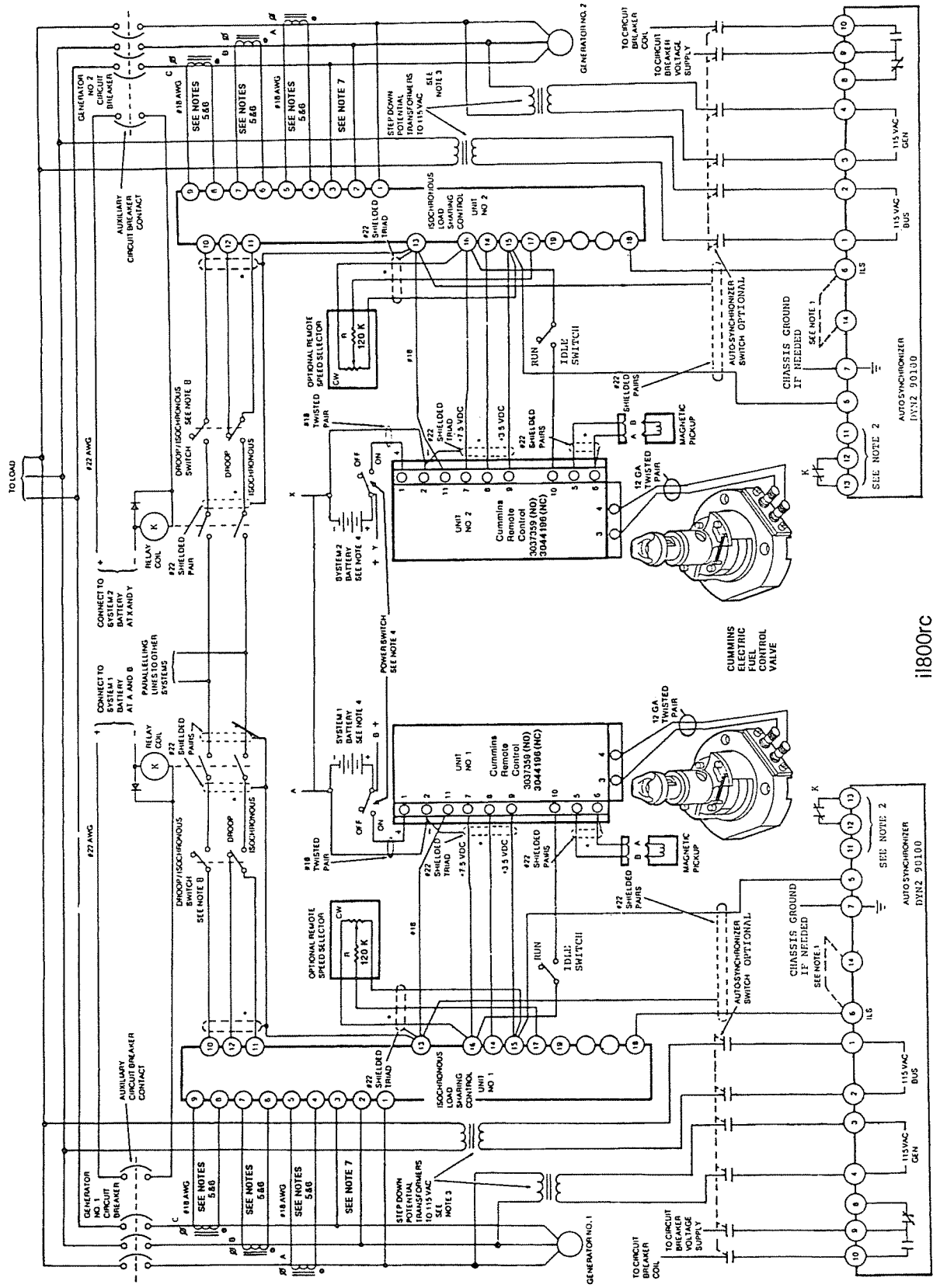

A typical wiring diagram for two generator sets with a load sharing control, governor control, EFC fuel control and auto-synchronizer.

Graphic Symbols

This table contains the symbols and their identification used in these drawings.

Name		Symbol
Battery		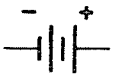
Alternator (Frequency Source)		
Resistor		
Variable Resistor (Potentiometer)	3 Terminal Device	
	2 Terminal Device	
Terminal Strip		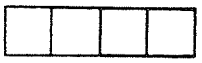
Switches: (N.O.) Normally Open		
(N.C.) Normally Closed		
Transfer		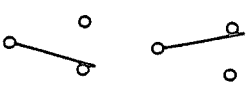
Transfer 3 Position		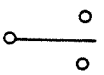
Relay Contact (N.O.)		
(N.C.)		

Name	Symbol
Transfer	
Capacitor	
Fuse	
Circuit Breaker	
Jumper Wire	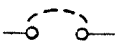
Coil	
Magnetic Core	
Transformer	
Variable Reluctance Magnetic Pickup	
Female Contact	
Male Contact	

Name	Symbol
Shields: Shielded Wire	
Shielded Pair	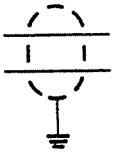
Crossing of Conductors (wires) not Connected	
Junction of Connected Conductors (wires)	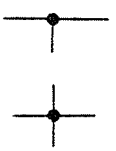
Ground Chassis or Frame Connection	
Conducting connection to a chassis or frame, or equivalent chassis connection of a printed wiring board. The chassis or frame (or equivalent chassis connection of a printed wiring board) may be at a different potential than the earth or structure in which this chassis or frame (or printed wiring board) is mounted.	

Name	Symbol
Direct Conducting Connection to Circuit Return	
Conducting connection to a structure that serves a function similar to that of an earth ground (that is, a structure such as a frame of an air, space, or land vehicle that is not conductively connected to earth).	
Earth Safety Ground	
** This symbol may be used in place of symbol for direct conducting connection to circuit return to indicate a ground connection having a specified protective function (e.g., for protection against electrical shock in case of a fault).	
* Electrical and Electronics Symbols and abbreviated name.	
** Ref. Electrical and Electronics Graphic Symbols and abbreviated name.	
*** ANSI/1EEEY32-E Reference clarification	

Glossary of Power Generator Terms*

A.C. — See Alternating Current.

Alternating Current — Electrical current which repeatedly varies from zero to a positive maximum value to zero to a negative maximum value and back to zero at a periodic rate. Since the applied voltage continually reverses polarity, the resultant current flow alternates in direction within the circuit.

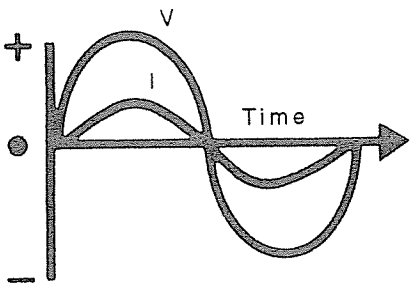

Alternating Current I
Applied Voltage V

AMP — An abbreviation for the term Ampere.

Ampere — The unit of measure of electrical current flow. One ampere of current will flow when one volt of electrical potential is applied across one ohm of resistance.

Auto-Transformer — A transformer of single coil construction in which both the primary and secondary connections are made on the same coil but at different taps.

B- — Symbol used to designate the negative polarity of a D.C. voltage supply.

B+ — Symbol used to designate the positive polarity of a D.C. voltage supply.

Capacitance — The property of a device which resists changes in voltage. In an A.C. circuit, a capacitive load will cause the voltage to lag behind the current flow. Stated more conventionally, the current leads the applied voltage. A capacitive load is therefore a leading power factor load (see Power Factor).

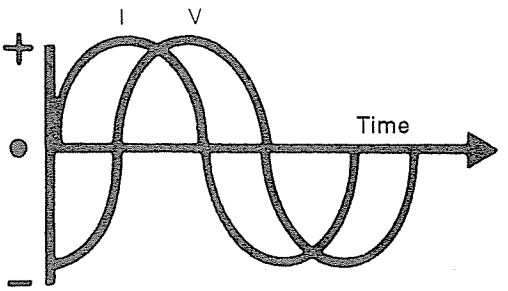

Alternating Current Leading Applied
Voltage Caused by Capacitive Load

Capacitor — A device possessing the property of capacitance. A typical capacitor consists of two conducting surfaces separated by an insulating material. A capacitor stores electrical energy, blocks trhe flow of D.C. and permits the flow of A.C. to a degree largely dependent on the capacitance and the frequency of the applied A.C.

Circuit — An electrical path through which an electric current may flow from a voltage supply to a load and return. A closed or complete circuit is one where current is flowing. An open circuit is one where the path has been disrupted, such as an open switch or circuit breaker, thus stopping current flow.

Circuit Breaker — A protective device for opening a circuit when current flow exceeds a predetermined value.

Circulating Current — Also called Cross Current. Current which flows between paralleled generators, most apparent with no external load on the paralleled generators. Circulating current is caused (1) by unequal excitation of the generators (reactive current, which may be reduced by changing the voltage regulator adjustment or connections); and (2) by unequal power from the engines that are driving the generators real current (and power) which can be eliminated by governor adjustments.

Conductor — A wire, cable, bus, or other device intended to distribute current from the supply to the load. Technically, a conductor is any device which will permit the flow of current.

Contactor — A device for opening and closing an electric circuit. Contactors are normally used in motor circuits where large amounts of current are controlled.

*Some of the terms defined and explained within this glossary apply particularly to current Cummins Generator Sets.

Cross Current — See Circulating Current.

Cross Current Compensation — A term, no longer approved, for a circuit arrangement that made paralleled generators share the reactive component of load current in proportion to the generator ratings. The circuit arrangement could also essentially eliminate the reactive component of circulating current flowing between paralleled generators. See Reactive Differential (Cross Current) Compensation And Reactive Droop Compensation.

Current--(Electrical, Symbol I) — The rate of transfer of electricity from one point to another. Current is usually a movement of electrons, but may also be a movement of positive ions, negative ions or holes. Current is usually measured in amperes.

Cycle — A complete set of events before repetition occurs. In alternating current or voltage, a cycle starts at zero, continues to a maximum positive value returns to zero, continues to a maximum negative value, and is completed at zero.

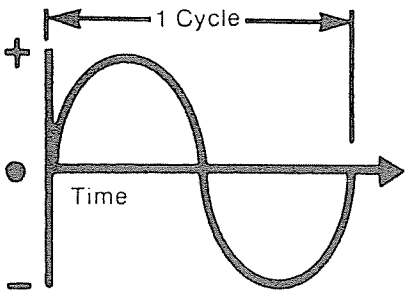

Typical Alternating Current
or Voltage Cycle

D.C. — See Direct Current.

Diode — A two terminal solid-state device which permits current to flow in one direction, but not in the other. In alternating current circuits, a diode will permit one half cycle to flow but will resist the flow of the opposite half cycle of current. Thus, alternating current is converted to direct current by a diode.

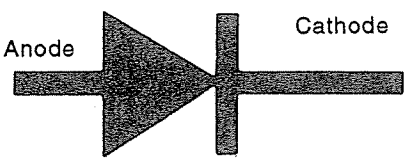

Diode

Direct Current--(Abbreviated dc) — An electric current that flows in one direction only. Conventional direct current is defined as flowing from positive to negative in the circuit outside the source (example: a battery or combination of diodes). Conventional current flows in the direction of the arrow through a diode. Electron flow and U.S. Navy designated current flow in the opposite direction.

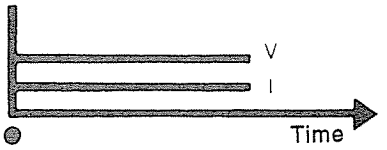

Direct Current I
Applied Voltage V

Distribution Panel — A control panel containing circuit breakers, transfer switches, and other control devices which distribute the electrical power, such as from a generator set to the various loads.

Double Pole Switch — A switch which has two sets of contacts which operate on two independent circuits at the same time.

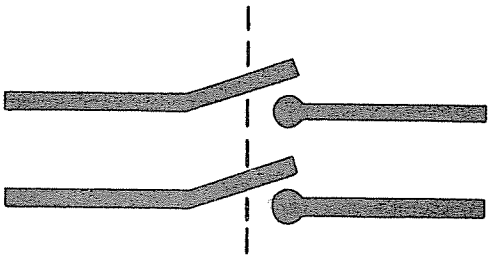

Typical Double Pole Switch Shown as a
Single Throw Type in the Off Position

Double Throw Switch — A switch which has a common pole that is closed to one contact and open to a second contact in one switch position. With switch operation, the first contact opens and the second contact closes to the common pole.

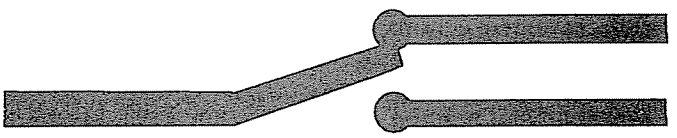

Typical Double Throw Switch Shown as a
Single Pole Type

E — Symbol used to represent electrical potential (voltage).

Earth Ground — An intentional connection made between the earth and the metallic frame of electrical equipment as a means to eliminate possible voltage hazards to personnel. Earth Ground also serves, in some cases, to reduce electrical interference in sensitive circuits such as television and radio equipment.

EFC Governor, Electric Fuel Control Governor — An isochronous (same speed no load and full load) or speed droop governor that consists of a magnetic pickup, a governor control, and an actuator. The actuator may be normally closed or normally open. The actuator is mounted within the fuel pump housing.

EMI — An abbreviation for the term electro-magnetic interference which is sometimes caused by SCR type devices and evident in radio and television operation.

Energy — The capability of performing work.

Frequency — The number of complete cycles of alternating current per unit of time. Typically, frequency is expressed in cycles as per second or Hertz (HZ).

Frequency Droop — A decrease in steady-state frequency output of a generator caused by an increase in load. This decrease in frequency from the no load frequency is expressed as a percentage of the full load frequency or:

$$\text{Percent Frequency Droop} = \frac{(\text{No Load Frequency} - \text{Full Load Frequency}) \times 100}{\text{Full Load Frequency}}$$

A three percent frequency droop may be used to provide governor stability and for load sharing between paralleled generator sets.

Frequency Meter — An instrument designed to measure the frequency of an alternating current system.

Gain — The increase in signal power that is produced by an amplifier, usually given as the ratio of output to input voltage, current or power. In generator set systems, a low gain setting on the electric governor or voltage regulator provides a relatively small signal to correct variations of frequency or voltage. The frequency and/or voltage may wander or be slow in recovering to stable conditions after a load change. A high gain setting provides a relatively large signal to correct variations of frequency and/or voltage. If the gain is set too high, the electric governor or voltage regulator may over-correct. This may produce unacceptable hunting of the frequency and/or voltage.

Gate — The third terminal of an SCR to which a voltage must be applied before the SCR will conduct.

Governor — A device which controls engine speed and thus the generator output frequency.

Ground — A connection, either accidental or intentional, between an electrical potential and the earth or some conducting body serving in place of the earth.

Heat Sink — A device which absorbs heat from electrical devices such as diodes and SCR's and dissipates the heat to the surrounding air.

Hertz — A term equivalent to cycles per second (See Frequency).

Hunting — Oscillation in frequency or in voltage where steady-state conditions are not reached, particularly after a load transient change.

I — Symbol used to represent current.

Impedance — The opposition to the flow of alternating current.

Induced Voltage — The voltage which is produced by relative motion between a wire and a magnetic field.

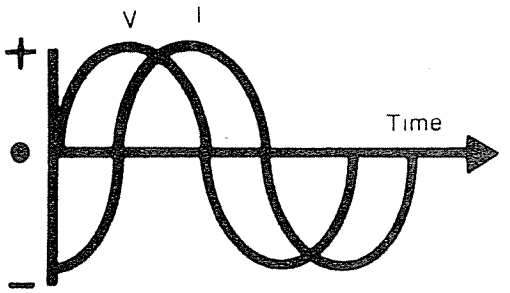

Alternating Current Lagging Applied Voltage Caused by Inductive Load

Inductance — The property of a device which resists changes in current. In an A.C. circuit, an inductive load will cause the current lag behind the applied voltage. Stated more conventionally, the current lags the applied voltage. An inductive load is therefore a lagging power factor load. See Power Factor.

Inductor — A device possessing the property of inductance. An inductor stores electrical energy, passes DC, and opposes the flow of AC to a degree largely dependent on the inductance and the frequency of the applied AC. A typical inductor consists of a coil of wire.

In Phase — Alternating currents or voltages are in phase with respect to each other if they cross through zero and reach their positive and negative maximum values together.

Insulation — A non-conductive material such as rubber or plastic intended to prevent current from flowing. Technically, insulation is any material which stops the flow of current.

Isochronous — As it applies to engine governors, maintaining constant steady-state speed regardless of the load within the rating of the engine. Thus, a generator set is said to be isochronous if the frequency remains the same regardless of load.

Normally Closed--(Symbol N.C.) — As applied to a magnetically operated device such as a valve or the contacts of a relay, Normally Closed indicates that the valve or the relay contacts are closed when no power is supplied to the operating magnet.

Normally Open--(Symbol N.O.) — As applied to a magnetically operated device such as a valve or the contacts of a relay, Normally Open indicates that the valve or the relay contacts are open when no power is supplied to the operating magnet.

Ohm — The unit of measure of electrical resistance. One ohm of resistance will allow a current of one ampere to flow with an applied potential of one volt.

Ohmmeter — An instrument for measuring electricial resistance.

Ohm's Law — A fundamental law expressing the relationship between voltage, current and resistance in electrical circuits. The law states that E = IR or voltage is equal to current times resistance.

Open Circuit — 1) A circuit that does not provide a complete path for the flow of current.2) A condition of an electrical circuit caused by the breaking of continuity of one or more conductors of the circuit; often an undesired condition. 3) An arrangement of conductors and equipment that depends upon lack of continuity for operation, as open-circuit telegraphy; a circuit in which continuity is incomplete or interrupted.

Oscillogram — The permanent record produced by an oscillograph, or a photograph of the trace produced by an oscilloscope.

Oscillograph — A measurement device for determining waveform by recording the instantaneous values of a quantity such as voltage as a function of time.

Oscilloscope — An instrument primarily for making visible the instantaneous value of one or more rapidly varying electrical quantities as a function of time or of another electrical or mechanical quantity.

Oscilloscope, Dual Beam — An oscilloscope in which the cathode-ray tube produces two separate electron beams that may be individually or jointly controlled.

Parallel Connection — An electrical connection in which the input of one element is connected to the input of another element. The output connections are similarly connected together thus providing two or more paths for current to flow.

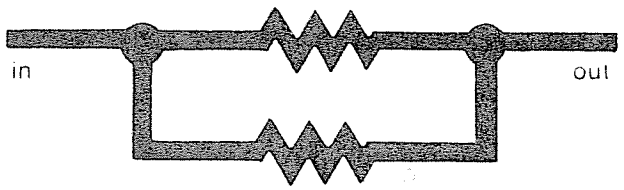

Parallel Connection

Parallel Operation — The method by which two or more generators having the same voltage and frequency characteristics are connected to a common load.

Permanent Magnet Generator — A generator which uses permanent magnets to create a magnetic field. As applied to Cummins Generators; a permanent magnet generator, within the main generator, supplies the power to the voltage regulator which in turn supplies power to the exciter field. The permanent magnet generator still supplies power during a short circuit of the main generator. This permits the main generator to sustain high short circuit currents. The output of the permanent magnet generator is electrically isolated from the main generator output and is not adversely affected by main generator output waveform distortion such as from SCR type loads.

PMG — See Permanent Magnet Generator.

Polarity — An electrical term which indicates the direction in which current flows in a conductor. In a direct current system, current flows in the same direction. In an alternating current system, current changes direction as the polarity of the A.C. voltage source changes.

Potential — Another term to indicate voltage.

Potential Difference — The difference in voltage between two points in a circuit.

Power — Defined as the rate of performing work. Mechanical power is measured in horsepower or kilowatts. Electrical power is measured in kilowatts.

Power Factor — The ratio of the true power (KW) requirements of a load to the apparent power (KVA) requirement of a load. The combined loads applied to a power source may have a resistive, capacitive, or inductive effect.

Resistive loads such as incandescent lighting or resistive heating elements cause no shift in the voltage/currentwaveforms and are therefore unity (1.0) power factor loads.

Inductive and capacitive loads, however, cause the voltage and current waveforms to shift with respect to one another. These types of loads are commonly called power factor loads (i.e., the power factor is less than 1.0).

See INDUCTANCE and CAPACITANCE for more information.

Power factor is ferquently multiplied by 100 and expressed as a percentage.

The formula for power factor is:

$$\text{Power Factor} = \frac{\text{True Power (KW)}}{\text{Apparent Power (KVA)}}$$

R — Symbol used to represent resistance.

Reactive Differential (Cross Current) Compensation — A circuit arrangement for operating generators in parallel with no generator voltage droop. Reactive Differential Compensation is accomplished by a differential interconnection of the secondaries of the generator current transformers used for Reactive Droop Compensation. This arrangement is not often used and is very difficult to set up when paralleling generators of different capacities.

Reactive Droop Compensation — A circuit arrangement that creates a droop in generator output voltage that is proportional to the reactive load current. This circuit arrangement makes paralleled generators share the reactive component of the load current in proportion to the generator ratings. It also can essentially eliminate the reactive component of circulating current which may flow between paralleled generators. The Reactive Droop Compensation arrangement is commonly called the Generator Paralleling Module.

Relay — An electro-mechanical device having a magnetic coil which, when energized, opens or closes several sets of contacts.

Resistance — Opposition to the flow of current.

Resistor--(Symbol R) — A device or component designed to have a definite amount of resistance. Resistors are used in circuits to limit current flow or to provide a voltage drop.

Resistor, Fixed — A component which is used to control voltage and current by introducing a constant resistance of known value into the circuit.

Resistor, Variable — Similar to a fixed resistor except the resistance value can be adjusted. The voltage adjust rheostat is a variable resistor.

Rheostat — A variable resistor.

Series Connection — An electrical connection in which the input of one element is connected to the output of another element providing only one path for current to flow.

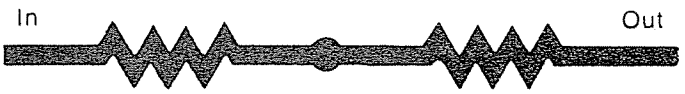

Series Connection

Short Circuit — An abnormal connection (including an arc) of relatively low resistance, whether made accidentally or intentionally, between two points of different potential in a circuit. Equipment, not protected by fuses or circuit breakers, may be damaged by a short circuit.

Shunt Trip — An electro-mechanical device which, when energized, trips the main line circuit breaker.

Single Pole Switch — A switch which has only one set of contacts.



Typical Single Pole Switch Shown as a Single Throw Type in the On Position

Single Throw Switch - A switch which opens a set of contacts in one switch position and closes the contacts in the other position.



Typical Single Throw Switch Shown as a Single Pole Type in the Off Position

Speed Droop — A decrease in steady-state speed of an engine due to an increase in applied load. This decrease in speed from the no load speed is expressed as a percentage of full load speed or:

$$\text{Percent Speed Droop} = \frac{(\text{No Load Speed} - \text{Full Load Speed}) \times 100}{\text{Full Load Speed}}$$

Solenoid — An electro-mechanical device which, when energized, acts on a movable core or plunger in the center of the energizing coil to perform mechanical work.

Solid-State — A term which applies to electronic devices which are constructed using semiconductor material. Such devices include transistors, SCR's, and diodes.

Stability — Freedom from undesired variations or oscillation. In generator set systems, the generator set is stable if it can maintain or quickly re-establish steady state conditions of voltage and frequency after a sudden load change.

Surge Suppressor — A device capable of conducting current in either direction in the presence of high transient voltages thus protecting devices that could otherwise be damaged.

Synchronism — The condition where two or more generators are operating at the same frequency and output voltage and are in phase with one another.

Synchronizing — The procedure of matching the frequency, phase rotation, voltage and phase relationship of one generator to another for purposes of paralleling the units onto a common bus.

Synchronous — A generator whose output frequency is directly related (proportional) to the speed of the engine driving the generator.

Tachometer — An instrument for measuring the rate of rotation expressed in revolutions per minute.

Temperature Drift — A change in the value of a component caused by changes in operating temperature.

Terminal — A mechanical device for making electrical connections.

Transformer — Frequently, a device using a laminated iron core with a primary and secondary winding. A transformer changes some level of input (primary) voltage or current to a proportional output (secondary) voltage or current. See current transformer and potential transformer.

Transient — A temporary change from the steady-state conditions.

V — Symbol used to represent voltage.

Volt — The unit of measure of electrical potential (voltage). One volt of electrical potential will force a current of one ampere to flow through a resistance of one ohm.

Voltage — Electrical potential or pressure which forces current to flow through a circuit.

Voltage Dip — A temporary reduction in voltage generally resulting from an increase in load.

Voltage Droop — A decrease in steady-state voltage of a generator due to an increase in load applied. This decrease in voltage from the no load voltage is expressed as a percentage of the full load voltage or:

$$\text{Percentage Voltage Droop} = \frac{\text{(No Load Voltage - Full Load Voltage) x 100}}{\text{Full Load Voltage}}$$

Voltage Droop Compensation — A system which permits paralleled generators to share the currents of a load in proportion to the generator set ratings.

Voltage Regulator — A device which controls the voltage output of a generator at a preset value regardless of the amount of load applied.

Voltmeter — An instrument designed to measure electrical potential or voltage.

Component Specifications

Actuator and Governor Control

Operation

Governing Mode	: Isochronous to 5% droop
Steady State Stability	: ±1/4%
Operating Input Frequency Range	: 1K to 5K Hz
Idle Frequency Range	: 200 to 2200 Hz
Response Time of Actuator	: 15 milliseconds

Power

Operating Voltage	: 12 Volts D.C. ±3 Volts or 24 Volts D.C. ±6 Volts Continuous
Ground Polarity	: Negative ground (case isolated)
Power Consumption (Maximum)	: 94 Watts (12 or 24 Volts D.C.)
Nominal Operating Current	: 1.3 amps at 24 volts
Nominal Operating Current	: 2.6 amps at 12 volts
Maximum Operating Current	: 3.9 amps at 24 volts
Maximum Operating Current	: 7.8 amps at 12 volts

Environmental

Ambient Operating Temp.	: -40° to 185°F [-40° to 85°C]
Maximum Temp. Drift	: ±1@ - 40° to 185°F [- 40° to 85°C]
Relative Humidity	: 0 to 100% non Condensing

Physical-Remote Control

Dimensions	: 5.75 in. x 4.44 in. x 2.15 in. (146mm x 113mm x 55mm)
Weight	: 2 lbs. [.9 kg]
Mounting	: Any position, typically in enclosure
Case Material	: Die cast aluminum

Panel Mounted Control

Dimensions	: 5.5 in. x 4.1 in. x 1.3 in. (140mm x 104mm x 33mm)
Weight	: 1 lb. [.45 kg]
Mounting	: 16 pin plug-in receptacle

Protection Features

High voltage protection (15 VDC for 12 volts or 32 VDC for 24 volts continuous)
Reverse of supply polarity
Surge protection (80 VDC, 10 msec transient)

Vibration Protection: (Remote Control) Entire printed circuit board sealed with Silicone filled Epoxy.

(Panel Mounted Control) Circuit board sealed with Silicone Epoxy.

Magnetic Pickup Specifications

Thread Size	: 5/8 - 18 UNF-2A
Tap Drill Size	: 37/64 inch
Proximity to Gear Teeth	: .028 in. min. - .042 in. max. (Approximately 1/2 to 3/4 turn)
Temperature Range	: - 67° to 220°F [- 55° to 105°C]
Output at Cranking Speed	: 1.5 volts AC minimum
Maximum Output	: 30 volts AC
Coil Resistance	: 300 ohms maximum

Remote Potentiometer Specifications

Resistance	: 5K Ohms ±5%
Linearity	: .25%
Travel	: 360° x 10
Power Rating	: 2 Watts @ 160°F [70°C]
Insulation Rating	: 1000 M Ohms @ 500 VDC
Dielectric Strength	: 100 V RMS
Operating Temperature Range	: +220°F to - 67°F [+105°C to - 55°C]

Wiper Resistor — For the Remote Mounted Control Fine Speed Adjustment Potentiometer

120K Ohms, 1/4 Watt

100 PPM Temperature Coefficient or Less Metal Film

Resistance Test of Actuator Coil

When the actuator leads are disconnected, the coil resistance must be 6.8 to 7.6 ohms for the 24 volt model or 2.0 to 2.3 ohms for the 12 volt model.

Table 1: Normally Open Electric Fuel Control Governor Parts

Part No.	Description
3052504	Actuator Low Flow-24V-For use on NT-855 and KTA-19 (KTA-1150) engines
3052505	Actuator High Flow-24V-For use on VTA-28 (VTA-1710), KTA-38 (KT(A)-2300) and KTA-50 (KTA-3067) engines
3052506	Actuator Ultra High Flow-24V-For use on KTTA-38 (KTTA-2300) and KTTA-50 (KTTA-3067) engines
3052507	Actuator Low Flow-12V-For use on NT-855 and KTA-19 (KTA-1150) engines
3052508	Actuator High Flow-12V-For use on VTA-28 (VTA-1710), KTA-38 (KT(A)-2300) and KTA-50 (KTA-3067)
3052509	Actuator Ultra High Flow-12V-For use on KTTA-38 (KTTA-2300) and KTTA-50 (KTTA-3067) engines
3037359	Control-12 or 24V (For Remote Mounting, Enclosed)
3032733	Control-12 or 24V (Plug-In type, for mounting in Cummins Engine Instrument Panel or Generator Control Panel Enclosure)

Table 2: Normally Closed Electric Fuel Control Governor Parts

Part No.	Description
3044189	Actuator, 24V, Normally Closed, Low Flow, for use on NT-855 and KTA-19 engines
3044190	Actuator, 24V, Normally Closed, High Flow, for use on VTA-28, KT(A)38, and KTA-50
3044191	Actuator, 24V, Normally Closed, Ultra-Hi Flow, for use on KTTA-38 and KTTA-50
3044192	Actuator, 12V, Normally Closed, Low Flow, for use on NT-855 and KTA-19 engines
3044193	Actuator, 12V, Normally Closed, High Flow, for use on VTA-28, KT(A)-38, and KTA-50
3044194	Actuator, 12V, Normally Closed, Ultra-Hi Flow, for use on KTTA-38 and KTTA-50
3044195	Control-12 or 24V, Plug-In-Type, for mounting in Cummins Engine Panel or Generator Control Panel Enclosure
3044196	Control-12 or 24V, Remote Mounting, Enclosed

Table 3: Parts Common for Both Systems

Part No.	Description
3034572	Magnetic Pickup (For SAE #1 or #0 Flywheel Hsg. with engine wiring)
3034573	Magnetic Pickup (For SAE #00 Flywheel Hsg. with engine wiring)
3015105	Remote Speed Potentiometer (See Remote Control)
104215	Idle-Run Toggle Switch
213272	Magnetic Pickup (For SAE #1 or #0 Flywheel Hsg. without engine wiring)
3003916	Magnetic Pickup (For SAE #00 Flywheel Hsg. without engine wiring)
213273	Wiring Harness for 213272 and 3003916 magnetic pickups

Table 4: Actuator Mounting Parts for an AFC Housing

Part No.	Description
193734	O-ring, Plug
145504	O-ring, Actuator
145505	O-ring, Actuator
3029854	Gasket
3029853	Spring, Return (Qty. 2)
3029300	Plug, O-ring
3017051	Capscrews, 1 1/4 inch (Qty. 3)

Table 5: Actuator Mounting Parts for an EFC Housing

Part No.	Description
3008248	O-ring, Shaft (Qty. 2)
3029853	Spring, Return (Qty. 2)
3048182	O-ring, Flange
3017051	Capscrews, 1 1/4 inch (Qty. 3)

Troubleshooting the EFC Governor

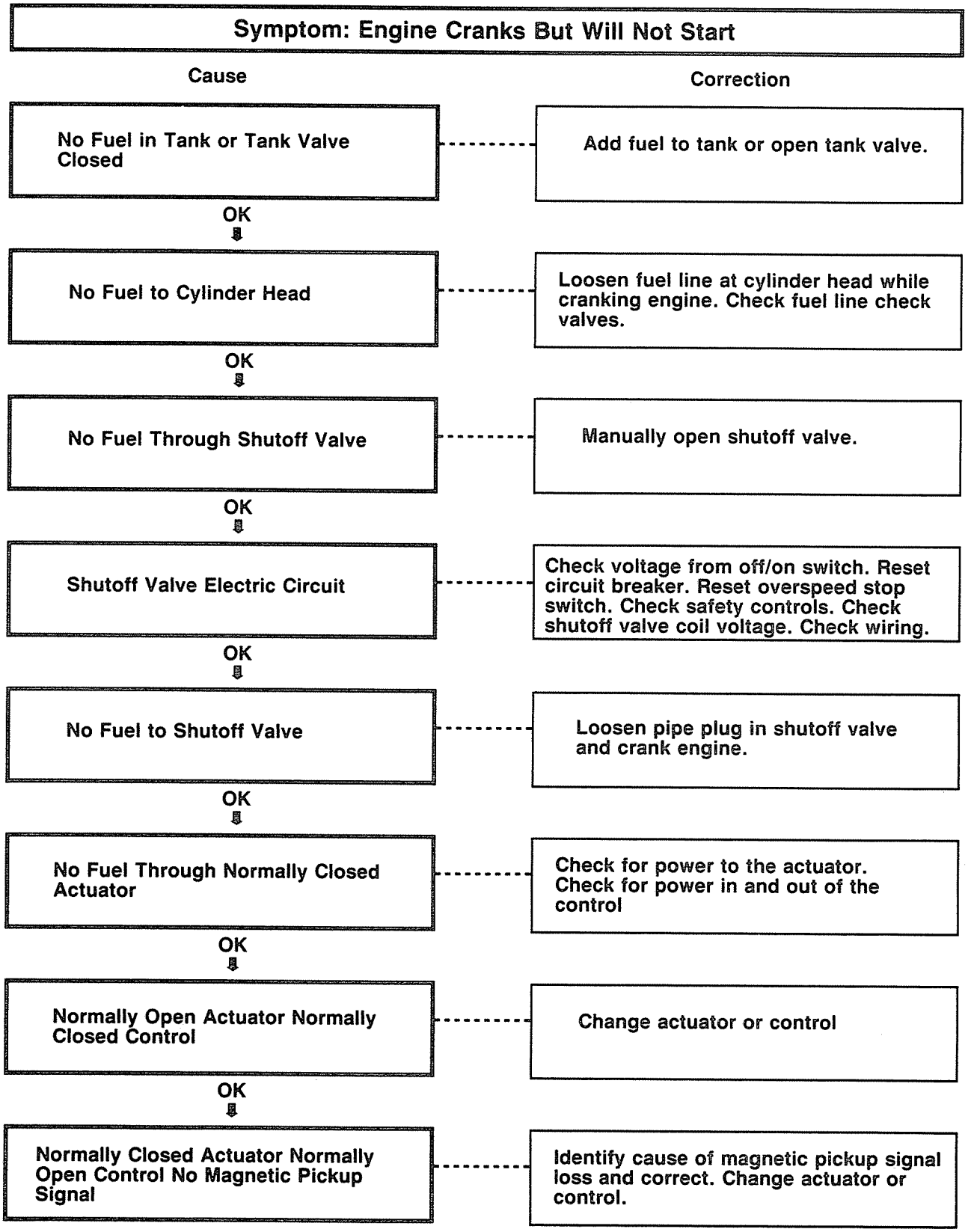

Troubleshooting the EFC Governor

Symptom: Engine Has Rough Performance Or Surge

Cause	Correction
Air in Fuel	Install sight glass and check for air in fuel.
OK ⇩	
Control Adjusted Incorrectly	Follow adjustment procedure. Reduce gain.
OK ⇩	
Actuator Sticking	Loosen all three capscrews and tighten again per procedure.
OK ⇩	
Actuator Return Springs Broken or Missing	Remove actuator and install new springs.
OK ⇩	
Actuator O-rings Defective	Remove Actuator and Replace O-rings.
OK ⇩	
Actuator (Normally Open)	Remove EFC control leads to actuator. Connect battery to actuator. Start engine. If engine operates at high idle, replace actuator.
OK ⇩	
Actuator (Normally Closed) Defective	Remove EFC control leads to actuator. Connect battery to actuator. Start engine. If engine operates at low idle, replace actuator.
OK ⇩	
Fuel Pump Housing Defective	Replace fuel pump housing.

Troubleshooting the EFC Governor

Symptom: Engine Has Rough Performance Or Surge (Continued)

Cause	Correction
System Voltage Below 19V for 24V System or 9.5V for 12V System	Charge batteries.
OK ⇩	
Battery Charger Not Connected Direct to Batteries	Connect battery charger directly to battery terminals.

Troubleshooting the EFC Governor

Symptom: Engine Operates At High Idle — Normally Open Actuator

Cause	Correction
Voltage Above 8V at Actuator on 12 Volt System or 16 Volts on 24 Volt System	Repair fuel pump. Replace actuator
OK ⇩	
Voltage Above 8V at Control Outlet to Actuator on 12V System or 16V on 24V System	Check wiring and connections.
OK ⇩	
Voltage Not Available at EFC Control	Check wiring and connections. Check battery voltage.
OK ⇩	
AFC No Air Needle Valve Loose or Not Installed	Tighten valve or replace AFC no air plug with needle valve.
OK ⇩	
Magnetic Pickup Voltage Below 1.5 VAC when Operating Engine	Check terminals 13 and 14 on the printed circuit board inside the engine mounted instrument panel or terminals 5 and 6 on the remote mounted control for magnetic pickup voltage.
OK ⇩	
EFC Control Failure	Replace EFC control.
OK ⇩	
Incorrect Normally Closed Control Installed and No Magnetic Pickup Signal	Identify cause of loss of magnetic pickup signal and correct. Install normally open control.

Troubleshooting the EFC Governor

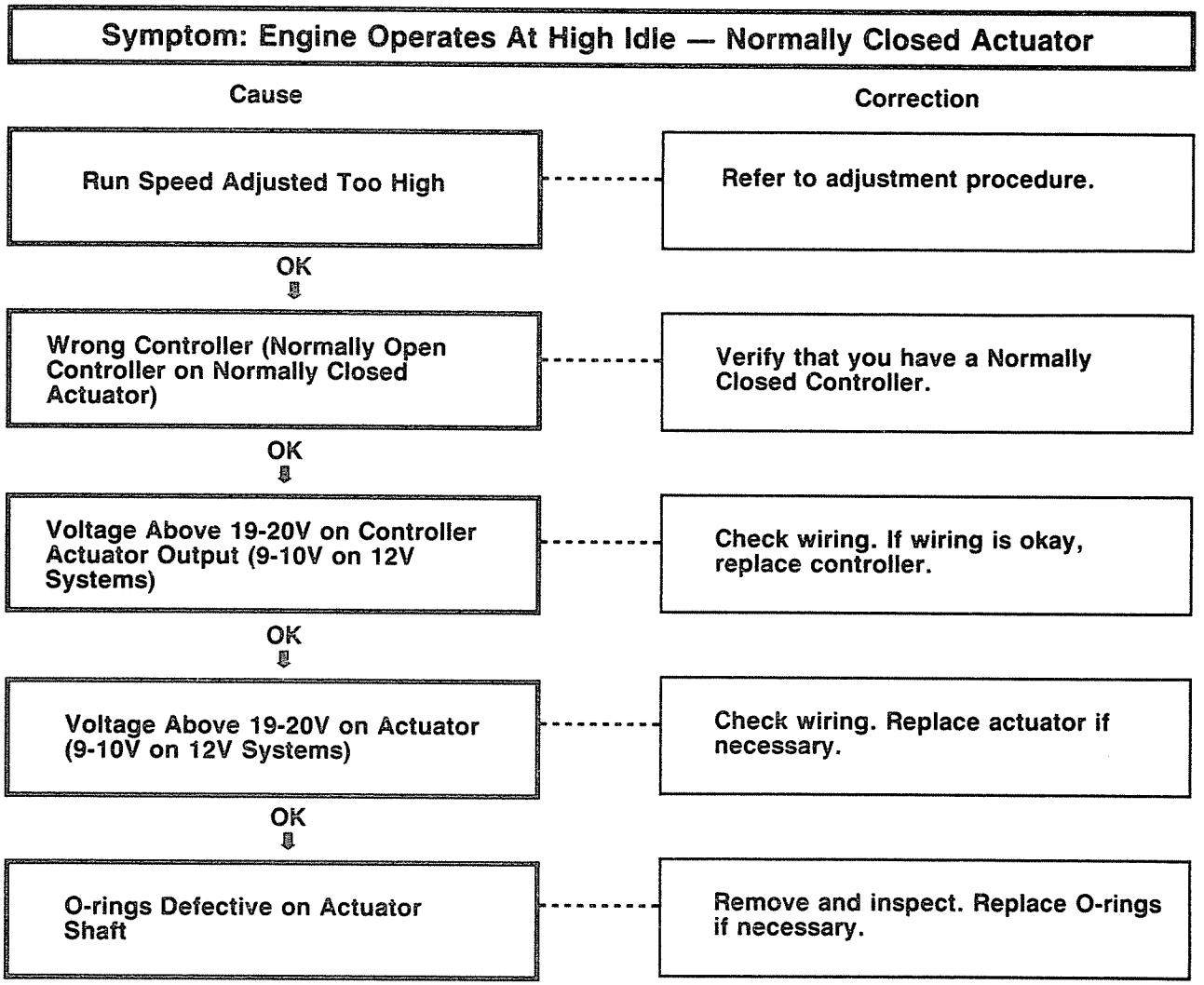

Troubleshooting the EFC Governor

Symptom: Engine Has Low Power — Normally Open Actuator

Cause	Correction
Engine Fuel Pressure Below the Specifications	Adjust to the specification. Check the fuel pump calibration.
OK ⇩	
Fuel Restriction Between Fuel Pump and Cylinder Head	Correct the restriction.
OK ⇩	
Injector Flow Not Adjusted Correctly	Check the injector flow.

Symptom: Engine Has Low Power — Normally Closed Actuator

Cause	Correction
Control Output Below 19-20V (9-10V on 12V Systems)	Replace Controller
OK ⇩	
Fuel Pump Calibration Not Correct	Remove and calibrate fuel pump
OK ⇩	
Fuel System Problem	Refer to fuel system manual.

Troubleshooting the EFC Governor

Symptom: Engine Operates Below Idle Speed	
Cause	**Correction**
Idle or Run Potentiometer Not Adjusted Correctly	Check the adjustment procedure.

Cummins Service Publications

The following Cummins Service Publications concerning the Cummins PT Fuel System can be purchased from any Cummins Distributor or Cummins Dealer.

Many publications have been translated into other languages. Cummins Distributors or Cummins Dealers have information on which publications are available in languages other than English.

For information about any Cummins publications, contact your local Cummins Distributor or Dealer.

Fuel Pump Calibration Information		
Bulletin Number		**Publication Description**
3379352		Codes 3600 and up - from Jan., 1981 to July of Year Printed
3379182		Codes 3200 to 3599 - from Jan., 1976 to Dec., 1980
3379068		Codes 3100 to 3199 - from Jan., 1970 to Dec., 1975
3379077		Codes issued between Oct., 1963 and Dec., 1969
983533		Codes issued before Oct., 1963 - No Flowmeter Method
3379101		PT (type R) Fuel Pump Calibration Manual
3379084		Fuel Pump Rebuild and Calibration Procedures
Injector Manuals		
3379071		Injector Rebuild Manual
3379664		Injector Parts, Flow and Cross Reference
Fuel System Wall Charts		
Full Size	Training Charts	
3379081	3379291	PT (type G) AFC Fuel Pump Cross Section and Flow
3379082	3379292	PT (type G) AFC - VS Fuel Pump Cross Section and Flow
3379080	3379237	PT 9 (type D) Top Stop Injector Fuel Injection Cycle
3379103	3379290	PT (type G) Fuel System Flow Diagram - All Injectors
3379131	3379293	PT (type G) Non AFC Fuel Pump Cross Section and Flow
3379485	3379295	PT (type G) AFC Fuel Pump Parts - July, 1979
3379172	3379294	PT (type H) AFC Fuel Pump Cross Section and Flow
983651		PT (type D) Injector In Line and Vee Series Engines
Miscellaneous Publications		
3379090		Guide to Troubleshooting
3379133		Control Parts List
3379022		Governors Used on Cummins Engines
3379144		Fuel Systems Publications Rack Program
3379209		Fuel Systems Publications Rack Update Subscription Service Cummins Training Aids Catalog

Cummins Service Publications (Continued)

Cummins Installation Recommendations	
952849	Automotive Fuel System
3382576	Marine Fuel System
3382409	Construction, Mining, Logging, Agriculture, Fire Pump, Generator Sets, and Stationary Power Fuel System
Film Recall Booklets (These publications have 33 mm slide training films available)	
3387049-OR	PT (type G) AFC Fuel Pump Calibration
985577-R	PT (type G) Fuel Pump Calibration
983601-R	Principles of PT Mechanical Governors
983602-R	PT (type G) Fuel Pump Operation and Adjustment
983603-R	PT (type R) Fuel Pump Operation and Adjustment
983604-R	PT (type B and C) Injectors
983608-R	Cummins PT Injectors
983609-R	Theory of Cummins PT Fuel System
983658-R	Cummins PT (type D) Injector
985576-R	Injector Calibration
985575-R	Injector Leakage Tester ST-990
983657-R	PT (type D) Injector Disassembly and Assembly
985605-R	Cummins Aneroids
985618-R	Troubleshooting PT Fuel System - Program 1
985620-R	Troubleshooting PT Fuel System - Program 2
985621-R	Troubleshooting PT Fuel System - Program 3
985622-R	Troubleshooting PT Fuel System - Program 4
3387050-R	PT (type G) AFC Fuel Pump Operation and Adjustments
3387066-R	PT (type G) AFC Fuel Pump Troubleshooting
3387137-R	Troubleshooting Driveability Complaints

Katolight Service - Master Repair Manual - Page 2763

ITEM NUMBER
3032429

REVISIONS				
REV	DESCRIPTION	DRAFTER	CHECKER	APPROVAL
07	010450-000 REVISED	25OCT01 DWA	06NOV01 DAC	

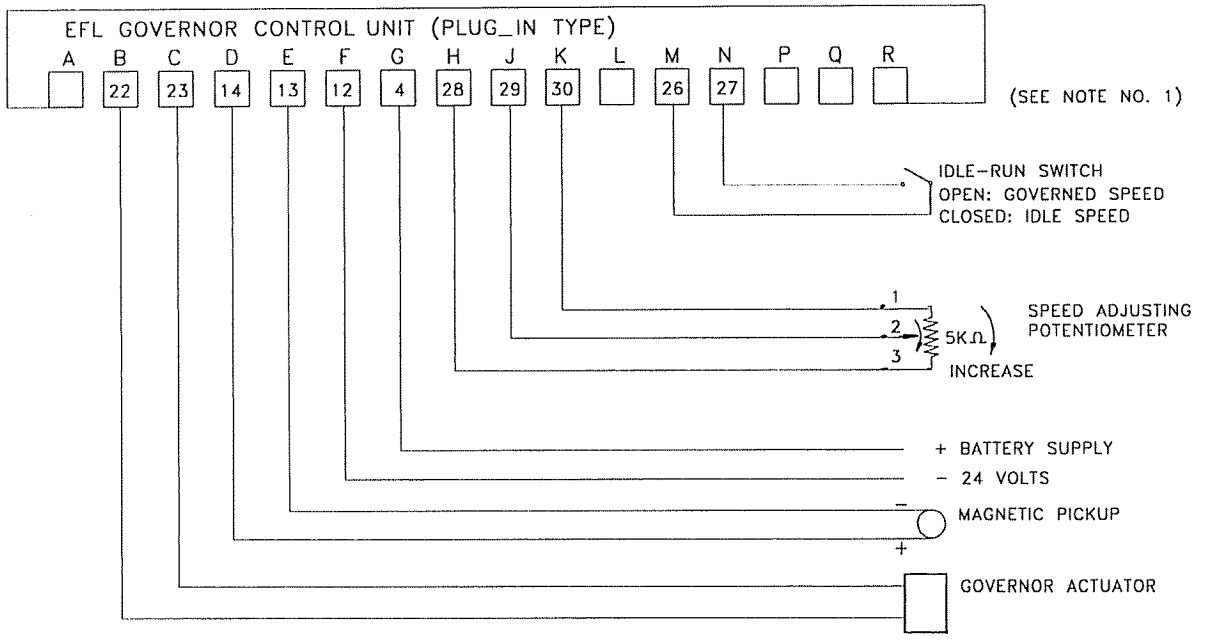

1. LETTERS REFER TO THE PLUG IN CONNECTOR TERMINAL ON THE CONTROLLER. NUMBERS ARE THE EQUIVALENT TERMINAL CONNECTIONS ON THE TERMINAL BLOCKS IN THE ENGINE INSTRUMENT PANEL ENCLOCURE.

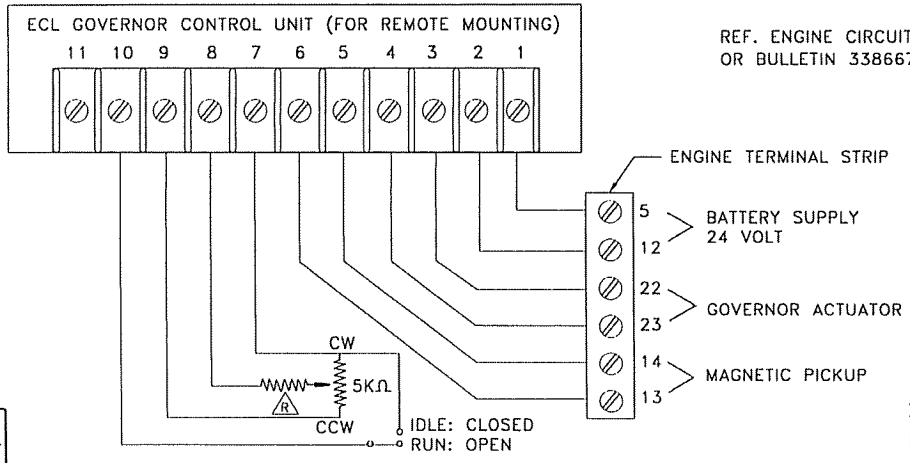

REF. ENGINE CIRCUIT DIAGRAM 3053051 OR BULLETIN 3386674

Ⓡ FOR FINE SPEED ADJUSTMENT ADD A 120KΩ RESISTOR. FOR WIDE SPEED ADJUSTMENT, OMIT RESISTOR.

DIMENSIONING AND TOLERANCING PER ASME Y14.5M-1994	MADE FROM CASTING/FORGING/DIE NO.:
LAST DATUM LETTER USED: / LAST SECTION LETTER USED:	MATERIAL:
REF. ITEM NO.:	PROCESS:
MODEL GRAPHICS: RASTER	MFG. METHOD:
UNLESS OTHERWISE SPECIFIED THE FOLLOWING GENERAL NOTES SHALL APPLY	INSP. STD.:
DIMENSIONS ARE IN: [ ] ARE:	ENGR. STD.:
WALL THICKNESS:	THIS DOCUMENT (AND THE INFORMATION SHOWN THEREON) IS CONFIDENTIAL AND PROPRIETARY AND SHALL NOT BE DISCLOSED TO OTHERS IN HARD COPY OR ELECTRONIC FORM, REPRODUCED BY ANY MEANS, OR USED FOR ANY PURPOSE WITHOUT WRITTEN CONSENT OF CUMMINS INC.
DRAFT ANGLES:	
FILLET RADII:	
EDGE RADII:	
FINISH STOCK:	
SURFACE FINISH:	
DRAFTER L.CROSSMAN 14JUL01	
CHECKER W.L. 20JUL01	
DESIGN APPROVAL	

Cummins Inc.

ITEM NAME	WIRING,ELECTRIC GOVERNOR
IDENTIFIER	DIAGRAM
SIZE / CODE IDENT NO. / ITEM NUMBER	D / 3032429
SCALE NONE / ITEM CONTROL CTC / SHEET	1 OF 2

Katolight Service - Master Repair Manual - Page 2764

ITEM NUMBER
3032429

REVISIONS				
REV	DESCRIPTION	DRAFTER	CHECKER	APPROVAL
07	010450-000 REVISED	25OCT01 DMA	08NOV01 DAC	

TO LOAD

#22AWG + CONNECT TO SYSTEM 1 BATTERY AT B

CONNECT TO SYSTEM 2 BATTERY AT X + #22AWG

GENERATOR NO. 1 CIRCUIT BREAKER

AUXILIARY CIRCUIT BREAKER CONTACT

AUXILIARY CIRCUIT BREAKER CONTACT

GENERATOR NO.2 CIRCUIT BREAKER

ALTERNATE WIRING WHEN THE DROOP/ISOCHRONOUS SWITCH IS REQUIRED

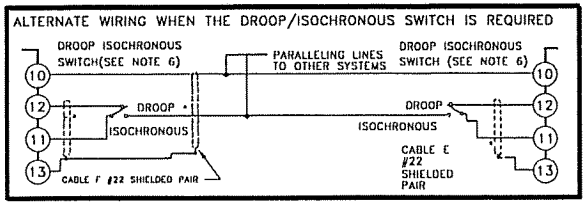

PARALLELING LINES TO OTHER SYSTEMS

#22 SHIELDED PAIR

#18 AWG SEE NOTE 2&3

#18AWG SEE NOTE 2&3

#18AWG SEE NOTE 2&3 SEE NOTE 5

STEPDOWN POTENTIAL TRANSFORMER AS REQUIRED

#22 SHIELDED TRIAD

REMOTE SPEED

5K CW

#14 TWISTED PAIR

POWER SWITCH SEE NOTE 4

#14 TWISTED PAIR

#22 SHIELDED TRIAD

REMOTE SPEED

5K CW

#18

#18

SYSTEM 1 BATTERY + SEE NOTE1

SYSTEM 2 BATTERY SEE NOTE 1 +

OFF ON

OFF ON

GOVERNOR CONTROL UNIT

UNIT NO. 1

GOVERNOR CONTROL UNIT

UNIT NO. 2

+3.5 VDC

+3.5VDC

DIGITAL LOAD SENSING MODULE

DIGITAL LOAD SENSING MODULE

#18AWG SEE NOTE 2&3

#18AWG SEE NOTE 2&3

#18AWG SEE NOTE 2&3 SEE NOTE 5

STEPDOWN POTENTIAL TRANSFORMER AS REQUIRED

FORWARD POWER RELAY

NO

REVERSE POWER RELAY

NC

KW METER

KW METER

FORWARD POWER RELAY

NO

REVERSE POWER RELAY

NC

GENERATOR 1

GENERATOR NO 2

SHIELDED TWISTED TRI

SHIELDED TWISTED TRI

ENGINE TERMINAL STRIPS REF: ENGINE CIRCUIT BOARD DIAGRAM 3053051 OR BULLETIN 3386674

EFC-ELECTRIC GOVERNOR

1. SYSTEMS BATTERY SUPPLY: IF MORE THAN ONE ENGINE IS STARTED USING THE SAME BATTERY SUPPLY, USE SEPARATE BATTERY SUPPLY FOR EACH SYSTEM. TWIST POWER LEADS AS SHOWN. USE SHIELDED LEADS AS SHOWN.
2. SELECT CURRENT TRANSFORMERS TO PROVIDE 2.5 TO 5.0 AMPS AT FULL RATED LOAD. CURRENT TRANSFORMERS REQUIRE NOMINAL 0.32 VA/PHASE AT 2.5 AMPS 1.25 VA/PHASE AT 5.0 AMPS.
3. OBSERVE CURRENT TRANSFORMER POLARITY MARKINGS WHEN CONNECTING.
4. POWER SWITCH CURRENT RATING: 10 AMPS.
5. PHASING OF POTENTIAL TO TERMINALS 1,2 AND 3 IS NECESSARY TO KEEP EACH SIGNAL IN ITS CORRECT PHASE RELATIONSHIP, IF THE GENERATOR VOLTAGE IS NOT THE SAME AS THE VOLTAGE RANGE ON TERMINALS 1,2 AND 3 OF THE ISOCHRONOUS LOAD SHARING CONTROL, A STEP DOWN TRANSFORMER IS REQUIRED. CORRECT PHASING OF THE TRANSFORMER LEADS IS NECESSARY. STEP DOWN TRANSFORMERS REQUIRE NOMINAL 1 VA/PHASE.
6. DROOP/ISOCHRONOUS SWITCH IS NOT REQUIRED IF UNITS ARE ALWAYS OPERATED IN THE ISOCHRONOUS MODE.

DIMENSIONING AND TOLERANCING PER ASME Y14.5M-1994	MADE FROM CASTING/FORGING/DIE NO.:
LAST DATUM LETTER USED: / LAST SECTION LETTER USED:	MATERIAL:
REF. ITEM NO.:	PROCESS:
MODEL GRAPHICS: RASTER	MFG. METHOD:
UNLESS OTHERWISE SPECIFIED THE FOLLOWING GENERAL NOTES SHALL APPLY	INSP. STD.:
DIMENSIONS ARE IN: [ ] ARE:	ENGR. STD.:
WALL THICKNESS:	THIS DOCUMENT (AND THE INFORMATION SHOWN THEREON) IS CONFIDENTIAL AND PROPRIETARY AND SHALL NOT BE DISCLOSED TO OTHERS IN HARD COPY OR ELECTRONIC FORM, REPRODUCED BY ANY MEANS, OR USED FOR ANY PURPOSE WITHOUT WRITTEN CONSENT OF CUMMINS INC.
DRAFT ANGLES:	
FILLET RADII:	**Cummins Inc.**
EDGE RADII:	ITEM NAME: WIRING,ELECTRIC GOVERNOR
FINISH STOCK:	IDENTIFIER: DIAGRAM
SURFACE FINISH:	SIZE D / CODE IDENT NO. / ITEM NUMBER 3032429
DRAFTER D.E.HASTINGS 08DEC87	SCALE NONE / ITEM CONTROL CTC / SHEET 2 OF 2
CHECKER FAWBUSH 17DEC87	
DESIGN APPROVAL	

THIRD ANGLE PROJECTION

INCHES / MILLIMETERS

GOVERNORS AMERICA CORP.

ENGINE GOVERNING SYSTEMS

ESD 2100 SERIES

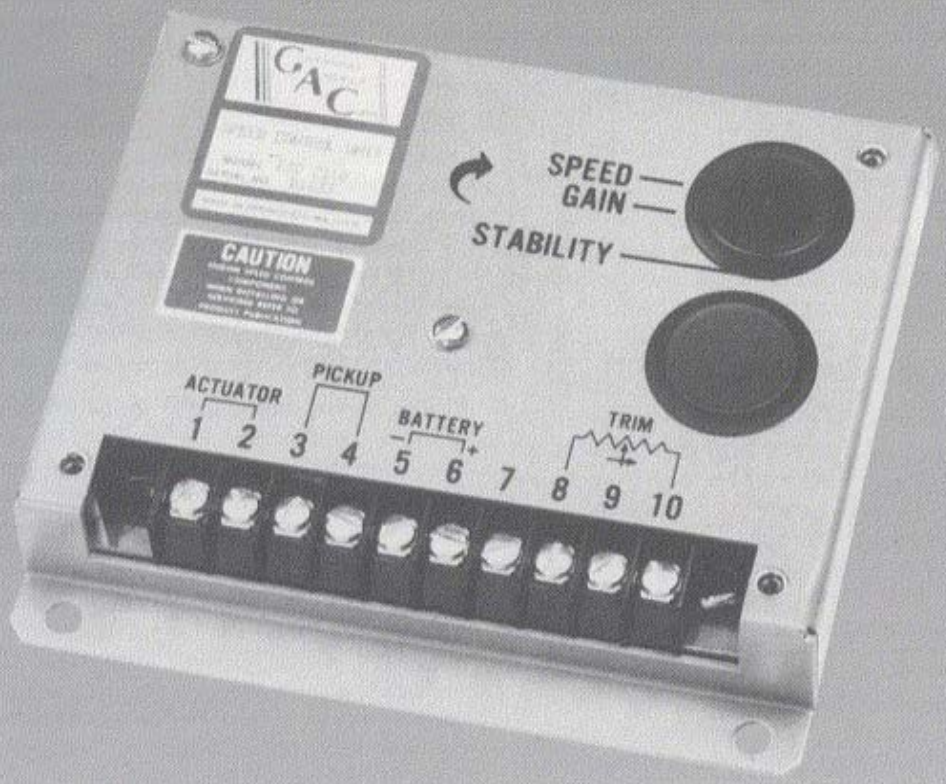

SPEED CONTROL UNIT

MEMBER EGSA Electrical Generating Systems Association

GOVERNORS AMERICA CORP. • 720 Silver Street • Agawam, MA 01001-2907, USA

ESD 2100 SERIES SPEED CONTROL UNIT

PRODUCT TECHNICAL INFORMATION

PTI 1020

October 2000
MPC

INTRODUCTION

The ESD 2100 SERIES speed control unit is an all electronic device designed to control engine speed with fast and precise response to transient load changes. This closed loop control, when connected to a proportional electric actuator and supplied with a magnetic speed sensor signal, will control a wide variety of engines in an isochronous mode. It is designed for high reliability and built ruggedly to withstand the engine environment.

Simplicity of installation and adjustment was foremost in the design. Two non interacting performance controls allow near optimum response to be easily obtained.

Other features include; protection against reverse battery voltage and transient voltages, fail-safe design in the event of loss of speed sensor signal or battery supply.

DESCRIPTION

Engine speed information for the speed control unit is usually received from a magnetic speed sensor. Any other signal generating device may be used, provided the generated frequency is proportional to engine s,d and meets the voltage input and frequency range specification. The speed sensor is typically mounted in close proximity to an engine driven ferrous gear, usually the engine ring gear. As the teeth of the gear pass the magnetic sensor, a signal is generated which is proportional to engine speed.

Signal strength must be within the range of the input amplifier. An amplitude of 0.5 to 120 volts RMS is required to allow the unit to function within its design specifications. The speed signal is applied to Terminals 3 and 4 of the speed control unit. Between these terminals there is an input impedance of over 33,000 ohms. Terminal 4 is internally connected to Terminal 5, battery negative. Termination of the speed sensor shield should be made at Terminal 4. Only one end of the cable shield should be connected.

When a speed sensor signal is received by the controller, the signal is amplified and shaped by an internal circuit to provide an analog speed signal. If the speed sensor monitor does not detect a speed sensor signal, the output circuit of the speed control unit will turn off all current to the actuator. A summing circuit receives the speed sensor signal along with the speed adjust set point input. The speed range has a ratio of 7:1 and is adjusted with a 25 turn potentiometer. The output from the summing circuit is the input to the dynamic control section of the speed control unit. The dynamic control circuit, of which the gain and stability adjustments are part, has a control function that will provide iso chronous and stable performance for most engine fuel systems.

The speed control unit output circuit is influenced by the integral gain and stability performance adjustments. The governor system sensitivity is increased with clockwise rotation of the gain adjustment. The gain adjustment has a non-linear range of 33:1. The stability adjustment, when advanced clockwise, increases the time rate of response of the governor system in order to match various time constants of a wide variety of engines. Since the speed control unit is a P I D device, the "D", derivative portion can be varied when required (See Instability section).

During engine cranking, the actuator is fully energized and will move to the maximum fuel position. The actuator will remain in that state during engine cranking and acceleration. While the engine is at steady load, the actuator will be energized with sufficient current to maintain the governor speed setpoint.

The output circuit provides switching current at a frequency of about 500 Hz. to drive the actuator. The switching frequency is well beyond the natural frequency of the actuator, thus there is no visible motion of the actuator output shaft. Switching of the output transistor reduces its internal power dissipation for efficient power control. The output circuit can provide current of up to 10 amps continuous at 25°C. at battery voltages up to 40 VDC to drive an actuator. The actuator responds to the average current to position the engine fuel control lever.

The speed control unit has several performance and protection features which enhance the governor system. A speed anticipation circuit will minimize speed overshoot on engine start-up or when large increments of load are applied to the engine.

The ESD 2100 Series speed control units are compatible with Governors America Corp. proportional actuators (except the ACB2000) as well as those of other manufacturers.

Katolight Service - Master Repair Manual - Page 2766

ESD 2100 SERIES SPEED CONTROL UNITS

ESD 2110 . . . . . Standard Unit
ESD 2112. . . . Variable Speed Operation
ESD 2112-150 . . . . . .Variable Speed With Added Dead Time

SPECIFICATIONS

PERFORMANCE

Isochronous Operation / Steady State Stability	± 0.25% or better
Speed Range/Governor	1K – 7.5K Hz continuous
Speed Drift With Temperature	±1% maximum
Speed Trim Range	±450 Hz Typical
Remote Variable Speed Range	500 – 6K Hz. or any part thereof
Terminal 9 Sensitivity	120 Hz., ± 15 Hz. / Volt @ 250K impedance

ENVIRONMENTAL

Ambient Operating Temperature Range	– 40° to + 180°F (– 40° to + 85°C)
Relative Humidity	up to 95%
All Surface Finishes	Fungus proof & corrosion resistant

INPUT POWER

Supply	10-40VDC (transient & reverse voltage protected)*
Polarity	Negative ground (case isolated)
Power Consumption	60 ma continuous plus actuator current
Maximum Actuator Current at 25°C (77°F)	10 Amps continuous
Speed Sensor Signal	0.5-120 Volts RMS

RELIABILITY

Vibration	5 G @ 20-500 Hz.
Testing	Functionally tested.

PHYSICAL

Dimensions	See outline (Diagram 1)
Weight	1.2 lbs. (545 grams)
Mounting	Any position, vertical preferred

*Reverse voltage is protected against by a parallel diode. A 15 amp fuse must be installed in the positive battery lead. See Diagram 1.

APPLICATION AND INSTALLATION INFORMATION

The speed control unit is rugged enough to be placed in a control cabinet or engine mounted enclosure with other dedicated control equipment. If water, mist, or condensation is to come in contact with the controller, the controller should be mounted vertically. This will allow the fluid to drain away from the speed control unit. Extreme heat should be avoided.

WARNING
An overspeed shutdown device, independent of the governor system, should be provided to prevent loss of engine control which may cause personal injury or equipment damage.

WIRING

Basic electrical connections are illustrated in Diagram 2. Actuator and battery connections to Terminals 1, 2, 5, and 6 should be # 16 AWG (1.3 mm sq.) or larger. Long cables require an increase in the wire size to minimize voltage drops. The battery positive (+) input, Terminal 6, should be fused for 15 amps as illustrated in Diagram 1.

Magnetic speed sensor connections to Terminals 3 and 4 **MUST BE TWISTED AND/OR SHIELDED** for their entire length. The speed sensor cable shield should only be connected to Terminal 4. The shield should be insulated to insure no other part of it comes in contact with engine ground, otherwise stray signals may be introduced into the speed control unit. With the engine stopped, adjust the gap between the magnetic speed sensor and the ring gear teeth. The gap should not be any smaller than 0.020 in. (0.45 mm). Usually, backing out the speed sensor 3/4 turn after touching the ring gear tooth will achieve a satisfactory air gap. The magnetic speed sensor voltage should be at least 1 VAC RMS during cranking.

Katolight Service - Master Repair Manual - Page 2767

DIAGRAM 1
SYSTEM WIRING/OUTLINE

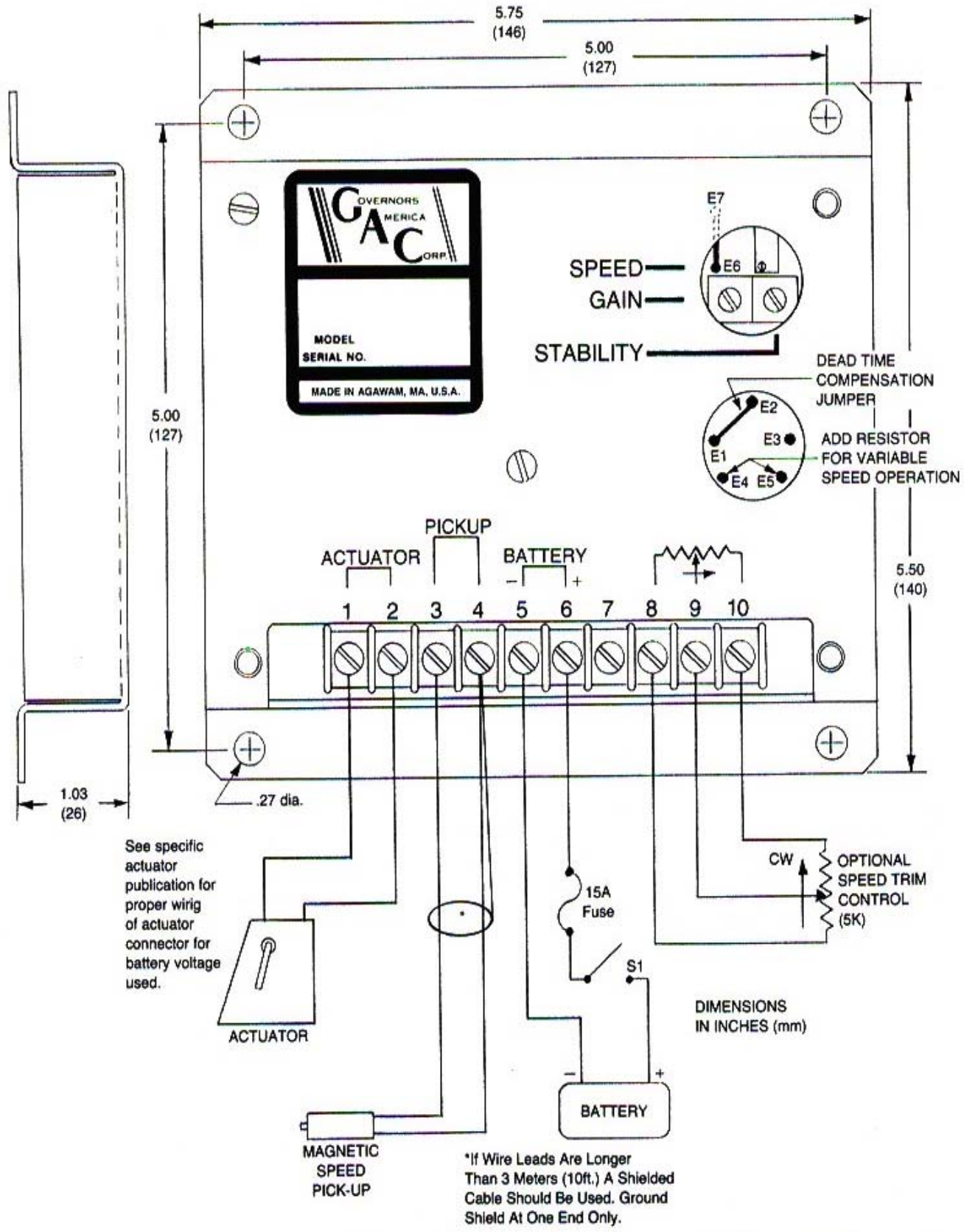

ADJUSTMENTS

Before Starting Engine

Check to insure the **GAIN** and **STABILITY** adjustments, and if applied, the external **SPEED TRIM CONTROL** are set to mid position.

Start Engine

The controller is factory set to operate at approximately engine idle speed. (1000 HZ. speed sensor signal)

Crank the engine with D.C. power applied to the governor system. The actuator will energize to the maximum fuel position until the engine starts. The governor system should be controlling the engine at a low idle speed. If the engine is unstable after starting, turn the **GAIN** and **STABILITY** adjustments counterclockwise until the engine is stable.

Governor Speed Setting

The governed speed set point is increased by clockwise rotation of the **SPEED** adjustment control. Remote speed adjustment can be obtained with an optional Speed Trim Control. (See Diagram 1)

Governor Performance

Once the engine is at operating speed and at no load, the following governor performance adjustments can be made.

A. Rotate the **GAIN** adjustment clockwise until instability develops. Gradually move the adjustment counterclockwise until stability returns. Move the adjustment 1/8 of a turn further counterclockwise to insure stable performance.

B. Rotate the **STABILITY** adjustment clockwise until instability develops. Gradually move the adjustment counterclockwise until stability returns. Move the adjustment 1/8 of a turn further counterclockwise to insure stable performance.

C. Gain and stability adjustments may require minor changes after engine load is applied. Normally, adjustments made at no load achieve satisfactory performance. A strip chart recorder can be used to optimize the adjustments further.

If instability cannot be corrected or further performance improvements are required, refer to section on SYSTEM TROUBLESHOOTING.

Katolight Service - Master Repair Manual - Page 2769

SYSTEM TROUBLESHOOTING

System Inoperative

If the engine governing system does not function, the fault may be determined by performing the voltage tests described in steps 1 thru 6. (+) and (−) refer to meter polarity. Should normal values be indicated during the troubleshooting steps, then the fault may be with the actuator or the wiring to the actuator. See actuator publication for testing details.

Step	Terminals	Normal Reading	Probable Cause of Abnormal Reading
1	5(−) & 6(+)	Battery Supply Voltage (12, 24, or 32 VDC)	1. DC battery power not connected. Check for blown fuse. 2. Low battery voltage. 3. Wiring error.
2	8(+) & 10(−)	6.5-7.1 with speed trim 7.1-7.9 without speed trim	1. Speed trim shorted or miswired. 2. Defective unit.
3	7(+) & 10 (−)	1.8-2.6V	1. Low battery voltage. 2. Defective unit.
4	3(+) & 4(−)	1.0 VAC RMS min., while cranking	1. Gap between speed sensor and gear teeth too great. Check gap. 2. Improper or defective wiring to the speed sensor. Resistance between 3 and 4 should be 30 to 300 ohms. 3. Defective speed sensor.
5	7(+) & 10(−) while cranking	8.4-9.4V	1. **SPEED** adjustment set too low. 2. Wiring error to actuator. 3. Defective speed control unit. 4. Defective actuator.
6	2(−) & 6(+)	0.8-1.5V while cranking	1. Wiring error to actuator. 2. Defective speed control unit. 3. Defective actuator.

Katolight Service - Master Repair Manual - Page 2770

Unsatisfactory Performance

If the governing system functions poorly, perform the following tests

Symptom	Test	Probable Fault
Engine overspeed	1. Do Not Crank, Apply DC power to the governor system	1. Actuator goes to full fuel. Then disconnect speed sensor at Terminals 3 and 4. If actuator still at full fuel - speed control unit defective. If actuator at minimum fuel position - erroneous speed signal. Check speed sensor cable.
	2. Manually hold the engine at the desired running speed. Measure the DC voltage between Terminals 2 (–) and 6 (+).	1. If the voltage reading is 0.8 to 1.5 VDC, a) **SPEED** adjustment set above desired speed. b) Defective speed control unit. 2. If the voltage reading is above 1.5 VDC, actuator or linkage binding 3. Set point of overspeed shutdown device set too low. 4. If the voltage reading is below 0.8 VDC, defective speed control unit
Actuator does not energize fully while cranking.	1. Measure the DC voltage between Terminals 2 (–) & 6 (+) on the speed control unit. Should be 0.8 to 1.5 volts; if not: 2. Momentarily connect Terminal 2 to 6. The actuator should move to the full fuel position.	1. Replace the battery if weak or undersized. 2. Actuator wiring incorrect. 1. Actuator or battery wiring in error. 2. Actuator or linkage binding. 3. Defective actuator.
Engine remains below desired governed speed	1. Measure the actuator output, Terminals 1 & 2 while running under governor control.	1. If voltage measurement is within 1.5 volts or less of the battery supply voltage level, then fuel control restricted from reaching full fuel position. Possibly due to mechanical governor, carburetor spring, or linkage interference. 2. If not, increase speed setting.

SYSTEM TROUBLESHOOTING

Insufficient Magnetic Speed Sensor Signal

A strong magnetic speed sensor signal will eliminate the possibility of missed or extra pulses. The speed control unit will govern well with 0.5 volts RMS speed sensor signal. A speed sensor signal of 3 volts RMS or greater at governed speed is recommended. Measurement of the signal is made at Terminals 3 and 4.

The amplitude of the speed sensor signal can be raised by reducing the gap between the speed sensor tip and the engine ring gear. The gap should not be any smaller than 0.020 in. (0.45 mm). When the engine is stopped, back the speed sensor out by ¾ turn after touching the ring gear tooth to achieve a satisfactory air gap.

Electromagnetic Compatibility (EMC)

EMI SUSCEPTIBILITY – The governor system can be adversely affected by large interfering signals that are conducted through the cabling or through direct radiation into the control circuits.

All GAC speed control units contain filters and shielding designed to protect the units sensitive circuits from moderate external interfering sources.

Although it is difficult to predict levels of interference, applications that include magnetos, solid state ignition systems, radio transmitters, voltage regulators or battery chargers; should be considered suspect as possible interfering sources.

If it is suspected that external fields either those that are radiated or conducted, are or will affect the governor systems operation; it is recommended to use shielded cable for all external connections. Be sure that only one end of the shields including the speed sensor shield, is connected to a single point on the case of the speed control unit. Mount the speed control unit to a grounded metal back plate or place it in a sealed metal box.

Radiation is when the interfering signal is radiated directly through space to the governing system. To isolate the governor system electronics from this type of interference source, a metal shield or a solid metal container is usually effective.

Conduction is when the interfering signal is conducted through the interconnecting wiring to the governor system electronics. Shielded cables and installing filters are common remedies.

As an aid to help reduce the levels of EMI of a conductive nature, a battery line filter and shielded cables is conveniently supplied by GAC in KT310. To reduce the levels of EMI of a radiated nature, a shielded container P/N CA114 can be sourced from GAC and its distributors.

In severe high energy interference locations such as when the governor system is directly in the field of a powerful transmitting source, the shielding may require to be a special EMI class shielding. For these conditions, contact GAC application engineering for specific recommendations.

Katolight Service - Master Repair Manual - Page 2771

Instability

Instability in a closed loop speed control system can be categorized into two general types. **PERIODIC** appears to be sinusoidal and at a regular rate. **NON-PERIODIC** is a random wandering or an occasional deviation from a steady state band for no apparent reason.

The **PERIODIC** type can be further classified as a fast or slow instability. Fast instability is a 3 Hz. or faster irregularity of the speed and is usually a jitter. Slow periodic instability is below 3 Hz., can be very slow, and is sometimes violent.

If fast instability occurs, this is typically the governor responding to engine firings. Raising the engine speed increases the frequency of instability and vice versa. If this is the case, cutting the jumper from E1 to E2 will reduce this tendency. In extreme cases, the removal of the E1 to E2 jumper may not take all the jitter out of the system. A second jumper, E6 to E7, may be removed to further stabilize the system. Post locations are illustrated in Diagram 1. Interference from powerful electrical signals can also be the cause. Turn off the battery chargers or other electrical equipment to see if the symptom disappears.

Slow instability can have many causes. Adjustment of the **GAIN** and **STABILITY** usually cures most situations by matching the speed control unit dynamics. If this is unsuccessful, the dead time compensation can be modified. Add a capacitor from posts **E2** to **E3** (negative on E2). Post locations are illustrated in Diagram 1. Start with 10 mfds. and increase until instability is eliminated. The control system can also be optimized for best performance by following this procedure.

If slow instability is unaffected this procedure, evaluate the fuel system and engine performance. Check the fuel system linkage for binding, high friction, or poor linkage. Be sure to check linkage during engine operation. Also look at the engine fuel system. Irregularities with carburetion or fuel injection systems can change engine power even with a constant throttle setting. This can result in speed deviations beyond the control of the governor system. Adding a small amount of droop can help stabilize the system for troubleshooting.

NON-PERIODIC instability should respond to the **GAIN** control. If increasing the gain reduces the instability, then the problem is probably with the engine. Higher gain allows the governor to respond faster and correct for the disturbance. Look for engine misfirings, an erratic fuel system, or load changes on the engine generator set voltage regulator. If the throttle is slightly erratic, but performance is fast, removing the jumper from E6 to E7 will tend to steady the system

If unsuccessful in solving instability, contact the factory for assistance.

GOVERNORS AMERICA CORP.

720 Silver St. • Agawam, MA 01001-2907, USA • (413) 786-5600

FAX (413) 786-5666

e-mail: info@governors-america.com

Internet: www.governors-america.com

GOVERNORS AMERICA CORP.

ENGINE GOVERNING SYSTEMS

ESD2200 SERIES

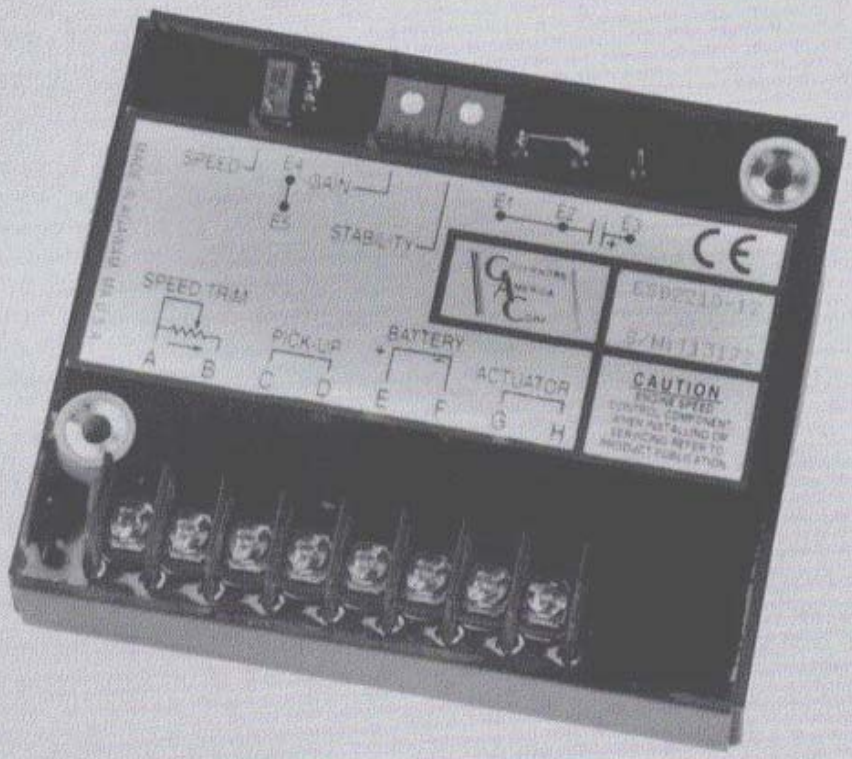

SPEED CONTROL UNIT

MEMBER
EGSA Electrical Generating Systems Association

GOVERNORS AMERICA CORP. • 720 Silver St. • Agawam, MA 01001, USA • (413) 786-5600

ESD2200 SERIES SPEED CONTROL UNIT

PRODUCT TECHNICAL INFORMATION

PTI 1022

JUNE 2000
MPC

INTRODUCTION

The ESD2000 SERIES speed control unit is an all electronic device designed to control engine speed with fast and precise response to transient load changes. This closed loop control, when connected to a proportional electric actuator and supplied with a magnetic speed sensor signal, will control a wide variety of engines in an isochronous mode. It is designed for high reliability and its hard potted design will withstand the engine environment.

Simplicity of installation and adjustment was foremost in the design. Two non interacting performance controls allow near optimum response to be easily obtained.

Other features include protection against reverse battery voltage and transient voltages, and fail-safe design in the event of loss of speed sensor signal or battery supply.

DESCRIPTION

Engine speed information for the speed control unit is usually received from a magnetic speed sensor. Any other signal generating device may be used provided the generated frequency is proportional to engine speed and meets the voltage input and frequency range specification. The speed sensor is typically mounted in close proximity to an engine driven ferrous gear, usually the engine ring gear. As the teeth of the gear pass the magnetic sensor, a signal is generated which is proportional to engine speed.

Signal strength must be within the range of the input amplifier. An amplitude of 0.25 to 50 volts RMS is required to allow the unit to function within its design specifications. The speed signal is applied to Terminals C and D of the speed control unit. Between these terminals there is an input impedance of over 5,000 ohms. Terminal D is internally connected to Terminal F, battery negative. Termination of the speed sensor shield may be made at Terminal D. The ideal connection of the speed sensor shield is as shown in Diagram 1. Only one end of the cable shield should be connected.

When a speed sensor signal is received by the controller, the signal is amplified and shaped by an internal circuit to provide an analog speed signal. If the speed sensor monitor does not detect a speed sensor signal, the output circuit of the speed control unit will turn off all current to the actuator. A summing circuit receives the the speed sensor signal along with the speed adjust set point input. The speed range has a ratio of 7:1 and is adjusted with a 25 turn potentiometer. The output from the summing circuit is the input to the dynamic control section of the speed control unit. The dynamic control circuit, of which the gain and stability adjustments are part, has a control function that will provide isochronous and stable performance for most engine fuel systems.

The speed control unit output circuit is influenced by the integral gain and stability performance adjustment. The governor system sensitivity is increased with clockwise rotation of the gain adjustment. The gain adjustment has a nonlinear range of 33:1. The stability adjustment, when advanced clockwise, increases the time rate of response of the governor system in order to match various time constants of a wide variety of engines. Since the speed control unit is a PID device, the "D," derivative portion can be varied when required (See instability section).

During engine cranking, the actuator is fully energized and will move to the maximum fuel position. The actuator will remain in that state during engine cranking and acceleration. While the engine is at steady load, the actuator will be energized with sufficient current to maintain the governor speed setpoint.

The output circuit provides switching current at a frequency of about 500 Hz. to drive the actuator. The switching frequency is well beyond the natural frequency of the actuator, thus there is no visible motion of the actuator output shaft. Switching of the output transistor reduces its internal power dissipation for efficient power control. The output circuit can provide current of up to 10 amps continuous at 25°C at battery voltages up to 32 VDC to drive an actuator. The actuator responds to the average current to position the engine fuel control lever.

The speed control unit has several performance and protection features which enhance the governor system. A speed anticipation circuit will minimize speed overshoot on engine start-up or when large increments of load are applied to the engine.

The ESD2000 Series speed control units are compatible with Governors America Corp. proportional actuators as well as some of those of other manufacturers.

Katolight Service - Master Repair Manual - Page 2774

ESD 2200 SERIES SPEED CONTROL UNITS

ESD 2210-12 . . . . . Standard Unit, 12V ESD 2210-24 . . . . . Standard Unit, 24V

SPECIFICATIONS

PERFORMANCE

Isochronous Operation / Steady State Stability	± 0.25% or better
Speed Range/Governor	1K - 7.5K Hz continuous
Speed Drift With Temperature	±1% maximum
Speed Trim Range	±250 Hz Typical
Terminal A Sensitivity	130 Hz., ± 15 Hz / Volt @ 5.1K impedance

ENVIRONMENTAL

Ambient Operating Temperature Range	-40° to + 180°F (-40° to +85°C)
Relative Humidity (Noncondensing)	up to 100%
All Surface Finishes	Fungus proof and corrosion resistant

INPUT POWER

Supply	-12; 8-20VDC, -24; 16-32 VDC (transient and reverse voltage protected)*
Polarity	Negative ground (case isolated)
Power Consumption	60 ma continuous plus actuator current
Maximum Actuator Current at 25°C (77°F)	10 Amps continuous
Speed Sensor Signal	0.25-50 Volts RMS

RELIABILITY

Vibration	5 G @ 20-500 Hz.
Testing	Functionally tested

PHYSICAL

Dimensions	See outline (Diagram 1)
Weight	12 oz. (347 grams)
Mounting	Any position, vertical preferred

*Reverse voltage is protected against by a parallel diode. A 15 amp fuse must be installed in the positive battery lead. See Diagram 1.

APPLICATION AND INSTALLATION INFORMATION

The speed control unit is hard potted and rugged enough to be placed in a control cabinet or engine mounted enclosure with other dedicated control equipment. Extreme heat should be avoided.

WARNING

An overspeed shutdown device, independent of the governor system, should be provided to prevent loss of engine control which may cause personal injury or equipment damage.

WIRING

Basic electrical connections are illustrated in Diagram 1. Battery and actuator connections to Terminals E, F, G, and H should be #16 AWG (1.3mm sq.) or larger. Long cables require an increase in the wire size to minimize voltage drops. The battery positive (+) input, Terminal E, should be fused for 15 amps as illustrated in Diagram 1.

Magnetic speed sensor connections to Terminals C and D **MUST BE TWISTED AND/OR SHIELDED** for their entire length. The speed sensor cable shield should ideally be connected as shown in Diagram 1. The shield should be insulated to insure no other part of the shield comes in contact with engine ground, otherwise stray signals may be introduced into the speed control unit. With the engine stopped, adjust the gap between the magnetic speed sensor and the ring gear teeth. The gap should not be any smaller than 0.020 in. (0.45 mm). Usually, backing out the speed sensor 3/4 turn after touching the ring gear tooth will achieve a satisfactory air gap. The magnetic speed sensor output voltage should be at least 1 VAC RMS during cranking.

Katolight Service - Master Repair Manual - Page 2775

Diagram 1. SYSTEM WIRING/OUTLINE

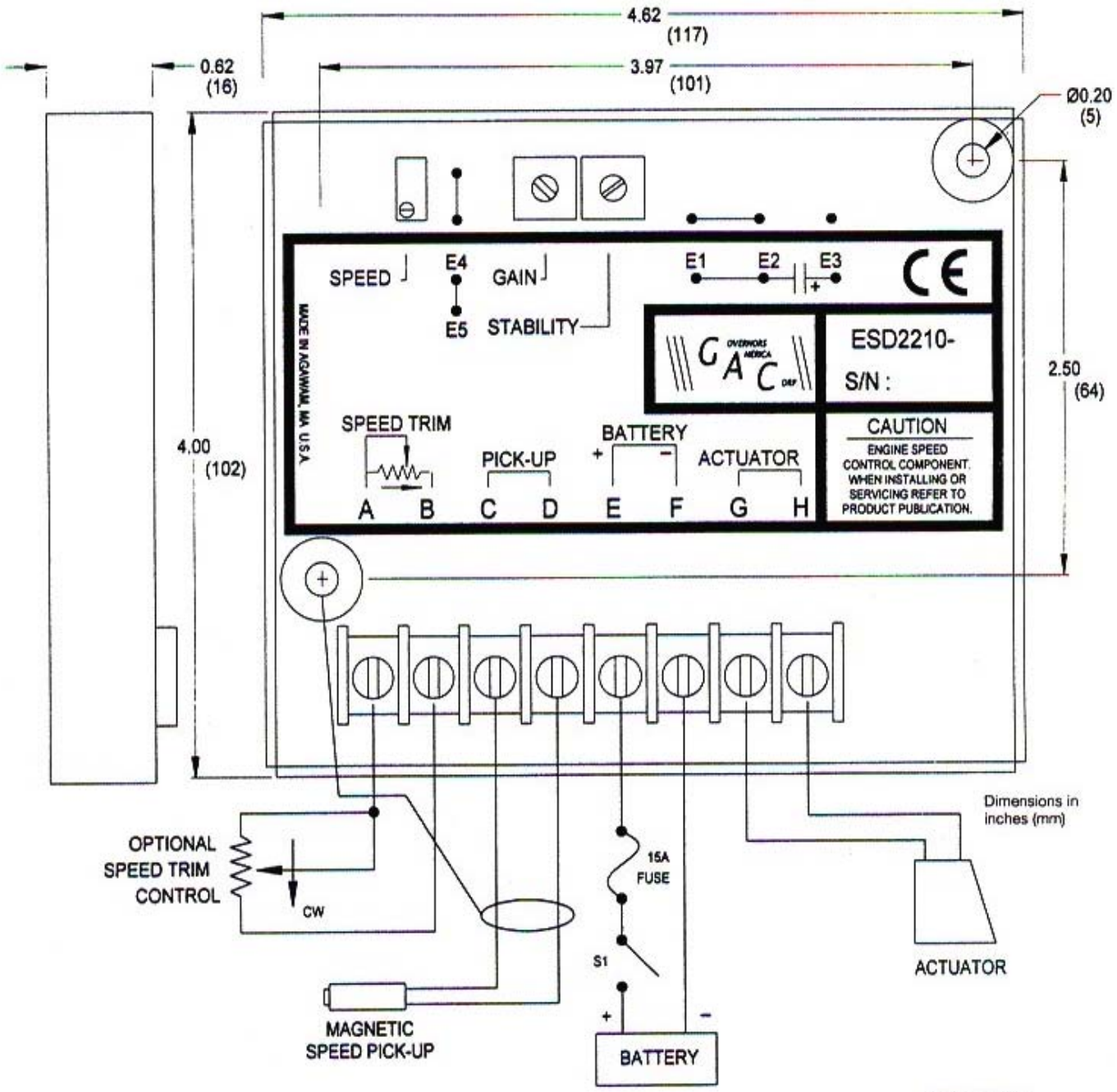

If wire leads are longer than 3 meters (10 ft.), a shielded cable should be used. Ground shield at one end only.

See specific actuator publication for proper wiring of actuator connector for battery voltage used.

ADJUSTMENTS

Before Starting Engine

Check to insure the **GAIN** and **STABILITY** adjustment, and if applied, the external **SPEED TRIM CONTROL** are set to mid position.

Start Engine

The controller is factory set to operate at approximately engine idle speed. (1000 HZ. speed sensor signal)

Crank the engine with D.C. power applied to the governor system. The actuator will energize to the maximum fuel position until the engine starts. The governor system should be controlling the engine at a *low idle* speed. If the engine is unstable after starting, turn the gain and stability adjustments counterclockwise until the engine is stable.

Governor Speed Setting

The governed speed set point is increased by clockwise rotation of the **SPEED** adjustment control. Remote speed adjustment can be obtained with an optional Speed Trim Control. (See Diagram 1)

Governor Performance

Once the engine is at operating speed and at no load, the following governor performance adjustments can be made:

A. Rotate the **GAIN** adjustment clockwise until instability develops. Gradually move the adjustment counterclockwise until stability returns. Move the adjustment 1/8 of a turn further counterclockwise to insure stable performance.

B. Rotate the **STABILITY** adjustment clockwise until instability develops. Gradually move the adjustment counterclockwise until stability returns. Move the adjustment 1/8 of a turn further counterclockwise to insure stable performance.

C. Gain and stability adjustments may require minor changes after engine load is applied. Normally, adjustments made at no load achieve satisfactory performance. A strip chart recorder can be used to optimize the adjustments further.

If instability cannot be corrected or further performance improvements are required, refer to the instability section under SYSTEM TROUBLESHOOTING.

SYSTEM TROUBLESHOOTING

System Inoperative

If the engine governing system does not function, the fault may be determined by performing the voltage tests described in steps 1 through 6. Positive (+) and negative (-) refer to meter polarity. Should normal values be indicated during troubleshooting steps, then the fault may be with the actuator or the wiring to the actuator. Tests are performed with the battery power on, engine off except where noted. See actuator publication for testing details.

Step	Terminals	Normal Reading	Probabale Cause of Abnormal Reading
1	E (+) & F(-)	Battery Supply Voltage (12 or 24 VDC)	1. DC battery power not connected. Check for blown fuse. 2. Low battery voltage. 3. Wiring error.
2	A(+) & B(-)	0-3.9 with speed trim 7.1-7.9 without speed trim	1. Speed trim shorted or miswired. 2. Defective unit.
3	C(+) & D(-)	1.0 VAC RMS min., while cranking	1. Gap between speed sensor and gear teeth too great. Check gap. 2. Improper of defective writing to the speed sensor. Resistance between C and D should be 300 to 1200 ohms. 3. Defective speed sensor.
4	E(+) & H(-)	0.8-1.5 V while cranking	1. Wiring error to actuator. 2. Defective speed control unit. 3. Defectve actuator.

Katolight Service - Master Repair Manual - Page 2777

Unsatisfactory Performance

If the governing system functions poorly, perform the following tests.

Symptom	Test	Probable Fault
Engine overspeed	1. Do Not Crank, Apply DC power to the governor system	1. Actuator goes to full fuel. Then disconnect speed sensor Terminals C and D If actuator still at full fuel–speed control unit defective. If actuator at minimum fuel position–erroneous speed signal. Check speed sensor cable.
	2. Manually hold the engine at the desired running speed. Measure the DC voltage between Terminals E(+) and H(-) on the speed control unit.	1. If the voltage reading is 1.0 to 1.5 VDC, a) **SPEED** adjustment set above desired speed, turn CCW. b) Defective speed control unit. 2. If the voltage reading is above 1.5 VDC, actuator or linkage binding. Replace actuator. 3. Set point of overspeed shutdown device set too low. 4. If the voltage reading is below 0.8 VDC, defective speed control unit.
Actuator does not energize fully while cranking.	1. Measure the DC voltage between Terminals E(+) and H(-) on the speed control unit. Should be 0.8 to 1.5 volts, if not:	1. Replace the battery if weak or undersized. 2. Actuator wiring incorrect. 3. If voltage is greater than 1.5V, SPEED set too low.
	2. Momentarily connect the Terminal E to H. The actuator should move to the full fuel position.	1. Actuator or battery wiring in error. 2. Actuator or linkage binding. 3. Defective actuator.
Engine remains below desired governed speed	1. Measure the actuator output, Terminals G & H, while running under governor control.	1. If voltage measurement is within 1.5 volts or more of the battery supply voltage level, then fuel control restricted from reaching full fuel position. Possibly due to mechanical governor, carburetor spring, or linkage interference. 2. If not, increase speed setting.

Katolight Service - Master Repair Manual - Page 2778

Insufficient Magnetic Speed Sensor Signal

A strong magnetic speed sensor signal will eliminate the possibility of missed or extra pulses. The speed control unit will govern well with 0.5 volts RMS speed sensor signal. A speed sensor signal of 3 volts RMS or greater at governed speed is recommended. Measurement of the signal is made at Terminals C and D.

The amplitude of the speed sensor signal can be raised by reducing the gap between the speed sensor tip and the engine ring gear. The gap should not be any smaller than 0.020 in. (0.45 mm). When the engine is stopped, back the speed sensor out by 3/4 turn after touching the ring gear tooth to achieve a satisfactory air gap.

Electromagnetic Compatibility (EMC)

EMI SUSCEPTIBILITY—The governor system can be adversely affected by large interfering signals that are conducted through the cabling or through direct radiation into the control circuits.

All GAC speed control units contain filters and shielding designed to protect the unit's sensitive circuits from moderate external interfering sources.

Although it is difficult to predict levels of interference, applications that include magnetos, solid state ignition systems, radio transmitters, voltage regulators or battery chargers, should be considered suspect as possible interfering sources.

If it is suspected that external fields, either those that are radiated or conducted, are or will affect the governor systems operation; it is recommended to use shielded cable for all external connections. Be sure that only one end of the shields including the speed sensor shield, is connected to a single point on the case of the speed control unit. Mount the speed control unit to a grounded metal back plate or place it in a sealed metal box.

Radiation is when the interfering signal is radiated directly through space to the governing system. To isolate the governor system electronics from this type of interference source, a metal shield or a solid metal container is usually effective.

Conduction is when the interfering signal is conducted through the interconnecting wiring to the governor system electronics. Shielded cables and installing filters are common remedies.

As an aid to help reduce the levels of EMI of a conductive nature, a battery line filter and shielded cables is conveniently supplied by GAC in KT310. To reduce the levels of EMI of a radiated nature, a shielded container P/N CA114 can be sourced from GAC and its distributors.

In severe high energy interference locations such as when the governor system is directly in the field of a powerful transmitting source, the shielding may require to be a special EMI class shielding. For these conditions, contact GAC application engineering for specific recommendations.

Instability

Instability in a closed loop speed control system can be categorized into two general types. **PERIODIC** appears to be sinusoidal and at a regular rate. **NON-PERIODIC** is a random wandering or an occasional deviation from a steady state band for no apparent reason.

The **PERIODIC** type can be further classified as a fast or slow instability. Fast instability is a 3 Hz. or faster irregularity of the speed and is usually a jitter. Slow periodic instability is below 3 Hz., can be very slow, and is sometimes violent.

If fast instability occurs, this is typically the governor responding to engine firings. Raising the engine speed increases the frequency of instability and vice versa. If this is the case, cutting the jumper from E1 to E2 will reduce this tendency. In extreme cases, the removal of the E1 to E2 jumper may not take all the jitter out of the system. A second jumper, E4 to E5, may be removed to further stabilize the system. Post locations are illustrated in Diagram 1. Interference from powerful electrical signals can also be the cause. Turn off the battery chargers or other electrical equipment to see if the symptom disappears.

Slow instability can have many causes. Adjustment of the **GAIN** and **STABILITY** usually cures most situations by matching the speed control unit dynamics. If this is unsuccessful, the dead time compensation can be modified. Add a capacitor from posts E2 to E3 (negative on E2). Post locations are illustrated in Diagram 1. Start with 10 mfds. and increase until instability is eliminated. The control system can also be optimized for best performance by following this procedure.

If slow instability is unaffected by this procedure, evaluate the fuel system and engine performance. Check the fuel system linkage for binding, high friction, or poor linkage. Be sure to check linkage during engine operation. Also look at the engine fuel system. Irregularities with carburetion or fuel injection systems can change engine power even with a constant throttle setting. This can result in speed deviations beyond the control of the governor system. Adding a small amount of droop can help stabilize the system for troubleshooting.

NON-PERIODIC instability should respond to the **GAIN** control. If increasing the gain reduces the instability, then the problem is probably with the engine. Higher gain allows the governor to respond faster and correct for the disturbance. Look for engine misfirings, an erratic fuel system, or load changes on the engine generator set voltage regulator. If the throttle is slightly erratic, but performance is fast, removing the jumper from E4 to E5 will tend to steady the system.

If unsuccessful in solving instability, contact your nearest factory authorized service center for assistance.

Katolight Service - Master Repair Manual - Page 2779

GOVERNORS AMERICA CORP.

ENGINE GOVERNING SYSTEMS

ESD5100 SERIES

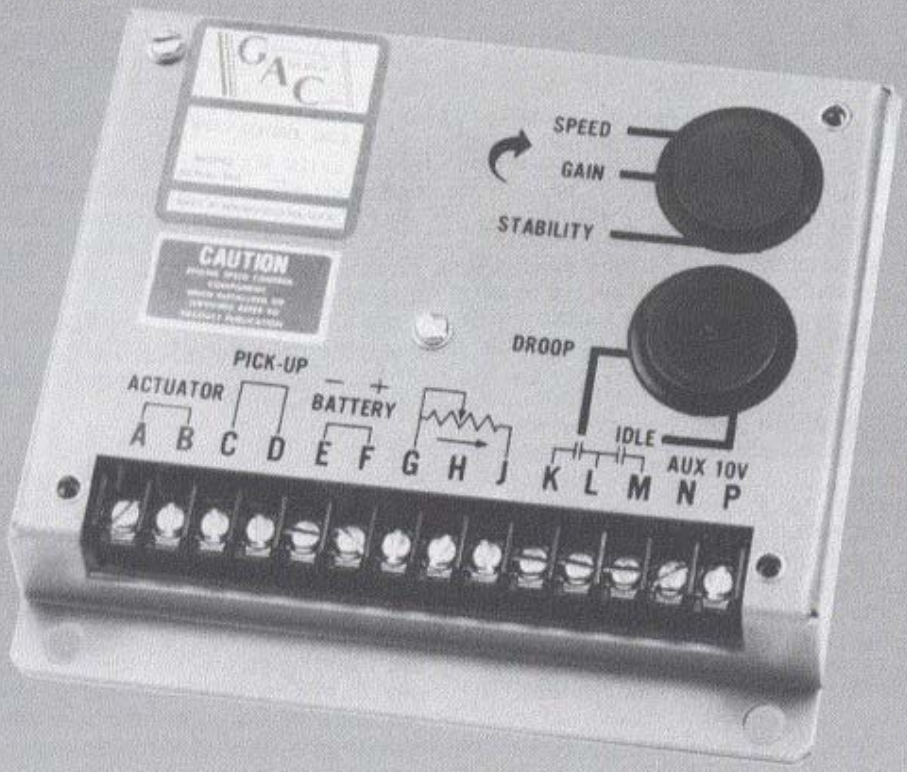

SPEED CONTROL UNIT

MEMBER EGSA Electrical Generating Systems Association

GOVERNORS AMERICA CORP. • 720 Silver St. • Agawam, MA 01001-2907, USA

ESD5100 SERIES SPEED CONTROL UNIT

PRODUCT TECHNICAL INFORMATION

PTI 1000

JULY 2000

FI

INTRODUCTION

The ESD5100 Series speed control unit is an all electronic device designed to control engine speed with fast and precise response to transient load changes. This closed loop control, when connected to a proportional electric actuator and supplied with a magnetic speed sensor signal, will control a wide variety of engines in an isochronous or droop mode. It is designed for high reliability and built ruggedly to withstand the engine environment.

Simplicity of installation and adjustment was foremost in the design. Non-interacting performance controls allow near optimum response to be easily obtained.

Other features include; adjustable droop and idle operation, inputs for accessories used in multi-engine or special applications, protection against reverse battery voltage, transient voltages, accidental short circuit of the actuator and fail-safe design in the event of loss of speed sensor signal or battery supply.

DESCRIPTION

Engine speed information for the speed control unit is usually received from a magnetic speed sensor. Any other signal generating device may be used provided the generated frequency is proportional to engine speed and meets the voltage input and frequency range specification. The speed sensor is typically mounted in close proximity to an engine driven ferrous gear, usually the engine ring gear. As the teeth of the gear pass the magnetic sensor, a signal is generated which is porportional to engine speed.

Signal strength must be within the range of the input amplifier. An amplitude of 0.5 to 120 volts RMS is required to allow the unit to function within its design specifications. The speed signal is applied to Terminals C and D of the speed control unit. Between these terminals there is an input impedance of over 33,000 ohms. Terminal D is internally connected to Terminal E, battery negative. Only one end of the cable shield should be connected.

When a speed sensor signal is received by the controller, the signal is amplified and shaped by an internal circuit to provide an analog speed signal. If the speed sensor monitor does not detect a speed sensor signal, the output circuit of the speed control unit will turn off all current to the actuator.

A summing circuit receives the speed sensor signal along with the speed adjust set point input. The speed range has a ratio of 8:1 and is adjusted with a 25 turn potentiometer. The output from the summing circuit is the input to the dynamic control section of the speed control unit. The dynamic control circuit, of which the gain and stability adjustments are part, has a control function that will provide isochronous and stable performance for most engine types and fuel systems.

The speed control unit output circuit is influenced by the gain and stability performance adjustments. The governor system sensitivity is increased with clockwise rotation of the gain adjustment. The gain adjustment has a range of 33:1. The stability adjustment, when advanced clockwise, increases the time rate of response of the governor system to match the various time constants of a wide variety of engines. The speed control unit is a P I D device, the "D", derivative portion can be varied when required (See Instability section).

During engine cranking, the actuator becomes fully energized and moves to the maximum fuel position, The actuator will remain in that state during engine cranking and acceleration. While the engine is at steady load, the actuator will be energized with sufficient current to maintain the governor speed set point.

The output circuit provides switching current at a frequency of about 500 Hz to drive the actuator. Since the switching frequency is well beyond the natural frequency of the actuator, there is no visible motion of the actuator output shaft. Switching the output transistors reduces its internal power dissipation for efficient power control. The output circuit can provide current of up to 10 amps continuous at 25°C for 12 and 24 VDC battery systems. The actuator responds to the average current to position the engine fuel control lever.

In standard operation, the speed control unit performance is isochronous. Droop governing can be selected by connecting terminals K and L and the percent of droop governing can be varied with the droop adjustment control. The droop range can be increased by connecting Terminals G and H.

The speed control unit has several performance and protection features which enhance the governor system. A speed anticipation circuit minimizes speed overshoot on engine start-up or when large increments of load are applied to the engine. Engine idle speed can be remotely selected and is adjustable. Accessory inputs to achieve variable speed operation and multi-engine control can be accepted by the ESD5100 Series speed control unit from GAC load sharing modules, automatic synchronizers, ramp generators and other accessory engine control modules. Protection against reverse battery voltage and transient voltages is provided. The design is fail-safe in the event of loss of speed sensor signal or battery supply.

The ESD5100 Series speed control unit is compatible with GOVERNORS AMERICA CORP. proportional electric actuators as well as those of other manufacturers.

Katolight Service - Master Repair Manual - Page 2782

SPECIFICATIONS

PERFORMANCE

Isochronous Operation/Steady State Stability	± 0.25% or better
Speed Range/Governor	1K — 7.5K Hz continuous
Speed Drift With Temperature (Governor and Speed Switch)	± 1% maximum
Idle Adjust CW	Min. 1200 Hz. below set speed
Idle Adjust CCW	Min. 4100 Hz. below set speed
Droop Range	1 — 5% regulation*
Droop Adj. Max (H-G and K-L Jumpered)	875 Hz., ± 75 Hz. per 1.0 A change
Droop Adj. Min. (H-G Open, K-L Jumpered)	15 Hz., ± 6 Hz. per 1.0 A change
Speed Trim Range	± 200 Hz.
Remote Variable Speed Range	500 — 7.5K Hz. or any part thereof
Terminal Sensitivity	
J	100 Hz., ± 15 Hz / Volt @ 5.0 K impedance
L	735 Hz., ± 60 Hz / Volt @ 65 K impedance
N	148 Hz., ± 10 Hz / Volt @ 1 Meg. impedance
P	10 VDC Supply @ 20 ma Max.

ENVIRONMENTAL

Ambient Operating Temperature Range	−40° + 180°F (−40° to + 85°C)
Relative Humidity	up to 95%
All Surface Finishes	Fungus proof & corrosion resistant

INPUT POWER

Supply	12 or 24 VDC Battery Systems (transient & reverse voltage protected)**
Polarity	Negative ground (case isolated)
Power Consumption	50 ma continuous plus acutator current
Maximum Actuator Current at 25°C (77°F)	10 Amps continuous***
Speed Sensor Signal	0.5-120 Volts RMS

RELIABILITY

Vibration	1 G @ 20-100 Hz.
Testing	100% Functionally tested.

PHYSICAL

Dimensions	See outline (Diagram 1)
Weight	1.2 lbs. (545 grams)
Mounting	Any position, vertical preferred

*Droop is based on a speed sensor frequency of 4000 Hz and an actuator current change of 1 amp from no load to full load. Applications with higher speed sensor signal will experience less percentage of droop. Applications with more actuator current change will experience higher percentages of droop. See droop description for specific details on operation of droop ranges.

**Protected against reverse voltage by a series diode. A 15 amp fuse must be installed in the positive battery lead. For 32V systems, order ESD5232

***Protected against short circuit to actuator (shuts off current to actuator), unit automatically turns back on when short is removed.

ESD 5100 Series (Popular Executions)

ESD 5119 - Reverse Acting / EFC Actuator

ESD 5120 - Forward Acting / EFC Actuator / ADC 100 Series / ACE 110 Series

Katolight Service - Master Repair Manual - Page 2783

DIAGRAM 1 **ESD5100 SERIES WIRING/OUTLINE**

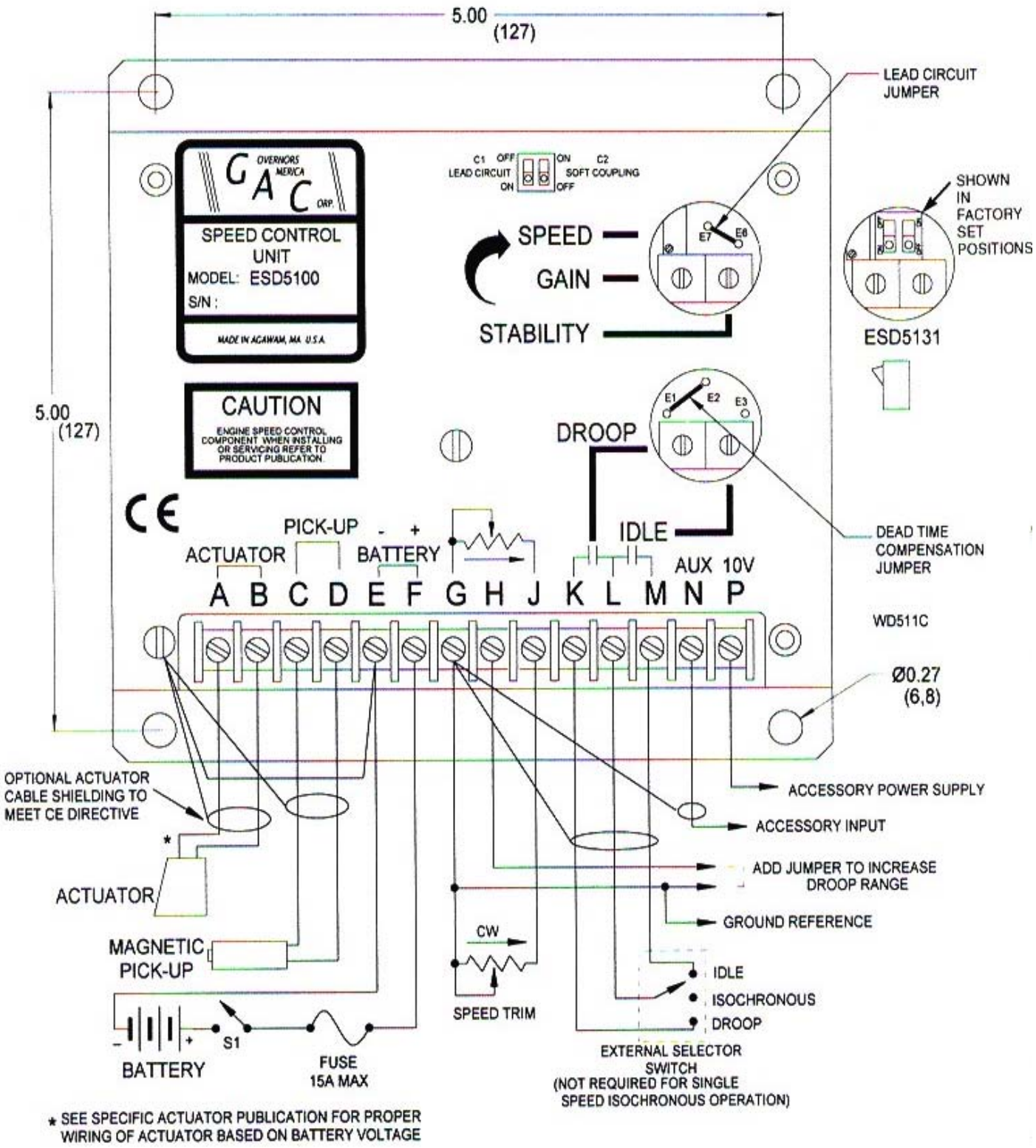

APPLICATION AND INSTALLATION INFORMATION

The speed control unit is rugged enough to be placed in a control cabinet or engine mounted enclosure with other dedicated control equipment. If water, mist, or condensation may come in contact with the controller, it should be mounted vertically. This will allow the fluid to drain away from the speed control unit.

Extreme heat should be avoided.

WARNING

An overspeed shutdown device, independent of the governor system, should be provided to prevent loss of engine control which may cause personal injury or equipment damage. Do not rely exclusively on the governor system electric actuator to prevent overspeed. A secondary shut off device, such as a fuel solenoid, must be used.

WIRING

Basic electrical connections are illustrated in Diagram 1. Actuator and battery connections to Terminals A, B, E and F should be #16 AWG (1.3 mm sq.) or larger. Long cables require an increased wire size to minimize voltage drops.

The battery positive (+) input, Terminal F, should be fused for 15 amps as illustrated. The ESD 5100 series is suitable for 12 VDC and 24 VDC operation.

Magnetic speed sensor connections to Terminals C and D **MUST BE TWISTED AND/OR SHIELDED** for their entire length. The speed sensor cable shield should ideally be connected as shown in Diagram 1. The shield should be insulated to insure no other part of the shield comes in contact with the engine ground, otherwise stray speed signals may be introduced into the speed control unit. With the engine stopped, adjust the gap between the magnetic speed sensor and the ring gear teeth. The gap should not be any smaller than 0.020 in. (0.45 mm). Usually, backing out the speed sensor 3/4 turn after touching the ring gear tooth will achieve a satisfactory air gap. The magnetic speed sensor voltage should be at least 1 VAC RMS during cranking.

ADJUSTMENTS

Before Starting Engine

Check to insure the **GAIN** and **STABILITY** adjustments, and if applied, the external **SPEED TRIM CONTROL** are set to mid position.

Start Engine

The speed control unit governed speed setting is factory set at approximately engine idle speed. (1000 Hz. speed sensor signal)

Crank the engine with DC power applied to the governor system. The actuator will energize to the maximum fuel position until the engine starts. The governor system should control the engine at a low idle speed. If the engine is unstable after starting, turn the **GAIN** and **STABILITY** adjustments counterclockwise until the engine is stable.

Governor Speed Setting

The governed speed set point is increased by clockwise rotation of the **SPEED** adjustment control. Remote speed adjustment can be obtained with an optional Speed Trim Control.
(See Diagram 1)

Governor Performance

Once the engine is at operating speed and at no load, the following governor performance adjustment can be made.

A. Rotate the **GAIN** adjustment clockwise until instability develops. Gradually move the adjustment counterclockwise until stability returns. Move the adjustment one division further counterclockwise to insure stable performance.

B. Rotate the **STABILITY** adjustment clockwise until instability develops. Gradually move the adjustment counterclockwise until stability returns. Move the adjustment one division further counterclockwise to insure stable performance.

C. Gain and stability adjustments may require minor changes after engine load is applied. Normally, adjustments made at no load achieve satisfactory performance. A strip chart recorder can be used to further optimize the adjustments.

If instability cannot be corrected or further performance improvements are required, refer to section on **SYSTEM TROUBLESHOOTING.** In this section, information can be found regarding troubleshooting procedures as well as instructions on adjusting the DIP switch positions of the ESD5131.

Idle Speed Setting

After the governor speed setting has been adjusted, place the optional external selector switch in the **IDLE** position. The idle speed set point is increased by clockwise rotation of the **IDLE** adjustment control. When the engine is at idle speed, the speed control unit applies droop to the governor system to insure stable operation.

Speed Droop Operation

Droop is typically used for the paralleling of engine driven generators.

Place the optional external selector switch in the **DROOP** position. Droop is increased by clockwise rotation of the **DROOP** adjustment control. When in droop operation, the engine speed will decrease as engine load increases. The percentage of droop is based on the actuator current change from engine no load to full load. A wide range of droop is available with the internal control. If more droop is required, a jumper between Terminals G and H can be added to double the droop available. Droop level requirements above 10% are unusual.

If droop levels experienced are higher or lower than those required, contact the factory for assistance.

After the droop level has been adjusted, the rated engine speed setting may need to be reset. Check the engine speed and adjust the speed setting accordingly.

Katolight Service - Master Repair Manual - Page 2785

Accessory Input

The **AUX**iliary Terminal N accepts input signals from load sharing units, auto synchronizers, and other governor system accessories. GAC accessories are directly connected to this terminal. It is recommended that this connection from accessories be shielded as it is a sensitive input terminal.

If the auto synchronizer is used alone, not in conjunction with a load sharing module, a 3 M ohm resistor should be connected between Terminals N and P. This is required to match the voltage levels between the speed control unit and the synchronizer.

When an accessory is connected to Terminal N, the speed will decrease and the speed adjustment must be reset.

When operating in the upper end of the control unit frequency range, a jumper wire or frequency trim control may be required between Terminals G and J. This increases the frequency range of the speed control to over 7000 Hz.

Accessory Supply

The + 10 volt regulated supply, Terminal P, can be utilized to provide power to GAC governor system accessories. Up to 20 ma of current can be drawn from this supply. Ground reference is Terminal G. Caution — a short circuit on this terminal can damage the speed control unit.

Wide Range Remote Variable Speed Operation

Simple and effective remote variable speed can be obtained with the ESD5100 Series speed control unit.

A single remote speed adjustment potentiometer can be used to adjust the engine speed continuously over a specific speed range. Select the desired speed range and the corresponding potentiometer value. (Refer to TABLE 1.) If the exact range cannot be found, select the next higher range potentiometer. An additional fixed resistor may be placed across the potentiometer to obtain the exact desired range. Connect the speed range potentiometer as shown in Diagram 2.

To maintain engine stability at the minimum speed setting, a small amount of droop can be added using the **DROOP** adjustment. At the maximum speed setting the governor performance will be near isochronous, regardless of the droop adjustment setting.

Contact the factory for assistance if difficulty is experienced in obtaining the desired variable speed governing performance.

TABLE 1

VARIABLE SPEED RANGE POTENTIOMETER VALUE

Speed Range	Potentiometer Value
900 Hz.	1K
2,400 Hz.	5K
3,000 Hz.	10K
3,500 Hz.	25K
3,700 Hz.	50K

DIAGRAM 2

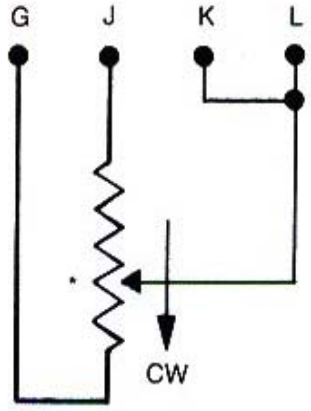

*Select Proper Potentiometer Value From Table 1

Katolight Service - Master Repair Manual - Page 2786

SYSTEM TROUBLESHOOTING

System Inoperative

If the engine governing system does not function, the fault may be determined by performing the voltage tests described in Steps 1, 2, 3, and 4, (+) and (−) refer to meter polarity. Should normal values be indicated as a result of following the troubleshooting steps, the fault may be with the actuator or the wiring to the actuator. See specific actuator publication for testing details.

Step	Terminals	Normal Reading	Probable Cause of Abnormal Reading
1	F(+) & E(−)	Battery Supply Voltage (12 or 24VDC)	1. DC battery power not connected. Check for blown fuse. 2. Low battery voltage. 3. Wiring error.
2	C & D	1.0 VAC RMS min., while cranking	1. Gap between speed sensor and gear teeth too great. Check gap. 2. Improper or defective wiring to the speed sensor. Resistance between Terminals C and D should be 30 to 1200 ohms. 3. Defective speed sensor.
3	P(+) & G(−)	10 VDC, Internal Supply	1. Short on Terminal P. (This will cause a defective unit.) 2. Defective speed control.
4	F(+) & A(−)	1.0 - 2.0 VDC while cranking	1. **SPEED** adjustment set too low. 2. Short/open in actuator wiring. 3. Defective speed control. 4. Defective actuator. See Actuator Troubleshooting.

Unsatisfactory Performance

If the governing system functions poorly, perform the following tests.

Symptom	Test	Probable Fault
Engine overspeeds	1. Do Not Crank. Apply DC power to the governor system.	1. Actuator goes to full fuel. Then, Disconnect speed sensor at Terminals C & D. If actuator still at full fuel - speed control unit defective. If actuator at minimum fuel position - erroneous speed signal. Check speed sensor cable.
	2. Manually hold the engine at the desired running speed. Measure the DC voltage between Terminals A (-) & F (+) on the speed control unit	1. If the voltage reading is 1.0 to 2.0 VDC, a) **SPEED** adjustment set above desired speed. b) Defective speed control unit. 2. If the voltage reading is above 2.0 VDC, a) Actuator or linkage binding. 3. If the voltage reading is below 1.0 VDC, a) Defective speed control unit 4. Gain set too low
Actuator does not energize fully	1. Measure the voltage at the battery while cranking.	1. If the voltage is less than 7V for a 12V system, or 14V for a 24V system, replace the battery if it is weak or undersized.
	2. Momentarily connect Terminals A and F. The actuator should move to the full fuel position.	1. Actuator or battery wiring in error. 2. Actuator or linkage binding. 3. Defective actuator. See actuator troubleshooting. 4. Fuse opens. Check for short in actuator or actuator wiring harness.
Engine remains below desired governed speed.	1. Measure the actuator output, Terminals A & B, while running under governor control.	1. If voltage measurement is within approximately 2 volts of the battery supply voltage, then fuel control restricted from reaching full fuel position. Possibly due to interference from the mechanical governor, carburetor spring or linkage alignment. 2. Speed setting too low.

Katolight Service - Master Repair Manual - Page 2787

Insufficient Magnetic Speed Sensor Signal

A strong magnetic speed sensor signal will eliminate the possibility of missed or extra pulses. The speed control unit will govern well with 0.5 volts RMS speed sensor signal. A speed sensor signal of 3 volts RMS or greater at governed speed is recommended. Measurement of the signal is made at Terminals C and D.

The amplitude of the speed sensor signal can be raised by reducing the gap between the speed sensor tip and the engine ring gear. The gap should not be any smaller than 0.020 in. (0.45 mm). When the engine is stopped, back the speed sensor out by 3/4 turn after touching the ring gear tooth to achieve a satisfactory air gap.

Electromagnetic Compatility (EMC)

EMI SUSCEPTIBILITY — The governor system can be adversely affected by large interfering signals that are conducted through the cabling or through direct radiation into the control circuits.

All GAC speed control units contain filters and shielding designed to protect the units sensitive circuits from moderate external interfering sources.

Although it is difficult to predict levels of interference, applications that include magnetos, solid state ignition systems, radio transmitters, voltage regulators or battery chargers; should be considered suspect as possible interfering sources.

If it is suspected that external fields either those that are radiated or conducted, are or will affect the governor systems operation; it is recommended to use shielded cable for all external connections. Be sure that only one end of the shields including the speed sensor shield, is connected to a single point on the case of the speed control unit. Mount the speed control unit to a gounded metal back plate or place it in a sealed metal box.

Radiation is when the interfering signal is radiated directly through space to the governing system. To isolate the governor system electronics from this type of interference source, a metal shield or a solid metal container is usually effective.

Conduction is when the interfering signal is conducted through the interconnecting wiring to the governor system electronics. Shielded cables and installing filters are common remedies.

As an aid to help reduce the levels of EMI of a conductive nature, a battery line filter and shielded cables is conveniently supplied by GAC in KT310. To reduce the levels of EMI of a radiated nature, a shielded container P/N CA114 can be sourced from GAC and its distributors.

In severe high energy interference locations such as when the governor system is directly in the field of a powerful transmitting source, the shielding may require to be a special EMI class shielding. For these conditions, contact GAC application engineering for specific recommendations.

Instability

Instability in a closed loop speed control system can be categorized into two general types. **PERIODIC** appears to be sinusoidal and at a regular rate. **NON-PERIODIC** is a random wandering or an occasional deviation from a steady state band for no apparent reason.

The ESD5131 Speed Control Unit was derived from the standard GAC ESD5111 Speed Control Unit. All specifications, installation procedures, and adjustments, except those noted below are identical.

The difference between the ESD5131 and the ESD5111 lies in the two DIP switches located under the upper access hole.

Switch C1 replaces and functions as the E6 to E7 "Lead Circuit" jumper found in the ESD5111. The normal position is "ON", which is equivalent to having the jumper in place. Move the switch to the "OFF" position if there is fast instability in the system.

Switch C2 controls an additional circuit added in the ESD5131 that is designed to eliminate fast erratic governor behavior, caused by very soft or worn couplings in the drive train between the engine and generator. The normal position is "OFF". Move to the "ON" position if fast erratic engine behavior due to a soft coupling is experienced.

When switch C1 is in the "ON" position, and switch C2 is in the "OFF" position, the ESD5131 operates exactly like an ESD5111.

The **PERIODIC** type can be further classified as a fast or slow instability. Fast instability is a 3 Hz. or faster irregularity of the speed and is usually a jitter. Slow periodic instability is below 3 Hz., can be very slow, and is sometimes violent.

If fast instability occurs, this is typically the governor responding to engine firings. Raising the engine speed increases the frequency of instability and vice versa. If this is the case, cutting the jumper from E1 to E2 will reduce this tendency. In extreme cases, the removal of the E1 to E2 jumper may not take all the jitter out of the system. A second jumper, E6 to E7, may be removed to further stabilize the system. Post locations are illustrated in Diagram 1. Interference from powerful electrical signals can also be the cause. Turn off the battery chargers or other electrical equipment to see if the symptom disappears.

Slow instability can have many causes. Adjustment of the **GAIN** and **STABILITY** usually cures most situations by matching the speed control unit dynamics. If this is unsuccessful, the dead time compensation can be modified. Add a capacitor from posts **E2** to **E3** (negative on E2). Post locations are illustrated in Diagram 1. Start with 10 mfds. and increase until instability is eliminated. The control system can also be optimized for best performance by following this procedure.

If slow instability is unaffected by this procedure, evaluate the fuel system and engine performance. Check the fuel system linkage for binding, high friction, or poor linkage. Be sure to check linkage during engine operation. Also look at the engine fuel system. Irregularities with carburetion or fuel injection systems can change engine power even with a constant throttle setting. This can result in speed deviations beyond the control of the governor system. Adding a small amount of droop can help stabilize the system for troubleshooting.

NON-PERIODIC instability should respond to the **GAIN** control. If increasing the gain reduces the instability, then the problem is probably with the engine. Higher gain allows the governor to respond faster and correct for the disturbance. Look for engine misfirings, an erratic fuel system, or load changes on the engine generator set voltage regulator. If the throttle is slightly erratic, but performance is fast, removing the jumper from E6 to E7 will tend to steady the system.

If unsuccessful in solving instability, contact the factory for assistance.

GOVERNORS AMERICA CORP.
720 Silver St. • Agawam, MA 01001-2907, USA • (413) 786-5600
FAX (413) 786-5666
e-mail: info@governors-america.com
Internet: www.governors-america.com

GOVERNORS AMERICA CORP.

ENGINE GOVERNING SYSTEMS

ESD5500E SERIES

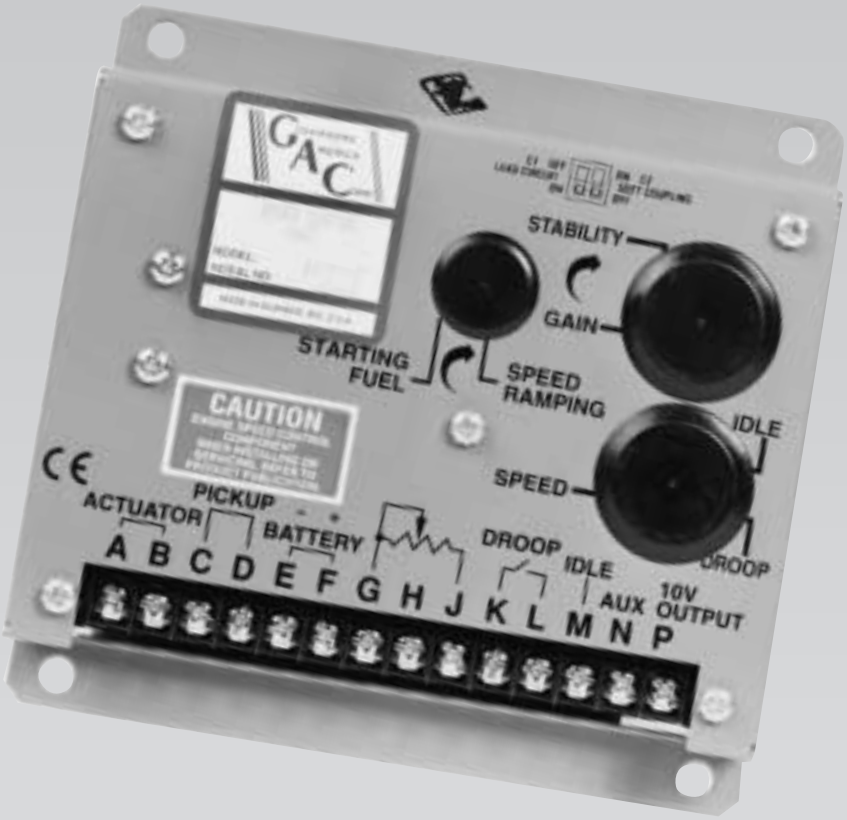

SPEED CONTROL UNIT

MEMBER
EGSA Electrical Generating Systems Association

GOVERNORS AMERICA CORP. • 720 Silver Street • Agawam, MA 01001-2907, USA

ESD5500E SERIES SPEED CONTROL UNIT

PRODUCT TECHNICAL INFORMATION

PTI 1002E

JUNE 2000

MPC

INTRODUCTION

The ESD5500E Series speed control unit is an all electronic device designed to control engine speed with fast and precise response to transient load changes. This closed loop control, when connected to a proportional electric actuator and supplied with a magnetic speed sensor signal, will control a wide variety of engines in an isochronous or droop mode. It is designed for high reliability and built ruggedly to withstand the engine environment.

Simplicity of installation and adjustment was foremost in the design. Non-interacting performance controls allow near optimum response to be easily obtained.

The primary features of the ESD5500E Series speed control unit are the engine STARTING FUEL and SPEED RAMPING adjustments. The use of these features will minimize engine exhaust smoke experienced prior to attaining engine operating speed.

Other features include adjustable droop and idle operation, inputs for accessories used in multi-engine or special applications, protection against reverse battery voltage, transient voltages, accidental short circuit of the actuator and fail safe design in the event of loss of speed sensor signal or battery supply.

The ESD5500E Series speed control unit is compatible with all GAC proportional actuators except the ACB2000 electric actuator. When the ESD5500E Series speed control unit is used with a ADC100 Series electric actuator, the DROOP adjustment range will be less due to this actuator's low current demand.

DESCRIPTION

Engine speed information for the speed control unit is usually received from a magnetic speed sensor. Any other signal generating device may be used provided the generated frequency is proportional to engine speed and meets the voltage input and frequency range specification. The speed sensor is typically mounted in close proximity to an engine driven ferrous gear, usually the engine ring gear. As the teeth of the gear pass the magnetic sensor, a signal is generated which is proportional to engine speed.

Signal strength must be within the range of the input amplifier. An amplitude of 0.5 to 120 volts RMS is required to allow the unit to function within its design specifications. The speed signal is applied to Terminals C and D of the speed control unit. Between these terminals there is an input impedance of over 33,000 ohms. Terminal D is internally connected to Terminal E, battery negative. Only one end of the shielded cable should be connected.

When a speed sensor signal is received by the controller, the signal is amplified and shaped by an internal circuit to provide an analog speed signal. If the speed sensor monitor does not detect a speed sensor signal, the output circuit of the speed control unit will turn off all current to the actuator.

A summing circuit receives the speed sensor signal along with the speed adjust set point input. The speed range has a ratio of 8:1 and is adjusted with a 25 turn potentiometer. The output from the summing circuit is the input to the dynamic control section of the speed control unit. The dynamic control circuit, of which the gain and stability adjustments are part, has a control function that will provide isochronous and stable performance for most engine types and fuel systems.

The speed control unit circuit is influenced by the gain and stability performance adjustments. The governor system sensitivity is increased with clockwise rotation of the gain adjustment. The gain adjustment has a range of 33:1. The stability adjustment, when advanced clockwise, increases the time rate of response of the governor system to match the various time constants of a wide variety of engines. The speed control unit is a P I D device, the “D”, derivative portion can be varied when required. (See Instability section.)

During the engine cranking cycle, STARTING FUEL can be adjusted from an almost closed, to a nearly full fuel position. Once the engine has started, the speed control point is determined, first by the IDLE speed set point and the SPEED RAMPING circuit. After engine speed ramping has been completed, the engine will be at its governed operating speed. At the desired governed engine speed, the actuator will be energized with sufficient current to maintain the desired engine speed, independent of load (isochronous operation).

The output circuit provides switching current at a frequency of about 500 Hz. to drive the actuator. Since the switching frequency is well beyond the natural frequency of the actuator, there is no visible motion of the actuator output shaft. Switching the output transistors reduces its internal power dissipation for efficient power control. The output circuit can provide current of up to 10 amps continuous at 25˚C for 12 and 24 VDC battery systems. The actuator responds to the average current to position the engine fuel control lever.

In standard operation, the speed control unit performance is isochronous. Droop governing can be selected by connecting terminals K and L and the percent of droop governing can be varied with the droop adjustment control. The droop range can be decreased by connecting Terminals G and H.

The speed control unit has several performance and protection features which enhance the governor system. A speed anticipation circuit minimizes speed overshoot on engine start-up or when large increments of load are applied to the engine. Engine idle speed can be remotely selected and is adjustable. Accessory inputs to achieve variable speed operation and multi-engine control can be accepted by the ESD5500E Series speed control unit from GAC load sharing modules, automatic synchronizers, ramp generators and other accessory engine control modules. Protection against reverse battery voltage and transient voltages is provided. The design is fail-safe in the event of loss of speed sensor signal or battery supply.

ESD 5500E SERIES SPEED CONTROL UNITS

ESD 5500E ..... Standard Unit ESD 5520E ..... Suitable for low inertia actuators

SPECIFICATIONS

PERFORMANCE

Isochronous Operation/Steady State Stability ..... ± 0.25% or better
Speed Range/Governor ..... 1K–7.5K Hz continuous
Speed Drift with Temperature ..... ± 1% Maximum
Idle Adjust CW ..... 60% of set speed
Idle Adjust CCW ..... Less than 1200 Hz.
Droop Range ..... 1 – 5% regulation*
Droop Adj. Max. (K-L Jumpered) ..... 400 Hz., ± 75 Hz. per 1.0 A change
Droop Adj. Min. (K-L Jumpered) ..... 15 Hz., ± 6 Hz. per 1.0 A change
Speed Trim Range ..... ± 200 Hz.
Remote Variable Speed Range ..... 500 – 7.5 Hz. or any part thereof
Terminal Sensitivity
- J ..... 100 Hz., ± 15 Hz / Volt @ 5.0 K Impedance
- L ..... 735 Hz., ± 60 Hz / Volt @ 65 K Impedance
- N ..... 148 Hz., ± 10 Hz / Volt @ 1 Meg. Impedance
- P ..... 10 VDC Supply @ 20 ma Max.

ENVIRONMENTAL

Ambient Operating Temperature Range ..... -40˚ to +180˚F (-40˚ to +85˚C)
Relative Humidity ..... up to 95%
All Surface Finishes ..... Fungus Proof and Corrosion Resistant

INPUT POWER

Supply ..... 12 or 24 VDC Battery Systems (Transient and Reverse Voltage Protected)**
Polarity ..... Negative Ground (Case Isolated)
Power Consumption ..... 50 ma continuous plus actuator current
Actuator Current Range @ 77°F (25°C) - (Inductive Load) ..... Min. 2.5 Amps ..... Max. 10 Amps continuous***
Speed Sensor Signal ..... 0.5–120 Volts RMS

RELIABILITY

Vibration ..... 1G @ 20–100 Hz.
Testing ..... 100% Functionally Tested

PHYSICAL

Dimensions ..... See Outline (FIGURE 1)
Weight ..... 1.2 lbs (545 grams)
Mounting ..... Any Position, Vertical Preferred

*Droop is based on a speed sensor frequency of 4000 Hz. and an actuator current change of 1 amp from no load to full load. Applications with higher speed sensor signals will experience less percentage of droop. Applications with more actuator current change will experience higher percentages of droop. See droop description for specific details on operation of droop ranges. When used with the ADC100 actuator the droop percentage will be less due to the actuators low current consumption.

**Protected against reverse voltage by a series diode. A 15 amp fuse must be installed in the positive battery lead.

***Protected against short circuit to actuator (shuts off current to actuator), unit automatically turns back on when short is removed.

DIAGRAM 1. ESD5500E Series Wiring Diagram and Outline

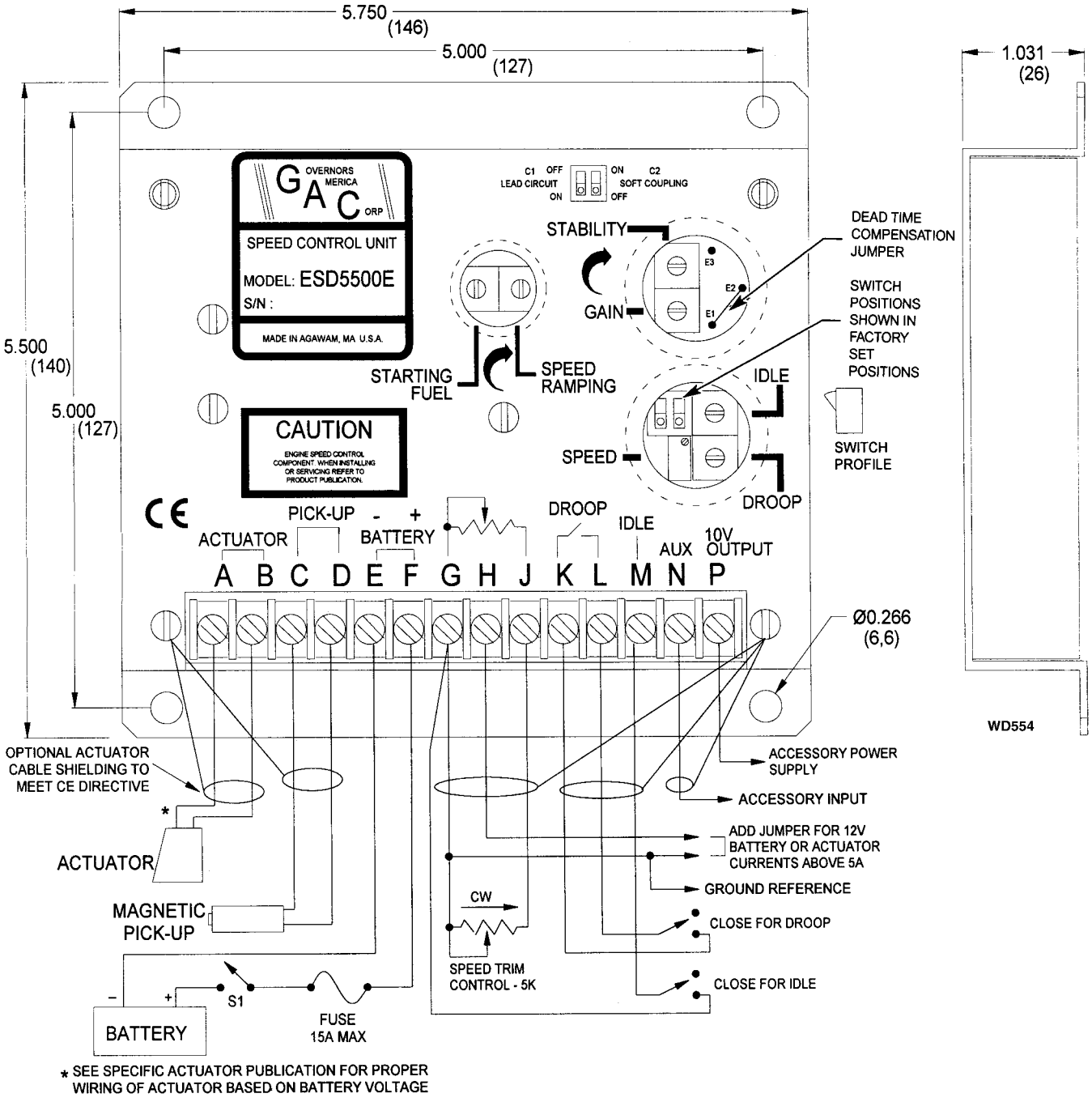

APPLICATION AND INSTALLATION INFORMATION

The speed control unit is rugged enough to be placed in a control cabinet or engine mounted enclosure with other dedicated control equipment. If water, mist, or condensation may come in contact with the controller, it should be mounted vertically. This will allow the fluid to drain away from the speed control unit.

Extreme heat should be avoided.

WARNING

An overspeed shutdown device, independent of the governor system, should be provided to prevent loss of engine control which may cause personal injury or equipment damage. Do not rely exclusively on the governor system electric actuator to prevent overspeed. A secondary shutoff device, such as a fuel solenoid must be used.

WIRING

Basic electrical connections are illustrated in Diagram 1. Actuator and battery connections to Terminals A, B, E, and F should be #16 AWG (1.3 mm sq.) or larger. Long cables require an increased wire size to minimize voltage drops.

The battery positive (+) input, Terminal F, should be fused for 15 amps as illustrated.

Magnetic speed sensor connections to Terminals C and D **MUST BE TWISTED AND/OR SHIELDED** for their entire length. The speed sensor cable shield should be ideally connected to terminal D. The shield should be insulated to insure no other part of the shield comes in contact with engine ground, otherwise stray speed signals may be introduced to the speed control unit. With the engine stopped, adjust the gap between the magnetic speed sensor and the ring gear teeth. The gap should not be any smaller than 0.020 in. (0.45 mm). Usually, backing out the speed sensor 3/4 turn after touching the ring gear tooth will achieve a satisfactory air gap. The magnetic speed sensor voltage should be at least 1 VAC RMS during cranking.

ADJUSTMENTS

Before Starting Engine

Check to insure the **GAIN** and **STABILITY** adjustments, and if applied, the external **SPEED TRIM CONTROL** are set to mid position.

Preset the ESD5500E as follows:

STARTING FUEL ..... FULL CW (Maximum Fuel)
SPEED RAMPING ..... FULL CCW (Fastest)

Start Engine

The speed control unit governed speed setting is factory set at approximately engine idle speed. (1000 Hz., speed sensor signal)

Crank the engine with DC power applied to the governor system. The actuator will energize to the maximum fuel position until the engine starts. The governor system should control the engine at a **low idle** speed. If the engine is unstable after starting, turn the **GAIN** and **STABILITY** adjustments counterclockwise until the engine is stable.

Governor Speed Setting

The governed speed set point is increased by clockwise rotation of the **SPEED** adjustment control. Remote speed adjustment can be obtained with an optional 5K Speed Trim Control. (See Diagram 1.)

Governor Performance

Once the engine is at operating speed and at no load, the following governor performance adjustment can be made.

A. Rotate the **GAIN** adjustment clockwise until instability develops. Gradually move the adjustment counterclockwise until stability returns. Move the adjustment one division further counterclockwise to insure stable performance.

B. Rotate the **STABILITY** adjustment clockwise until instability develops. Gradually move the adjustment counterclockwise until stability returns. Move the adjustment one division further to insure stable performance.

C. Gain and stability adjustments may require minor changes after engine load is applied. Normally, adjustments made at no load achieve satisfactory performance. A strip chart recorder can be used to further optimize the adjustments.

If instability cannot be corrected or further performance improvements are required, refer to the section on **SYSTEM TROUBLESHOOTING**.

Starting Fuel Adjustment

The engine's exhaust smoke at start-up can be minimized by completing the following adjustments.

1. Place the engine in idle by connecting Terminals M & G.

2. Adjust the **IDLE** speed for as low a speed setting as the application allows.

3. Adjust the **STARTING FUEL CCW** until the engine speed begins to fall. Increase the **STARTING FUEL** slightly so that the idle speed is returned to the desired level.

4. Stop the engine.

One of two methods of operation for the ESD5500E may now be selected.

Method 1: Start the engine and accelerate directly to the operating speed (Gen Sets, etc.).

or

Method 2: Start the engine and control at an idle speed for a period of time prior to accelerating to the operating speed. This method separates the starting process so that each may be optimized for the lowest smoke emissions.

Method 1

Remove the connection between Terminals M & G. Start the engine and adjust the **SPEED RAMPING** for the least smoke on acceleration from idle to rated speed. If the starting smoke is excessive, the STARTING FUEL may need to be adjusted slightly CCW. If the starting time is too long, the STARTING FUEL may need to be adjusted slightly CW.

Method 2

Replace the connection between Terminals M & G with a switch, usually an oil pressure switch. Start the engine. If the starting smoke is excessive, the STARTING FUEL may need to be adjusted slightly CCW. If the starting time is too long, the STARTING FUEL may need to be adjusted slightly CW.

When the switch opens, adjust the SPEED RAMPING for the least amount of smoke when accelerating from idle speed to rated speed.

Idle Speed Setting

If the IDLE speed setting was not adjusted as detailed in "Starting Fuel Adjustment" section, then place the optional external selector switch in the IDLE position. The idle speed set point is increased by clockwise rotation of the IDLE adjustment control. When the engine is at idle speed, the speed control unit applies droop to the governor system to insure stable operation.

Speed Droop Operation

Droop is typically used for the paralleling of engine driven generators.

Place the optional external selector switch in the DROOP position, DROOP is increased by clockwise rotation of the DROOP adjustment control. When in droop operation, the engine speed will decrease as engine load increases. The percentage of droop is based on the actuator current change from engine no load to full load. A wide range of droop is available with the internal control. Droop level requirements above 10% are unusual.

If droop levels experienced are higher or lower than those required, contact the factory for assistance.

After the droop level has been adjusted, the rated engine speed setting may need to be reset. Check the engine speed and adjust the speed setting accordingly.

Accessory Input

The **AUX**ilary Terminal N accepts input signals from load sharing units, auto synchronizers, and other governor system accessories, GAC accessories are directly connected to this terminal. It is recommended that this connection from accessories be shielded as it is a sensitive input terminal.

If the auto synchronizer is used alone, not in conjunction with a load sharing module, a 3 M ohm resistor should be connected between Terminals N and P. This is required to match the voltage levels between the speed control unit and the synchronizer.

When an accessory is connected to Terminal N, the speed will decrease and the speed adjustment must be reset.

When operating in the upper end of the control unit frequency range, a jumper wire or frequency trim control may be required between Terminals G and J. This increases the frequency range of the speed control to over 7000 Hz.

Accessory Supply

The + 10 volt regulated supply, Terminal P, can be utilized to provide power to GAC governor system accessories. Up to 20 ma of current can be drawn from this supply. Ground reference is Terminal G. **Caution:** a short circuit on this terminal can damage the speed control unit.

Wide Range Remote Variable Speed Operation

Simple and effective remote variable speed can be obtained with the ESD5500E Series control unit.

A single remote speed adjustment potentiometer can be used to adjust the engine speed continuously over a specific speed range. Select the desired speed range and the corresponding potentiometer value. (Refer to TABLE 1.) If the exact range cannot be found, select the next higher range potentiometer. An additional fixed resistor may be placed across the potentiometer to obtain the exact desired range. Connect the speed range potentiometer as shown in Diagram 2.

To maintain engine stability at the minimum speed setting, a small amount of droop can be added using the DROOP adjustment. At the maximum speed setting the governor performance will be near isochronous, regardless of the droop adjustment setting.

Contact the factory for assistance if difficulty is experienced in obtaining the desired variable speed governing performance.

TABLE 1. Variable Speed Range Potentiometer Value

Speed Range	Potentiometer Value
900 Hz.	1K
2,400 Hz.	5K
3,000 Hz.	10K
3,500 Hz.	25K
3,700 Hz.	50K

DIAGRAM 2.

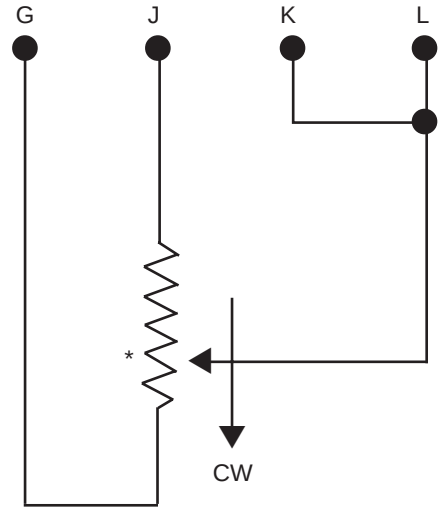

*Select Proper Potentiometer Value from Table 1.

SYSTEM TROUBLESHOOTING

SYSTEM INOPERATIVE

If the engine governing system does not function, the fault may be determined by performing the voltage tests described in Steps 1, 2, 3, and 4. (+) and (-) refer to meter polarity. Should normal values be indicated as a result of following the trouble shooting steps, the fault may be with the actuator or the wiring to the actuator. See the actuator publication for testing details.

STEP	TERMINALS	NORMAL READING	PROBABLE CAUSE OF ABNORMAL READING
1	F(+) & E(-)	Battery Supply Voltage (12 or 24 VDC)	1. DC battery power not connected. Check for blown fuse. 2. Low battery voltage. 3. Wiring error.
2	C & D	1.0 VAC RMS min., while cranking	1. Gap between speed sensor and gear teeth too great. Check gap. 2. Improper or defective wiring to the speed sensor. Resistance between terminals C and D should be 30 to 1200ohms. 3. Defective speed sensor.
3	P(+) & G(-)	10 VDC, Internal Supply	1. Short on terminal P. (This will cause a defective unit.) 2. Defective Speed Control.
4	F(+) & A(-)	1.0 - 2.0 VDC while cranking	1. **SPEED** adjustment set too low. 2. Short/open in actuator wiring. 3. Defective speed control. 4. Defective actuator. See Actuator Troubleshooting.

UNSATISFACTORY PERFORMANCE

If the governing system functions poorly, perform the following tests.

SYMPTOM	TEST	PROBABLE FAULT
Engine overspeeds	1. **Do not crank.** Apply DC power to the governor system	1. Actuator goes to full fuel. Then, disconnect speed sensor at Terminals C & D. If actuator still at full fuel – speed control unit defective. If actuator at minimum fuel position - erroneous speed signal. Check speed sensor data.
	2. Manually hold the engine at the desired running speed. Measure the DC voltage between Terminals A (-) & F(+) on the speed control unit.	1. If the voltage reading is 1.0 to 2.0 VDC, a) **SPEED** adjustment set above desired speed. b) Defective speed control unit. 2. If the voltage reading is above 2.0 VDC, a) Actuator or linkage binding. 3. If the voltage reading is below 1.0 VDC, a) Defective speed control unit. 4. Gain set too low.
Actuator does not energize fully.	1. Measure the voltage at the battery while cranking.	1. If the voltage is less than 7V for a 12V system, or 14V for a 24V system, replace the battery if it is weak or undersized.
	2. Momentarily connect Terminals A and F. The actuator should move to the full fuel position.	1. Actuator or battery wiring in error. 2. Actuator or linkage binding. 3. Defective actuator. See actuator troubleshooting. 4. Fuse opens. Check for short in actuator or actuator wiring harness.
Engine remains below desired governed speed.	1. Measure the actuator output. Terminals A & B, while running under governor control.	1. If voltage measurement is within approximately 2 volts of the battery supply voltage, then fuel control restricted from reaching full fuel position. Possibly due to interference from the mechanical governor, carburetor spring or linkage alignment. 2. Speed setting too low.

SYSTEM TROUBLESHOOTING

Insufficient Magnetic Speed Sensor Signal

A strong magnetic speed sensor signal will eliminate the possibility of missed or extra pulses. The speed control unit will govern well with 0.5 volts RMS speed sensor signal. A speed sensor signal of 3 volts RMS or greater at governed speed is recommended. Measurement of the signal is made at Terminals C and D.

The amplitude of the speed sensor signal can be raised by reducing the gap between the speed sensor tip and the engine rind gear. The gap should not be any smaller than 0.020 in (0.45 mm). When the engine is stopped, back the speed sensor out by 3/4 turn after touching the ring gear tooth to achieve a satisfactory air gap.

Electromagnetic Compatibility (EMC)

EMI SUSCEPTIBILITY – The governor system can be adversely affected by large interfering signals that are conducted through the cabling or through direct radiation into the control circuits.

All GAC speed control units contain filters and shielding designed to protect the units sensitive circuits from moderate external interfering sources.

Although it is difficult to predict levels of interference, applications that include magnetos, solid state ignition systems, radio transmitters, voltage regulators or battery chargers should be considered suspect as possible interfering sources.

If it is suspected that external fields, either those that are radiated or conducted, are or will affect the governor systems operation, it is recommended to use shielded cable for all external connections. Be sure that only one end of the shields, including the speed sensor shield, is connected to a single point on the case of the speed control unit. Mount the speed control unit to a grounded metal back plate or place it in a sealed metal box.

Radiation is when the interfering signal is radiated directly through space to the governing system. To isolate the governor system electronics from this type of interference source, a metal shield or a solid metal container is usually effective.

Conduction is when the interfering signal is conducted through the interconnecting wiring to the governor system electronics. Shielded cables and installing filters are common remedies.

As an aid to help reduce the levels of EMI of a conductive nature, a battery line filter and shielded cables are conveniently supplied by GAC in KT130. To reduce the levels of EMI of a radiated nature, a shielded container P/N CA114 can be sourced from GAC and its distributors.

In severe high energy interference locations such as when the governor system is directly in the field of a powerful transmitting source, the shielding may require to be a special EMI class shielding. For these conditions, contact GAC application engineering for specific recommendations.

Instability

Instability in a closed loop speed control system can be categorized into two general types. **PERIODIC** appears to be sinusoidal and at a regular rate. **NON-PERIODIC** is a random wandering or an occasional deviation from a steady state band for no apparent reason.

Switch C1 controls the “Lead Circuit” found in the ESD5500. The normal position is “ON.” Move the switch to the “OFF” position if there is fast instability in the system.

Switch C2 controls an additional circuit added in the ESD5500 that is designed to eliminate fast erratic governor behavior, caused by very soft or worn couplings in the drive train between the engine and generator. The normal position is “OFF.” Move to the “ON” position if fast erratic engine behavior due to a soft coupling is experienced.

The **PERIODIC** type can be further classified as fast or slow instability. Fast instability is a 3 Hz. or faster irregularity of the speed and is usually a jitter. Slow periodic instability is below 3 Hz., can be very slow, and is sometimes violent.

If fast instability occurs, this is typically the governor responding to engine firings. Raising the engine speed increases the frequency of instability and vice versa. In this case, placing switch C1 in the “OFF” position will reduce the speed control unit’s sensitivity to high frequency signals. Readjust the GAIN and STABILITY for optimum control. Should instability still be present, the removal of E1 to E2 jumper may help stabilize the engine. Post locations are illustrated in Diagram 1. Again, readjust the GAIN and STABILITY for optimum control. Interference from powerful electrical signals can also be the cause. Turn off the battery chargers or other electrical equipment to see if the system disappears.

Slow instability can have many causes. Adjustment of the **GAIN** and **STABILITY** usually cures most situations by matching the speed control unit dynamics. If this is unsuccessful, the dead time compensation can be modified. Add a capacitor from posts E2 to E3 (negative on E2). Post locations are illustrated in Diagram 1. Start with 10 mfds. and increase until instability is eliminated. The control system can also be optimized for best performance by following this procedure.

If slow instability is unaffected by this procedure, evaluate the fuel system and engine performance. Check the fuel system linkage for binding, high friction, or poor linkage. Be sure to check linkage during engine operation. Also look at the engine fuel system. Irregularities with carburetion or fuel injection systems can change engine power with a constant throttle setting. This can result in speed deviations beyond the control of the governor system. Adding a small amount of droop can help stabilize the system for troubleshooting.

NON-PERIODIC instability should respond to the **GAIN** control. If increasing the gain reduces the instability, then the problem is probably with the engine. Higher gain allows the governor to respond faster and correct for disturbance. Look for engine misfirings, an erratic fuel system, or load changes on the engine generator set voltage regulator. If the throttle is slightly erratic, but performance is fast, move switch C1 to the “OFF” position. This will tend to steady the system.

If unsuccessful in solving instability, contact the factory for assistance.

GOVERNORS AMERICA CORP.

720 Silver Street • Agawam, MA 01001-2907, USA • (413) 786-5600

FAX (413) 786-5666

e-mail: info@governors-america.com

Internet: www.governors-america.com

WOODWARD

Installation and Operation Manual



Flo-Tech™
Integrated Actuator and Throttle Body

Flo-Tech 33/45/60/68/75

Manual 04141F

WARNING

Read this entire manual and all other publications pertaining to the work to be performed before installing, operating, or servicing this equipment. Practice all plant and safety instructions and precautions. Failure to follow instructions can cause personal injury and/or property damage.

The engine, turbine, or other type of prime mover should be equipped with an overspeed shutdown device to protect against runaway or damage to the prime mover with possible personal injury, loss of life, or property damage.

The overspeed shutdown device must be totally independent of the prime mover control system. An overtemperature or overpressure shutdown device may also be needed for safety, as appropriate.

CAUTION

To prevent damage to a control system that uses an alternator or battery-charging device, make sure the charging device is turned off before disconnecting the battery from the system.

Electronic controls contain static-sensitive parts. Observe the following precautions to prevent damage to these parts.

- **Discharge body static before handling the control (with power to the control turned off, contact a grounded surface and maintain contact while handling the control).**
- **Avoid all plastic, vinyl, and Styrofoam (except antistatic versions) around printed circuit boards.**
- **Do not touch the components or conductors on a printed circuit board with your hands or with conductive devices.**

IMPORTANT DEFINITIONS

WARNING—indicates a potentially hazardous situation which, if not avoided, could result in death or serious injury.

CAUTION—indicates a potentially hazardous situation which, if not avoided, could result in damage to equipment.

NOTE—provides other helpful information that does not fall under the warning or caution categories.

Revisions—Text changes are indicated by a black line alongside the text.

Woodward Governor Company reserves the right to update any portion of this publication at any time. Information provided by Woodward Governor Company is believed to be correct and reliable. However, no responsibility is assumed by Woodward Governor Company unless otherwise expressly undertaken.

© Woodward 1995
All Rights Reserved

Contents

CHAPTER 1. INSTALLATION AND OPERATION 1
General Information 1
Application 1
Installation 1

CHAPTER 2. SERVICE OPTIONS 13
Product Service Options 13
Returning Equipment for Repair 14
Replacement Parts 15
How to Contact Woodward 15
Engineering Services 16
Technical Assistance 17

FLO-TECH™ CONTROL SPECIFICATIONS 19

Illustrations and Tables

Figure 1-1a. Bendix Round Connector 2
Figure 1-1b. Deutsch Connector 2
Figure 1-1c. Packard 5-wire Connector 3
Figure 1-1d. Packard 6-wire Connector 3
Figure 1-1e. Packard 6-wire 0–5 Vdc Connector 4
Figure 1-2a. Flo-Tech Outline Drawing (No Flange Mounting) 5
Figure 1-2b. Flo-Tech Outline Drawing (Standard Flange Mounting) 6
Figure 1-2c. Flo-Tech Outline Drawing (Thick Flange Mounting) 7
Figure 1-2d. Flo-Tech Outline Drawing (M10 Flange Mounting) 8
Figure 1-2e. Flo-Tech Outline Drawing (O-ring Flange Mounting) 9
Figure 1-2f. Flo-Tech Outline Drawing (75 mm Flange Mounting) 10
Figure 1-2g. Flo-Tech Outline Drawing (Top Slotted Flange Mounting) 11
Figure 1-2h. Flo-Tech Outline Drawing (Bottom Slotted Flange Mounting) 12

Katolight Service - Master Repair Manual - Page 2799

Katolight Service - Master Repair Manual - Page 2800

Chapter 1.
Installation and Operation

General Information

The Flo-Tech™ actuator/throttle body is a family of electrically-actuated throttle/valves which control fuel flow output. The flow output is a function of throttle position. The throttle position responds proportionally to the position command.

The Flo-Tech throttle body is available with 33, 48, 60, 68, and 75 mm bore sizes for various applications. Command input options come in PWM (pulse-width-modulated), 0–5 Vdc, 4–20 mA, and 0–200 mA. The position feedback output signal will vary from 0.5 ± 0.1 Vdc at minimum actuator position to 4.5 ± 0.1 Vdc nominal at maximum actuator position. The PWM command input version will return to minimum actuator position with a command of greater than 96% duty cycle.

Input Command	Input Range	Position Feedback Output	Nominal Actuator Range
PWM	10–90%	0.5–4.5 ± 0.1 Vdc	0–70 degrees
0–5 Vdc	0.5–4.5 Vdc	0.5–4.5 ± 0.1 Vdc	0–70 degrees
4–20 mA	5–19 mA	0.5–4.5 ± 0.1 Vdc	0–70 degrees
0–200 mA	20–180 mA	0.5–4.5 ± 0.1 Vdc	0–70 degrees

The Flo-Tech actuator requires a power supply of 9–32 Vdc. The supply must be capable of providing a sustained 25 W at steady-state and 50 W for transient state conditions for at least 0.25 seconds.

Application

The Flo-Tech throttle body is designed with flow shaping to assist in engine idle stability. The system will provide equivalent maximum flow rate. The system contains a return spring to fully comply with DOT 571.124 specifications.

The Flo-Tech throttle body is designed for direct replacement of manual throttle bodies. It requires no actuators or linkage.

Installation

The Flo-Tech actuator/throttle body may be engine-mounted in any position, in the coolest location possible. Each of the two mounting flanges on the body of the bore has four 10 mm through-mounting holes in a square 74 mm pattern. The base of the Flo-Tech throttle body has an optional bolt pattern that can be used for mounting or support. It uses four M8x0.125 bolts in an 88.9 mm square pattern. Flo-Tech connector options are shown in Figure 1-1. Outline drawings shown in Figure 1-2 describe the different Flo-Tech mounting configurations.

Katolight Service - Master Repair Manual - Page 2801

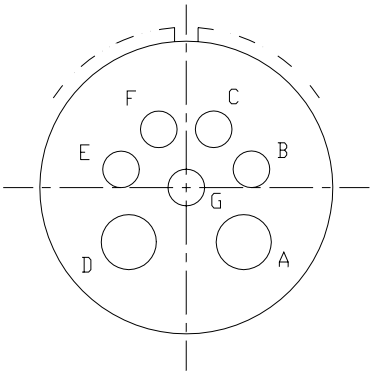

CONNECTOR WIRING

FRONT VIEW

PIN A: POWER (+) / RED
PIN B: POSITION COMMAND (-) / BLUE
PIN C: POSITION COMMAND (+) / ORANGE
PIN D: POWER (-) / BLACK
PIN E: POSITION FEEDBACK / WHITE
PIN F: NO CONNECTION
PIN G: NO CONNECTION

MAY BE PURCHASED FROM:

1. ITT CANNON
   P/N: CA3101F-18-9P-A206

2. AMPHENOL BENDIX
   P/N: ACS01AF18-9P(025)

MATING CONNECTOR MAY BE PURCHASED FROM:

1. ITT CANNON
   P/N CA3106F-18-9S-A206

2. AMPHENOL BENDIX
   P/N ACS06AF18-9S(025)

041-308
04-2-4

Figure 1-1a. Bendix Round Connector

NOTES:
6 PIN DEUTSCH CONNECTOR

CONNECTOR PART #: DT04-6P-EP04
WGC P/N 1634-177
CONTACT PIN #: 0460-202-16141
WGC P/N 1634-003
LOCK WEDGE #: W6P
WGC P/N 1634-963
SEALING PLUG #: 114017
WGC P/N 1635-117

MATING CONNECTOR REF INFO:
CONNECTOR: DT06-6S-EP04
WGC P/N: 1634-179
CONTACT SOCKET: 0462-201-16141
WGC P/N: 1634-005
LOCK WEDGE: W6S
WGC P/N: 1634-965
SEALING PLUG: 114017
WGC P/N: 1635-117

1	POWER (+) / RED
2	POWER (-) / BLACK
3	POSITION COMMAND / BLUE WIRE
4	POSITION FEEDBACK / WHITE WIRE
5	NOT USED
6	POSITION COMMAND / ORANGE

041-312
04-2-4

Figure 1-1b. Deutsch Connector

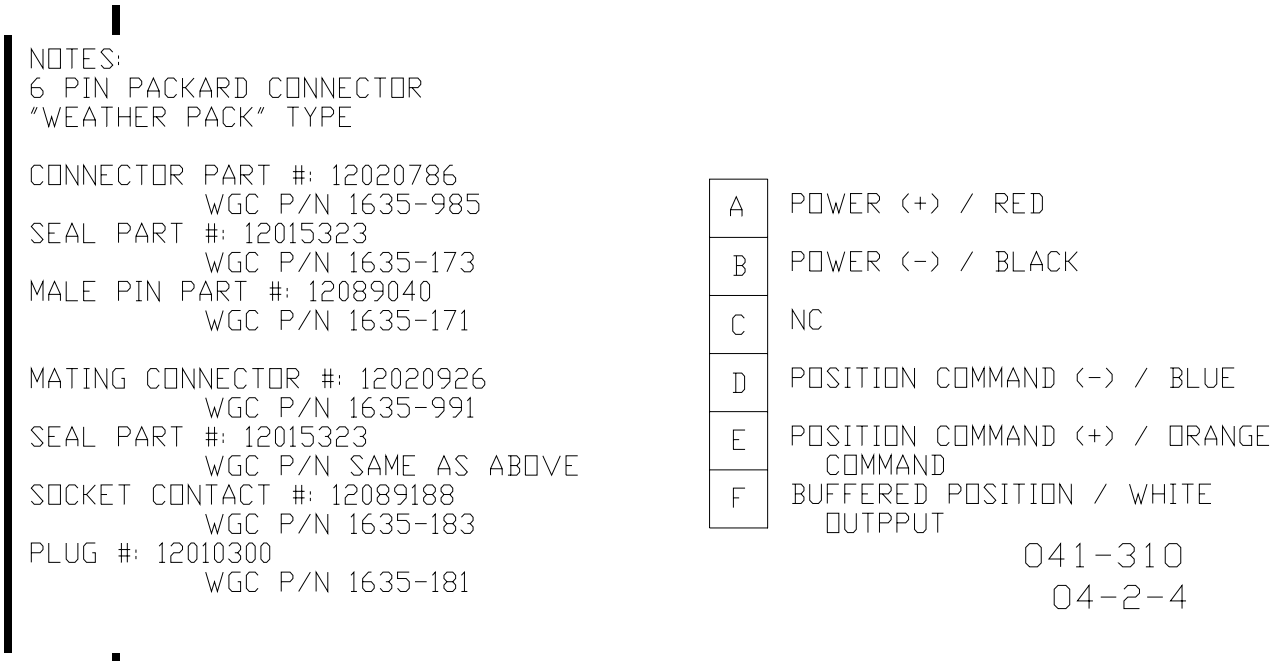

Figure 1-1c. Packard 5-wire Connector

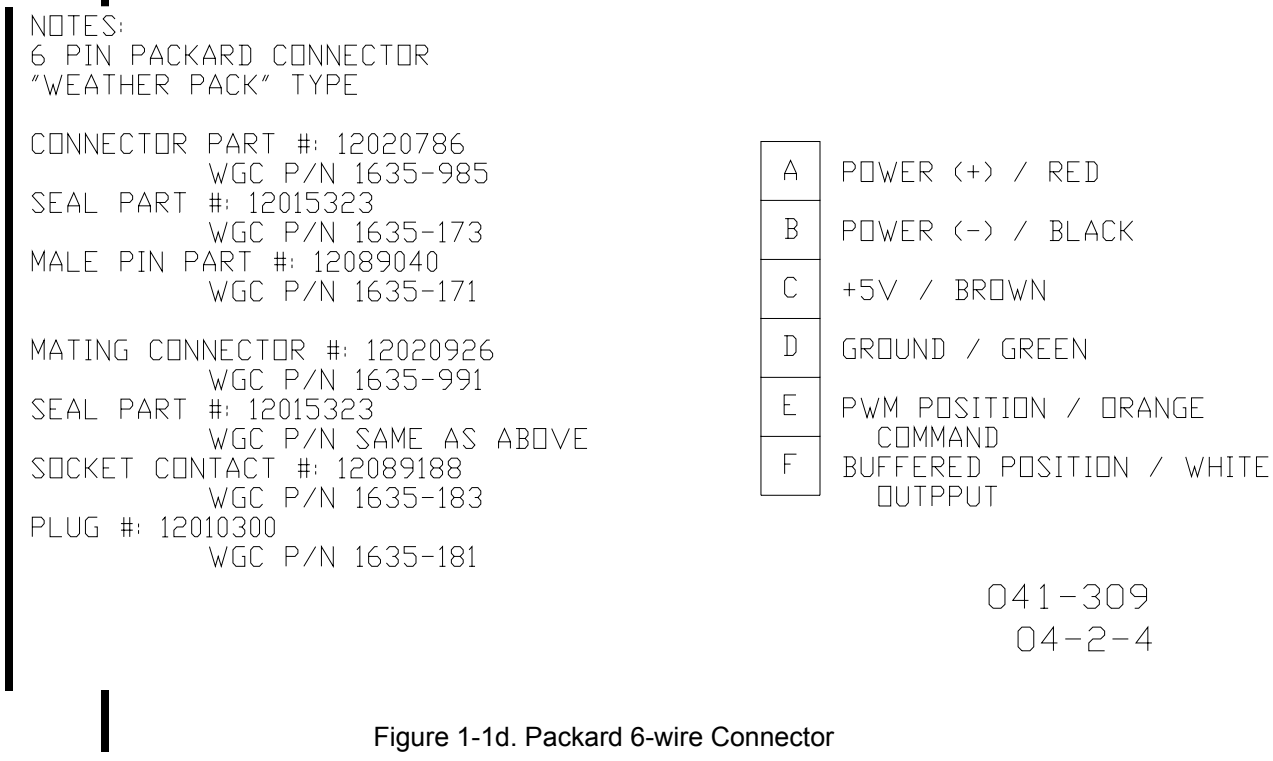

Figure 1-1d. Packard 6-wire Connector

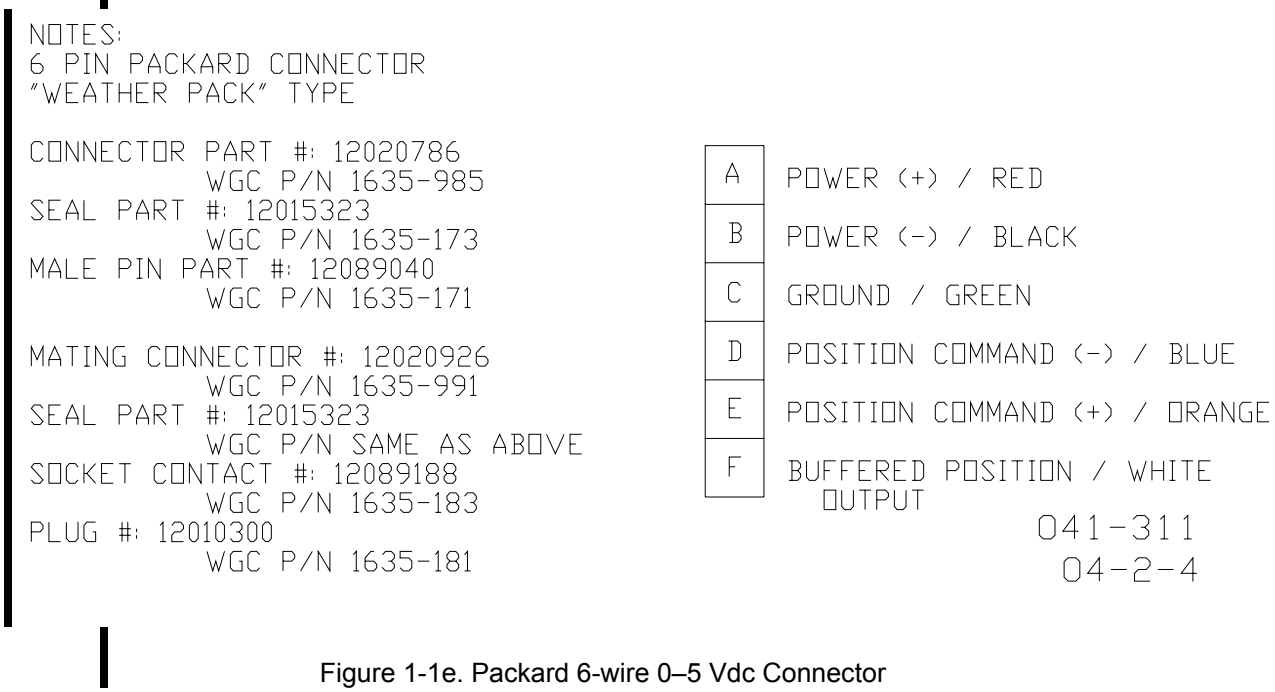

Figure 1-1e. Packard 6-wire 0–5 Vdc Connector

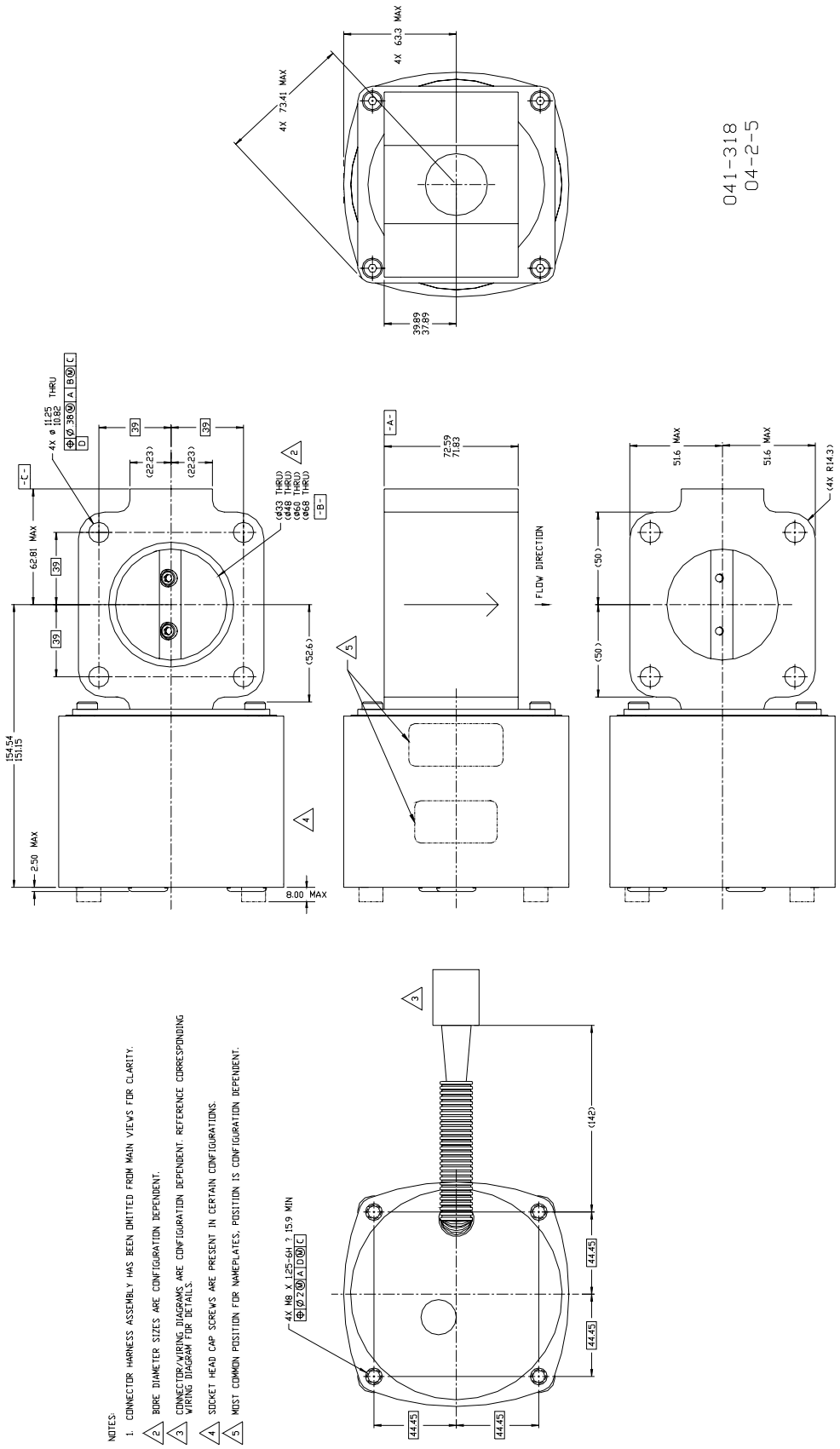

Figure 1-2a. Flo-Tech Outline Drawing (No Flange Mounting)

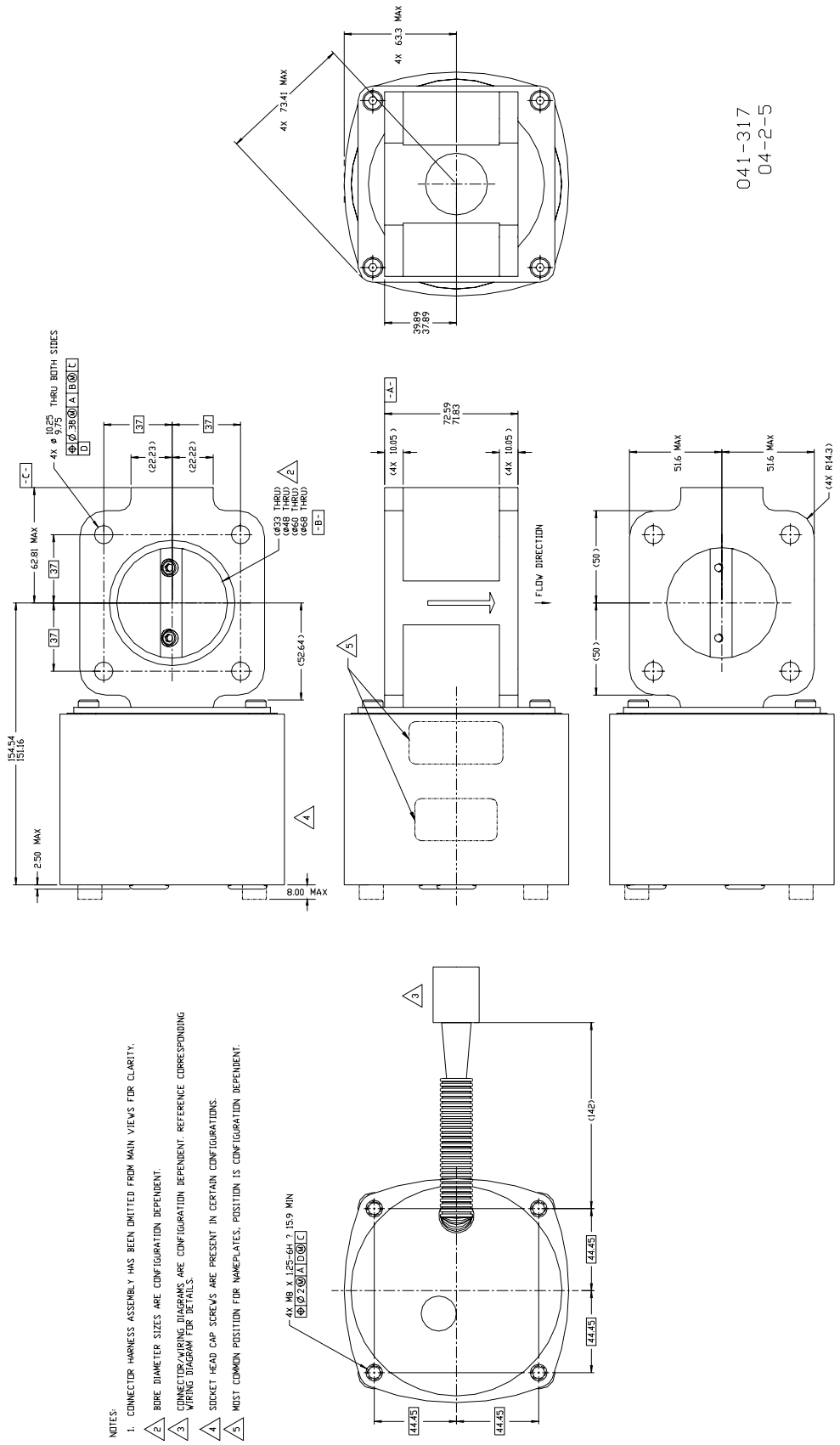

Figure 1-2b. Flo-Tech Outline Drawing (Standard Flange Mounting)

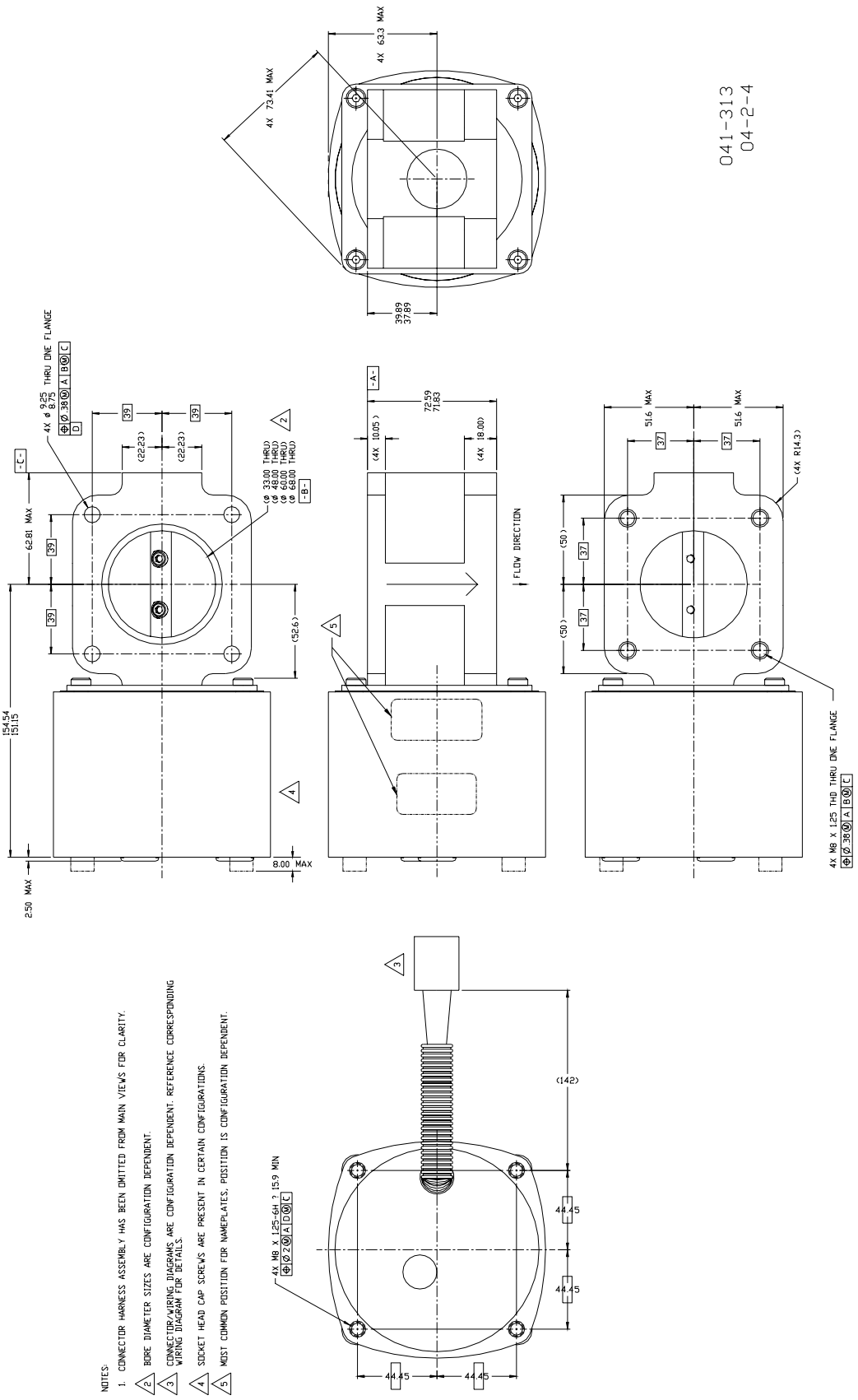

Figure 1-2c. Flo-Tech Outline Drawing (Thick Flange Mounting)

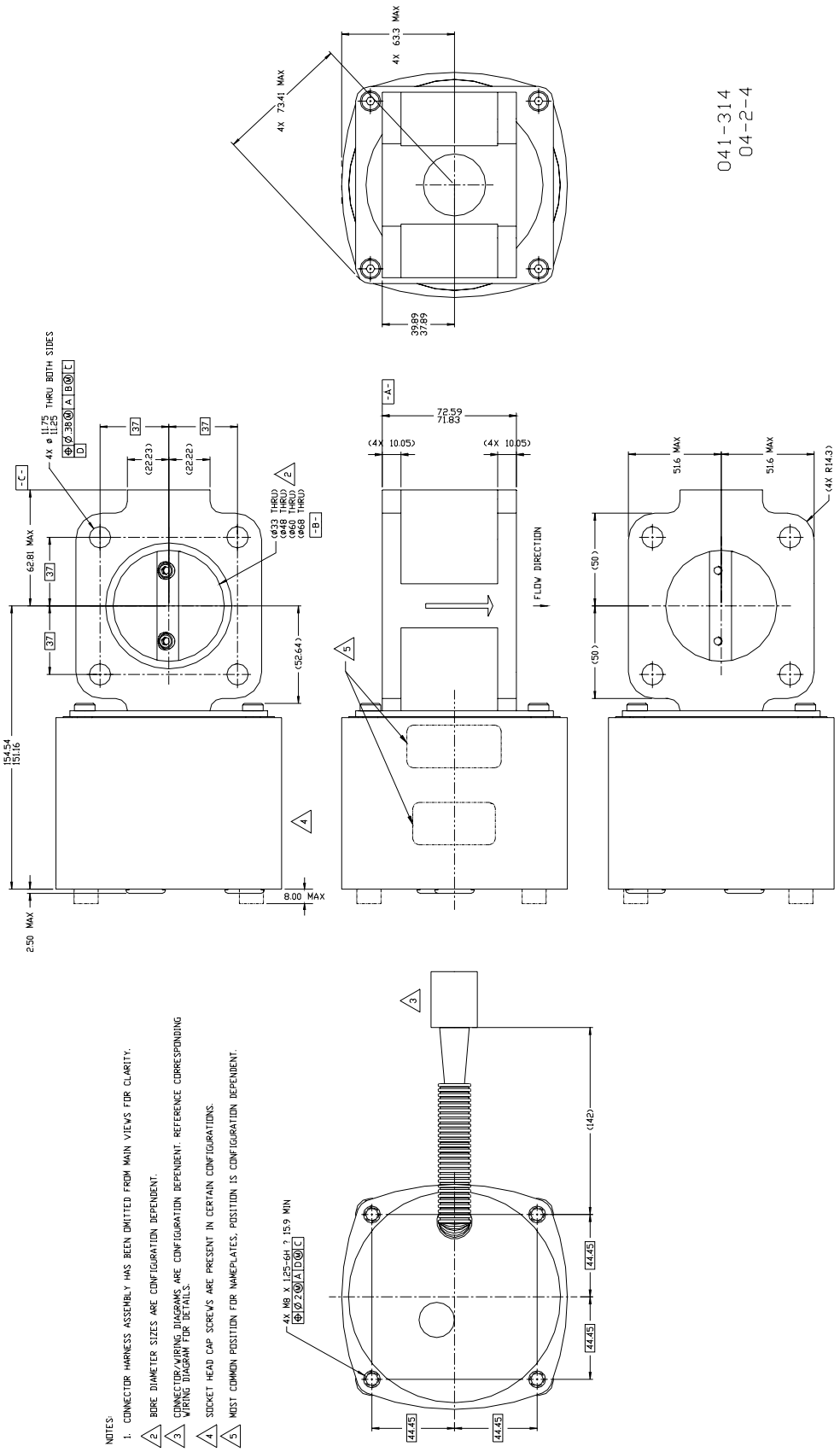

Figure 1-2d. Flo-Tech Outline Drawing (M10 Flange Mounting)

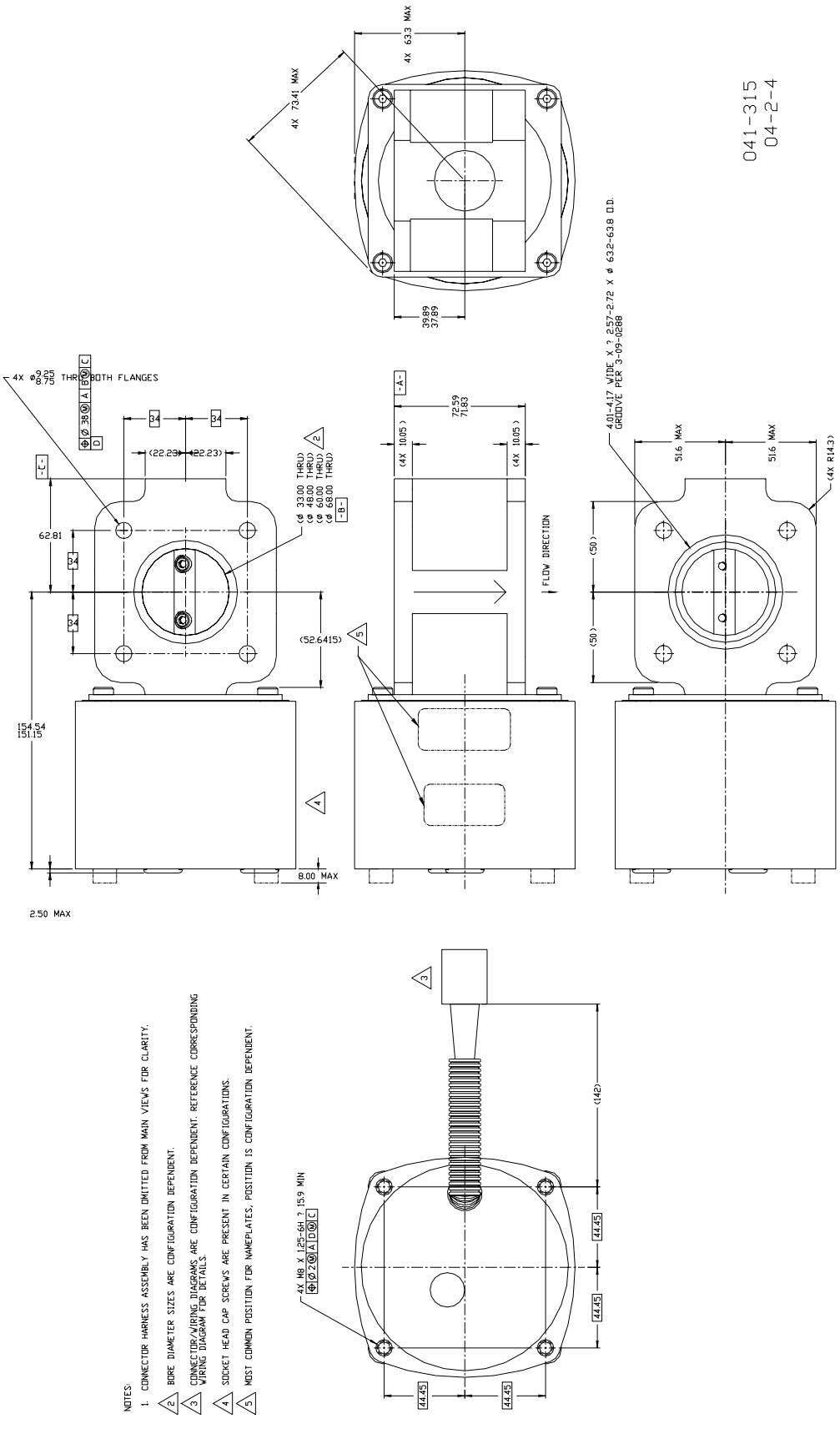

Figure 1-2e. Flo-Tech Outline Drawing (O-ring Flange Mounting)

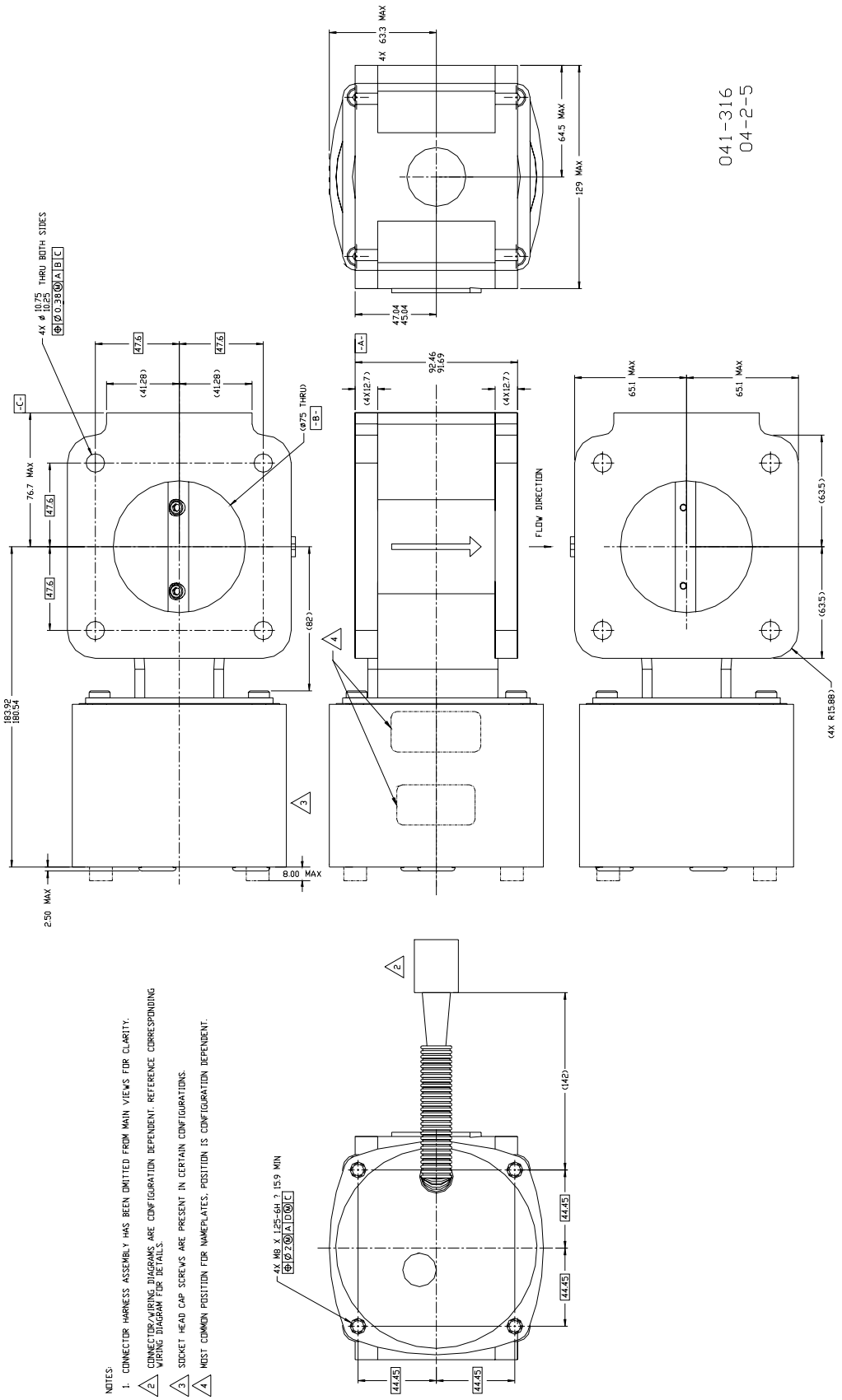

Figure 1-2f. Flo-Tech Outline Drawing (75 mm Flange Mounting)

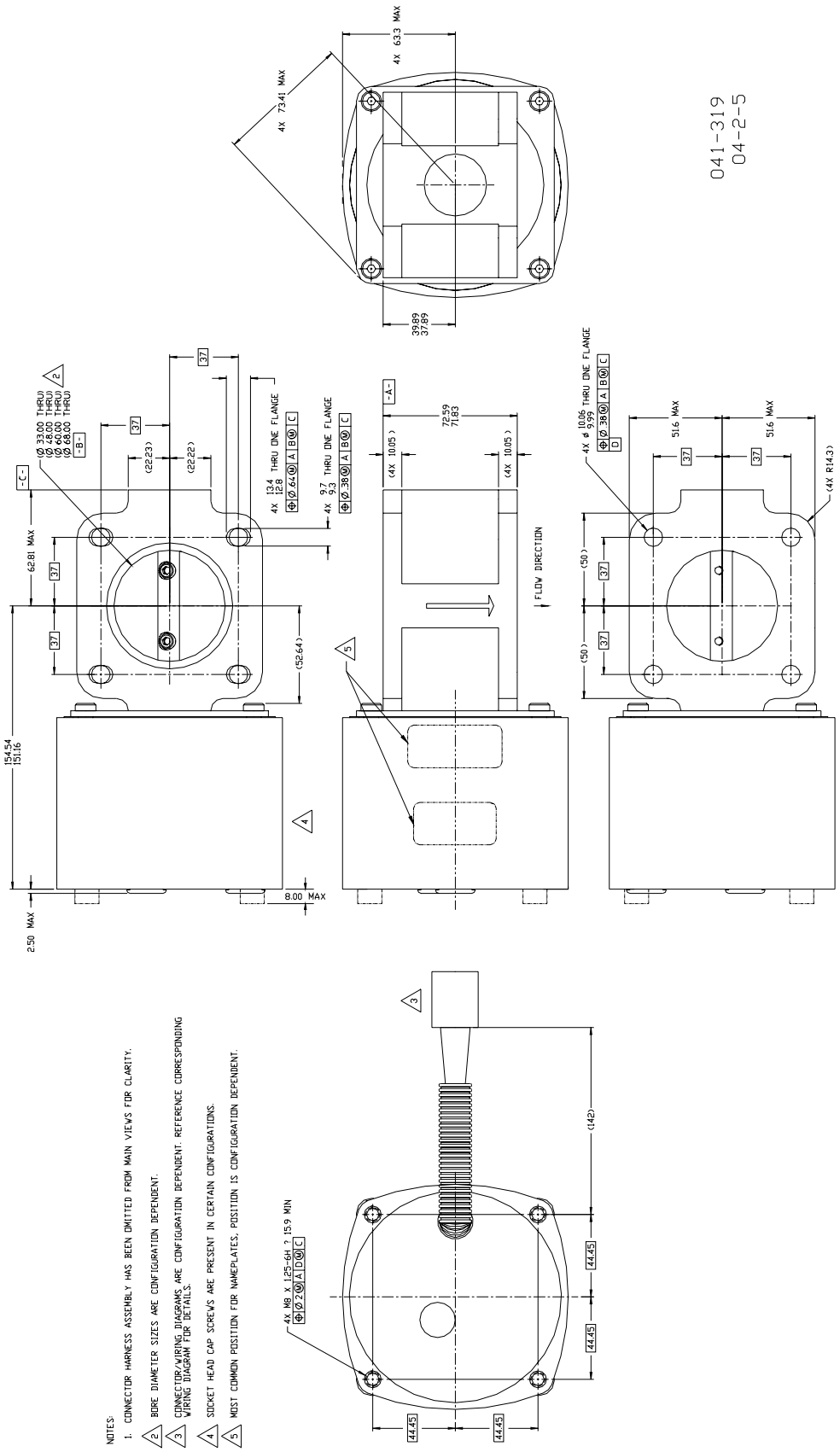

Figure 1-2g. Flo-Tech Outline Drawing (Top Slotted Flange Mounting)

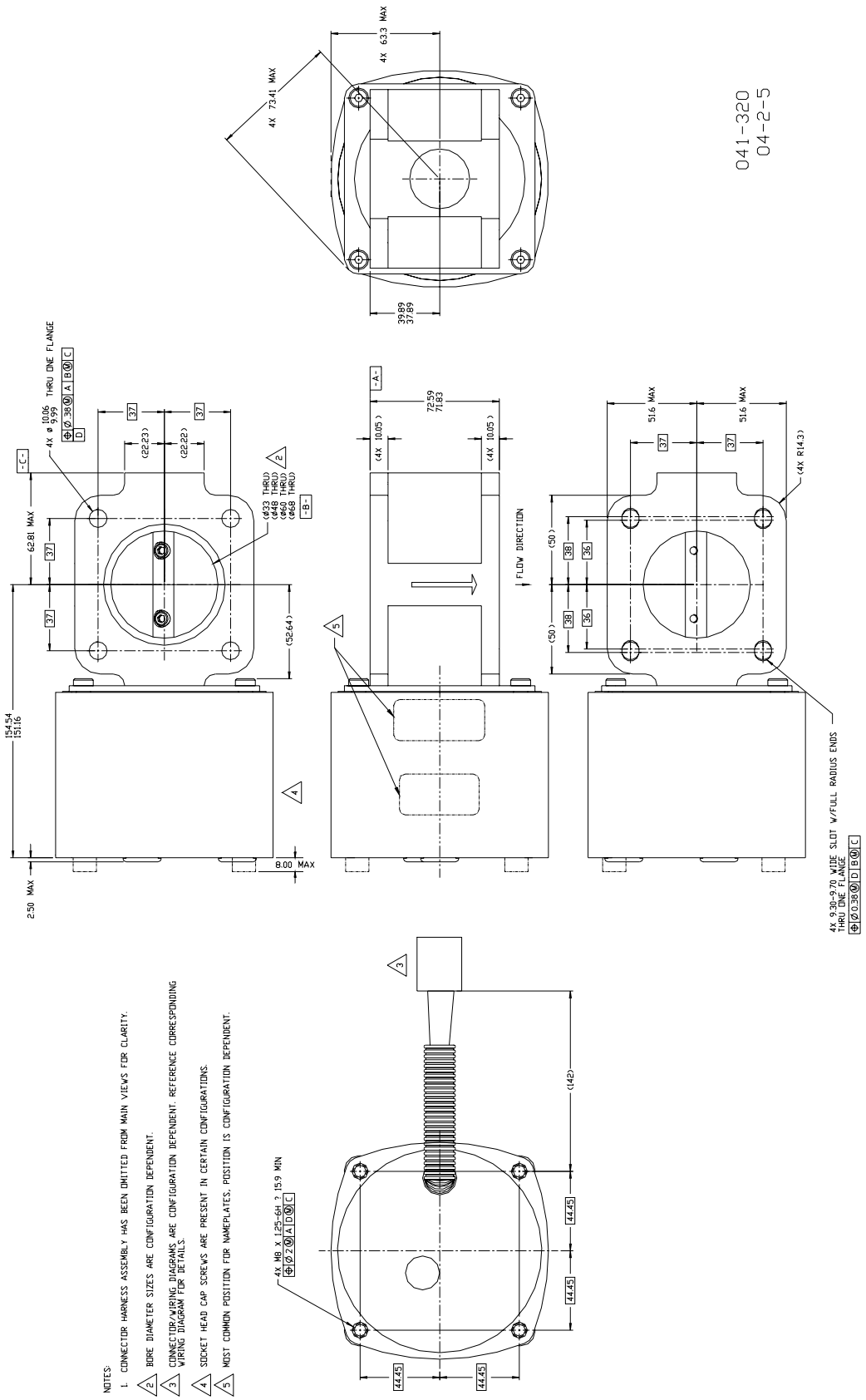

Figure 1-2h. Flo-Tech Outline Drawing (Bottom Slotted Flange Mounting)

Chapter 2.
Service Options

Product Service Options

The following factory options are available for servicing Woodward equipment, based on the standard Woodward Product and Service Warranty (5-01-1205) that is in effect at the time the product is purchased from Woodward or the service is performed:

- Replacement/Exchange (24-hour service)
- Flat Rate Repair
- Flat Rate Remanufacture

If you are experiencing problems with installation or unsatisfactory performance of an installed system, the following options are available:

- Consult the troubleshooting guide in the manual.
- Contact Woodward technical assistance (see “How to Contact Woodward” later in this chapter) and discuss your problem. In most cases, your problem can be resolved over the phone. If not, you can select which course of action you wish to pursue based on the available services listed in this section.

Replacement/Exchange

Replacement/Exchange is a premium program designed for the user who is in need of immediate service. It allows you to request and receive a like-new replacement unit in minimum time (usually within 24 hours of the request), providing a suitable unit is available at the time of the request, thereby minimizing costly downtime. This is also a flat rate structured program and includes the full standard Woodward product warranty (Woodward Product and Service Warranty 5-01-1205).

This option allows you to call in the event of an unexpected outage, or in advance of a scheduled outage, to request a replacement control unit. If the unit is available at the time of the call, it can usually be shipped out within 24 hours. You replace your field control unit with the like-new replacement and return the field unit to the Woodward facility as explained below (see “Returning Equipment for Repair” later in this chapter).

Charges for the Replacement/Exchange service are based on a flat rate plus shipping expenses. You are invoiced the flat rate replacement/exchange charge plus a core charge at the time the replacement unit is shipped. If the core (field unit) is returned to Woodward within 60 days, Woodward will issue a credit for the core charge. [The core charge is the average difference between the flat rate replacement/exchange charge and the current list price of a new unit.]

Return Shipment Authorization Label. To ensure prompt receipt of the core, and avoid additional charges, the package must be properly marked. A return authorization label is included with every Replacement/Exchange unit that leaves Woodward. The core should be repackaged and the return authorization label affixed to the outside of the package. Without the authorization label, receipt of the returned core could be delayed and cause additional charges to be applied.

Katolight Service - Master Repair Manual - Page 2813

Flat Rate Repair

Flat Rate Repair is available for the majority of standard products in the field. This program offers you repair service for your products with the advantage of knowing in advance what the cost will be. All repair work carries the standard Woodward service warranty (Woodward Product and Service Warranty 5-01-1205) on replaced parts and labor.

Flat Rate Remanufacture

Flat Rate Remanufacture is very similar to the Flat Rate Repair option with the exception that the unit will be returned to you in “like-new” condition and carry with it the full standard Woodward product warranty (Woodward Product and Service Warranty 5-01-1205). This option is applicable to mechanical products only.

Returning Equipment for Repair

If a control (or any part of an electronic control) is to be returned to Woodward for repair, please contact Woodward in advance to obtain a Return Authorization Number. When shipping the item(s), attach a tag with the following information:

- name and location where the control is installed;
- name and phone number of contact person;
- complete Woodward part number(s) and serial number(s);
- description of the problem;
- instructions describing the desired type of repair.



CAUTION

To prevent damage to electronic components caused by improper handling, read and observe the precautions in Woodward manual 82715, *Guide for Handling and Protection of Electronic Controls, Printed Circuit Boards, and Modules*.

Packing a Control

Use the following materials when returning a complete control:

- protective caps on any connectors;
- antistatic protective bags on all electronic modules;
- packing materials that will not damage the surface of the unit;
- at least 100 mm (4 inches) of tightly packed, industry-approved packing material;
- a packing carton with double walls;
- a strong tape around the outside of the carton for increased strength.

Katolight Service - Master Repair Manual - Page 2814

Return Authorization Number

When returning equipment to Woodward, please telephone and ask for the Customer Service Department [1 (800) 523-2831 in North America or +1 (970) 482-5811]. They will help expedite the processing of your order through our distributors or local service facility. To expedite the repair process, contact Woodward in advance to obtain a Return Authorization Number, and arrange for issue of a purchase order for the item(s) to be repaired. No work can be started until a purchase order is received.

NOTE
We highly recommend that you make arrangement in advance for return shipments. Contact a Woodward customer service representative at 1 (800) 523-2831 in North America or +1 (970) 482-5811 for instructions and for a Return Authorization Number.

Replacement Parts

When ordering replacement parts for controls, include the following information:
- the part number(s) (XXXX-XXXX) that is on the enclosure nameplate;
- the unit serial number, which is also on the nameplate.

How to Contact Woodward

In North America use the following address when shipping or corresponding:

Woodward Governor Company
PO Box 1519
1000 East Drake Rd
Fort Collins CO 80522-1519, USA

Telephone—+1 (970) 482-5811 (24 hours a day)
Toll-free Phone (in North America)—1 (800) 523-2831
Fax—+1 (970) 498-3058

For assistance outside North America, call one of the following international Woodward facilities to obtain the address and phone number of the facility nearest your location where you will be able to get information and service.

Facility	Phone Number
Brazil	+55 (19) 3708 4800
India	+91 (129) 230 7111
Japan	+81 (476) 93-4661
The Netherlands	+31 (23) 5661111

You can also contact the Woodward Customer Service Department or consult our worldwide directory on Woodward's website (**www.woodward.com**) for the name of your nearest Woodward distributor or service facility.

Katolight Service - Master Repair Manual - Page 2815

Engineering Services

Woodward Industrial Controls Engineering Services offers the following after-sales support for Woodward products. For these services, you can contact us by telephone, by email, or through the Woodward website.

- Technical Support
- Product Training
- Field Service

Contact information:

Telephone—+1 (970) 482-5811
Toll-free Phone (in North America)—1 (800) 523-2831
Email—icinfo@woodward.com
Website—**www.woodward.com**

Technical Support is available through our many worldwide locations or our authorized distributors, depending upon the product. This service can assist you with technical questions or problem solving during normal business hours. Emergency assistance is also available during non-business hours by phoning our toll-free number and stating the urgency of your problem. For technical support, please contact us via telephone, email us, or use our website and reference ***Customer Services*** and then ***Technical Support***.

Product Training is available at many of our worldwide locations (standard classes). We also offer customized classes, which can be tailored to your needs and can be held at one of our locations or at your site. This training, conducted by experienced personnel, will assure that you will be able to maintain system reliability and availability. For information concerning training, please contact us via telephone, email us, or use our website and reference ***Customer Services*** and then ***Product Training***.

Field Service engineering on-site support is available, depending on the product and location, from one of our many worldwide locations or from one of our authorized distributors. The field engineers are experienced both on Woodward products as well as on much of the non-Woodward equipment with which our products interface. For field service engineering assistance, please contact us via telephone, email us, or use our website and reference ***Customer Services*** and then ***Technical Support***.

Katolight Service - Master Repair Manual - Page 2816

Technical Assistance

If you need to telephone for technical assistance, you will need to provide the following information. Please write it down here before phoning:

General

Your Name_____
Site Location_____
Phone Number_____
Fax Number_____

Prime Mover Information

Engine/Turbine Model Number_____
Manufacturer_____
Number of Cylinders (if applicable)_____
Type of Fuel (gas, gaseous, steam, etc)_____
Rating_____
Application_____

Control/Governor Information

Please list all Woodward governors, actuators, and electronic controls in your system:

Woodward Part Number and Revision Letter _____
Control Description or Governor Type _____
Serial Number _____

Woodward Part Number and Revision Letter _____
Control Description or Governor Type _____
Serial Number _____

Woodward Part Number and Revision Letter _____
Control Description or Governor Type _____
Serial Number _____

If you have an electronic or programmable control, please have the adjustment setting positions or the menu settings written down and with you at the time of the call.

Katolight Service - Master Repair Manual - Page 2817

Katolight Service - Master Repair Manual - Page 2818

Flo-Tech™ Control Specifications

Environment	
Weight	6 kg (13 lb)
Operating Temperature	–40 to +105 °C (–40 to +221 °F) housing temperature
Storage Temperature	–55 to +105 °C (–67 to +221 °F)
Operating Environment	Automotive Underhood—water, condensing and nun-condensing petrochemicals (oil. fuel, exhaust emissions, gasoline, diesel, natural gas,...,)
Media	The proper combustible mixture of engine intake air and natural gas or other Woodward approved media.
Vibration	
Sine Sweep	US MS 810C, M514.2 Curve J (Mod)
Random	US MS 202F, Method 214A, Cond. G
Temperature and Humidity	SAE J1455
Typical Control Characteristics	
Inputs	
Power Supply	9 to 32 Vdc (12/24 Vdc nominal) Must be able to supply 50 W for 0.25 seconds in transient conditions and 25 W continuous for steady state conditions.
Outputs	
Position Feedback:	
Nominal Actuator Range	0 to 70 degrees
Position Feedback Output	0.5–4.5 ± 0.1 Vdc
Working Pressures	14 to 345 kPa (2 to 50 psia)
Electrical Specifications	
Operating Voltage	9 to 32 Vdc (12/24 Vdc nominal)
Power Requirements	50 W for 0.25 s in transient conditions and 25 W continuous for steady state conditions.
Position Command	
Pulse Width Modulated Input Signal (PWM)	duty cycle range 10–90% duty cycle above 95% results in throttle closure input impedance 117.4 kΩ PWM frequency range 500–2000 Hz with amplitude 4–32 Vdc and 10 bit resolution
0–5 Vdc Input Signal	input range 0.5–4.5 Vdc input impedance 152.7 kΩ
4–20 mA Input Signal	input impedance 249 Ω
0–200 mA Input Signal	input impedance 35.7 Ω
Position Feedback	
Nominal Actuator Range	0° to 70°
Position Sensor Output	0.5–4.5 ±0.1 Vdc @ 77 °F (25 °C)
Temperature Drift	Temperature drift from 25 to 105 °C or from 25 to –40 °C causes the internal position sensor calibration to shift. Under these conditions, the throttle plate starts to open at a sensor output of 0.8 Vdc and is fully open at a sensor output of 4.2 Vdc. The sensor output continues to track the command signal.

We appreciate your comments about the content of our publications.

Send comments to: icinfo@woodward.com

Please include the manual number from the front cover of this publication.

WOODWARD

PO Box 1519, Fort Collins CO 80522-1519, USA
1000 East Drake Road, Fort Collins CO 80525, USA
Phone +1 (970) 482-5811 • Fax +1 (970) 498-3058

Email and Website—www.woodward.com

FM 57982
BS EN ISO 9001:1994
6 March 2001

**Woodward has company-owned plants, subsidiaries, and branches,
as well as authorized distributors and other authorized service and sales facilities throughout the world.**

Complete address / phone / fax / email information for all locations is available on our website.

04/5/F



Flo-Tech™
Speed Control

Electronic Speed Control for Flo-Tech
UL/cUL Listed E97763

Installation, Calibration, and Troubleshooting Manual

Manual 04173C

WARNING
Read this entire manual and all other publications pertaining to the work to be performed before installing, operating, or servicing this equipment. Practice all plant and safety instructions and precautions. Failure to follow instructions can cause personal injury and/or property damage.

The engine, turbine, or other type of prime mover should be equipped with an overspeed (overtemperature, or overpressure, where applicable) shutdown device(s), that operates totally independently of the prime mover control device(s) to protect against runaway or damage to the engine, turbine, or other type of prime mover with possible personal injury or loss of life should the mechanical-hydraulic governor(s) or electric control(s), the actuator(s), fuel control(s), the driving mechanism(s), the linkage(s), or the controlled device(s) fail.

CAUTION
To prevent damage to a control system that uses an alternator or battery-charging device, make sure the charging device is turned off before disconnecting the battery from the system.

Electronic controls contain static-sensitive parts. Observe the following precautions to prevent damage to these parts.

- **Discharge body static before handling the control (with power to the control turned off, contact a grounded surface and maintain contact while handling the control).**
- **Avoid all plastic, vinyl, and styrofoam (except antistatic versions) around printed circuit boards.**
- **Do not touch the components or conductors on a printed circuit board with your hands or with conductive devices.**

IMPORTANT DEFINITIONS

WARNING—indicates a potentially hazardous situation which, if not avoided, could result in death or serious injury.

CAUTION—indicates a potentially hazardous situation which, if not avoided, could result in damage to equipment.

NOTE—provides other helpful information that does not fall under the warning or caution categories.

Revisions—Text changes are indicated by a black line alongside the text.

Woodward Governor Company reserves the right to update any portion of this publication at any time. Information provided by Woodward Governor Company is believed to be correct and reliable. However, no responsibility is assumed by Woodward Governor Company unless otherwise expressly undertaken.

© 1997 by Woodward Governor Company
All Rights Reserved

Contents

CHAPTER 1. GENERAL INFORMATION 1
Introduction 1
Description 1
Electronic Control 1
Isochronous Speed Control 1
Start Fuel Limit 2
Idle and Rated Speed and Dual Dynamics 2
Accessories 2
DSLC Digital Synchronizer and Load Control 2
Generator Load Sensor 3
SPM-A Synchronizer 3
Acceleration/Deceleration Ramp Generators 3
References 3

CHAPTER 2. INSTALLATION 7
Introduction 7
Speed Control Installation 7
Unpacking 7
Mounting 7
Magnetic Pickup 8
Wiring Instructions 8
Shielded Wiring 8
Magnetic Pickup Connections 9
Speed Trim Connections 9
Idle/Rated Switch 9
Idle/Rated Dynamics Switch 10
Auxiliary Input 10
Accel/Decel Ramp 10
Shields 10

CHAPTER 3. CALIBRATION AND OPERATION 11
Introduction 11
Signal Generator 11
Installation Checks 11
Initial Pre-Start Settings 13
Start-up Adjustments 13
Adjust for Stable Operation 14
Dynamic Adjustment 15
Start Fuel Limit 17

Katolight Service - Master Repair Manual - Page 2823

Contents

CHAPTER 4. DESCRIPTION OF OPERATION 19
Introduction 19
Electronic Circuits 19
Speed Control 19
Stability and Gain 19
Start Fuel Limit 20
Failed Speed Sensor 20
Auxiliary Input 20
Ramp Generator 20
Speed Trim 21

CHAPTER 5. TROUBLESHOOTING 23
Introduction 23
When the Governor is at Fault 23
Stability Problems 24
Magnetic Pickup 24

CHAPTER 6. SERVICE OPTIONS 25
Product Service Options 25
Replacement/Exchange 25
Flat Rate Repair 26
Flat Rate Remanufacture 26
Returning Equipment for Repair 26
Packing a Control 27
Return Authorization Number 27
Replacement Parts 27
How to Contact Woodward 28
Engineering Services 28
Technical Assistance 30

Illustrations and Tables

1-1. Flo-Tech Speed Control and Throttle Applied to a Gas Engine 4
1-2. Flo-Tech Control Outline Drawing 5
1-3. Plant Wiring Diagram 6
3-1. Diesel Engine Response Curves 16

Katolight Service - Master Repair Manual - Page 2824

Chapter 1
General Information

Introduction

This manual is designed to provide the installer and operator of the Woodward Flo-Tech™ Speed Control the information needed to successfully install the speed control and to provide for operation, maintenance, and troubleshooting of the system.

Description

The Flo-Tech Speed Control is designed to provide basic isochronous speed control for gas engines using the Flo-Tech Throttle. Engines with mechanical loads and generator loads are handled equally well. Current and potential transformers and a Generator Load Sensor are required to control generator sets which will be paralleled.

Electronic Control

The Flo-Tech Speed Control is housed in a rugged aluminum casting which permits installation on the engine switch gear or generator panel. The electronics are not designed for installation directly on the engine.

The control is available for 12 or 24 Vdc power.

Idle and rated speed references may be set in the control. Rated speed is set with an internal 25-turn potentiometer between 3000 and 6000 Hz. Other ranges are available. (Hz is defined as the number of gear teeth the magnetic pickup will see during one complete revolution of the engine multiplied by the desired rpm divided by 60.)

$$Hz = \frac{No.\ of\ teeth\ x\ RPM}{60}$$

Isochronous Speed Control

Isochronous control provided by the Flo-Tech Speed Control is always constant within the ability of the engine to carry the load. Multiple engine-generator systems supplying an isolated bus require a load sensor on each generator to provide isochronous load sharing throughout the system. Likewise, load sensors must be used if Flo-Tech-controlled engines are to be connected with a utility bus.

Katolight Service - Master Repair Manual - Page 2825

Start Fuel Limit

The adjustable start-fuel limit (cranking throttle) is set with a potentiometer on the control. The limit is automatically enabled whenever the engine shuts down. The limit is disabled when the engine reaches idle or rated speed as selected. If the start-fuel limit feature is not needed, the limit must be set fully clockwise so the fuel control output can go to maximum during start up. Start fuel limit can be adjusted to improve starting, decrease overfueling, and shorten cranking time.

Idle and Rated Speed and Dual Dynamics

Separate dynamics are available for idle and rated speeds as set in the electronic control. Idle speed is set with a separate potentiometer as a percentage of rated speed. The idle speed adjustment can be set between 25% and 100% of rated.

An external switch selects idle or rated dynamics. The switch may be arranged to be operated manually or through a generator breaker auxiliary contact. The idle dynamics are adjusted for the engine characteristic at idle speed unloaded. Rated dynamics are adjusted for the engine characteristics at rated speed or loaded. A common type of installation has the switch close when the engine-generator set is placed on line with a generator breaker closure. Rated dynamics are often set for best response when the engine is loaded. Idle dynamics are always set for best response when the engine is unloaded.

Providing different dynamics at the two selected speeds offers faster response at rated for better engine performance and smooth operating at idle for maximum efficiency and minimum fuel system wear.

Accessories

This manual contains some information about accessories often used with the Flo-Tech Speed Control.

DSLC™ Digital Synchronizer and Load Control

The DSLC™ control, when connected to each Flo-Tech Speed Control, provides an integrated means to automatically synchronize, control power and power factor, share load, and monitor multi-generator-set systems.

Katolight Service - Master Repair Manual - Page 2826

Generator Load Sensor

The Generator Load Sensor provides isochronous load sharing between engines in a multi-generator system by comparing the power output of the generator PT and CTs for each of the three phases from each system generator, and biasing the load sharing line network between the various Flo-Tech controlled engines to compensate for differences in load. The Load Sensor also provides a method to attach an SPM-A Synchronizer and other specialized control items to the generator control system. Generator droop operation can be achieved for infinite bus parallel operation and base loading.

SPM-A Synchronizer

The SPM-A Synchronizer, attached to the Flo-Tech system through a load sensor, will automatically bias the rated-speed setting until an engine/generator is in parallel with the bus. When the speed and generator phases are synchronized with the bus, the synchronizer will call for a breaker closure, smoothly and automatically connecting the generator with the bus.

Acceleration/Deceleration Ramp Generators

A Ramp Generator, or an external capacitor, can be used to increase the time to go from idle to rated speed and from rated speed to idle.

The 8271-909 Ramp Generator provides a linear ramp with times adjustable to 25 seconds in a typical case. Using a capacitor provides about one second of ramp time per 50 TF, 200 TF maximum.

References

Product Specification	Title
02006	*DSLC Digital Synchronizer and Load Control*
82314	*Generator Load Sensor*
82380	*APTL Automatic Power Transfer and Load Control*
82399	*AGLC Automatic Generator Loading Control*
02010	*Magnetic Pickup*
82383	*SPM-A Synchronizer*

Publications may be ordered from any Woodward office. Woodward application engineers are also available to help you in the selection of the correct control for your system, or to answer questions concerning control installation, operation, or calibration.

Katolight Service - Master Repair Manual - Page 2827

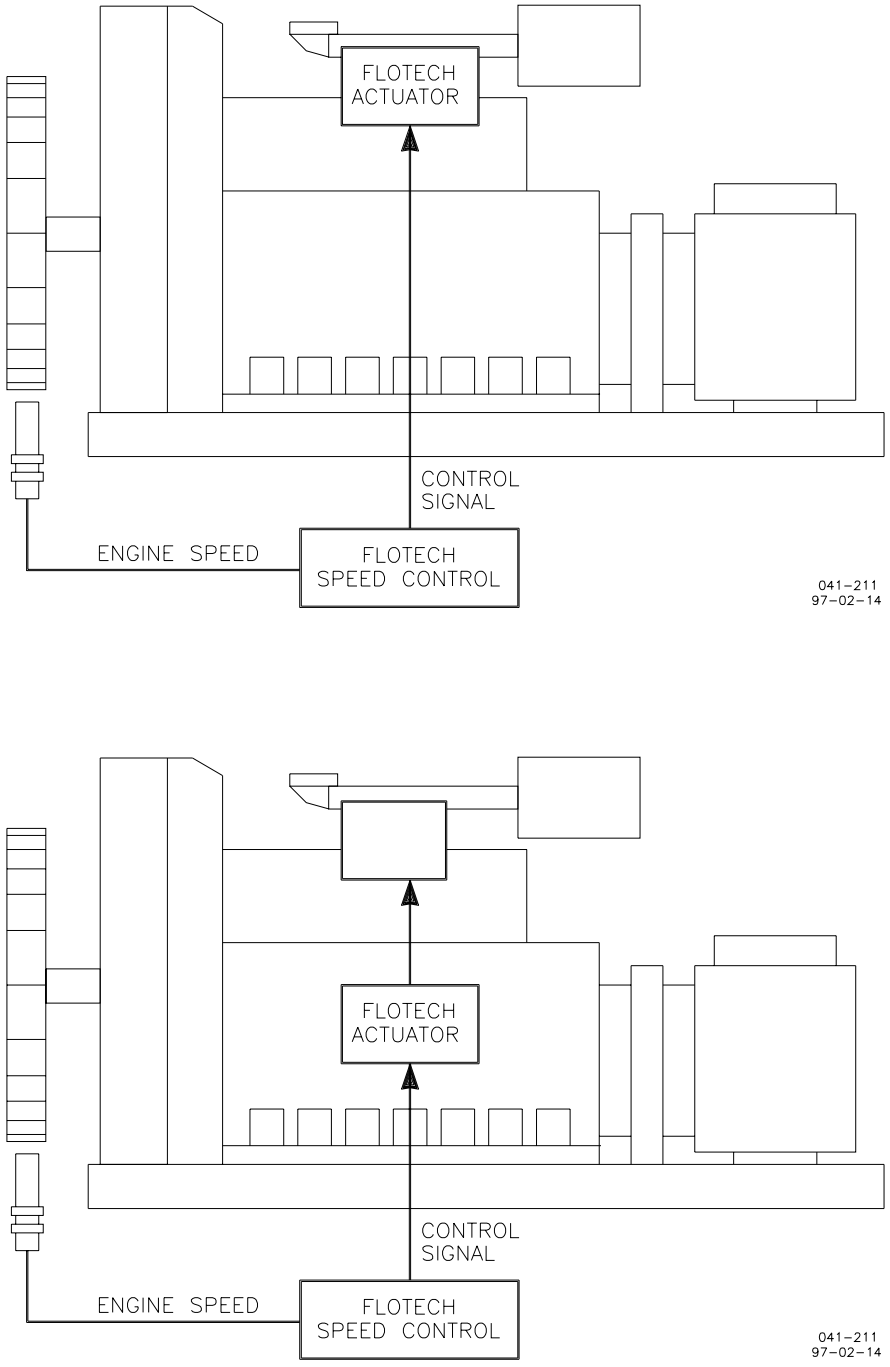

Figure 1-1. Flo-Tech Speed Control and Throttle Applied to a Gas Engine

Katolight Service - Master Repair Manual - Page 2828

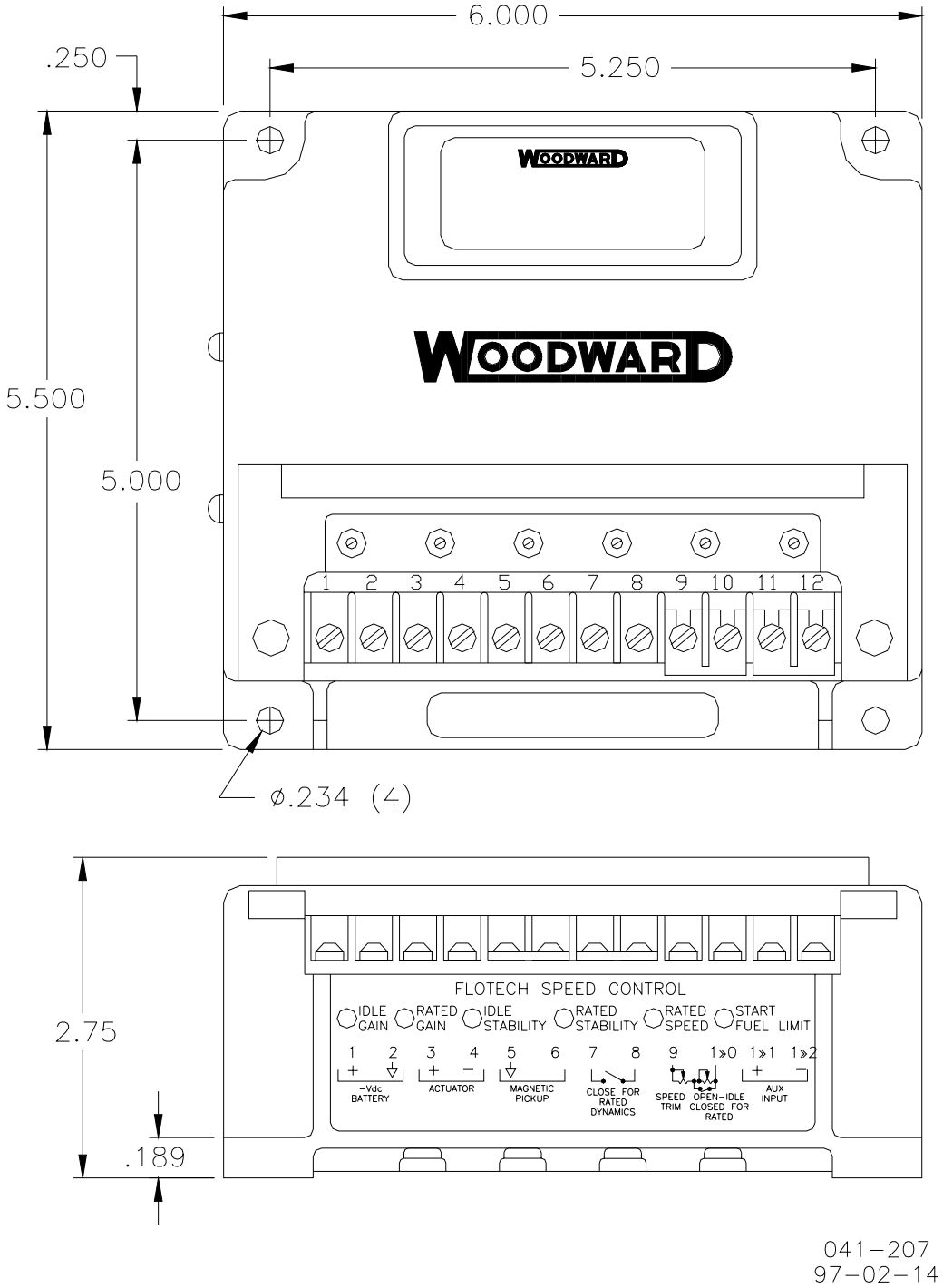

Figure 1-2. Flo-Tech Control Outline Drawing

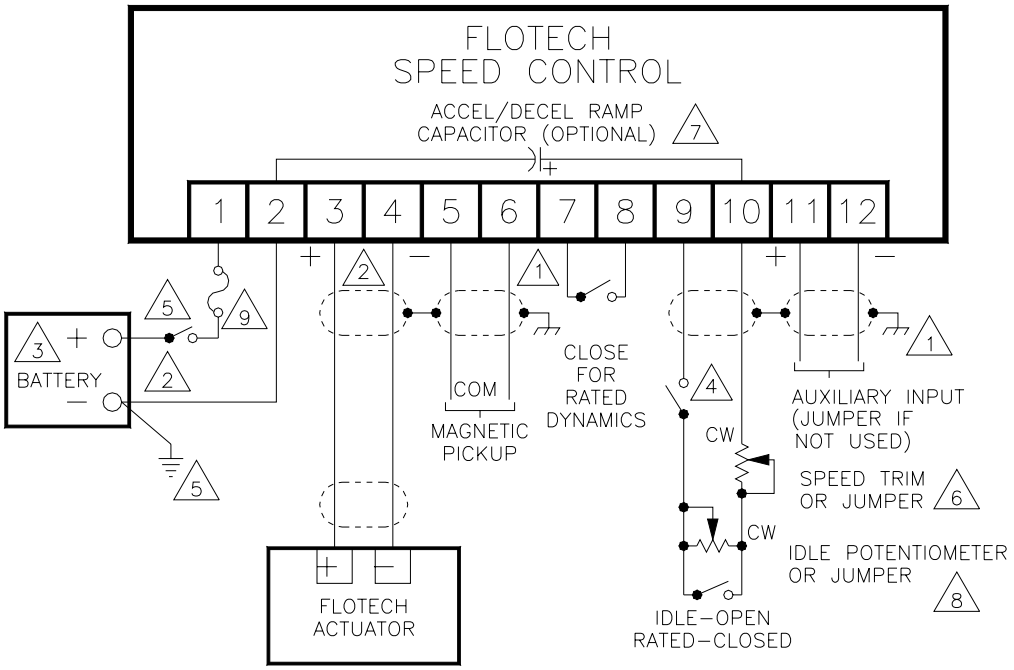

1. Shielded wires to be twisted pairs with shield grounded at one end only.
2. No. 18 AWG or 20 AWG stranded wire. Must be as short as possible. 50 ft. maximum wire length for 20 AWG wire. 80 ft. maximum wire length for 18 AWG wire.
3. Use P/N 8290−196 for 12 volt system.
   Use P/N 8290−195 for 24 volt system.
4. Open for minimum fuel.
5. For positive ground systems, switch and fuse to be located in series with battery (−) and terminal 2. Positive terminal becomes chassis ground. Leads from battery to terminals 1 & 2 must be direct and not pass through distribution points.
6. Approximate speed change with trim potentiometer
   ±2.5% using a 1K Ohm potentiometer
   ±5% using a 2K ohm potentiometer
7. About one second ramp time per 50 µF. Capacitor specifications: 200 µF maximum, 15 WVdc. minimum. 15 WVdc maximum. Less than 30 µA DC leakage current over temperature range.
8. Idle range about 25% to 100% rated using 50K potentiometer.
9. Use a 1 amp fuse (3 AG or GLM type).

041−209
97−11−10 skw

Figure 1-3. Plant Wiring Diagram

Katolight Service - Master Repair Manual - Page 2830

Chapter 2
Installation

Introduction

This chapter contains general installation instructions for the Flo-Tech™ Speed Control. Power requirements, ambient temperature limits, and location considerations are included to determine the best location for the control.

Speed Control Installation

Unpacking

Be careful when unpacking the electronic control. Check the control for signs of damage such as bent or dented panels, scratches, and loose or broken parts. Notify the shipper and Woodward if damage is found.

Mounting

The control box is designed to operate within a temperature range of –40 to +70 °C (–40 to +158 °F).

Mount the control in a location with space for adjustment and wiring access. Do not expose the control to sources of radiant heat such as exhaust manifolds or turbochargers. Choose a protected location so the control won't be damaged when moving the engine or when nearby equipment is moving. Mount the control close enough to the fuel valve and battery to meet the wire-length requirements (see wiring instructions in this chapter). Fuse the power source with a 1 amp fuse, as shown in the plant wiring diagram (Figure 1-3).

Do not install the control box directly on the engine.

The control will generate some heat, and surfaces must be open to normal air movement. No special ventilation is required.

Ideally, the control should be mounted flush to the metal side of a control cabinet, protected from the weather and high humidity, and close to the engine being controlled. The location should provide protection from high-voltage or high-current devices, or devices which produce electro-magnetic interference. After initial adjustments are completed, all functions may be selected with remote switches on the control panel. Ready access to the control will not be required for normal engine operation.

Katolight Service - Master Repair Manual - Page 2831

Magnetic Pickup

Install the magnetic pickup (MPU) to work with the selected gear through a housing or rigid bracket. Make sure the sensed gear is of magnetic material. Set the gap between the gear and the end of the magnetic pickup according to instructions which accompany the pickup.

Magnetic pickups of various sizes are available from Woodward.

The standard models of magnetic pickups require mating connectors, MS 3102R-18-3P. The connectors can be furnished with the MPU ordered from Woodward.

Manual 82510 *Magnetic Pickups and Proximity Switches for Electric Governors* contains detailed information on the installation of the sensing device.

Wiring Instructions

External wiring connections and shielding requirements for a typical control installation are shown in the plant wiring diagram (Figure 1-3). These wiring connections and shielding requirements are explained in the balance of this chapter.

Electromagnetic interference (EMI) is the undesirable interaction of electronic circuits with each other and sometimes with themselves.

Woodward has established procedures to prevent most EMI which will affect prime-mover-control circuits. Following these procedures is a slight extra expense in planning and installing electronic governing systems, but is inexpensive insurance over the life of the plant. Follow all of the shielding instructions to assure maximum efficiency and dependability of the electronic governing system.

Application Note 50532 *EMI Control for Electronic Governing Systems* has additional information on EMI causes and prevention.

To satisfy EMC requirements, a varistor must be attached to the input power connection pins (1 & 2). The varistor should be equivalent to a V47ZA7.

Shielded Wiring

All shielded cable must be twisted conductor pairs. Do not attempt to tin the braided shield. All signal lines should be shielded to prevent picking up stray signals from adjacent equipment. Connect the shields to the control case as shown in the plant wiring diagram (Figure 1-3). Wire exposed beyond the shield should be as short as possible, not exceeding 150 mm (6 inches). The other end of the shields must be left open and insulated from any other conductor. Do not run shielded signal wires in conduit or bundled with high voltage or high current wires.

Katolight Service - Master Repair Manual - Page 2832

Magnetic Pickup Connections

Use 1.0 mm² or 0.5 mm² (18 or 20 AWG) shielded two-conductor cable from the magnetic pickup to terminals 5 and 6 on the control. Leave the shield open at the magnetic pickup and ground the shield at the control. Polarity is unimportant.

Speed Trim Connections

If a speed-trim pot is to be used, it should be connected to terminals 9 and 10, as shown on the plant-wiring diagram (Figure 1-3). Use 1.0 mm² or 0.5 mm² (18 or 20 AWG) shielded cable with the shield open at the potentiometer and switch connections and tied to chassis ground at the control end.

A 1 kΩ pot will provide about ±2.5 percent speed change from maximum to minimum setting. A 2 kΩ pot will offer about ±5 percent change in speed. Install a single-pole, single-throw switch between terminal 9 and the pot to provide minimum fuel or shutdown when open.



WARNING

Do not use the "Open for Min Fuel" switch in the speed trim circuit for emergency shutdown of the engine. The emergency shutdown must be completely separate from the speed control circuit, not depending on the fuel valve or control to provide the shutdown. Life threatening overspeed is possible if a separate overspeed system is not used.

A speed-trim pot is often required for loading when the a load sensor is used in the droop mode, or for remote adjustment.

Idle/Rated Switch

Use 1.0 mm² or 0.5 mm² (18 or 20 AWG) shielded two-conductor cable to install a single-pole, single-throw switch between terminals 12 and 13 on the control. Leave the shield open at the switch and ground the shield with the other shields on the case.

When the switch is open, the engine will operate at the idle speed. When the switch is closed the engine will operate at the rated speed.

The installation should take into account that the engine will go directly to high speed should the engine restart before the switch is opened. If idle-rated speed selection is not desired, install a jumper (Woodward part number 1606-899) across terminals 9 and 10.

Katolight Service - Master Repair Manual - Page 2833

Idle/Rated Dynamics Switch

Connect a single-pole, single-throw switch between terminals 7 and 8. Close the switch for rated dynamics, open for idle dynamics. If desired, a single-throw double-pole switch can be installed on terminals 7–8 and 9–10 to automatically select rated dynamics when rated speed is selected. The switch between terminals 7 and 8 may be connected to a switch that will be closed by the auxiliary breaker switch, if it is desired to go automatically to rated dynamics when the generator unit is paralleled with the bus (loaded). This permits using the idle (slower) dynamics while synchronizing and then changing to the rated (quicker) dynamics when load is applied. Use 18 or 20 AWG stranded wire to connect the switch to the terminals. The wire does not have to be shielded.

Auxiliary Input

If a synchronizer, load sensor, or other speed modifying equipment is used, attach it to terminals 11 (+) and 12 (-). Use 1.0 mm² or 0.5 mm² (18 or 20 AWG) shielded, twisted-pair wire to make the connection. Tie the shield to the speed-control chassis. Jumper terminal 11 to 12 if special speed-modifying equipment is not used.

Accel/Decel Ramp

If a ramp generator or a capacitor is used to control acceleration and deceleration rates, connect positive (+) to terminal 10 and negative (–) to terminal 2. Using a capacitor between terminals 10 and 2 will provide about one second of ramp time per 50 TF. The ramp is non-linear. Use a 50 to 200 TF capacitor, 15 Vdc minimum working voltage. The capacitor must have less than 30 TA dc leakage current over the temperature range. If a Woodward Ramp Generator (8271-909) is attached to terminals 10 and 2, the ramp can be adjusted up to 25 seconds from idle to rated speed.

Shields

Ground all shields to one of the bolts used to mount the control. Do not have any of the shields tied to ground at the other end. This is necessary to reduce EMI signals from entering the control with ground loops.

When passing shields through connectors and terminal blocks, treat each shield as if it were a signal wire. Each shield must be given its own pin or terminal and be kept insulated from nearby wires and metal conductors. Do not tin (solder) braided shields.

Connect the speed-control chassis to system ground.

Katolight Service - Master Repair Manual - Page 2834

Chapter 3
Calibration and Operation

Introduction

Initial calibration and troubleshooting of the Flo-Tech Speed Control are identical. Many of the settings are interrelated. For this reason, if trouble is experienced, the best procedure is to follow the initial installation routine completely to see if the problem is cured by adjustment of the system.

Signal Generator

A signal generator to simulate the output of the MPU will make setup or troubleshooting of the electronic control system easier and safer, since it will allow the technician to set idle and rated speeds and check all wiring without running the engine. The wave form can be sine, square, or triangular. The signal generator must be capable of generating the frequency of the control system, not the rpm of the engine. The frequency will be the number of teeth on the sensed gear which will exposed to the MPU during one revolution of the engine times the desired rpm divided by 60 (revolutions per second).

$$Hz = \frac{No.\ of\ teeth\ x\ RPM}{60}$$

If a signal generator is not available, all checks can be made with the engine, but overspeeds are possible.



WARNING
TO PROTECT AGAINST POSSIBLE INJURY, LOSS OF LIFE, and/or Property DAMAGE WHEN STARTING the engine, turbine, or other type of prime mover, BE PREPARED TO MAKE AN EMERGENCY SHUTDOWN to protect against runaway or overspeed should the mechanical-hydraulic governor(s), fuel control(s), the driving mechanism(s), the linkage(s), or the control device(s) fail.

Installation Checks

Do the checks in the order indicated. Terminal numbers in this chapter refer to the speed control.

Katolight Service - Master Repair Manual - Page 2835

1. Check that all electrical connections are correctly made and terminal screws tightened, the magnetic pickup is properly installed and the jam nut tightened, and the fuel valve and drain line are securely fastened and correctly installed.

2. Do not start the engine now. Turn on governor power. Check the battery voltage at terminals 1 (+) and 2 (–). It must be from 18 to 32 Vdc (10 to 14 Vdc for the 12-volt control).

3. **If a signal generator is available**: Attach the output to terminals 5 and 6, leaving the MPU connections off. Set the signal-generator output between 2 and 10 Vrms. If a signal generator is not available, proceed to step 8.

4. Set the signal-generator frequency to about half of idle speed. Close the Idle/Rated switch. Turn the signal generator and governor power on. The voltage across terminals 3 and 4 should measure about 5 Vdc (Start Fuel Limit must be fully clockwise).

5. Set the signal generator for MPU frequency at rated speed. Close the Idle/Rated switch. Set the external speed trim pot (if used) at mid position. Observe the output from terminals 3 and 4.

   a. If the output is at max-fuel position (about 5 Vdc), slowly turn the rated-speed potentiometer counterclockwise until the signal just begins to move to minimum.

   b. If the output is at minimum, slowly turn the rated-speed potentiometer clockwise until the signal just begins to move to maximum.

   Continue to adjust the rated-speed pot very slowly, trying to stop the signal between minimum and maximum. Stop adjusting when the signal moves slowly. It will not be possible to stop the motion. The rated-speed reference is now set very close to desired speed.

6. Open the Idle/Rated switch. Set the signal generator for MPU frequency at idle speed. (Preset the idle speed only after presetting rated speed.)

   a. If the signal is at maximum-fuel position, slowly turn the idle-speed potentiometer counterclockwise until the signal begins to move to minimum.

   b. If the signal is at minimum, slowly turn the idle-speed potentiometer clockwise until the signal just begins to move to maximum.

7. Continue to adjust the idle-speed pot very slowly, trying to stop the signal between minimum and maximum. Stop adjusting when the signal moves slowly. It will not be possible to stop the signal. The idle-speed reference is now set very close to desired idle speed.

Katolight Service - Master Repair Manual - Page 2836

8. **If a signal generator is not available,** turn the rated speed pot fully counterclockwise. Turn the idle-speed pot fully clockwise. Remove the MPU wires from the speed control and measure between 85 and 300 Ω resistance across the MPU wires. If the resistance is correct replace the connection.

Initial Pre-Start Settings

1. Rated Speed: If RATED SPEED was not set with a signal generator, set the RATED SPEED potentiometer to minimum (fully counterclockwise). Set the external speed trim, if used, to mid-position.

2. Stability: Set the RATED and IDLE STABILITY potentiometers to mid position.

3. Gain: Set the RATED and IDLE GAIN potentiometers to mid position.

4. Idle Speed: If IDLE SPEED was not set with a signal generator, set the IDLE SPEED potentiometer at maximum (fully clockwise).

5. Start Fuel Limit: Set the START FUEL LIMIT pot at mid point (maximum is fully clockwise).

6. Close the circuit between terminals 9 and 10 (Close for Rated).

Start-up Adjustments

1. Prepare to start the engine. Read this entire chapter before attempting to start the engine. Interrelated problems can occur, and an understanding of all possibilities is needed before using a control for the first time.

   In case the newly installed Flo-Tech Speed Control does not control engine speed, be prepared to: 1) remove the power from the control with the switch between the battery and terminal 1; and 2) initiate emergency shutdown procedures including manually shutting off the fuel supply.



WARNING
TO PROTECT AGAINST POSSIBLE INJURY, LOSS OF LIFE, and/or PROPERTY DAMAGE WHEN STARTING the engine, turbine, or other type of prime mover, BE PREPARED TO MAKE AN EMERGENCY SHUTDOWN to protect against runaway or overspeed should the mechanical-hydraulic governor(s), fuel control(s), the driving mechanism(s), the linkage(s), or the control device(s) fail.

Katolight Service - Master Repair Manual - Page 2837

Adjust for Stable Operation

Read the following paragraphs before attempting initial engine start up. Dynamics must be quickly adjusted after initial start up.

Immediately after the initial start up, it will be necessary to adjust the governor for stable operation. Idle and Rated dynamics are completely separate. The adjustments must be made according to the dynamics selected. In most cases the idle speed has been preset at maximum (fully clockwise) and Rated Speed is selected. In many cases the selection of rated speed will not indicate a desire for rated dynamics, which will be used when the engine is loaded. Idle dynamics may be selected and adjusted while rated speed is selected.

If the engine is hunting at a rapid rate, slowly decrease the GAIN (turn the potentiometer counterclockwise) until performance is stable.

If the engine is hunting at a slow rate, increase the STABILITY (turn the potentiometer clockwise) until the engine stabilizes. If increasing the STABILITY potentiometer does not stabilize the engine, it also may be necessary to slowly decrease the GAIN (turn the potentiometer counterclockwise).

1. Start cranking the engine. If the signal from terminals 3 and 4 does not show a positive voltage (2 to 6 Vdc) check the MPU.

   Minimum voltage required from the MPU to operate the electronic control is 1.0 Vrms, measured at cranking speed or the lowest controlling speed. Measure the voltage while cranking with the speed sensor connected to the control. Be sure to prevent the engine from starting. At 5 percent of the lower value of the control's speed range, the failed speed-sensing circuit is cleared. For example 150 Hz is required on the 3000 to 6000 Hz speed range.

   If necessary, increase the Start Fuel Limit (turn clockwise) while cranking until the engine starts. The Start Fuel Limit must be high enough to allow the engine to reach the selected idle or rated speed.

2. If the control increases the engine speed above its cranking speed, the engine should continue to operate at the rated speed. (If the rated speed is too low, it may be necessary to increase the Rated Speed setting slightly by turning the rated-speed pot a little clockwise.) If the engine stops, it indicates a MPU problem. The MPU must produce a minimum of 1 Vac rms to activate the control. Failure to produce the minimum signal can be caused by improper MPU installation, selection of an incorrect gear, improper wiring between the MPU and the control, or a defective MPU.

3. It will be necessary to immediately adjust the control for stable operation after the engine starts. (See Adjust for Stable Operation and Dynamic Adjustment.)

Katolight Service - Master Repair Manual - Page 2838

4. With the engine running and stable, slowly increase the rated-speed setting with the RATED SPEED pot until the desired rated speed is reached.

Dynamic Adjustment

The object of the GAIN and STABILITY potentiometer adjustments is to obtain the optimum, or desired, stable engine-speed response (see Figure 3-1).

Increasing the setting of the GAIN potentiometer provides faster transient response (decreases the amount of speed change from a sudden change in load). To achieve the best response, slowly increase the GAIN (turn the potentiometer clockwise) until the engine becomes slightly unstable, then slowly turn the GAIN back counterclockwise as necessary to stabilize engine speed.

Step load the engine to make sure the engine returns to the proper speed with little overshoot or undershoot of the speed setting. (To reduce overshoot, increase the STABILITY setting by turning the potentiometer clockwise).

Increasing the STABILITY clockwise will require decreasing the GAIN (turning the GAIN potentiometer counterclockwise) to maintain stable operation.

If the engine is slow in returning to the proper speed, decrease the STABILITY by turning the potentiometer counterclockwise.

Figure 3-1 illustrates engine starts with no ramp or capacitor connected to the control, step loadings at four different STABILITY potentiometer settings, and stable, steady-state running conditions. These are typical performance curves on a naturally-aspirated (not turbocharged) diesel engine.

Optimum performance is not necessarily obtained with the GAIN potentiometer at the maximum stable clockwise position. In some cases, the gain must be reduced slightly to ensure stability under widely varying conditions.

5. LOW IDLE SPEED ADJUSTMENT: The engine should be at rated speed with the IDLE SPEED potentiometer set at maximum (fully clockwise). Open the external CLOSE FOR RATED contact.

6. Decrease the IDLE SPEED (turn the potentiometer counterclockwise) until the desired idle speed is reached. It may be necessary to adjust the idle dynamics to maintain stability as speed is lowered.

Katolight Service - Master Repair Manual - Page 2839

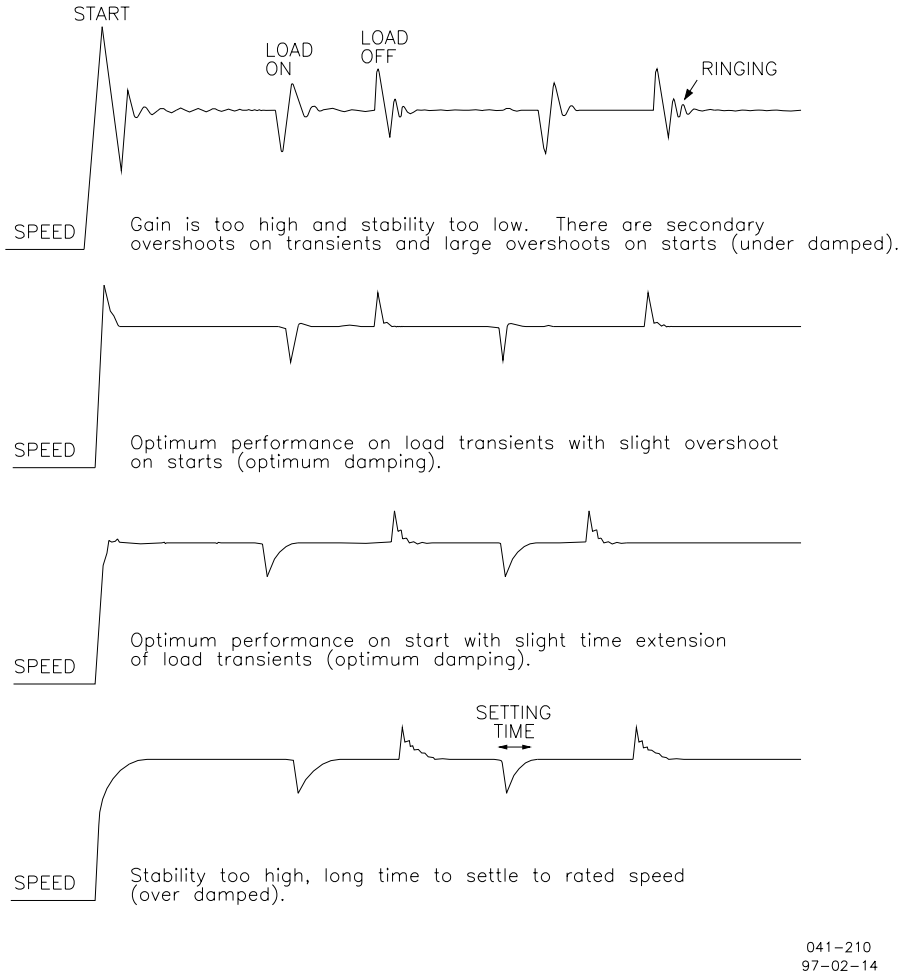

Figure 3-1. Diesel Engine Response Curves

7. If idle dynamics were selected on initial start-up, it will now be necessary to set rated dynamics. Load the engine, then select rated dynamics. Adjust for stable but active response as was done with the idle dynamics. The idle dynamics will provide stable operation of a loaded engine, but will not provide optimum response to load changes. If the rated dynamics are set for optimum engine performance when the engine is loaded, the engine should not be stable when unloaded unless the idle dynamics are selected. Rated dynamics are normally set with the engine at operating speed.

   Engine response will change as the engine warms up. It may be necessary to tune dynamics after warm-up. It may be necessary to compromise optimum control dynamics with a cold engine in order to have optimum dynamics when the engine is at operating temperature.

Katolight Service - Master Repair Manual - Page 2840

Start Fuel Limit

1. The START FUEL LIMIT was set at a point that allowed the cold engine to start during initial start up procedures. If START FUEL LIMIT is to be used, it should now be adjusted after engine stability and response rates are correctly adjusted.

2. Adjusting the START FUEL LIMIT counterclockwise will prevent the fuel valve from delivering a maximum amount of fuel to the injectors until the selected speed (Idle or Rated) is reached. Adjust for desired engine performance during start up. The Start Fuel Limit must be set high enough to allow the engine to reach the selected speed.

3. The Start Fuel Limit should be adjusted from counterclockwise to obtain the desired characteristics while starting the engine. NOTE: There may be differences in startup characteristics of cold and hot engines.

Katolight Service - Master Repair Manual - Page 2841

Katolight Service - Master Repair Manual - Page 2842

Chapter 4
Description of Operation

Introduction

The Woodward Flo-Tech™ Speed Control provides precise speed control of an engine with separate dynamics for stable, responsive engine operation at rated and idle speeds.

Electronic Circuits

All circuits in the Flo-Tech Speed Control are solid state and are not serviceable in the field. The printed circuit board is manufactured by Woodward to provide maximum tolerance to temperature and vibration. Components are wave soldered to the board, and the circuits are computer-tested to assure maximum dependability and accuracy.

Potentiometers, accessible through the control-box case or input through the terminal board, provide all adjustments to the control system. A 10-turn potentiometer provides precise adjustment of the rated-speed setting. One-turn potentiometers provide adjustment for rated speed, fuel limit, idle or unloaded gain and stability, and rated or loaded gain and stability. In addition, the control can be fitted with external potentiometers to set the idle speed and to trim the rated speed from a remote location.

Speed Control

The control converts the signal from the magnetic pickup on the engine into a dc voltage level which is proportional to engine speed. This voltage level is compared to the rated or idle speed setting. After the speed error is modified by GAIN, STABILITY, and SPEED TRIM, the result is sent to a driver that provides 0–200 mA to the Flo-Tech Throttle installed on the engine.

Stability and Gain

The stability and gain adjustments on the Flo-Tech Speed Control allow tailoring of the response rates at idle and at rated speeds to match the engine being controlled.

STABILITY adjustments affect engine reaction time when recovering after a sudden load change. The magnitude of the speed change resulting from a sudden change in load is controlled by the GAIN adjustments.

Katolight Service - Master Repair Manual - Page 2843

Start Fuel Limit

A one-turn pot is available to set a start-fuel limit. The Start Fuel Limit provides a maximum fuel flow until the engine is at idle or rated speed, as selected. When the fuel-limit potentiometer is set fully counterclockwise, the valve will go to a low-fuel position until selected speed is reached. Fuel limiting can prevent smoke during startup, can aid starting on some types of engines, or can be used to prevent excessive overspeed as an engine reaches rated or idle speed. Fuel limit is automatically enabled when the MPU signal falls to zero, and disabled just before the engine reaches idle or rated speed.

Failed Speed Sensor

A safety circuit is included in the Flo-Tech Speed Control to cause the throttle to go to minimum position if the signal from the magnetic pickup is lost. This is protection against loss of control should either the magnetic pickup instrument or the wiring from the magnetic pickup to the control fail. Without this safety circuit, the valve would go to maximum or to the fuel limit should the control lose the magnetic pickup signal.

Auxiliary Input

The auxiliary input is provided to allow the Flo-Tech Speed Control to be used with a load sensor or other auxiliary device such as a process control or SPM-A. A Load Sensor is used with the control for isochronous or electrical droop paralleling. With an isolated bus, isochronous load sharing is usually selected. In isochronous operation, the Load Sensor produces a load signal which is shared with the other Load Sensors on line through the parallel lines. The parallel-line voltage represents the average load of the units on line. By comparing the paralleling-line voltage to its own load, the load sensor calculates an output applied to the auxiliary input of the Flo-Tech control. This output raises or lowers, as necessary, the generator output to make the load of its unit equal to the average load. The load-sensor output directly biases the speed-loop circuit of the speed control to affect the fuel-level setting and precisely maintain its proportional share of system load while maintaining a fixed frequency.

Ramp Generator

A Ramp Generator may be attached to terminals 10 (+) and 2 (–) to slow the speed change between idle and rated speeds. Once set, it provides a constant speed change per second by biasing the speed reference when changing from idle to rated and vice versa. Accel and Decel pots on the ramp generator control the rate of change.

Katolight Service - Master Repair Manual - Page 2844

A capacitor can be connected between terminals 10 and 2 to provide a non-linear ramp between idle and rated and between rated and idle. This method provides the same rate for both acceleration and deceleration, about one second of ramp time per 50 TF of capacitance (200 TF maximum). The capacitor must be 15 Vdc minimum working voltage with less than 30 TA dc leakage over the operating temperature range.

Speed Trim

A potentiometer can be installed to terminals 9 (counterclockwise) and 10 (clockwise and wiper) to provide remote trim of rated speed. A 1 kA potentiometer will provide ±2.5 percent change of rated speed. A 2 kA potentiometer will provide ±5 percent change in rated speed. The control is not subject to temperature drift, and the potentiometer for remote speed trim is not usually needed in a single-engine application.

Katolight Service - Master Repair Manual - Page 2845

Katolight Service - Master Repair Manual - Page 2846

Chapter 5
Troubleshooting

Introduction

Improper engine operation is often the result of factors other than governor operation. The following paragraphs are provided to give tips about engine problems which can resemble governor problems. Make sure the engine is operating correctly before making any changes in the governor.

Attempting to correct engine or load problems with untimely governor adjustment can add to the problems involved with solving improper operation.

Most governor problems are corrected by carefully repeating the calibration procedure given in the preceding chapter. There are no adjustments available within the valve.

If possible, isolate the governor from the engine to determine if the problem is with the governor and not with the engine or the load on the engine.

Governor system faults are usually caused by problems in the installation. Carefully review all the wiring connections, the power supply, and the Flo-Tech Throttle before making any adjustments to the control box. The throttle valve should be considered as a possible control problem if it was not removed during installation.

Fuel supply, pressure regulators, carburetors, and ignition conditions can present problems which resemble governor problems.

When the Governor is at Fault

Before making any adjustments to the Flo-Tech control review Chapters 3 and 4 to better understand the interrelated workings of the various adjustments and features.

If the engine will not start, the following problems may exist:

The circuit between terminals 9 and 10 is not closed. The governor is in a shutdown mode if this circuit is open. Jumper the two terminals to make sure the idle speed pot, the speed trim pot (if used), or the shutdown switch is not faulty. Inspect the existing jumper if a shutdown switch, idle speed pot, and speed trim pot are not used.

The start fuel limit is preventing adequate air flow.

The 12 or 24 volt supply is not present at terminals 1 and 2.

Katolight Service - Master Repair Manual - Page 2847

Stability Problems

Stability problems not caused by the engine or gas pressure at the carburetor require careful following of the setup procedure provided in Chapter 3. Follow every step when readjusting the control.

If the engine oscillates when cold and stabilizes when warm, make sure that the desired (usually idle) dynamics have been selected. Turn the selected dynamics gain pot slightly counterclockwise. Turn the stability pot slightly clockwise if required to maintain stability.

Magnetic Pickup

The MPU must provide a minimum pulse signal of 1 volt to the control . It is highly unusual for an MPU to fail if it is properly installed. The most common failure is due to the pickup being screwed in too far and hitting the gear it is sensing. If the MPU does not produce the required signal, check the installation to make sure it is properly located on the sensed wheel. If the MPU is not close enough to the sensed gear it will not produce an adequate signal.

Several different sizes of MPUs are available to fit different size gears.

Check that the gear is of magnetic material, necessary to drive the MPU. Check the wiring from the MPU to the control.

Refer to Manual 82510 *Magnetic Pickups and Proximity Switches for Electric Governors* for more information about required gear shapes, sizes, and surface speeds.

Note that the MPU generates a voltage signal when a tooth of the sensed gear breaks the magnetic field emitted from the tip of the pickup. The pickup does not require an excitation voltage from the control.

Katolight Service - Master Repair Manual - Page 2848

Chapter 6
Service Options

Product Service Options

The following factory options are available for servicing Woodward equipment, based on the standard Woodward Product and Service Warranty (5-01-1205) that is in effect at the time the product is purchased from Woodward or the service is performed:

- Replacement/Exchange (24-hour service)
- Flat Rate Repair
- Flat Rate Remanufacture

If you are experiencing problems with installation or unsatisfactory performance of an installed system, the following options are available:

- Consult the troubleshooting guide in the manual.
- Contact Woodward technical assistance (see "How to Contact Woodward" later in this chapter) and discuss your problem. In most cases, your problem can be resolved over the phone. If not, you can select which course of action you wish to pursue based on the available services listed in this section.

Replacement/Exchange

Replacement/Exchange is a premium program designed for the user who is in need of immediate service. It allows you to request and receive a like-new replacement unit in minimum time (usually within 24 hours of the request), providing a suitable unit is available at the time of the request, thereby minimizing costly downtime. This is also a flat rate structured program and includes the full standard Woodward product warranty (Woodward Product and Service Warranty 5-01-1205).

This option allows you to call in the event of an unexpected outage, or in advance of a scheduled outage, to request a replacement control unit. If the unit is available at the time of the call, it can usually be shipped out within 24 hours. You replace your field control unit with the like-new replacement and return the field unit to the Woodward facility as explained below (see "Returning Equipment for Repair" later in this chapter).

Charges for the Replacement/Exchange service are based on a flat rate plus shipping expenses. You are invoiced the flat rate replacement/exchange charge plus a core charge at the time the replacement unit is shipped. If the core (field unit) is returned to Woodward within 60 days, Woodward will issue a credit for the core charge. [The core charge is the average difference between the flat rate replacement/exchange charge and the current list price of a new unit.]

Katolight Service - Master Repair Manual - Page 2849

Return Shipment Authorization Label. To ensure prompt receipt of the core, and avoid additional charges, the package must be properly marked. A return authorization label is included with every Replacement/Exchange unit that leaves Woodward. The core should be repackaged and the return authorization label affixed to the outside of the package. Without the authorization label, receipt of the returned core could be delayed and cause additional charges to be applied.

Flat Rate Repair

Flat Rate Repair is available for the majority of standard products in the field. This program offers you repair service for your products with the advantage of knowing in advance what the cost will be. All repair work carries the standard Woodward service warranty (Woodward Product and Service Warranty 5-01-1205) on replaced parts and labor.

Flat Rate Remanufacture

Flat Rate Remanufacture is very similar to the Flat Rate Repair option with the exception that the unit will be returned to you in "like-new" condition and carry with it the full standard Woodward product warranty (Woodward Product and Service Warranty 5-01-1205). This option is applicable to mechanical products only.

Returning Equipment for Repair

If a control (or any part of an electronic control) is to be returned to Woodward for repair, please contact Woodward in advance to obtain a Return Authorization Number. When shipping the item(s), attach a tag with the following information:

- name and location where the control is installed;
- name and phone number of contact person;
- complete Woodward part number(s) and serial number(s);
- description of the problem;
- instructions describing the desired type of repair.



CAUTION
To prevent damage to electronic components caused by improper handling, read and observe the precautions in Woodward manual 82715, *Guide for Handling and Protection of Electronic Controls, Printed Circuit Boards, and Modules*.

Katolight Service - Master Repair Manual - Page 2850

Packing a Control

Use the following materials when returning a complete control:

- protective caps on any connectors;
- antistatic protective bags on all electronic modules;
- packing materials that will not damage the surface of the unit;
- at least 100 mm (4 inches) of tightly packed, industry-approved packing material;
- a packing carton with double walls;
- a strong tape around the outside of the carton for increased strength.

Return Authorization Number

When returning equipment to Woodward, please telephone and ask for the Customer Service Department [1 (800) 523-2831 in North America or +1 (970) 482-5811]. They will help expedite the processing of your order through our distributors or local service facility. To expedite the repair process, contact Woodward in advance to obtain a Return Authorization Number, and arrange for issue of a purchase order for the item(s) to be repaired. No work can be started until a purchase order is received.

NOTE

We highly recommend that you make arrangement in advance for return shipments. Contact a Woodward customer service representative at 1 (800) 523-2831 in North America or +1 (970) 482-5811 for instructions and for a Return Authorization Number.

Replacement Parts

When ordering replacement parts for controls, include the following information:

- the part number(s) (XXXX-XXX) that is on the enclosure nameplate;
- the unit serial number, which is also on the nameplate.

Katolight Service - Master Repair Manual - Page 2851

How to Contact Woodward

In North America use the following address when shipping or corresponding:

Woodward Governor Company
PO Box 1519
1000 East Drake Rd
Fort Collins CO 80522-1519, USA

Telephone—+1 (970) 482-5811 (24 hours a day)
Toll-free Phone (in North America)—1 (800) 523-2831
Fax—+1 (970) 498-3058

For assistance outside North America, call one of the following international Woodward facilities to obtain the address and phone number of the facility nearest your location where you will be able to get information and service.

Facility	Phone Number
Australia	+61 (2) 9758 2322
Brazil	+55 (19) 3708 4800
India	+91 (129) 523 0419
Japan	+81 (476) 93-4661
The Netherlands	+31 (23) 5661111

You can also contact the Woodward Customer Service Department or consult our worldwide directory on Woodward's website (**www.woodward.com**) for the name of your nearest Woodward distributor or service facility. [For worldwide directory information, go to **www.woodward.com/ic/locations**.]

Engineering Services

Woodward Industrial Controls Engineering Services offers the following after-sales support for Woodward products. For these services, you can contact us by telephone, by e-mail, or through the Woodward website.

- Technical Support
- Product Training
- Field Service

Contact information:

Telephone—+1 (970) 482-5811
Toll-free Phone (in North America)—1 (800) 523-2831
E-mail—icinfo@woodward.com
Website—**www.woodward.com/ic**

Katolight Service - Master Repair Manual - Page 2852

Technical Support is available through our many worldwide locations or our authorized distributors, depending upon the product. This service can assist you with technical questions or problem solving during normal business hours. Emergency assistance is also available during non-business hours by phoning our toll-free number and stating the urgency of your problem. For technical support, please contact us via telephone, e-mail us, or use our website and reference ***Customer Services*** and then ***Technical Support***.

Product Training is available at many of our worldwide locations (standard classes). We also offer customized classes, which can be tailored to your needs and can be held at one of our locations or at your site. This training, conducted by experienced personnel, will assure that you will be able to maintain system reliability and availability. For information concerning training, please contact us via telephone, e-mail us, or use our website and reference ***Customer Services*** and then ***Product Training***.

Field Service engineering on-site support is available, depending on the product and location, from one of our many worldwide locations or from one of our authorized distributors. The field engineers are experienced both on Woodward products as well as on much of the non-Woodward equipment with which our products interface. For field service engineering assistance, please contact us via telephone, e-mail us, or use our website and reference ***Customer Services*** and then ***Technical Support***.

Katolight Service - Master Repair Manual - Page 2853

Technical Assistance

If you need to telephone for technical assistance, you will need to provide the following information. Please write it down here before phoning:

General

Your Name_____
Site Location_____
Phone Number_____
Fax Number_____

Prime Mover Information

Engine/Turbine Model Number_____
Manufacturer_____
Number of Cylinders (if applicable)_____
Type of Fuel (gas, gaseous, steam, etc)_____
Rating_____
Application_____

Governor Information

Please list all Woodward governors, actuators, and electronic controls in your system:

Woodward Part Number and Revision Letter
_____
Control Description or Governor Type
_____
Serial Number_____

Woodward Part Number and Revision Letter
_____
Control Description or Governor Type
_____
Serial Number_____

Woodward Part Number and Revision Letter
_____
Control Description or Governor Type
_____
Serial Number_____

If you have an electronic or programmable control, please have the adjustment setting positions or the menu settings written down and with you at the time of the call.

Katolight Service - Master Repair Manual - Page 2854

WOODWARD
Industrial Controls

00149-04-EUR-02-01

DECLARATION OF CONFORMITY

According to EN 45014

Manufacturer's Name:	WOODWARD GOVERNOR COMPANY (WGC) Industrial Controls Group
Manufacturer's Address:	1000 E. Drake Rd. Fort Collins, CO, USA, 80525
Model Name(s)/Number(s):	EPG 12V 8290-187 and similiar EPG 24V 8290-185 and similiar
Conformance to Directive(s):	89/336/EEC COUNCIL DIRECTIVE of 03 May 1989 on the approximation of the laws of the Member States relating to electromagnetic compatibility.
Applicable Standards:	EN61000-6-2, 2001: EMC Part 6-2: Generic Standards - Immunity for Industrial Environments EN61000-6-4, 2001: EMC Part 6-4: Generic Standards - Emissions for Industrial Environments

We, the undersigned, hereby declare that the equipment specified above conforms to the above Directive(s).

MANUFACTURER

Signature
Jennifer R Williams

Full Name
Jennifer R. Williams

Position
Engineering Manager

Place
WIC, Fort Collins, CO, USA

Date
7-25-02.

We appreciate your comments about the content of our publications.

Send comments to: icinfo@woodward.com

Please include the manual number from the front cover of this publication.

Woodward/Industrial Controls
PO Box 1519, Fort Collins CO 80522-1519, USA
1000 East Drake Road, Fort Collins CO 80525, USA
Phone +1 (970) 482-5811 • Fax +1 (970) 498-3058

E-mail and Home Page—www.woodward.com

FM 57982
BS EN ISO 9001:1994
6 March 2001

**Woodward has company-owned plants, subsidiaries, and branches,
as well as authorized distributors and other authorized service and sales facilities throughout the world.**

Complete address/phone/fax/e-mail information for all locations is available on our website.

02/8/F

DESCRIPTION

The Katolight electronic control system consists of electronically controlled unit injectors, engine sensors, engine control unit (ECU) and engine wiring harnesses. The ECU is the box that contains the computer and most other electronic components needed to operate the system. The ECU's primary job is scheduling an accurately timed pulse to each injector so that a controlled fuel quantity is injected into the cylinder at the correct crank angle.

STANDARD FEATURES

- The Katolight JDEC includes a special push button adjustable 2-state throttle feature that allows variable speed operation without a mechanical or potentiometer throttle
- Up to two potentiometer throttles can be added if desired
- The adjustable 2-state throttle feature can be used to easily preset maximum and minimum allowable operating speed when using a potentiometer throttle
- The auto-cal feature eliminates the need for manual adjustment of analog throttles
- Built in protection is provided to prevent abuse of the power-bulge feature
- Automatic engine protection shutdown can be specified for low oil pressure, high coolant temperature, and any desired user selectable input (loss of prime, machine hydraulic temperature, etc.) eliminating the need for a separate magnetic shutdown switch
- A new RE68155 2-inch digital diagnostic gauge displays diagnostic codes and warnings, engine hours, rpm, oil pressure, coolant temperature, system voltage, and many other engine parameters. It also includes "Warning" and "Stop Engine" lights
- Additional gauge displays can be driven from the RE68155 diagnostic gauge to provide analog displays of rpm, oil pressure, coolant temperature, system voltage, % load, etc.
- Standard user-selectable 12V backlighting is provided (optional adapter required for 24-Volt units)

SPECIFICATIONS

Governor Operations

The all speed governor can be set for either normal droop or isochronous operation. Normal droop, the default, gives a drop in engine speed with an increase in load or an increase in engine speed with a decrease in load. The normal % droop for your engine will be listed in the Katolight owner/operator manual and on the engine performance curve. When isochronous governing is selected the droop is set to 0%, and there is no change in engine speed with changing loads until the engines torque limit is reached.

Self Diagnostics

The ECU will detect failures within the control system including sensors, actuators and the ECU itself. The ECU monitors the engine fuel, coolant, and oil pressure sensors for out-of-range values or erratic operation.

Engine Diagnostics

The ECU can detect abnormal engine operating conditions or faults in several engine systems. Faults are

stored in the ECU for later use by service personnel. Drivers are provided for an amber “warning” light and a red “shutdown” light. Amber and Red lights are also incorporated into the Diagnostic Gauge.

Low Oil Pressure Protection

There are two low oil protection features, Low Oil Pressure WARNING and Low Oil Pressure SHUT-DOWN. The set points for Low Oil Pressure WARNING and SHUTDOWN are variable based on engine speed. At the Low Oil Pressure WARNING set point, the ECU turns on the warning lamp and starts a gradual power derate. If the oil pressure goes above the Low Oil Pressure WARNING set point during that time, power increases gradually until the power is back to full power. The warning lamp will stay on until the power returns to normal even if the fault condition has gone away and the recovery is in process. At Low Oil Pressure SHUTDOWN set point the ECU turns on a shutdown lamp and starts a more rapid power derate. If the oil pressure does not go above the SHUTDOWN set point within 30 seconds, the engine will shutdown. If oil pressure goes above Low Oil Pressure SHUTDOWN set point within 30 seconds, power derate reverts to the Low Oil Pressure WARNING curve. Shutdown will only occur on systems with the shutdown option enabled.

Coolant Temperature Protection

There are two Coolant Temperature protection features, High Coolant Temperature WARNING, and High Coolant Temperature SHUTDOWN. If coolant temperature exceeds the maximum allowable level the ECU turns on the warning lamp and starts a gradual power derate. If the coolant temperature goes below the High Coolant Temperature WARNING set point, power increases gradually until the power is back to full power. The warning lamp will stay on until the power returns to normal even if the fault condition has gone away and the recovery is in process. At High Coolant Temperature SHUTDOWN set point the ECU turns on the shutdown lamp and starts an additional power derate. If the coolant temperature does not go below the SHUTDOWN set point within 30 seconds, the engine will shutdown. If coolant temperature goes below High Coolant Temperature SHUTDOWN set point within 30 seconds, power derate reverts to High Coolant Temperature WARNING curve.

Engine Protection

The ECU can detect several types of engine problems and may take actions to minimize engine damage that may result if these problems are not corrected. There are two levels of engine problems, “Warning” and “Shutdown”. “Warning” faults are engine problems that may lead to engine failures if not corrected. “Warning” faults include higher than normal fuel temperature, lower than normal oil pressure, higher than normal coolant temperatures, higher than normal change air temperatures, or power derates. “Shutdown” faults are engine problems that indicate imminent engine failure. “Shutdown” problems included extremely low oil pressure, extremely high coolant temperatures, and loss of coolant. The “Warning” lamp will be on when a “Warning” fault is detected by the ECU and the “Shutdown engine” lamp will be on when a “Shutdown” fault is detected.

No Protection

Engine ECU’s with “No Protection” do not derate the engine when coolant temperature, oil pressure, or charge-air temperature “Warning” faults are detected and do not shutdown the engine when there is a “Shutdown” fault. The “Warning” lamp lights when a “Warning” fault is detected by the ECU and the “Shutdown engine” lamp lights when a “Shutdown” fault is detected. The engine operator is responsible for reducing engine speed and power when a “Warning” fault exists and for shutting down the engine when a “Shutdown” fault exists. If engine coolant temperature and oil pressure sensors are not installed

on engines with “No Protection” ECU’s, no fault will be detected and the fault light will not light. “No Protection” ECU’s can not warn of a broken or disconnected wire in the coolant temp and oil pressure sensor circuit. The other ECU’s can detect this failure.

Derate Protection without Shutdown

The engine derate protection feature is only in ECU’s with engine derate protection programmed into the ECU. All engine protection sensors including coolant temperature and oil pressure must be installed if engine protection is specified. Otherwise, a fault will be detected, and the fault lamp will light. The engine derate schedules will be active but the engine will not shutdown if a “Shutdown” fault is detected. The “Warning” lamp lights when a “Warning” fault is detected by the ECU and the “Shutdown engine” lamp lights when a “Shutdown” fault is detected. The engine operator is responsible for shutting down an engine with a “Shutdown” fault.

Shutdown without Derate Protection

The engine shutdown feature is only in ECU’s with engine shutdown programmed into the ECU. All engine protection sensors, including coolant temperature and oil pressure, must be installed if engine protection is specified. Otherwise, a fault will be detected and the fault lamp will light. The engine derate schedules will not be active but the engine will shutdown in 30 seconds if a “Shutdown” fault is detected. The “Warning” lamp lights when a “Warning” fault is detected by the ECU. The “Shutdown engine” lamp will be on for 30 seconds before shutting down when a “Shutdown” fault is detected. The operator may delay a shutdown for 30 seconds by pushing a “Shutdown Override” button. On an ECU with the Shutdown feature, shutting down the engine and turning “off” the key switch will reset the engine Shutdown feature and will allow at least 30 seconds of running after restart. After 30 seconds, the engine will again shutdown unless the “Shutdown” fault condition has cleared. The “Shutdown Override” switch resets the shutdown timer to 30 seconds, and may be used repeatedly. However, continuously holding down the “Shutdown Override” switch will only reset the 30-second timer once. It must be released and repressed to reset for another 30 seconds.

Derate Protection with Shutdown

The engine derate and shutdown feature is only in ECU’s with engine derate and shutdown protection programmed into the ECU. All engine protection sensors, including coolant temperature and oil pressure, must be installed if engine protection is specified. Otherwise, a fault will be detected, and the fault lamp will light. The engine derate schedules will be active and the engine will shutdown in 30 seconds if a “Shutdown” fault is detected. The “Warning” lamp lights when a “Warning” fault is detected by the ECU. The “Shutdown engine” lamp will be on for 30 seconds before shutting down when a “Shutdown” fault is detected. The operator may delay a shutdown for 30 seconds by pushing a “Shutdown Override” button. On an ECU with the shutdown feature, shutting down the engine and turning “off” the key switch will reset the engine Shutdown feature and will allow al least 30 seconds of running after restart. After 30 seconds, the engine will again shutdown unless the “Shutdown” fault condition has cleared. The “Shutdown Override” switch resets the shutdown timer to 30 seconds, and may be used repeatedly. However, continuously holding down the “Shutdown Override” switch will only reset the 30-second timer once. It must be released and repressed to reset for another 30 seconds.

Derate Protection with Shutdown

The engine derate and shutdown feature is only in ECU's with engine derate and shutdown protection programmed into the ECU. All engine protection sensors, including coolant temperature and oil pressure, must be installed if engine protection is specified. Otherwise, a fault will be detected, and the fault lamp will light. The engine derate schedules will be active and the engine will shutdown in 30 seconds if a "Shutdown" fault is detected. The "Warning" lamp lights when a "Warning fault is detected by the ECU. The "Shutdown engine" lamp will be on for 30 seconds before shutting down when a "Shutdown" fault is detected. The operator may delay a shutdown for 30 seconds by pushing a "Shutdown Override" button. On an ECU with the shutdown feature, shutting down the engine and turning "off" the key switch will reset the engine shutdown feature and will allow at least 30 seconds of running after restart. After 30 seconds, the engine will again shutdown unless the "Shutdown" fault condition has cleared. The "Shutdown Override" switch resets the shutdown timer to 30 seconds, and may be used repeatedly. However, continuously holding down the "Shutdown Override" switch will only reset the 30-second timer once. It must be released and repressed to reset for another 30 seconds.

External Derate and Shutdown Inputs

Two additional inputs are provided for external derates and shutdown. These inputs can be used to allow the OEM to trigger a 20% reduction in engine power or an engine shutdown from external switches, such as a loss of prime switch or hydraulic overtemperature switch. These switches are active on all ECU's, even if "No Protection" is specified. If the user doesn't wish to use this feature, the wires should be left disconnected.

Service Diagnostics

Fault codes generated by the ECU are stored for later retrieval through the Diagnostic Gauge.

Fuel Temperature Compensation

Fuel temperature compensation provides constant power regardless of fuel temperature.

Materials and specifications subject to change without notice.
© Katolight Corporation. 100 Power Drive, Mankato, MN 56001

Electronic Engine Controls -- JDEC (4.5 L / 6.8 L); DE10

Contents / Notes

Page

John Deere Electronic Control (JDEC 4.5 L / 6.8 L; DE10) System Diagram ..... AG-11-DE10 - 03
Introduction ..... AG-11-DE10 - 04
Features ..... AG-11-DE10 - 05
- Engine Diagnostics and Engine Protection .....
  - Engine Protection ..... AG-11-DE10 - 06
    - No Protection .....
    - Engine Derate Protection .....
    - Engine Shutdown Protection .....
    - Shutdown Override Control .....
  - Low Oil Pressure ..... AG-11-DE10 - 07
  - Coolant Temperature .....
  - High Charge Air Temperature .....
  - High Fuel Temperature .....
  - External Derate and Shutdown Inputs .....
  - Blink-Code Diagnostics .....
  - RE68155 Diagnostic Gauge ..... AG-11-DE10 - 08
- Remote On / Off Control .....
- Intake Heater Controls .....
- Throttle Options .....
  - Analog (Potentiometer) Throttles .....
  - Digital RampThrottle ..... AG-11-DE10 - 09
  - Digital 2-state (Non-adjustable) Throttle .....
  - Digital 3-state (Adjustable) Throttle .....
- Cruise Control ..... AG-11-DE10 - 10
- Selectable Governor Regulation .....
  - Governor Settings for Gen-Sets ..... AG-11-DE10 - 11
- Controller Area Network (CAN) ..... AG-11-DE10 - 12

Basic Installation .....
- Power and Ground Connections .....
- Starter Relay ..... AG-11-DE10 - 13

Continued - -

Katolight Service - Master Repair Manual - Page 2861

Electronic Engine Controls -- JDEC (4.5 L / 6.8 L); DE10

Contents / Notes

Page

Instrumentation and Controls Wiring ..... AG-11-DE10 - 13
- Using a Prepackaged John Deere Instrument Panel .....
  - Full-featured Instrument Panel (RE162429) Standard Features ..... AG-11-DE10 - 14
  - Full-featured Instrument Panel (RE162429) Optional Features .....
  - Basic Instrument Panel (RE516508) ..... AG-11-DE10 - 15
- Using the RE508625 Instrumentation and Wiring Kit .....
- Making Your Own Instrumentation and Controls ..... AG-11-DE10 - 16
  - Minimum Required Wiring ..... AG-11-DE10 - 17
  - Basic Instrumentation and Controls Harness ..... AG-11-DE10 - 19
    - 21-Pin Deutsch Instrument Panel Connector ..... AG-11-DE10 - 20
    - Ignition Switch ..... AG-11-DE10 - 21
    - Analog Throttle Potentiometer ..... AG-11-DE10 - 22
    - Diagnostic Gauge - RE68155 ..... AG-11-DE10 - 30
      - Wiring the Diagnostic Gauge Directly to the 21-Pin Connector .....
      - Using the RE507276 Diagnostic Gauge Adapter Harness ..... AG-11-DE10 - 32
    - Direct Auxiliary Gauge Wiring ..... AG-11-DE10 - 33
    - Using the RE162450 Databus Module ..... AG-11-DE10 - 34
    - Shutdown Override Switch ..... AG-11-DE10 - 37
    - Auxiliary "Warning" Lamp ..... AG-11-DE10 - 38
    - Tachometer Output - Pin K .....
    - Intake Air Heater Wait Lamp ..... AG-11-DE10 - 39
    - 23-Pin (Deutsch) Auxiliary Connector ..... AG-11-DE10 - 40
    - Cruise Control ..... AG-11-DE10 - 42
    - External Stop-Engine Input ..... AG-11-DE10 - 43
    - External Derate Input ..... AG-11-DE10 - 44
    - Isochronous Governor Select .....
    - Secondary Analog Throttle Potentiometer .....
    - Remote On / Off Connector ..... AG-11-DE10 - 45

Manufacturing a Complete Engine Wiring Harness ..... AG-11-DE10 - 46

Reference Information ..... AG-11-DE10 - 47

Katolight Service - Master Repair Manual - Page 2862

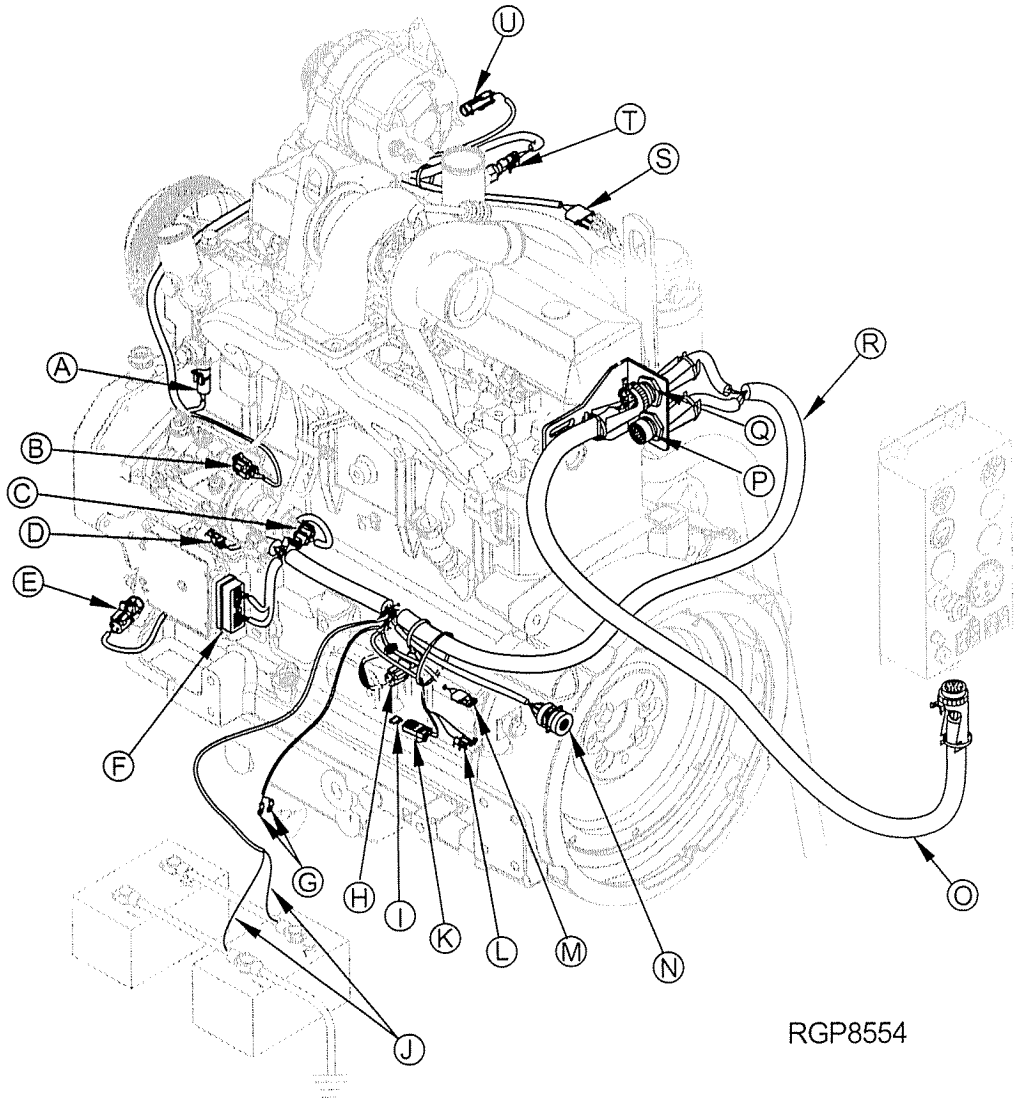

RGP8554

A. Coolant Temperature Sensor Connector
B. Fuel Temperature Sensor Connector
C. Injection Pump Solenoid Connector
D. SAE 1939 CAN Connector
E. Crank Position Sensor Connector
F. ECU Connector
G. Starter Relay Connector
H. Oil Pressure Sensor Connector
I. Main System Fuse (10 amp)
J. Power and Ground Battery Connections
K. Fuse Holder
L. Transient Voltage Protection (TVP) Module Connector
M. Remote ON / OFF Connector
N. CAN Diagnostic Connector
O. Instrument Panel Connector Harness - (RE516537)
P. 23-pin Optional Feature Connector - (Extended-feature ECU only)
Q. 21-pin Instrument Panel Connector
R. Engine Wire Harness
S. Fuel Heater Connector
T. Manifold Air Temperature (MAT) Sensor Connector
U. Alternator Ignition Connector

JOHN DEERE

John Deere Electronic Control System (4.5 L / 6.8 L; DE10)

Katolight Service - Master Repair Manual - Page 2863

INTRODUCTION

The John Deere Electronic Control system used on 4.5 L/6.8 L Tier-2 engines with Stanadyne DE10 fuel injection systems is different than the systems used on 8.1 L and 12.5 L, and 6.8 L engines with VP44 fuel system.

Two levels of DE10 ECU and wiring harness will be available, the standard version and the full-featured version. Both versions will share the same 21-pin instrumentation and controls connector with the larger engines, but not all features will be available with the standard system.

A separate 23-pin optional feature connector will be provided with the full-featured system to provide optional features such as cruise control, selectable isochronus governing, and customer shutdown/warning inputs.

There is no separate performance programming connector on the DE10 wiring harness. Torque curves will not be user-selectable. However, on full-featured ECUs without cruise-control, isochronus governing will be user-selectable. A pin will be provided in the 23-pin optional feature connector that can be connected to battery power to select isochronus governing.

The auxiliary Warning/Stop-Engine lamp driver is also different on the DE10 control systems. On 8.1 L, 12.5 L, and VP44-equipped 6.8 L engines, there are separate auxiliary Warning and Stop-Engine lamp drivers intended for use with separate orange and red lamps. On the DE10 control systems (standard and full-featured), there is only one Warning/Stop-Engine lamp driver. It operates a single lamp that flashes for Warning-type faults, and glows steadily for Stop-Engine type faults.

The orange Warning and red Stop-Engine LEDs on the RE68155 diagnostic gauge will still function normally when used with either DE10 control system. The single-lamp system only applies to the auxiliary warning lamp, if used.

The oil pressure sensor, which is standard on 8.1 L and 12.5 L engines, is optional on the DE10 system. The oil pressure sensor must be specified on ECUs with automatic shutdown protection.

Standard DE10 Control System

The following features are active on the standard DE10 control system:

- 2-position throttle switch
- Shutdown system with override switch
- Intake heater activation system with wait-lamp
- CAN-based instrumentation system
- Blink-code diagnostic system
- Single auxiliary Warning/Stop-Engine lamp driver
- Analog tachometer drive

The standard DE10 control system will not have:

- Analog throttle capability
- Adjustable 2-state throttle capability
- Switchable isochronus governing
- Cruise control capability
- Remote on/off control plug
- Separate Warning and Stop Engine lamp drivers
- Customer warning or stop engine inputs
- Loss of coolant input.

Extended-feature DE10 Control System

The optional extended-feature DE10 control system will have all of the same features as the control systems used on 8.1 L, 12.5 L, or VP44-equipped 6.8 L engines, except:

- No separate loss of coolant input
- No remote cruise control station capability
- External derate input and switchable isochronus governor will not be available on ECUs with cruise control
- No separate Warning and Stop Engine lamp drivers

Katolight Service - Master Repair Manual - Page 2864

Instrument Panels

Like the VP44 system used on higher powered 6.8 L engines, the standard DE10 system can be used with or without CAN-based instrumentation.

The DE10 control system can be used with the same RE508625 instrument panel and RE508625 instrumentation and wiring kit used on the larger engines. However, with the standard system the fixed 2-state throttle switch will be the only functional speed control. The analog throttle, bump switch and bump-enable switches will not be active on the standard system. All instrument panel features will work with the extended-feature DE10 system.

A less expensive CAN-based control panel, without bump or bump-enable switches or analog throttle wiring will also be made available. The less expensive panel will include the diagnostic gauge with digital display of all engine operating parameters, but it will not include separate analog tach, oil pressure, and coolant temperature displays.

Engine-mounted ECUs and Wiring Harness

All DE10 ECUs will be engine-mounted. The wiring harness for the standard system and for the extended-feature system will both be terminated on the engine.

FEATURES

Engine Diagnostics and Engine Protection

The ECU can detect abnormal engine operating conditions or faults in several engine systems. Faults are stored in the ECU for later use by service personnel, and are reported to the operator with a Fault Lamp.

The ECU can detect several types of engine problems and may take actions to minimize engine damage that may result if these problems are not corrected. There are two levels of engine problems, "Warning" and "Shutdown."

"Warning" faults are engine problems that may lead to engine failures if not corrected. "Warning" faults include higher-than-normal coolant temperatures and higher-than-normal charge air temperatures. The amber "warning" LED on the standard instrument panel illuminates when a "Warning" problem is detected. On installations that use the separate warning/stop-engine lamp driver instead of CAN-based instrumentation, a flashing light indicates a "Warning" fault.

"Shutdown" faults are engine problems that indicate imminent engine failure. "Shutdown" problems include extremely low oil pressure, extremely high coolant temperatures, loss of coolant, and extremely high fuel temperature. The red "stop-engine" LED on the standard instrument panel illuminates when a "Shutdown" problem is detected. On installations that use the separate warning/stop-engine lamp driver instead of CAN-based instrumentation, a solid light indicates a "Shutdown" fault.

Katolight Service - Master Repair Manual - Page 2865

Katolight Service - Master Repair Manual - Page 2866

ENGINE PROTECTION

Four levels of engine protection are available; no protection, engine derate, engine shutdown, and both engine derate and engine shutdown.

The desired level of protection is selected by option code when the engine is ordered. All levels may not be offered at every power rating. To determine which injection pump / ECU options include engine protection or shutdown features, see the 8300 option group descriptions and Engine Performance Curves.

No Protection

Engine ECU's with "No Protection" do not derate the engine when coolant temperature, oil pressure, or charge-air temperature "Warning" faults are detected, and do not shutdown the engine if a "Shutdown" fault occurs. The "warning" lamp will illuminate (or the warning/stop-engine lamp will flash) when a "Warning" fault is detected by the ECU. The "stop-engine" lamp will illuminate (or the warning/stop-engine lamp will be solid) when a "Shutdown" fault is detected. The engine operator is responsible for reducing engine speed and power when a "Warning" fault exists and for shutting down the engine when a "Shutdown" fault exists.

Engine Derate Protection

The Engine derate feature is only in ECU's with Engine derate programmed into the ECU. All engine protection sensors including fuel temperature, coolant temperature, and oil pressure must be installed if engine derate is specified. Otherwise, a fault will be detected, and the fault lamp will light.

The warning LED will be on (or warning/stop engine lamp will be flashing) when a "Warning" fault is detected by the ECU and the engine will be derated by the ECU. For specific derates, see the following sections.
The Engine Protection feature is only in ECU's with Engine Protection programmed into the ECU. Otherwise, a fault will be detected, and the fault lamp will light.

Engine Shutdown Protection

The Engine Shutdown feature is only in ECU's with Engine Shutdown programmed into the ECU. All engine protection sensors, including coolant temperature and oil pressure must be installed if engine protection is specified. Otherwise, a fault will be detected, and the fault lamp will light.

The engine will shut down in 30 seconds if a "Shutdown" fault is detected. The stop-engine LED will be "ON" (or warning/stop engine lamp will be solid) for 30 seconds before shutting down when a "Shutdown" fault is detected.

Shutdown Override Control

The operator may delay a shutdown for 30 seconds by pushing the "Shutdown Override" button. The "Shutdown Override" switch resets the shutdown timer to 30 seconds, and may be used repeatedly. However, continuously holding down the "Shutdown Override" switch will not reset the 30-second timer.

On an ECU with the Shutdown feature, shutting down the engine by turning the key switch "Off" will reset the engine Shutdown feature and will allow at least 30 seconds of running after restart. After 30 seconds, the engine will again shutdown unless the "Shutdown" fault condition has cleared.

Katolight Service - Master Repair Manual - Page 2867

LOW OIL PRESSURE

The optional oil pressure sensor must be installed for oil pressure protection to function.

There are two low oil protection features, Low Oil Pressure WARNING and Low Oil Pressure SHUTDOWN. The set-points for Low Oil Pressure WARNING and SHUTDOWN are variable based on engine speed, and are preset at the factory.

At the Low Oil Pressure WARNING set-point, the warning LED will illuminate (or warning/stop-engine lamp will flash). On systems with the protection option enabled a slow power derate begins. If the oil pressure goes above the Low Oil Pressure WARNING set point, power slowly increases until the power is back to full power. The fault lamp will continue until the power returns to normal even if the fault condition has gone away and the recovery is in process.

At the Low Oil Pressure SHUTDOWN set-point, the stop-engine LED will illuminate (or warning/stop-engine lamp will be solid). On systems with the protection option enabled, a faster power derate begins. On systems with the shutdown option enabled, if the oil pressure does not go above the SHUTDOWN set-point within 30 seconds, the engine will shutdown. If oil pressure goes above Low Oil Pressure SHUTDOWN set point within 30 seconds, power derate reverts to the Low Oil Pressure WARNING curve.

COOLANT TEMPERATURE

There are two standard coolant temperature features, High Coolant Temperature WARNING, and High Coolant Temperature SHUTDOWN.

At the High Coolant Temperature WARNING set-point, the warning LED will illuminate (or warning/stop-engine lamp will flash). On systems with the protection option enabled a slow power derate begins. If the coolant temperature goes below the High Coolant Temperature WARNING set point, power increases slowly until the power is back to full power. The fault lamp will continue until the power returns to normal even if the fault condition has gone away and the recovery is in process.

At the High Coolant Temperature SHUTDOWN set-point, the stop-engine LED will illuminate (or warning/stop-engine lamp will be solid). On systems with the protection option enabled a faster power derate begins. If the coolant temperature does not go below the SHUTDOWN set-point within 30 seconds, the engine will shutdown. If coolant temperature goes below High Coolant Temperature SHUTDOWN set point within 30 seconds, power derate reverts to the High Coolant Temperature WARNING curve.

HIGH CHARGE AIR TEMPERATURE

If the air temperature in the intake manifold rises above the maximum allowable temperature, the "warning" lamp will illuminate (or warning/stop-engine lamp will flash). On systems with the protection option enabled, a slow power derate begins. If the temperature drops below the allowable maximum while derated, power slowly increases until the power is back to full power. The fault lamp will continue until the power returns to normal even if the fault condition has gone away and the recovery is in process. There is no shutdown function for High Charge Air Temperature. The maximum derate is 20%.

HIGH FUEL TEMPERATURE

Excessive fuel temperature can cause fuel injection system damage. If the fuel temperature rises above a preset "warning" temperature, the warning LED will illuminate (or warning/stop-engine lamp will flash) and the engine will begin to derate. If fuel temperature continues to rise past a preset "shutdown" level, the "stop-engine" lamp will illuminate (or warning/stop-engine lamp will be solid) and derate continues. On ECU's with the shutdown option enabled the engine will shut down in 30 seconds unless temperature returns to normal.

EXTERNAL DERATE AND SHUTDOWN INPUTS (Extended-feature Systems Only)

Two inputs are provided for external derates and shutdown. These inputs can be used to allow the OEM to trigger a 20% reduction in engine power or an engine shutdown from external switches, such as a loss-of-prime switch or hydraulic over-temperature switch. These circuits are active on all ECUs, even if "No Protection" is specified. They derate or shut down the engine immediately. There is no 30-second delay. If the user doesn't wish to use this feature, the wires should be left disconnected.

BLINK-CODE DIAGNOSTICS

Blink-code diagnostics are a standard feature of the JDEC controls for the 4.5 L / 6.8 L Tier-2 engines. All active and stored diagnostic codes can be read through the blink-code system.

Blink code diagnostics are required if an SAE J1939 CAN-based fault code reader such as the John Deere RE68155 diagnostic gauge is not used. If the RE68155 diagnostic gauge or equivalent fault code reader is not provided, the OEM must provide an auxiliary warning/stop-engine lamp and a shutdown override switch, even if he does not intend to use the shutdown override feature.
To activate the blink-code diagnostic system, press the shutdown override switch while turning the key switch ("On"). The customer-installed warning/stop-engine lamp acts as the blink-code display. Instructions for interpreting the blink-code diagnostics are in the operator's manual or component technical manual.

RE68155 DIAGNOSTIC GAUGE

The blink-code diagnostics provide only limited diagnostic information. We strongly recommend the RE68155 Diagnostic Gauge for all applications. The RE68155 Diagnostic Gauge is a complete on-board engine diagnostic and display system. It includes built-in "Warning" and "Stop-engine" lights to alert the operator of problems, and it digitally displays diagnostic codes, rpm, hours, oil pressure, coolant temperature, voltage, engine load, fuel consumption, manifold temperature and other engine parameters.

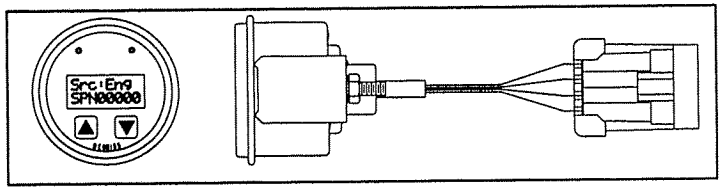

Diagnostic Gauge, RE68155

It can also be used to drive analog gauge displays for rpm, oil pressure, coolant temperature, and many other parameters available on the digital display. The RE68155 diagnostic gauge works with all JDEC control systems. It fits in a standard 2-inch SAE instrument panel opening. It is pre-installed in the RE162429 instrument panel, and included with the RE508625 instrument panel kit.

You can also provide your own SAE J1939-based onboard diagnostic system using the information provided over the SAE J1939 Controller Area Network (CAN) described later in this document.

Remote On / Off Control (Extended-feature Systems Only)

A remote on/off connection has been added to the engine wiring harness that allows the system to be turned on and off with a relay, for use with modem-based computer control systems or remote operator stations. It can also be used for an emergency or remote "kill-switch." This connection is designed to be used in combination with an RE162429 (or equivalent) instrument panel. When the ignition switch on the RE162429 instrument panel is in the "run" position, the remote on/off connection can be used to turn the engine on or off remotely. The key switch in the panel acts as a "lockout." The remote on/off connection only turns the system on and off. It does not activate the starter. A separate remote starter relay control with speed cut-out is required by the OEM if remote-start capability is required.

Intake Heater Controls

The 4.5 L / 6.8 L DE10 JDEC system can be used to automatically turn on an electric intake heater. The ECU can turn on the intake heater whenever the ignition switch is in the "Run" position and the temperature is low enough to require intake heat. The ECU can also operate a "Wait" light. The wait light illuminates at the same time as the intake heater, and stays on until the intake heater has had enough time to heat the intake air adequately to begin cranking.

Throttle Options

Five throttle input options are available on the 4.5 L / 6.8 L DE10 engine. Two are analog (potentiometer) throttles and three are digital throtles. All throttle inputs are additive, which is to say all throttle inputs must be at low idle for the system to operate at low idle, but in most cases any single throttle input can put the system at fast idle.

ANALOG (POTENTIOMETER) THROTTLES (Extended-feature Systems Only)

The two available throttle inputs both can use any 2000-15,000 Ohm potentiometer. Foot and hand throttle assemblies are available from various suppliers including Morse Controls. When both analog throttles are used, the throttle signals are additive, up to the factory preset fast-idle setting. There is no "dead band" in either throttle. When you move the foot throttle, speed immediately increases regardless of where the hand throttle is set.

The secondary analog throttle feature is not intended for use with two throttles located remotely from each other. Since the throttle signal is additive, if either throttle is at the full speed position, the other throttle will have no control. Both throttles must be in the slow-idle position for the engine to operate at slow idle.

Normally, the analog throttles operate between slow idle and fast idle. However, when the adjustable 3-state throttle is used, the analog throttle range is between the adjustable low idle and the adjustable intermediate speed setting.

Katolight Service - Master Repair Manual - Page 2869

DIGITAL RAMP THROTTLE
(Standard and Extended-feature Systems)

A new "Ramp" throttle option is available on all systems. An engine that is equipped with only the Ramp throttle will always start at the factory preset slow idle. After starting, a single rocker switch can be used to bump the speed to any desired operating speed between the factory preset slow idle and fast idle. Each "bump" on the rocker switch results in a 1.6% change in engine speed (in either direction). The actual RPM change will vary depending on the full throttle speed range and may be impacted by the load the engine is carrying at the time of the desired speed adjustment. A "bump" of the rocker switch is defined as pressing the switch for less than 0.2 seconds. When the ramp throttle switch is depressed and held for longer than 0.2 seconds, the throttle will change exponentially until it reaches the end of the speed range in either direction. From low idle, the engine will reach fast idle in approximately 4.5 seconds. When the engine is switched off, the Ramp throttle will return to low idle.

DIGITAL 2-STATE (Non-adjustable) THROTTLE
(Standard and Extended-feature Systems)

A non-adjustable 2-state throttle switch is available on all 4.5 L / 6.8 L DE10 JDEC Systems. The non-adjustable 2-state throttle allows operation at the preset rated speed, or at low idle using a single switch. The 2-state throttle must be set in the "Low Speed" position for the analog throttle to work.

DIGITAL 3-STATE (Adjustable) THROTTLE
(Extended-feature Systems Only)

An adjustable 3-state throttle feature is available on the extended feature 4.5 L/6.8 L DE10 JDEC System on systems that do not specify cruise control. The adjustable 3-state throttle consists of a three-position rocker switch that can be used to select slow idle, fast idle, or an adjustable intermediate speed. Slow idle is also adjustable up to a preset maximum of 1400 rpm.

If an analog (foot or hand) throttle is desired, you can add up to two throttle potentiometers that would operate between the preset intermediate and low operating speeds. The adjustable 3-state throttle must be set in the "Low Speed" position for the analog throttle to work.

Three switches make up the Adjustable 3-State Throttle:

- Throttle Switch
- Bump Enable Switch
- Bump Switch

The Throttle Switch

The Throttle switch allows you to choose between three operating speeds, fast idle, slow idle, and an intermediate speed. Slow idle is adjustable up to a preset maximum of 1400 rpm. The intermediate speed can be adjusted and locked to any desired speed between 1400 rpm and the factory preset fast idle. These speeds can be adjusted and locked by using the Bump Enable and Bump switches.

The Bump Enable Switch

The Bump Enable switch serves as a lock for the Bump switch to make sure the operating speed is not changed accidentally or as a result of a Bump circuit failure. The Bump Enable switch must be "On" for the Bump switch to work.

The Bump Switch

The Bump switch for the digital 3-state throttle allows you to adjust either the "Intermediate" or slow idle speeds. When the Throttle Switch is on " Intermediate" and the Bump Enable switch is "On," moving the Bump switch to the "-" (minus) position decreases the intermediate speed setting slightly. Moving the Bump switch to the "+" (plus) position increases the pre-selected intermediate speed slightly (but not past fast idle). When the Throttle Switch is on "Low," and the Bump Enable switch is "On," moving the Bump switch adjusts the slow idle speed.

The bump switch works like the "Accel" and "Coast" buttons on a cruise control. A momentary tap on the switch will bump the speed up or down about 10 rpm (or 0.25 rpm at "High" speed on gen sets). However, if you hold the switch down, speed will continue to ramp up or down continuously until the switch is released, then it will remain at whatever rpm it has reached at that point.

To permanently set intermediate and slow idle speeds, press the Bump Enable button three times after adjustment. The preset speeds will be remembered, even if the ignition is turned off or the battery is disconnected.

Cruise Control (Extended-feature Systems Only)

Engine ECU's are available with and without the Cruise Control function. The Cruise Control is an off-road type that maintains a constant engine RPM under varying load conditions. By comparison, an automotive type cruise control maintains a constant road speed.

The Cruise Cancel/Resume function is a one-button, cancel-then-resume function. The first time button contact is made, with Cruise Control active, the Cruise Control disengages and the engine speed drops to idle. If button contact is made again within one minute and with the engine speed above 1300 RPM, the Cruise Control will "Resume." This feature allows the placement of the Cancel/Resume button in a convenient location in the vehicle cab and does not require the use of the normal Cruise controls for momentary interruptions in cruise operation.

The Cancel/Resume function is intended for applications like agricultural tractors and sprayers that turn around at the end of each row in a field. This allows the operator to use the throttle and/or brake to turn the vehicle around. When ready to resume field operations, the operator brings the engine speed above 1300 RPM and activates the Cancel/Resume function again to resume cruise speed. An internal timer gives the operator one minute to complete the turnaround maneuver.

The Cruise Control has the normal functions of:

- Cruise Control power "ON" or "OFF"
- "Set" or "Bump Up" Engine Speed
- "Resume" or "Bump Down" Engine Speed
- Vehicle brake or clutch pedal to disengage Cruise Control

These feature generally function similar to an automotive cruise control. Refer to the cruise control wiring instructions later in this document for more details.

Only one cruise control station can be used with the DE10 system. There is no secondary ("remote") cruise station feature.

For option codes with cruise control, see the 8300 option group descriptions and Engine Performance Curves. For cruise cruise control wiring details, see "Application Feature Wiring" section.

Selectable Governor Regulation (Extended-feature Systems Only)

There is no separate performance program connector on DE10 systems. On full-featured ECUs without cruise control, Pin E in the 23-pin optional feature connector is used to choose between isochronus governing and droop governing. When Pin E is not connected to anything, normal droop governing is selected. When Pin E is connected to battery voltage, isochronus governing is selected.

Normal droop gives a drop in engine speed with an increase in load or an increase in engine speed with a decrease in load. The normal % droop for the engine (usually 5-10%) is listed in the option group descriptions and on the engine performance curve. When isochronus governing is selected, the droop is set to 0%, and there is no change in engine speed as the load changes until the engines torque limit is reached.

On standard ECUs, or ECUs with cruise control, governing is fixed at the factory at either droop or isochronus, and is not changeable by the user. To determine if your particular engine configuration has isochronus or droop governing, refer to the engine performance curve.

Katolight Service - Master Repair Manual - Page 2870

Katolight Service - Master Repair Manual - Page 2871

GOVERNOR SETTINGS FOR GEN-SETS

Isochronus Governing

Most gen-sets are normally operated with the isochronus governor selected. Isochronus governing is intended for use with either stand-alone gen-sets, or gen-sets that are paralleled using a commercial load sharing module.

For stand-alone gen-sets, either prime or standby, the throttle switch can be left in the fast-idle position and/or the analog (adjustable) throttle should be turned all the way up to the maximum speed position. With the throttle in the fast idle position, the governor will try to maintain exactly 1800 rpm (or 1500 rpm for 50-Hz units).

The isochronus governor programmed into gen-set ECUs is non-linear. It does not increase speed evenly as the throttle is turned up. For an 1800-rpm gen-set, it follows the curve shown below. ECUs programmed for 1800 rpm operation are not suitable for 1500 rpm (50 Hz) operation.

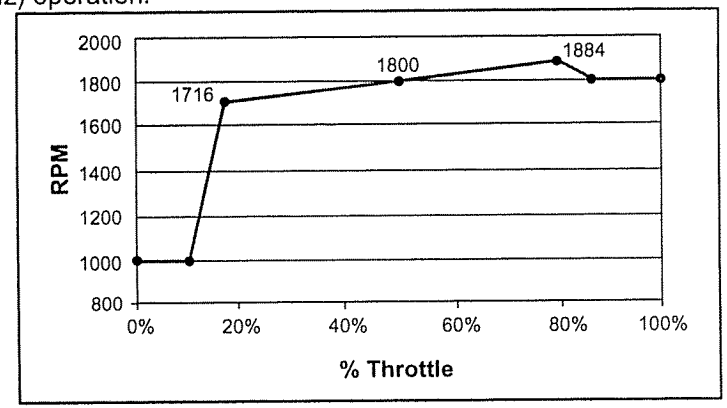

Governing, Isochronous

The 1500-rpm ECU (if available) behaves similarly. Most of the throttle travel is used to adjust speed within plus or minus 84 rpm of rated speed. This allows very fine adjustment of speed in that range if needed, and it meets the requirements of commercially available load sharing modules. If throttle travel exceeds 82%, speed reduces until it reaches rated speed at 87.5% travel. Because of this feature, the gen-set operates at rated speed (1800 or 1500 rpm) when the throttle switch is in the "fast idle" position, or if the analog throttle is turned all the way up, or in the event of a throttle wiring failure, or if no analog or adjustable 2-state throttle is connected.

This isochronus governor can be used directly with commercially available load sharing modules. When two or more engines are being controlled by a load sharing module, the load sharing module output can be connected directly to the analog throttle input to the ECU, as shown in the analog throttle wiring section below.

Standard Droop Governing

Standard Droop governing is intended for use when sharing load between two John Deere electronically controlled engines without the aid of a commercial load sharing module, or for paralleling with the utility grid.

With a gen-set engine in standard droop mode and the throttle control at fast idle, the engine operates with breakaway at exactly 1800 rpm as shown below (or 1500 rpm on 50 Hz units). Fast idle speed is 20-60 rpm above rated speed, depending on governor droop for your particular engine. Governor droop for each engine is listed on the certified Performance Curve.

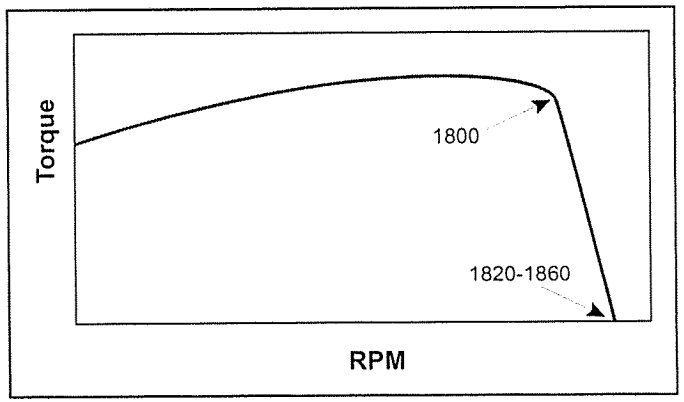

Governing, Standard Droop

Multiple John Deere engines with JDEC controls operated in this mode and wired directly in parallel will automatically share load, although frequency will vary with load. This mode is intended for use with other electronically controlled John Deere engines in the same operating mode. It is not intended to be used to parallel with other models of engines. To share load at exactly 1800 rpm (60 Hz), a commercial load sharing module must be used.

Katolight Service - Master Repair Manual - Page 2872

Controller Area Network (CAN)

The CAN bus is a high speed open interconnect network for electronic systems on on-highway and off-road vehicles and stationary equipment. It allows electronic systems to communicate with each other through a standard architecture of electronic signals over shielded twisted-pair wires. Engines can communicate with throttles, transmissions and brakes. Vehicles can communicate with trailers. Agricultural and construction equipment can communicate with implements and accessories. Stationary equipment can communicate with controllers or other networked equipment. Information on the network can be displayed to the operator on a virtual terminal (instrument panel) or relayed to another location via telemetry. Up to 30 Electronic Control Units or modules can be connected together through a single CAN network segment.

A CAN connection (SAE J1939) is provided in two different locations on the Engine wiring harness. A round Deutsch 9-pin CAN connector is provided primarily for service/diagnostic purposes. A Deutsch 3-pin wedge connector, intended for customer computer interface, has also been provided.

The pins in the Deutsch connectors are:

Deutsch 9-pin Round Connector	**Function**
Pin A, Wire #050C (black)	Ground
Pin B, Wire #012B (red)	Power Supply (+12 or +24 volts)
Pin C, Wire #904D (yellow)	CAN_H
Pin D, Wire #905D (dark green)	CAN_L
Pin E, Wire #020E (black)	Shield
Pins F through J	Spare (unused)

Deutsch 3-pin Wedge Connector	**Function**
Pin A, Wire #904A (yellow)	CAN_H
Pin B, Wire #905A (dark green)	CAN_L
Pin C, Wire #020A (black)	Shield

The CAN bus is also accessable through the 21-pin instrumentation and controls connector which is described in the "Instrumentation and Controls Wiring" section of this document.

Standard CAN bus messages are listed in the Component Technical Manual. Special CAN messages are required for use with electronically controlled Allison transmissions.

For details to use this system, refer to SAE J1939/11 published by:

The Society of Automotive Engineers
400 Commonwealth Drive
Warrendale PA 15097-0001.

BASIC INSTALLATION

Welding Precautions

Welding causes high currents or electrostatic discharge in electronic components that can cause permanent damage to the ECU. We recommend that "No Welding" signs be prominently displayed on the vehicle chassis.

The following steps should be used to protect from damage when welding on the vehicle chassis:

1. Disconnect the connectors from the ECU.
2. Connect the welder ground close to the welding point and be sure ECU or other electronic components are not in the ground path.

For applications that require routine or daily welding (i. e. for bucket tooth resurfacing, etc.), contact OEM Application Engineering.

Power and Ground Connections

After all other wiring is completed, and immediately before operating the system for the first time, the main power and ground connections to the battery should be made. Unterminated system power and ground wires are provided in the engine wiring harness for this purpose. These wires should be connected directly to the battery if possible. The battery can be located up to 10 feet (3 M) from the engine. Connect as follows:

- Battery Power (Wire #002C, red, 10 gauge)
  Should be connected directly to the positive terminal of the battery.
- Ground (Wire #050F, black, 10 gauge)
  Should be connected directly to the negative terminal of the battery.

If a battery disconnect switch is used on the negative battery terminal, wire #050E must be connected to the disconnectable side of the switch instead of the battery terminal.

When ordering the engine, 12-volt or 24-volt operation must be specified. The engine ECU has the following voltage requirements:

12-volt	24-volt	Function
0 to 6 volts	0 to 10.6 volts	System does not operate - No damage
6 to 9 volts	10.6 to 18 volts	Cranking Voltage Range - Some features "inactive"
9 to 16 volts	18 to 32 volts	Normal Operation - All features "active"
16 to 26.5 volts	32 to 36 volts	Over-voltage - System can operate for up to 5 minutes without damage - Some features "inactive"
>26.5 volts	>36 volts	System damage

TRANSIENT VOLTAGE PROTECTION

There are two different Transient Voltage Protection (TVP) modules; 12-volt and 24-volt. The 12-volt TVP module protects the engine ECU from transient voltage spikes (such as alternator load dump) greater than 24 volts. The 24-volt TVP module protects against voltage spikes greater than 36 volts. The TVP module can be wrapped in the wiring harness or mounted in the vehicle. If the TVP module is mounted in the vehicle, it should be mounted vertically with the pigtail wires exiting from the bottom of the module. The mounting location should be away from battery fumes, engine heat and vibration, such as in a control cabinet, vehicle chassis, or cab. Mounting ears of the TVP module may not withstand overtightening of mounting bolts. The TVP module does not protect against sustained over-voltage to the ECU.

The TVP Module mates with the TVP Connector in the engine wiring harness. The TVP module is not always required. Some alternators have internal TVP protection. A TVP module will be provided if needed, depending on the alternator option specified. If you provide your own alternator, a TVP module must be used.

REVERSE CURRENT PROTECTION

The system has limited protection against the battery or battery boosters being connected in reverse. The fuel injection pump should never be operated except when plugged in to the standard engine wiring harness with pump power relay and fuse, or equivalent.

Starter Relay

The standard engine wiring harness is designed for use with a starter relay located within 2 feet (600 mm) of the starter. Under no circumstances should the starter solenoid be operated directly from the key switch without a relay.

INSTRUMENTATION AND CONTROLS WIRING

To complete a runable engine, instrumentation and operator controls must be added. There are three ways to add basic instrumentation and operator controls to the system:

1. Use one of the John Deere pre-packaged instrument panels.
2. Use the RE508625 instrumentation and wiring kit to build your own instrument panel.
3. Design your own instrumentation and controls (without the RE508625 kit).

Using a Prepackaged John Deere Instrument Panel

Two complete prepackaged instrument panels are available from John Deere. The full-featured RE162429 instrument panel is a large panel designed to accommodate the needs of applications that require extensive and varied instrumentation and controls. The Basic RE516508 panel is a smaller panel, designed to meet the needs of applications that require minimal instrumentation and controls.

A RE516537 adapter harness is used to attach either panel to the 21-pin instrumentation and controls connector on the engine. No other connection is required.

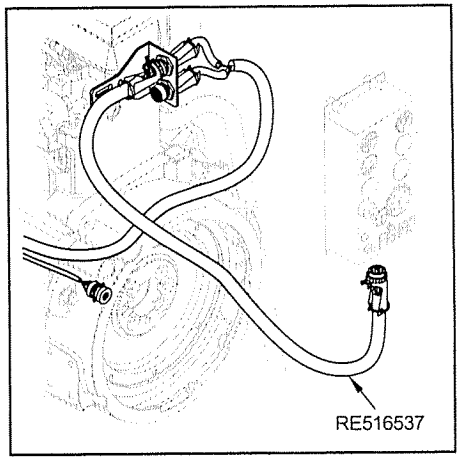

Adapter Harness (21-pin) - RE516537

Katolight Service - Master Repair Manual - Page 2873

Katolight Service - Master Repair Manual - Page 2874

Full-featured Instrument Panel - RE162429

The full-featured RE162429 instrument panel is a large panel designed to accommodate the needs of applications that require extensive and varied instrumentation and controls. It operates on 12 or 24 volts.

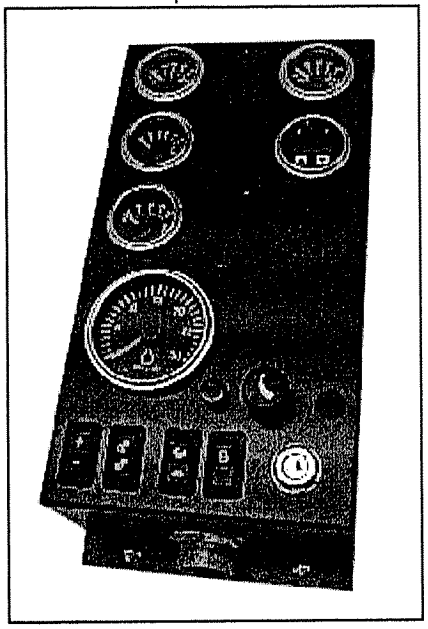

Instrument Panel, RE162429

The following features are standard on the RE162429 instrument panel:

STANDARD RE162429 INSTRUMENT PANEL FEATURES

- Ignition switch
- Panel mounted fuse
- Adjustable 2-state throttle switches*
- Shutdown override switch
- RE68155 Diagnostic Gauge
- Tachometer
- Oil pressure analog gauge
- Coolant temperature analog gauge.

* Bump switch and bump-enable switch are not functional with the Standard ECU.

The following optional features are available for the RE162429 panel. To use the optional features, order the parts and plug them in. Connectors and panel cutouts are provided in the panel:

OPTIONAL RE162429 INSTRUMENT PANEL FEATURES

- RE192470 Ramp throttle switch
- RE69667 Analog throttle potentiometer
- RE163436 Percent load gauge
- RE162422 12-volt voltage gauge
- RE163277 24-volt voltage gauge
- RE162427 Audible warning alarm
- RE162449 Backlight dimmer control
- RE162448 Converter for 24-volt backlighting
- RE67334 Glow-plug wait-lamp assembly
- RE516537 Instrument panel adapter harness
- RE516542 12-foot extension harness (plugs into adapter harness)

* The analog throttle feature is not functional with the Standard ECU.

Using the RE162429 Instrument Panel with Extended-feature ECUs

When using the RE162429 instrument panel, 4.5 L and 6.8 L engines with DE10 fuel systems and Extended-feature ECUs operate identically to the 8.1 L, 12.5 L, or VP44-equipped 6.8 L engines.

Using the RE162429 Instrument Panel with Standard ECUs

DE10 engines with Standard ECUs can also use the RE162429 panel, but not all panel features will be active. When using a standard ECU with 2-state throttle, the throttle switch will work. (It will switch between fast idle and slow idle.) However, the bump and bump-enable switches will not function. The 2-state throttle is not adjustable. Optional ramp throttle software is available for the standard ECU, which can be used in conjunction with the optional ramp throttle switch if adjustable speed operation is required. The standard ECU also does not support the optional analog throttle feature. All other standard and optional RE162429 panel features will work with standard ECUs.

Basic Instrument Panel - RE516508

The Basic RE516508 panel is a smaller panel, designed to meet the needs of applications that require minimal instrumentation and controls, particularly DE10 applications with standard ECUs. The RE162429 panel operates on 12 or 24 volts.

The RE516508 panel comes with a ramp throttle switch and diagnostic gauge. There is no wiring or mounting space for an analog throttle or adjustable 3-state throttle. All engine operating parameters, such as RPM, oil pressure, coolant temperature, etc., can be read through the diagnostic gauge. There is no wiring or mounting space for individual analog gauges.

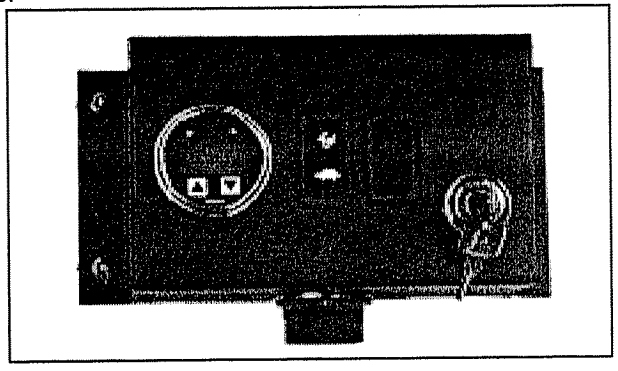

Basic Instrument Panel, RE516508

The following features are standard on the RE516508 instrument panel:

STANDARD RE516508 INSTRUMENT PANEL FEATURES

- Ignition switch
- RE192470 Ramp Throttle Switch
- RE68155 Diagnostic gauge

The following optional features are available. All optional RE516508 panel features will work with either standard or extended-feature ECUs. To use the optional features, just order the parts and plug them in. Connectors and panel cutouts are provided in the standard panel:

OPTIONAL RE516508 INSTRUMENT PANEL FEATURES

- RE163465 Shutdown override switch
- RE198505 3-State throttle switch (non-adjustable)
- RE67334 Glow-plug wait-lamp assembly
- RE516537 Instrument panel adapter harness
- RE516542 12 foot extension harness (plugs into adapter harness)

Control Panel Harness Extensions

A 12-foot wiring harness (RE516542) extension is available for the 21-pin control panel connector. Depending on the engine harness, the use of the 3 foot adapter harness (RE516537) with two female ends may be required to connect the control panel to the end of the harness extension. It is recommended that no more than two 12 foot extensions and one adapter harness are linked together in any one application.

Using the RE508625 Instrumentation and Wiring Kit

The second easiest way to provide all the control system parts that do not come on the engine is to use the John Deere RE508625 instrumentation and wiring kit.

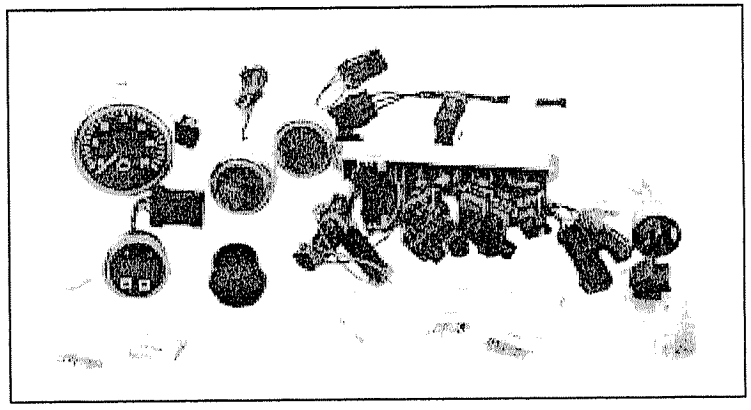

Instrumentation and Wiring Kit, RE508625

The RE508625 instrumentation and wiring kit includes all the parts that are included in the RE162429 instrument panel except for the adjustable 2-state throttle switches. The RE508625 kit includes ignition switch, shutdown override switch, all needed wiring connectors, and the RE162450 Databus Module which can be used to add up to three additional auxiliary gauge displays (in addition to the included tachometer, coolant temperature, and oil pressure gauges). All you need to add are the actual wires and a throttle control.

All optional features of the RE162429 panel also apply to the RE508625 instrumentation kit.

Katolight Service - Master Repair Manual - Page 2875

Making Your Own Instrumentation and Controls

If you choose not to use one of the John Deere instrument panels or instrumentation kit, you will have to provide your own ignition switch, fuse holder, throttle device, wiring harness, diagnostics, and any other instrumentation and controls you need.

All required electrical connections to the engine, including throttle, instrumentation, key switch, starter, and alternator connections, are made through a single 21-pin Deutsch connector provided on the engine wiring harness. A second optional feature connector and a remote on/off connector is provided with full-featured ECU's. An unterminated wire is provided to drive a relay that operates the intake heater starting aid.

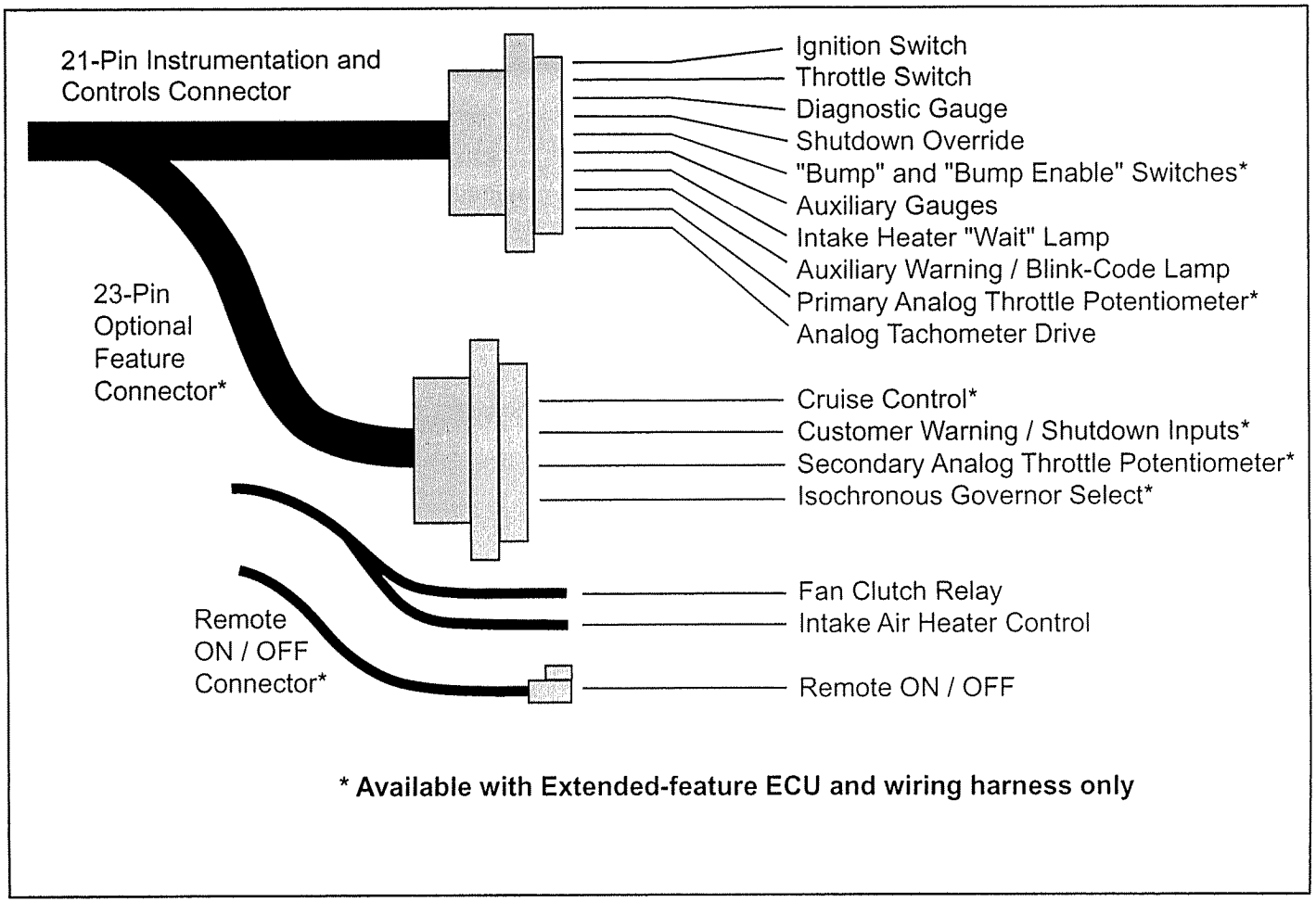

Instrumentation Connections

Katolight Service - Master Repair Manual - Page 2876

MINIMUM REQUIRED WIRING

There are two optional types of minimum system wiring; one for use with CAN-based instrumentation and one for use with non-CAN instrumentation.

Both types of minimum required wiring attachments can be made through the 21-pin instrumentation and controls connector. Some kind of ignition switch is always required. Diagnostics are also required. For 8.1 L and 12.5 L engines, you must install the RE68155 Diagnostic Gauge or equivalent CAN-based instrumentation. The CAN-based RE68155 Diagnostic Gauge is not strictly required on 4.5 L and 4.5 L / 6.8 L engines because they can also be specified with blink-code diagnostics. However, it is still highly recommended because it is the easiest way to meet all diagnostic and instrumentation requirements, and to keep wiring common with the larger engines.

If you do not use the RE68155 Diagnostic Gauge or other CAN-based instrumentation on 4.5 L and 6.8 L engines, you must provide a warning lamp, shutdown override switch (which also acts as a blink-enable switch), hourmeter, and any other desired instrumentation such as tachometer, oil pressure gauge, and coolant temperature gauge separately.

For gen-set applications that start and operate at full rated speed only (1500 or 1800 rpm), it is not necessary to connect anything except the key switch and diagnostics.

For industrial applications with full-featured ECUs, the analog throttle circuit must also be completed. If you choose to operate without an analog (potentiometer) throttle, you still must install a resister bridge to terminate the circuit. The high/low speed select switch must also be connected on all industrial (non-gen-set) ECUs. If you choose not to use the high/low select feature, this circuit can be easily terminated with a single resister.

Katolight Service - Master Repair Manual - Page 2877

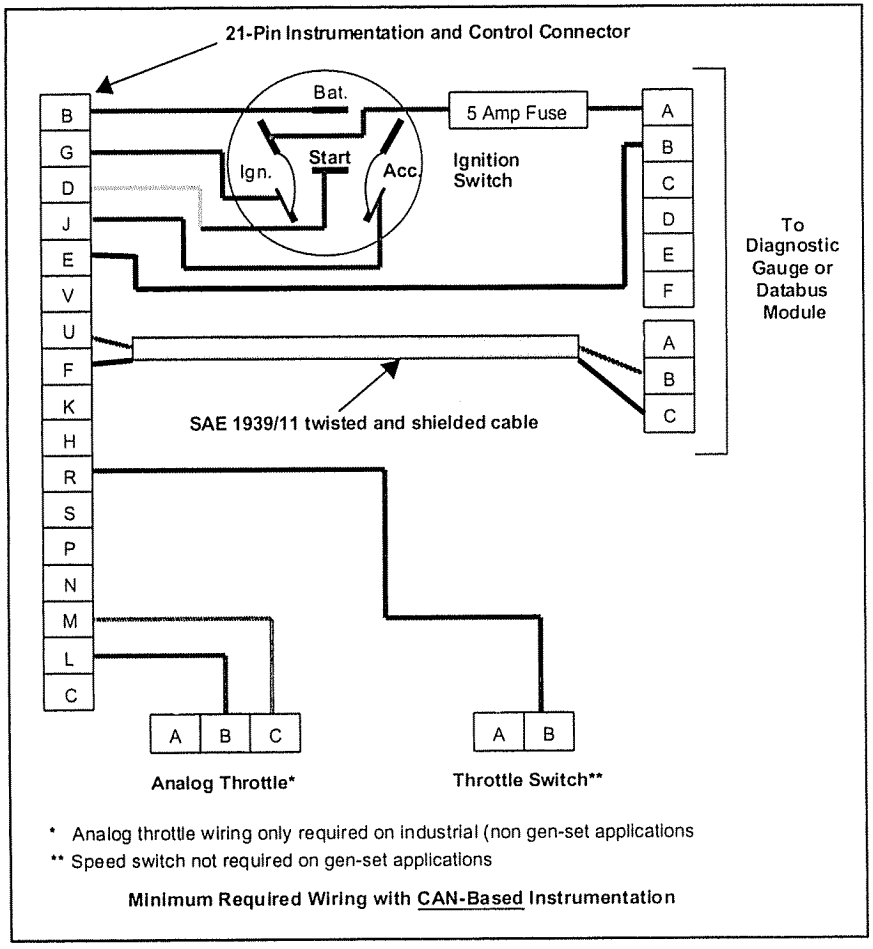

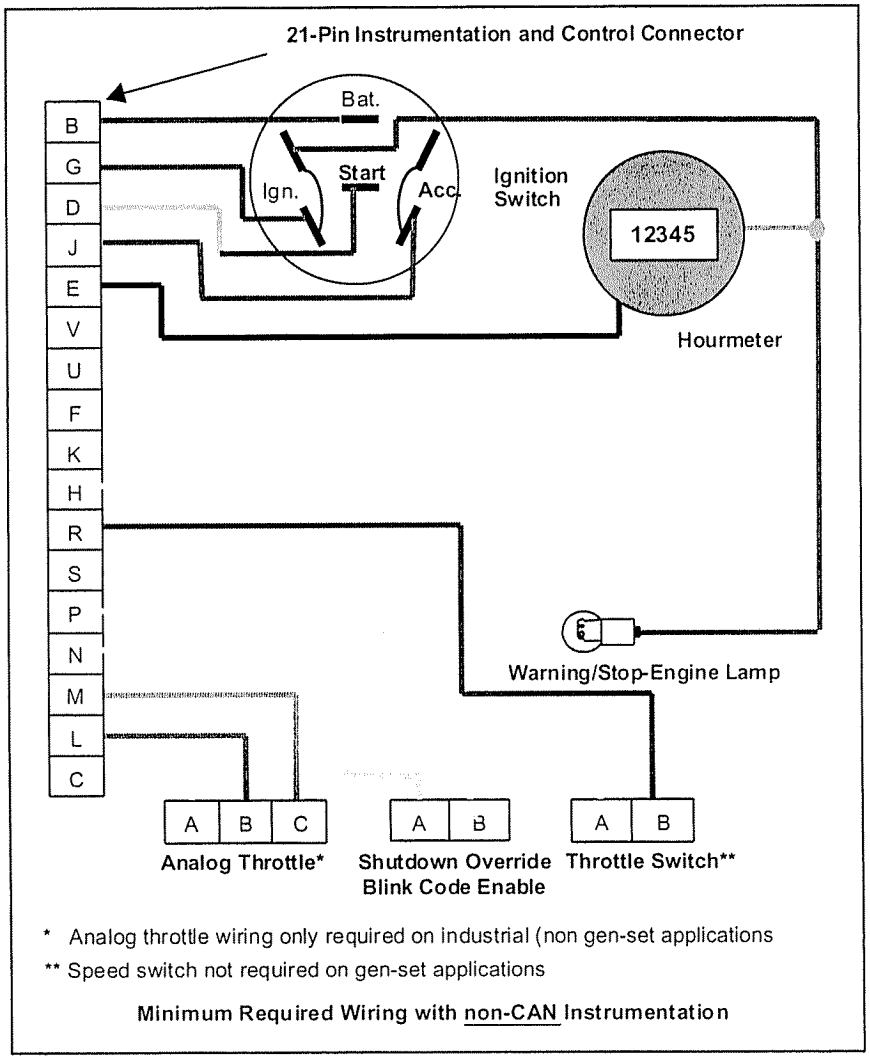

Minimum Required Wiring

Katolight Service - Master Repair Manual - Page 2878

Katolight Service - Master Repair Manual - Page 2879

BASIC INSTRUMENTATION AND CONTROLS HARNESS

For all required connections, and for the more common optional connections that are made through the 21-pin connector, refer to the following wiring diagram. This diagram provides a complete wiring harness to interface the 21-pin connector with your instrument panel. The connectors shown fit the recommended John Deere gauges, switches, etc., listed. If you choose to use other components, different connectors may be required.

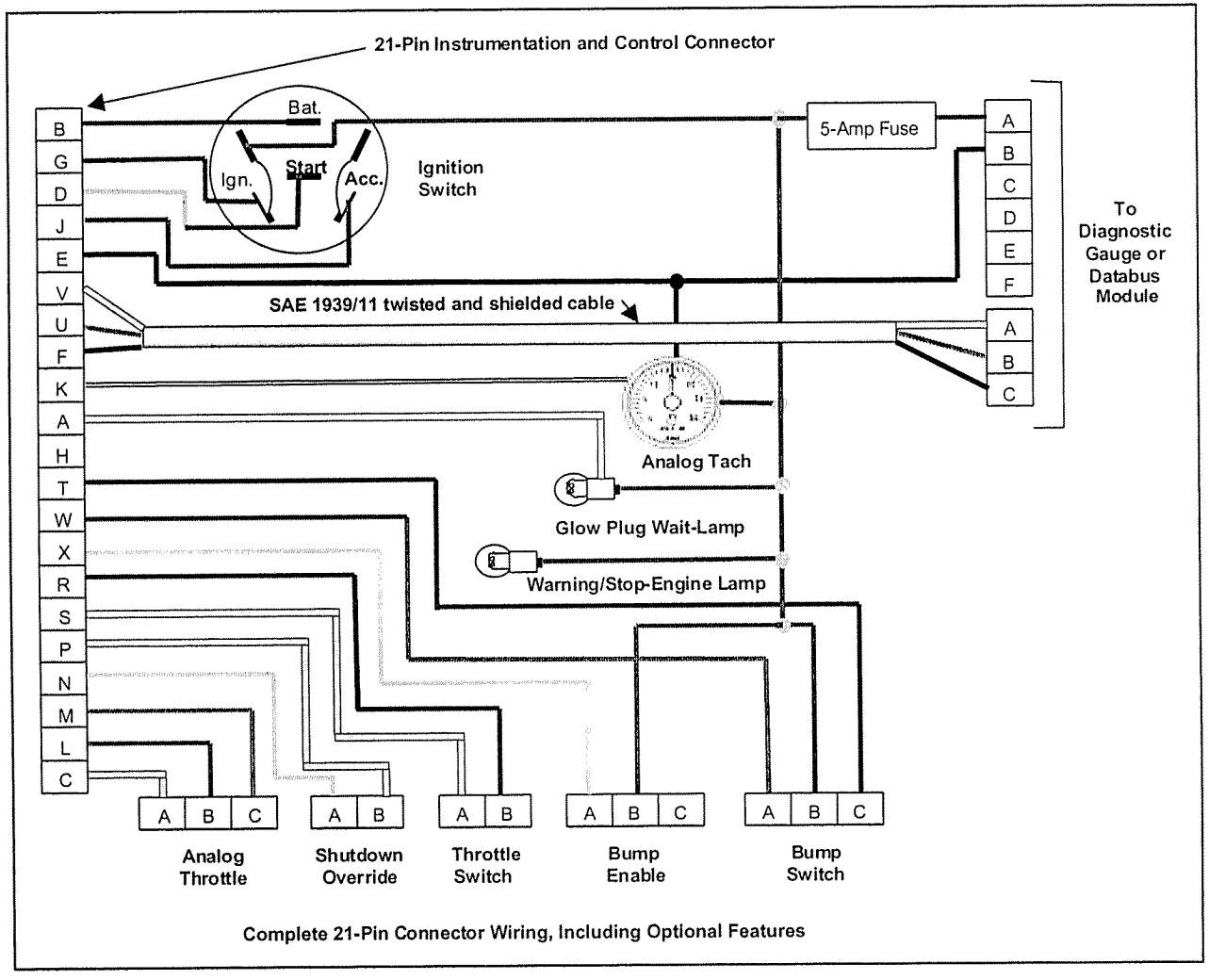

Complete 21-Pin Connector Wiring, Including Optional Features

Instrumentation and Controls Connections

For details on wiring all required and optional circuits, refer to the following sections.

21-Pin Deutsch Instrument Panel Connector

The 21-pin Deutsch connector makes the main connection between the engine and your instrumentation and controls. The RE508625 instrumentation and wiring kit includes this connector. If you provide your own harness, you will have to provide this connector with pin assignments per the following chart. Wire colors should be as shown in the chart and illustration. These colors are used in all John Deere instrument panels and kits, and all John Deere service publications identify the wires by the colors and circuit numbers shown.

Pin	Circuit No.		Color	Wire Gauge	Description	Function
	Std.	Ext.				
A	474	474	yellow	18	Intake heater wait lamp	To ground side of intake air heater wait lamp
B	022	032	red	12	Fused unswitched battery power	To "B" terminal of your ignition switch
C	Plug	914	yellow	18	Sensor return	To the primary analog throttle potentiometer or emulator
D	422	422	red	12	Starter relay	To "Start" terminal on your ignition switch
E	050	050	black	18	Ground	Grounded on the engine side to the battery and ECU. Use for any non-sensor ground (lights, gauge power, etc)
F	020	020	black	18	CAN shield	To any CAN connectors including the diagnostic gauge
G	012	012	red	12	Battery power to ECU (switched)	Must be wired to the "Ignition" terminal of key switch.
H	473	473	orange	18	Warning lamp driver	To ground side of the warning lamp
J	412	412	red	18	Alternator ignition	Should be wired to the "Acc'y." or "Ignition" terminal of the ignition switch.
K	439	439	white	16	Tachometer output	A synthesized frequency signal that can be used to drive a non-CAN electronic tachometer
L	Plug	915	green	18	Primary analog throttle input voltage	To center (sensing) terminal of the primary analog throttle potentiometer (or throttle emulator)
M	Plug	911	brown	18	+5 Volts (sensor power)	To the throttle potentiometer
N	918	918	gray	18	Shutdown override	To shutdown override switch
P	911	911	brown	18	Shutdown override return	To shutdown override switch
R	947	947	violet	18	Throttle switch	Throttle switch (2-state or Ramp)
S	914	914	yellow	18	Sensor return	Sensor return
T	Plug	936	blue	18	Resume / Coast / Bump Speed Down	To the 2-state throttle speed select switch and/or the cruise resume/coast switch
U	905	905	green	18	CAN low	To any SAE J1939 CAN-based devices including the diagnostic gauge
V	904	904	yellow	18	CAN high	To any SAE J1939 CAN-based devices including the diagnostic gauge
W	Plug	955	green	18	Set/Accelerate/Bump Speed Up	For adjustable 3-state throttle option.
X	Plug	923	orange	18	Bump enable and brake enable	For adjustable 3-state throttle option.

Katolight Service - Master Repair Manual - Page 2880

Wire colors should be as shown in the chart and illustration. These colors are used in all John Deere instrument panels and kits, and all John Deere service publications identify the wires by the colors and circuit numbers shown. Specifications for the mating connector are as follows:

Deutsch Part Number	John Deere Part Number	Cavities	Description	Material	Plug	Seal
HDP26-24-21SE	57M8112	21	HD30 Receptacle (Plastic) Multi Size Terminals	Black Plastic	Yes	No

Deutsch Part Number	John Deere Part Number	Gauge	Description	Material	Plating	Seal
1062-16-0622	57M8165	20	Stamped And Formed Socket	Copper Alloy	Nickel	No
1062-16-0122	57M7546	18 - 16	Stamped And Formed Socket	Copper	Nickel	No
1062-12-0166		14 - 12	Stamped And Formed Socket	Copper Alloy	Nickel	No
114017	R78069		Deutsch Cavity Plug	Plastic		

Ignition Switch

The ignition switch must be connected on all applications. All ignition switch connections can be made through the 21-pin connector. Pin J on the 21-pin connector is the alternator ignition circuit. If your ignition switch does not have an "Accessory" terminal, the wire from Pin J can be connected to the "Ignition" terminal, along with the ECU power and all other switched accessories.

If necessary to support heavy accessory loads through the key switch (flood lights, electric motors, etc.), battery power to the "BAT" terminal of the key switch can be taken from a separate heavy-duty source instead of Pin B in the 21-pin connector. Pin B is provided for your convenience to simplify wiring on simple power unit installations. However, the fuse and wire gauges are sized for engine fuel system power requirements only. It should not be used if additional loads of more than a few amps are carried through the key switch. The starter relay and alternator ignition connections can also be made through separate circuits instead of Pins J and D. Only switched power to the ECU must be connected through the 21-pin connector.

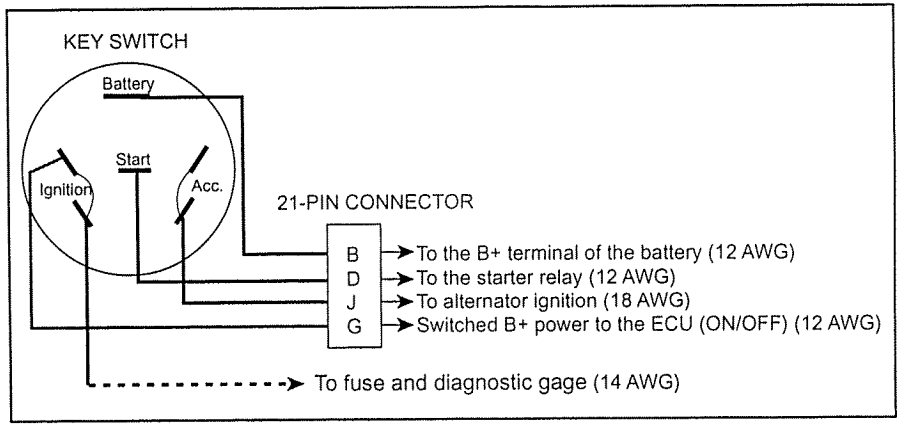

Ignition Switch Connections

Katolight Service - Master Repair Manual - Page 2881

Analog Throttle Potentiometer

This circuit does not function on standard DE10 systems, so it does not have to be connected. No throttle emulator is required for the primary or secondary analog throttle for extended-feature DE10 systems.

The connector shown below fits the RE69667 analog throttle or the RE503681 throttle emulator. The harness connection is a Packard Weather Pack 3-cavity, female connector, #12020829, with male terminals, #12124582, and cable seals installed. Note that these are the opposite terminals usually used with this connector.

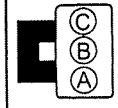

Pin	Circuit	Color	Size	Destination
C	911	Brown	18 AWG	to Pin M on 21-Pin Connector
B	915	Orange	18 AWG	to Pin L on 21-Pin Connector
A	414	Yellow	18 AWG	to Pin C on 21-Pin Connector

Analog Throttle Potentiometer

If an analog potentiometer is not used, a resistor bridge that sets the throttle in the low idle range must be installed. Either the RE503681 throttle emulator with the connector shown above can be used, or you can wire your own equivalent resistor bridge into the appropriate pins on the 21-pin connector as shown below. The exact size of the resisters is not important, as long as total resistance is 2,000-15,000-Ohms, and the small resistor is 6% to 20% of the large resistor size.

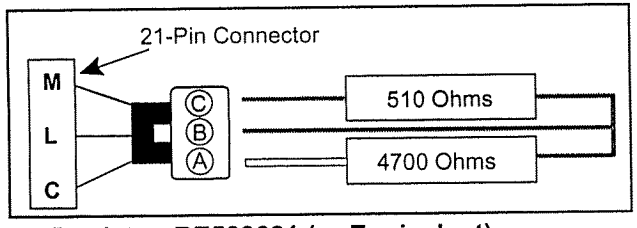

Throttle Emulator, RE503681 (or Equivalent)

The RE69667 analog throttle is a multi-turn 5,000-Ohm potentiometer throttle designed for stationary applications. Many other throttle styles, including various foot pedal throttles, are available from Morse, Williams Controls, and other suppliers. Any potentiometer-style analog throttle will work, as long as total resistance is in the 2,000- to 15,000-Ohm range.

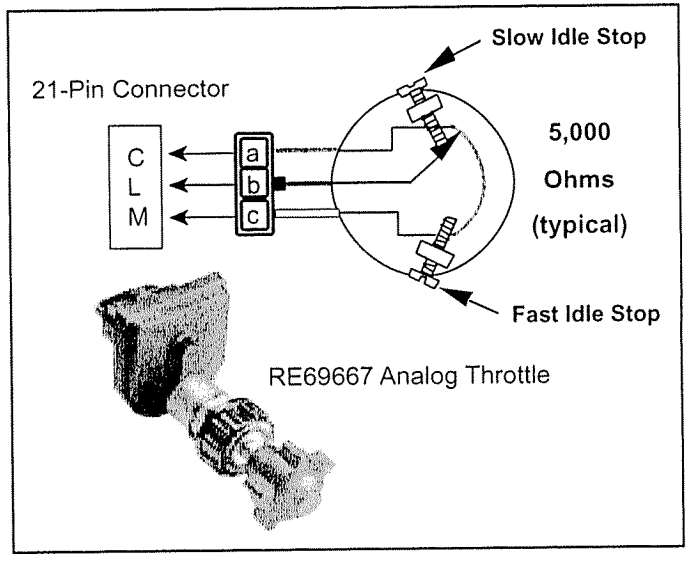

Analog Throttle, RE69667

Katolight Service - Master Repair Manual - Page 2882

THROTTLE POTENTIOMETER PRE-ADJUSTMENT PROCEDURE

The analog throttle circuit is designed to operate with a potentiometer. Pin C (Circuit 911) is a 5-volt reference signal from the ECU. Pin A (Circuit 414) is sensor return (an isolated ground just for the throttle). The voltage on Pin B (Circuit 915) is the actual throttle signal. The ECU responds to the voltage on Circuit 915 as shown below:

Signal on Circuit 915				ECU Response
Industrial		Gen Set		
Voltage Ratio (referenced to circuit 911)	Approximate Volts (assuming 5-volt ref.)	Voltage Ratio (referenced to circuit 911)	Approximate Volts (assuming 5-volt ref.)	
< .05	< .25 V	< .05	< .25 V	"Throttle Signal Low" fault code generated and warning lamp lit; Engine defaults to any other throttle inputs present, or to low idle.
.05 - .20	.25 - 1.0 V	.05 - .10	.25 - .50 V	Normal low idle range (also Auto-Cal range, see below); No fault generated.
.20 - .80	1.0 - 4.0 V	.10 - .90	.50 - 4.5 V	Normal variable speed range; Speed demand proportional to voltage.
.80 - .95	4.0 - 4.75 V	.90 - .95	4.5 - 4.75 V	Normal fast idle range (also Auto-Cal range, see below); No fault generated.
> .95	> 4.75 V	> .95	> 4.75 V	"Throttle Signal High" fault code generated and warning lamp lit; Engine defaults to any other throttle inputs present, or to low idle.

To prevent error codes and unexpected changes in speed, the fast and slow idle stops on the throttle potentiometer must be adjusted so that the voltage on Pin L cannot go below 0.25 volts or above 4.75 volts.

Auto-Cal Feature (Analog Throttle #1 Only):

Industrial (non-gen-set) applications also have an Auto-Cal feature that automatically adjusts the analog throttle range to match your sensor. Once the stops are adjusted to limit low and fast idle voltage, the "Auto-Cal" feature of the ECU will check the exact range of your throttle potentiometer and adjust the ECU to that range. However, your initial installation must be within certain resistance limits for the Auto-Cal feature to work.

Before plugging it into the wiring harness, adjust the throttle potentiometer using the following procedure:

1. With the potentiometer against the slow idle stop, adjust the stop so that the resistance measured between the ground and wiper connections of the potentiometer (21-pin connector Pins C and L) is between 6% and 20% of overall potentiometer resistance.

2. With the potentiometer against the fast idle stop, adjust the stop so that the resistance measured between the power and wiper connections of the potentiometer (21-pin connector Pins M and L) is also between 6% and 20% of overall potentiometer resistance.

This does not have to be a precise adjustment. The Auto-Cal feature makes a precise adjustment automatically. Once it has been done a few times, you will probably find that adjusting each throttle stop screw a predetermined number of turns is accurate enough. Throttles from John Deere, such as RE68667, are pre-adjusted at the factory.

Katolight Service - Master Repair Manual - Page 2883

POTENTIOMETER WITHOUT MECHANICAL ADJUSTMENT STOPS

If a potentiometer without fast and slow idle stops is used, additional fixed resistors can be wired in series with 21-pin connector Pins C and M as shown below to prevent the analog throttle voltage from going outside the upper and lower limits and generating a fault code.

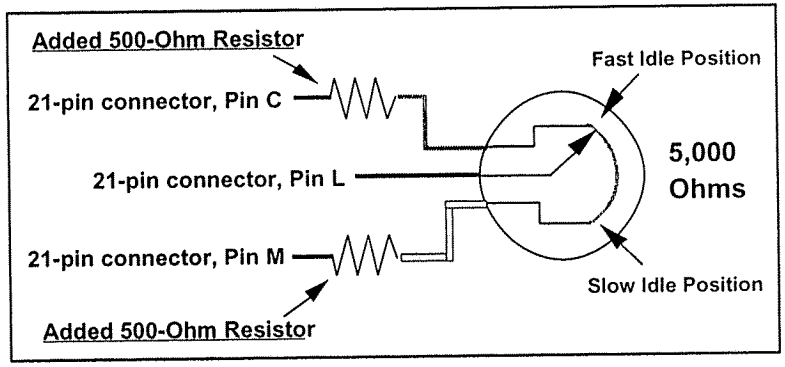

Potentiometer Without Mechanical Adjustment Stops

For the Auto-Cal system to work properly, each added resistor should be between 9-39% of the nominal throttle potentiometer resistance. Total resistance of the potentiometer and both resistors should be in the range of 2000 to 15,000 Ohms.

For gen-set applications, connection of this circuit is not required. Gen-set ECUs default to rated speed (1800 or 1500 rpm), and do not generate a fault code if the throttle is not connected. If the analog throttle is not connected, the engine runs at rated speed (1800 or 1500) only, with no adjustment.

Digital Throttles

Three types of digital throttles are available: a new digital "Ramp" throttle (available on all ECUs), a non-adjustable, 2-state throttle (available on all ECUs), and an adjustable 3-state throttle (available on extended-feature ECUs only). They replace the 2-state adjustable throttle used on the 8.1 L and 12.5 L engines.

If this circuit is not connected on industrial applications, a fault code will be generated. The warning lamp will light and the system will revert to the secondary analog throttle and/or 2-state throttle inputs. If no throttle input is present on industrial applications, the system will revert to low idle. No connection is required on gen-set applications that are intended to run at rated speed only, with no adjustability.

Ramp Throttle:

The Ramp throttle allows you to start at low idle, then adjust operating speed as desired using a single rocker switch.

2-State Throttle (non-adjustable):

The 2-state throttle switches between the factory pre-set slow idle setting and the factory pre-set fast idle setting. Neither setting is digitally adjustable with this feature.

Adjustable 3-state Throttle:

With the adjustable 3-state throttle, the slow idle setting is adjustable up to 1400 rpm and an intermediate speed is adjustable between 1400 rpm and the factory pre-set fast idle speed, using bump switches. The adjustable 3-state throttle works exactly like the old adjustable 2-state throttle, except for an additional switch position that puts the engine at the factory pre-set fast idle setting. If the adjustable 3-state throttle is used with an old instrument panel set up for the adjustable 2-state throttle, it will function as an adjustable 2-state throttle.

Any of the three digital throttles can be used with the analog throttle feature for variable speed operation on extended-feature ECUs.

The new throttle switches plug into the same circuit (identified as "Throttle Switch" on the wiring diagram) as the old adjustable 2-state throttle switch, using the same connector. The new throttle switches are very similar to the old adjustable 2-state throttle switch. They are slightly larger to allow room for an extra resistor. They differ mainly in which switch positions are detented (snap into place), and which are momentary (spring returned). It's mainly the software that makes them perform differently.

The mating connector for all John Deere throttle switches is a Packard Metri-Pack 150 Series two-cavity female connector, #12052641, with #12048074 sealed female terminals, cable seals and a #12052634 TPA or secondary lock. If you provide your own instrument panel and use a fixed resistor instead of a switch, you may choose to hard wire the resistor directly into the main 21-pin instrumentation and controls connector.

The Throttle switch circuit must be connected on all industrial (non-gen-set) applications, even if you do not intend to use the feature. The switch must be in the low speed position for the analog (potentiometer) throttle to work. You must either provide a throttle switch or you must terminate the circuit through a resistor as shown below. On gen-set applications only, if you wish to start and operate at 1800 (or 1500) rpm only with no adjustability, this circuit can be left unconnected.

Katolight Service - Master Repair Manual - Page 2884

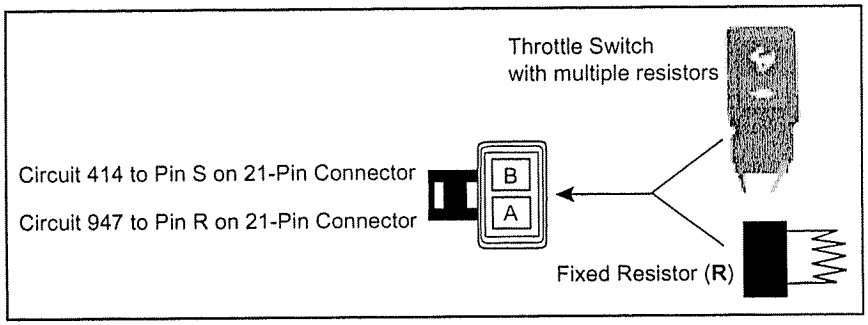

Throttle Switch

The value of the fixed resistor (**R**) depends on what you want to accomplish:

R= 200-400 Ohms — Engine starts and operates at slow idle (fixed for 2-state or ramp throttle or adjustable for adjustable 3-state throttle). The analog throttle inputs are active in this mode. The fixed 200-400-Ohm resistor must be used in conjunction with an analog throttle to allow operation at speeds other than low idle.

R= 900-1400 Ohms — Engine starts and operates at the intermediate speed setting (adjustable 3-state throttle only). This speed can be adjusted using the bump switches, but not with the analog throttle. If this resistance range is used with the 2-state throttle (non-adjustable), the engine will start and run at the factory preset rated speed only.

R= 2500-5000 Ohms — Engine starts and operates locked at the factory pre-set fast idle setting only.

If this circuit is not connected on industrial applications, a fault code will be generated, the warning lamp will light, and the system will revert to the analog throttle inputs. If no throttle signal is present on industrial applications, the system will revert to low idle. No connection is required on gen-set applications that are intended to run at rated speed only with no adjustability.

There are three types of throttle switches that can be used. Each type is intended for use with a corresponding unique 8300 software code.

Ramp Throttle Switch

The ramp throttle software (specified by 8300 option code) is designed to work with the new RE192470 rocker switch, as shown in the illustration below. The RE192470 switch is detented (snaps into position) in the center 'neutral' position only. It is momentary (spring loaded back to neutral) in the bump-up and bump-down positions. Any switch that is designed per the illustration with spring return to the neutral position can be used.

When using the ramp throttle feature, the engine will always start at the factory pre-set low idle. When the switch goes momentarily to the 3000-Ohm position, speed will bump up approximately 25 rpm. If the switch is held in place, the engine speed command will continue to increase. The ramp throttle works in a similar manner to a throttle lever. The speed command will continue to increase as long as the switch is held down, regardless of the engine speed actually achieved. Holding the switch down steadily for several seconds has the same effect as advancing a manual throttle lever to the fast idle position. The engine speed target will reach high idle even if the engine is too heavily loaded to reach fast idle. The engine will accelerate to fast idle as soon as the load is reduced or removed.

If the operator sets the throttle at the high idle rpm, lugs the machine to below rated rpm, then presses the accelerate switch, the target speed will remain at fast idle. It does not reset to the actual engine speed like the cruise functions do.

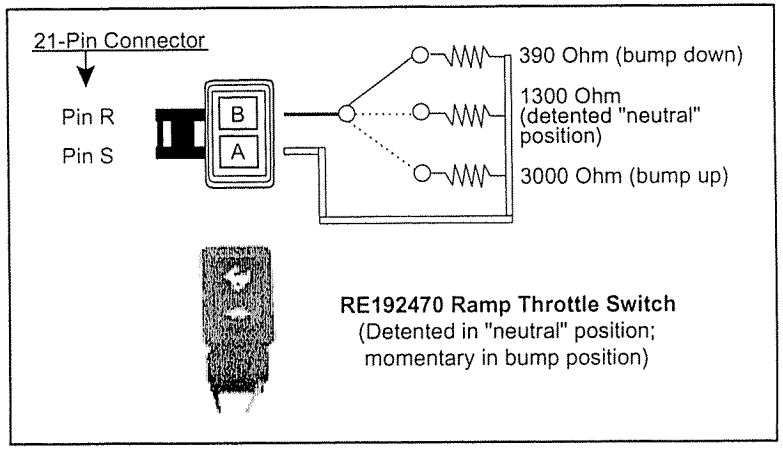

Ramp Throttle Switch

Katolight Service - Master Repair Manual - Page 2885

The mating connector to this switch is a Packard Metri-Pack 150 Series two-cavity female connector, #12052641, with #12048074 sealed female terminals, cable seals and a #12052634 TPA or secondary lock.

The resistors do not have to be exactly as shown. Any resistors in the following range would work:

Bump Down	200-400 Ohms
Neutral	900-1400 Ohms
Bump Up	2500-5000 Ohms

2-State (non-adjustable) Throttle Switch

The 2-state throttle system is non-adjustable. When set in the fast idle position, the engine will start and operate at the factory pre-set fast idle (rated) speed. With the switch set at the slow idle position, the engine will start and operate at the factory preset slow idle speed, unless an analog throttle signal greater than slow idle is present. The analog throttle is active in the slow idle position, but not the fast idle position.

The **non-adjustable** 2-state throttle can either use the old RE162425 adjustable 2-state throttle switch, or the new RE198505 adjustable 3-state throttle switch, or you can make your own switch using the diagram below. The mating connector for all John Deere throttle switches is a Packard Metri-Pack 150 Series two-cavity female connector, #12052641, with #12048074 sealed female terminals, cable seals and a #12052634 TPA or secondary lock.

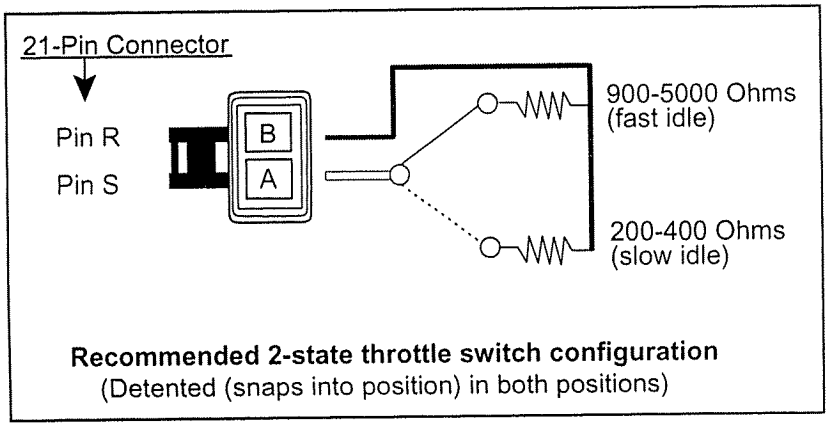

Recommended 2-state throttle switch configuration
(Detented (snaps into position) in both positions)

2-state Throttle Switch Configuration

Two different John Deere switches can be used to operate the 2-state (non-adjustable) throttle. One is the original switch designed for use with the two-state throttle, part number RE162425. The other is the switch designed for use with the adjustable 3-state throttle, part number RE198505.

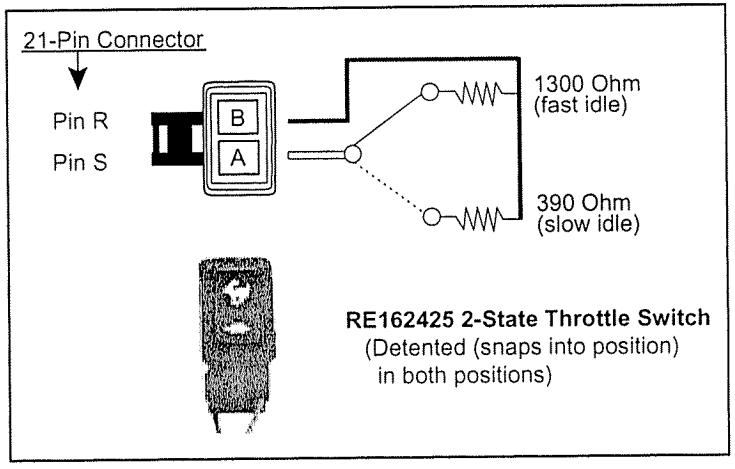

RE162425 2-State Throttle Switch
(Detented (snaps into position)
in both positions)

2-state Throttle Switch, RE162425

If the RE162425 2-state throttle switch is used with software configured for the 2-state (non-adjustable) throttle, it will switch between the factory pre-set slow idle speed and the factory pre-set fast idle speed. If the RE162425 2-state throttle switch is used with software configured for the adjustable 3-state throttle, it will function just like the old adjustable 2-state throttle. Which is to say it will switch between low idle and the adjustable intermediate speed.

The RE198505 adjustable 3-state throttle switch described below can also be used with the 2-state throttle. When the RE198505 adjustable 3-state throttle switch is used with software configured for the 2-state (non-adjustable) throttle software, the engine will start and operate at the factory pre-set fast idle setting in either the maximum speed or the intermediate speed position.

The mating connector for all John Deere throttle switches is a Packard Metri-Pack 150 Series two-cavity female connector, #12052641, with #12048074 sealed female terminals, cable seals and a #12052634 TPA or secondary lock.

Katolight Service - Master Repair Manual - Page 2886

Adjustable 3-state Throttle

The adjustable 3-state throttle software requires three switches to operate as intended:

- 3-state Throttle Switch
- Bump Switch
- Bump-enable Switch

3-State Throttle Switch

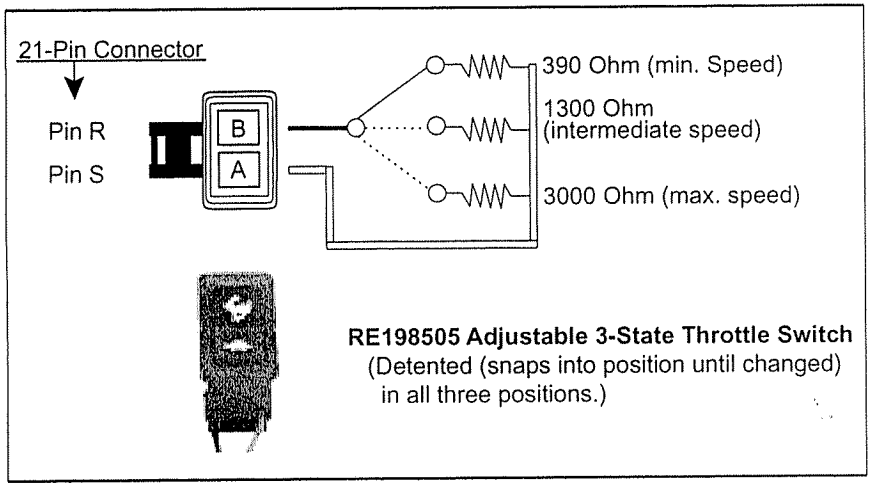

Adjustable 3-state Throttle Switch, RE198505

The John Deere RE198505 3-state throttle switch is a three-position switch, designed to be used with the adjustable 3-state throttle software. Any three-position switch, detented (snaps into place) in all three positions and equipped with resistors in the following range would work:

R = 200-400 Ohms	Engine starts and operates at slow idle. This speed can be adjusted using the bump switches, and the analog throttle inputs are active in this mode.
R = 900-1400 Ohms	Engine starts and operates at the intermediate speed setting. This speed can be adjusted using the bump switches, but not with the analog throttle.
R=2500-5000 Ohms	Engine starts and operates locked at the factory preset fast idle setting.

Katolight Service - Master Repair Manual - Page 2887

Katolight Service - Master Repair Manual - Page 2888

Bump Switch

The bump switch, is used to increase and decrease the minimum and intermediate operating speeds. It must be used with the bump-enable switch. If you do not intend to use this feature, then this circuit does not need to be connected. The bump switch works like the "Accel" and "Coast" buttons on an automotive cruise control system. A momentary tap on the switch bumps the speed up or down about 10 rpm. However, if you hold the switch down, speed will continue to ramp up or down continuously until the switch is released. Then it will lock in at whatever rpm it has reached at that point. If you intend to use this feature, you can use the John Deere RE162423 bump switch shown below, or any single-pole, double-throw, momentary switch with a detented center "off" position.

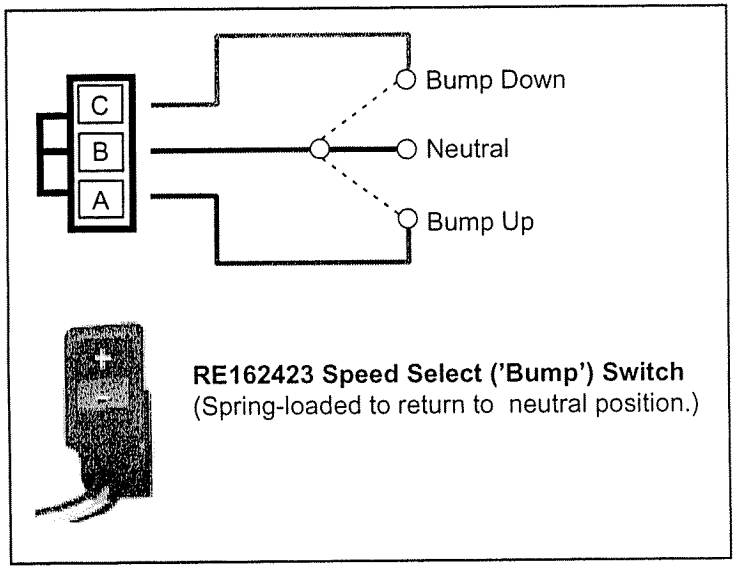

Speed Select ('Bump') Switch, RE162423

The mating connector for the RE162423 switch is shown below. It is a Packard Metri-Pack 150 Series three-cavity male connector, #12129615, with #12045773 sealed male terminals, #12048086 cable seals, and #12052845 TPA or secondary locks.

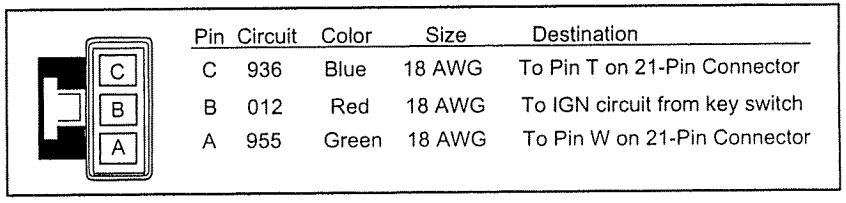

Pin	Circuit	Color	Size	Destination
C	936	Blue	18 AWG	To Pin T on 21-Pin Connector
B	012	Red	18 AWG	To IGN circuit from key switch
A	955	Green	18 AWG	To Pin W on 21-Pin Connector

Mating Connector for RE162423

If you choose not to use the RE162423 switch, you can use any single-pole, double-throw, momentary switch with a detented center "off" position, wired as shown below.

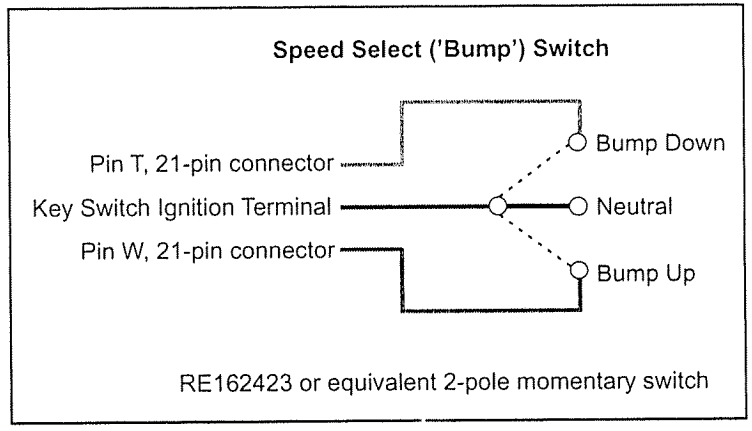

Speed Select ('Bump') Switch Wiring Diagram

Katolight Service - Master Repair Manual - Page 2889

Bump-Enable Switch

The bump-enable switch serves two functions in the adjustable 3-state throttle system. It serves as a safety interlock for the bump switch, and it is used to lock the speed settings in ECU memory.

The bump-enable switch enables the bump switch to be read by the ECU. To adjust the minimum or intermediate operating speeds, the bump-enable switch and bump switch must be operated simultaneously. This prevents unexpected operating speed changes in the event of a failure of the bump circuit.

To permanently set high and low speeds in memory, press the bump-enable button three times after adjustment. Both pre-set speeds (high and low) will be remembered, even if the ignition is turned off or the battery is disconnected.

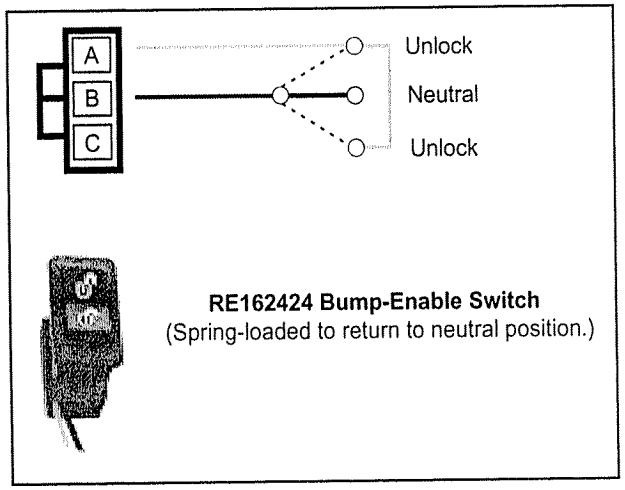

Bump-Enable Switch, RE162424

As a convenience for the operator, we offer the RE162424 bump-enable switch with two enabling positions, up or down, with the center off. That way, when placed next to the RE162423 bump switch, both switches can be pressed simultaneously by laying your finger across them. The switch is a single-pole, double-throw, momentary with a detented center "off" position. Both active positions are wired to connect the same two-wire circuit when pressed.

The mating connector on the RE162424 bump-enable switch is shown below. It is a Packard Metri-Pack 150 Series three-cavity female connector, #12110293, with #12048074 sealed female terminals, #12048086 cable seals, and #12052845 TPA or secondary locks. The unused cavity has a #12059168 cavity plug installed.

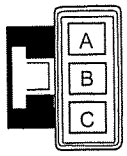

Pin	Circuit	Color	Size	Destination
A	923	Orange	18 AWG	To Pin X on 21-Pin Connector
B	012	Red	18 AWG	To IGN circuit from key switch
C	Plug			Unused

Mating Connector for RE162424

If the RE162424 switch is not used, a simple single-pole momentary switch can be wired as shown below to provide the bump-enable function.

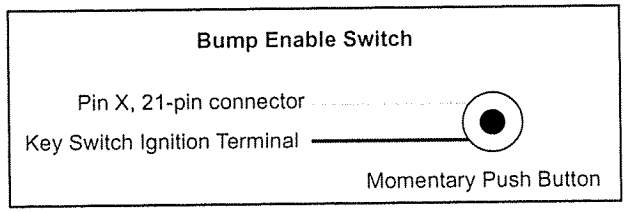

Bump-Enable Switch

If the speed bump feature is not used, this circuit does not have to be connected.

Katolight Service - Master Repair Manual - Page 2890

Diagnostic Gauge - RE68155

We strongly recommend the RE68155 or equivalent SAE J1949 CAN based onboard diagnostic system for all applications. The RE68155 Diagnostic Gauge is a complete on-board engine diagnostic and display system. It includes built-in "Warning" and "Stop Engine" lights to alert the operator of any problems, and it digitally displays diagnostic codes, rpm, hours, oil pressure, coolant temperature, voltage, engine load, fuel consumption, manifold temperature and other engine parameters.

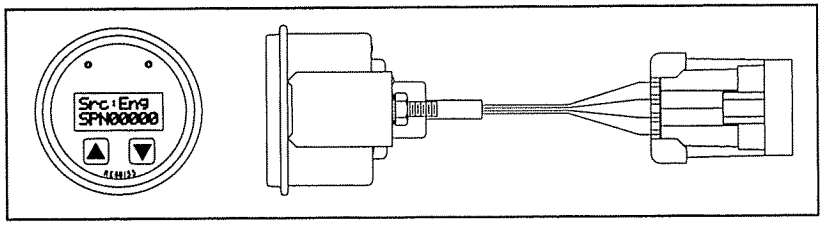

Diagnostic Gauge, RE68155

There are three ways to connect the RE68155 Diagnostic Gauge to your system:

1. Wire the RE68155 Diagnostic Gauge directly to the 21-pin instrumentation and controls connector.
2. Use the RE507276 adapter harness to connect the Diagnostic Gauge to the 9-pin diagnostic connector.
3. Use the RE162450 Databus Module to connect the RE68155 Diagnostic Gauge and up to six auxiliary gauges, plus backlighting, to the 21-pin instrumentation and controls connector.

WIRING THE DIAGNOSTIC GAUGE DIRECTLY TO THE 21-PIN CONNECTOR

Refer to the following illustration to connect the RE68155 Diagnostic Gauge to the 21-pin instrumentation and control connector.

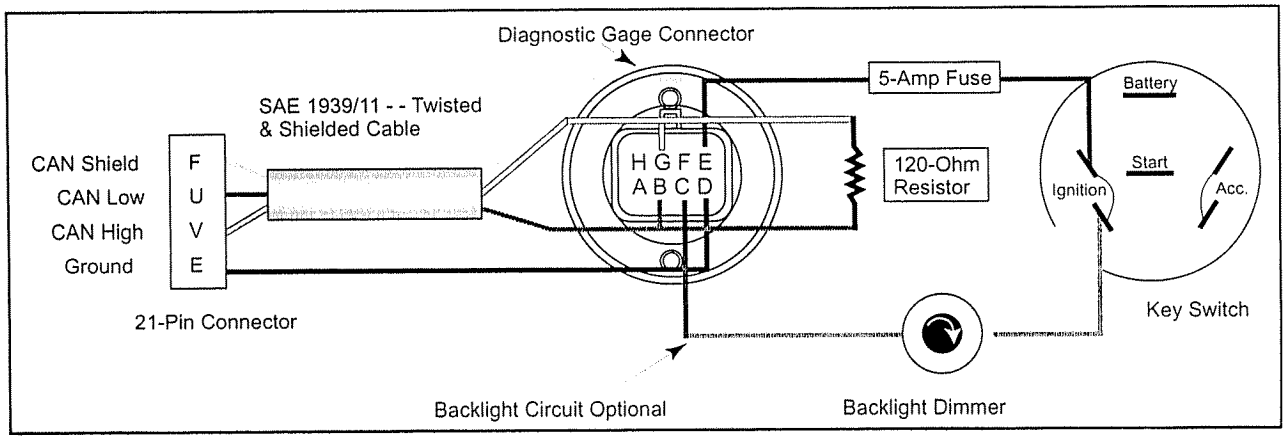

Pin "E" is the battery connection, and has an allowable voltage range of 9 to 32 volts with respect to Pin D, or ground, for proper operation. 18-gauge wires are recommended for all circuits. Wire colors should be as shown in the illustration. These colors are used in all John Deere instrument panels and instrumentation kits, and all John Deere service publications identify the wires by the colors shown.

The mating connector for the diagnostic gauge is a Packard Metri-Pack, 150 Series, 8-way female connector.

Part	Packard No.	Deere No.
Female connector assembly	12047937	57M7261
TPA	12066304	57M7296
Sealed terminals, 16-18 AWG(1.0-.8 sq mm)	12048074	R104846
Sealed terminals, 20-22 AWG(.5-.35 sq mm)	12084200	57M7494
Cable seals, 2.85-2.03 mm dia	12048086	57M7258
Cable seals, 2.15-1.60 mm dia	12089678	57M7493
Cable seals, 1.70-1.29 mm dia	12048087	57M7377

The terminal and cable seals listed are for 16-18 gauge wire. 18-gauge wire is recommended for everything. All of the terminal positions on the diagnostic gauge connector are used. If the mating connector does not use a position for a particular application, it should be filled with a cavity plug, part number 12059168, to ensure sealing of the entire connector assembly.

All the needed connecting wires are in the 21-pin instrument panel connector. If backlighting or auxiliary gauges are not used, then only CAN H, CAN L, CAN Shield, power, and ground must be hooked up to the gauge. Power must come from the ignition terminal of the key switch through a 5-amp fuse.

SAE 1939/11-type shielded cable should be used to connect the CAN H, CAN L and CAN Shield wires from the 21-pin connector to the gauge. SAE 1939/11-type shielded cable is available from many commercial sources including Champlain Cable. To make your own cable, the CAN H and CAN L wires need to be twisted together along their entire length, and shielded with a metal cover. The CAN Shield wire should be a bare copper wire running inside (and contacting) the metal shield alongside the twisted CAN H and CAN L wires. It is recommended to switch to an insulated wire where the wire exits the shield so it does not ground out against anything.

The CAN H and CAN L wires must be connected through a 120-Ohm resister on the end of the harness where they are connect to the diagnostic gauge. If more than one CAN-based device is used, only one 120-Ohm resister should be connected. It must be connected at the end of the CAN bus, where the furthest device from the 21-pin connector is connected.

If backlighting is desired, refer to the schematic and find the corresponding pins in the 21-pin connector. If dimming is desired, normally a dimmer (RE162449) is used. This reduces the voltage to the backlighting from full voltage (about 14 volts for a 12-volt system) for full brightness to about 2 volts for the lowest brightness. If a 24-volt system is used, the voltage regulator (RE162448) should be used to provide 12 volts for the backlighting.

The backlight system is an LED. LEDs require about 2 volts to turn on. The voltage range for the backlighting is about 2 volts to 16 volts.

A 5-Amp fuse with the following characteristics (per SAE J1284) is required:

Rating	Blow Time
110%	100 hours, minimum
135%	1500 seconds, maximum
200%	5 seconds, maximum
350%	0.08 seconds, minimum

USING THE RE507276 DIAGNOSTIC GAUGE ADAPTER HARNESS

An easier way to connect the RE68155 Diagnostic Gauge is to use

Katolight Service - Master Repair Manual - Page 2891

the RE507276 adapter harness, available through service parts. The RE507276 adapter harness connects with the 9-pin Deutsch diagnostic connector, which is present on every engine wiring harness. It includes connectors for the RE162449 backlight dimmer and the RE162448, 24-volt-to-12-volt converter, which is required to operate the 12-volt backlight system with a 24-volt engine electric system. It can also be used with the available RE508492 and RE508493 jumper wires for fixed (constant and non-dimmable) backlighting on 12-volt systems. The RE507276 adapter harness is approximately 12 feet long from the diagnostic port connector to the gauge connector. It includes a standard 3-pin Deutsch CAN connector with 120-Ohm terminator that can be used to transmit the SAE J1939 CAN signal to other devices.

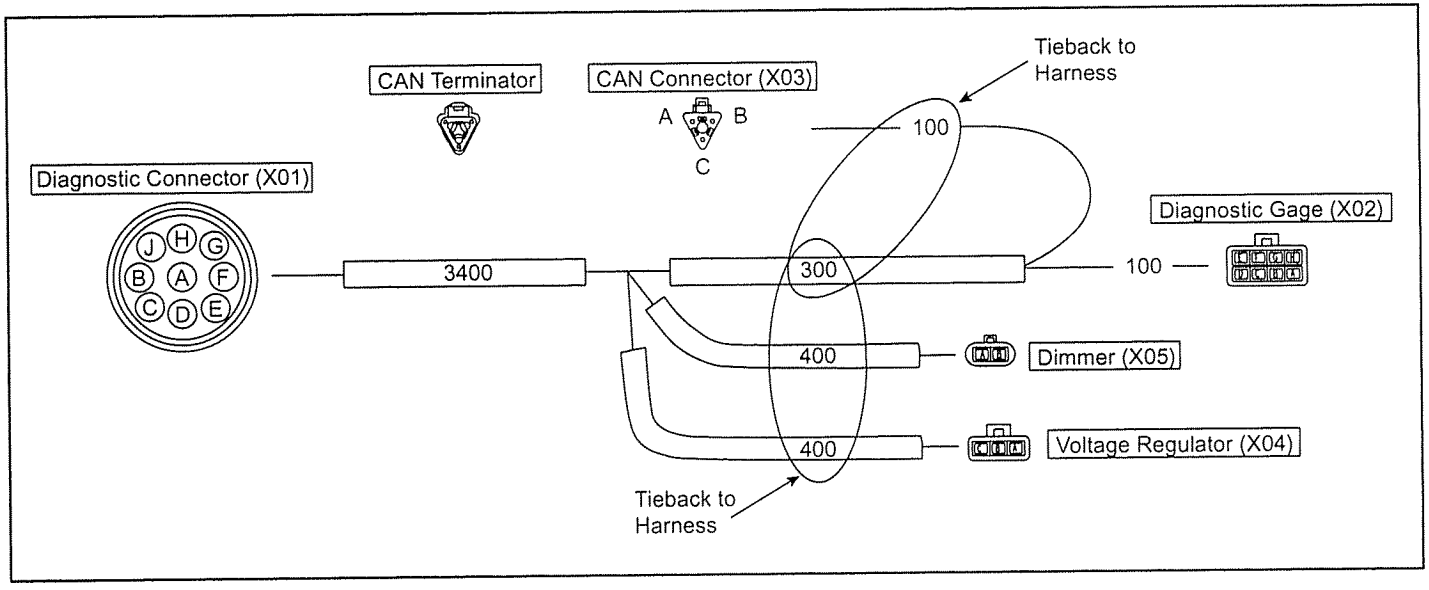

Diagnostic Gauge Adapter Harness, RE507276

The RE507276 adapter harness does not connect to any wires in the 21-pin instrumentation and control connector or any unterminated wires. It connects to the 9-pin diagnostic connector that is normally used only for service. It leaves 21-pin connector and unterminated wires free. It does not include wiring for any auxiliary gauges.

Auxiliary Gauge Wiring

The RE68155 Diagnostic Gauge can drive the following optional auxiliary gauges:

RE163436	Percent load gauge
RE162422	12-volt voltage gauge
RE163277	24-volt voltage gauge
RE162419	Tachometer
RE162418	Gauge, Oil Pressure
RE162416	Gauge, Coolant Temp
RE162427	Audible warning alarm

These are simple display gauges that operate from a second proprietary RS485 bus from the diagnostic gauge.

Katolight Service - Master Repair Manual - Page 2892

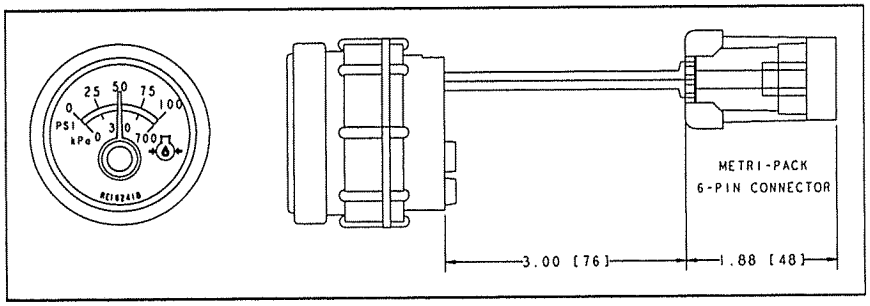

Typical Auxiliary Gauge

The RE162427 audible alarm module is applied in the same way as the analog gauges. The audible alarm module is also prewired for a single-pole, double-throw relay output (normally open / normally closed). The relay output can drive 0.5 Amps at 125 VAC max, 1 Amp at 24 VDC max, or 62.5 VA, 30 Watts max. To connect to the relay, the RE162427 audible alarm module has a second Metri-Pack connector as shown below. The connector mates with a Metri-Pack 150-series, 3-way connector, part number 12110293.

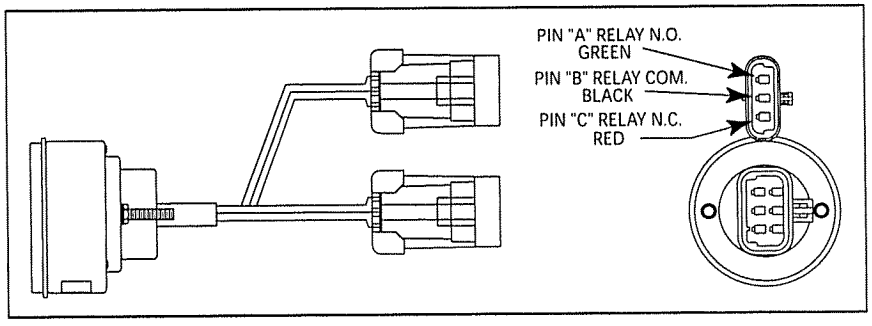

Audible Alarm Module, RE162427

There are two ways to connect the auxiliary gauges, a direct wiring connection, and the RE162450 databus module.

Direct Auxiliary Gauge Wiring

Refer to the following diagram to directly wire auxiliary gauges.

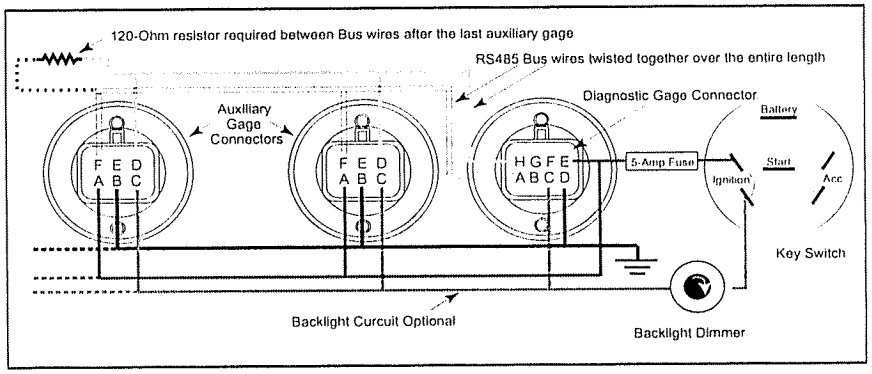

Direct Auxiliary Gauge Wiring Diagram

The diagram is for 12-volt only. Wiring for 24-volt systems is identical, except for the optional backlighting. The backlights in the gauges are 12-volt only. To use backlighting with 24-volt systems, voltage must be converted to 12 volts.

As many auxiliary gauges as desired can be connected in parallel from the diagnostic gauge as shown. Use the wire colors shown to conform to John Deere service publications for ease of trouble shooting and service. The RS485 positive (+) wire is white. The RS485 negative (-) wire is orange. The RS485 + and RS485 - wires must be connected through a 120-Ohm resister after the last auxiliary gauge. The two RS485 buss wires should be twisted together along their entire length for EMI resistance.

The mating connector for the auxiliary gauges is a Packard Metri-Pack, 150-Series, 6-way female connector. The Packard part numbers for the connector are as follows:

Part (for each aux. gauge)	Packard No.	Deere No.
(1) Female connector assembly	12052848	57M7260
(1) TPA	12052850	57M7291
(5) Terminals, female	12084200	57M7494
(5) Cable seals	12048086	57M7258
(1) Cavity plug	12059168	57M7259

Using the RE162450 Databus Module

By far the easiest way to wire the diagnostic gauge and multiple auxiliary gauges is to use the RE162450 Databus Module. It includes shielded wiring and connectors for the diagnostic gauge and up to 6 auxiliary gauges. It also includes plugs for all backlighting accessories and 120-Ohm terminators for the SAE J1939 CAN buss and the proprietary auxiliary gauge buss. It is included with RE162429 panel and RE508625 kit or available separately from parts.

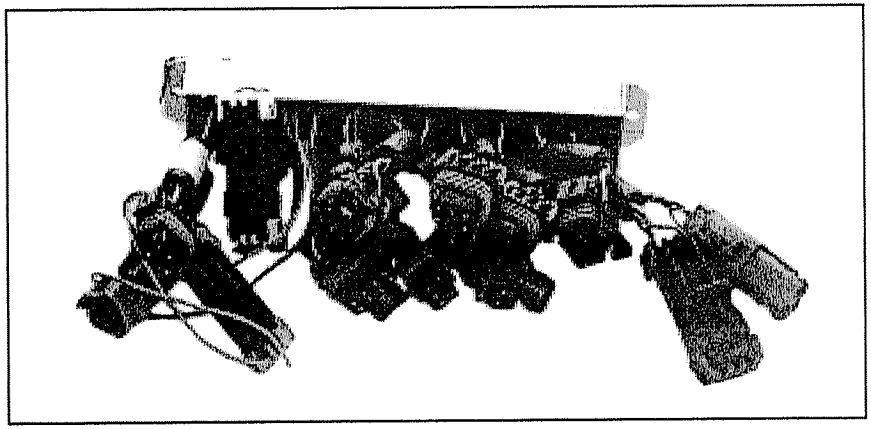

Databus Module, RE162450

The diagnostic gauge, all backlighting accessories, and all six auxiliary gauges plug right into the databus module. Only the CAN link and power and ground connectors have to be provided by the user.

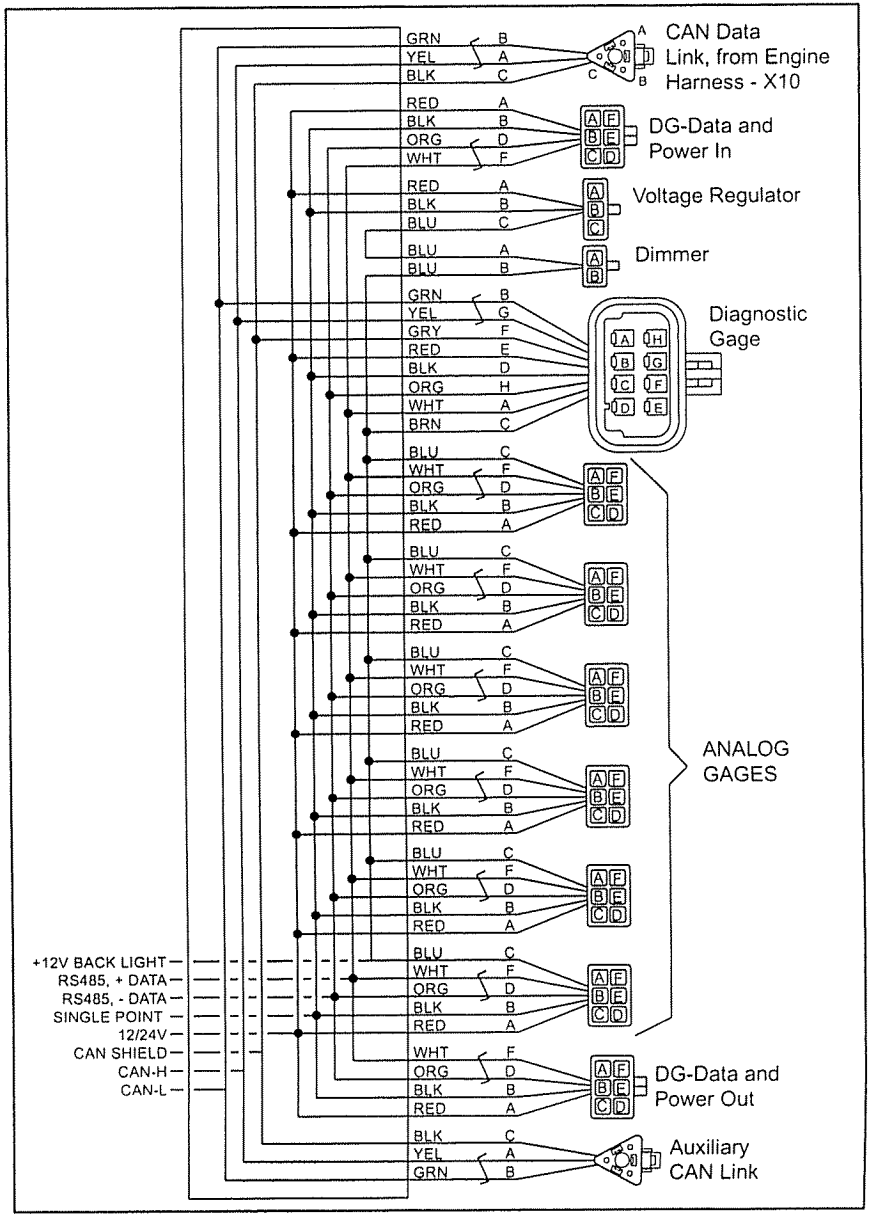

Databus Module Wiring Schematic (RE162450)

Katolight Service - Master Repair Manual - Page 2894

For installation of gauges and backlighting accessories, refer to the following diagram.

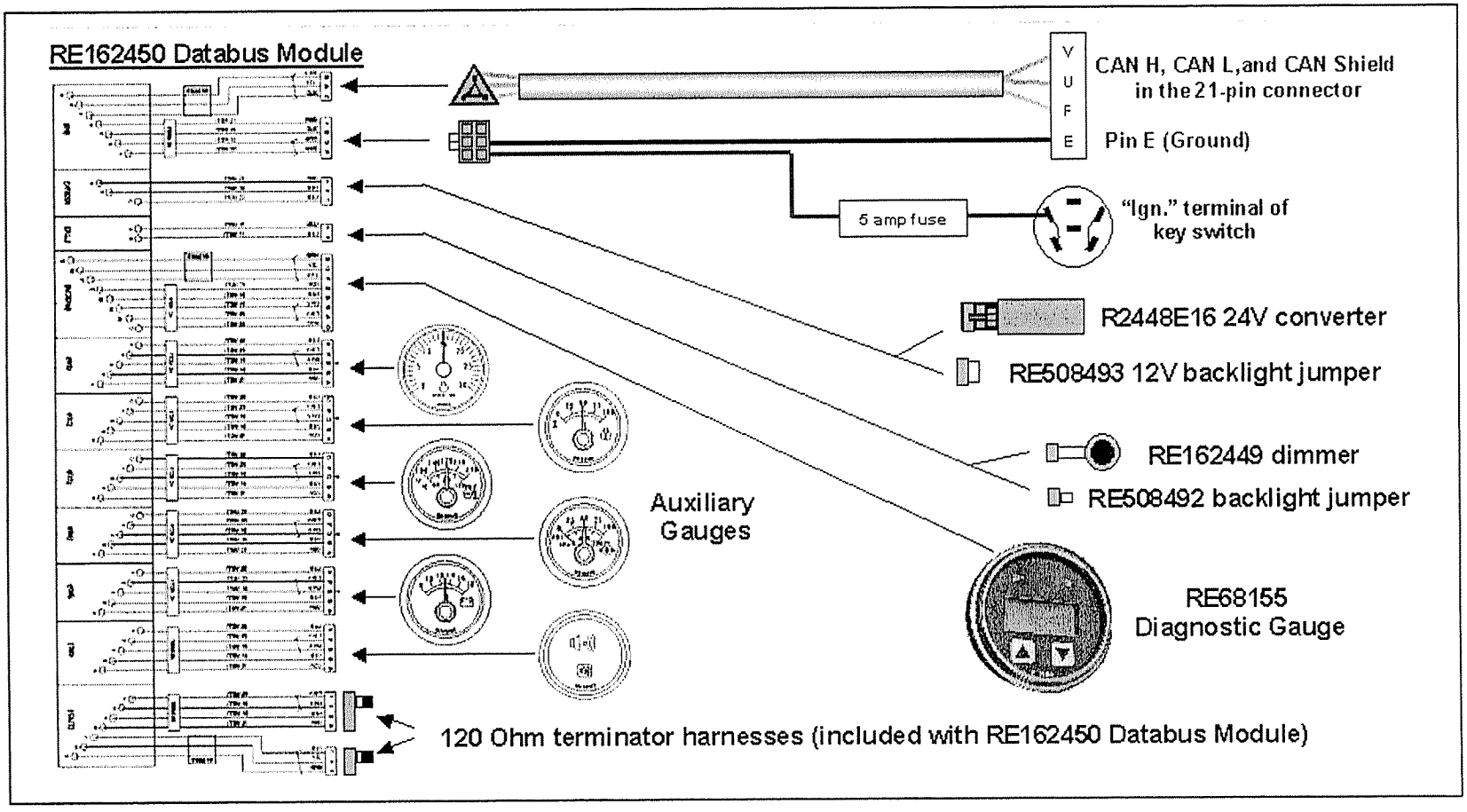

Databus Module (RE162450); Gauges and Backlighting Accessories

For wiring details for CAN Connector, Power Connector and Backlighting Connections, refer to the following three sections.

Katolight Service - Master Repair Manual - Page 2895

CAN CONNECTION TO RE162450 DATABUS MODULE

The CAN connection to the databus module is made through SAE J1939 compatible shielded, twisted-pair cable. The mating connector for the databus CAN connection is a Deutsch DT06-3S-E003 connector with W3S-1939 secondary locking wedge, as shown below. It plugs into the databus as shown. The shield is attached to black wires at each end for proper termination in the connectors.

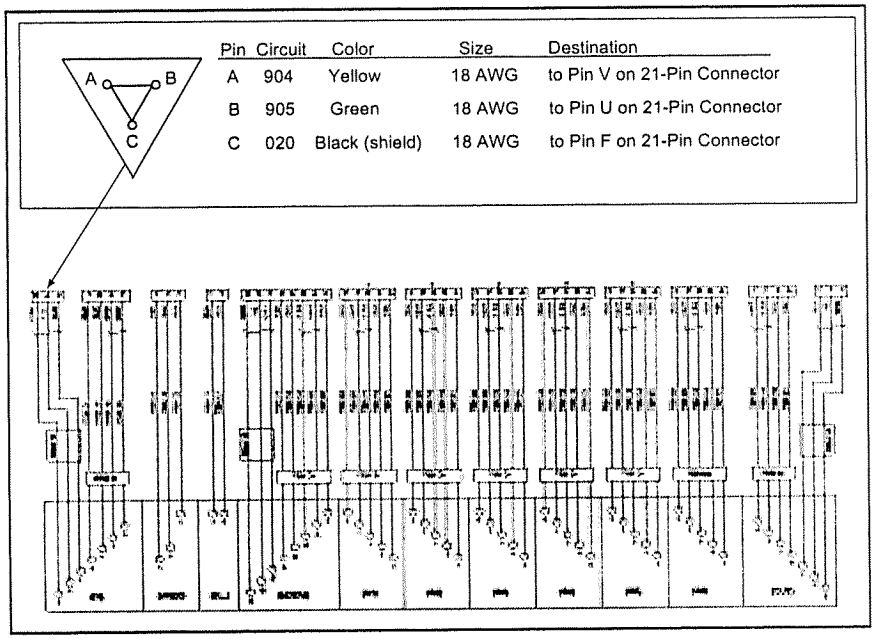

CAN Connection to the Databus Module

SAE 1939/11 shielded cable is available from various suppliers, including Champlain Cable.

POWER CONNECTION TO THE DATABUS MODULE

Power is provided to the databus module through a Packard Metri-Pack 150 Series 6-cavity male connector, #12124107, with #12045773 sealed male terminals, #12048086 cable seals, and #12052845 TPA or secondary locks on the instrument panel harness. The unused cavities are plugged with #12059168 cavity plugs. The mating connector is shown below. It plugs in to the databus as shown.

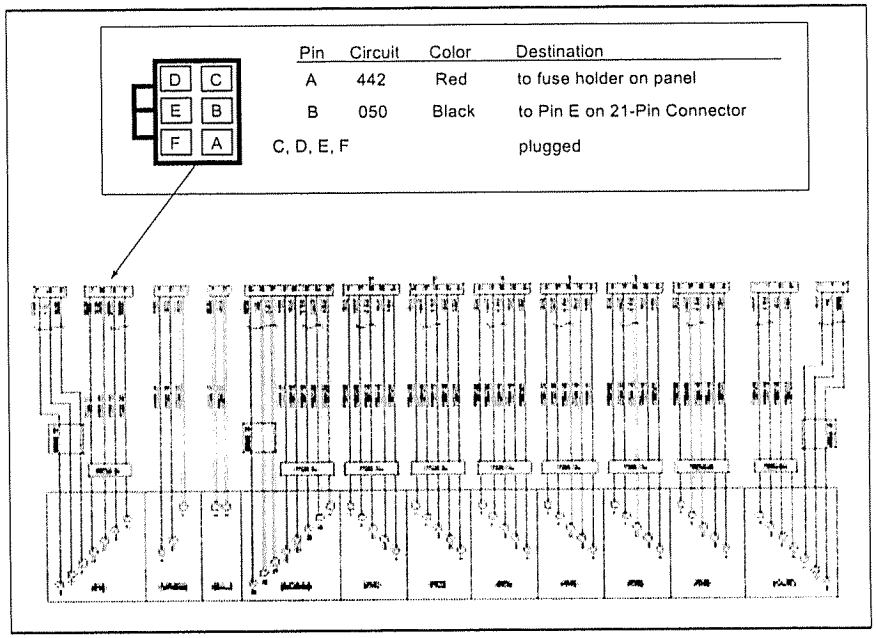

Power Connection to the Databus Module

Katolight Service - Master Repair Manual - Page 2896

BACKLIGHTING CONNECTIONS TO THE DATABUS MODULE

For 12-volt operation, the RE508493 12-volt backlight jumper should be installed. This provides 12-volt power directly to the backlight circuit. For 24-volt operation, an RE162448 24-volt-to-12-volt converter must be plugged into the 3-pin connector to reduce 24-volt battery power to 12 volts.

Do not leave the RE508493 12-volt backlight jumper in place for 24-volt operation. This provides 24 volts to the 12-volt instrumentation backlights, and will result in failures of the Diagnostic Gauge, tachometer, and all other auxiliary gauges. Always order and install the RE162448 24-volt-to-12-volt converter for 24-volt backlighting. The gauges will operate on either 12 or 24 volts. RE162448 is only required if backlighting is used.

Wiring of the dimmer connector is the same for 12-volt or 24-volt operation. For "no backlighting," do not connect anything to this connector. For backlighting to be fully "on" all the time, install the RE508492 jumper wire. To turn backlighting on and off, a simple on/off toggle switch can be added to the wire between on the RE508492 jumper.

Shutdown Override Switch

The shutdown override switch is a single-pole, single-throw, normally-open, momentary switch used to temporarily override an engine shutdown.

On Engine ECU's with the Engine Protection Shutdown feature active, the engine protection shutdowns can be overridden for 30 seconds at a time. The Shutdown Override is activated when Pin P on the 21-pin connector is connected to Pin N on the 21-pin connector.

A special RE163465 push-button assembly is available from John Deere for this purpose that plugs directly into the shutdown override connector. The harness connection for the RE163465 shutdown override button assembly is a Packard Metri-Pack 150 Series, two-cavity male connector, #12162000 with #12045773 sealed male terminals, cable seals and a #12052634 TPA or secondary lock.

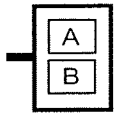

Pin	Size	Destination
A	18 AWG	to Pin "N" on 21-Pin Connector
B	18 AWG	to Pin "P" on 21-Pin Connector

Mating Connector for the Shutdown Override Switch

If you choose not to use the RE163465 push-button assembly, any normally open momentary switch, wired as shown below, can be used.

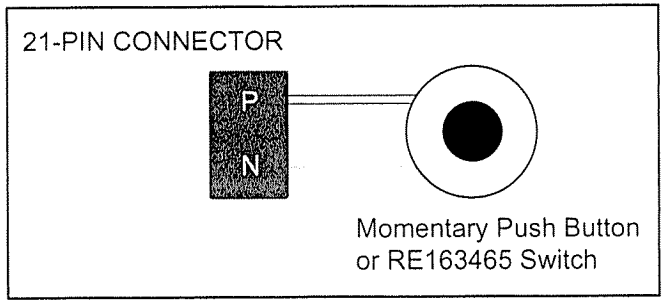

Shutdown Override Switch, RE163465

If the circuit is open (button not pushed), the engine will shutdown 30 seconds after an automatic shutdown sequence starts. Each time the circuit is completed (button pushed), the shutdown timer is reset to a full 30 seconds and the engine runs in a derated power mode. Repeated connection of the Shutdown Override circuit each 30 seconds allows for continued engine operation.

Manually shutting down the engine and turning power "Off" to the ECU also resets the 30-second clock. Using the Shutdown Override is not required on engine starts or restarts if the ECU power has been turned "Off."

Note: The shutdown override button is also used to activate the Blink-Code diagnostic system. It is required if you do not have the RE68155 diagnostic gauge or other CAN-based diagnostics with their own warning lamp, even if you do not use automatic shutdowns.

Katolight Service - Master Repair Manual - Page 2897

Auxiliary "Warning" Lamp

Pin H can be used to switch a customer-supplied fault lamp "On" during a system fault condition. It is designed to operate the ground side of a 12-volt or 24-volt indicator light. Pin H should be connected to the ground terminal of a 12-volt or 24-volt light bulb socket. The positive terminal of the light bulb socket should be connected to positive system voltage (Pin G or J). Pin G and J ("ignition" and "accessory") are always "live" with 12 or 24 Volts when the key is on. Pin H acts as the switch to ground.

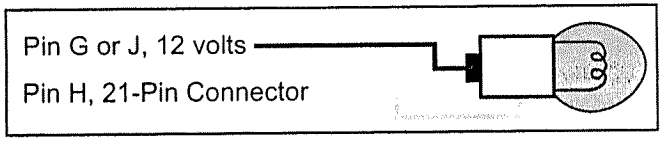

Auxiliary "Warning" Lamp Wiring

The lamp blinks when a "Warning" problem is detected by the ECU, and glows steadily when a "Stop-Engine" fault is detected.

This circuit supports a maximum current of 100 mA. It should not be used to drive any load larger than a 1-Watt bulb. For driving larger loads, such as audible alarms, installation of the RE162427 alarm module that plugs into the databus module in the instrument panel is recommended. It includes a relay for additional loads up to 0.5 Amps at 125 Volts AC, 1 Amp at 12-24 Volts DC, or 62.5 VA, 30 Watts max.

Connecting this terminal is not required if the RE68155 diagnostic gauge is used. The RE68155 diagnostic gauge already has amber and red "Warning" and "Stop Engine" lamps built in.

Note: The warning light driver also serves as the "blink light" for blink-code diagnostics. It is required if you do not have the RE68155 diagnostic gauge or other CAN-based diagnostics with their own warning lamp.

Tachometer Output - Pin K

Pin K is provided to drive a user-supplied tachometer. It can be used if the OEM prefers a tachometer other than the RE162419 auxiliary analog tachometer used with the RE68155 diagnostic gauge.

Output is a 30-pulse-per-revolution square wave from zero volts to +5 volts for both 12-volt and 24-volt ECUs. Output voltage is the same regardless of RPM. Only frequency changes with RPM.

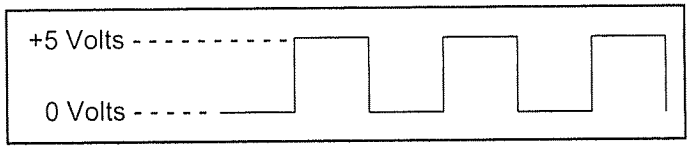

Tachometer Output

Katolight Service - Master Repair Manual - Page 2898

Intake Air Heater Wait Lamp

The John Deere Electronic Control system can be used to automatically turn on the electric intake air heater starting aid on 4.5 L / 6.8 L DE10 engines. A "wait lamp" can be added to the instrument panel, which illuminates when the ignition key is switched to the "Run" position and the temperature is low enough to require intake heat. It remains illuminated until the intake heater has had sufficient time to heat the intake air adequately for starting. The operator can then turn the key the rest of the way to the "Start" position.

To use the 12-volt wait lamp feature, you can either order and install one RE67334 wait lamp assembly, or use your own lamp. The RE67334 wait lamp assembly connects with two 0.187-inch insulated female, solderless disconnect terminals, similar to Amp #640919-1. Connect one wire to the ignition terminal of the key switch and the other wire to Pin A of the 21-pin connector. For 24-volt operation, remove the 12-volt light bulb from the RE67334 assembly, and replace with a R132093 (24-volt) bulb.

If you chose to provide your own wait lamp assembly, any 1-Watt or smaller bulb can be used. This circuit supports a maximum current of 100 mA. It should not be used to drive any load larger than a 1-Watt bulb. Connect the bulb as shown below.

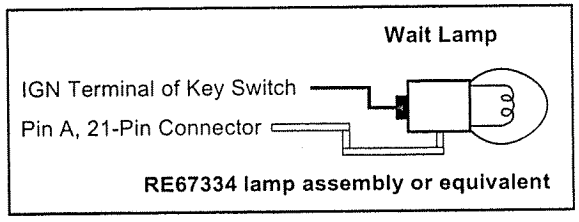

Intake Air Heater Wait Lamp Wiring

Intake Heater Control Wire (Standard and Extended-feature Systems)

Wire #429 (white), located inside the plastic wiring harness cover just behind the manifold air temperature sensor, has been provided to operate a relay that turns the intake air heater starting aid on and off. It provides a switched source of +12 or +24 volt battery power to operate the relay. The intake heater is "On" whenever the ignition switch is in the "Run" position and the temperature is low enough to require intake heat. It stays on until shortly after the engine starts. The load side of the relay that is attached to the heater must be rated for at least 100 amps continuous, and the switch side must not draw more than 1 amp. To limit switch current, the coil resistance of the relay should be at least 15 Ohms. We recommend John Deere relay, AH160278.

Important: If a relay with less than 15-Ohm coil resistance is used, or if current through Wire #429 exceeds 1 amp for any other reason, the ECU will be damaged.

A relay installation such as shown below is normally required.

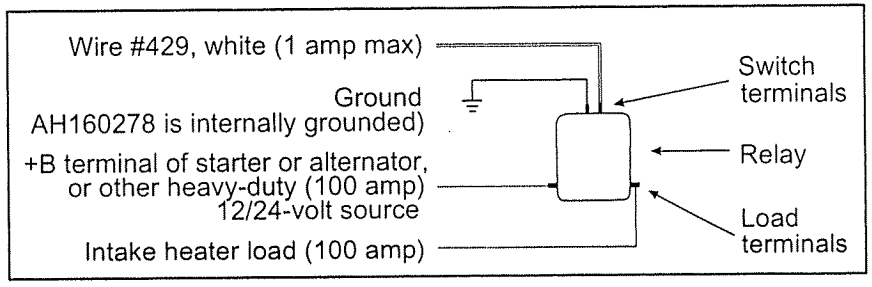

Two-stage Relay Installation

Katolight Service - Master Repair Manual - Page 2899

23-Pin (Deutsch) Auxiliary Connector

A 23-pin Deutsch connector makes the connection for optional features available with the optional full-featured ECU that are not included in the standard 21-pin instrumentation and controls connector. You will have to provide this connector with pin assignments per the following chart.

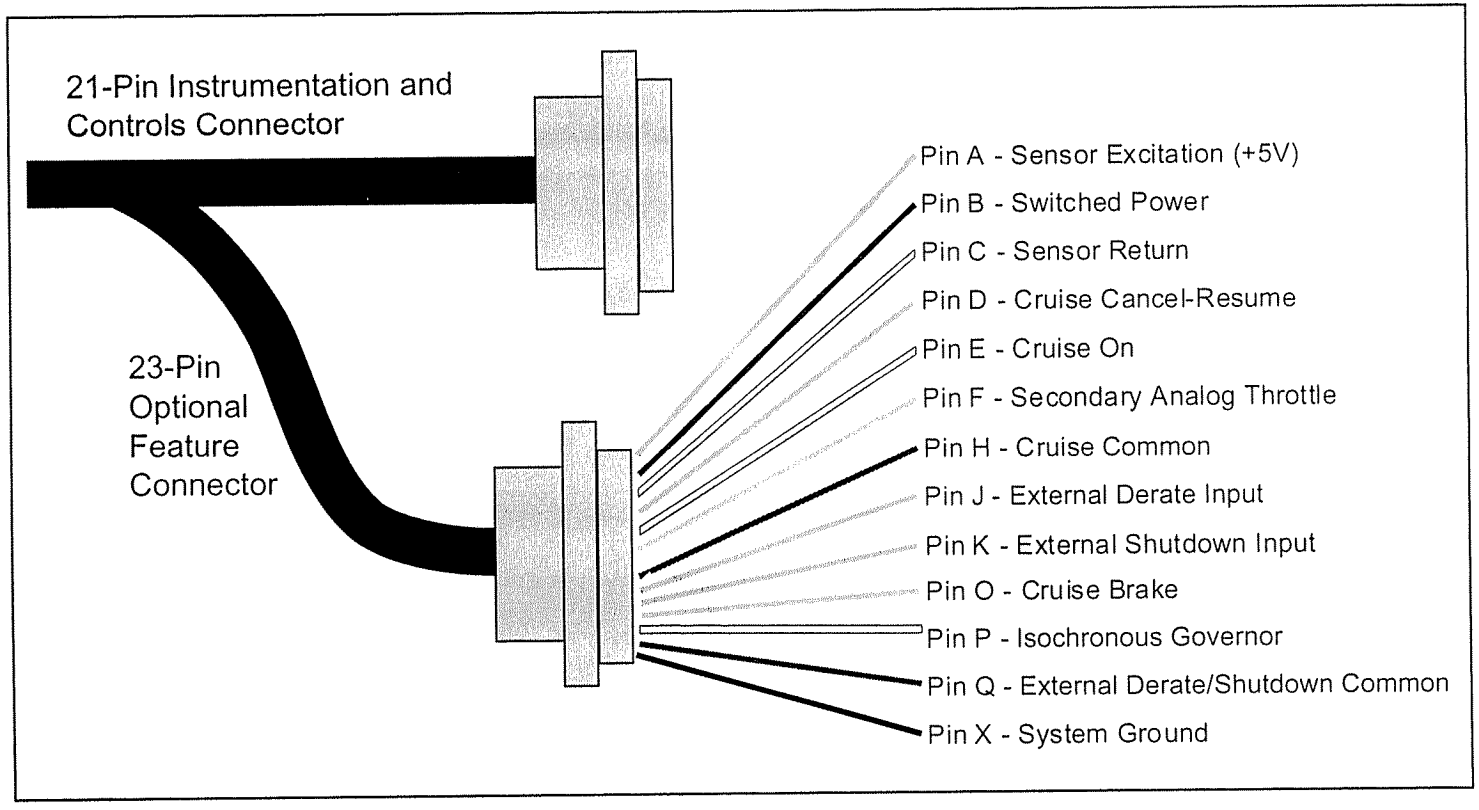

23-Pin Auxiliary Connector

Katolight Service - Master Repair Manual - Page 2900

Wire colors should be as shown in the chart and illustration. These colors are used in all John Deere instrument panels and kits, and all John Deere service publications identify the wires by the colors and circuit numbers shown.

Pin	Circuit No.	Color	Wire Gauge	Description	Comments
A	911	brown	16	Sensor excitation (+5v)	To the secondary analog throttle
B	012	red	16	Switched power	Power to cruise control circuits
C	914	yellow	16	Sensor return	To the secondary analog throttle circuit
D	981	brown	16	Cruise cancel/resume; External Derate	Cancel/Resume. See cruise control wiring instructions.
E	954	yellow	16	Cruise on	Cruise on. See cruise control wiring instructions.
F	913	orange	16	Secondary analog throttle	To the 'wiper" terminal of the primary analog throttle potentiometer, or throttle emulator
G	n/a			Not used	
H	012	red	16	Cruise Common	Must be used to complete Cruise On, Cruise Cancel/Resume, and Cruise Brake circuits.
J	981	brown	16	External derate input	To customer derate control. Connect to Pin Q (derate/shutdown common) to derate.
K	941	brown	16	External shutdown input	To customer shutdown control. Connect to Pin Q (derate/shutdown common) to shutdown.
L	n/a			Not used	
M	n/a			Not used	
N	n/a			Not used	
O	923	orange	16	Cruise brake	Cruise brake (when cruise control option is specified), otherwise not normally connected at this point. This circuit is shared with the adjustable 3-state throttle circuits in the 21-pin connector.
P	954	yellow	16	Isochronous governor	Connect to Pin A (+5-volt reference) to select isochronous governor.
Q	012	red	16	External derate/ shutdown common	Must be used to complete the customer derate and shutdown circuits. See Pins J and K.
R	981	brown		Not used	For future use.
S	n/a			Not used	
T	n/a			Not used	
U	n/a			Not used	
V	n/a			Not used	
W	n/a			Not used	
X	050	black	16	System ground	General system ground. Not for sensor return.

Whenever possible, wires should also be identified with the circuit numbers shown. Use one 57M7749 Connector (Deutsch HDP26-24-23SE), eleven 57M7546 16-18 ga sockets (Deutsch 1062-16-0122 41), and twelve R78069 plugs (Deutsch 114017).

Katolight Service - Master Repair Manual - Page 2901

Wire colors and circuit numbers should be as shown in the chart if possible to aid in troubleshooting and service using John Deere service facilities, service publications, and service equipment. Specifications for the mating connector are as follows:

Deutsch Part Number	Deere Part Number	Cavities	Description	Material	Plug	Seal
HDP26-24-23SE	57M7749	23	HD30 Plug (Plastic)	Black Plastic	Yes	No

Deutsch Part Number	Deere Part Number	Gauge	Description	Material	Plating	Seal
1062-16-0622	57M8165	20	Stamped And Formed Socket	Copper Alloy	Nickel	No
1062-16-0122	57M7546	18 - 16	Stamped And Formed Socket	Copper	Nickel	No
114017	R78069		Deutsch Cavity Plug	Plastic		

Cruise Control (Extended-feature ECUs Only)

The cruise-control feature is an option that is only available on Extended-feature ECUs without selectable isochronus governing, adjustable 2-state or 3-state throttle, or an external derate input. It is intended for use on mobile applications. Refer to the following diagram when wiring the cruise control feature.

Note: The resume/coast and set/accel connections are made in the 21-pin instrumentation and controls connector. All others are in the 23-pin optional feature connector.

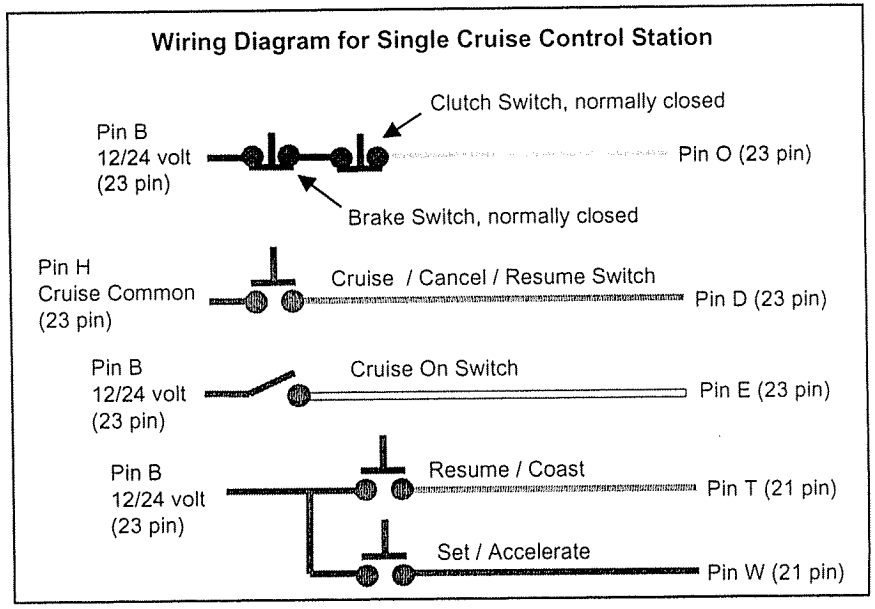

Cruise Control Wiring Diagram, Specific for DE10 Fuel Systems

Katolight Service - Master Repair Manual - Page 2902

The cruise control circuits shown on the chart above are connected to the 23-pin optional feature connector, except for Pins T and W. For details of each circuit and feature, refer to the following individual circuit instructions.

Cruise On - Pin E

The cruise control at the operator's station can be turned "ON" by connecting Pin E to 12/24 volts (Pin B) on the 23-pin optional feature connector

One other condition must exist for the cruise control function to be active. The Cruise Brake Enable - Pin O must be connected to the positive system voltage lead (Pin B).

Cruise Resume / Coast - Pin T, 21-pin Cconnector

The cruise resume/coast feature shares an input circuit with the adjustable 3-state throttle bump-down feature. Therefore, Pin T for cruise resume/coast is taken from the 21-pin instrumentation and controls connector, not the 23-pin optional feature connector.

At the cruise control station, a momentary contact switch should be connected from Pin T in the 21-pin instrumentation and controls connector to Pin E in the 23-pin optional feature connector. When the cruise control is "ON," a momentary contact on this circuit will return the engine speed to it's previous set speed. When contact is maintained, the engine speed set point will slowly decrease. The Cruise Resume / Coast function has a ramped speed adjustment rate. The engine speed will decrease faster the longer the contact is held "ON."

Cruise Brake Enable - Pin O

The Cruise Brake Enable - Pin O should be connected to system voltage (Pin B) through a normally closed switch on the vehicle brake system. When the brakes are engaged, the circuit will be broken and the cruise control will disconnect but will retain the engine set speed in memory. For a transmission with a clutch, normally closed clutch and brake switches in series should be used.

Cruise Set / Accelerate Pin W, 21-pin Connector

The cruise set/accel feature shares an input circuit with the adjustable 3-state throttle bump-up feature. Therefore, Pin W for cruise set/accel is taken from the 21-pin instrumentation and controls connector, not the 23-pin optional feature connector.

At the cruise control station, a momentary contact switch should be connected from Pin W in the 21-pin instrumentation and controls connector to Pin E in the 23-pin optional feature connector. When the cruise control is "ON," a momentary contact on this circuit will set the engine speed in memory. When contact is maintained, the engine speed set point will slowly increase. The Cruise Set / Accelerate function has a ramped speed adjustment rate. The engine speed will increase faster the longer the contact is held "ON."

Cruise Cancel/Resume - Pin D

The Cruise Cancel/Resume circuit (Pin D) is connected to cruise common (Pin H) with a momentary contact switch. A high quality switch with gold contacts should be used.

The Cancel/Resume function is active for one minute while the operator turns the vehicle around. If the Cancel/Resume contact is not made, the engine reverts to normal cruise control (i.e., resuming speed requires using the "Resume" switch).

Cruise Cancel/Resume will not resume at engine speeds below 1300 RPM.

External Stop-Engine Input (Extended-feature ECUs Only)

Pin K on the 23-pin optional feature connector can be connected to a customer-supplied immediate external shutdown input. This allows the OEM to trigger an immediate shutdown from external switches, such as a loss of prime switch, or hydraulic overtemperature switch. When this circuit is open (Pin K not connected to anything), the engine operates normally. When Pin K is connected to shutdown/derate common (Pin Q on the 23-pin connector), the ECU shuts the engine off immediately and triggers a fault code (see the Operator's Manual). Any number of normally open switches that close to Pin Q on the 23-pin connector to trigger the shutdown can be added in parallel.

Note: The External Shutdown function is always active, even if an ECU without shutdown is specified. This circuit provides an immediate shutdown, with no delay period and no opportunity to override.

Katolight Service - Master Repair Manual - Page 2903

Katolight Service - Master Repair Manual - Page 2904

External Derate Input (Extended-feature ECUs Only)

Pin J on the 23-pin optional feature connector can be used to allow the OEM to trigger a 20% reduction in engine power from external switches, such as a loss of prime switch, or hydraulic over-temperature switch. When this circuit is open (Pin J not connected to anything), the engine operates normally. When Pin J is connected to shutdown/derate common (Pin Q on the 23-pin connector), the engine derates at a rate of 2% per minute for a total derate of 20% in 10 minutes. A fault code and warning light is also generated. If the circuit opens during that time, the engine increases power at 2% per minute until reaching full power. Once the engine returns to full power the warning light turns off.

Note: The External derate function is always active (on extended-feature con-cruise-control ECUs), even if an ECU without derate is specified. If you do not wish to use this feature, do not connect anything to the wires.

Isochronous Governor Select

Pin P in the 23-pin optional feature connector is used to choose between isochronous governing and droop governing. When Pin P is not connected to anything (open circuit), normal droop governing is selected. When Pin P is connected to 12/24 volts (Pin B in the 23-pin optional feature connector), isochronous governing is selected.

Normal droop gives a drop in engine speed with an increase in load or an increase in engine speed with a decrease in load. The normal % droop for your engine (usually 5-10%) will be listed in the 1600 engine option group and on the Engine Performance Curve. When isochronous governing is selected, the droop is set to 0%, and there is no change in engine speed with changing loads until the engine torque limit is reached.

Secondary Analog Throttle Potentiometer

The "Secondary" analog throttle can be used with or without the "Primary" analog throttle installed.

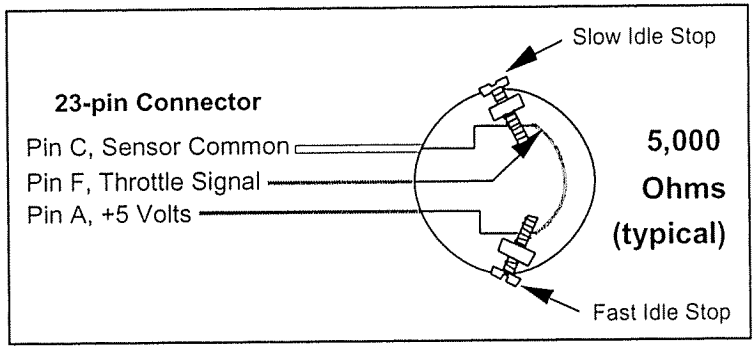

Secondary Analog Throttle Potentiometer

The secondary analog throttle feature is intended for use when a foot throttle and a hand throttle must both be provided. It can also be used when two throttle inputs are operated by the same lever or pedal for back-up purposes. When both analog throttles are used, the throttle signals will be additive, up to the factory pre-set fast idle setting or the maximum speed set with the Adjustable 3-state Throttle. There will be no "dead band" in either throttle. When you move the foot throttle, speed will immediately increase regardless of where the hand throttle is set.

The secondary analog throttle feature is <u>not</u> intended for use with two throttles located remotely from each other. Because the throttle signal is additive, if either throttle is at the full speed position, the other throttle will have no control. Both throttles must be in the slow idle position for the engine to operate at slow idle.

For remote throttle applications, we suggest the use of the cruise control feature instead of the secondary throttle.

If used, the secondary analog throttle must be wired and adjusted exactly the same as the primary analog throttle. It can be used with the RE69667 potentiometer throttle or any similar unit.

Remote On / Off Connector

A male, 2-way Metri-Pack 280 connector is provided in the optional extended-feature Engine/ECU wiring harness for an auxiliary on/off switch. This connector is intended for use in applications that need a second on/off control in series with the usual key switch. Typical applications would be modem-based remote dispatch systems that use a single electric relay to turn the engine on and off, or applications that require a second manual "kill" switch.

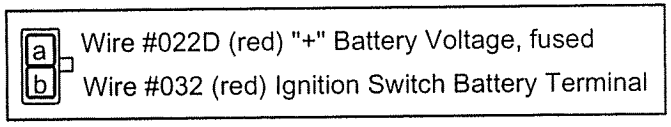

Remote On / Off Connector

An RE508001 jumper harness is installed in the connector at the factory for normal operation. As long as Wires #022D and #032 (Pins A and B) are connected, the system operates normally. When that connection is broken, the engine shuts off normally. No fault codes are generated.

To use the remote on/off feature, cut the jumper wire on the RE508001 connector and install a relay or manual switch in the line.

When used in conjunction with the RE162429 instrument panel, this connector is in series with the key switch. Therefore, both switches must be "On" to operate the engine, but either switch can turn the engine "Off." The key switch in the panel acts as a "lock-out." The remote on/off connection only turns the system on and off. It does not activate the starter. If remote start capability is required, a separate remote starter relay control with speed cut-out must be provided by the OEM.

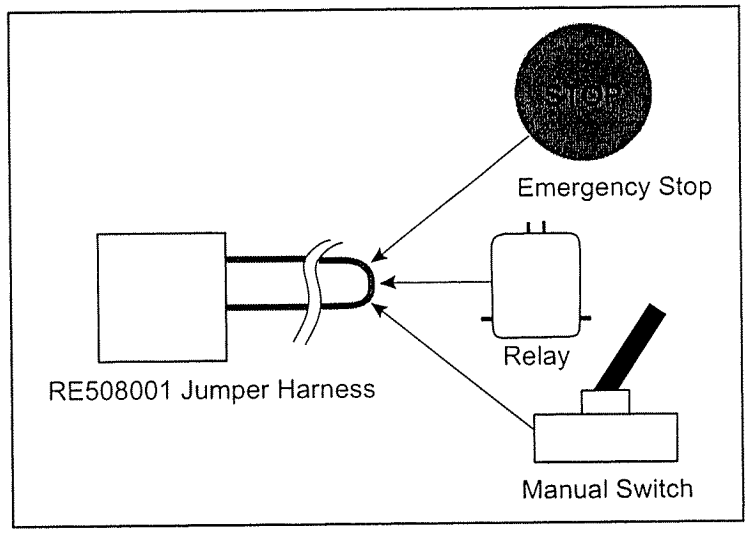

Jumper Harness (RE508001) Installation

Katolight Service - Master Repair Manual - Page 2905

MANUFACTURING A COMPLETE ENGINE WIRING HARNESS

The engine wiring harness connects the ECU and all engine-mounted sensors and actuators to the 21- pin instrumentation and controls connector, the 23-pin optional feature connector, and several diagnostic and auxiliary connectors. We strongly recommend that the standard John Deere factory-supplied engine wiring harness be used. The engine wiring harness is critical to proper engine function and reliability. Some of the connectors used are highly specialized and hard to obtain, and some are proprietary to John Deere and not available to the general public.

This document does not provide enough information to manufacture the complete engine wiring harness. In addition to this document, a copy of the RE517140 ECU wiring diagram and the latest manufacturing drawing of the standard John Deere wiring harness for your engine will be required. Only the specified John Deere sensors can be used with the JDEC controller.

We strongly recommend following the John Deere harness drawing as closely as possible, varying only cable lengths as needed to fit your installation. All cable lengths that connect engine-mounted components such as sensors and actuators must be exactly per the print. All connectors shown on the John Deere wiring harness drawing must be provided, including all diagnostic connectors and the CAN terminator connector.

Please use the same wire colors and circuit numbers shown on the print, so service technicians will be able to troubleshoot the system using our standard procedures and manuals. We strongly recommend that you use the same 21-pin instrument panel and 23-pin optional feature connectors used on the John Deere harness. Not only will that facilitate service, but many of our customers find it very useful to be able to plug in one of our standard instrument panels for diagnostic and experimental purposes.

Starter relay connections are included in our harness, but you can operate the starter relay separately from the engine harness if you prefer. You can also bring 12-volt power to your key switch separately from the engine wiring harness if needed, to carry high accessory loads. However, the main engine power connections must be made directly to the battery (not the starter terminal) through the unterminated battery connection circuits shown on the John Deere wiring harness drawing.

Other unterminated wires shown on the John Deere wiring harness drawing and all wires in the 23-pin optional feature connector are optional and can be left out if not used. For operating and wiring details of each circuit, please refer to the Instrumentation and Controls wiring section of this document.

Katolight Service - Master Repair Manual - Page 2906

REFERENCE INFORMATION

"Metri-Pack" and "Weather Pack" connectors are products of the Packard Electronics Division of Delphi Automotive Systems.

Delphi Automotive Systems
Worldwide Headquarters, United States & Canada Headquarters
One Pontiac Plaza
Pontiac, Michigan 48340-2952
USA
Toll Free: [1] 888.255.7179
Tel: [1] 810.857.4323
Fax: [1] 810.857.4248
web: http:\\www.delphiauto.com/electric/

Delphi Automotive Systems
Asia Pacific Headquarters
1-1-110 Tsutsujigaoka
Akishima-shi, Tokyo 196
Japan
Tel: [81] 425.49.7200
Fax: [81] 425.42.3018
Delphi Automotive Systems
European Headquarters
117 Avenues des Nations, BP 60059
Zac Paris Nord II
95972 Roissy Charles de Gaulle Cedex
France
Tel: [33] 1.4990.4990
Fax: [33] 1.4990.4950

Delphi Automotive Systems
Mexico & South American Headquarters
Av. Goiás, 1820
São Caetano do Sul
São Paulo 09550-050
Brasil
Tel: [55] 11.741.9500
Fax: [55] 11.741.9599

For information on SAE J1939 CAN standards contact:

Society of Automotive Engineers (SAE)
400 Commonwealth Drive
Warrendale PA 15097-0001
USA
Tel: 412-776-4841
Fax: 412-776-5760
Email: isales@sae.org
web: http:\\www.sae.org/

Electronic Throttle Manufacturers:

Teleflex Morse Electrical Systems
(formerly Morse Controls)
6980 Professional Parkway East
Sarasota, FL 34240
USA
Tel: 941-907-1000
Fax: 941-907-1020
web: http://www.tflx.com
Technical Support: techsupport@tflx.com

SAE 1939 Cable Manufacturer:

Champlain Cable
175 Hercules Drive
Colchester, Vermont 05446
Tel: 800-451-5162
Fax: 802-654-4224
web: http:\\www.champcable.com

Katolight Service - Master Repair Manual - Page 2907

Electronic Engine Controls -- JDEC (8.1 L)

Contents / Notes

Page

Introduction ..... AG-14 - 3

Converting From The Old System ..... AG-14 - 3

Software ..... AG-14 - 5
- Governor Operation ..... AG-14 - 5
- Engine Throttle ..... AG-14 - 5
- Engine ECU Functions and Features ..... AG-14 - 6

Power Requirements ..... AG-14 - 10
- Transient Voltage Protection ..... AG-14 - 10
- Reverse Current Protection ..... AG-14 - 10
- Starter Relay ..... AG-14 - 10

ECU Mounting Requirements ..... AG-14 - 11
- Welding Precautions ..... AG-14 - 11

Engine Harness Wiring ..... AG-14 - 12
- 12-Volt / 24-Volt Jumper Plug ..... AG-14 - 12
- RE162429 Instrument Panel Plug ..... AG-14 - 12
- Power and Ground Connections ..... AG-14 - 12

Onboard Diagnostic Gauge Requirement ..... AG-14 - 13

Instrumentation and Controls Wiring ..... AG-14 - 13
- Using the RE162429 Instrument Panel ..... AG-14 - 13

Continued - -

Katolight Service - Master Repair Manual - Page 2909

Electronic Engine Controls -- JDEC (8.1 L)

Contents / Notes

Page

Optional Features ..... AG-14 - 14
Analog Throttle Potentiometer ..... AG-14 - 14
Throttle Potentiometer Pre-adjustment Procedure ..... AG-14 - 15
Potentiometer Without Mechanical Adjustment Stops ..... AG-14 - 15
Analog Gauges for Voltage, Fuel flow, etc. ..... AG-14 - 15
Gauge Backlighting ..... AG-14 - 17
Intake Air Heater "WAIT" Lamp ..... AG-14 - 18
Intake Air Heater Control ..... AG-14 - 19
Torque Select - Wire #927B (Purple) ..... AG-14 - 19
Droop Select - Wire #925 (Dark Green) ..... AG-14 - 20
Tachometer Output - Wire #439 (White) ..... AG-14 - 20
Cruise Control ..... AG-14 - 20
Secondary Analog Throttle Potentiometer ..... AG-14 - 23
Auxiliary Fault Lamp ..... AG-14 - 23
External Derate / Shutdown Input ..... AG-14 - 24

Controller Area Network (CAN) ..... AG-14 - 25

Providing Your Own Instrument Panel ..... AG-14 - 25
Using the RE505259 Instrument Panel Harness and RE162450 Databus Module ..... AG-14 - 25

Making Your Own Instrumentation and Controls Wiring Harness ..... AG-14 - 34
Using the RE68155 Diagnostic Gauge With Your Own Design Wiring Harness ..... AG-14 - 36
Using Auxiliary Analog Gauges With Your Own Design Wiring Harness ..... AG-14 - 38

Making Your Own Engine / ECU Wiring Harness ..... AG-14 - 38

Reference Information ..... AG-14 - 39

Katolight Service - Master Repair Manual - Page 2910

INTRODUCTION

The John Deere Electronic Control system used on 8.1L engines has been modified to use the same RE162429 instrument panel with adjustable 2-state throttle used on the 10.5L and 12.5L engines.

The new JDEC system is similar to the old system, but with the following differences:

1. The new engine wiring harness includes alternator and starter relay wiring and a prewired connector to plug directly into the new RE162429 instrument panel for "plug-and-play" simplicity. If you choose to provide your own customer instrumentation and controls, the same plug can be used to provide a simple one-plug interface with your operator station. Some special features, such as cruise control, will require a few extra corrections.

2. The new system includes an optional push-button adjustable 2-state throttle feature that allows variable speed operation without a mechanical or potentiometer throttle. This feature is available only on ECUs that are not equipped with cruise-control.

3. The adjustable 2-state throttle feature can be used to easily preset maximum and minimum allowable operating speed when using a potentiometer throttle.

4. A new 2-inch digital diagnostic gauge, RE68155, displays diagnostic codes and warnings, engine hours, rpm, oil pressure, coolant temperature, system voltage, and many other engine parameters. It also includes "Warning" and "Stop Engine" lights. It is available by itself, or as part of the RE16429 instrument panel.

5. Additional gauge displays can be driven from the RE68155 diagnostic gauge to provide analog displays of rpm, oil pressure, coolant temperature, system voltage, % load, etc. An audible alarm is also available.

CONVERTING FROM THE OLD SYSTEM

If you are currently using the older version of the 8.1L JDEC control system, there are three different ways to adapt to the new system:

1. Using the RE162429 Plug-and-Play Instrument panel - -
   For simple power unit installations, the easiest and best way to apply the new system is to use the new RE162429 plug-and-play instrument panel. To use the new instrument panel, simply connect the wiring harness using the instructions provided with the engine, connect the system power and ground wires to the battery, plug in the RE162429 instrument panel, and turn the key.

2. Adapting Your Current Machine Wiring to the New RE505549 Engine Wiring Harness - -
   If you provide your own instrumentation and controls, the best way to simplify your installation is to adapt your machine wiring harness to interface with the new 21 pin instrument panel connector. This will provide a simple one-plug interface between your machine and the engine, and it will enable you to take advantage of some of the new features, such as the Adjustable 2-State Throttle. To adapt your custom instrumentation and controls wiring, refer to the section titled "Making Your Own Instrumentation and Controls Wiring Harness" at the end of this manual .

3. Continue to use the old RE500664 wiring harness - -
   The old RE500664 wiring harness does not provide some of the new features, such as the Adjustable 2-State Throttle, starter and alternator wiring, or one-plug instrumentation and controls connection. However, for customers who provide their own instrumentation and controls and prefer not to change their machine wiring harness right now, we will continue to offer the old RE500644 wiring harness for a limited time. The old wiring harness is not compatible with ECUs that have the Adjustable 2-State Throttle feature. Therefore, if you wish to continue using the old wiring harness you must specify an ECU with cruise-control, even if you don't use it. If you do not use cruise control, simply do not connect the cruise control wires, just like in the past. We strongly encourage you to adapt your machine wiring to the new RE505549 as quickly as possible.

Katolight Service - Master Repair Manual - Page 2911

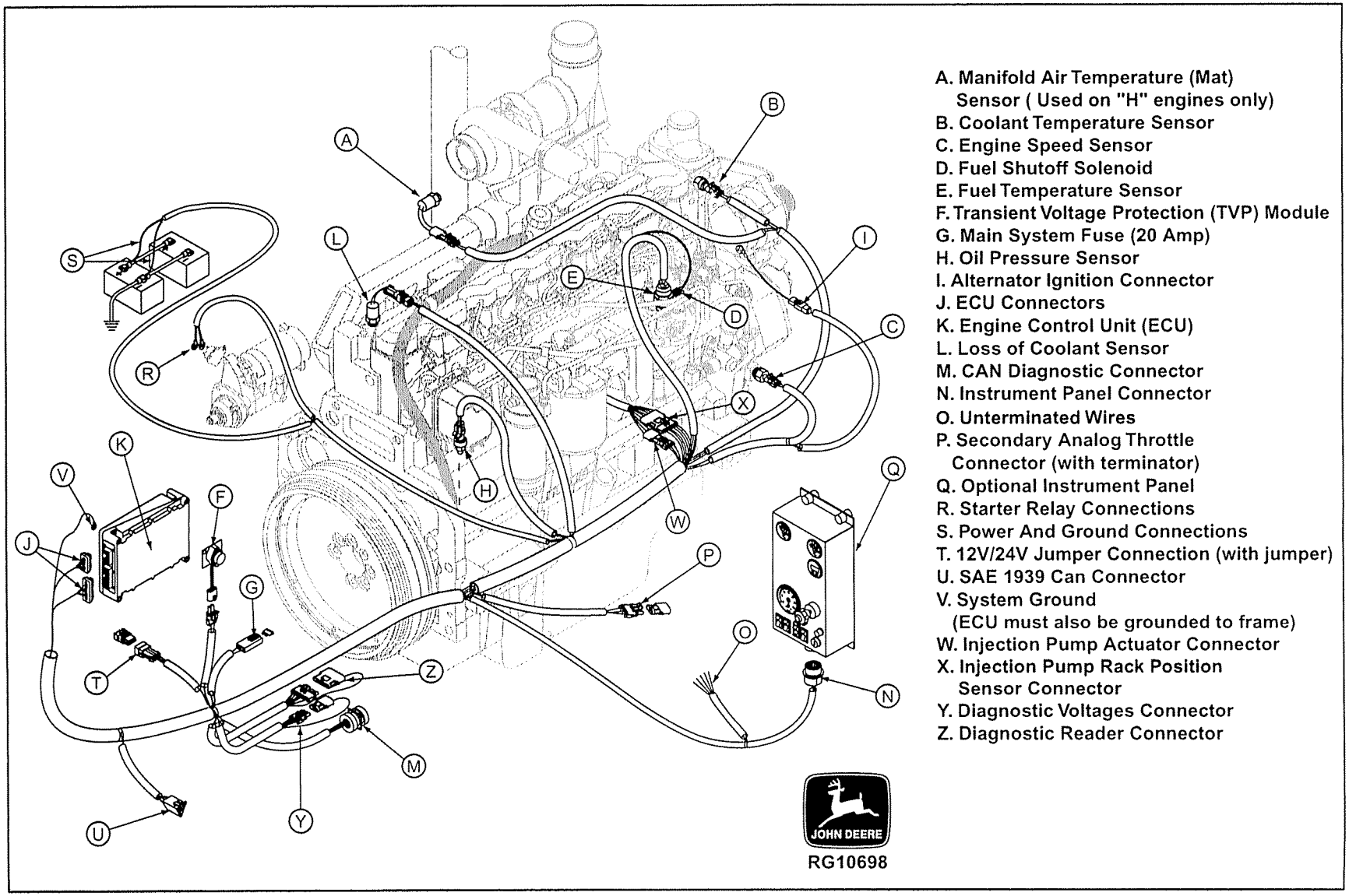

Figure AG-14 - 01, John Deere Electronic Control System

Katolight Service - Master Repair Manual - Page 2912

Katolight Service - Master Repair Manual - Page 2913

SOFTWARE

The ECU is equipped with a nonvolatile (permanent) memory with stored data that controls the engine's operation. Application features are programmed at the factory. Programmed features are documented on the 1600 Engine Option group, the engine performance curve and in these guidelines. The Engine Control Unit is programmed to limit the maximum fuel delivery as a function of engine speed. This allows the development of many torque curve shapes within the pump and engine's capabilities.

Optional torque and droop curves can be selected by the user through application wiring. The New John Deere ECU can have up to four programmed torque curves. The power levels for each curve are identified in the 1600 Engine Option group descriptions and on the engine performance curves. The highest Intermittent power level is programmed as torque curve 1. Optional power levels are programmed as torque curves 2 and 3. On "H" engines, torque curve 4 is the derate power for high air-to-air intake manifold temperatures. On "A" engines, torque curve 4 is just an optional torque curve.

For torque curve selection wiring details, see "Instrumentation and Controls Wiring" (Torque Select).

Governor Operation

The all speed governor can be set for either normal droop or isochronous operation. Normal droop, the default, gives a drop in engine speed with an increase in load or an increase in engine speed with a decrease in load. The normal % droop for your engine will be listed in the 1600 Engine Option group and on the engine performance curve. When isochronous governing is selected the droop is set to 0%, and there is no change in engine speed with changing loads until the engine's torque limit is reached.

For torque curve selection wiring details, see "Instrumentation and Controls Wiring" (Droop Select).

Engine Throttle

A new Adjustable 2-State throttle feature is being introduced on the 8.1L JDEC System. No mechanical or analog (potentiometer) throttle is required to operate the engine. The Adjustable 2-State throttle allows you to preset one high and one low operating speed, and switch between them electrically without the use of potentiometers or mechanical adjustments of any kind. This feature is available only on ECUs that are not equipped with cruise-control.

If an analog (foot or hand) throttle is desired, you can add up to two throttle potentiometers which would operate between the preset high and low operating speeds set.

Three switches make up the Adjustable 2-State Throttle, the High/Low Select switch, the Bump Enable switch, and the Speed Select switch.

1. **THE HIGH/LOW SELECT SWITCH**
   The High/Low Select switch allows you to choose between two operating speeds. Unless you adjust the speed points differently, the engine will operate at the factory pre-set fast idle speed when the High/Low Select switch is in the "Fast" position, and it will operate at the factory pre-set slow idle speed when the High/Low Select switch is in the "Slow" position. However, the preset "Fast" and "Slow" operating speeds may be reset to any desired speeds between factory fast and slow idles using the Speed Select and Bump Enable switches.

2. **THE BUMP ENABLE SWITCH**
   The Bump Enable switch serves as a lock for the Speed Select switch to make sure the operating speed is not changed accidentally or as a result of the Speed Select circuit failure. The Bump Enable switch must be "On" for the Speed Select switch to work.

3. **THE SPEED SELECT SWITCH**
   The Speed Select switch allows you to adjust either the "Fast" or Slow" preset speeds. When the High/Low Select switch is on "High", and the Bump Enable switch is "On", moving the Speed Select switch to the "-" (minus) position will decrease the pre-selected "Fast" speed slightly, and moving the Speed Select switch to the "+" (plus) position will increase the pre-selected "Fast" speed slightly (but not past fast idle). When the High/Low Select switch is on "Low", and the Bump Enable switch is "On", moving the Speed Select switch will adjust the "Slow" pre-set operating speed.

   Both preset speeds (high and low) will be remembered, even if the ignition is turned off. For example, if the engine is adjusted to 2000 rpm in the fast speed position, and the High/Low Select switch is left in the "Fast" position when the engine is shut off, the engine will return to 2000 rpm the next time the engine is started. If the ECU is ever completely disconnected from battery power, the maximum high and low speeds will return to the factory fast and slow idle speeds, and will have to be reset if desired.

Engine ECU Functions and Features

The John Deere Electronic Control Unit is available with these important features:

1. **SELF DIAGNOSTICS**
   The ECU will detect failures within the control system including sensors, actuators and the ECU itself. The ECU monitors the engine fuel, coolant, and oil pressure sensors for out-of-range values or erratic operation.

2. **CRUISE CONTROL**
   Engine ECU's are available with and without the Cruise Control function. The Cruise Control is an Off-Road type that maintains a constant engine RPM under varying load conditions. An automotive type cruise control maintains a constant road speed. This feature is available only on ECUs that are not equipped with the Adjustable 2-State Throttle.

The Cruise Cancel/Resume function is a one button Cancel then Resume function. The first time contact is made with Cruise Control active, the Cruise Control will disengage and the engine speed will drop to idle. If the contact is made again within one minute and with the engine speed above 1300 RPM, the Cruise Control will "Resume". This feature allows the placement of the Cancel/Resume button in a convenient location in the vehicle cab and does not require the use of the normal Cruise controls for momentary interruptions in cruise operation.

The Cancel/Resume function is intended for applications like Ag tractors and sprayers that turn around at the end of each row in a field. This allows the operator to use the throttle and/or brake to turn the vehicle around. When ready to resume field operations, the operator brings the engine speed above 1300 RPM and activates the Cancel/Resume function again to resume cruise speed. An internal timer gives the operator one minute to complete the turn around maneuver.

The Cruise Control has the normal functions of:

- Cruise Control power "ON" or "OFF"
- "Set" or "Bump Up" Engine Speed
- "Resume" or "Bump Down" Engine Speed
- Vehicle brake or clutch pedal to disengage Cruise Control

These feature generally function exactly like an automotive cruise control. Refer to the cruise control wiring instructions later in this section for more details.

On 12-volt ECU's, the engine speed can be set from two different locations. The primary location would normally be in the cab of the vehicle and is used to set a constant engine speed while the vehicle is being driven. The secondary cruise control is normally used in a location that provides for engine PTO speed control and is used with the engine in "neutral" or out of gear. Both locations can have the normal Cruise functions.

See the 1600 group descriptions and Engine Performance Curves to determine option codes with cruise control. See Application Feature Wiring for torque cruise control wiring details.

Katolight Service - Master Repair Manual - Page 2914

Katolight Service - Master Repair Manual - Page 2915

3. ENGINE DIAGNOSTICS

The ECU can detect abnormal engine operating conditions or faults in several engine systems. Faults are stored in the ECU for later use by service personnel, and may be reported to the operator with a Fault Lamp.

- **Low Oil Pressure Protection**
  There are two low oil protection features, Low Oil Pressure WARNING and Low Oil Pressure SHUTDOWN. The set-points for Low Oil Pressure WARNING and SHUTDOWN are variable based on engine speed, and are preset at the factory.

  At the Low Oil Pressure WARNING set-point the ECU turns on the blinking fault lamp. On systems with the protection option enabled a slow power derate begins. If the oil pressure goes above the Low Oil Pressure WARNING set point, power slowly increases until the power is back to full power. The fault lamp will continue to flash until the power returns to normal even if the fault condition has gone away and the recovery is in process.

  At Low Oil Pressure SHUTDOWN set-point the ECU turns on a solid (non-blinking) fault lamp. On systems with the protection option enabled a faster power derate begins. On systems with the shutdown option enabled, if the oil pressure does not go above the SHUTDOWN set-point within 30 seconds, the engine will shutdown. If oil pressure goes above Low Oil Pressure SHUTDOWN set point within 30 seconds, power derate reverts to the Low Oil Pressure WARNING curve.

- **Coolant Temperature Protection**
  There are three Coolant Temperature features, High Coolant Temperature WARNING , High Coolant Temperature SHUTDOWN, and Loss of Coolant SHUTDOWN.

  At the High Coolant Temperature WARNING set-point the ECU turns on the blinking fault lamp. On systems with the protection option enabled a slow power derate begins. If the coolant temperature goes below the High Coolant Temperature WARNING set point, power increases slowly until the power is back to full power. The fault lamp will continue to flash until the power returns to normal even if the fault condition has gone away and the recovery is in process.

  At High Coolant Temperature SHUTDOWN set-point the ECU turns on a solid (non-blinking) fault lamp. On systems with the protection option enabled a faster power derate begins. On systems with the shutdown option enabled, if the coolant temperature does not go below the SHUTDOWN set-point within 30 seconds, the engine will shutdown. If coolant temperature goes below High Coolant Temperature SHUTDOWN set point within 30 seconds, power derate reverts to the High Coolant Temperature WARNING curve.

  If a Loss of Coolant fault is detected the ECU turns on a solid (non-blinking) fault lamp. On systems with the protection option enabled a rapid power derate begins. On systems with the shutdown option enabled, if the Loss of Coolant switch does not reset within 30 seconds, the engine will shutdown. If the Loss of Coolant switch resets within 30 seconds, power increases at the same rate until back to full power.

- **High Charge Air Temperature (on "H" engines only)**
  A high charge air temperature switch is required on air-to-air aftercooled engines. If the air temperature in the intake manifold rises above the maximum allowable temperature, the High Charge Air Temperature switch connects the "Torque Curve Select" input to ground and a derate power curve is selected. The ECU turns on a blinking fault lamp. There is no additional derate, nor is there a shutdown function for High Charge Air Temperature. If charge air temperature returns to an acceptable temperature, normal power is immediately available.

  Some intake manifold options have a 1/2"-14 NPSI straight pipe thread port available for installing the High Charge Air Temperature switch. If you select a manifold without a port, you must provide a 1/2"-14 NPSI straight pipe thread port in the aftercooler outlet tube for the high charge air temperature switch. The switch is should be ordered with the wiring harness. It must be located in the tube between the aftercooler and intake manifold, not between the turbo and aftercooler.

Katolight Service - Master Repair Manual - Page 2916

4. ENGINE PROTECTION

The ECU can detect several types of engine problems and may take actions to minimize engine damage that may result if these problems are not corrected. There are two levels of engine problems, "Warning" and "Shutdown".

"Warning" faults are engine problems that may lead to engine failures if not corrected. "Warning" faults include higher than normal fuel temperature, lower than normal oil pressure, higher than normal coolant temperatures, higher than normal charge air temperatures, or power derates. The fault lamp will be flashing or blinking when a "Warning" problem is detected.

"Shutdown" faults are engine problems that indicate imminent engine failure. "Shutdown" problems include extremely low oil pressure, extremely high coolant temperatures, and loss of coolant. "Shutdown" problems are indicated by a continuously "ON" fault lamp.

See the 1600 group descriptions and Engine Performance Curves to determine which injection pump/ECU options include engine protection or shutdown features. See Application Feature Wiring (External Shutdown) for details on how the OEM can use these features with an external signal such as a loss of prime switch.

- **No Protection**

  Engine ECU's with "No Protection" do not derate the engine when coolant temperature, oil pressure, or charge-air temperature "Warning" faults are detected and do not shutdown the engine when there is a "Shutdown" fault. The fault lamp will blink or flash when a "Warning" fault is detected by the ECU and will be continuously "ON" when a "Shutdown" fault is detected. The engine operator is responsible for reducing engine speed and power when a "Warning" fault exists and for shutting down the engine when a "Shutdown" fault exists.

  The fuel temperature derate schedule is still active, even in "No Protection" ECUs

  If engine coolant temperature and oil pressure sensors are not installed on engines with "No Protection" ECUs, no fault will be detected and the fault light will not light.

  "No Protection" ECU's can not warn of a broken or disconnected wire in the coolant temp and oil pressure sensor circuit.

  Excessive fuel temperature or a broken or disconnected fuel temperature sensor will generate a fault code, derate the engine, and activate the fault light, even in "No Protection" ECUs.

- **Engine Protection without Shutdown**

  The Engine Protection feature is only in ECU's with Engine Protection programmed into the ECU. All engine protection sensors including coolant temperature and oil pressure must be installed if engine protection is specified. Otherwise, a fault will be detected, and the fault lamp will light.

  The engine derate schedules will be active but the engine will not shutdown if a "Shutdown" fault is detected. The fault lamp will blink or flash when a "Warning" fault is detected by the ECU or when the engine is derated by the ECU. The fault lamp will be continuously "ON" when a "Shutdown" fault is detected. The engine operator is responsible for shutting down an engine with a "Shutdown" fault.

- **Engine Protection with Shutdown**

  The Engine Shutdown feature is only in ECU's with Engine Protection and Shutdown programmed into the ECU. All engine protection sensors including coolant temperature and oil pressure must be installed if engine protection is specified. Otherwise, a fault will be detected, and the fault lamp will light.

  The engine derate schedules will be active and the engine will shutdown in 30 seconds if a "Shutdown" fault is detected. The fault lamp will blink or flash when a "Warning" fault is detected by the ECU or when the engine is derated by the ECU. The fault lamp will be continuously "ON" for 30 seconds before shutting down when a "Shutdown" fault is detected. On mobile applications the operator may delay a shutdown for 30 seconds by pushing a "Shutdown Override" button.

On an ECU with the Shutdown feature, shutting down the engine and turning "off" the key switch will reset the engine Shutdown feature and will allow at least 30 seconds of running after restart. After 30 seconds, the engine will again shutdown unless the "Shutdown" fault condition has cleared

The "Shutdown Override" switch resets the shutdown timer to 30 seconds, and may be used repeatedly. However, continuously holding down the "Shutdown Override" switch will not reset the 30 second timer.

The High Charge Air Temperature switch works independent of the "Shutdown" and "Warning" functions. Excessively high charge air temperatures will put engines with Engine Protection enabled into a power derate mode and a "Warning" fault will be set. The fault lamp will flash or blink to indicate that a power derate has taken place. The fault lamp will continue to blink until the High Charge Air Temperature switch has reset to the normal position and the engine power derate has been ramped back up to full power.

5. **SERVICE DIAGNOSTICS**
Fault codes generated by the ECU are stored for later retrieval through the serial interface or the Deere Diagnostic Tool link. The controller will also send a signal to a fault lamp.

6. **EXTERNAL DERATE AND SHUTDOWN INPUT**
The loss-of-coolant circuit can also be used to trigger a derate and shutdown from an external source such as high hydraulic temperature or loss of prime. Since the loss-of-coolant circuit is used, it will act exactly like a loss of coolant fault, depending on what protection level has been specified (see description, above), and it will generate the same fault code.

The engine will continue to run for 30 second after the external derate/ shutdown is triggered. If an immediate shutdown is required, a separate magnetic shutdown switch should be added to Wire #002C in the engine wiring harness to break the connection to the battery.

7. **EXTERNAL FAULT LAMP DRIVER**
A driver for an external fault lamp is also provided. It will blink for warnings and come on continuously for shutdown faults.

8. **STARTING CONTROL**
The John Deere Electronic Control system can be used to automatically turn on an electric intake heater. The ECU can turn on the intake heater whenever the ignition switch is in the "Run" position and the temperature is low enough to require intake heat. It will stay on until shortly after the engine starts. The ECU can also operate a "Wait" light. The wait light comes on at the same time as the intake heater, and stays on until the intake heater has had enough time to heat the intake air adequately to begin cranking.

See Application Feature Wiring (Starting and Intake Heater Controls) for wiring details.

9. **FUEL TEMPERATURE COMPENSATION**
A conventional diesel engine loses power as the fuel temperature increases because the injection pump delivers less fuel. The John Deere Electronic Control System monitors fuel temperature and varies the pump displacement as needed to provide constant power from 104 to 158 degrees F (40-70 C).

At fuel temperatures above 158 degrees F (70 C), an "Excessive Fuel Temperature" fault code will be displayed on the on-board or service diagnostic reader, and power will decrease slowly to a preset default level.

Katolight Service - Master Repair Manual - Page 2917

POWER REQUIREMENTS

12-volt or 24-volt operation must be specified when ordering the engine. The engine ECU has the following voltage requirements:

12 Volts DC	24 Volts DC	Description
0 to 5.3 Volts	0 to 10.6 Volts	System does not operate - No ECU damage
5.3 to 9.0 Volts	10.6 to 18.0 Volts	Cranking Voltage Range - Some features "inactive"
9.0 to 16.0 Volts	18.0 to 32.0 Volts	Normal Operation - All features "active"
16.0 to 26.5 Volts	32.0 to 36.0 Volts	Over-voltage, ECU can operate for up to 5 minutes without damage - Some features "inactive"
>26.5 Volts	>36.0 Volts	ECU damage

Table AG-14 - 01, ECU Power (voltage) Requirements

Transient Voltage Protection

There are two different Transient Voltage Protection (TVP) modules; 12 Volt and 24 Volt. The 12 Volt TVP module protects the engine ECU from transient voltage spikes (such as alternator load dump) greater than 26 volts. The 24 Volt TVP module protects against voltage spikes greater than 36 volts. The TVP module can be wrapped in the wiring harness or mounted in the vehicle. If the TVP module is mounted in the vehicle, it should be mounted vertically with the pigtail wires exiting form the bottom of the module. The mounting location should be away from battery fumes, engine heat and vibration, such as in a control cabinet, vehicle chassis, or cab. Mounting ears of the TVP module may not withstand over tightening of mounting bolts. The TVP module does not protect against sustained overvoltage to the ECU.

The TVP Module mates with the TVP Connector in the engine wiring harness. The TVP module is not always required. Some alternators have internal TVP protection. A TVP module will be provided if needed, depending on the alternator option specified. If you provide your own alternator, a TVP module must be used.

Reverse Current Protection

The ECU has limited internal reverse current protection if the ECU power supply is connected in reverse. The ECU will not be damaged with reverse voltage up to 26.5 Volts on a 12 Volt system and 36.0 Volts on a 24 Volt system. Reverse current at higher voltages will damage the ECU. A fuse in the wiring harness protects against over current.

Starter Relay

The standard Engine wiring harness and optional instrument panel is designed for use with a starter relay located on a bracket within 2 feet (600 mm) of the starter. Factory starter options with relay will be available. If a factory relay option is not specified, you should provide your own relay mounted very near the starter. Under no circumstances should the starter solenoid be operated directly from the key switch without a relay.

Katolight Service - Master Repair Manual - Page 2918

Katolight Service - Master Repair Manual - Page 2919

ECU MOUNTING REQUIREMENTS

The ECU is enclosed in a "wedge box" style enclosure. It is designed for off-engine mounting only. The ECU connector is a "Metri-Pack" connector. The wiring harness is mated to the ECU connector with a jack screw. The recommended torque on the jack screw is 0.8 to 1.5 Nm.

The ECU should be mounted securely with the four corner mounting holes in a vertical plane with the mating connectors pointing downward. This orientation provides maximum moisture resistance. Other acceptable mounting orientations are shown below. The wiring harness must be routed downward from the ECU enclosure so that moisture cannot drain into the connector. A "drip loop" is required when the harness is to be routed above the ECU enclosure.

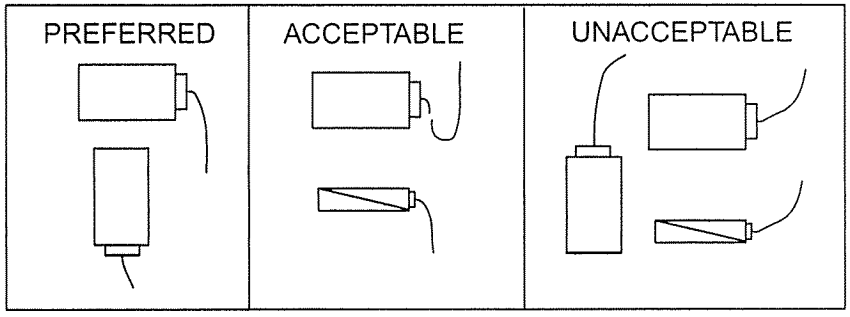

Figure AG-14 - 02, ECU Mounting Requirements

The application wiring harness should be routed to provide access to the diagnostic connectors for service diagnostic work.

The ECU must be in a location with a temperature range of -40°F / -40°C (minimum) to 169°F / 76°C (maximum).

The ECU is not intended to be mounted in a location that is subject to severe vibration or high shock loading.

The ECU case must be grounded to the chassis to protect against electrostatic discharge. The strap can be as small as 12 gage (primarily for mechanical strength reasons). This is in addition to the small ground connection in the factory wiring harness that grounds the ECU case to the wiring harness.

Never cut or splice into the ECU wiring harnesses. Do not wire any other loads into the ECU wiring harnesses, except for unterminated wires.

All wiring must be installed and routed to avoid sharp bends, kinking, pinching, cutting, rubbing or excessive pulling. Use cable clamps or wire ties as needed. Do not over tighten wire ties. Do not run screws through the wiring harnesses. Protective shields may be needed to protect the harnesses from road hazards, sharp surfaces, corrosive materials or excessive heat.

Welding Precautions

Welding causes high currents or electrostatic discharge in electronic components that can cause permanent damage to the ECU. We recommend that "No Welding" signs be prominently displayed on the vehicle chassis. The following steps should be used to protect from damage when welding on the vehicle chassis:

1. Remove the ground connection from the ECU to the vehicle frame.
2. Disconnect the connectors from the ECU.
3. Connect the welder ground close to the welding point and be sure ECU or other electronic components are not in the ground path.

Katolight Service - Master Repair Manual - Page 2920

ENGINE HARNESS WIRING

The engine comes with a package of components to be installed by the distributor or OEM that includes engine sensors, ECU, Transient Voltage Protection module (if needed) and engine wiring harness. The engine harness includes starter and alternator connections. It is also possible to order the engine without sensors or wiring harness, if the OEM prefers to order those parts separately. Only the specified John Deere sensors can be used. Other sensors should not be applied.

The engine harness has two ECU connectors, four connectors installed on the fuel injection pump, connectors for the RE162429 instrument panel, auxiliary speed sensor, engine coolant sensor, high engine coolant switch, TVP Module, 20 amp fuse, 9 pin Deutsch CAN plug, 6 pin diagnostic reader connection, and 4 pin diagnostic voltage connection. Unterminated wires for customer interface are also in the wiring harness.

The two capped diagnostic connectors are for troubleshooting and system checkout service procedures only. Keep protected with caps when not in use. Water or dirt in these connectors may cause erratic engine operation. One of these plugs mates with Electronic Governor Tester. See Component Technical Manual for instructions on using the Tester.

The Engine wiring harness should be connected per the factory instructions packaged with the engine. The starter relay may be available on the engine or can be provided by the user, but it must be installed near the starter so the wiring harness will reach it. Special wiring for optional features such as cruise control or auxiliary throttles will be described in the "Optional Features" section that follows later in this manual.

12-Volt / 24-Volt Jumper Plug

The same wiring harness is used for either 12-volt or 24-volt systems. However, internal ECU wiring is actually slightly different. For 12-volt systems, Wire #432 is attached to the "Start" terminal of the key switch (Wire #422), but for 24-volt systems, Wire #442 is attached to the "Start" terminal of your key switch. This is accomplished by inserting one of two jumpers provided with the engine in a special connector in the wiring harness.

For 12-volt systems . . .
Jumper #RE505597 connects Wire #432 to Wire #422.
For 24-volt systems . . .
Jumper #RE505598 connects Wire #442 to Wire #422.

The RE505597 12-volt jumper will be installed in the engine wiring harness at the factory. For 24-volt applications, it should be removed and replaced with RE505598.

RE162429 Instrument Panel Plug

A 21-pin Deutsch connector provided on the engine wiring harness plugs directly into the bottom of the new RE162429 Instrument panel. To operate a new electronic 8.1L engine with the RE162429 instrument panel, you need only install the engine wiring harness, connect the power and ground to the battery, plug the 21-pin Deutsch connector into the RE162429 Instrument Panel, and turn the key. The RE162429 panel operates on 12 or 24 Volts.

Power and Ground Connections

After all other wiring is completed, and immediately before operating the system for the first time, the main power and ground connections to the battery should be made. Unterminated system power and ground wires are provided in the engine wiring harness for this purpose. These wires should be connected directly to the battery if possible. The battery can be located up to 10 feet (3 M) from the engine. Connect as follows:

Battery Power- (Wire #002C, red, 10 Gauge)
Should be connected directly to the positive terminal of the battery.

Ground Wire- (Wire #050H, black, 10 gauge)
Should be connected directly to the negative terminal of the battery.

The ECU case must also be grounded to the chassis separately to protect against electrostatic discharge. The strap can be as small as 12 gage (primarily for mechanical strength reasons). This is in addition to the ECU ground connection wire on the engine wiring harness.

ONBOARD DIAGNOSTIC GAUGE REQUIREMENT

All applications using a 8.1L engine with JDEC control system must be equipped with a permanent onboard diagnostic gauge. The new RE68155 Diagnostic Gauge is available either separately or as part of the RE162429 instrument panel for this purpose.

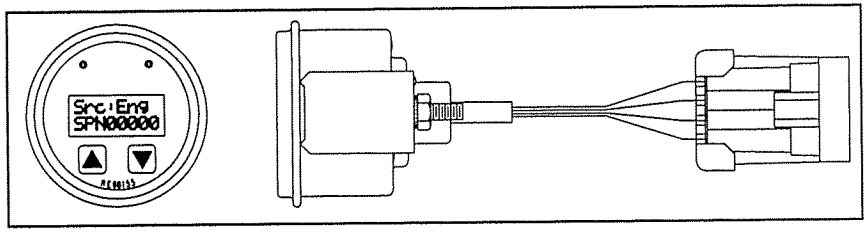

Figure AG-14 - 03, RE68155 Diagnostic Gauge

The RE68155 diagnostic gauge works with the 8.1L JDEC control system. It has a "Warning" light, "Stop Engine" light, and a digital display that shows diagnostic codes when the ECU detects a fault. It digitally displays hours, rpm, oil pressure, coolant temperature, and many other parameters. It can also be used to drive analog displays of rpm, oil pressure, coolant temperature, and many other parameters available on the digital display. It fits in a standard 2 inch SAE instrument panel opening.

If you don't wish to use the RE68155 Diagnostic gauge, you must provide your own on-board diagnostic system using the information provided over the SAE J1939 Controller Area Network (CAN) described later in this manual.

INSTRUMENTATION AND CONTROLS WIRING

To complete a runable engine, instrumentation and operator controls must be added. At minimum, a control wiring harness, ignition switch, diagnostic gauge, and a set of 2-state throttle actuating switches and/or an analog throttle must be provided. Many other optional controls and displays can also be added if desired. See the "Optional Features" section that follows later in this manual.

There are three ways to add basic instrumentation and operator controls to the system:

1. Use the John Deere RE162429 instrument panel.
2. Adapt the instrumentation and wiring harness used in the John Deere RE162429 instrument panel to your own panel and controls.
3. Provide your own instrument panel wiring harness and controls.

The easiest way to provide all the control system parts that do not come on the engine is to use the John Deere RE162429 instrument panel.

Using the RE162429 Instrument Panel

The 21-pin Deutsch connector on the engine wiring harness plugs directly into the bottom of the RE162429 Instrument panel. To operate an 8.1L engine with the RE162429 instrument panel, you need only install the engine wiring harness, connect the power and ground to the battery, plug the 21-pin Deutsch connector into the RE162429 Instrument Panel, and turn the key. The RE162429 panel operates on 12 or 24 volts.

The RE162429 panel includes the following standard features:

- Ignition switch
- Panel mounted fuse
- Adjustable 2-state throttle switches
- Shutdown override button
- RE68155 Diagnostic Gauge
- Tachometer
- Oil pressure analog gauge
- Coolant temperature analog gauge.
- Cutouts for 3 additional gauges

Katolight Service - Master Repair Manual - Page 2921

Optional Features

Wiring connectors for some optional or operator selectable features are provided within the RE162429 instrument panel. Connectors for some other optional features are provided in the engine wiring harness.

The RE162429 panel is prewired for the following optional or user-selectable features:

- Analog throttle potentiometer
- Analog gauges for voltage, % load, etc.
- Audible Warning Alarm Module
- Gauge backlighting (12 Volt standard, 24 Volt optional)
- Backlight dimmer (brightness adjustment)
- Intake air heater "WAIT" lamp

The engine wiring harness is prewired for the following optional features:

- Intake air heater control
- Selectable torque curves
- Selectable droop or isochronus governor regulation
- Auxiliary tachometer output
- Cruise Control
- Secondary analog throttle potentiometer
- Auxiliary fault lamp
- User selectable external derate/shutdown input

Optional features are wired as follows:

- **ANALOG THROTTLE POTENTIOMETER**
  A throttle potentiometer can be installed if desired. The throttle potentiometer can be used to adjust operating speed between the maximum and minimum speeds preset with the Adjustable 2-state Throttle. The Adjustable 2-State throttle must be set in the "Low Speed" position for the Analog throttle to work.

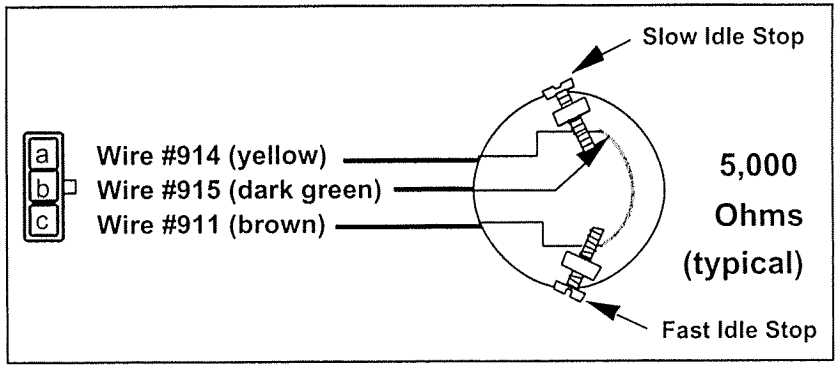

Figure AG-14 - 04, Analog Throttle Potentiometer

The RE162429 Instrument Panel is prewired to accept a RE69667 potentiometer throttle with 3-way female Weather-Pack connector. A cutout is provided in the panel to mount the RE69667 throttle. In the instrument panel, a special RE503681 throttle emulator was plugged into the analog throttle connector at the factory so the system can operate without a throttle potentiometer. To install the RE69677 or similar throttle, unplug the RE503681 throttle emulator, and plug the throttle into the same connector. Either the RE503681 throttle emulator or the potentiometer throttle must be plugged in for the system to operate properly. Do not leave the analog throttle connector in the instrument panel open.

Other throttle potentiometers including foot throttles that fit this plug may be available from Morse or other controls manufacturers. It is best to keep overall system resistance at about 5000 Ohms, but overall resistance from 2000 to 15000 Ohms should work. Wiper to low end resistance should be 0 Ohm minimum, 1250 Ohm maximum.

Note: If the voltage on Wire #915 goes above 4.75 volts or below 0.25 volts, the ECU will generate a fault code and return the engine to slow idle. It does this so that a break in Wire #914 does not cause the engine to go to fast idle unexpectedly.

Katolight Service - Master Repair Manual - Page 2922

To prevent error codes and unexpected changes in speed, the fast and slow idle stops on the throttle potentiometer must be adjusted so that the voltage on Wire #915 can't go below 0.25 volt or above 4.75 volts.

Once the stops are adjusted to limit low and fast idle voltage, the "Auto-Cal" feature of the ECU will check the exact range of your throttle potentiometer and adjust the ECU to that range. However, your initial installation must be within certain resistance limits for the Auto-Cal feature to work.

- **THROTTLE POTENTIOMETER PRE-ADJUSTMENT PROCEDURE**
  Before plugging it into the wiring harness, adjust the throttle potentiometer using the following procedure:

  1. With the potentiometer against the slow idle stop, adjust the stop so that the resistance measured between the ground and wiper connections of the potentiometer (Wire #914 and #915) is between 6% and 12% of overall potentiometer resistance (300 to 600 Ohms for a 5,000 Ohm potentiometer like RE69667).

  2. With the potentiometer against the fast idle stop, adjust the stop so that the resistance measured between the power and wiper connections of the potentiometer (Wire #911 and #915) is also between 6% and 12% of overall potentiometer resistance (300 to 600 Ohms for a 5,000 Ohm potentiometer like RE69667).

  This does not have to be a precise adjustment. The Auto-Cal feature will make a precise adjustment automatically. Once it has been done a few times, you will probably find that adjusting each throttle stop screw a predetermined number of turns is accurate enough.

- **POTENTIOMETER WITHOUT MECHANICAL ADJUSTMENT STOPS**
  If a potentiometer without fast and slow idle stops is used, additional fixed resistors can be wired in series with Wire #914 and Wire #911 as shown below to prevent the analog throttle voltage from going outside the upper and lower limits and generating a fault code.

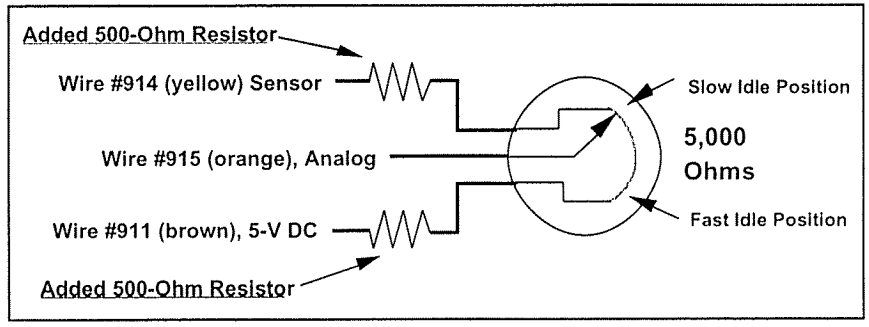

Figure AG-14 - 05,
Potentiometer Without Mechanical Adjustment Stops

For automatic adjustment of factory preset fast idle and slow idle settings by the Auto-Cal system, each added resistor should be between 10-15% of the nominal throttle potentiometer resistance. A 5,000 Ohm throttle potentiometer is shown with two 500 Ohm resistors, but resistors up to 750 Ohms could have been used with this potentiometer. Total resistance of the potentiometer and both resistors should be in the range of 2000 to 15,000 Ohms.

- **ANALOG GAUGES FOR VOLTAGE, FUEL FLOW, ETC.**
  The RE162429 instrument panel comes with an analog tachometer, oil pressure gauge, and coolant temperature gauge. The instrument panel also includes panel cutouts and wiring for up to three additional analog gauges.

  Optional JDEC analog gauges are available for system voltage and % load. An audible alarm module is also available. Additional gauges may be made available in the future.

Katolight Service - Master Repair Manual - Page 2923

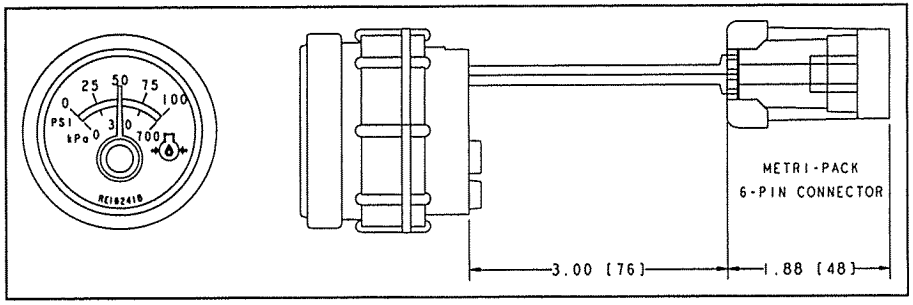

Figure AG-14 - 06, Typical Auxiliary Analog Gauge

Inside the RE162429 instrument panel is a special RE162450 Databus module with 13 Metri-Pack and Deutsch connectors. The six 6-way female Metri-Pack connectors shown below are for auxiliary analog gauges.

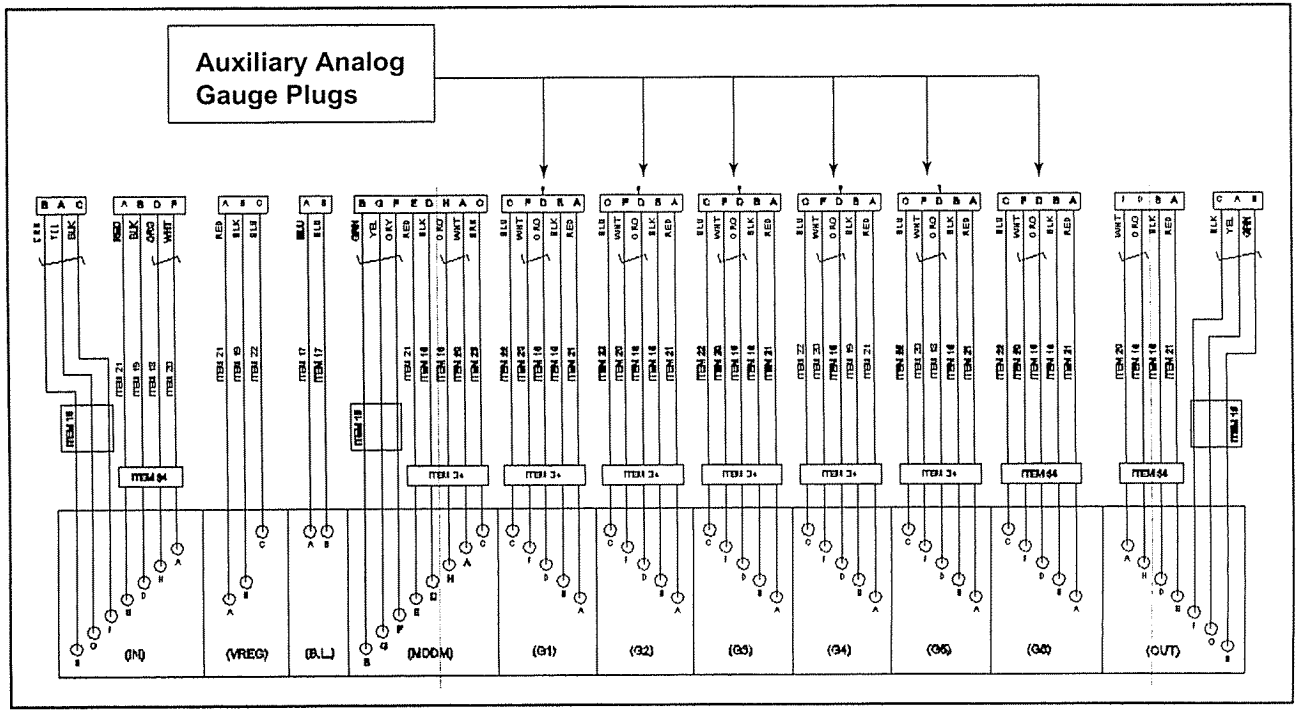

Figure AG-14 - 07, Auxiliary Analog Gauge Plugs

Katolight Service - Master Repair Manual - Page 2924

Any JDEC Auxiliary Analog Gauge or the alarm module can be plugged into any of the 6 gauge connectors in the Databus module. The optional analog gauges operate by reading a proprietary signal from the JDEC Diagnostic gauge. The gauge will know what part of the signal to use, regardless of which gauge terminal it's plugged in to. Only gauges specifically designed for this system will work. Do not attempt to plug any other gauges into the Databus module.

The tachometer fits into a standard SAE 3-inch tach cutout. All other gauges and the audible alarm module fit into a standard SAE 2 inch gauge cutout.

The audible alarm module is also prewired for a single-pole, double (normally open / normally closed) throw relay output. The relay output can drive 0.5 Amps at 125 VAC max, 1 Amp at 24 VDC max, or 62.5 VA, 30 Watts max. This was designed to typically drive a control relay that controls a larger load.

- **GAUGE BACKLIGHTING**
  User selectable 12-volt backlighting for all gauges is prewired in the RE162429 instrument panel. A separate 24-/12-volt power regulator must be purchased to operate the backlighting in a 24-volt system.

  The following two connectors, located inside the RE162429 Instrument Panel on the Databus module, must be properly connected to turn the backlighting function on:

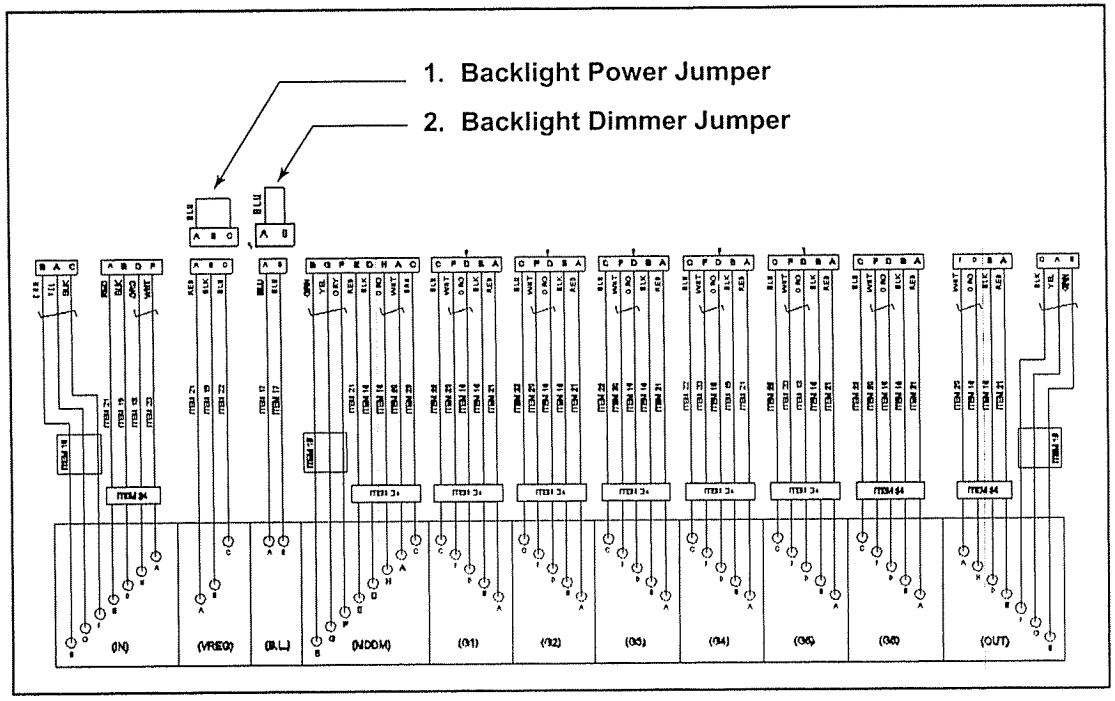

Figure AG-14 - 08, Backlight Connectors

Katolight Service - Master Repair Manual - Page 2925

1. **Backlight Power Connector (3-pin female Metri-Pack)**

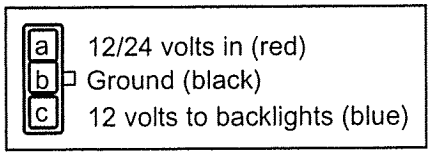

Figure AG-14 - 09, Backlight Power Connector

For 12-volt operation, Pin A must be connected to Pin C . This provides 12-volt power directly to the backlight circuit. A special connector with jumper wire is provided with the RE162429 panel for this purpose. Just plug it into the connector.

For 24-volt operation, an RE162448 24-volt-to-12-volt converter must be plugged into the 3-pin connector, to reduce 24-volt battery power to 12 volts.

Note: Do not connect Pin A directly to Pin C for 24-volt operation. This will provide 24 volts to the 12-volt instrumentation backlights, and failures of the diagnostic gauge, tachometer, and all other auxiliary gauges will occur. Always order and install the RE162448 24-volt-to-12-volt converter for 24-volt backlighting. The gauges will operate on either 12 or 24 volt. RE162448 is only required if backlighting is used.

2. **Backlight Dimmer Connector (2-pin female Metri-Pack)**

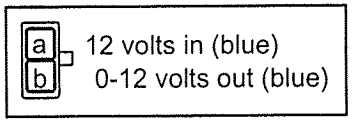

Figure AG-14 - 10, Backlight Dimmer Connector

Wiring of the dimmer connector is the same for 12-volt or 24-volt operation. For no backlighting, do not connect anything to this connector. For backlighting to be on full all the time, pin A must be connected to pin B. A male connector with jumper wire is provided with the RE162429 panel for this purpose. Just plug it into the female connector. To turn backlighting on and off, a simple on-off toggle switch can be added to the wire between pin A and pin B.

For variable brightness backlighting, order and install an RE162449 dimmer assembly. It plugs right into the dimmer connection and fits into a .453" (11.5 mm) hole in the panel. A 3500-Ohm variable resistor could also be used between pin A and pin B to adjust backlight intensity. However, adjustment precision and dead-band will vary depending on the number of gauges used.

- **INTAKE AIR HEATER "WAIT" LAMP**

The John Deere Electronic Control system can be used to automatically turn on the electric intake air heater starting aid on 8.1L engines. A "WAIT" lamp can be added to the instrument panel, which comes on when the ignition key is switched to the "Run" position and the temperature is low enough to require intake heat. It will stay on until the intake heater has had enough time to heat the intake air adequately for starting. The operator can then turn the key the rest of the way to the "Start" position.

The "WAIT" lamp is a customer installed option. A plugged mounting hole and wiring connections are provided in the instrument panel for an RE67334 wait lamp assembly. The RE67334 "WAIT" lamp assembly connects with two 0.187" insulated female, solderless terminals in the panel wiring harness.

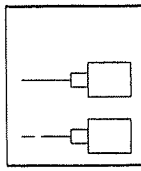

Circuit	Color	Size	Destination
012	Red	18 AWG	to fuse holder
474	Red	18 AWG	to pin A on Deutsch connector

Figure AG-14 - 11, "WAIT" Lamp Assembly Connectors

To use the 12-volt "WAIT" lamp feature, order and install one RE67334 "WAIT" lamp assembly. For 24-volt operation, remove the 12-volt light bulb from the RE67334 assembly, and replace with a R132093, 24-volt bulb.

Katolight Service - Master Repair Manual - Page 2926

Katolight Service - Master Repair Manual - Page 2927

- **INTAKE AIR HEATER CONTROL**
  Unterminated Wire #429 is used to operate a relay that turns the intake air heater starting aid on and off. It functions as a normally open switch. It closes to ground to operate the relay. The intake heater will be turned on whenever the ignition switch is in the "Run" position and the temperature is low enough to require intake heat. It will stay on until shortly after the engine starts. The load side of the relay that is attached to the heater must be rated for at least 260 amps continuous, and the switch side of the relay that is attached to Wire #429 must not draw more than 500 mA. We don't know of any commercially available relays that will carry 260 amps on the load side with 500 mA or less on the switch side. Therefore, a two-stage relay installation such as shown below is normally required.

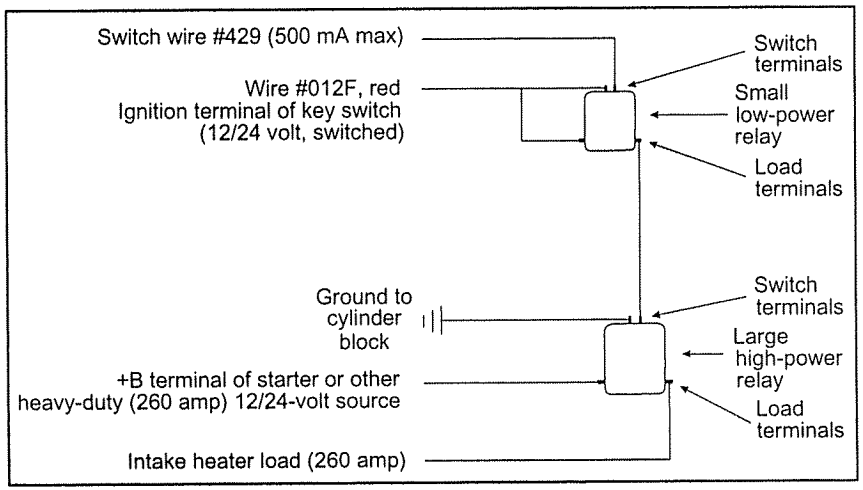

Figure AG-14 - 12, Two-stage Relay Installation

- **TORQUE SELECT - Wire #927B (Purple)**
  Wire #927B in the unterminated wire bundle on the engine wiring harness is the Torque Select wire. The Torque Select Input must be wired as described below to obtain the desired torque curve.

Torque Curve 1: Fuel Limit Select Input (Wire #927B) is an open circuit.

Torque Curve 2: Fuel Limit Select Input (Wire #927B) is connected to Sensor ground (Wire #914C) through a 2000-ohm ±10% resistor (at least 1/2-watt rating).

Torque Curve 3: Fuel Limit Select Input (Wire #927B) is connected to Sensor ground (Wire #914C) through a 375-ohm ±10% resistor (at least 1/2-watt rating).

Torque Curve 4: Fuel Limit Select Input (Wire #927B) is shorted to Sensor ground (Wire #914C).

Wire #14C (sensor ground) can also be found in the unterminated wire bundle in the engine wiring harness.

The 1600 engine option group and the engine performance curve lists the torque curves available for a specific engine application. Torque Curve 4 is used for the High Air Temperature derate on "H" engine models.

If only one torque curve is desired, no switch is required. If more than one torque curve are desired, multiple torque curves can be obtained by using a simple switching arrangement.

A simple on/off toggle switch and resistor as shown below can be used to switch between torque curve 1 (max intermittent or standby power), and any one of the other curves. When the switch is open, the ECU will call for torque curve 1, when the switch is closed, the ECU will call for one of the other curves depending on the resistance in the line. The switch could be operated manually, or it could be operated by some other machine system, such as a hydraulic pressure switch or a switch on the transmission control.

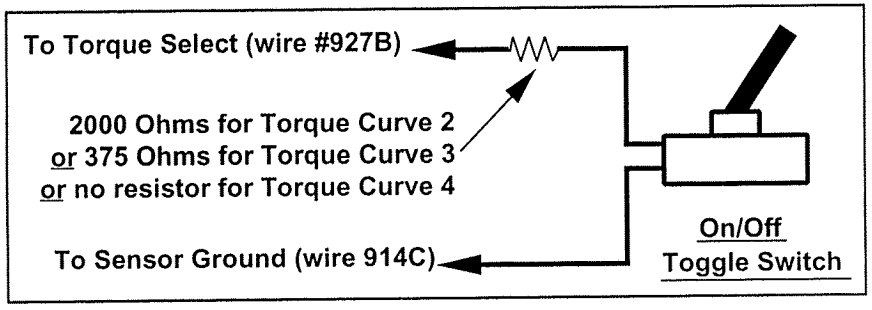

Figure AG-14 - 13, Torque Curve Select Switch

Multiple switches could be used to provide any of the four torque curves under different operating conditions.
You could operate with torque curve 1 for normal operation, torque curve 2 for transport, torque curve 3 for unloading, etc.

- **DROOP SELECT - Wire #925 (Dark Green)**
  Wire #925 in the unterminated wire bundle on the engine wiring harness is the Droop Select wire. The All Speed governor and high idle speed can be switched between droop mode and isochronous governing at any time. The factory low idle speed is always set for isochronous governing.
  The Droop Select input must be wired as follows to obtain the desired droop:

  Normal Droop: Wire #925 is open Circuit.

  Isochronous: Wire #925 is shorted to Sensor Ground (Wire #914C in the unterminated wire bundle).

  If only normal droop is desired, do not connect Wire #925.

  The 1600 engine option group defines the normal droop specification for a specific application.

- **TACHOMETER OUTPUT - Wire #439 (White)**
  Wire #439 in the unterminated wire bundle on the engine wiring harness is provided to drive a user supplied tachometer. It can be used if the OEM prefers a tachometer other than the RE162419 auxiliary analog tachometer used with the RE162429 instrument panel.

  The ECU provides a buffered output of the magnetic speed sensor signal through Wire #439. This signal can be monitored by a customer supplied tachometer, or several other systems in the installation without degrading the signal. The ECU outputs 27 pulses per engine revolution to the Tachometer output.

- **CRUISE CONTROL**
  The cruise-control feature is intended for use on mobile applications. Refer to the following diagram when wiring the Cruise Control feature.

Katolight Service - Master Repair Manual - Page 2928

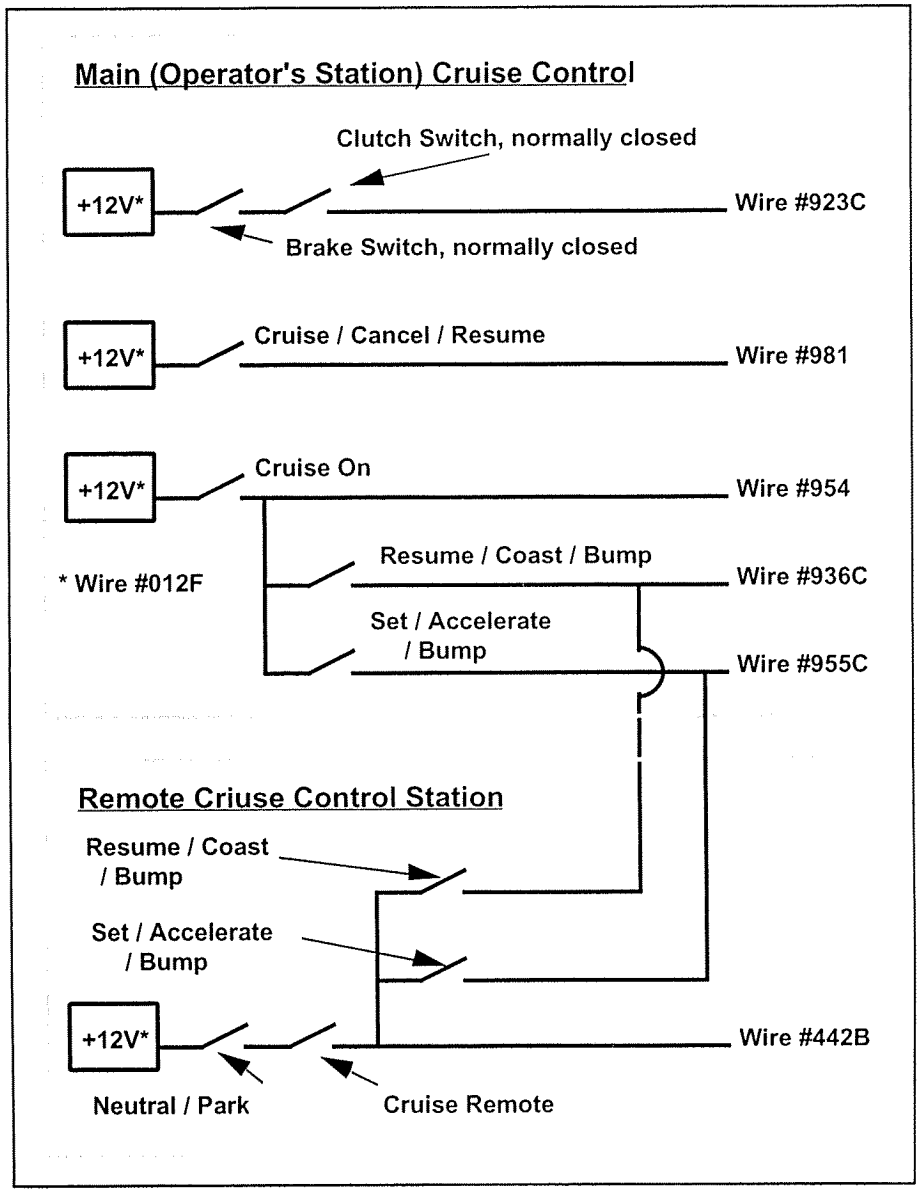

Figure AG-14 - 14, Cruise Control Wiring Diagram

Katolight Service - Master Repair Manual - Page 2929

The cruise control wires shown on the previous diagram (including switched battery power, Wire #012F) are accessed through the unterminated wire bundle in the engine wiring harness. For details of each wire and feature, refer to the following individual wire instructions

Cruise On - Wire #954 (yellow)

The Cruise Control at the operators station can be turned "ON" by supplying system voltage (Wire #012F, red) to the Cruise On Wire #954.

Two other conditions must exist for the Cruise Control function to be active. The Cruise Brake Enable - Wire #923C must also be connected to the positive system voltage lead (Wire #012F, red); and on 12-volt systems, the Cruise Remote - Wire #422B must be unpowered (i.e., turned "off").

Power for the Wire #936C and Wire #955C should come from Wire #954 as shown in Figure 124A-14. See the following sections on the functions of Wire #936C and Wire #955C

Cruise Resume / Coast / Bump Speed Down - Wire #936C (light blue)

At the main cruise control station, a momentary contact switch should be connected from Wire #936C to Wire #954. When the Cruise Control is "ON", a momentary contact on this circuit will return the engine speed to it's previous set speed. When contact is maintained, the engine speed set point will slowly decrease. The Cruise Resume / Coast / Bump Speed Down function has a ramped speed adjustment rate. The engine speed will decrease faster the longer the contact is held "ON".

At the remote cruise control station (if used), a momentary contact switch should be connected from Resume / Coast / Bump-down Wire (#936C) to Wire #442B.

Cruise Brake Enable - Wire #923C (orange)

The Cruise Brake Enable - Wire #923C should be connected to system voltage (Wire #012F, red) through a normally closed switch on the vehicle brake system. When the brakes are engaged, the circuit will be broken and the cruise control will disconnect but will retain the engine set speed in memory. For a transmission with a clutch, normally closed clutch and brake switches in series should be used.

The Cruise Brake Enable circuit (Wire #923C) disconnects both the main cruise controls in the operators station, and the remote cruise control station, if used.

Cruise Set / Accelerate / Bump Speed Up - Wire #955C (dark green)

At the main cruise control station, a momentary contact switch should be connected from Wire #955C to Wire #923C. When the Cruise Control is "ON", a momentary contact on this circuit will set the engine speed in memory. When contact is maintained, the engine speed set point will slowly increase. The Cruise Set / Accelerate / Bump Speed Up function has a ramped speed adjustment rate. The engine speed will increase faster the longer the contact is held "ON".

At the remote cruise control station (if used), a momentary contact switch should be connected from the Set / Accelerate / Bump Up Wire (#955C) to Wire #422B.

Cruise Cancel/Resume - Wire #981 (brown)

The Cruise Cancel/Resume Wire (#981) is connected to battery voltage (Wire #012F, red) with a momentary contact switch. A high quality switch with gold contacts should be used.

The Cancel/Resume function is active for one minute while the operator turns around the vehicle. If the Cancel/Resume contact is not made, the engine reverts to normal Cruise Control (i.e., resuming speed requires using the "Resume" switch).

Cruise Cancel/Resume will not resume at engine speeds below 1300 RPM

The cruise Cancel/Resume function does not operate when Cruise Remote - Wire #422B is active.

Katolight Service - Master Repair Manual - Page 2930

Katolight Service - Master Repair Manual - Page 2931

12-volt Cruise Remote - Wire #422B (red)

For a 12-volt ECU only: On ECU's with cruise control, Wire #422B is used to turn a second cruise control station on and off. This is intended for use where a remote engine speed adjustment is needed, such as at an external PTO location. When Wire #422B is connected to +12 volts (Wire #012F, red), the second cruise control station is switched on. When Wire #422B is turned "off" (no voltage, open circuit) the second cruise control station is switched off. The primary (dashboard) cruise control must be turned off for the second station to be used. If the ECU detects that two Cruise Control stations are "ON", the Cruise Control will not function.

The remote cruise control feature is not available on 24-volt systems. Wire #422B functions as the "24-volt start" wire in 24-volt systems. Refer to the "System Power and Ground" wiring section for details.

- **SECONDARY ANALOG THROTTLE POTENTIOMETER**

A second 3-pin male Weather-Pack throttle connector is provided on the Engine wiring harness for installations where two analog throttles are needed. The Adjustable 2-State throttle must be set in the "Low Speed" position for either analog throttle to work. The "Secondary" analog throttle can be used with or without the "Primary" analog throttle installed.

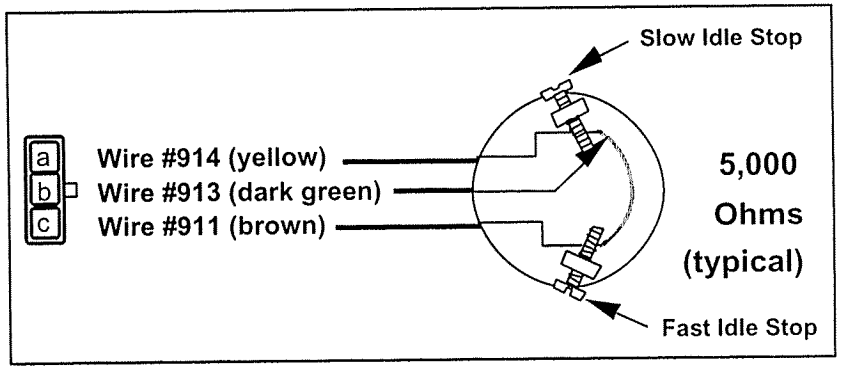

Figure AG-14 - 15, Secondary Analog Throttle Potentiometer

The second analog throttle feature is intended for use when a foot throttle and a hand throttle must both be provided. It can also be used when two throttle inputs are operated by the same lever or pedal for back-up purposes. When both analog throttles are used, the throttle signals will be additive, up to the factory preset fast idle setting or the maximum speed set with the Adjustable 2-State Throttle. There will be no "dead band" in either throttle. When you move the foot throttle, speed will immediately increase regardless of where the hand throttle is set.

The secondary analog throttle feature is not intended for use with two throttles located remotely from each other. Because the throttle signal is additive, if either throttle is at the full speed position, the other throttle will have no control. Both throttles must be in the slow idle position for the engine to operate at slow idle.

For remote throttle applications, we suggest the use of the cruise control feature instead of the secondary throttle.

If used, the Secondary Analog Throttle must be wired and adjusted exactly the same as the primary analog throttle. It can be used with the RE69667 potentiometer throttle or any similar unit.

Unlike the primary throttle, if the secondary throttle is not used, the special RE503681 throttle emulator is not required. To install a secondary analog throttle, unplug the dust cap provided with the wiring harness, and plug the throttle into the same connector. If a secondary throttle is not used, the dust cap should be left in place.

- **AUXILIARY FAULT LAMP**

Wire #916 (light blue) switches a customer supplied fault lamp on during a system fault condition. It is designed to operate the ground side of a 12-volt or 24-volt indicator light. Wire #916 should be connected to the ground terminal of a 12-volt or 24-volt light bulb socket. The positive terminal of the light bulb socket should be connected to positive system voltage (Wire #012F, red). The fault lamp will "blink" when a "Warnings" problem is detected by the ECU. "Warnings" include lower than normal oil pressure, higher than normal coolant temperatures, higher than normal charge air temperatures, or power derates. The fault lamp will be continuously "ON" when a "Shutdown" problem is detected. "Shutdown" problems include extremely low oil pressure, extremely high coolant temperatures, and loss of coolant. On ECU's with shutdown enabled, a solid "ON" fault lamp indicates that the engine will shutdown within 30 seconds.

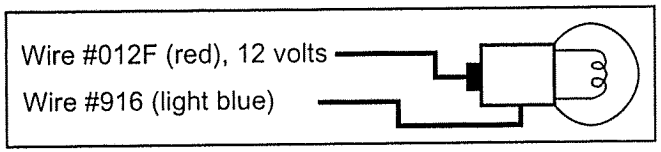

Figure AG-14 - 16, Auxiliary Fault Lamp Wiring

This circuit will support a maximum current of 100 mA. It should not be used to drive any load larger than a 1-Watt bulb. For driving larger loads, such as audible alarms, we recommend installing the RE162427 alarm module that plugs into the databus module in the instrument panel. It includes a relay for additional loads up to 0.5 Amps at 125 volts AC, 1 Amp at 12-24 volts DC, or 62.5 VA, 30 Watts max.

Wires #916 and #012F can be found in the unterminated wire bundle. Connecting this circuit is not required unless you want an auxiliary fault lamp. The RE68155 Diagnostic gauge already has amber and red "Warning" and "Stop Engine" lamps built in.

- **EXTERNAL DERATE / SHUTDOWN INPUT**
  Wire #941C is provided in the unterminated wire bundle to allow the OEM to trigger the engine warning, derate, and shutdown sequence from external switches, such as a loss of prime switch, hydraulic overtemperature switch, or low coolant level switch. Any number of normally open switches that switch to ground to trigger the warning/derate/shutdown sequence can be added in parallel.

  When Wire #941C is open (not grounded), the engine will operate normally. When Wire #941C is switched to ground, the ECU will turn on a solid fault lamp. It may also activate a derate/shutdown sequence, depending on which ECU you have specified:

  1. **For ECUs <u>without</u> the "Engine Protection" feature enabled:** The ECU will not derate the engine or shut it down. It is up to the operator to shut down the engine and resolve the problem.

  2. **For ECUs <u>with</u> the "Engine Protection" feature enabled:** The ECU will reduce engine power at the rate of 1% per second for a maximum reduction of 60% (40% of normal power remaining), but it will not shut the engine down. It is up to the operator to shut down the engine and resolve the problem.

  3. **For ECUs with the "Engine Protection <u>and Shutdown</u>" feature enabled:** The engine will reduce engine power at the rate of 1% per second for 30 seconds. At 30 seconds, the engine will automatically shut down.

  If Wire #941C returns to an open circuit condition within the 30-second delay period, the engine will resume original power (rising at a rate of 1% per second), and the engine will not shut off. The fault lamp will continue to flash until the power returns to normal, then it will shut off.

  Note: The engine will not shut down immediately when Wire #941C is grounded, so it should not be used if an immediate shutdown is required. If an immediate shutdown is required, a separate magnetic shutdown switch should be added to Wire #002C in the engine wiring harness to break the connection to the battery.

  The cylinder head temperature switch is connected in parallel with Wire #941C, so a loss of coolant will trigger the same warning/derate/shutdown sequence as an external switch. This should not effect the operation of Wire #941C during normal use, but if the engine shuts down due to the signal on Wire #941C, it could be either from an external switch or from the cylinder head temperature switch.

Katolight Service - Master Repair Manual - Page 2932

CONTROLLER AREA NETWORK (CAN)

The CAN bus is a high speed open interconnect network for electronic systems on on-highway and off-road vehicles and stationary equipment. It allows electronic systems to communicate with each other through a standard architecture of electronic signals over shielded twisted pair wires. Engines can communicate with throttles, transmissions and brakes, vehicles can communicate with trailers, agricultural and construction equipment can communicate with implements and accessories, stationary equipment can communicate with controllers or other networked equipment. Information on the network can be displayed to the operator on a Virtual Terminal (instrument panel) or relayed to another location via telemetry. Up to 30 Electronic Control Units or modules can be connected together through a single CAN network segment.

A CAN connection (SAE J1939) is provided in two different locations on the Engine wiring harness. A round Deutsch 9-pin connector is provided primarily for service/diagnostic purposes. A Deutsch 3-pin wedge connector, intended for customer computer interface, has also been provided.

The pins in the Deutsch connectors are:

Deutsch 9- pin round Connector Pin	**Function**
Pin A, Wire #050D (black)	Ground
Pin B, Wire #012B (red)	Power Supply (+12 or +24 volts)
Pin C, Wire #904D (yellow)	CAN_H
Pin D, Wire #905D (dark green)	CAN_L
Pin E, Wire #020D (black)	Shield
Pins F through J	Spare (unused)

Deutsch 3-pin wedge Connector Pin	**Function**
Pin A, Wire #904A (yellow)	CAN_H
Pin B, Wire #905A (dark green)	CAN_L
Pin C, Wire #020A (black)	Shield

Standard CAN bus messages are listed in the Component Technical Manual. Special CAN messages are required for use with electronically controlled Allison transmissions.

For details on how to use this system, refer to SAE J1939/11 published by the Society of Automotive Engineers, 400 Commonwealth Drive, Warrendale PA 15097-0001.

PROVIDING YOUR OWN INSTRUMENT PANEL

If you choose not to use the RE162429 instrument panel, you will have to provide your own ignition switch, fuse holder, throttle device, wiring harness, diagnostic gauge, and any other instrumentation and controls you need.

You can design your own instrumentation and controls wiring harness, or you can adapt to the RE505259 wiring harness and RE162450 databus module used on the RE162429 panel.

Using The RE505259 Instrument Panel Harness and RE162450 Databus Module

To adapt the RE505259 Instrument panel harness and RE162450 databus module, refer to the following diagram, and to the notes following the diagram. The wire numbers shown on the diagram are printed on each wire.

Katolight Service - Master Repair Manual - Page 2933

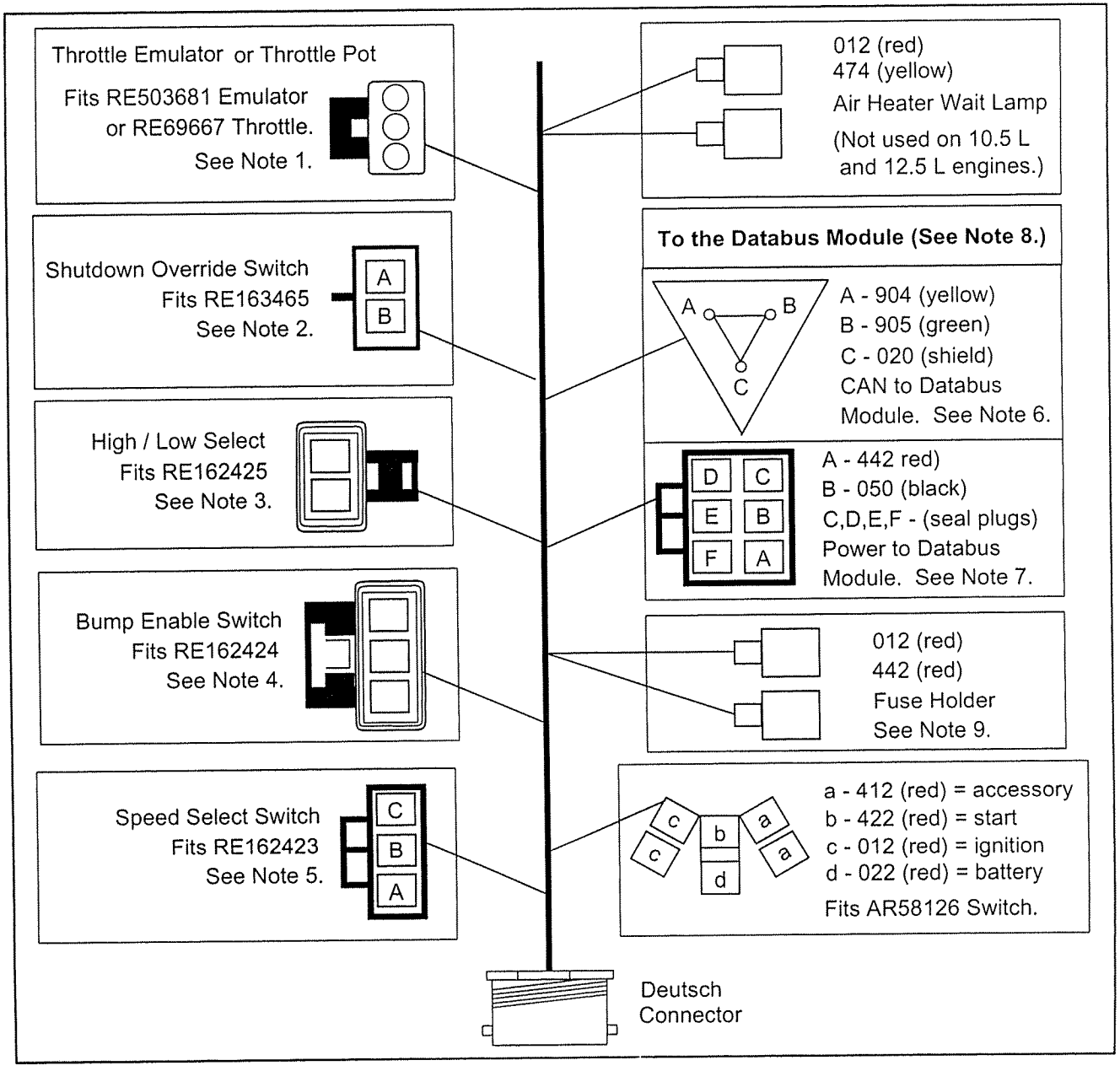

Figure AG-14 - 17, RE505259 Instrument Panel Harness

Katolight Service - Master Repair Manual - Page 2934

1. **Analog Throttle Potentiometer**
The RE69667 analog throttle is a customer installed option. The standard panel has a RE503681 throttle emulator installed to properly terminate the throttle inputs of the ECU. RE503681 is a resistor network that places the analog throttle input in the active area of its operating range. The harness connection is a Packard Weather-Pack 3-cavity, female connector, #12020829, with male terminals, #12124582, and cable seals installed. Note that these are the opposite terminals usually used with this connector.

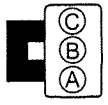

Pin	Circuit	Color	Size	Destination
C	911	Brown	18 AWG	to Pin "M" on Deutsch Connector
B	913	Orange	18 AWG	to Pin "L" on Deutsch Connector
A	914	Yellow	18 AWG	to Pin "C" on Deutsch Connector

Figure AG-14 - 18, Analog Throttle Potentiometer Pin Connectors

See previous sections for analog throttle functional details.

2. **Shutdown Override Switch**
The shutdown override switch is a single-pole, single-throw, normally-open, momentary rocker switch used to temporarily override an engine shutdown. The harness connection is a Packard Metri-Pack 150 Series two cavity male connector, #12162000 with #12045773 sealed male terminals, cable seals and a #12052634 TPA or secondary lock.

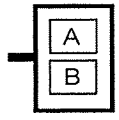

Pin	Size	Destination
A	18 AWG	to Pin "N" on 21-Pin Connector
B	18 AWG	to Pin "P" on 21-Pin Connector

Figure AG-14 - 19, Shutdown Override Switch Pin Connectors

On Engine ECU's with the Engine Protection Shutdown feature active, the Engine Protection shutdowns can be overridden for 30 seconds at a time. This can be used to move a vehicle to a safe location.

The Shutdown Override is activated when pin A (Wire #464) is connected to pin B (Wire #918). For ECUs with the Engine Protection Shutdown feature active, the 2-pin connector should be connected to a normally open momentary switch. A special RE163465 push button assembly is available from John Deere for this purpose that plugs directly into the shutdown override connector.

If the circuit is open (button not pushed), the engine will shutdown 30 seconds after an automatic shutdown sequence starts. Each time the circuit is completed (button pushed), the shutdown timer is reset to a full 30 seconds and the engine will run in a derated power mode. Repeated connection of the Shutdown Override circuit each 30 seconds will allow for continued engine operation.

Note: Holding the Shutdown Override continuously "ON" will not reset the 30 second timer.

Manually shutting down the engine and turning power "off" to the ECU will reset the ECU. Using the Shutdown Override is not required on engine starts or restarts if the ECU power has been turned "off".

On Engine ECU's that do not have the shutdown feature active, the Shutdown Override is disabled.

Katolight Service - Master Repair Manual - Page 2935

Katolight Service - Master Repair Manual - Page 2936

3. **High/Low Speed Select**
The RE162425 high/low speed selector switch is part of the Adjustable 2-State Throttle. The RE162425 switch is a single-pole, double-throw switch used to select between high idle and low idle.

The mating connector to this switch is a Packard Metri-Pack 150 Series two-cavity female connector, #12052641, with #12048074 sealed female terminals, cable seals and a #12052634 TPA or secondary lock.

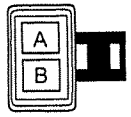

Pin	Circuit	Color	Size	Destination
A	914	Yellow	18 AWG	to Pin "S" on Deutsch Connector
B	947	Violet	18 AWG	to Pin "R" on Deutsch Connector

Figure AG-14 - 20, High/Low Speed Select Pin Connectors

The switch contains two resistors, 390 Ohm and 1.3K Ohm. When in the slow idle position, the 390-Ohm resistor is placed in the circuit and when in the high idle position, the 1.3k-Ohm resistor is placed in the circuit.

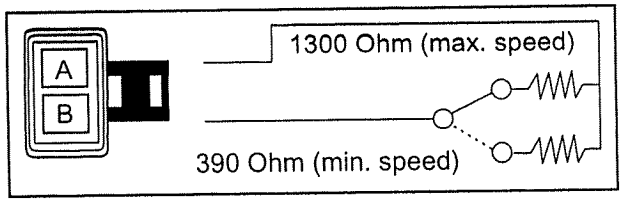

Figure AG-14 - 21, High/Low Speed Select Resistor Wiring

This connector cannot be left open on ECUs equipped with the adjustable 2-state throttle. If the 2-state toggle-switch throttle is not used, one of the two following things must be done:

1. For continuous operation at the factory preset rated speed, with no ability to operate at low idle or any other reduced speed, a 1300-Ohm resistor can be permanently wired between Wires #947 and #914.

2. For use with an analog throttle potentiometer without a 2-state toggle-switch throttle, a 390-Ohm resistor should be permanently wired between Wires #947 and #914.

   The adjustable 2-state throttle is not active in ECUs equipped with cruise control, so this terminal need not be connected on cruise control ECUs.

4. **Bump Enable Switch**
The bump enable switch is used in conjunction with the speed select switch (see note 5, below) to adjust minimum and maximum operating speed. The bump enable switch enables the speed select switch to be read by the ECU. To adjust the minimum or maximum operating speed, the bump enable switch and speed select switch must be operated simultaneously. This prevents unexpected operating speed changes in the event of a failure of the speed select circuit.

As a convenience for the operator, the RE162424 bump enable switch used in the RE162429 Instrument Panel has two enabling positions, up or down, with the center off. The switch is a single-pole, double-throw, momentary with a detented center off position. Both active positions are wired to connect the same two-wire circuit when pressed.

The mating connector on the RE505259 instrument panel harness for this switch is shown below. It is a Packard Metri-Pack 150 Series three-cavity female connector, #12110293, with #12048074 sealed female terminals, #12048086 cable seals, and #12052845 TPA or secondary locks. The unused cavity has a #12059168 cavity plug installed.

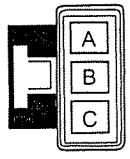

Pin	Circuit	Color	Size	Destination
A	923	Orange	18 AWG	to Pin "X" on Deutsch Connector
B	012	Red	18 AWG	to IGN circuit from key switch
C		Cavity Plug		Unused

Figure AG-14 - 22, Bump Enable Switch Pin Connectors

5. **Speed Select Switch**
The speed select switch, also known as the bump switch, is used to increment and decrement the minimum and maximum operating speeds. It must be used with the bump enable switch (see note 4, above).

The mating connector on the RE505259 instrument panel harness for this switch is shown below. It is a Packard Metri-Pack 150 Series three-cavity male connector, #12129615, with #12045773 sealed male terminals, #12048086 cable seals, and #12052845 TPA or secondary locks.

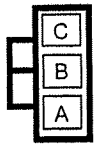

Pin	Circuit	Color	Size	Destination
C	936	Blue	18 AWG	to Pin "T" on Deutsch Connector
B	012	Red	18 AWG	to IGN circuit from key switch
A	955	Green	18 AWG	to Pin "W" on Deutsch Connector

Figure AG-14 - 23, Speed Select Switch Pin Connectors

The RE162423 speed select switch used in the RE162429 Instrument Panel is a single-pole, double-throw, momentary switch with a detented center off position, wired as follows.

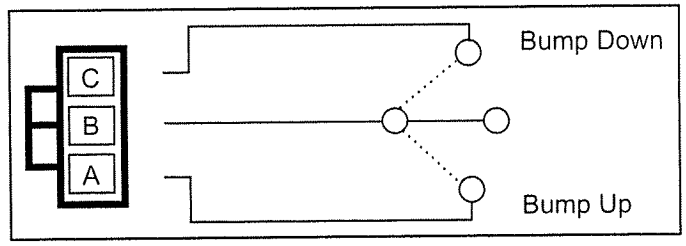

Figure AG-14 - 24, Speed Select Switch Wiring

When the bump enable switch is closed, and the speed select switch is momentarily moved to the "bump up" position, the operating speed will go up slightly. If the speed select switch is momentarily moved to the "bump down" position, the operating speed will go down slightly. Maximum operating speed will be adjusted if the high/low speed select switch is in the "High" position. Minimum operating speed will be adjusted if the high/low speed select switch is in the "Low" position.

Both preset speeds (high and low) will be remembered, even if the ignition is turned off. If the ECU is ever disconnected from battery power, the maximum high and low speeds will be reset to the factory fast and slow idle speeds, and will have to be reset if desired.

If the adjustable 2-state toggle-switch throttle is not used, nothing needs to be plugged in to this connector

Katolight Service - Master Repair Manual - Page 2937

6. CAN Connection to RE162450 Databus Module

The CAN connection to the databus module is made through SAE J1939 compatible shielded, twisted-pair cable. The mating connector on the RE505259 instrument panel harness for the databus CAN connection is a Deutsch DT06-3S-E003 connector with W3S-1939 secondary locking wedge, as shown below. It plugs in to the databus as shown. The shield is attached to black wires at each end for proper termination in the connectors.

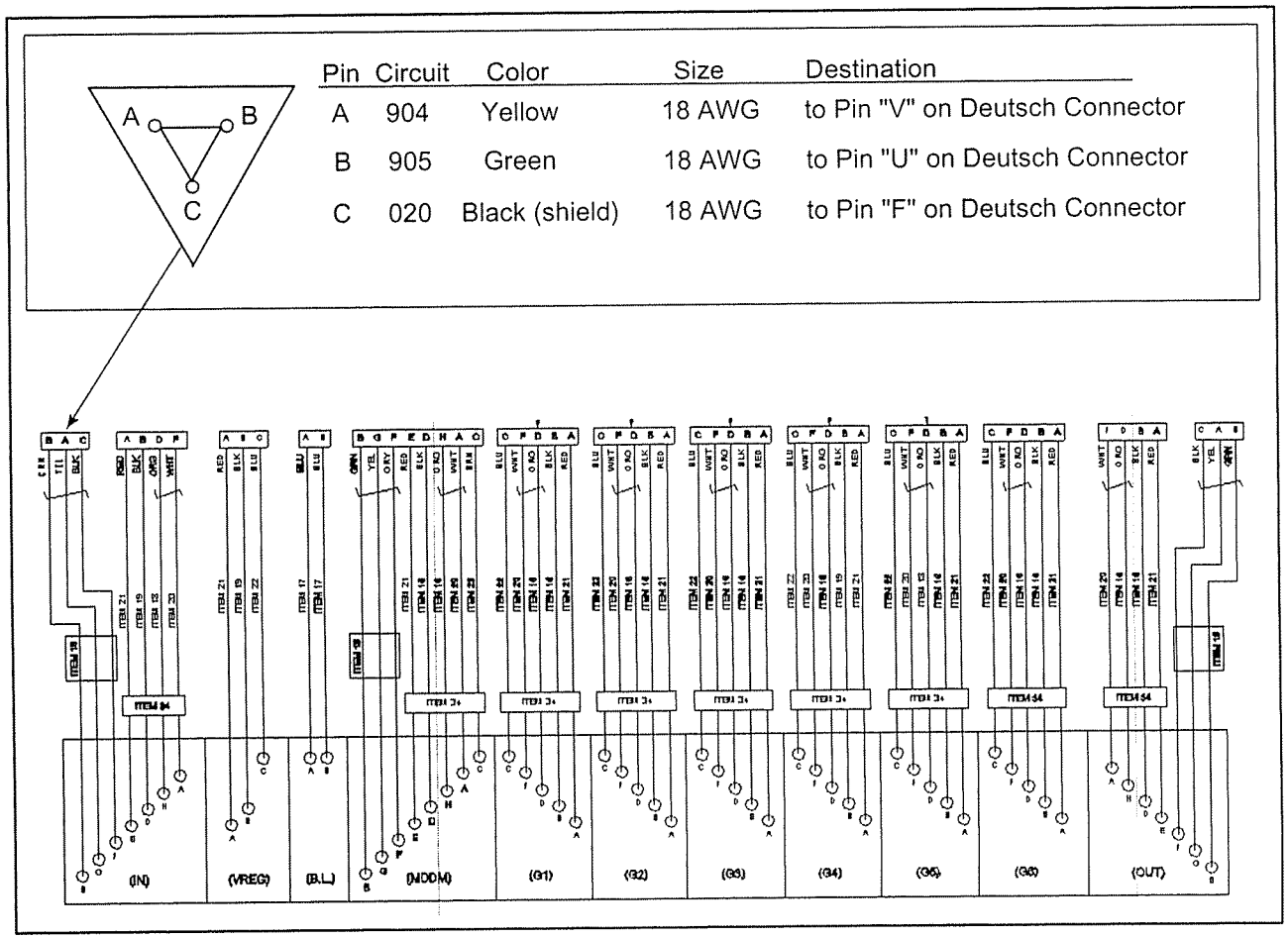

Figure AG-14 - 25, CAN Connectors

Katolight Service - Master Repair Manual - Page 2938

7. Power Connection to the Databus Module

Power is provided to the databus module through a Packard Metri-Pack 150 Series 6-cavity male connector, #12124107, with #12045773 sealed male terminals, #12048086 cable seals, and #12052845 TPA or secondary locks on the RE505259 instrument panel harness. The unused cavities are plugged with #12059168 cavity plugs. The connector on the instrument panel harness is shown below. It plugs in to the databus as shown.

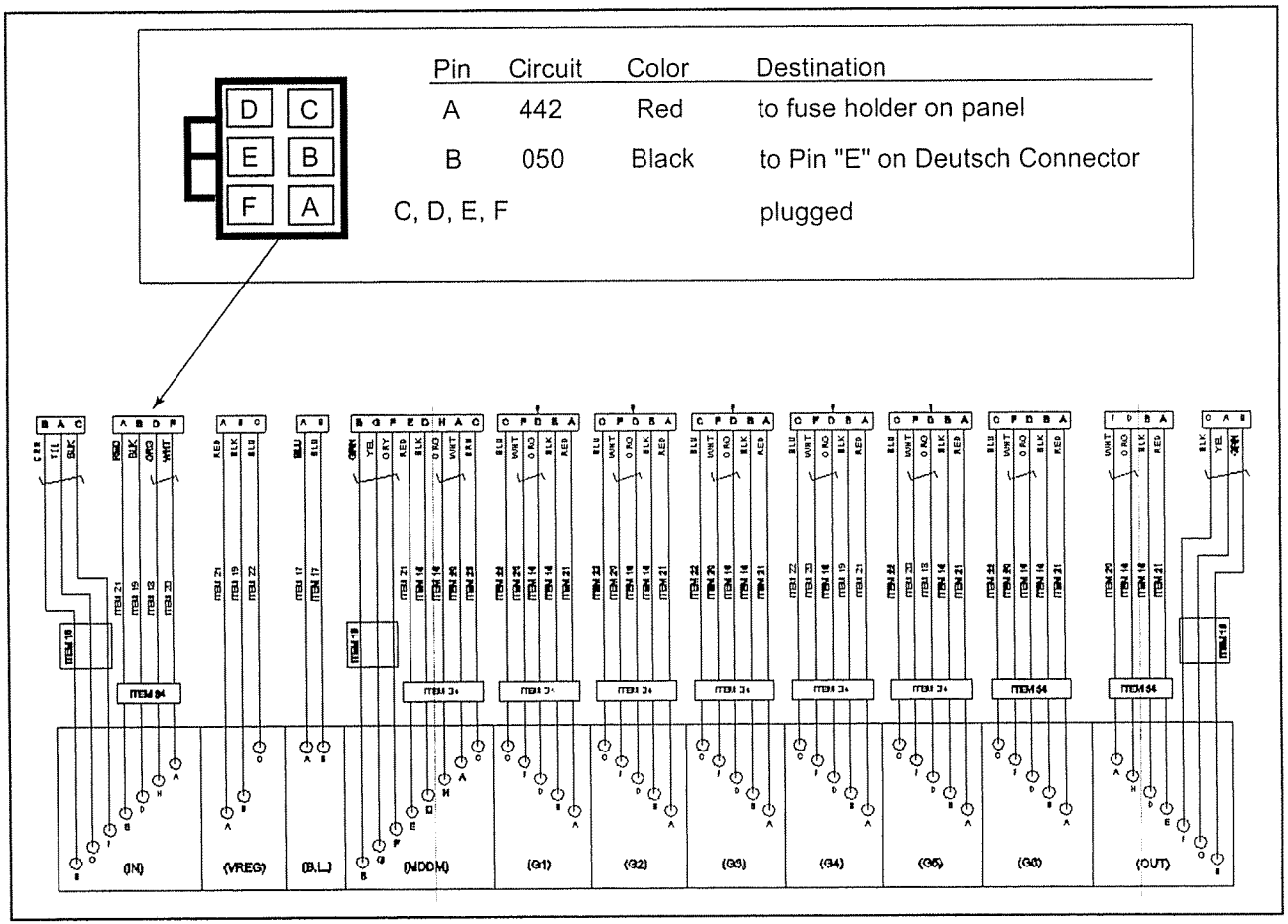

Figure AG-14 - 26, Power Connection to the Databus Module

Katolight Service - Master Repair Manual - Page 2939

8. Diagnostic Gauge Connection to the Databus Module

The main purpose of the databus module is to provide wiring for the Diagnostic gauge and up to six auxiliary analog gauges (tach, oil pressure, etc.) with backlighting and dimmer controls. Details of how to use the databus module are covered in several previous sections. The only thing not covered has been the location of the RE68155 diagnostic gauge, which plugs into the 8-pin connector as shown below. The last two connectors on the right are used for bus termination, or to connect a complete auxiliary (flybridge) instrument panel in marine applications. The connector on the far right carries the CAN signal. When the auxiliary panel is not used, a terminator cap with a 120 Ohm resistor must be installed on both the CAN signal connector, and the analog auxiliary gauge connector, as shown below. The special terminator caps with resistors come with the databus module.

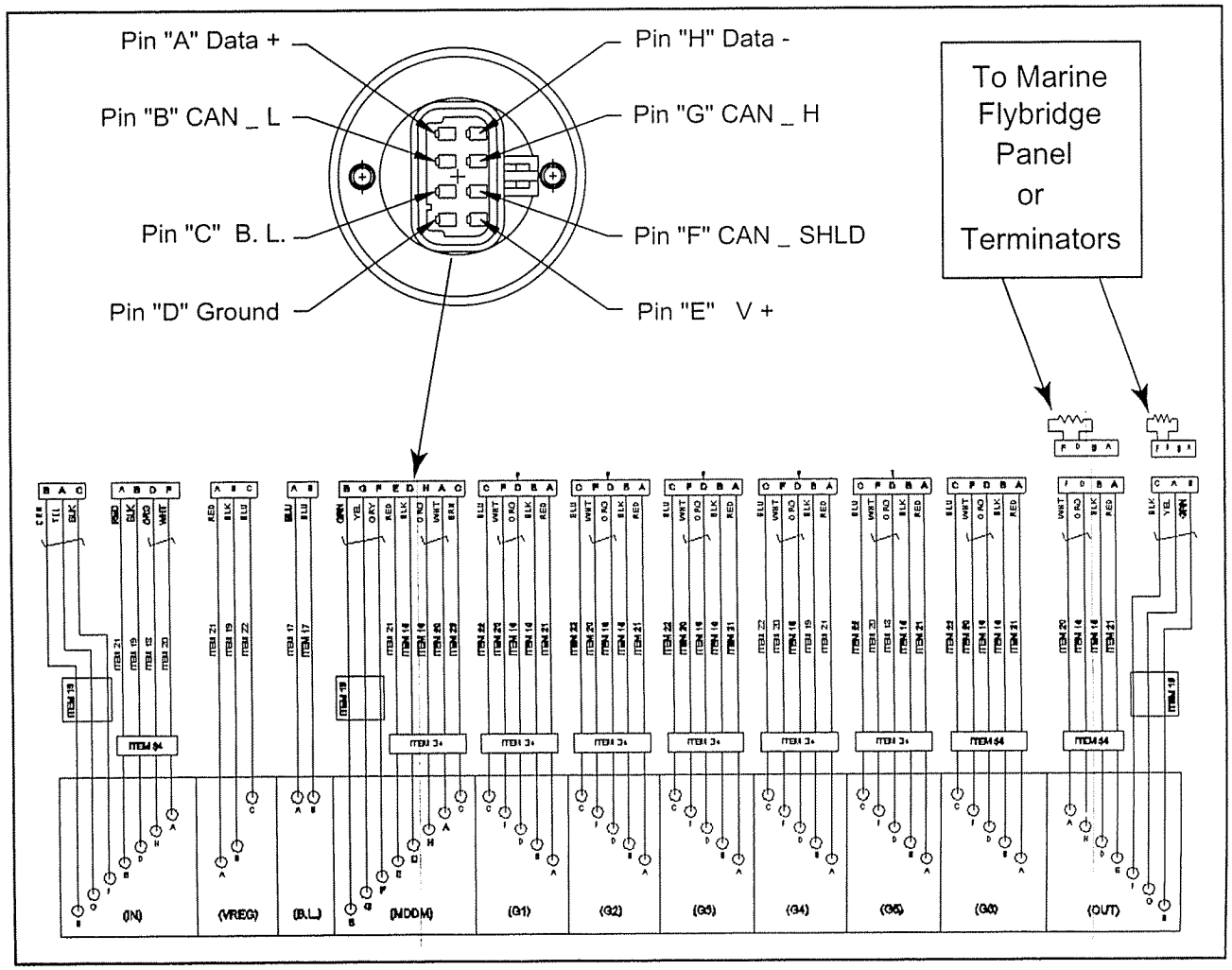

Figure AG-14 - 27, Diagnostic Gauge Connection to the Databus Module

Katolight Service - Master Repair Manual - Page 2940

9. Fuse Holder

The panel mounted fuse holder connects with two 0.25" insulated female, solderless disconnect terminals, similar to Amp #42844-1. Connect one wire to IGN, circuit 012, from the key switch and the other wire to Pin A, circuit 442, of the Packard connector described in Note 7 above.

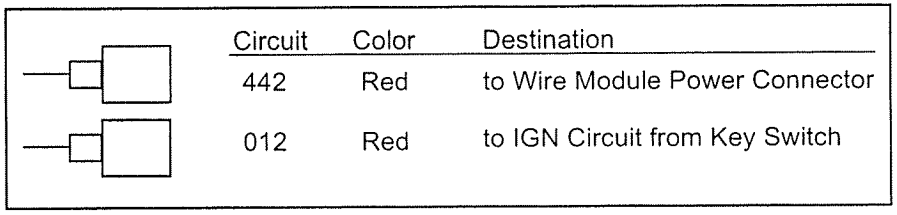

Circuit	Color	Destination
442	Red	to Wire Module Power Connector
012	Red	to IGN Circuit from Key Switch

Figure AG-14 - 28, Fuse Holder Connectors

These connectors are designed to fit the AE21116 fuse socket. Any fuse socket with 1/4" male blade connectors can be used. A 5-Amp fuse with the following characteristics (per SAE J1284) must be used:

Rating	Blow time
110%	100 hours, minimum
135%	1500 seconds, maximum
200%	5 seconds, maximum
350%	0.08 seconds, minimum

Table AG-14 - 02, Fuse Characteristics (per SAE J1284)

10. Intake Air Heater Wait Lamp

A plugged mounting hole is provided for the RE67334 heat lamp assembly. The lamp socket connects with two 0.187" insulated female, solderless disconnect terminals, similar to Amp #640919-1. Connect one wire to IGN, circuit 012, from the key switch and the other wire to Pin A, circuit 474, of the Deutsch connector.

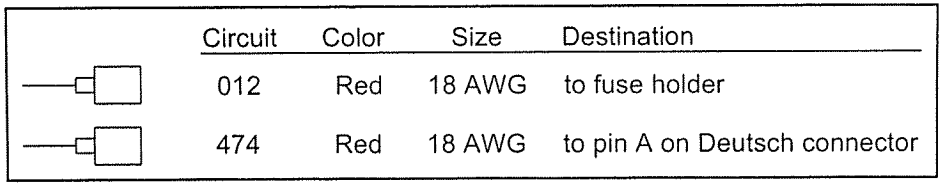

Circuit	Color	Size	Destination
012	Red	18 AWG	to fuse holder
474	Red	18 AWG	to pin A on Deutsch connector

Figure AG-14 - 29, Intake Air Heater Wait Lamp Connectors

Katolight Service - Master Repair Manual - Page 2941

MAKING YOUR OWN INSTRUMENATION AND CONTROLS WIRING HARNESS

A 21-pin Deutsch connector is provided on the Engine wiring harness that comes with the engine to interface with your instrumentation and controls. To make your own instrumentation and control wiring harness, refer to the above sections on individual component wiring and function, and to the following chart on the 21-pin Deutsch connector.

Instrument Panel Connector Pin Assignments			
Pin	**Wire**	**Description**	**Used On**
A	474	Intake heater wait lamp	To ground side of intake air heater wait lamp
B	022C	Battery power	To "B" terminal of your ignition switch
C	914B	Sensor return	To the primary analog throttle potentiometer or emulator
D	422	Starter relay	To "Start" terminal on your ignition switch
E	050D	Ground	Grounded to the battery and ECU. Use for any non-sensor ground (lights, gauge power, etc)
F	020C	CAN shield	To any CAN connectors including the diagnostic gauge
G	012B	Battery power to ECU (switched)	Must be wired to the "Ignition" terminal of key switch.
H	N/A	N/A	This pin is not currently used
J	412	Alternator ignition	Should be wired to the "Accessory" terminal of a two pole ignition switch. Must not be wired directly to the same switch terminal as Wire #012B (power to ECU). If a single pole ignition switch is used, a diode is required in the circuit (refer to the Electrical section of DSEG01 for single pole ignition switch wiring requirements).
K	N/A	N/A	This pin is not currently used
L	915	Primary analog throttle input voltage	To center (sensing) terminal of the primary analog throttle potentiometer (or throttle emulator)
M	911B	+5 Volts (sensor power)	To the throttle potentiometer
N	918	Shutdown override return	To shutdown override switch
P	464B	Shutdown override	To shutdown override switch
R	947	High/Low speed select	To the High/Low speed select switch
S	414B	High/Low speed return	To the High/Low speed select switch
T	936	Resume / Coast / Bump Speed Down	To the 2-state throttle speed select switch and/or the cruise control resume/coast switch
U	905C	CAN low	To the 9 and 3 pin CAN connectors, Diagnostic gauge and/or Instrument panel databus module
V	904C	CAN high	To the 9 and 3 pin CAN connectors, Diagnostic gauge and/or Instrument panel databus module
W	955	Set / Accelerate / Bump Speed Up	To the 2-state throttle speed select switch and/or the cruise control set/accelerate switch
X	923	Bump enable and brake enable	To the cruise brake enable switch and/or 2-state throttle bump enable switch

Table AG-14 - 03, Pin Connector Assignments for "Make-Your-Own" Instrument Panel

To connect your instrumentation and controls to the 21-pin Deutsch connector on the Engine wiring harness, refer to the illustration below, and the above

Katolight Service - Master Repair Manual - Page 2942

To connect your instrumentation and controls to the 21-pin Deutsch connector on the Engine wiring harness, refer to the illustration below, and the above sections on individual component wiring and function. Your wiring harness will need a Deutsch (part number - HDP-24-24-21PE) 21-pin connector mounted with a 112263-90 nut and 112264 washer.

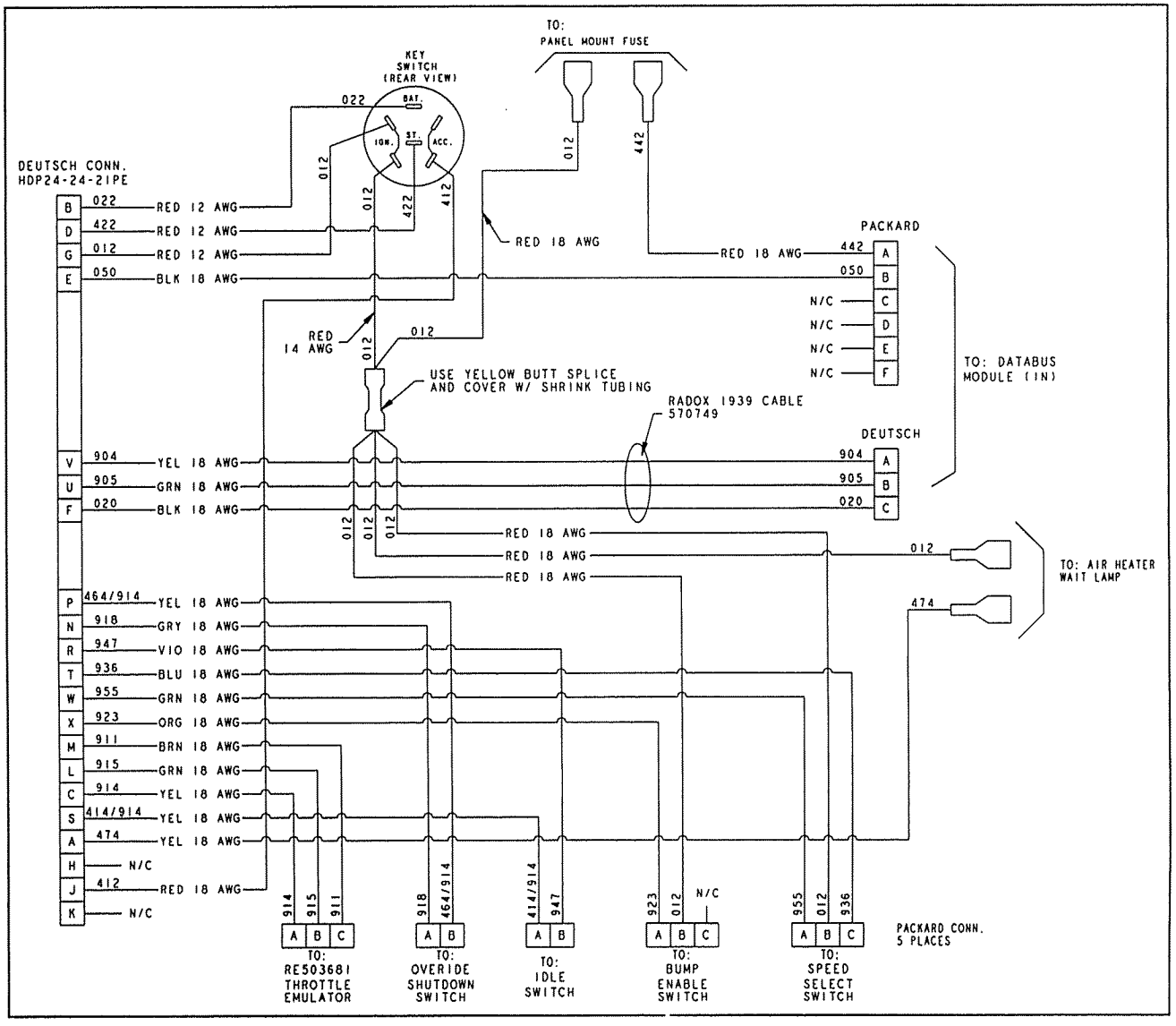

Figure AG-14 - 30, Instrumentation and Controls Connections

Katolight Service - Master Repair Manual - Page 2943

Using The RE68155 Diagnostic Gauge With Your Own Design Wiring Harness

To connect the RE68155 Diagnostic Gauge, we strongly recommend using the RE162450 databus module. The databus module has internal noise filters to reduce radio frequency noise picked up from the harness. If you do not use the RE162450 databus module you can wire directly to the diagnostic gauge as shown below. However, you may suffer from RF noise problems.

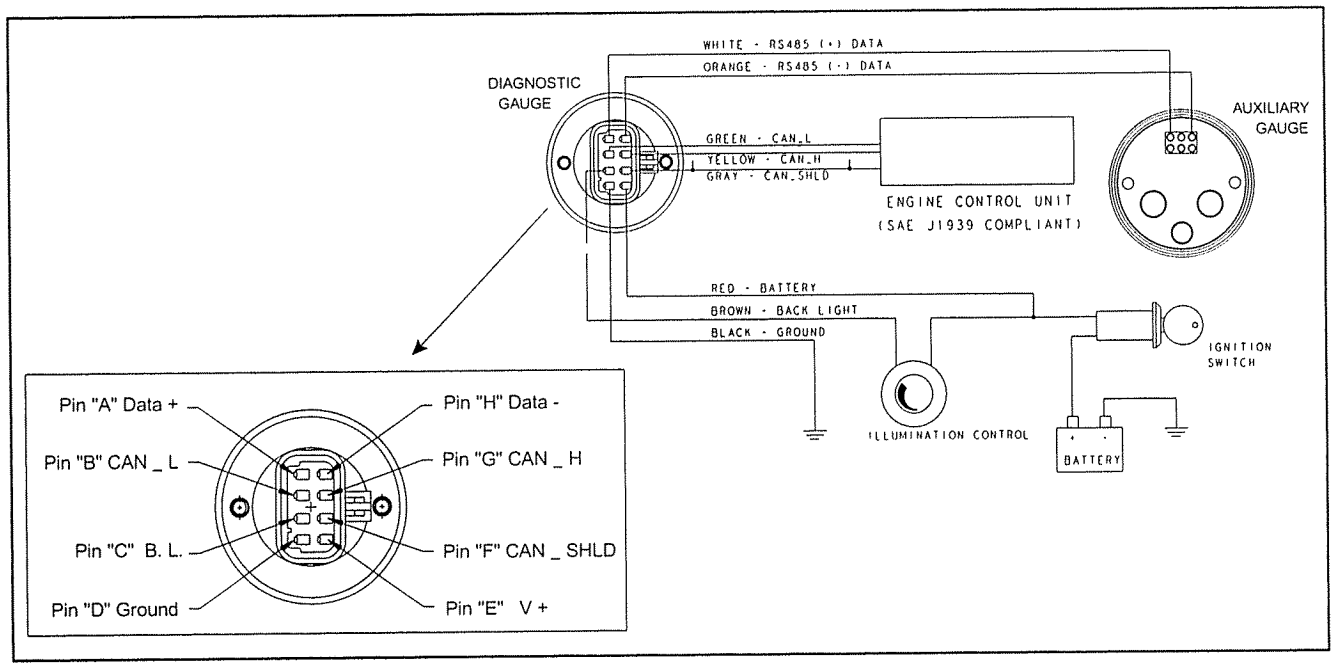

Figure AG-14 - 31, Direct Wiring to the diagnostic Gauge

Note: The above illustration does not show complete wiring for auxiliary analog gauges.

Katolight Service - Master Repair Manual - Page 2944

Pin "E" is the battery connection, and has an allowable voltage range of 9 to 32 volts with respect to pin "D", or ground, for proper operation.

The mating connector for the diagnostic gauge is a Packard Metri-Pack, 150 Series, 8-way female connector.

Part	Part Number
Female connector assembly	12047937
TPA	12066304
sealed terminals, 16-18 AWG(1.0-.8 sq mm)	12048074
sealed terminals, 20-22 AWG(.5-.35 sq mm)	12084200
cable seals, 2.85-2.03 mm dia	12048086
cable seals, 2.15-1.60 mm dia	12089678
cable seals, 1.70-1.29 mm dia	12048087

The terminal and cable seals should be selected for the size of wire used. All of the terminal positions on the diagnostic gauge connector are used. If the mating connector does not use a position for a particular application, each unused position should be filled with a cavity plug, part number 12059168, to ensure sealing of the entire connector assembly.

If dimming is desired, an electronic dimming switch such as RE162449 would normally be used. The dimming switch controls the voltage to the backlight circuit from full voltage (approximately 14 volts for a 12-volt system) for full brightness, to approximately 0 volts for the lowest brightness. The maximum voltage rating of RE162449 is 14.7 volts. If a 24-volt system is used, a voltage regulator such as RE162448 must be used to reduce the 24 volts to 12 volts for the backlighting circuit. The backlight system in the diagnostic gauge and the other electric gauges uses Light Emitting Diodes (LEDs). LEDs require approximately 2 volts to turn on. The voltage range for usable backlighting will be about 2 volts to 14 volts.

Katolight Service - Master Repair Manual - Page 2945

Using Auxiliary Analog Gauges With Your Own Design Wiring Harness

To use auxiliary analog gauges with the RE68155 diagnostic gauge, we strongly recommend using the RE162450 databus module. The databus module has internal noise filters to reduce radio frequency noise picked up from the harness. If you do not use the databus module you can wire auxiliary analog gauges directly as shown below. However, you may suffer from RF noise problems.

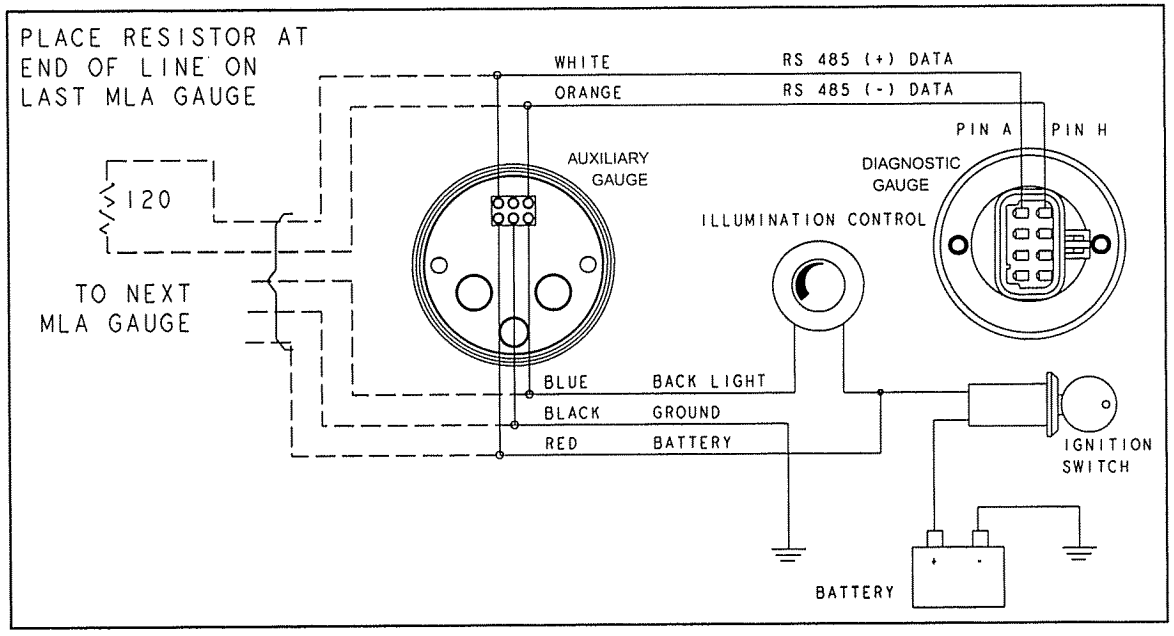

Figure AG-14 - 32, Direct Wiring of the Auxiliary Analog Gauges

A 120-Ohm resistor must be installed after the furthest auxiliary analog gauge from the diagnostic gauge, as shown. This resistor is included with the databus module.

MAKING YOUR OWN ENGINE / ECU WIRING HARNESS

This manual alone does not provide enough information to make your own engine/ECU wiring harness. To manufacture your own harness you will need this manual, a copy of the R502338 ECU wiring diagram, and the latest manufacturing drawing of the standard John Deere wiring harness for your engine. Only the specified John Deere sensors can be used. Other sensors should not be applied.

Katolight Service - Master Repair Manual - Page 2946

REFERENCE INFORMATION

"Metri-Pack" and "Weather Pack" connectors are products of the Packard Electronics Division of Delphi Automotive Systems.

Delphi Automotive Systems
Worldwide Headquarters,
United States & Canada Headquarters
One Pontiac Plaza
Pontiac, Michigan 48340-2952
USA
Toll Free: [1] 888.255.7179
Tel: [1] 810.857.4323
Fax: [1] 810.857.4248
web: http:\\www.delphiauto.com/electric/

Delphi Automotive Systems
Asia Pacific Headquarters
1-1-110 Tsutsujigaoka
Akishima-shi, Tokyo 196
Japan
Tel: [81] 425.49.7200
Fax: [81] 425.42.3018

Delphi Automotive Systems
European Headquarters
117 Avenues des Nations, BP 60059
Zac Paris Nord II
95972 Roissy Charles de Gaulle Cedex
France
Tel: [33] 1.4990.4990
Fax: [33] 1.4990.4950

Delphi Automotive Systems
Mexico & South American Headquarters
Av. Goiás, 1820
São Caetano do Sul
São Paulo 09550-050
Brasil
Tel: [55] 11.741.9500
Fax: [55] 11.741.9599

For information on SSAE J1939 CAN standards contact:

Society of Automotive Engineers (SAE)
400 Commonwealth Drive
Warrendale PA 15097-0001
USA
Tel: [1] 412 776-4841
Fax: [1] 412 776-5760
Email: isales@sae.org
web: http:\\www.sae.org/

Electronic Throttle Manufacturer:

Teleflex Morse Electrical Systems
(formerly Morse Controls)
6980 Professional Parkway East
Sarasota, FL 34240

Tel: 941-907-1000
Fax: 941-907-1020
web: http://www.tflx.com
Technical Support: techsupport@tflx.com

Deutsch Industrial Products Division
37140 Industrial Avenue
Hemet, CA 92545
Tel: [1] 909.765.2250
Fax: [1] 909.765.2255

Deutsch U.S. Distributor:
Ladd Industrial Sales
144 Westpark Road
Centerville, OH 45459
Toll Free: [1] 800.223.1236
Tel: [1] 513.438.0033
Fax: [1] 513.438.9755

Katolight Service - Master Repair Manual - Page 2947

Electronic Engine Controls -- JDEC (12.5 L)

Contents / Notes

Page

John Deere Electronic Control (JDEC12.5 L) System Diagram ..... AG-15 - 03
Introduction ..... AG-15 - 04
Features ..... AG-15 - 04
- Engine Diagnostics and Engine Protection ..... AG-15 - 04
  - Engine Protection ..... AG-15 - 04
    - No Protection ..... AG-15 - 04
    - Engine Protection Without Shutdown ..... AG-15 - 05
    - Engine Protection With Shutdown ..... AG-15 - 05
    - Shutdown Override Control ..... AG-15 - 05
  - Low Oil Pressure ..... AG-15 - 05
  - Coolant Temperature ..... AG-15 - 05
  - Water In Fuel ..... AG-15 - 06
  - High Charge Air Temperature ..... AG-15 - 06
  - High Fuel Temperature ..... AG-15 - 06
  - External Loss of Coolant Input ..... AG-15 - 06
  - External Derate and Shutdown Inputs ..... AG-15 - 06
  - Onboard Diagnostic Gauge Requirement ..... AG-15 - 06
- Power Bulge Protection ..... AG-15 - 07
- Fuel Temperature Compensation ..... AG-15 - 07
- Throttle Options ..... AG-15 - 07
  - Analog (Potentiometer) Throttles ..... AG-15 - 07
  - Adjustable 2-State Throttle ..... AG-15 - 07
- Cruise Control ..... AG-15 - 08
- Selectable Torque Curves and Governor Regulation ..... AG-15 - 08
  - Performance Program Connector ..... AG-15 - 09
  - Governor Settings for Gen-Sets ..... AG-15 - 10
- Controller Area Network (CAN) ..... AG-15 - 11

Basic Installation ..... AG-15 - 11
- ECU Mounting Requirements ..... AG-15 - 11
- Welding Precautions ..... AG-15 - 12
- Power and Ground Connections ..... AG-15 - 13
- Starter Relay ..... AG-15 - 14

Continued - -

Katolight Service - Master Repair Manual - Page 2949

Electronic Engine Controls -- JDEC (12.5 L)

Contents / Notes

Page

Instrumentation and Controls Wiring ..... AG-15 - 14
- Using the RE162429 Instrument Panel ..... AG-15 - 14
  - Standard Instrument Panel Features ..... AG-15 - 15
  - Optional Instrument Panel Features ..... AG-15 - 15
- Using the RE508625 Instrumentation and Wiring Kit ..... AG-15 - 15
- Making Your Own Instrumentation and Controls ..... AG-15 - 16
  - Minimum Required Wiring ..... AG-15 - 17
  - Basic Instrumentation and Controls Harness ..... AG-15 - 18
    - 21-Pin Deutsch Instrument Panel Connector ..... AG-15 - 19
    - Ignition Switch ..... AG-15 - 20
    - Analog Throttle Potentiometer ..... AG-15 - 20
    - Adjustable 2-State Throttle ..... AG-15 - 22
      - High / Low Select (Required) ..... AG-15 - 22
      - Speed Select "Bump" Switch ..... AG-15 - 23
      - Bump Enable Switch ..... AG-15 - 24
    - RE68155 Diagnostic Gauge ..... AG-15 - 25
      - Wiring the Diagnostic Gauge Directly to the 21-Pin Connector ..... AG-15 - 26
      - Using the RE507276 Diagnostic Gauge Adapter Harness ..... AG-15 - 28
    - Direct Auxiliary Gauge Wiring ..... AG-15 - 29
    - Using the RE162450 Databus Module ..... AG-15 - 30
    - Shutdown Override Switch ..... AG-15 - 33
- Additional Features ..... AG-15 - 34
  - Cruise Control ..... AG-15 - 34
  - High Air Cleaner Restriction Switch ..... AG-15 - 36
  - Low Coolant Level Switch ..... AG-15 - 36
  - External Stop-Engine Input ..... AG-15 - 36
  - External Derate Input ..... AG-15 - 37
  - Auxiliary "Warning" Lamp ..... AG-15 - 37
  - Auxiliary "Stop-Engine" Lamp ..... AG-15 - 37
  - Secondary Analog Throttle Potentiometer Connector ..... AG-15 - 38

Making Your Own Engine / ECU Wiring Harness ..... AG-15 - 39

Reference Information ..... AG-15 - 40

Katolight Service - Master Repair Manual - Page 2950

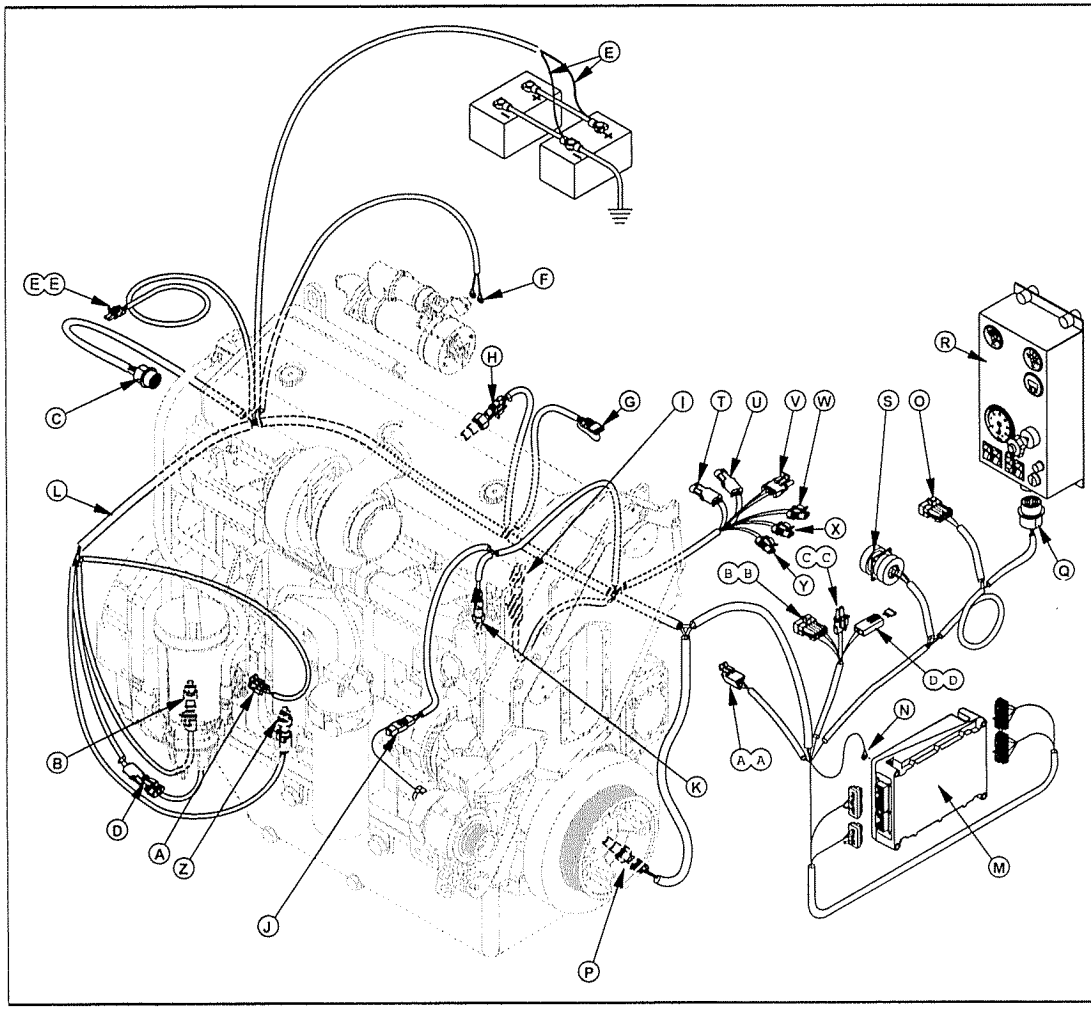

A- FUEL PRESSURE SENSOR
B- FUEL TEMPERATURE SENSOR
C- UNIT INJECTION CONNECTOR
D- WATER IN FUEL SWITCH
E- POWER AND GROUND CONNECTIONS
F- STARTER RELAY CONNECTIONS
G- MANIFOLD AIR PRESSURE (MAP) SENSOR
H- CAM POSITION SENSOR
I- MANIFOLD AIR TEMPERATURE (MAT) SENSOR
(NOT USED ON "A" ENGINES)
J- ALTERNATOR
K- COOLANT TEMPERATURE SENSOR
L- ENGINE WIRE HARNESS
M- ENGINE CONTROL UNIT
N- SYSTEM GROUND
(ECU MUST ALSO BE GROUNDED TO FRAME)
O- CRUISE CONTROL CONNECTOR
P- CRANKSHAFT POSITION SENSOR
Q- INSTRUMENT PANEL CONNECTOR
R- OPTIONAL INSTRUMENT PANEL
S- DIAGNOSTIC CONNECTOR
T- AUXILIARY "WARNING" LAMP CONNECTOR
U- AUXILIARY "STOP ENGINE" LAMP CONNECTOR
V- SECONDARY ANALOG THROTTLE
W- LOW COOLANT LEVEL SWITCH CONNECTOR
X- EXTERNAL DERATE SWITCH CONNECTOR
Y- EXTERNAL ENGINE SHUT DOWN SWITCH CONNECTOR
Z- OIL PRESSURE SENSOR
AA- SAE 1939 CAN CONNECTOR
BB- PERFORMANCE PROGRAM CONNECTOR
CC- TRANSIENT VOLTAGE PROTECTION (TVP) CONNECTOR
DD- MAIN SYSTEM FUSE (30 AMP)
EE- AIR CLEANER RESTRICTION SWITCH CONNECTOR

Figure AG-15 - 01, John Deere Electronic Control System (12.5 L)

Katolight Service - Master Repair Manual - Page 2951

INTRODUCTION

The John Deere Electronic Control system used on 12.5L engines is very similar to the systems used on 6.8L and 8.1L engines. It is designed to use the same RE162429 instrument panel with adjustable 2-state throttle used on all 6.8L and 8.1L engines with JDEC controls.

The power connections and 21-pin instrumentation and controls connector are exactly the same as used on the 6.8L and 8.1L engines. Unlike the 6.8L and 8.1L, there are no unterminated wires. Additional wires for special features such as cruise control are located in several special connectors.

FEATURES

Engine Diagnostics and Engine Protection

The ECU can detect abnormal engine operating conditions or faults in several engine systems. Faults are stored in the ECU for later use by service personnel, and are reported to the operator with a Fault Lamp.

The ECU can detect several types of engine problems and may take actions to minimize engine damage that may result if these problems are not corrected. There are two levels of engine problems, "Warning" and "Shutdown."

"Warning" faults are engine problems that may lead to engine failures if not corrected. "Warning" faults include higher-than-normal fuel temperature, lower-than-normal oil pressure, higher-than-normal coolant temperatures, higher-than-normal charge air temperatures, or power derates. The warning lamp will be on when a "Warning" problem is detected.

"Shutdown" faults are engine problems that indicate imminent engine failure. "Shutdown" problems include extremely low oil pressure, extremely high coolant temperatures, loss of coolant, and extremely high fuel temperature. The stop-engine lamp indicates "Shutdown" problems.

ENGINE PROTECTION

Three levels of engine protection are available: No protection, engine protection without shutdown, and engine protection with shutdown.

You must select the level of protection desired by option code when the engine is ordered. All levels may not be offered at every power rating. See the 1600 group descriptions and Engine Performance Curves to determine which injection pump / ECU options include engine protection or shutdown features.

No Protection

Engine ECU's with "No Protection" do not derate the engine when coolant temperature, oil pressure, or charge-air temperature "Warning" faults are detected, and do not shutdown the engine if a "Shutdown" fault occurs. The fault lamp will illuminate when a "Warning" fault is detected by the ECU, and the stop-engine lamp will illuminate when a "Shutdown" fault is detected. The engine operator is responsible for reducing engine speed and power when a "Warning" fault exists and for shutting down the engine when a "Shutdown" fault exists.

Katolight Service - Master Repair Manual - Page 2952

Katolight Service - Master Repair Manual - Page 2953

Engine Protection Without Shutdown

The Engine Protection feature is only in ECU's with Engine Protection programmed into the ECU. All engine protection sensors including fuel temperature, coolant temperature, and oil pressure must be installed if engine protection is specified. Otherwise, a fault will be detected, and the fault lamp will light.

The engine derate schedules will be active but the engine will not shutdown if a "Shutdown" fault is detected. The warning lamp will be on when a "Warning" fault is detected by the ECU or when the engine is derated by the ECU. The stop-engine lamp will illuminate when a "Shutdown" fault is detected. The engine operator is responsible for shutting down an engine with a "Shutdown" fault.

Engine Protection With Shutdown

The Engine Shutdown feature is only in ECU's with Engine Protection and Shutdown programmed into the ECU. All engine protection sensors, including coolant temperature and oil pressure must be installed if engine protection is specified. Otherwise, a fault will be detected, and the fault lamp will illuminate.

The engine derate schedules will be active and the engine will shutdown in 30 seconds if a "Shutdown" fault is detected. The warning lamp will illuminate when a "Warning" fault is detected by the ECU or when the engine is derated by the ECU. The stop-engine lamp will illuminate for 30 seconds before shutting down when a "Shutdown" fault is detected.

Shutdown Override Control

The operator may delay a shutdown for 30 seconds by pushing the "Shutdown Override" button. The "Shutdown Override" switch resets the shutdown timer to 30 seconds, and may be used repeatedly. However, continuously holding down the "Shutdown Override" switch will not reset the 30 second timer.

On an ECU with the Shutdown feature, shutting down the engine by turning "off" the key switch will reset the engine Shutdown feature and will allow at least 30 seconds of running after restart. After 30 seconds, the engine will again shutdown unless the "Shutdown" fault condition has cleared

LOW OIL PRESSURE

There are two low oil protection features, Low Oil Pressure WARNING and Low Oil Pressure SHUTDOWN. The set-points for Low Oil Pressure WARNING and SHUTDOWN are variable based on engine speed, and are preset at the factory.

At the Low Oil Pressure WARNING set-point the ECU turns on the warning lamp. On systems with the protection option enabled a slow power derate begins. If the oil pressure goes above the Low Oil Pressure WARNING set point, power slowly increases until the power is back to full power. The fault lamp will continue until the power returns to normal even if the fault condition has gone away and the recovery is in process.

At Low Oil Pressure SHUTDOWN set-point the ECU turns on a stop-engine lamp. On systems with the protection option enabled, a faster power derate begins. On systems with the shutdown option enabled, if the oil pressure does not go above the SHUTDOWN set-point within 30 seconds, the engine will shutdown. If oil pressure goes above Low Oil Pressure SHUTDOWN set point within 30 seconds, power derate reverts to the Low Oil Pressure WARNING curve.

COOLANT TEMPERATURE

There are two standard coolant temperature features, High Coolant Temperature WARNING, and High Coolant Temperature SHUTDOWN.

At the High Coolant Temperature WARNING set-point the ECU turns on the warning lamp. On systems with the protection option enabled a slow power derate begins. If the coolant temperature goes below the High Coolant Temperature WARNING set point, power increases slowly until the power is back to full power. The fault lamp will continue until the power returns to normal even if the fault condition has gone away and the recovery is in process.

At High Coolant Temperature SHUTDOWN set-point the ECU turns on the stop-engine lamp. On systems with the protection option enabled a faster power derate begins. On systems with the shutdown option enabled, if the coolant temperature does not go below the SHUTDOWN set-point within 30 seconds, the engine will shutdown. If coolant temperature goes below High Coolant Temperature SHUTDOWN set point within 30 seconds, power derate reverts to the High Coolant Temperature WARNING curve.

Katolight Service - Master Repair Manual - Page 2954

WATER IN FUEL

If the water-in-fuel sensor detects the presence of water in the primary fuel filter, a fault code will be generated and the warning light illuminates. On systems with the protection option enabled, a slow power derate begins. The operator has approximately one hour to stop the engine, drain the water from the primary fuel filter, and find and correct the source of the water. If water is still present in the primary fuel filter after one hour, the "Stop Engine" light will illuminate. On systems with the shutdown option enabled, the engine will shut down 30 seconds after the "Stop Engine" light illuminates.

HIGH CHARGE AIR TEMPERATURE

If the air temperature in the intake manifold rises above the maximum allowable temperature, the ECU turns on the warning lamp and generates a fault code. On systems with the protection option enabled, a slow power derate begins. If the temperature drops below the allowable maximum while derated, power slowly increases until the power is back to full power. The fault lamp will continue until the power returns to normal even if the fault condition has gone away and the recovery is in process. There is no shutdown function for High Charge Air Temperature. The maximum derate is 20%.

HIGH FUEL TEMPERATURE

If the fuel temperature rises above a preset "warning" temperature, the ECU illuminates the warning lamp, generates a fault code, and begins to derate. There is no shutdown function for high fuel temperature.

EXTERNAL LOSS OF COOLANT INPUT

The Loss of Coolant feature is an optional customer input. The loss-of-coolant circuit can be used to trigger a derate and shutdown from an external low-coolant indicator such as a Murphy coolant level switch. When a loss-of-coolant signal is detected, the ECU turns on the stop-engine lamp. On systems with the protection option enabled a rapid power derate begins. On systems with the shutdown option enabled, if the Loss-of-Coolant switch does not reset within 30 seconds, the engine will shutdown. If the Loss-of-Coolant switch resets within 30 seconds, power increases at the same rate until back to full power.

The engine will continue to run for 30 second after the external low coolant sensor is triggered. If an immediate shutdown is required, a separate external shutdown circuit is provided.

EXTERNAL DERATE AND SHUTDOWN INPUTS

Two additional inputs are provided for external derates and shutdown. These inputs can be used to allow the OEM to trigger a 20% reduction in engine power or an engine shutdown from external switches, such as a loss-of-prime switch or hydraulic over-temperature switch. These switches are active on all ECUs, even if "No Protection" is specified. They derate or shut down the engine immediately. There is no 30 second delay. If the user doesn't wish to use this feature, the wires should be left disconnected.

ONBOARD DIAGNOSTIC GAUGE REQUIREMENT

All applications using a 12.5L engine with JDEC control system must be equipped with a permanent onboard diagnostic gauge. The RE68155 Diagnostic Gauge is available either separately or as part of the RE162429 instrument panel for this purpose.

The RE68155 Diagnostic Gauge is a complete on-board engine diagnostic and display system. It includes built-in "Warning" and "Stop-engine" lights to alert the operator of problems, and it digitally displays diagnostic codes, rpm, hours, oil pressure, coolant temperature, voltage, engine load, fuel consumption, manifold temperature and other engine parameters.

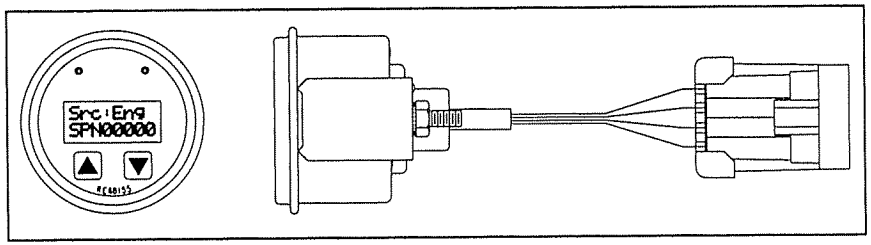

Figure AG-15 - 02, RE68155 Diagnostic Gauge

It can also be used to drive analog gauge displays for rpm, oil pressure, coolant temperature, and many other parameters available on the digital display. The RE68155 diagnostic gauge works with all JDEC control systems. It fits in a standard 2-inch SAE instrument panel opening. It is pre-installed in the RE162429 instrument panel, and included with the RE508625 instrument panel kit.

You can also provide your own SAE J1939-based on-board diagnostic system using the information provided over the SAE J1939 Controller Area Network (CAN) described later in this manual.

Katolight Service - Master Repair Manual - Page 2955

Power Bulge Protection

It will not be possible to operate engines continuously at higher than 102% power by keeping in the "Power Bulge" zone of the torque curve. Operation above 102% load will only be allowed for a maximum of 1 minute out of every 10 minutes. After 1 minute of operation at greater than 102% power within a 10 minute time interval, the ECU will automatically derate the engine to no more than 102% of rated power as shown on the "Minimal Power Bulge" portion of the published performance curve. The derate will take about one minute, and will stay in effect until the 10 minute time interval is complete, at which time power bulge operation will be allowed again for up to one minute during the next 10 minute time interval.

Fuel Temperature Compensation

Fuel temperature compensation provides constant power regardless of fuel temperature

Throttle Options

Three throttle inputs are available on the 12.5L engine. There are two analog (potentiometer) throttles, and a special adjustable 2-state throttle. Any of the three inputs can be used alone or in any combination with the other two.

ANALOG (POTENTIOMETER) THROTTLES

The two available analog throttle inputs both can use any 2000-15,000 Ohm potentiometer. Many prefabricated foot and hand throttle assemblies are available from various suppliers including Morse and Williams Controls. When both analog throttles are used, the throttle signals are additive, up to the factory preset fast-idle setting or the maximum speed set with the Adjustable 2-State Throttle. There will be no "dead band" in either throttle. When you move the foot throttle, speed will immediately increase regardless of where the hand throttle is set.

The secondary analog throttle feature is not intended for use with two throttles located remotely from each other. Because the throttle signal is additive, if either throttle is at the full speed position, the other throttle will have no control. Both throttles must be in the slow-idle position for the engine to operate at slow idle.

ADJUSTABLE 2-STATE THROTTLE

An adjustable 2-state throttle feature is available on the 12.5L JDEC System. No mechanical or analog (potentiometer) throttle is required to operate the engine. The Adjustable 2-State throttle allows you to preset one high and one low operating speed, and switch between them electrically without the use of potentiometers or mechanical adjustments of any kind.

If an analog (foot or hand) throttle is desired, you can add up to two throttle potentiometers that would operate between the preset high and low operating speeds. The Adjustable 2-State throttle must be set in the "Low-Speed" position for the Analog throttle to work.

Three switches make up the Adjustable 2-State Throttle: The High/Low Select Switch, the Bump Enable Switch, and the Speed Select Switch.

The High/Low Select Switch

The High/Low Select Switch allows you to choose between two operating speeds. Unless you adjust the speed points differently, the engine will operate at the factory pre-set fast idle speed when the High/Low Select Switch is in the "Fast" position, and it will operate at the factory pre-set slow idle speed when the High/Low Select Switch is in the "Slow" position. However, the preset "Fast" and "Slow" operating speeds may be reset to any desired speeds between factory fast and slow idles using the Speed Select and Bump Enable switches.

The Bump Enable Switch

The Bump Enable Switch serves as a lock for the Speed Select Switch to make sure the operating speed is not changed accidentally or as a result of the Speed Select circuit failure. The Bump Enable Switch must be "On" for the Speed Select Switch to work.

The Speed Select Switch

The Speed Select Switch allows you to adjust either the "Fast" or "Slow" preset speeds. When the High/Low Select Switch is on "High," and the Bump Enable Switch is "On," moving the Speed Select Switch to the "-" (minus) position will decrease the pre-selected "Fast" speed slightly, and moving the Speed Select Switch to the "+" (plus) position will increase the pre-selected "Fast" speed slightly (but not past fast idle). When the High/Low Select Switch is on "Low", and the Bump Enable Switch is "On," moving the Speed Select Switch will adjust the "Slow" pre-set operating speed.

The Speed Select Switch works like the "Accel" and "Coast" buttons on a cruise control. A momentary tap on the switch will bump the speed up or down about 10 rpm. However, if you hold the switch down, speed will continue to ramp up or down continuously until the switch is released, then it will lock in at whatever rpm it has reached at that point.

To permanently set high and low speeds, press the bump enable button (3) three times after adjustment. Both preset speeds (high and low) will be remembered, even if the ignition is turned off or the battery is disconnected.

Cruise Control

The Cruise Control is an off-road type that maintains a constant engine RPM under varying load conditions. An automotive type cruise control maintains a constant road speed.

The Cruise Cancel/Resume function is a one-button, Cancel-then-Resume function. The first time button contact is made with Cruise Control active, the Cruise Control will disengage and the engine speed will drop to idle. If the contact is made again within one minute and with the engine speed above 1300 RPM, the Cruise Control will "Resume." This feature allows the placement of the Cancel/Resume button in a convenient location in the vehicle cab and does not require the use of the normal Cruise controls for momentary interruptions in cruise operation.

The Cancel/Resume function is intended for applications like Ag tractors and sprayers that turn around at the end of each row in a field. This allows the operator to use the throttle and/or brake to turn the vehicle around. When ready to resume field operations, the operator brings the engine speed above 1300 RPM and activates the Cancel/Resume function again to resume cruise speed. An internal timer gives the operator one minute to complete the turnaround maneuver.

The Cruise Control has the normal functions of:

Cruise Control power "ON" or "OFF"
"Set" or "Bump Up" Engine Speed
"Resume" or "Bump Down" Engine Speed
Vehicle brake or clutch pedal to disengage Cruise Control

These feature generally function exactly like an automotive cruise control. Refer to the cruise control wiring instructions later in this section for more details.

The engine speed can be set from two different locations. The primary location is normally in the cab of the vehicle and is used to set a constant engine speed while the vehicle is driven. The secondary cruise control is normally used in a location that provides for engine PTO speed control and is used with the engine in "neutral" or out of gear. Both locations can have the normal Cruise functions.

Selectable Torque Curves and Governor Regulation

The New John Deere ECU can have up to four programmed torque curves. The power levels for each curve are identified in the engine performance curves. The governor can be set for either normal droop or isochronous operation. Normal droop gives a drop in engine speed with an increase in load, or an increase in engine speed with a decrease in load. The normal % droop for your engine is listed in the engine performance curve. When isochronous governing is selected the droop is set to 0%, and there is no change in engine speed with changing loads until the engine's torque limit is reached.

Katolight Service - Master Repair Manual - Page 2956

PERFORMANCE PROGRAM CONNECTOR

The ECU can be programmed with multiple power and governor curves. Refer to the specific Engine Performance Curve for your engine to determine what variations are available to you. To switch between the available power and speed regulation curves, insert jumper wires between certain terminals in the wiring harness.

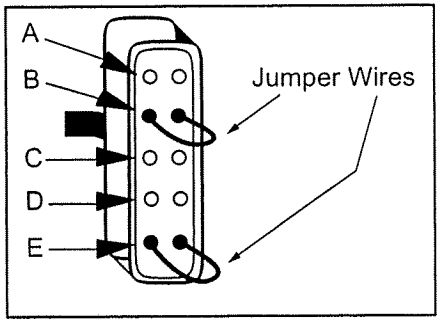

Figure AG-15 - 03, Performance Program Connector

On the engine wiring harness you will find a 10-pin Metri-Pack connector that is capped off and not plugged into anything. This is the Performance Program Connector. To change programming, add and/or remove jumper wires from one or more of the five adjacent pairs of terminals.

Three RE500927 jumper wires are included with each engine. Additional jumper wires can be made with an R65594 Metri-Pack crimping tool (Packard # 6285847), and the following parts:

1 - 18-Gauge GXL Wire, 4 inches long (25 mm)
2 - R104846 Terminals (Packard #12048074)
2 - 57M7258 Seals (Packard #12048086)

Jumpers can be inserted into the connector by hand. However, once installed, they cannot be removed by hand. A special tool (Packard #12094429) is required to remove the connector, or the wire can simply be cut and taped off.

The Performance Program Connector is programmed as follows:

ECU Function	Pins				
	A	B	C	D	E
Intermittent Power, Curve #1	No Jumper Wire	No Jumper Wire	Not Used*	Not Used*	
Continuous Power, Curve #2	**Jumper Wire Installed**	No Jumper Wire	Not Used*	Not Used*	
Intermittent Derate Power, Curve #3	No Jumper Wire	**Jumper Wire Installed**	Not Used*	Not Used*	
Continuous Derate Power, Curve #4	**Jumper Wire Installed**	**Jumper Wire Installed**	Not Used*	Not Used*	
Standard Droop Governor			Not Used*	Not Used*	No Jumper Wire
Isochronous Governor (See gen-set setting notes below.)			Not Used*	Not Used*	**Jumper Wire Installed**

* Locations "C" and "D" are not used at this time. No jumpers should be installed.

Table AG-15 - 01, Performance Program Connector Programming

GOVERNOR SETTINGS FOR GEN-SETS

Isochronus Governing

Most gen-sets are normally operated with the isochronus governor selected. Isochronus governing is intended for use with either stand-alone gen-sets, or gen-sets that are paralleled using a commercial load sharing module.

For stand-alone gen-sets, either prime or standby, the throttle switch can be left in the fast-idle position and/or the analog (adjustable) throttle should be turned all the way up to the max speed position. With the throttle in the fast idle position, the governor will try to maintain exactly 1800 rpm (or 1500 rpm for 50-Hz units).

The isochronus governor programmed into gen-set ECUs is non-linear. It does not increase speed evenly as the throttle is turned up. For an 1800 rpm gen-set, it follows the curve shown below.

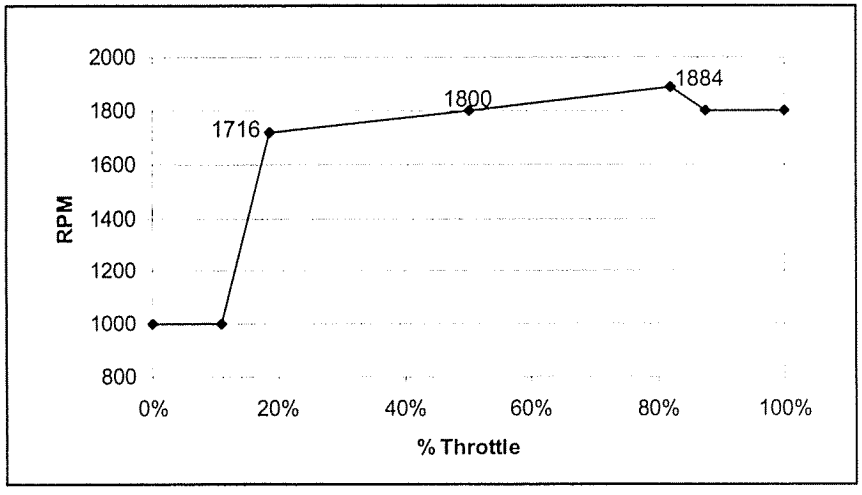

Figure AG-15 - 04, Isochronous Governor

The 1500 rpm ECU behaves similarly. Most of the throttle travel is used to adjust speed within plus or minus 84 rpm of rated speed. This allows very fine adjustment of speed in that range if needed, and it meets the requirements of commercially available load sharing modules. If throttle travel exceeds 82%, speed will reduce until it reaches rated speed at 87.5% travel. Because of this feature, the gen-set will operate at rated speed (1800 or 1500 rpm) when the throttle switch is in the "fast idle" position, or if the analog throttle is turned all the way up, or in the event of a throttle wiring failure, or if no analog or 2-state throttle is installed.

This isochronus governor can be used directly with commercially available load sharing modules. When two or more engines are being controlled by a load sharing module, the load sharing module output can be connected directly to the analog throttle input to the ECU, as shown in the analog throttle wiring section later in this document.

Standard Droop Governing

Standard droop governing is intended for use when sharing load between two John Deere electronically controlled engines without the aid of a commercial load sharing module.

With a gen-set engine in standard droop mode and the throttle control at fast idle, the engine will operate with breakaway at exactly 1800 rpm as shown below (or 1500 rpm on 50 Hz units). Fast idle speed will be 20-60 rpm above rated speed, depending on governor droop for your particular engine. Governor droop for each engine is listed on the certified performance curve.

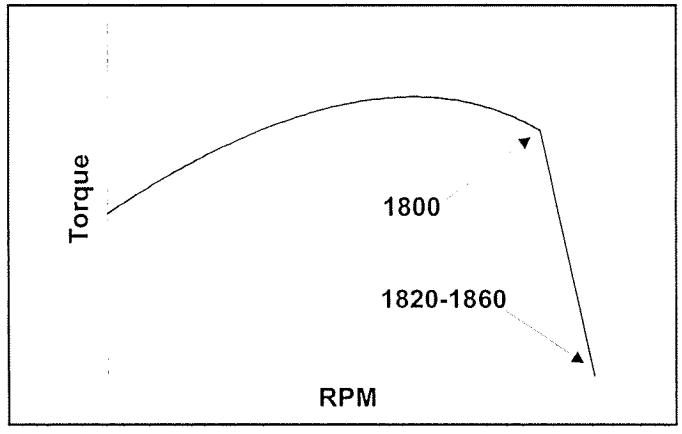

Figure AG-15 - 05, Standard Droop Governor

Multiple John Deere engines with JDEC controls operated in this mode and wired directly in parallel will automatically share load, although frequency will vary with load. This mode is intended for use with other electronically controlled John Deere engines in the same operating mode. It is not intended to be used to parallel with other models of engines, or to parallel with the utility grid directly. To share load at exactly 1800 rpm (60 Hz), a commercial load sharing module must be used.

Katolight Service - Master Repair Manual - Page 2958

Katolight Service - Master Repair Manual - Page 2959

Controller Area Network (CAN)

The CAN buss is a high speed open interconnect network for electronic systems on on-highway and off-road vehicles and stationary equipment. It allows electronic systems to communicate with each other through a standard architecture of electronic signals over shielded twisted-pair wires. Engines can communicate with throttles, transmissions and brakes. Vehicles can communicate with trailers. Agricultural and construction equipment can communicate with implements and accessories. Stationary equipment can communicate with controllers or other networked equipment. Information on the network can be displayed to the operator on a virtual terminal (instrument panel) or relayed to another location via telemetry. Up to 30 Electronic Control Units or modules can be connected together through a single CAN network segment.

A CAN connection (SAE J1939) is provided in two different locations on the engine wiring harness. A round Deutsch 9-pin connector is provided primarily for service/diagnostic purposes. A Deutsch 3-pin wedge connector, intended for customer computer interface, has also been provided.

The pins in the Deutsch connectors are:

Deutsch 9-pin Round Connector Pin	**Function**
Pin A, Wire #050E (black)	Ground
Pin B, Wire #012C (red)	Power Supply (+12 or +24 volts)
Pin C, Wire #904D (yellow)	CAN_H
Pin D, Wire #905D (dark green)	CAN_L
Pin E, Wire #020D (black)	Shield
Pins F through J	Spare (unused)

Deutsch 3-pin Wedge Connector Pin	**Function**
Pin A, Wire #904A (yellow)	CAN_H
Pin B, Wire #905A (dark green)	CAN_L
Pin C, Wire #020A (black)	Shield

The CAN buss is also accessable through the 21-pin instrumentation and controls connector, which is described in the Instrumentation and Controls Wiring section.

Standard CAN buss messages are listed in the Component Technical Manual. Special CAN messages are required for use with electronically controlled Allison transmissions.

For details on how to use this system, refer to SAE J1939/11 published by the Society of Automotive Engineers, 400 Commonwealth Drive, Warrendale PA 15097-0001.

BASIC INSTALLATION

ECU Mounting Requirements

The ECU is enclosed in a "wedge box" style enclosure. The wiring harness is mated to the ECU connector with 4 jackscrews. The recommended torque on the jackscrews is 0.8 to 1.5 NM.

An engine-mounted or remote-mounted ECU can be specified. For an engine-mounted ECU, all mounting hardware will be provided. A remote-mount ECU is normally mounted within the operator compartment or on the operator platform. It should be mounted securely with the four corner mounting holes in a vertical plane with the mating connectors pointing downward. This orientation provides maximum moisture resistance. Other acceptable mounting orientations are shown below. All wiring harnesses must be routed downward from the ECU enclosure so that moisture cannot drain into the connector. A "drip loop" is required when the harness is to be routed above the ECU enclosure.

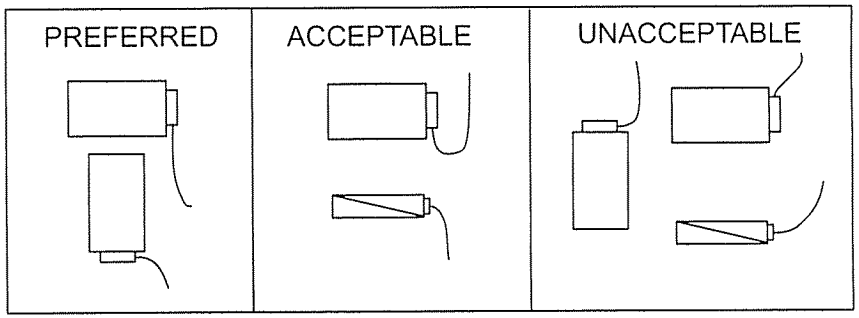

Figure AG-15 - 06, ECU Mounting Position

The ECU is not intended to be mounted in a location that is subject to severe vibration or high shock loading.

The ECU case must be grounded to the chassis to protect against electrostatic discharge. The strap can be as small as 12 gage (primarily for mechanical strength reasons). This is in addition to the ECU ground connection point on the engine/ECU wiring harness.

The engine/ECU wiring harness should be routed to provide access to the diagnostic connectors for service diagnostic work.

Engine Mounted ECU Environment

Special high temperature ECUs are used for engine mounted ECU options. For engine mounted ECUs, the air temperature at the ECU should not exceed 105 °C (221 °F). If the ECU is engine-mounted, it must be in the factory location on the lower right side of the engine, and the engine must be fan cooled. For applications cooled with a heat exchanger, the ECU must be mounted remotely, in the shade, and outside of the engine compartment or any other area where it is exposed to heat from other components. ECUs intended for remote mounting must not be mounted in the engine compartment.

Remote Mounted ECU Environment

For remote (chassis) mounted ECUs, the air temperature at the ECU should not exceed 73 °C (163 °F). Remote mounted ECUs should be mounted in or near the operator's station where environmental conditions are best. For applications cooled with a heat exchanger, the ECU must be mounted remotely, in the shade, and outside of the engine compartment or any other area where it is exposed to heat from other components.

Never cut or splice into the ECU wiring harnesses. Do not wire any other loads into the ECU wiring harnesses.

All wiring must be installed and routed to avoid sharp bends, kinking, pinching, cutting, rubbing or excessive pulling. Use cable clamps or wire ties as needed. Do not over tighten wire ties. Do not run screws through the wiring harnesses. Protective shields may be needed to protect the harnesses from road hazards, sharp surfaces, corrosive materials or excessive heat.

Welding Precautions

Welding causes high currents or electrostatic discharge in electronic components that can cause permanent damage to the ECU. We recommend that "No Welding" signs be prominently displayed on the vehicle chassis. The following steps should be used to protect from damage when welding on the vehicle chassis:

1. Remove the ground connection from the ECU to the vehicle frame.
2. Disconnect the connectors from the ECU.
3. Connect the welder ground close to the welding point and be sure ECU or other electronic components are not in the ground path.

For applications that require routine or daily welding, (i.e., for bucket tooth resurfacing, etc.) contact Sales Engineering.

Katolight Service - Master Repair Manual - Page 2960

Power and Ground Connections

After all other wiring is completed, and immediately before operating the system for the first time, the main power and ground connections to the battery should be made. Unterminated system power and ground wires are provided in the engine wiring harness for this purpose. These wires should be connected directly to the battery if possible. The battery can be located up to 10 feet (3 M) from the engine. Connect as follows:

Battery Power (Wire #002C, red, 10 gauge) -
Should be connected directly to the positive terminal of the battery.

Ground (Wire #050G, black, 10 gauge) -
Should be connected directly to the negative terminal of the battery.

If a battery disconnect switch is used on the negative battery terminal, Wire #050E should be connected to the 'disconnectable' side of the switch, not the battery terminal.

The ECU case must also be grounded to the chassis separately to protect against electrostatic discharge. The strap can be as small as 12 gauge (primarily for mechanical strength reasons). This is in addition to the ECU ground connection wire on the engine wiring harness.

12-volt or 24-volt operation must be specified when ordering the engine. The engine ECU has the voltage requirements described in the following table.

12 Volts DC	24 Volts DC	Description
0 to 5.3 volts	0 to 10.6 volts	System does not operate - No ECU damage
5.3 to 9.0 volts	10.6 to 18.0 volts	Cranking Voltage Range - Some features "inactive"
9.0 to 16.0 volts	18.0 to 32.0 volts	Normal Operation - All features "active"
16.0 to 26.5 volts	32.0 to 36.0 volts	Over-voltage, ECU can operate for up to 5 minutes without damage - Some features "inactive"
>26.5 volts	>36.0 volts	ECU damage

Table AG-15 - 02, ECU Voltage Requirements

Katolight Service - Master Repair Manual - Page 2961

TRANSIENT VOLTAGE PROTECTION

There are two different Transient Voltage Protection (TVP) modules; 12 volt and 24 volt. The 12-volt TVP module protects the engine ECU from transient voltage spikes (such as alternator load dump) greater than 24 volts. The 24-volt TVP module protects against voltage spikes greater than 36 volts. The TVP module can be wrapped in the wiring harness or mounted in the vehicle. If the TVP module is mounted in the vehicle, it should be mounted vertically with the pigtail wires exiting form the bottom of the module. The mounting location should be away from battery fumes, engine heat and vibration, such as in a control cabinet, vehicle chassis, or cab. Mounting ears of the TVP module may not withstand overtightening of mounting bolts. The TVP module does not protect against sustained over-voltage to the ECU.

The TVP Module mates with the TVP Connector in the engine wiring harness. The TVP module is not always required. Some alternators have internal TVP protection. A TVP module will be provided if needed, depending on the alternator option specified. If you provide your own alternator, a TVP module must be used.

REVERSE CURRENT PROTECTION

The ECU has limited internal reverse current protection if the ECU power supply is connected in reverse. The ECU will not be damaged with reverse voltage up to 26.5 volts on a 12-volt system and 36.0 volts on a 24-volt system. Reverse current at higher voltages will damage the ECU.

Starter Relay

The standard engine wiring harness is designed for use with a starter relay located within 2 feet (600 mm) of the starter. Under no circumstances should the starter solenoid be operated directly from the key switch without a relay.

INSTRUMENTATION AND CONTROLS WIRING

To complete a runable engine, instrumentation and operator controls must be added. There are three ways to add basic instrumentation and operator controls to the system:

1. Use the John Deere RE162429 instrument panel.
2. Use the RE508625 instrumentation and wiring kit to build your own instrument panel
3. Design your own instrumentation and controls (without the RE508625 kit).

Using the RE162429 Instrument Panel

The easiest way to provide all the control system parts that do not come on the engine is to use the John Deere RE162429 instrument panel.

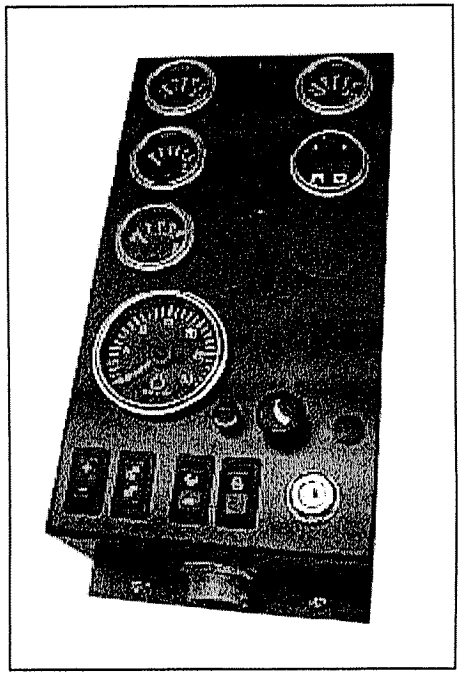

Figure AG-15 - 07, Instrument Panel, RE162429

Katolight Service - Master Repair Manual - Page 2962

The 21-pin Deutsch connector on the engine wiring harness plugs directly into the bottom of the RE162429 Instrument panel. To operate an engine with the RE162429 instrument panel, you need only install the engine wiring harness, connect the power and ground to the battery, plug the 21-pin Deutsch connector into the RE162429 Instrument Panel, and turn the key. The RE162429 panel operates on 12 or 24 volts.

The following features are standard on the RE162429 Instrument panel:

STANDARD INSTRUMENT PANEL FEATURES

- Ignition switch
- Panel mounted fuse
- Adjustable 2-state throttle switches
- Shutdown override button
- RE68155 Diagnostic Gauge
- Tachometer
- Oil pressure analog gauge
- Coolant temperature analog gauge.

The following optional features are available. To use the optional features, just order the parts and plug in. Connectors and panel cutouts are provided in the standard panel:

OPTIONAL INSTRUMENT PANEL FEATURES

• RE69667	Analog throttle potentiometer
• RE163436	Percent load gauge
• RE162422	12-volt voltage gauge
• RE163277	24-volt voltage gauge
• RE162427	Audible warning alarm
• RE162449	Backlight dimmer control
• RE162448	Converter for 24-volt backlighting
• RE506969	12-foot extension harness

Using the RE508625 Instrumentation and Wiring Kit

The second easiest way to provide all the control system parts that do not come on the engine is to use the John Deere RE508625 instrumentation and wiring kit.

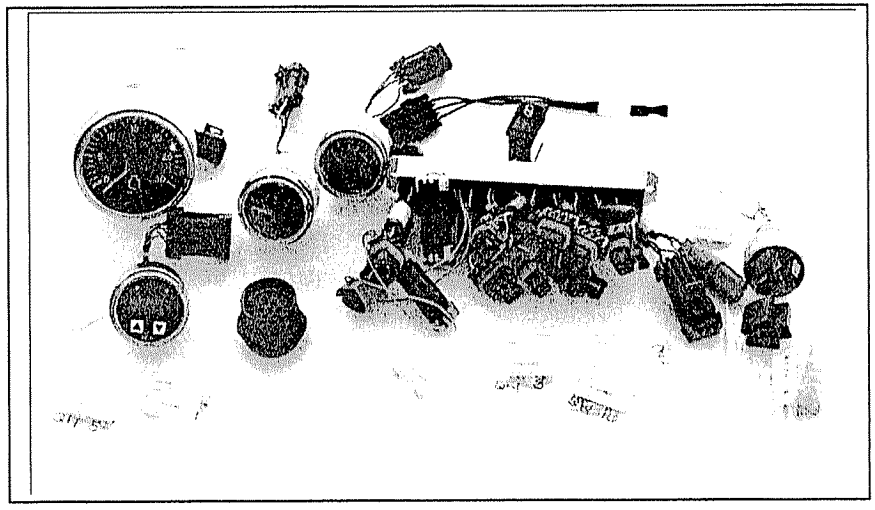

Figure AG-15 - 08, Instrumentation and Wiring Kit, RE508625

The RE508625 instrumentation and wiring kit includes all the parts that are included in the RE162429 instrument panel except for the adjustable 2-state throttle switches, which can be added by purchasing a separate RE508626 switch kit. The RE508625 kit includes ignition switch, shutdown override switch, all needed wiring connectors, and the RE162450 Databus Module which can be used to add up to three additional auxiliary gauge displays (in addition to the included tach, coolant temp, and oil pressure gauges). All you need to add is the actual wires and a throttle control.

All optional features of the RE162429 panel also apply to the RE508625 instrumentation kit.

Katolight Service - Master Repair Manual - Page 2963

Making Your Own Instrumentation and Controls

If you choose not to use the RE162429 instrument panel or the RE508625 instrumentation kit, you will have to provide your own ignition switch, fuse holder, throttle device, wiring harness, diagnostics, and any other instrumentation and controls you need.

All required electrical connections to the engine, including throttle, instrumentation, key switch, starter, and alternator connections, are made through a single 21-pin Deutsch connector provided on the engine wiring harness. Several special connectors are provided for optional features.

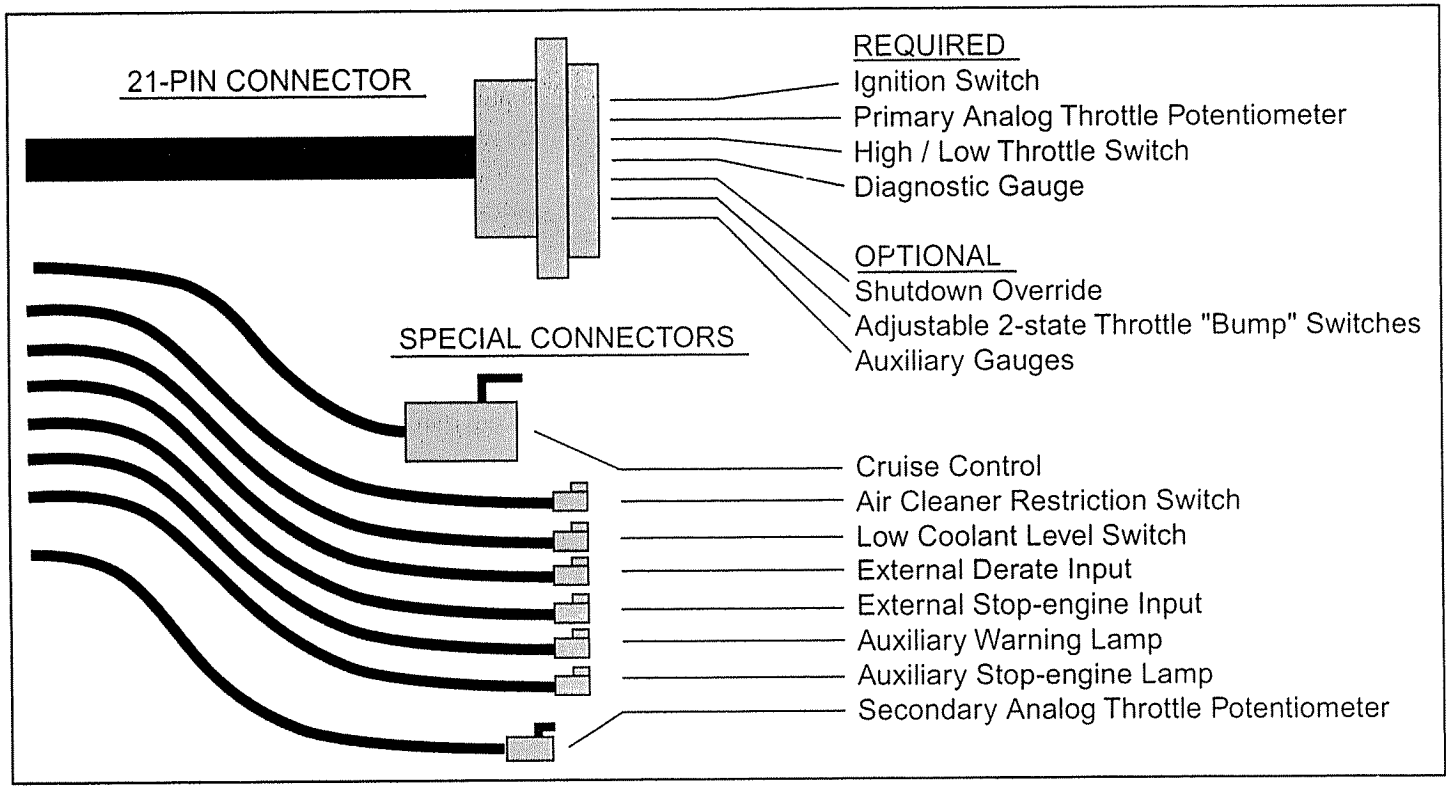

Figure AG-15 - 09, Instrumentation Connections

Katolight Service - Master Repair Manual - Page 2964

Katolight Service - Master Repair Manual - Page 2965

MINIMUM REQUIRED WIRING

All required wiring attachments can be made through the 21-pin instrumentation and controls connector. Some kind of ignition switch is always required. Diagnostics are also required. For 8.1L and 12.5L engines, you must install the RE68155 Diagnostic Gauge or equivalent CAN-based instrumentation. The RE68155 Diagnostic Gauge is not strictly required on 4.5L and 6.8L engines because they are also equipped with blink-code diagnostics. However, it is still highly recommended because it is the easiest way to meet all diagnostic and wiring requirements. If you do not use the RE68155 Diagnostic Gauge on 4.5L and 6.8L engines, you must provide a warning lamp, stop-engine lamp, hourmeter, and other desired instrumentation such as tachometer, oil pressure gauge, and coolant temperature gauge separately.

For gen-set applications that start and operate at full rated speed only (1500 or 1800 rpm), it is not necessary to connect anything except the key switch and diagnostics.

For industrial applications, the analog throttle circuit must also be completed. If you choose to operate without an analog (potentiometer) throttle, you still must install a resister bridge to terminate the circuit. The high/low speed select switch must also be connected on all industrial (non-gen-set) ECUs. If you choose not to use the high/low select feature, this circuit can be easily terminated with a single resister.

For details on wiring all required and optional circuits, refer to the following sections.

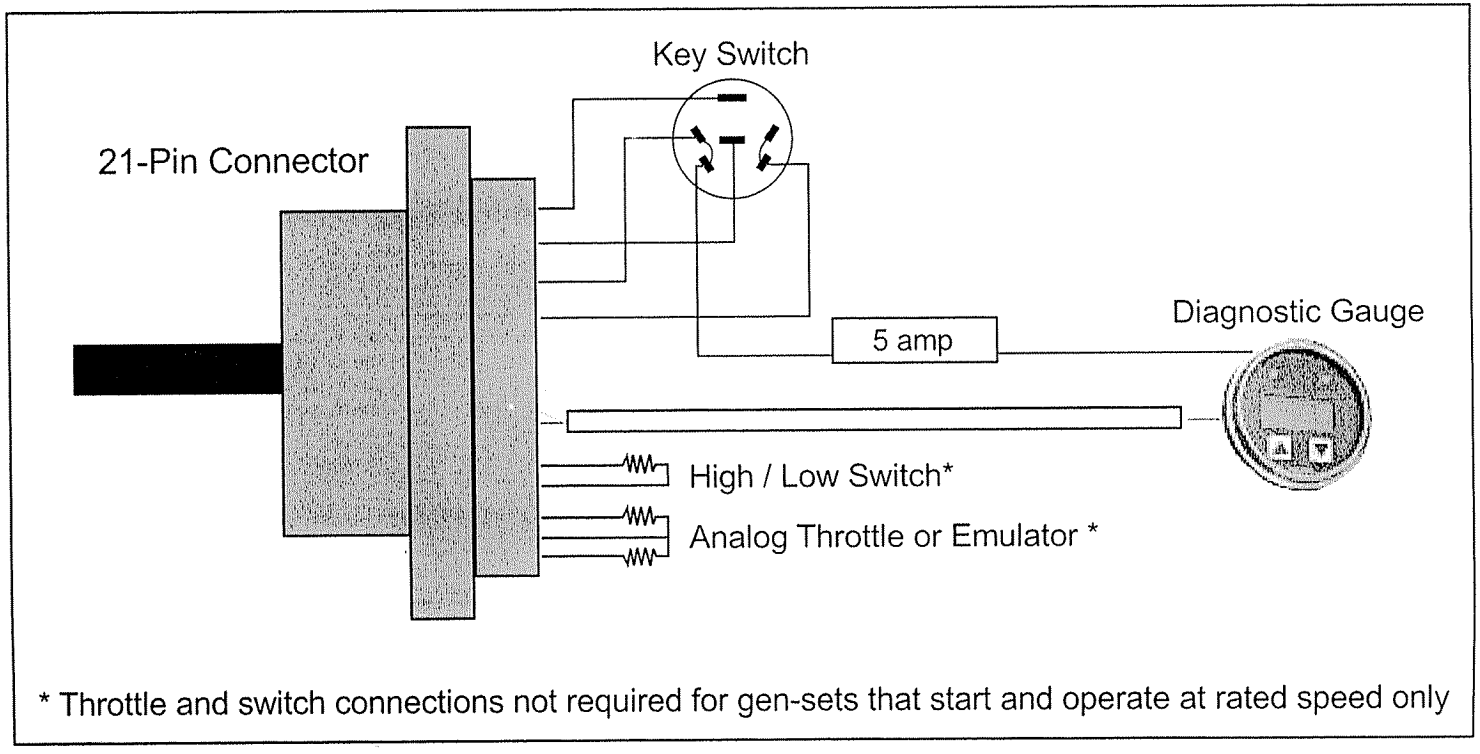

Figure AG-15 - 10, Minimum Required Wiring

Katolight Service - Master Repair Manual - Page 2966

BASIC INSTRUMENTATION AND CONTROLS HARNESS

For all required connections, and for the more common optional connections that are made through the 21-pin connector, refer to the following wiring diagram. This diagram provided a complete wiring harness to interface the 21-pin connector with your instrument panel. The connectors shown fit the recommended John Deere gauges, switches, etc. listed. If you choose to use other components, different connectors may be required.

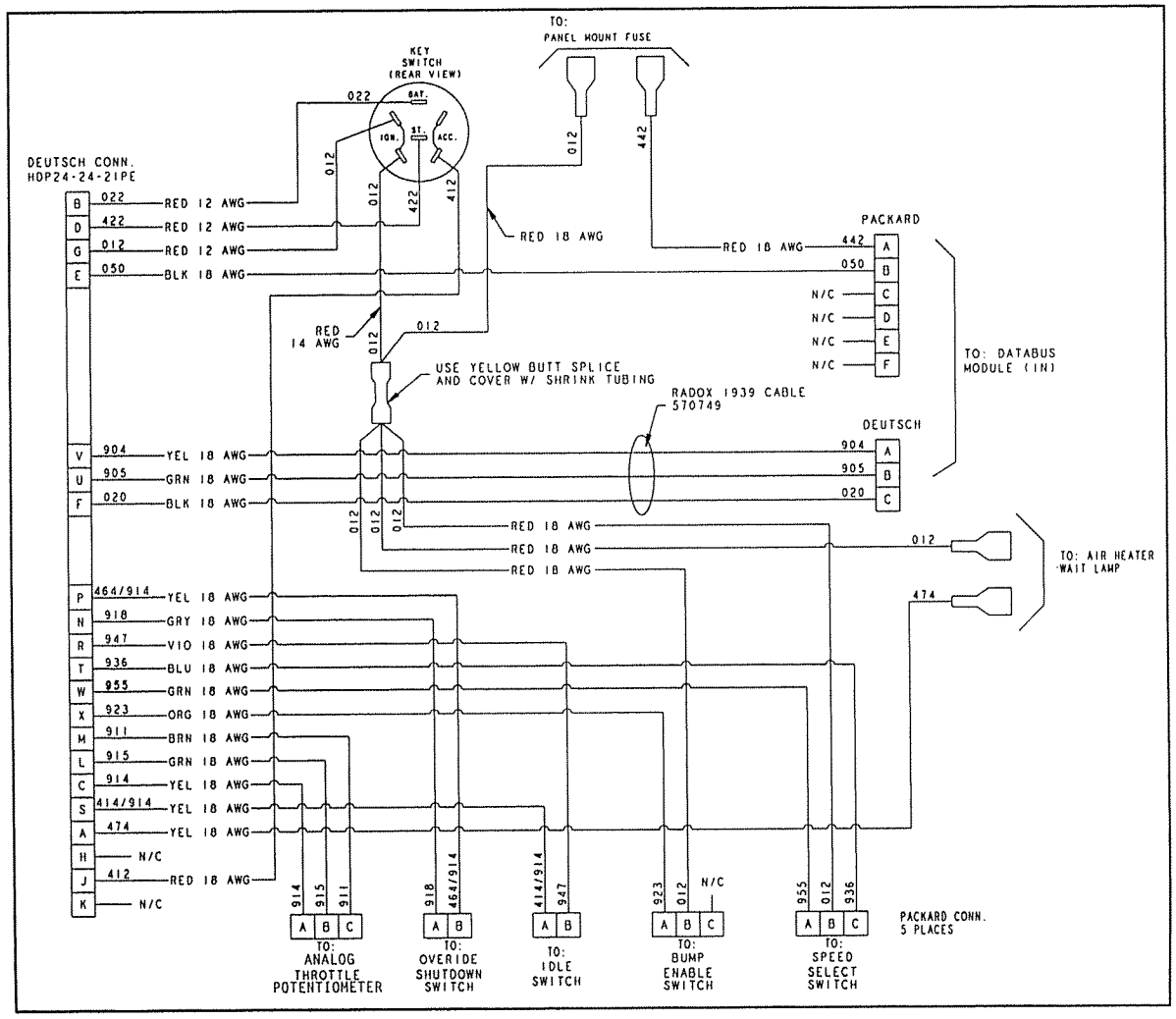

Figure AG-15 - 11, Instrumentation and Controls Connections

Refer to the following sections for details on each connector.

21-Pin Deutsch Instrument Panel Connector

The 21-pin Deutsch connector makes the main connection between the engine and your instrumentation and controls. The RE508625 instrumentation and wiring kit includes this connector. If you provide your own harness, you will have to provide this connector with pin assignments per the following chart. Use (1) 57M7748 Connector (Deutsch HDP24-24-21PE), (5) R78068 12-ga to 14-ga pins (Deutsch 0460-204-12141), (16) R78066 16-ga to 18-ga pins (Deutsch 0460-202-16141), and (3) R78069 plugs (Deutsch 114017).

Instrument Panel Connector Pin Assignments

Pin	Wire	Description	Used On
A	NA	NA	This pin is not currently used.
B	022C	Battery power	To "B" terminal of your ignition switch
C	914B	Sensor return	To the primary analog throttle potentiometer or emulator
D	422	Starter relay	To "Start" terminal on your ignition switch
E	050D	Ground	Grounded on engine side to the battery and ECU. Use for any non-sensor ground (lights, gauge power, etc)
F	020F	CAN shield	To any CAN connectors including the diagnostic gauge
G	012B	Battery power to ECU (switched)	Must be wired to the "Ignition" terminal of key switch
H	N/A	N/A	This pin is not currently used
J	412	Alternator ignition	Must be wired to the "Accessory" terminal of a two-pole ignition switch.
K	N/A	N/A	This pin is not currently used
L	915	Primary analog throttle input voltage	To center (sensing) terminal of the primary analog throttle potentiometer (or throttle emulator)
M	911B	+5 Volts (sensor power)	To the throttle potentiometer
N	918	Shutdown override return	To shutdown override switch
P	464B	Shutdown override	To shutdown override switch
R	947	High/Low speed select	To the High/Low speed select switch
S	414B	High/Low speed return	To the High/Low speed select switch
T	936C	Resume / Coast / Bump Speed Down	To the 2-state throttle speed select switch and/or the cruise control resume/coast switch
U	905E	CAN low	To the 9- and 3-pin CAN connectors, Diagnostic gauge and/or Instrument panel databus module
V	904E	CAN high	To the 9- and 3-pin CAN connectors, Diagnostic gauge and/or Instrument panel databus module
W	955C	Set / Accelerate / Bump Speed Up	To the 2-state throttle speed select switch and/or the cruise control set/accelerate switch
X	923	Bump enable and brake enable	To the cruise brake enable switch and/or 2-state throttle bump enable switch

Katolight Service - Master Repair Manual - Page 2967

Katolight Service - Master Repair Manual - Page 2968

Ignition Switch

The ignition switch must be connected on all applications. All connections are made through the 21-pin connector. Pin J on the 21-pin connector is the alternator ignition circuit. The alternator ignition must be isolated from switched power to the ECU (pin G) by using a 2-pole ignition switch or the engine may not shut down when the key is turned off.

If necessary to support heavy accessory loads through the key switch (flood lights, electric motors, etc.), battery power to the "BAT" terminal of the key switch can be taken from a separate heavy-duty source instead of Pin B in the 21-pin connector. Pin B is provided for your convenience to simplify wiring on simple power unit installations. However, the fuse and wire gauges are sized for engine fuel system power requirements only. It should not be used if additional loads of more than a few amps will be carried through the key switch. The starter relay and alternator ignition connections can also be made through separate circuits instead of Pins J and D. Only switched power to the ECU must be connected through the 21-pin connector.

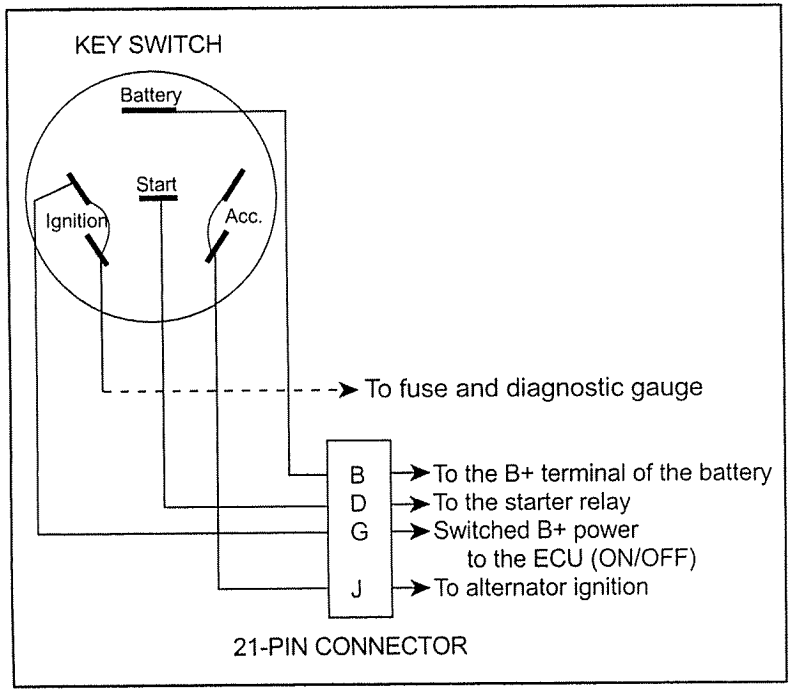

Figure AG-15 - 12, Ignition Switch Connections

Analog Throttle Potentiometer

You must complete this circuit for all industrial applications, even if you don't use the analog throttle feature. If you don't use an analog potentiometer, you must install a throttle emulator (Resister Bridge) that sets the throttle in the low idle range.

If this circuit is not connected on industrial applications, a fault code will be generated. The warning lamp will light and the system will revert to the secondary analog throttle and/or adjustable 2-state throttle inputs. If no throttle input is present on industrial applications, the system will revert to low idle. No connection is required on gen-set applications that are intended to run at rated speed only with no adjustability.

The connector shown below will fit the RE69667 analog throttle or the RE503681 throttle emulator. The harness connection is a Packard Weather Pack 3-cavity, female connector, #12020829, with male terminals, #12124582, and cable seals installed. Note that these are the opposite terminals usually used with this connector.

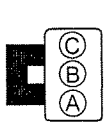

Pin	Circuit	Color	Size	Destination
C	911	Brown	18 AWG	to Pin M on 21-Pin Connector
B	915	Orange	18 AWG	to Pin L on 21-Pin Connector
A	914	Yellow	18 AWG	to Pin C on 21-Pin Connector

Figure AG-15 - 13, Analog Throttle Potentiometer

If you do not use an analog potentiometer, you must install a resister bridge that sets the throttle in the low idle range. You can either use the RE503681 throttle emulator with the connector shown above, or you can wire your own equivalent resister bridge into the appropriate pins on the 21-pin connector as shown below. The exact size of the resisters is not important, as long as total resistance is 2,000-15,000 Ohms, and the small resister is 6% to 20% of the large resister size.

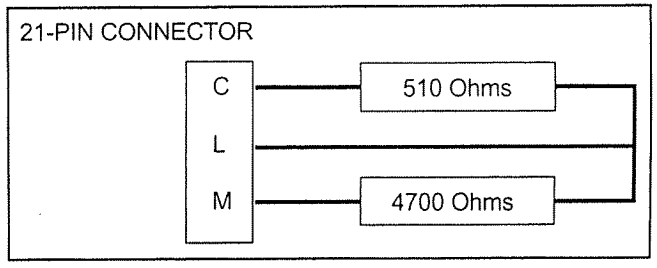

Figure AG-15 - 14, RE503681 Throttle Emulator (or Equivalent)

The RE69667 analog throttle is a multi-turn 5000-Ohm potentiometer throttle designed for stationary applications. Many other throttle styles, including various foot pedal throttles are available from Morse, Williams Controls, and other suppliers. Any potentiometer-style analog throttle will work, as long as total resistance is in the 2,000-15,000 Ohm range.

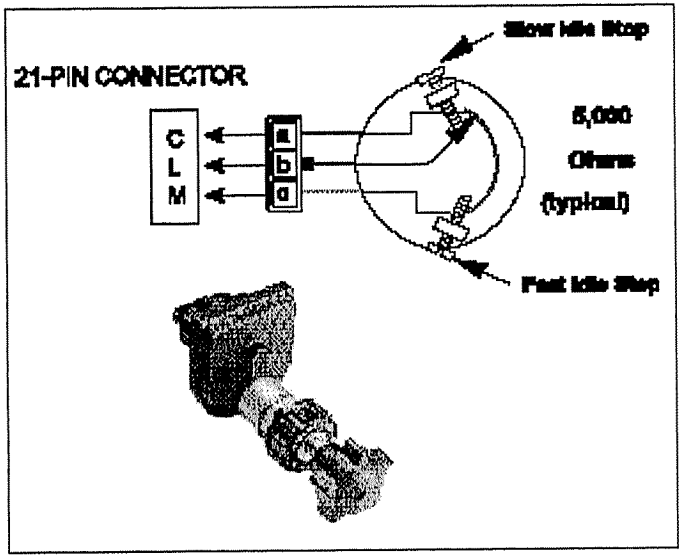

Figure AG-15 - 15, RE69667 Analog Throttle

GEN-SET LOAD SHARING MODULES

A commercial gen-set load sharing module that can provide a throttle input signal in the 1 to 4 volt range can be wired directly to the analog throttle input (pin L). If the load sharing module provides for a reference voltage connection, a 5-volt reference voltage should be taken from Pin M. Sensor ground (Pin C) should not be used to ground the load sharing module. Engine speed stability problems can result under some circumstances. The load sharing module should be grounded directly to the engine cylinder block, or to the negative terminal of the battery.

THROTTLE POTENTIOMETER PRE-ADJUSTMENT PROCEDURE

On industrial applications, if the voltage on 21-pin connector Pin L goes above 4.75 volts or below 0.25 volts, the ECU will generate a fault code and return the engine to slow idle. It does this so that a break or short circuit in the wire does not cause the engine to go to fast idle unexpectedly.

To prevent error codes and unexpected changes in speed, the fast and slow idle stops on the throttle potentiometer must be adjusted so that the voltage on Pin L cannot go below 0.25 volt or above 4.75 volts.

Industrial (non-gen-set) applications also have an Auto-Cal feature that automatically adjusts the analog throttle range to match your sensor. Once the stops are adjusted to limit low and fast idle voltage, the Auto-Cal feature of the ECU will check the exact range of your throttle potentiometer and adjust the ECU to that range. However, your initial installation must be within certain resistance limits for the Auto-Cal feature to work.

Before plugging it into the wiring harness, adjust the throttle potentiometer using the following procedure:

1. With the potentiometer against the slow idle stop, adjust the stop so that the resistance measured between the ground and wiper connections of the potentiometer (21-pin connector Pins C and L) is between 6% and 20% of overall potentiometer resistance.

2. With the potentiometer against the fast idle stop, adjust the stop so that the resistance measured between the power and wiper connections of the potentiometer (21-pin connector Pins M and L) is also between 6% and 20% of overall potentiometer resistance.

This does not have to be a precise adjustment. The Auto-Cal feature will make a precise adjustment automatically. Once it has been done a few times, you will probably find that adjusting each throttle stop screw a predetermined number of turns is accurate enough.

Katolight Service - Master Repair Manual - Page 2969

POTENTIOMETER WITHOUT MECHANICAL ADJUSTMENT STOPS

If a potentiometer without fast and slow idle stops is used, additional fixed resistors can be wired in series with 21-pin connector Pins C and M as shown below to prevent the analog throttle voltage from going outside the upper and lower limits and generating a fault code.

For the Auto-Cal system to work properly, each added resistor should be between 6%-20% of the nominal throttle potentiometer resistance. Total resistance of the potentiometer and both resistors should be in the range of 2000 to 15,000 Ohms.

You do not have to connect this circuit for gen-set applications. Gen-set ECUs default to rated speed (1800 or 1500 rpm), and do not generate a fault code if the throttle isn't connected. If the analog throttle is not connected, the engine will run at rated speed (1800 or 1500) only, with no adjustment.

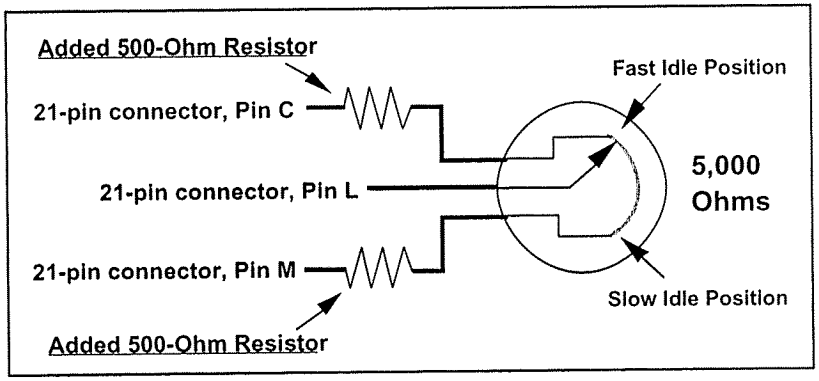

Figure AG-15 - 16,
Potentiometer Without Mechanical Adjustment Stops

Adjustable 2-State Throttle

The Adjustable 2-State Throttle wiring consists of three switches, the High/Low Select ("Idle") switch, the Speed Select ("Bump") switch, and the Bump Enable switch. Only the High/Low Select switch must be connected. The bump feature is optional

HIGH / LOW SELECT ("Idle") SWITCH

The High/Low Select switch circuit must be connected on all industrial applications, even if you do not intend to use the feature.

The High/Low Select switch is part of the Adjustable 2-State Throttle. The high/low switch switches between preset high speed and low speed operating points (normally the factory high idle and low idle). The switch must be in the low-speed position for the analog (potentiometer) throttle to work. You must either provide a high/low switch or you must terminate the circuit through a resister.

If this circuit is not connected on industrial applications, a fault code will be generated. The warning lamp will light and the system will revert to the analog throttle inputs. If no throttle signal is present on industrial applications, the system will revert to low idle. No connection is required on gen-set applications that are intended to run at rated speed only with no adjustability.

The John Deere RE162425 switch is a single-pole, double-throw switch, designed to be used for the High/Low Select switch. It can be purchased separately, or as part of the RE508626 Switch kit

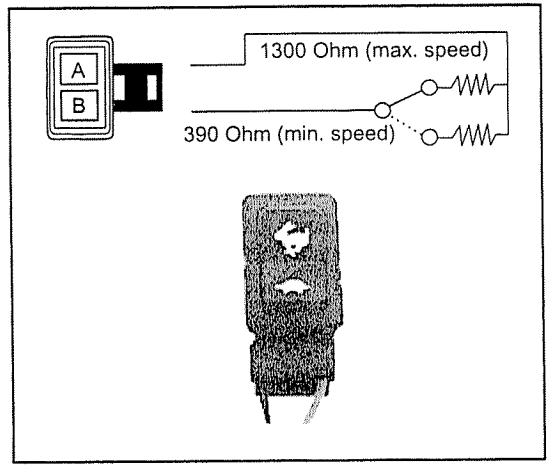

Figure AG-15 - 17, RE162425 High / Low Select Switch

Katolight Service - Master Repair Manual - Page 2970

The mating connector to this switch is a Packard Metri-Pack 150 Series two-cavity female connector, #12052641, with #12048074 sealed female terminals, cable seals and a #12052634 TPA or secondary lock.

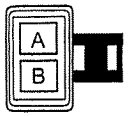

Pin	Circuit	Color	Size	Destination
A	914	Yellow	18 AWG	to Pin "S" on 21-Pin Connector
B	947	Violet	18 AWG	to Pin "R" on 21-Pin Connector

Figure AG-15 - 18, High / Low Select Pin Connectors

The switch contains two resistors, 390-Ohm and 1.3K-Ohm. When in the slow idle position, the 390-Ohm resistor is placed in the circuit and when in the high-idle position, the 1.3k-Ohm resistor is placed in the circuit.

If you do not use the RE162425 High/Low Selector switch, you must provide your own switch, or terminate the circuit with a resister as shown below.

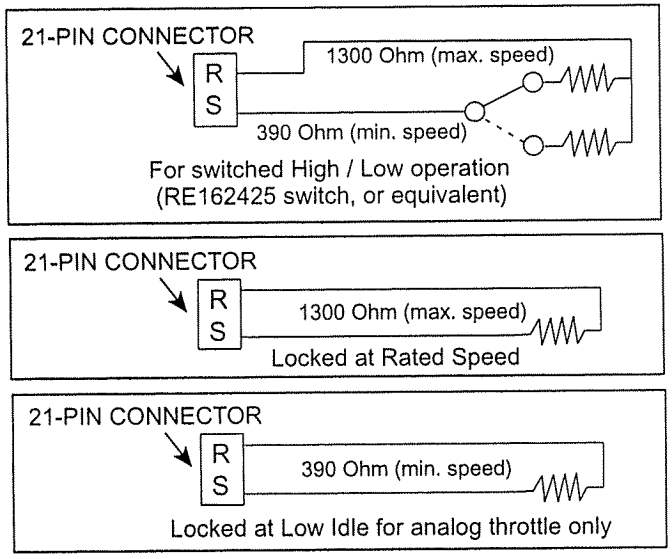

Figure AG-15 - 19, High / Low Select Connect Without RE162425

This connector must not be left open on ECUs equipped with the adjustable 2-state throttle. If the 2-state toggle-switch throttle is not used, one of the two following things must be done:

1. For continuous operation at the factory preset rated speed, with no ability to operate at low idle or any other reduced speed, a 1300-Ohm resistor can be permanently wired between Pins R and S.

2. For use with an analog throttle potentiometer without a 2-state toggle-switch throttle, a 390-Ohm resistor should be permanently wired between Pins R and S.

SPEED SELECT ("Bump") SWITCH

The speed select switch, also known as the "Bump" switch, is used to increase and decrease the minimum and maximum operating speeds. It must be used with the bump enable switch (see below). The bump switch works like the "Accel" and "Coast" buttons on a cruise control. A momentary tap on the switch bumps the speed up or down about 10 rpm. If the switch is held down, speed will continue to ramp up or down continuously until the switch is released, then it will lock in at whatever rpm it has reached at that point. You are not required to connect this circuit unless you intend to use this feature. If you do use this feature, you can use the John Deere RE162423 bump switch shown below, or any single-pole, double-throw, momentary switch with a detented center off position.

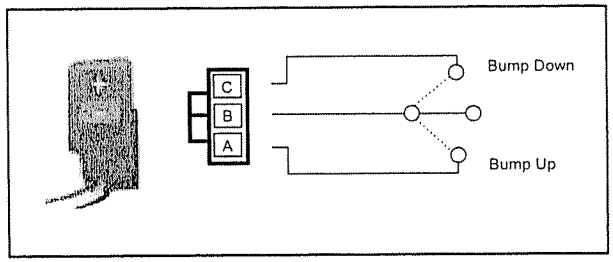

Figure AG-15 - 20, RE162423 Speed Select (Bump) Switch

Katolight Service - Master Repair Manual - Page 2971

The mating connector for the RE162423 switch is shown below. It is a Packard Metri-Pack 150 Series three-cavity male connector, #12129615, with #12045773 sealed male terminals, #12048086 cable seals, and #12052845 TPA or secondary locks.

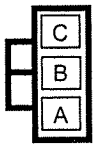

Pin	Circuit	Color	Size	Destination
C	936	Blue	18 AWG	to Pin "T" on 21-Pin Connector
B	012	Red	18 AWG	to IGN circuit from key switch
A	955	Green	18 AWG	to Pin "W" on 21-Pin Connector

Figure AG-15 - 21, RE162423 Mating Connector

If you choose not to use the RE162423 switch, you can use any single-pole, double-throw, momentary switch with a detented center "off" position, wired as shown below

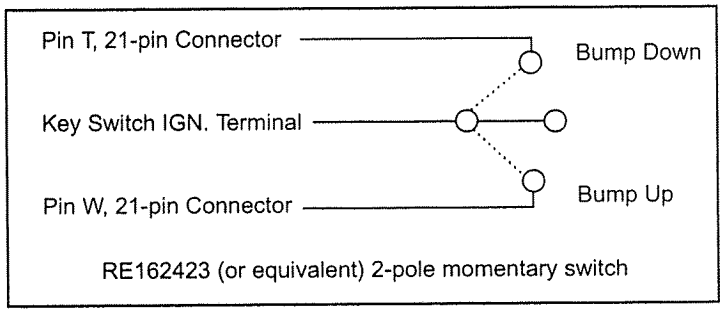

Figure AG-15 - 22, RE162423 Wiring Diagram

To permanently set high and low speeds, press the bump enable button (3) three times after adjustment. Both preset speeds (high and low) will be remembered, even if the ignition is turned off or the battery is disconnected.

If the adjustable 2-state toggle-switch throttle is not used, nothing is required to be plugged in to this connector

BUMP ENABLE SWITCH

The bump enable switch is used in conjunction with the speed select switch to adjust minimum and maximum operating speed. The bump enable switch enables the speed select switch to be read by the ECU. To adjust the minimum or maximum operating speed, the bump enable switch and speed select switch must be operated simultaneously. This prevents unexpected operating speed changes in the event of a failure of the speed select circuit.

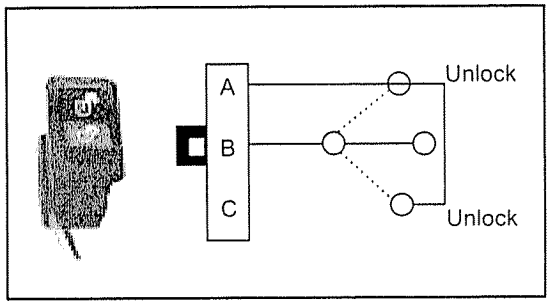

Figure AG-15 - 23, RE162424 Bump Enable Switch

As a convenience for the operator, we offer the RE162424 bump enable switch with two enabling positions, up or down, with the center "off." That way, when placed next to the RE162423 bump switch, both switches can be pressed simultaneously by laying your finger across them. The switch is a single-pole, double-throw, momentary with a detented center "off" position. Both active positions are wired to connect the same two-wire circuit when pressed.

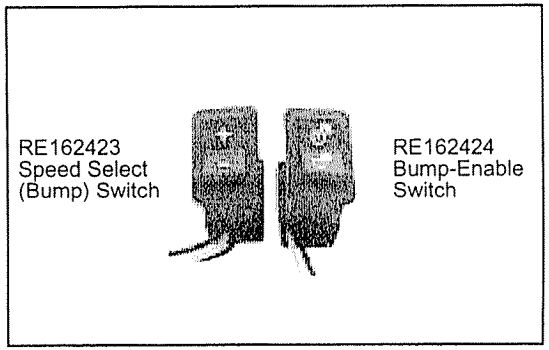

Figure AG-15 - 24, Throttle Switches

Katolight Service - Master Repair Manual - Page 2972

The mating connector on the RE162424 bump enable switch is shown below. It is a Packard Metri-Pack 150 Series three-cavity female connector, #12110293, with #12048074 sealed female terminals, #12048086 cable seals, and #12052845 TPA or secondary locks. The unused cavity has a #12059168 cavity plug installed.

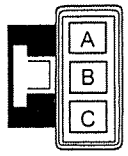

Pin	Circuit	Color	Size	Destination
A	923	Orange	18 AWG	to Pin X on 21-Pin Connector
B	012	Red	18 AWG	to IGN circuit from key switch
C		Cavity Plug		Unused

Figure AG-15 - 25, RE162424 Mating Connector

If the RE162424 switch is not used, any similar single-pole, double-throw, momentary switch with a detented center off position switch, or a simple single-pole momentary switch can be wired as shown below to provide the bump-enable function.

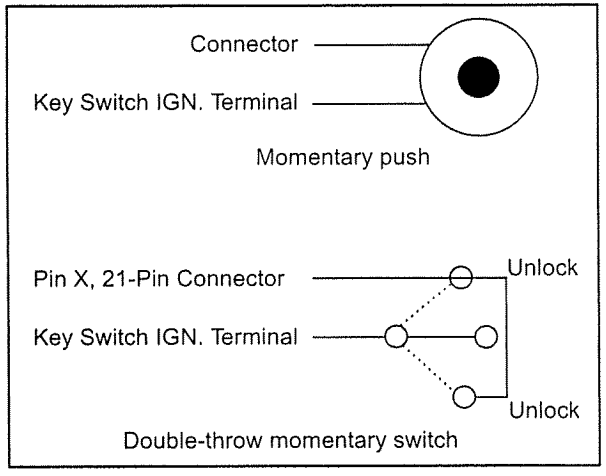

Figure AG-15 - 26, RE162424 Wiring Diagram

If the speed bump feature is not used, this circuit does not need to be connected.

RE68155 Diagnostic Gauge

We require the RE68155 or equivalent SAE J1949 CAN based on-board diagnostic system for all 12.5L applications. The RE68155 Diagnostic Gauge is a complete on-board engine diagnostic and display system. It includes built-in "Warning" and "Stop Engine" lights to alert the operator of any problems, and it digitally displays diagnostic codes, rpm, hours, oil pressure, coolant temperature, voltage, engine load, fuel consumption, manifold temperature and other engine parameters.

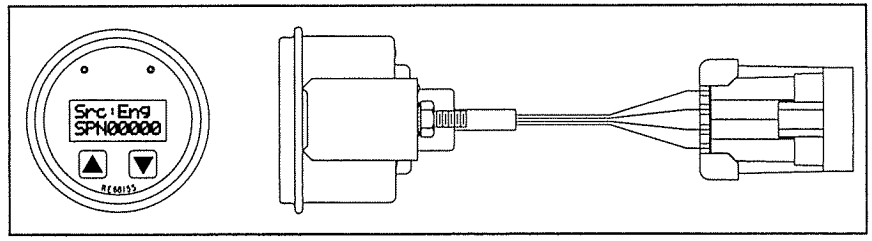

Figure AG-15 - 27, RE68155 Diagnostic Gauge

There are three ways to connect the RE68155 Diagnostic Gauge to your system:

1. Wire the RE68155 Diagnostic Gauge directly to the 21-pin instrumentation and controls connector.
2. Use the RE507276 adapter harness to connect the Diagnostic Gauge to the 9-pin diagnostic connector.
3. Use the RE162450 Databus Module to connect the RE68155 Diagnostic Gauge and up to six auxiliary gauges plus backlighting to the 21-pin instrumentation and controls connector.

Katolight Service - Master Repair Manual - Page 2973

WIRING THE DIAGNOSTIC GAUGE DIRECTLY TO THE 21-PIN CONNECTOR

Refer to the following illustration to connect the RE68155 Diagnostic Gauge to the 21-pin instrumentation and control connector.

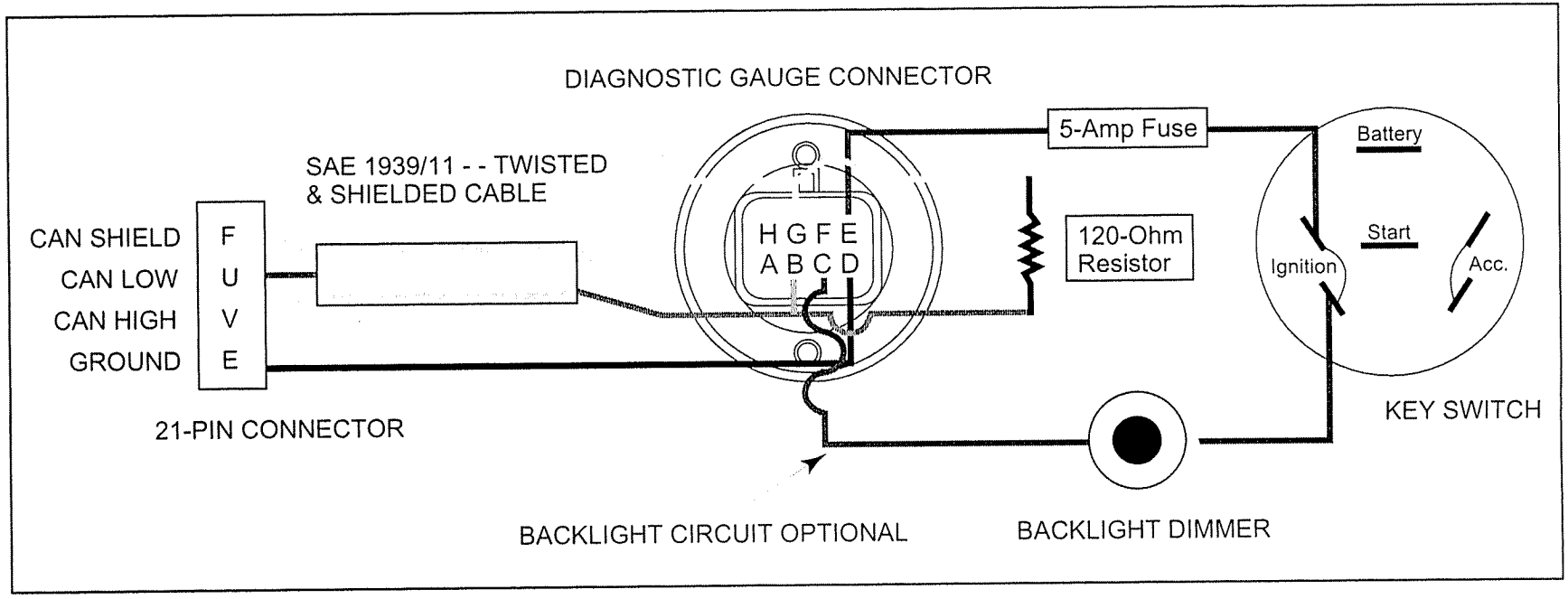

Figure AG-15 - 28, RE68155 Diagnostic Gauge

Pin "E" is the battery connection, and has an allowable voltage range of 9 to 32 volts with respect to Pin D, or ground, for proper operation.

Katolight Service - Master Repair Manual - Page 2974

The mating connector for the diagnostic gauge is a Packard Metri-Pack, 150 Series, 8-way female connector.

Part	Part Number
Female connector assembly	12047937
TPA	12066304
Sealed terminals, 16-18 AWG(1.0-.8 sq mm)	12048074
Sealed terminals, 20-22 AWG(.5-.35 sq mm)	12084200
Cable seals, 2.85-2.03 mm dia	12048086
Cable seals, 2.15-1.60 mm dia	12089678
Cable seals, 1.70-1.29 mm dia	12048087

The terminal and cable seals should be selected for the size of wire used. All of the terminal positions on the diagnostic gauge connector are used. If the mating connector does not use a position for a particular application, it should be filled with a cavity plug, part number 12059168, to ensure sealing of the entire connector assembly.

All the connecting wires you need are in the 21-pin instrument panel connector. If you aren't going to use backlighting or auxiliary gauges, you only have to hook up CAN H, CAN L, CAN Shield, power, and ground to the gauge. Power must come from the ignition terminal of the key switch through a 5-amp fuse.

SAE 1939/11-type shielded cable should be used to connect the CAN H, CAN L and CAN Shield wires from the 21-pin connector to the gauge. SAE 1939/11-type shielded cable is available from many commercial sources including Champlain Cable. To make your own cable, the CAN H and CAN L wires need to be twisted together along their entire length, and shielded with a metal cover. The CAN Shield wire should be a bare copper wire running inside (and contacting) the metal shield alongside the twisted CAN H and CAN L wires. It is a good idea to switch to an insulated wire where the wire exits the shield so it does not ground out against anything.

The CAN H and CAN L wires must be connected through a 120-Ohm resister on the end of your harness where they connect to the diagnostic gauge. If you use more than one CAN-based device, only one 120-Ohm resister should be connected. It must be connected at the end of the CAN buss, where the furthest device from 21-pin connector is connected.

If you want backlighting, just follow the schematic and find the corresponding pins you need in the 21-pin connector. If dimming is desired, normally a dimmer (RE162449) is used. This reduces the voltage to the backlighting from full voltage (about 14 volts for a 12-volt system) for full brightness to about 2 volts for the lowest brightness. If a 24-volt system is used, the voltage regulator (RE162448) should be used to provide 12 volts for the backlighting.

The backlight system is an LED. LEDs require about 2 volts to turn on. The voltage range for the backlighting is about 2 volts to 16 volts.

A 5-Amp fuse with the following characteristics (per SAE J1284) must be used:

Rating	Blow Time
110%	100 hours, minimum
135%	1500 seconds, maximum
200%	5 seconds, maximum
350%	0.08 seconds, minimum

Katolight Service - Master Repair Manual - Page 2975

USING THE RE507276 DIAGNOSTIC GAUGE ADAPTER HARNESS

An easier way to connect the RE68155 Diagnostic Gauge is to use the RE507276 adapter harness, available through service parts. The RE507276 adapter harness connects with the 9-pin Deutsch diagnostic connector, which is present on every engine wiring harness. It includes connectors for the RE162449 backlight dimmer and the RE162448 24-volt-to-12-volt converter, which is required to operate the 12-volt backlight system with a 24-volt engine electric system. It can also be used with the available RE508492 and RE508493 jumper wires for fixed (constant and non-dimmable) backlighting on 12-volt systems. The RE507276 adapter harness is approximately 12-feet long from the diagnostic port connector to the gauge connector. It includes a standard 3-pin Deutsch CAN connector with 120-Ohm terminator that can be used to transmit the SAE J1939 CAN signal to other devices.

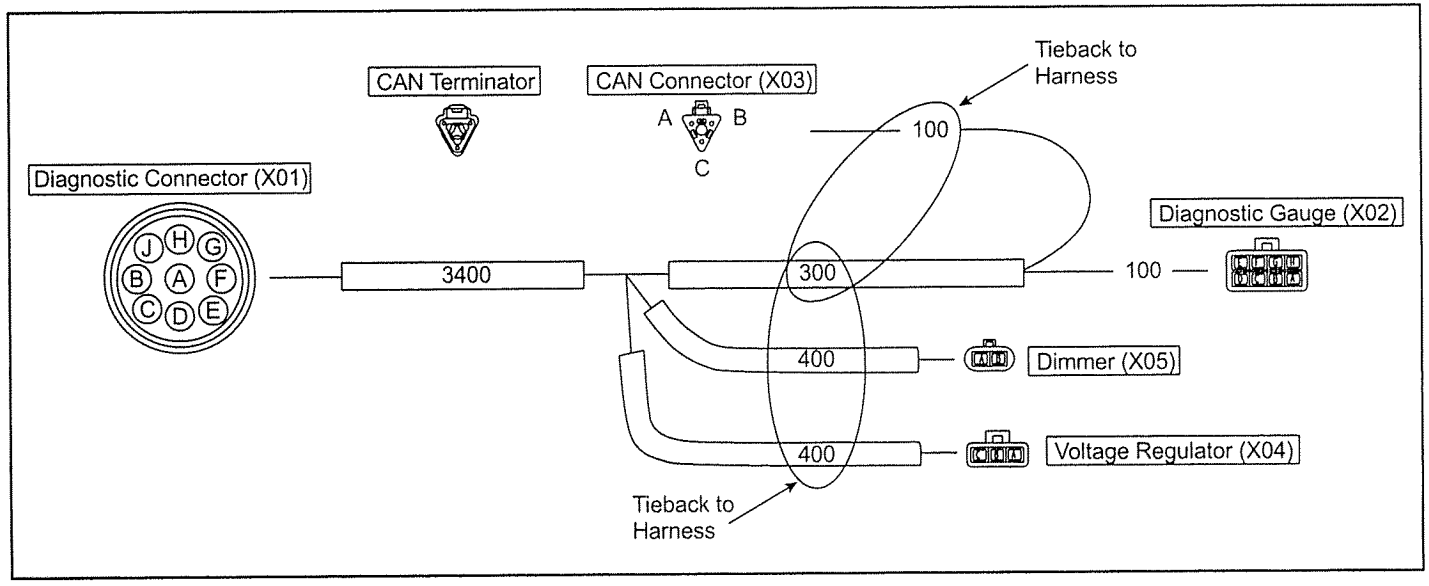

Figure AG-15 - 29, RE507276 Adapter Harness

The RE507276 adapter harness does not connect to any wires in the 21-pin instrumentation and control connector or any unterminated wires. It connects to the 9-pin diagnostic connector that is normally used only for service. It leaves 21-pin connector and unterminated wires free. It does not include wiring for any auxiliary gauges.

Katolight Service - Master Repair Manual - Page 2976

Direct Auxiliary Gauge Wiring

The RE68155 Diagnostic Gauge can drive the following optional auxiliary gauges:

RE163436	Percent load gauge
RE162422	12- volt voltage gauge
RE163277	24- volt voltage gauge
RE162419	Tachometer
RE162418	Gauge, Oil Pressure
RE162416	Gauge, Coolant Temp
RE162427	Audible warning alarm

These are simple display gauges that operate from a second proprietary buss from the diagnostic gauge.

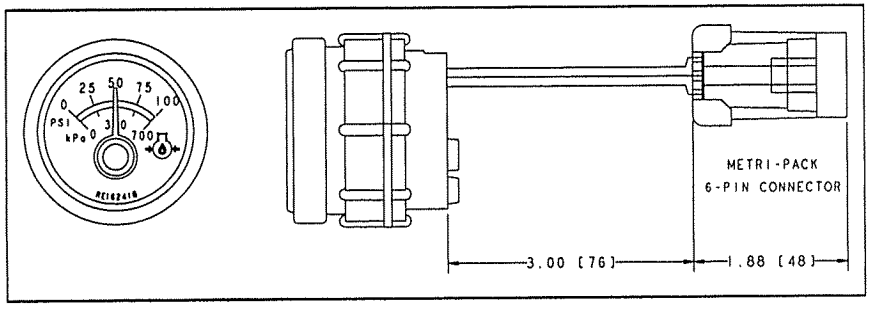

Figure AG-15 - 30, Typical Auxiliary Gauge

The RE162427 audible alarm module is applied in the same way as the analog gauges. The audible alarm module is also prewired for a single-pole, double-throw (normally open / normally closed) relay output. The relay output can drive 0.5 Amps at 125 VAC max, 1 Amp at 24 VDC max, or 62.5 VA, 30 Watts max. To connect to the relay, the RE162427 audible alarm module has a second Metri-Pack connector as shown below. The connector mates with a Metri-Pack 150-series, 3-way connector, part number 12110293.

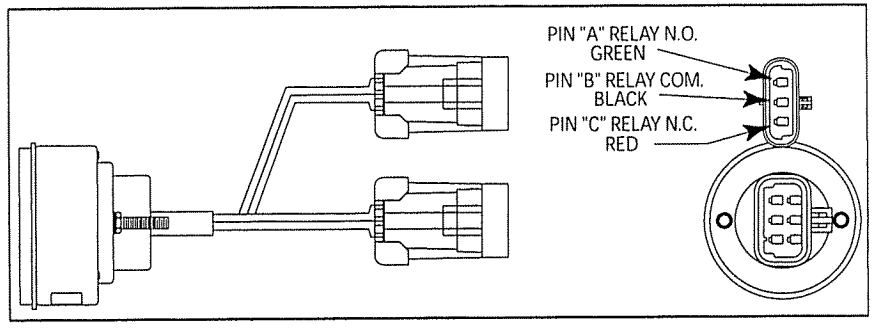

Figure AG-13 - 31, Audible Alarm Module, RE162427

There are two ways to connect the auxiliary gauges, a direct wiring connection, and the RE162450 databus module.

Refer to the following diagram to directly wire auxiliary gauges.

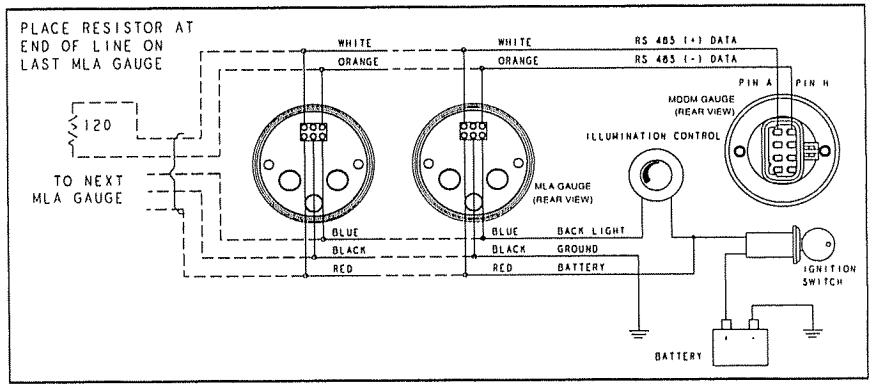

Figure AG-15 - 32, Auxiliary Gauge Wiring Diagram

As many auxiliary gauges as desired can be connected in parallel as shown. The proprietary buss must also be terminated with a 120-Ohm resister, as shown.

Note that the auxiliary gauge signal wires, Pins A and H are not connected on the RE507276 diagnostic gauge adapter harness, although they can be connected to the harness by adding the appropriate terminals and cable seals listed in the chart in the previous section to the Metri-Pack 8-way connector.

Katolight Service - Master Repair Manual - Page 2977

Using the RE162450 Databus Module

By far the easiest way to wire the diagnostic gauge and multiple auxiliary gauges is to use the RE162450 Databus Module. It includes shielded wiring and connectors for the diagnostic gauge and up to 6 auxiliary gauges. It also includes plugs for all backlighting accessories and 120-Ohm terminators for the SAE J1939 CAN buss and the proprietary auxiliary gauge buss. It is included with RE162429 panel and RE508625 kit or available separately from parts.

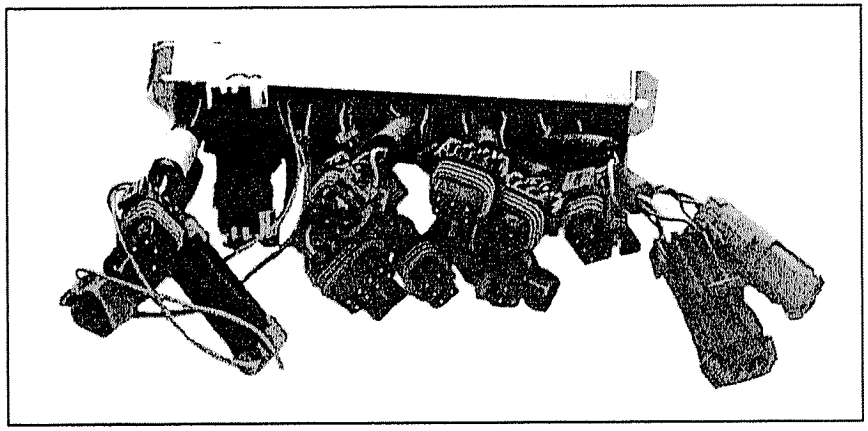

Figure AG-15 - 33, RE162450 Databus Module

The diagnostic gauge, all backlighting accessories, and all six auxiliary gauges plug right into the databus module. Only the CAN link and power and ground connectors have to be provided by the user.

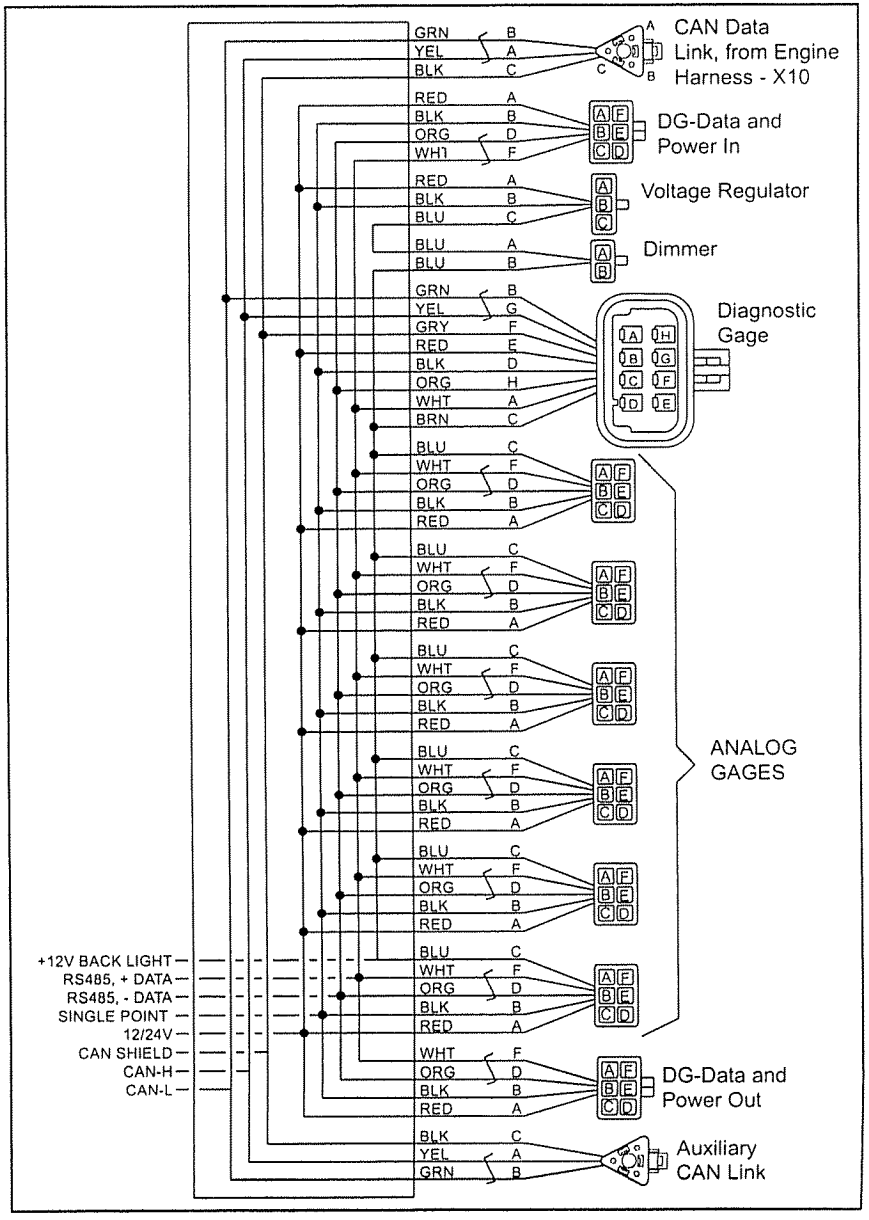

Figure AG-15 - 33a, RE162450 Databus Module Wiring Schematic

Katolight Service - Master Repair Manual - Page 2978

For installation of gauges and backlighting accessories, refer to the following diagram.

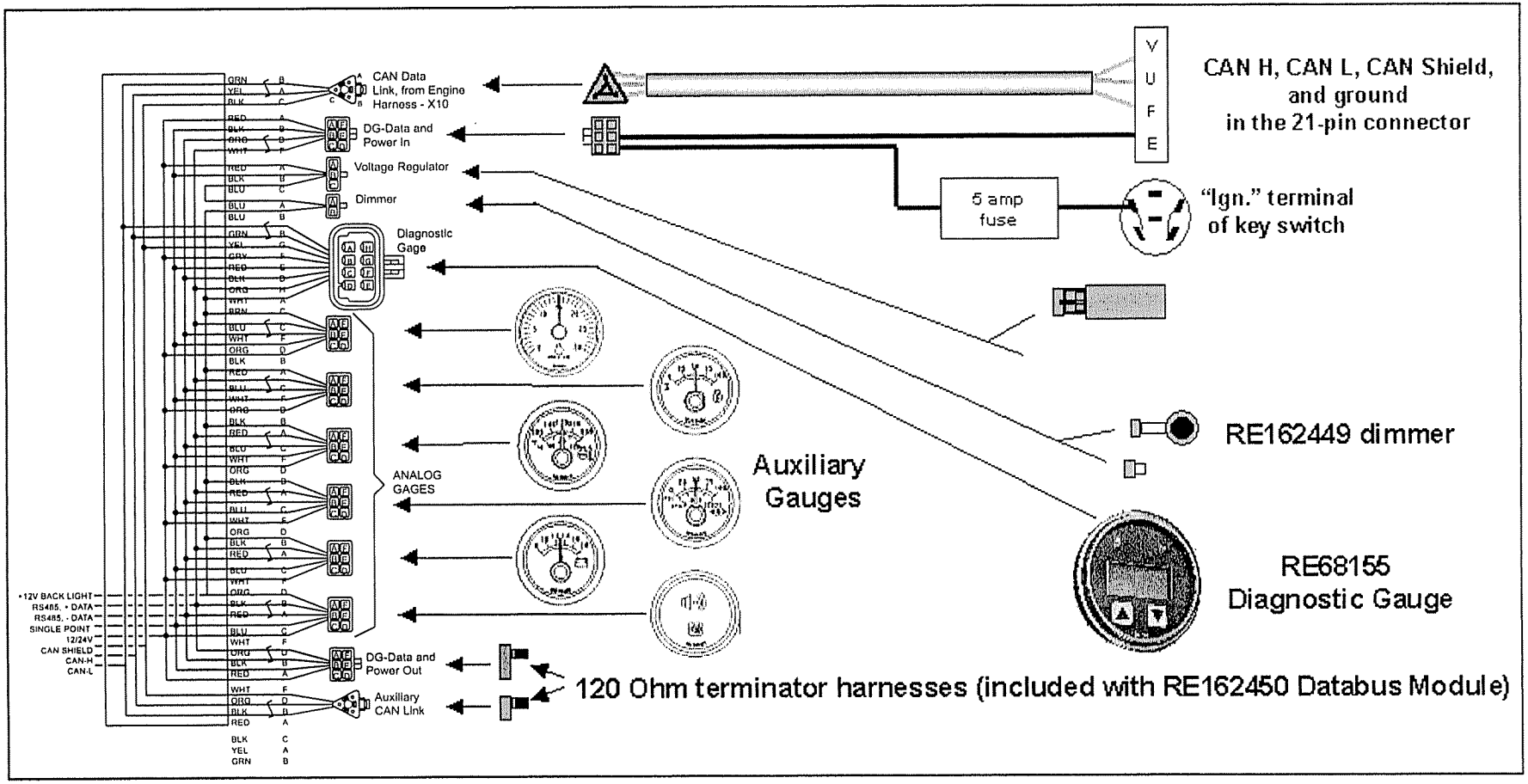

Figure AG-15 - 34, RE162450 Databus Module; Gauges and Backlighting Accessories

Refer to the following three sections for CAN Connector, Power Connector, and backlighting wiring details.

Katolight Service - Master Repair Manual - Page 2979

CAN CONNECTION TO RE162450 DATABUS MODULE

The CAN connection to the databus module is made through SAE J1939 compatible shielded, twisted-pair cable. The mating connector for the databus CAN connection is a Deutsch DT06-3S-E003 connector with W3S-1939 secondary locking wedge, as shown below. It plugs in to the databus as shown. The shield is attached to black wires at each end for proper termination in the connectors.

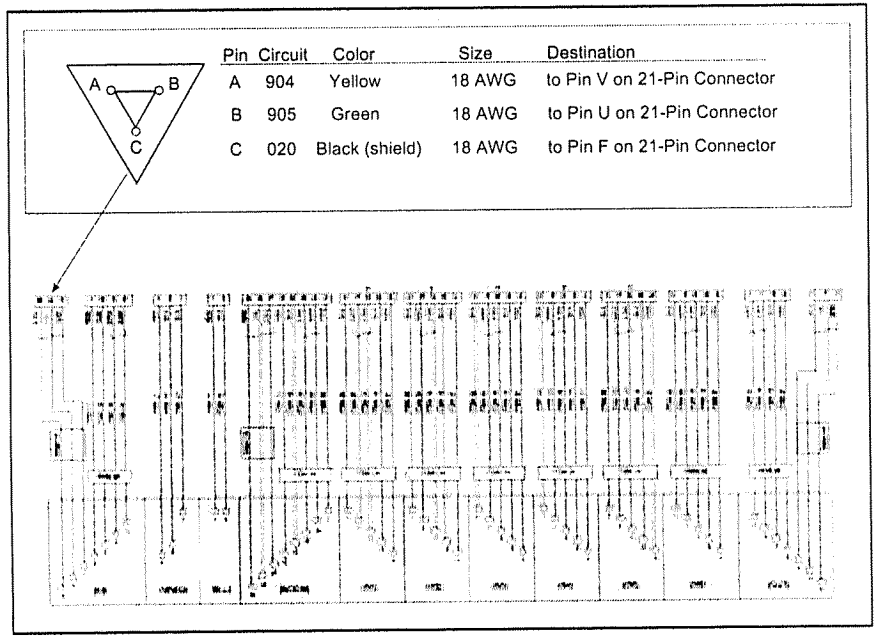

Figure AG-15 - 35, CAN Connection to the Databus Module

SAE 1939/11 shielded cable is available from various suppliers, including Champlain Cable.

POWER CONNECTION TO THE DATABUS MODULE

Power is provided to the databus module through a Packard Metri-Pack 150 Series 6-cavity male connector, #12124107, with #12045773 sealed male terminals, #12048086 cable seals, and #12052845 TPA or secondary locks on the instrument panel harness. The unused cavities are plugged with #12059168 cavity plugs. The mating connector is shown below. It plugs in to the databus as shown.

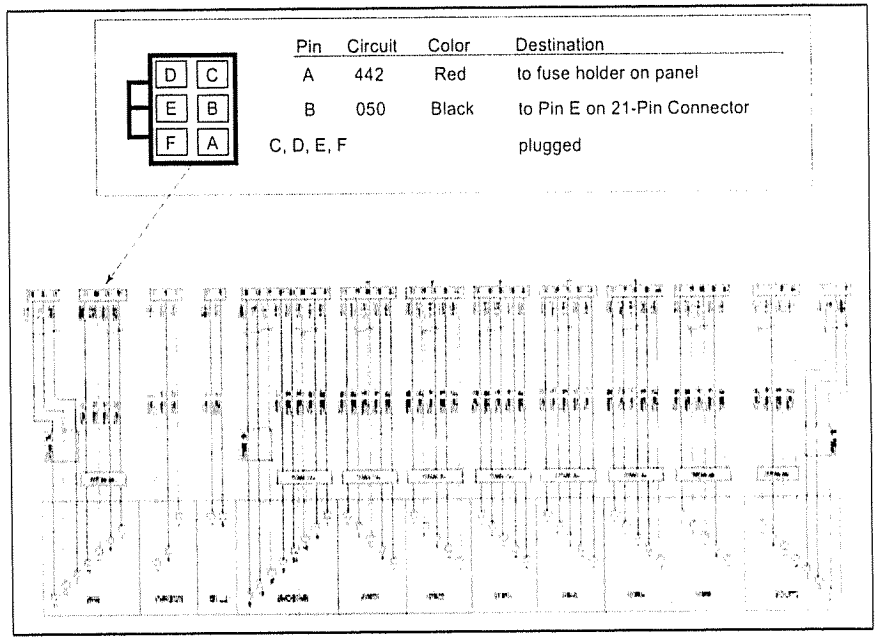

Figure AG-15 - 36, Power Connection to the Databus Module

Katolight Service - Master Repair Manual - Page 2980

BACKLIGHTING CONNECTIONS TO THE DATABUS MODULE

For 12-volt operation, the RE508493 12-volt backlight jumper should be installed. This provides 12-volt power directly to the backlight circuit. For 24-volt operation, an RE162448 24-volt-to-12-volt converter must be plugged into the 3-pin connector, to reduce 24-volt battery power to 12 volts.

Do not leave the RE508493 12-volt backlight jumper in place for 24-volt operation. This would provide 24 volts to the 12-volt instrumentation backlights, and result in failures of the Diagnostic Gauge, tachometer, and all other auxiliary gauges. Always order and install the RE162448 24-volt-to-12-volt converter for 24-volt backlighting. The gauges will operate on either 12 or 24 volts. RE162448 is only required if backlighting is used.

Wiring of the dimmer connector is the same for 12-volt or 24-volt operation. For "no backlighting," do not connect anything to this connector. For backlighting to be fully "on" all the time, install the RE508492 jumper wire. To turn backlighting on and off, a simple on/off toggle switch can be added to the wire between on the RE508492 jumper.

Shutdown Override Switch

The shutdown override switch is a single-pole, single-throw, normally-open, momentary switch used to temporarily override an engine shutdown.

On Engine ECU's with the Engine Protection Shutdown feature active, the engine protection shutdowns can be overridden for 30 seconds at a time. The Shutdown Override is activated when Pin P on the 21-pin connector is connected to Pin N on the 21-pin connector.

A special RE163465 push-button assembly is available from John Deere for this purpose that plugs directly into the shutdown override connector. The harness connection for the RE163465 shutdown override button assembly is a Packard Metri-Pack 150 Series two cavity male connector, #12162000 with #12045773 sealed male terminals, cable seals and a #12052634 TPA or secondary lock.

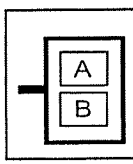

Pin	Size	Destination
A	18 AWG	to Pin "N" on 21-Pin Connector
B	18 AWG	to Pin "P" on 21-Pin Connector

Figure AG-15 - 37, Shurdown Override Switch

If you choose not to use the RE163465 push button assembly, any normally open momentary switch wired as shown below can be used.

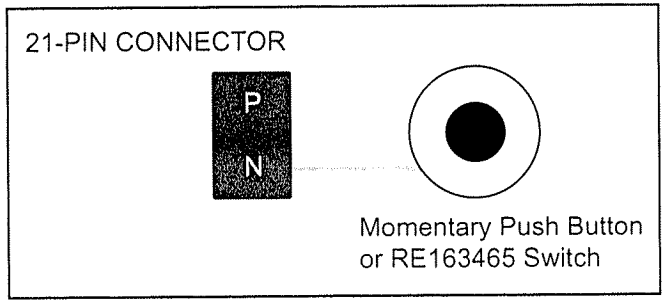

Figure AG-15 - 38, Shutdown Override Switch (RE163465)

If the circuit is open (button not pushed), the engine will shutdown 30 seconds after an automatic shutdown sequence starts. Each time the circuit is completed (button pushed), the shutdown timer is reset to a full 30 seconds and the engine runs in a derated power mode. Repeated connection of the Shutdown Override circuit each 30 seconds allows for continued engine operation.

Note: Holding the Shutdown Override continuously "ON" does not reset the 30-second timer.

Manually shutting down the engine and turning power "off" to the ECU resets the ECU. Using the Shutdown Override is not required on engine starts or restarts if the ECU power has been turned "off."

On Engine ECU's that do not have the shutdown feature active, the Shutdown Override is disabled.

Katolight Service - Master Repair Manual - Page 2981

Additional Features

Cruise Control

The Cruise Control feature is intended for use on mobile applications. Refer to the following diagram when wiring the Cruise Control feature.

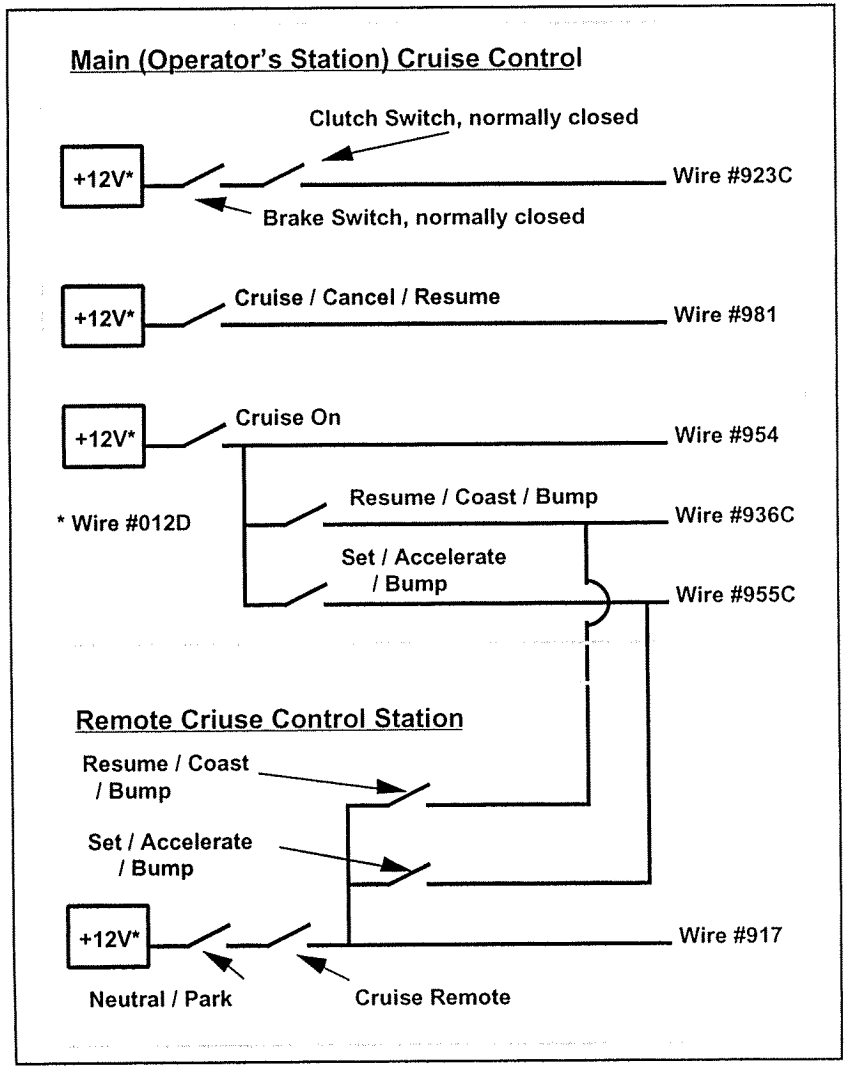

Figure AG-15 - 39, Cruise Control Wiring Diagram

The cruise control wires shown on the chart above are accessed through one Female 8-way Metri-Pack 150 connector on the Engine/ECU wiring harness.

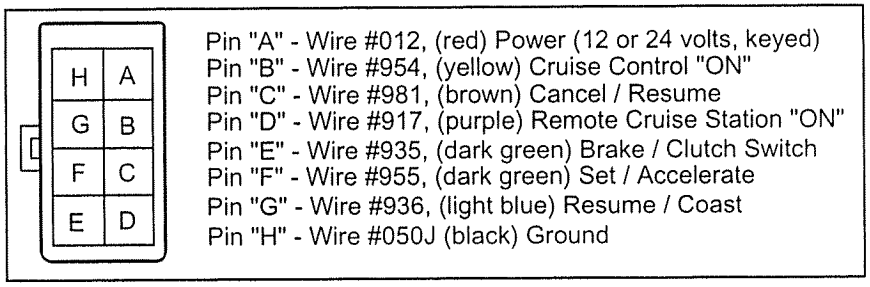

Figure AG-15 - 40, Cruise Control Connector

For details of each wire and feature, refer to the following individual wire instructions:

CRUISE ON - WIRE #954 (yellow)

The Cruise Control at the operators station can be turned "ON" by supplying system voltage (+12 volts or +24 volts) to the Cruise On wire #954. Switched battery voltage can be accessed through Wire #012.

Two other conditions must exist for the main Cruise Control station to be active. The Cruise Brake/Clutch Enable - Wire #935 must also be connected to the positive system voltage lead; and the Cruise Remote - Wire #917 must be unpowered (i.e., turned "off"). The main cruise control station and the remote station cannot be active at the same time.

Power for Wire #936 and Wire #955 should come from Wire #954 as shown in the above illustration. See the following sections on the functions of Wire #936 and Wire #955.

Katolight Service - Master Repair Manual - Page 2982

CRUISE RESUME / COAST / BUMP SPEED DOWN -
WIRE #936C (light blue)

At the main cruise control station, a momentary contact switch should be connected from Wire #936 to Wire #954. When the cruise control is "ON," a momentary contact on this circuit returns the engine speed to it's previous set speed. When contact is maintained, the engine speed set point slowly decreases. The Cruise Resume / Coast / Bump Speed Down function has a ramped speed adjustment rate. The engine speed decreases faster, the longer the contact is held "ON."

At the remote cruise control station (if used), a momentary contact switch should be connected from Resume / Coast / Bump Down (Wire #936C) to Wire #917. (See Wire #917 instructions.)

CRUISE BRAKE ENABLE - WIRE #935 (orange)

The Cruise Brake Enable (Wire #935) should be connected to system voltage (+12 volts or +24 volts) through a normally closed switch on the vehicle brake system. 12 or 24 volts can be accessed through Wire #012. When the brakes are engaged, the circuit is broken and the cruise control is disconnected but will retain the engine set speed in memory. For a transmission with a clutch, normally closed clutch and brake switches in series should be used.

The Cruise Brake Enable circuit (Wire #935) disconnects both the main cruise controls in the operator's station and the remote cruise control station, if used.

CRUISE SET / ACCELERATE / BUMP SPEED UP -
WIRE #955 (dark green)

At the main cruise control station, a momentary contact switch should be connected from Wire #955 to Wire #954. When the cruise control is "ON", a momentary contact on this circuit sets the engine speed in memory. When contact is maintained, the engine speed set point slowly increases. The Cruise Set / Accelerate / Bump Speed Up function has a ramped speed adjustment rate. The engine speed increases faster, the longer the contact is held "ON."

At the remote cruise control station (if used), a momentary contact switch should be connected from the Set / Accelerate / Bump Up (Wire #955) to Wire #917. (See Wire #917 instructions.)

CRUISE CANCEL / RESUME - WIRE #981 (brown)

The Cruise Cancel / Resume (Wire #981) is connected to battery voltage (+12 or +24 Volts) with a momentary contact switch. A high quality switch with gold contacts should be used. 12 or 24 volts can be accessed through Wire #012.

The Cancel / Resume function can be used to temporarily interrupt a "set" cruise speed. To do so, the operator contacts the Cancel / Resume button and speed decreases toward idle. To resume the "set" cruise speed, the operator must contact the Cancel / Resume button again within one minute. (This could be used by a tractor operator at the end of each crop row.) If the second Cancel / Resume contact is not made within one minute, the engine reverts to normal cruise control and to resume "set" speed requires using the "Resume" switch.

Cruise Cancel / Resume does not resume at engine speeds below 1300 RPM.

The Cruise Cancel / Resume function does not operate when Cruise Remote (Wire #917, purple) is active. (See Wire #917 instructions.)

CRUISE REMOTE - WIRE #917 (purple)

Wire #917 is used to turn a second (remote) cruise control station on and off. This is intended for use where a remote engine speed adjustment is needed, such as at an external PTO location. When Wire #917 is connected to battery voltage, the second cruise control station is switched "on." When Wire #917 is turned "off" (no voltage, open circuit) the second cruise control station is switched off. The primary (dashboard) cruise control must be turned off for the second station to be used. If the ECU detects that both cruise control stations are "ON," the cruise control will not function.

GROUND - Wire #050J (black)

A ground is not needed for any of the primary cruise functions. This ground wire is provided for any other needs the customer might have, such as wiring a cruise indicator light at the operators station.

Katolight Service - Master Repair Manual - Page 2983

Katolight Service - Master Repair Manual - Page 2984

High Air Cleaner Restriction Switch

A 2-way Weather-Pack male connector is provided in the engine/ECU wiring harness for a customer-provided high air cleaner restriction switch.

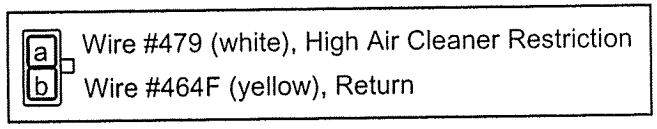

Figure AG-15 - 41, High Air Cleaner Restriction Connector

When this circuit is open (Wires #479 and #464F not connected, or nothing plugged into this connector), the engine will operate normally and no error code will be generated. When Wire #479 is connected to Wire #464F, the ECU will illuminate a fault lamp and generate a high air cleaner restriction error code. If an ECU with engine derate protection is specified, the engine will derate 2% per minute to a maximum derate of 20%. If the switch opens during the derate sequence, the power will increase at 2% per minute until normal power is reached or until the switch closes again. The current fault code will remain on until normal power is reached.

The high air cleaner restriction switch will not activate a shutdown sequence, regardless of which ECU you have specified. It is up to the operator to shut down and resolve the problem.

Low Coolant Level Switch

A female 2-way Metri-Pack 280 connector is provided in the engine/ECU wiring harness for a customer-provided low coolant level switch.

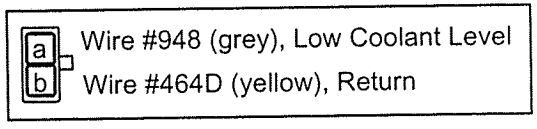

Figure AG-15 - 42, Low Coolant Level Switch Connector

When this circuit is open (Wire #948 and #464D not connected, or nothing plugged into this connector), the engine will operate normally. When Wire #948 is connected to Wire #464D, the ECU will illuminate a fault lamp and generate a low coolant level error code. It may also activate a derate/shutdown sequence, depending on which ECU you have specified:

1. For ECUs without any "Engine Protection" features enabled: The ECU will not derate the engine or shut it down. It is up to the operator to shut down and resolve the problem.

2. For ECUs with the "Engine Derate" feature enabled: The ECU will reduce engine power at 20% per minute to a maximum reduction of 40% (60% of normal power remaining), but it will not shut the engine down. It is up to the operator to shut down and resolve the problem.

3. For ECUs with the "Engine Shutdown" feature enabled: After 30 seconds, the engine will automatically shut down.

If Wire #924B returns to an open circuit condition within the 30-second delay period, the engine gradually increases back to original power, and the engine does not shut off. The fault lamp illuminates until the power returns to normal, then it shuts off.

The engine does not shut down immediately when Wire #924B is grounded, so it should not be used if an immediate shutoff is required. For an immediate shutdown, the external stop-engine input wire should be used (see instructions, below).

External Stop-Engine Input

A female 2-way Metri-Pack 150 connector is provided in the Engine/ECU wiring harness for an immediate external shutdown input. This allows the OEM to trigger an immediate shutdown from external switches, such as a loss of prime switch, or hydraulic overtemperature switch. Any number of normally open switches that close to trigger the shutdown can be added in parallel.

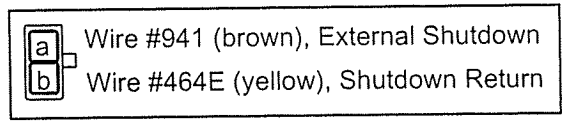

Figure AG-15 - 43, External Stop-Engine Input Connector

When the 2-wire circuit is open, the engine operates normally. When the 2-wire circuit is closed, the ECU shuts the engine off immediately and triggers a fault code. (For details, see the Operator's Manual.)

Note: The External Shutdown function is always active, even if an ECU without shutdown is specified. Also, the external shutdown function shuts down the engine immediately, with no delay period and no opportunity to override. If you do not wish to use this feature, do not connect anything to the wires.

External Derate Input

A Male 2-way Metri-Pack 150 connector is provided in the Engine/ECU wiring harness for an external derate input. This allows the OEM to trigger a 20% reduction in engine power from external switches, such as a loss of prime switch or hydraulic overtemperature switch. Any number of normally open switches that close to trigger the derate can be added in parallel.

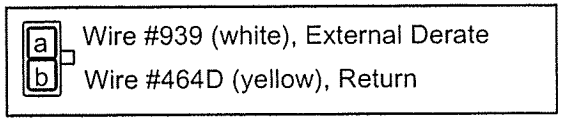

Figure AG-15 - 44, External Derate Input Connector

When the circuit between Pins A and B closes, the engine will derate at a rate of 2% per minute for a total derate of 20% in 10 minutes. A fault code and warning light will also be generated. If the circuit opens during that time, the engine will increase power at 2% per minute until reaching full power. Once the engine returns to full power the warning light will turn off.

Note: The External Derate function is always active, even if an ECU without derate is specified. If you do not wish to use this feature, do not connect anything to the wires.

Auxiliary "Warning" Lamp

A female 2-way Metri-Pack 150 connector with Wires #012E (red, Pin A) and #473 (orange, Pin B) is provided in the Engine/ECU harness to operate an auxiliary "Warning" lamp. Pin A (Wire# 012E) goes to the positive terminal of a 12- or 24-volt indicator light. Pin B (Wire #473) goes to the ground side of the bulb. Pin A is always "live" with 12 or 24 volts when the key is on. The ground (Pin B) acts as the switch.

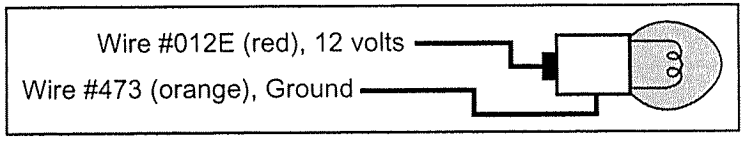

Figure AG-15 - 45, Auxiliary "Warning" Lamp Wiring

Use an amber-colored light for the warning lamp. When a "Warning" problem is detected by the ECU, the lamp blinks. "Warnings" include lower-than-normal oil pressure, higher-than-normal coolant temperatures, higher-than-normal charge air temperatures, or power derates.

This circuit supports a maximum current of 100 mA. It should not be used to drive any load larger than a 1-Watt bulb. To drive larger loads, such as audible alarms, we recommend installing the RE162427 alarm module that plugs into the databus module in the instrument panel. It includes a relay for additional loads up to 0.5 Amps at 125 volts AC, 1 Amp at 12-24 volts DC, or 62.5 VA, 30 Watts max.

Connecting this terminal is not required if you use the RE68155 diagnostic gauge. The RE68155 diagnostic gauge has amber ("Warning") and red ("Stop Engine") lamps built in.

The warning light driver also serves as the "blink light" for blink-code dagnostics.

Auxiliary "Stop-Engine" Lamp

A male 2-way Metri-Pack 150 connector with series female terminals is provided in the engine/ECU harness to operate an auxiliary "Stop Engine" lamp. Pin A (Wire #012D) goes to the positive terminal of a 12- or 24-volt indicator light. Pin B (Wire #474) goes to the ground side of the bulb. Pin A is always "live" with 12 or 24 volts when the key is on. The ground (Pin B) acts as the switch.

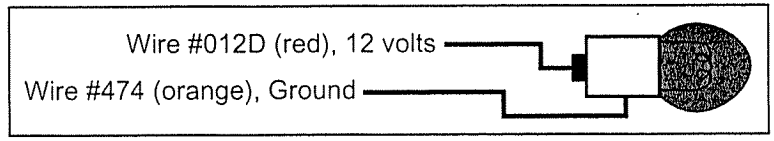

Figure AG-15 - 46, Auxiliary "Stop-Engine" Lamp Wiring

Use a red-colored light for the stop-engine lamp. When a "Shutdown Engine" problem is detected by the ECU, this fault lamp blinks. "Shutdown" problems include extremely low oil pressure, and extremely high coolant temperatures. On ECU's with shutdown enabled, an "ON" lamp indicates that the engine will shutdown within 30 seconds.

This circuit supports a maximum current of 100 mA. It should not be used to drive any load larger than a 1-Watt bulb. To drive larger loads, such as audible alarms, we recommend installing the RE162427 alarm module that plugs into the databus module in the instrument panel. It includes a relay for additional loads up to 0.5 Amps at 125 volts AC, 1 Amp at 12-24 volts DC, or 62.5 VA, 30 Watts max.

Connecting this terminal is not required if you use the RE68155 diagnostic gauge. The RE68155 diagnostic gauge has amber ("Warning") and red ("Stop Engine") lamps built in.

Katolight Service - Master Repair Manual - Page 2985

Secondary Analog Throttle Potentiometer Connector

For installations where two analog throttles are needed, a second 3-pin male Weather-Pack throttle connector is provided on the engine wiring harness. The adjustable 2-state throttle must be set in the "low speed" position for either analog throttle to work. The "Secondary" analog throttle can be used with or without the "Primary" analog throttle installed.

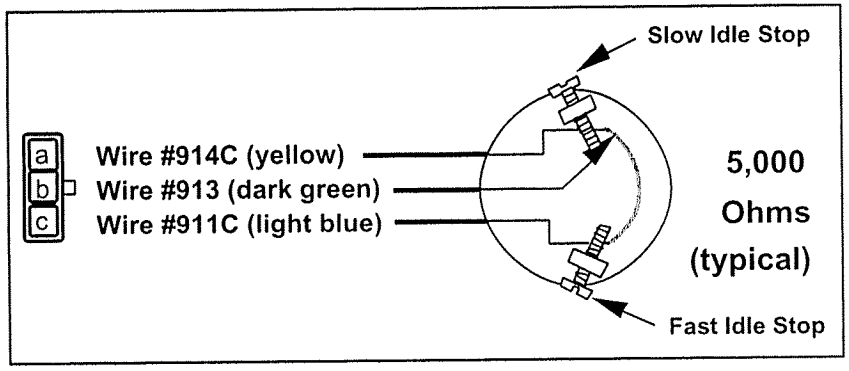

Figure AG-15 - 47, Secondary Analog Throttle Potentiometer

The second analog throttle feature is intended for use when a foot throttle and a hand throttle must both be provided. It can also be used when two throttle inputs are operated by the same lever or pedal for back-up purposes. When both analog throttles are used, the throttle signals will be additive, up to the factory preset fast idle setting or the maximum speed set with the adjustable 2-state throttle. There is no "dead band" in either throttle. When you move the foot throttle, speed immediately increases regardless of where the hand throttle is set.

The secondary analog throttle feature is not intended for use with two throttles located remotely from each other. Because the throttle signal is additive, if either throttle is at the full-speed position, the other throttle will have no control. Both throttles must be in the slow idle position for the engine to operate at slow idle.

For remote throttle applications, we suggest the use of the cruise control feature instead of the secondary throttle.

If used, the secondary analog throttle must be wired and adjusted exactly the same as the primary analog throttle. It can be used with the RE69667 potentiometer throttle or any similar unit.

Unlike the primary throttle, if the secondary throttle is not used, the special RE503681 throttle emulator is not required. To install a secondary analog throttle, unplug the dust cap provided with the wiring harness, and plug the throttle into the same connector. If a secondary throttle is not used, the dust cap should be left in place.

Katolight Service - Master Repair Manual - Page 2986

MAKING YOUR OWN ENGINE WIRING HARNESS

The engine wiring harness connects the ECU, all engine mounted sensors and actuators, the 21-pin instrumentation and controls connector, the alternator ignition wire, and the starter relay. To manufacture your own engine wiring harness you will need this document, a copy of the RE502338 ECU wiring diagram, and the latest manufacturing drawing of the standard John Deere wiring harness for your engine. Only the specified John Deere sensors can be used. Other sensors should not be applied.

We strongly recommend following the John Deere harness drawing as closely as possible, varying only cable lengths as needed to fit your installation. All cable lengths that connect engine-mounted components such as sensors and actuators must be exactly per the print. All connectors shown on the John Deere wiring harness drawing must be provided, including all diagnostic connectors and the CAN terminator connector. Please use the same wire colors and circuit numbers shown on the print, so service technicians will be able to trouble-shoot the system using our standard procedures and manuals. We strongly recommend that you use the same 21-pin connector used on the John Deere harness for your instrument panel connector. Not only will that facilitate service, but many of our customers find it very useful to be able to plug in one of our standard instrument panels for diagnostic and experimental purposes. Starter relay connections are included in our harness, but you can operate the starter relay separately from the engine harness if you prefer. You can also bring 12 V power to your key switch separately from the engine wiring harness if needed, to carry high accessory loads. However, the main engine power connections must be made directly to the battery (not the starter terminal) through the unterminated battery connection circuits shown on the John Deere wiring harness drawing. Other unterminated wires shown on the John Deere wiring harness drawing are optional and can be left out if not used. Please refer to the Instrumentation and Controls wiring section of this document for operating and wiring details of each circuit.

Katolight Service - Master Repair Manual - Page 2987

REFERENCE INFORMATION

"Metri-Pack" and "Weather Pack" connectors are products of the Packard Electronics Division of Delphi Automotive Systems.

Delphi Automotive Systems
Worldwide Headquarters, United States & Canada Headquarters
One Pontiac Plaza
Pontiac, Michigan 48340-2952
USA
Toll Free: [1] 888.255.7179
Tel: [1] 810.857.4323
Fax: [1] 810.857.4248
web: http:\\www.delphiauto.com/electric/

Delphi Automotive Systems
Asia Pacific Headquarters
1-1-110 Tsutsujigaoka
Akishima-shi, Tokyo 196
Japan
Tel: [81] 425.49.7200
Fax: [81] 425.42.3018
Delphi Automotive Systems
European Headquarters
117 Avenues des Nations, BP 60059
Zac Paris Nord II
95972 Roissy Charles de Gaulle Cedex
France
Tel: [33] 1.4990.4990
Fax: [33] 1.4990.4950

Delphi Automotive Systems
Mexico & South American Headquarters
Av. Goiás, 1820
São Caetano do Sul
São Paulo 09550-050
Brasil
Tel: [55] 11.741.9500
Fax: [55] 11.741.9599

For information on SAE J1939 CAN standards contact:

Society of Automotive Engineers (SAE)
400 Commonwealth Drive
Warrendale PA 15097-0001
USA
Tel: 412-776-4841
Fax: 412-776-5760
Email: isales@sae.org
web: http:\\www.sae.org/

Electronic Throttle Manufacturers:

Teleflex Morse Electrical Systems
(formerly Morse Controls)
6980 Professional Parkway East
Sarasota, FL 34240

Tel: 941-907-1000
Fax: 941-907-1020
web: http://www.tflx.com
Technical Support: techsupport@tflx.com

SAE 1939 Cable Manufacturer:

Champlain Cable
175 Hercules Drive
Colchester, Vermont 05446
Tel: 800-451-5162
Fax: 802-654-4224
web: http:\\www.champcable.com

Katolight Service - Master Repair Manual - Page 2988

WOODWARD

Installation and Operation Manual



L-Series Integrated Speed Control

Manual 26250A

WARNING

Read this entire manual and all other publications pertaining to the work to be performed before installing, operating, or servicing this equipment. Practice all plant and safety instructions and precautions. Failure to follow instructions can cause personal injury and/or property damage.

The engine, turbine, or other type of prime mover should be equipped with an overspeed shutdown device to protect against runaway or damage to the prime mover with possible personal injury, loss of life, or property damage.

The overspeed shutdown device must be totally independent of the prime mover control system. An overtemperature or overpressure shutdown device may also be needed for safety, as appropriate.

CAUTION

To prevent damage to a control system that uses an alternator or battery-charging device, make sure the charging device is turned off before disconnecting the battery from the system.

Electronic controls contain static-sensitive parts. Observe the following precautions to prevent damage to these parts.

- **Discharge body static before handling the control (with power to the control turned off, contact a grounded surface and maintain contact while handling the control).**
- **Avoid all plastic, vinyl, and Styrofoam (except antistatic versions) around printed circuit boards.**
- **Do not touch the components or conductors on a printed circuit board with your hands or with conductive devices.**

IMPORTANT DEFINITIONS

WARNING—indicates a potentially hazardous situation which, if not avoided, could result in death or serious injury.

CAUTION—indicates a potentially hazardous situation which, if not avoided, could result in damage to equipment.

NOTE—provides other helpful information that does not fall under the warning or caution categories.

Revisions—Text changes are indicated by a black line alongside the text.

Woodward Governor Company reserves the right to update any portion of this publication at any time. Information provided by Woodward Governor Company is believed to be correct and reliable. However, no responsibility is assumed by Woodward Governor Company unless otherwise expressly undertaken.

© Woodward 2004
All Rights Reserved

Contents

REGULATORY COMPLIANCE NOTES AND WARNINGS IV

ELECTROSTATIC DISCHARGE AWARENESS V

CHAPTER 1. GENERAL INFORMATION 1
Purpose and Scope 1
How to Use This Manual 1
Intended Applications 1
Introduction 1
Basic Control Options 3
Programmable Features 3
Service Tool Software 4

CHAPTER 2. MECHANICAL INSTALLATION 5
Introduction 5
General Installation, Operation Notes and Requirements 5
Unpacking 6
Mechanical Installation 6

CHAPTER 3. ELECTRICAL INSTALLATION 14
Introduction 14
Shielded Wiring 14
Description of Electrical I/O 17

CHAPTER 4. DESCRIPTION OF OPERATION 26
General 26
System Operation 27
Starting the Engine 27
Control Features Description 27
Speed Control Functions 28
Speed Control Dynamics 34
Start Fuel Limiting 36
Runtime Fuel Limiting 37
Temperature Sensing 39
Current Limiting based on Temperature 39
Control Modes 40
Fault Detection and Annunciation 41
Faults 41

CHAPTER 5. SERVICE TOOL 45
Introduction 45
Description 45
Getting Started 47
Monitoring the Driver 48

CHAPTER 6. CONFIGURATION 55
Overview 55
Configuration Parameters 56
Configuration Checks 78

CHAPTER 7. SETUP AND TUNING 81
Introduction 81
Tuning the Speed PID 81
Tuning the Position PID 83
Position Calibration and Verification 84
Calibration Sequence Overview 85
Position Verification 86

Katolight Service - Master Repair Manual - Page 2991

Contents

CHAPTER 8. TROUBLESHOOTING 90
Introduction 90
General System Troubleshooting Guide 91
Engine/Generator Troubleshooting 91
Troubleshooting Diagnostic Fault Flags 95
Electrical Troubleshooting Guide 99

CHAPTER 8. SERVICE OPTIONS 101
Product Service Options 101
Returning Equipment for Repair 102
Replacement Parts 103
How to Contact Woodward 103
Engineering Services 104
Technical Assistance 105

APPENDIX A. ACRONYMS/ABBREVIATIONS 106

APPENDIX B. L-SERIES CONTROL SPECIFICATIONS 107

Katolight Service - Master Repair Manual - Page 2992

Illustrations and Tables

Figure 2-1. Linkage Design Examples 8
Figure 2-2. L-Series Outline Drawing 9
Figure 2-3. L-Series Cover Types 10
Figure 2-4a. L-Series Shaft Types 11
Figure 2-4b. L-Series Shaft Types 12
Figure 2-4c. L-Series Shaft Types 13
Figure 3-1a. Typical L-Series Speed Control Application Wiring 16
Figure 3-1b. L-Series Speed Control Connector Pin Arrangement 17
Figure 3-2. Correct and Incorrect Wiring to Power Supply 18
Figure 3-3. MPU Speed Sensing Input 19
Figure 3-4. Ignition Speed Sensing Input 20
Figure 3-5. TPS Output 21
Figure 3-6. Relay Driver Output 22
Figure 3-7. Typical AUX Input Usage 24
Figure 3-8. Ground Junction Point 25
Figure 4-1 Overview of L-Series Inputs/Outputs 28
Figure 4-2. 5% Droop Example 32
Figure 4-3 Remote Speed Setpoint 33
Figure 4-4. Dual Gain Settings 35
Figure 4-5. Single Start Fuel Limit 36
Figure 4-6. Dual Start Fuel Limiters 37
Figure 4-7. Boost (External) Fuel Limit Curve 38
Figure 4-8. Runtime Fuel Limit Curve 39
Figure 5-1. Example Service Tool Screen 45
Figure 5-2a. Programming Harness Connections 46
Figure 5-2b. Programming Harness Wiring 47
Figure 5-3. Service Tool—Overview Tab 49
Figure 5-4. Service Tool—Alarms Tab 51
Figure 5-5. Service Tool—Shutdowns Tab 52
Figure 5-6. Service Tool—Internal Shutdowns Tab 52
Figure 5-7. Service Tool—Simulated I/O Tab 53
Figure 5-8. Service Tool—Identification Tab 54
Figure 6-1. Configuration Selection Options 56
Figure 6-2. Configuration Editor—OVERVIEW TAB 57
Figure 6-3. Configuration Editor—SETPOINT TAB 59
Figure 6-4. Configuration Editor—CONTROL TAB 61
Figure 6-5. Configuration Editor—Modifiers Tab 65
Figure 6-6. Configuration Editor—Fuel Limiting Tab 67
Figure 6-7. Configuration Editor—Dynamics Tab 69
Figure 6-8. Configuration Editor—Discrete I/O Tab 72
Figure 6-9. Configuration Editor— Alarm/Shutdown Tab 74
Figure 6-10. Configuration Editor—Security Tab 76
Figure 6-11. Security Tab Set Password Pop-up 77
Figure 6-12. Password Entry Prompt 77
Figure 7-1. Service Tool–Speed Dynamics 82
Figure 7-2. Speed Input Window 83
Figure 7-3. Service Tool–PID Tuning Window 84
Figure 7-4. Service Tool–PID Tuning Properties Window 84
Figure 7-5. Service Tool–Manual Position Calibration selection 85
Figure 7-6. Service Tool—Verify Position Calibration 86
Figure 7-7. Service Tool—Manual Position Calibration 87
Figure 7-8. Service Tool—Manual Position Calibration Settings 88
Figure 7-9. Service Tool–Auto Position Calibration 89
Figure B-1. Bode Plot of L-Series Response 111

Katolight Service - Master Repair Manual - Page 2993

Regulatory Compliance Notes and Warnings

The L-Series is suitable for use in Class I, Division 2, Groups A, B, C, D per CSA for Canada and U.S. or non-hazardous locations only.

Wiring must be in accordance with North American Class I, Division 2 wiring methods as applicable, and in accordance with the authority having jurisdiction.

Field wiring must be suitable for at least 105 °C.

The actuator should be protected from exposure to sunlight and rain.

These listings are limited only to those units bearing the CSA agency identification.



WARNING

Explosion hazard–Do not connect or disconnect while circuit is live unless area is known to be non-hazardous.

Explosion Hazard–Substitution of components may impair suitability for Class I, Division or Zone applications.



AVERTISSEMENT

Risque d'explosion–Ne pas raccorder ni débrancher tant que l'installation est sous tension, sauf en cas l'ambiance est décidément non dangereuse.

Risque d'explosion–La substitution de composants peut rendre ce matériel inacceptable pour les emplacements de Classe I, applications Division ou Zone.

Katolight Service - Master Repair Manual - Page 2994

Electrostatic Discharge Awareness

All electronic equipment is static-sensitive, some components more than others. To protect these components from static damage, you must take special precautions to minimize or eliminate electrostatic discharges.

Follow these precautions when working with or near the control.

1. Before doing maintenance on the electronic control, discharge the static electricity on your body to ground by touching and holding a grounded metal object (pipes, cabinets, equipment, etc.).

2. Avoid the build-up of static electricity on your body by not wearing clothing made of synthetic materials. Wear cotton or cotton-blend materials as much as possible because these do not store static electric charges as much as synthetics.

3. Keep plastic, vinyl, and Styrofoam materials (such as plastic or Styrofoam cups, cup holders, cigarette packages, cellophane wrappers, vinyl books or folders, plastic bottles, and plastic ash trays) away from the control, the modules, and the work area as much as possible.

4. Do not touch the electrical conductors, the connectors, or the components with conductive devices or with your hands.



CAUTION
To prevent damage to electronic components caused by improper handling, read and observe the precautions in Woodward manual 82715, *Guide for Handling and Protection of Electronic Controls, Printed Circuit Boards, and Modules*.

Katolight Service - Master Repair Manual - Page 2995

Katolight Service - Master Repair Manual - Page 2996

Chapter 1.
General Information

Purpose and Scope

The purpose of this manual is to provide the necessary background information for applying the L-Series integrated speed control to diesel and gas/gasoline reciprocating engines. Topics covered include mechanical installation, electrical wiring, software programming, and troubleshooting. While this manual is primarily targeted at OEM customers, OEMs themselves may find it useful to copy some of the information from this manual into their application user manuals.

How to Use This Manual

The following summarizes how to install an L-Series speed control into a new or existing system:

- Unbox and inspect the hardware.
- Mount and wire the hardware following the procedures and recommendations in Chapters 2–3.
- Configure the control using the Service Tool (Chapter 6). Not required if pre-configured by OEM.
- Stroke the valve and verify/tune dynamics and functionality (Chapter 7). Not required if set up by OEM.
- Troubleshooting guidelines are provided in Chapter 8.
- Specifications are provided in Appendix B.

Intended Applications

The L-Series speed control is a suitable replacement for mechanical systems that need more flexibility in control strategy, like dual dynamics, idle rated dynamics, and gain curves. The L-Series control is designed for industrial applications ranging from generators and mechanical drives to pumps and compressors.

Key environmental characteristics of these applications include extended industrial operating temperatures (–40 to +105 °C/–40 to +221 °F), industrial EMC requirements, electrical transients, and lower operating voltages (12/24 V).

The L-Series is CSA approved for Class I, Division 2, Groups A, B, C and D hazardous locations and is designed for on-engine mounting.

Introduction

The Woodward L-Series combines the L-Series electric actuator with integrated speed control software to control the speed of a diesel or gaseous engine. The L-Series is a microprocessor-based control that is incorporated into the actuator, creating a single integrated package. This eliminates the need for an additional driver box and speed control box.

Katolight Service - Master Repair Manual - Page 2997

The control uses state-of-the-art speed sensing and control algorithms. The L-Series also performs comprehensive diagnostics for easy troubleshooting. It can be configured and tuned using the L-Series Service Tool.

The L-Series provides a building block approach to total engine management. The modular bi-directional actuator design easily attaches to fuel pumps, mixers, or throttle bodies. For information on Woodward throttle body applications, refer to manual 26249 (ITB and LC-50).

Woodward also offers L-Series actuator versions for Position Control and Process Control, like Air/Fuel Ratio control, applications. Refer to manuals 26237 (Position Control) or 26251 (Process Control).

The L-Series speed control accepts a speed signal (ignition or MPU), compares this to the speed setpoint, and drives the 0–60 degree output shaft to the commanded position based on an internal shaft position sensor. The high-efficiency torque motor delivers 0.34 N·m (0.25 lb-ft) nominally over 60° travel range to operate fuel or air control devices. See the specifications (Appendix B) for more details.

There are 4 AUX inputs for I/O functions, configurable as digital inputs, analog inputs, or RS-232 Service Tool communications. The functions available for AUX input configuration are:.

- Isochronous Loadsharing analog input
- Remote Speed Setpoint analog input
- MAP/Boost Fuel limit analog input
- Rated 1 / Rated 2 (50/60 Hz) digital input
- Raise Speed Setpoint digital input
- Lower Speed Setpoint digital input
- Isoch/Droop digital input
- Idle/Rated digital input
- Alternate Dynamics digital input
- Run Enable digital input

For status purposes, a relay driver output is available on the L-Series control which changes state whenever a fault or error condition is experienced by the L-Series control.

If the system so requires, the L-Series provides a direct position output signal in the form of a dc voltage. The throttle position (TPS) output represents full counterclockwise (CCW) to clockwise (CW) rotation of the actuator shaft, and thus gives the operator an external position indication after installation and while the unit is operating.



WARNING

When included with an ITB, the actuator depends solely on the return spring inside the throttle body assembly to drive toward minimum fuel when not powered. Therefore other positive shutdown devices like fuel shut-off solenoids are recommended to ensure shutdown on loss of signal to the control system. Also, separate overspeed trip devices are always mandatory.

Katolight Service - Master Repair Manual - Page 2998

Basic Control Options

Position control with software support for:
- CW / CCW (clockwise/counterclockwise) direction control
- Field calibration options

Speed control with software selectable:
- Speed setpoints
- Dynamics
- Fuel Limiting
- Start / Stop behavior
- Input/Output definitions

WARNING
The actuator must be properly set up using the L-Series Service Tool prior to starting the prime mover.

NOTE
The Service Tool is not included, but can be downloaded from the Woodward Internet website (www.woodward.com/software).

Programmable Features

Control setup and tuning is accomplished through the use of a PC (personal computer), Woodward Service Tool software, and a programming harness. The features identified below are described in Chapters 2 and 4. Briefly, the programmable features include:
- Speed Signal Setup Parameters
- General Setup Parameters
  - Fail Direction (CCW or CW)
  - Min Position Direction (CCW or CW)
- Valve Position Control Parameters
- Speed Setpoint Setup Parameters
  - Functionality Settings
  - Idle/Rated 1/Rated 2 Speed Settings
  - Acceleration and Deceleration Rates
  - Droop / Isoch
  - Biasing Behavior and Rates
- Speed Control Setup Parameters
  - Behavior
  - Start Speed settings and Rates
  - Engine Stopping Settings
  - Speed Error Detection Settings
  - Dynamics Settings
- Fuel Limiting
  - Behavior
  - Settings and Rates
- Discrete Output Settings
- Discrete Input Settings
- Fault Settings
- Security Settings

Katolight Service - Master Repair Manual - Page 2999

Service Tool Software

The L-Series Service Tool software is a Microsoft Windows® based GUI (graphic user interface). The Service Tool Software is compatible with Windows 95/98/NT/2000/Me/XP and gives the OEM the ability to:

- Configure product settings based on application requirements
- Tune the control with the engine running during application development
- Create configuration files for downloading into multiple controls
- Download configuration files
- Extract and view fault codes for field diagnosis
- Update control dynamics during field service
- Calibrate the control for user stops

In addition, the Service Tool can be configured to incorporate security to control access to and protect application settings where needed.

Detailed descriptions of software features and installation are available in Chapters 4–7.

Katolight Service - Master Repair Manual - Page 3000

Chapter 2.
Mechanical Installation

Introduction

This chapter provides instructions on how to mount and connect the L-Series control into a system. Hardware dimensions are provided for mounting the device to a specific application.

WARNING
Due to typical noise levels in turbine or engine environments, hearing protection should be worn when working on or around the L-Series.

Burn Hazard—The surface of this product can become hot enough or cold enough to be a hazard. Use protective gear for product handling in these circumstances. Temperature ratings are included in the specification section of this manual.

CAUTION
Explosion Hazard—External fire protection is not provided in the scope of this product. It is the responsibility of the user to satisfy any applicable requirements for their system.

CAUTION
Due to the hazardous location listings associated with this product, proper wire type and wiring practices are critical to operation.

Do not connect any cable grounds to "instrument ground", "control ground", or any non-earth ground system. Make all required electrical connections based on the wiring diagrams (Figure 3-4).

WARNING
Explosion hazard–Do not connect or disconnect while circuit is live unless area is known to be non-hazardous.

Explosion Hazard–Substitution of components may impair suitability for Class I, Division or Zone applications.

General Installation, Operation Notes and Requirements

WARNINGS
Use an independent device for positive shutdown, such as a fuel shut off valve is highly recommended. Failure to comply with this recommendation can cause personal injury and/or property damage.

Use of an external spring to return to minimum fuel is highly recommended. Failure to comply with this recommendation can cause personal injury and/or property damage.

Use of a predicted min fuel shutdown procedure is highly recommended. Failure to comply with this recommendation can cause personal injury and/or property damage.

Katolight Service - Master Repair Manual - Page 3001

Unpacking

Be careful when unpacking the actuator. Check the unit for signs of damage, such as bent or dented panels, scratches, and loose or broken parts. Notify the shipper and Woodward if damage is found.

Mechanical Installation

Mounting Location

Locate the L-Series control a distance from sources of extreme radiant heat, such as exhaust manifolds or turbochargers. The operating temperature range of the control is –40 to +105 °C (–40 to +221 °F). In spark-ignited applications, make sure the L-Series is located away from the ignition coil, and that harness wires are not routed next to the spark plug wires.

As shown in the specifications, the L-Series control has been designed for and verified to a given accelerated life vibration test level at the mounting surface of the actuator. The user should be aware that in any application, bracket design can significantly change the vibration levels at the actuator. Therefore, every effort should be made to make the bracket as stiff as possible so that engine vibrations are not amplified, creating an even more severe environment at the actuator. Additionally, when possible, orienting the actuator shaft parallel to the crankshaft of the engine will often reduce the vibration load on the actuator's rotor system in reciprocating engine applications.

Mounting the L-Series Actuator with an ITB

Typical mounting of a L-Series actuator with an ITB is accomplished by fastening the throttle to the inlet and outlet pipes. Ensure that the pipes can support the weight of the L-Series actuator and the throttle body.

Output Shaft

The L-Series actuator has 58–62° of available travel. The max fuel direction of this travel is software configurable in the clockwise or counterclockwise direction through the Service Tool.

Mounting Orientation

While it is not a requirement, it is good practice to orient the connector feature on the control in a horizontal or downward orientation to minimize fluid accumulation between the enclosure and the mating connector’s gasket.

Actuator Configuration

The L-Series actuator utilizes a 2.0” (50.8 mm) square mounting bolt pattern and is intended to fit within an envelope of 2.618 x 2.618 x 2.540” (66.50 x 66.50 x 64.52 mm) with the short dimension along the shaft axis. Two shaft seal configurations are available, an internal lip seal and an external lip seal with spring backup (Figure 2-3). In addition, six independent output shaft configurations are available (Figure 2-4). Consult Woodward applications engineering for the application appropriate seal and shaft configuration.

Mounting Hardware

Use M5 or #10 fasteners torqued to 4 N·m (35 lb-in) to attach the L-Series control to the mounting bracket. The bracket and attaching hardware must be designed to hold the weight and to withstand the vibration associated with prime mover mounting. Use the appropriate fasteners for securing the mounting bracket to the engine.

Katolight Service - Master Repair Manual - Page 3002

Mechanical (Fuel Position) Stops

Diesel Stops—Diesel installations will generally use the fuel system minimum and maximum position stops. Diesel engine applications are normally designed to provide the minimum and maximum stops without binding. The actuator's stops must not prevent the actuator from driving the fuel linkage to the minimum and maximum positions. The linkage should be designed to use as much actuator travel as possible, without preventing minimum and maximum fuel positions.

Gas Engine Stops—Butterfly valves in carburetors will often bind if rotated too far toward minimum or maximum. For this reason, hard stops in the throttle body or associated linkage should be used at both minimum and maximum positions. The engine must always shut down when the actuator is at the minimum stop.

Linkage

Proper design and installation of the linkage from the actuator to the engine is necessary for the unit to provide the best control possible. The characteristics of the engine fuel system and the control dictate the linkage design. Most diesel fuel pumps have a linear relationship between metering valve or fuel rack position and the amount of fuel delivered to the engine. Throttle bodies have a non-linear relationship between throttle angle and air/fuel flow. Because the L-Series is a linear control, a linkage designed for diesel applications tends to maintain a 1:1 relationship between actuator shaft angle and rack position throughout the range of travel. A linkage designed for gas or gasoline applications tends to start with a 3:1 relationship transitioning to a 1:3 relationship between actuator shaft angle and throttle angle throughout the range of travel. This non-linear linkage design essentially compensates the throttle body so the air/fuel flow looks linear from the control's perspective. Woodward recommends that linkages use approximately 40 degrees of actuator shaft rotation, centered in the full 60-degree range. This maximizes the resolution of the actuator control loop, making the engine easier to govern. Refer to Figure 2-1 for examples of typical linkage designs.

To increase the amount of actuator rotation, move the rod end closer to the actuator shaft or farther away from the shaft controlling the fuel flow. To decrease the amount of actuator rotation, move the rod end farther from the actuator shaft or closer to the throttle shaft.

Once installed, manually stroke the fuel-control linkage from stop to stop as if the actuator were moving it. The linkage must move freely, without friction and backlash. Lubricate or replace worn linkage or fuel control parts as required.

Always make sure the fuel delivery device (fuel pump or throttle body) has a return spring that pulls towards minimum fuel when no power is applied to the control. Size the return spring so that the actuator output shaft sees no more than 0.07 N·m (0.05 lb-ft) of torque at maximum loading conditions.

In addition to a return spring, always make sure the application includes a secondary overspeed protection device as a backup to the main governor's overspeed detection function.



CAUTION

The actuator's maximum slew rate can place stress on the fuel system stops and on the linkage between the actuator and the fuel system. The maximum actuator speed is 1100 degrees per second in both increase and decrease fuel directions under normal operating conditions. Exceeding the control input voltage requirements may cause a unit shutdown in which the actuator speed may exceed 3500 degrees per second.

Katolight Service - Master Repair Manual - Page 3003

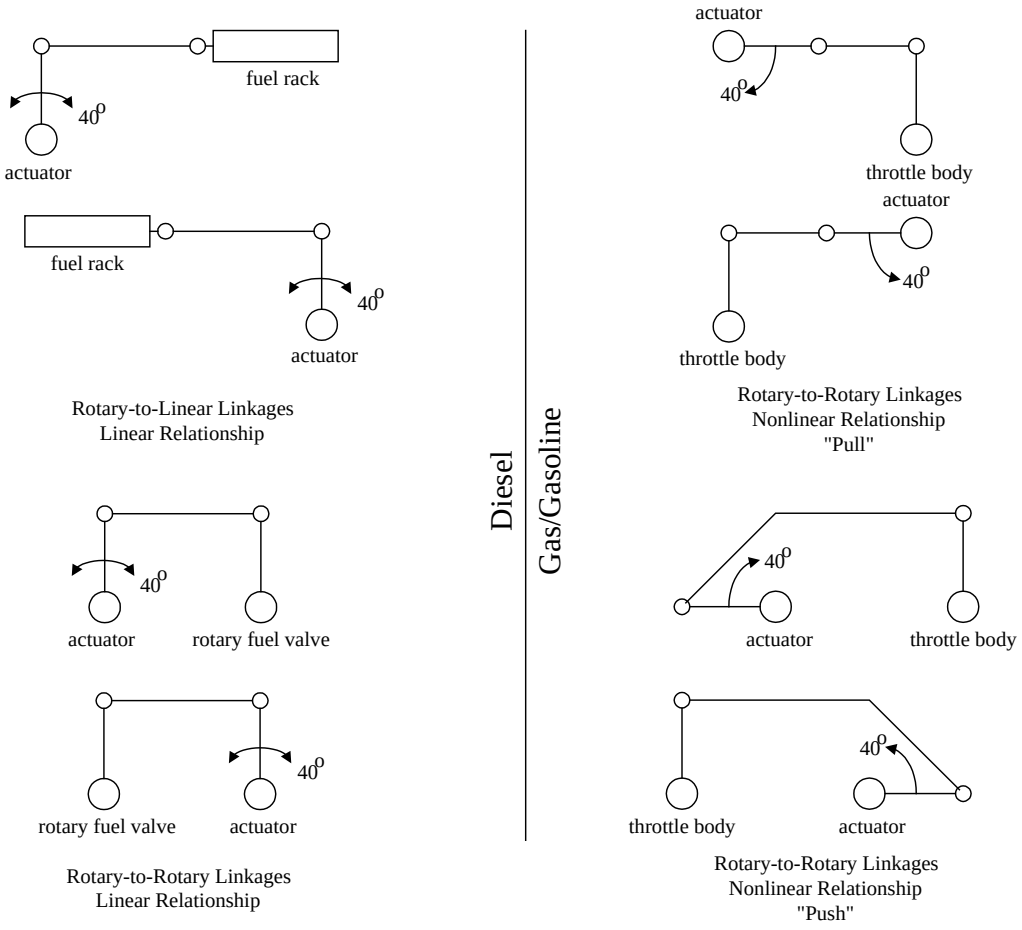

Figure 2-1. Linkage Design Examples

The Mass Moment of Inertia (MMOI) for the L-Series actuators is 1.48 E-5 kg-m² (1.57E-3 lb-in-s²). External fuel system stops should be used and must be adequate to absorb the actuator MMOI in addition to the linkage inertia without damage.

Use of good rod-end connectors with as little free play as possible is essential. Select rod ends that will remain tight and wear well during the nearly constant movement associated with precise speed control. The link connecting the actuator lever to the fuel-control lever must be short and stiff enough to prevent flexing while the engine is running.

Typically, in a linkage system, there may be links and levers which are supported by customer-supplied bearings. Additionally, there will typically be a section of the linkage where the mass is supported fully by the actuator output shaft. Minimizing the mass the actuator is required to support is essential in that excessive mass or vibration levels may damage the actuator's rotor system and shorten the life of the actuator.

Katolight Service - Master Repair Manual - Page 3004

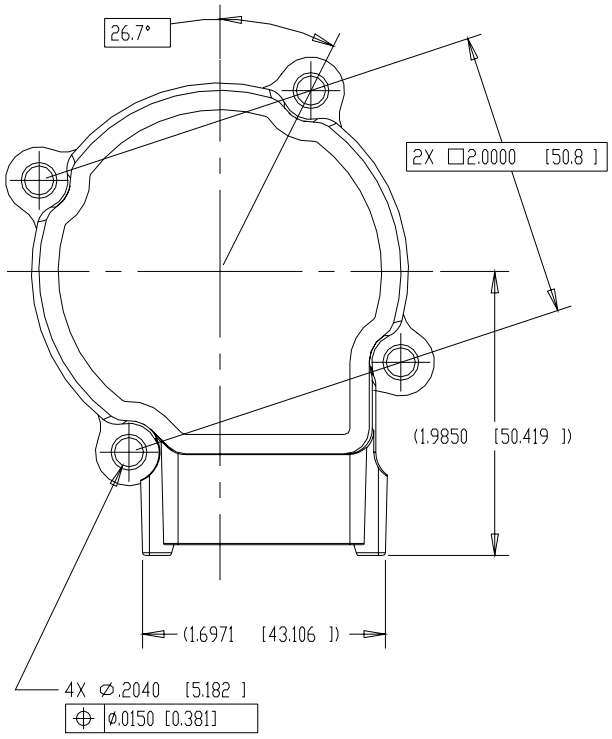

NOTES:

1. MOUNTING HARDWARE TO BE SOCKET HEAD CAP SCREWS -- #10(.190)-24, M5, OR EQUIVALENT. NO WASHERS TO BE USED. RECOMMENDED SCREW TORQUE = 35 IN-LB [4 N-M].
2. FOR BRACKET-MOUNT APPLICATION, A BRACKET OUT-OF-FLATNESS OF .010 [0.25] MAXIMUM IS RECOMMENDED.
3. FOR CONNECTOR INFORMATION, REFER TO CONNECTOR TABLE AND APPROPRIATE WIRING DIAGRAM.
4. USE OF INTERNAL ACTUATOR STOPS IN APPLICATION NOT RECOMMENDED. TORQUE AGAINST STOPS NOT TO EXCEED 200 IN-OZ.
5. DIMENSIONS ARE SHOWN IN INCHES [MM].
6. DETAILS SHOWN HERE ARE COMMON TO ALL ACTUATOR ASSEMBLIES. HENCE, NEITHER COVERS NOR SHAFTS ARE SHOWN IN THESE VIEWS. SEE COVER AND SHAFT DETAILS ELSEWHERE IN THIS MANUAL.

INTEGRATED DEUTSCH CONNECTOR (REF: DT04-12PA)		
ITEM	*RECOMMENDED*	*OPTIONAL*
MATING CONNECTOR	DT06-12SA-P012	DT06-12SA
SECONDARY LOCK	W12S-P012	W12S
SOCKETS	0462-201-16141	0462-201-16141
WIRING HARNESS STRESS RELIEF SUPPORT	WITHIN 16 INCHES FROM CONNECTOR	
NOTE: IN THE EVENT A WIRE IS NOT USED FOR EACH OF THE 12 PINS ON THE CONTROL, A DEUTSCH 114017 PLUG MUST BE USED IN PLACE OF EACH MISSING WIRE TO ENVIRONMENTALLY SEAL THE CONTROL.		

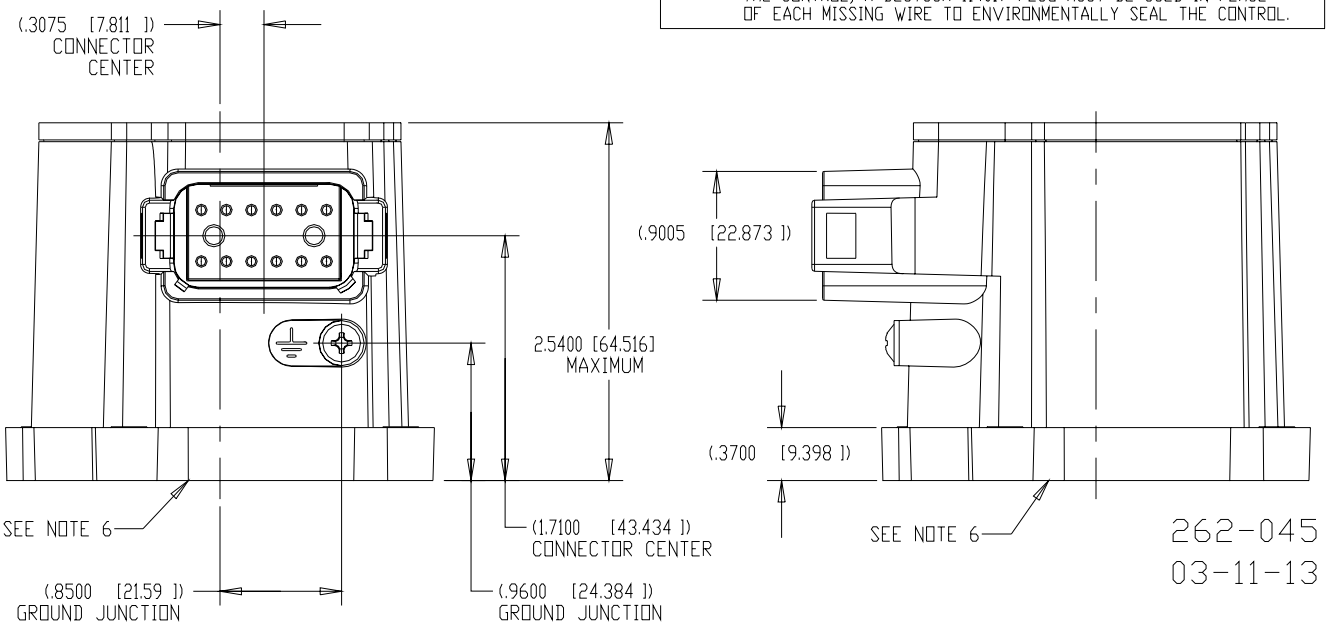

Figure 2-2. L-Series Outline Drawing

Katolight Service - Master Repair Manual - Page 3005

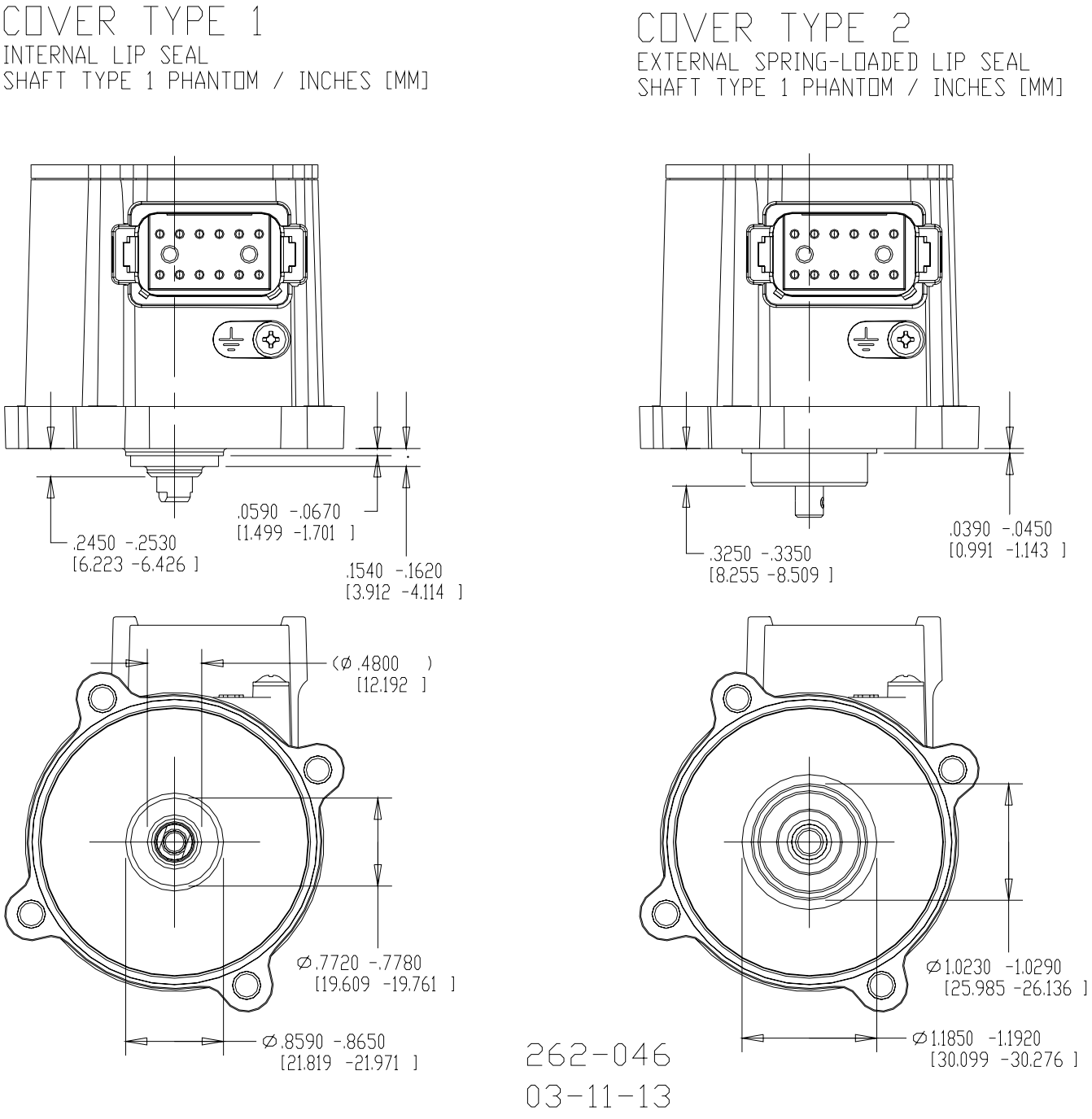

Figure 2-3. L-Series Cover Types

Katolight Service - Master Repair Manual - Page 3006

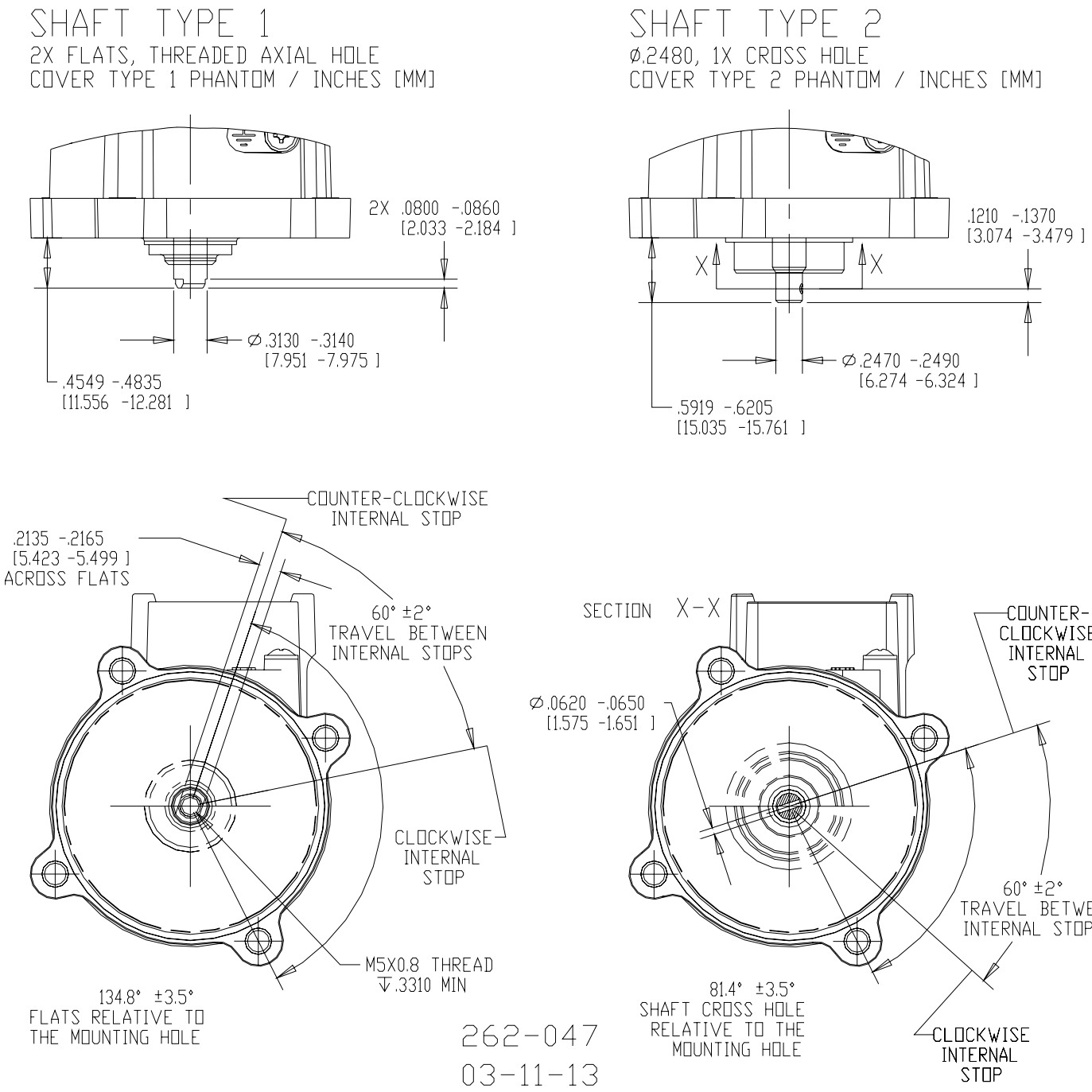

Figure 2-4a. L-Series Shaft Types

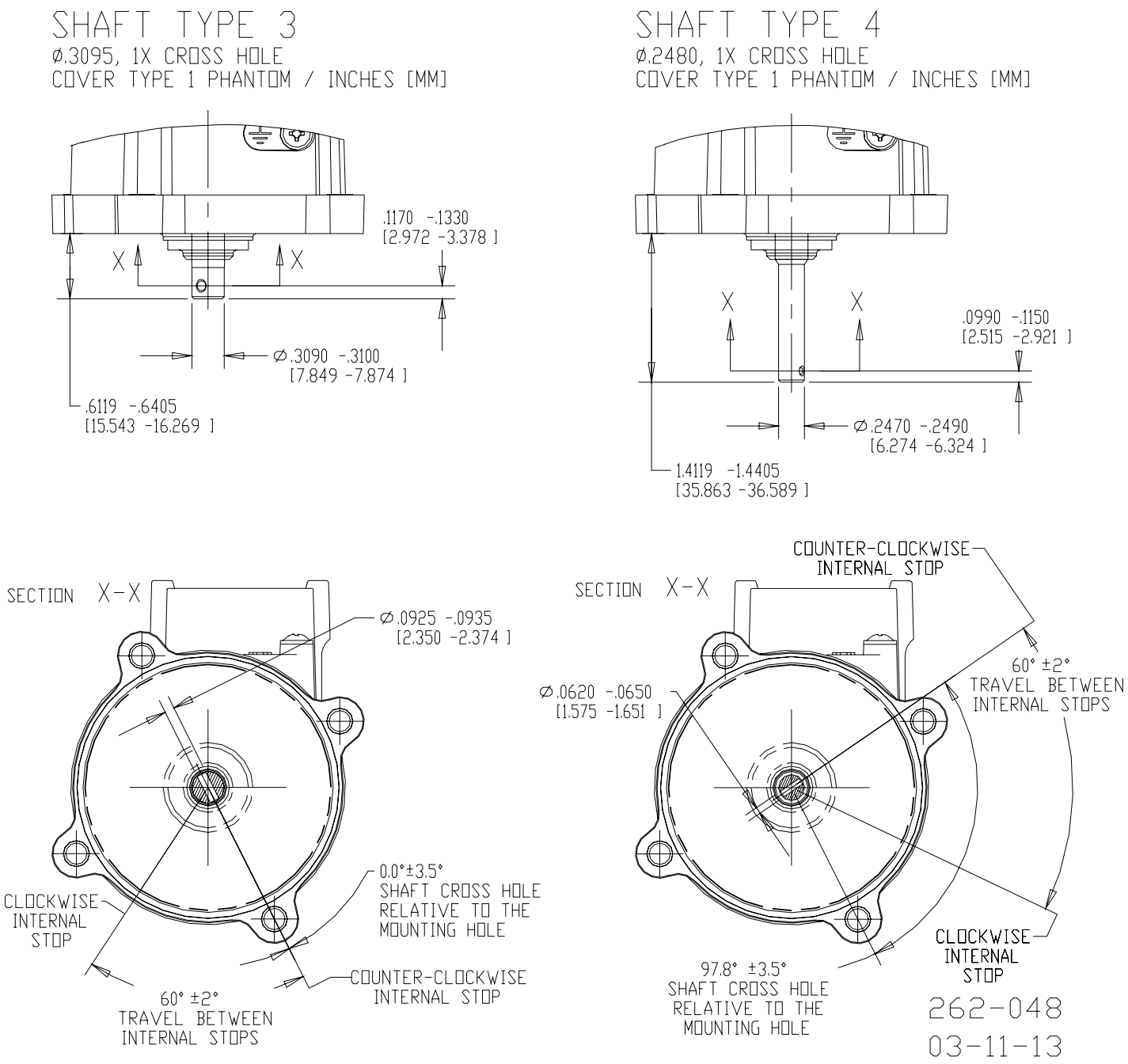

Figure 2-4b. L-Series Shaft Types

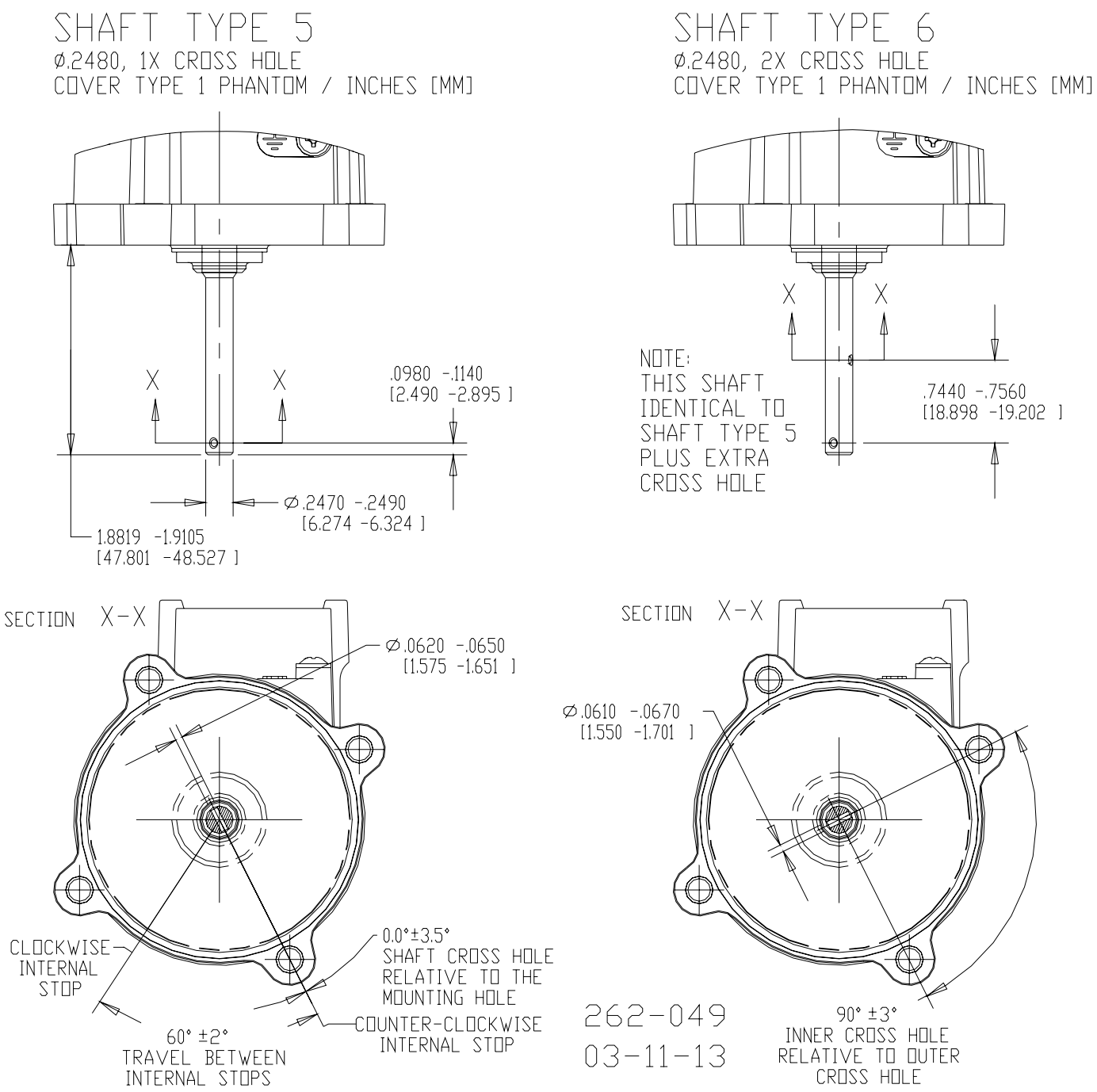

Figure 2-4c. L-Series Shaft Types

Chapter 3.
Electrical Installation

Introduction

This chapter provides instructions on how to connect the L-Series control into a system. A wiring pinout of the L-Series control, as viewed by looking into the control's connector feature, is shown in Figure 3-1. Typical connections to external devices are also shown.

The L-Series has an operating voltage range of 10 to 32 Vdc with nominal voltages of 12 or 24 Vdc. The power supply is reverse polarity protected, and consumes 32 W maximum power at a peak current of 1 A (32 V) assuming 4 Ω stator resistance at 25 °C. These assumptions are based on the fact that the software limits the power to the rotary actuator to 25 W at any given time and input voltage (in the valid range).

The control system should be protected with a 6 A fuse in the voltage supply lines. Typical max average current is 2.1 A, or max 25 W at 12 V. The application should be configured to turn on power to the actuator when the engine is first cranked.

Shielded Wiring

The use of cable with individually shielded-twisted pairs is required where indicated by the control wiring diagram (Figure 3-1). Cable shields must be terminated as indicated in the control wiring diagram using the installation notes described below. DO NOT attempt to directly ground the shield at both ends or an undesired ground loop condition may occur. If it becomes necessary to terminate the shield at the end opposite of the L-Series, it must be done through a high-frequency capacitor.

Installation Notes

- Wires exposed beyond the shield should be as short as possible, not exceeding 50 mm (2 inches).
- The shield termination wire (or drain wire) should be kept as short as possible, not exceeding 50 mm (2 inches), and where possible the diameter should be maximized.
- Installations with severe electromagnetic interference (EMI) may require additional shielding precautions. Contact Woodward for more information.

Failure to provide shielding can produce future conditions which are difficult to diagnose. Proper shielding at the time of installation is required to assure satisfactory operation of the product.

Katolight Service - Master Repair Manual - Page 3010

Electrical Connections

WARNING
Explosion hazard–Do not connect or disconnect while circuit is live unless area is known to be non-hazardous.

Explosion Hazard–Substitution of components may impair suitability for Class I, Division or Zone applications.

Prior to installation, refer to the wiring diagrams and the representative I/O interfaces schematic in this chapter. Also, review the hardware I/O specifications in Appendix B.

WARNING
The control will only meet ingress protection specifications while the Deutsch connector is installed in the unit. As such, the unit should not be exposed to operating environments unless the mating connector is installed. In addition, if a wire is not used for each of the 12 pins on the control, a Deutsch 114017 plug must be used in place of each missing wire. Failure to adhere to these guidelines may result in product failure or decreased life.

Use 1 to 1.5 mm² (16 to 18 AWG) stranded copper wire with insulation that meets temperature requirements in the harness design. A wiring harness stress relief within 400 mm (16”) of the control’s connector is recommended. Limit all I/O and signal lines to less than 30 m (98 ft). Also limit input power (B+/B–) connections to an earth grounded battery or conditioned power interface to less than 10 m (33 ft) from the L-Series product.

NOTE
A conditioned power interface is an interface which offers equivalent common mode and differential mode conditioning of that of a grounded 24 V lead acid battery.

Dress the harness with wire loom to contain it in a single bundle. Use grommets when passing the harness through metal panels.

Connector

The following Deutsch connector components are recommended for harness designs:

	Recommended	Optional
Mating Connector	DT06-12SA-P012	DT06-12SA
Secondary Lock	W12S-P012	N/A
Sockets	0462-201-16141	0462-201-16141

For convenience, Woodward part number 8928-396 is a kit that provides all the necessary Deutsch components.

CAUTION
Due to the hazardous location listings associated with this product, proper wire type and wiring practices are critical to operation.

Do not connect any cable grounds to “instrument ground”, “control ground”, or any non-earth ground system. Make all required electrical connections based on the wiring diagram (Figure 3-1a, 3-1b).

Katolight Service - Master Repair Manual - Page 3011

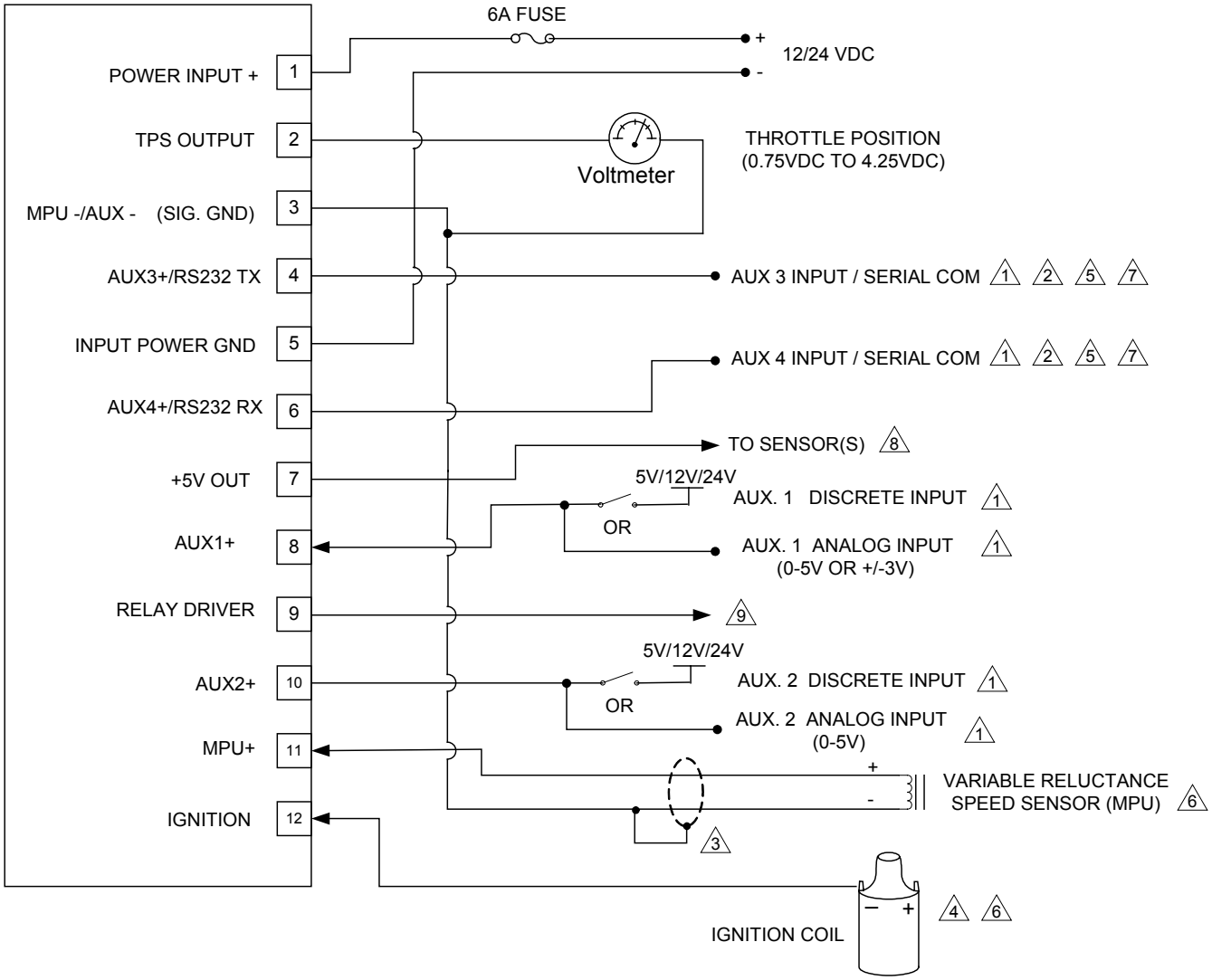

NOTES:

1. REFERENCE ALL DISCRETE AND ANALOG INPUTS TO PIN 3 (SIG.GND).
2. AUX.3 AND AUX.4 CAN ALSO BE CONFIGURED AS DISCRETE OR ANALOG INPUTS IN A SIMILAR MANNER AS AUX.1 AND AUX.2, BUT ARE NOT FUNCTIONAL WHILE SERIAL COMMUNICATIONS ARE CONNECTED.
3. ALL SHIELD TIES ARE TO BE *NO LONGER THAN 2"* BETWEEN THE CABLE AND GROUND.
4. IF USING IGNITION SPEED INPUT OPTION, CONNECT PIN 12 OF THE L-SERIES SPEED CONTROL TO THE NEGATIVE TERMINAL OF THE IGNITION COIL. THE IGNITION SYSTEM COMMON MUST BE REFERENCED TO THE L-SERIES SPEED CONTROL GROUND (PIN 3 OR PIN 5).
5. USE WOODWARD KIT 8923-1061 TO CONNECT TO A COMPUTER FOR USE WITH THE SERVICE TOOL.
6. SPEED INPUT IS ACCOMPLISHED BY USING EITHER THE MPU OR THE IGNITION INPUT. DO NOT CONNECT WIRES TO BOTH INPUTS SIMULTANEOUSLY.
7. WHEN CONFIGURED AS AN ANALOG INPUT, THE RANGE IS 0-5V.
8. THE 5V OUTPUT IS PROVIDED FOR POWERING EXTERNAL SENSORS. RATED AT 10mA MAX.
9. LOW-SIDE DRIVE OUTPUT DESIGNED TO DRIVE A RELAY, LAMP, OR OTHER STATUS INDICATOR. MAXIMUM CURRENT ALLOWED THROUGH THE COIL OR LAMP IS 500mA. MAXIMUM VOLTAGE ALLOWED AT THIS TERMINAL IS 32VDC.

Figure 3-1a. Typical L-Series Speed Control Application Wiring

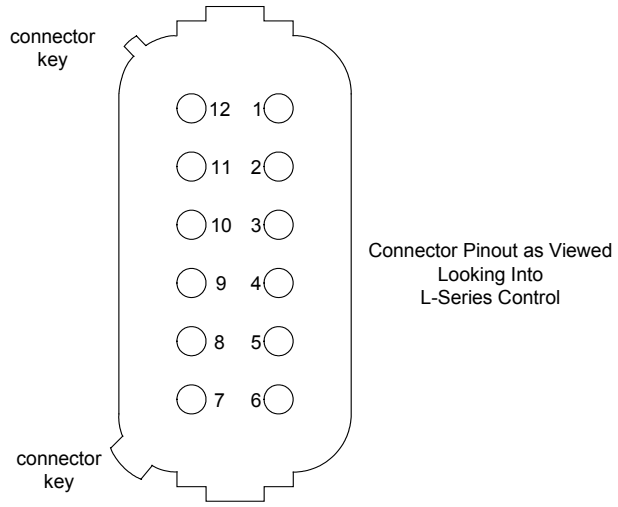

Figure 3-1b. L-Series Speed Control Connector Pin Arrangement

Connector Pin #	Description	Comment
1	+12V/24 Vdc Input Power	Supply power
2	TPS Signal Output	Direct position feedback output indication
3	AUX – (Sig Gnd)	Ground for AUX inputs
4	Aux Input 3 / RS-232 transmit	Combination Aux 3 and Service Tool input
5	Input Power Ground	Ground for the 12 V/24 V input power
6	Aux Input 4 / RS-232 receive	Combination Aux 4 and Service Tool input
7	5 V Out	Power for external sensors (10 mA max)
8	Aux Input 1	Aux1 input
9	Relay Driver Output	Status / fault detection output
10	Aux Input 2	Aux2 input
11	MPU +	MPU Speed signal input
12	Ignition Input	Ignition speed signal input

Description of Electrical I/O

Representative circuitry for the L-Series inputs/outputs is provided in Figure 3-5 below.

Power Supply Input (+12 Vdc/24 Vdc at pin 1, ground at pin 5)
The L-Series will handle a voltage range of 10 to 28 Vdc at full specified torque. The actuator is functional in the range of 8 to 32 Vdc, but accuracy and/or torque can be diminished at the extreme ends of this range.

The power supply terminals are reverse polarity protected, and in the case that a reverse polarity condition exists, the L-Series actuator will not power-up and will remain at the minimum stop if attached to a throttle body with an internal return spring.

Woodward recommends using a 6 A fuse on the power supply line feeding pin 1 of the L-Series actuator.

Katolight Service - Master Repair Manual - Page 3013

The supply voltage failure levels are below 6.25 V and above 33 V. The unit can be configured to either alarm or shut down upon detection of a supply voltage fault.

WARNING
The input power must be fused. Failure to fuse the L-Series could, under exceptional circumstances, lead to personal injury, damage to the control valve, and/or explosion.

Take special care when wiring the L-Series control.

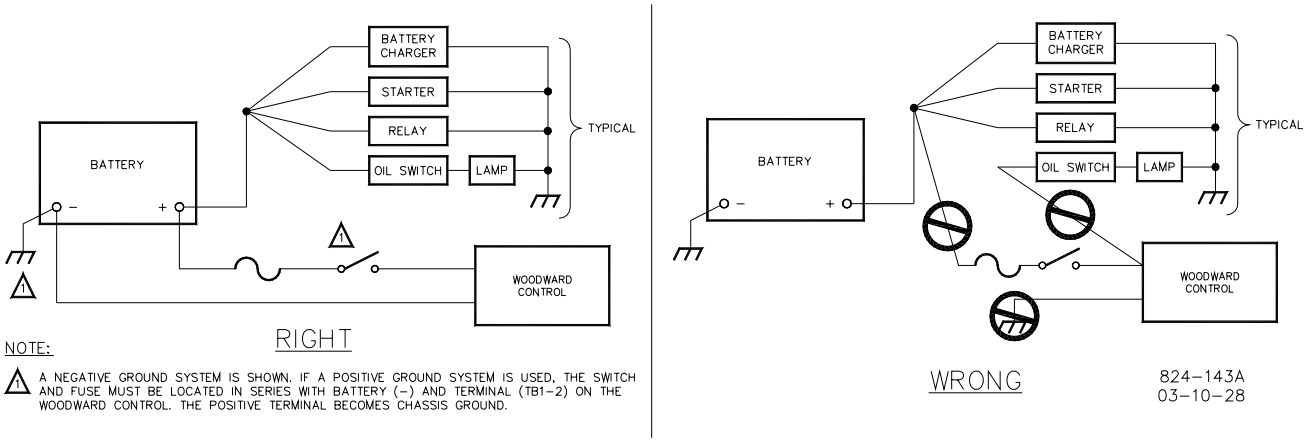

Figure 3-2. Correct and Incorrect Wiring to Power Supply

Ground Symbol Conventions



= **Internal Circuit Board Common**
Used to show equipotentials in electronic circuits, normally internal to a control system.



= **Earth Ground**
Represents a connection to “Earth” Ground.



= **Chassis Ground**
Sometimes used as symbol for system ground. Normally associated with connection to engine skid or vehicle frame. In the case of the L-Series, it also represents system ground.

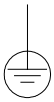

= **Protective Earth Ground**.
Normally used as a safety ground in high-voltage (> 42V) systems.
(Not applicable to L-Series Controls)

Katolight Service - Master Repair Manual - Page 3014

The control will continue to function down to a supply voltage of 8 V, to withstand a prime mover start from the same battery system, however the control will not function completely within specifications. During the low voltage, the L-Series will **not** meet the transient response times or the max torque output.

Speed Input
The L-Series speed input can be either from a magnetic pick-up (MPU) or from ignition system pulses. The input must be wired to the appropriate input and must be configured properly using the Service Tool prior to operation.

See Woodward manual 82510, *Magnetic Pickups and Proximity Switches for Electronic Controls*, for information about MPUs and installation of the pickup unit.

MPU Input (+MPU at pin 11, –MPU at pin 3)
The L-Series MPU input will accept speed signals from variable reluctance (VR) devices in the range of 1 Hz to 12 kHz. The acceptable amplitude range is from 1 to 42 Vrms.

This function expects engine speed pulses present on pins 11 (MPU+) and 3 (MPU–). The number of flywheel or gear teeth that pass the magnetic pickup for one crankshaft revolution must be programmed for proper speed signal detection.

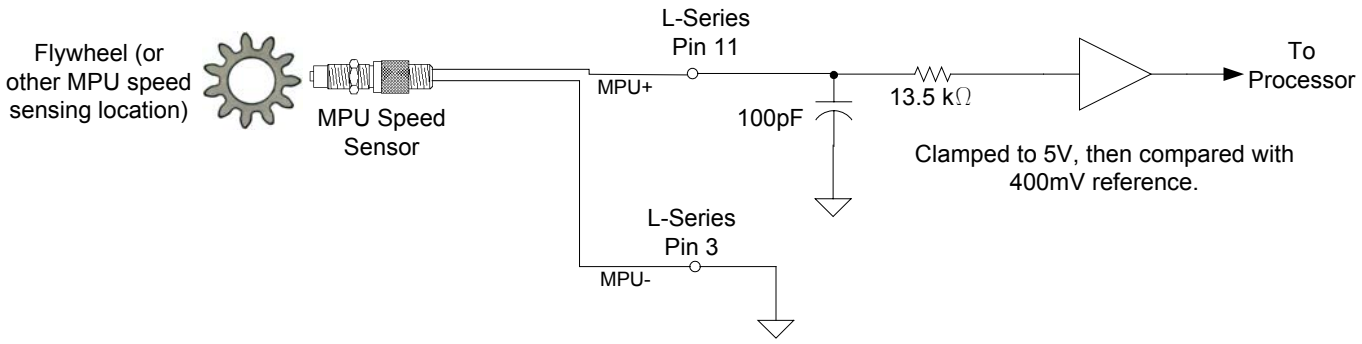

Figure 3-3. MPU Speed Sensing Input

IGN (ignition) Input (+IGN at pin 12, –IGN at pin 3)
The L-Series control will accept a 1–480 Hz signal from an ignition input of a 2- or 4-cycle 1–20 cylinder engine. For standard coil ignition, the source may be the negative terminal of the coil primary. For distributorless or DIS (Direct Ignition System) systems, the source for the ignition pulses may be two ignition leads from the spark control connected to IGN+ (pin 12) and IGN– (pin 3). Take care not to reverse IGN+/– on a DIS system, or no speed will be sensed.

This function requires engine speed pulses present on pin 12 (IGN) of the control. The type of engine (2-stroke or 4-stroke) and the number of cylinders (1 to 20) must also be programmed.

Katolight Service - Master Repair Manual - Page 3015

** This is a typical ignition input setup. For DIS applications, refer to instructions in text above.**

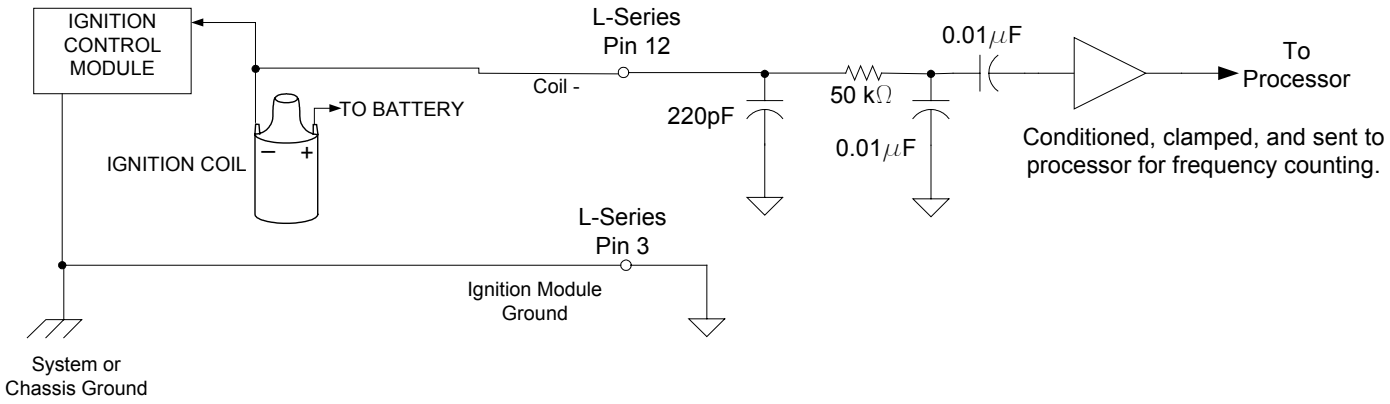

Figure 3-4. Ignition Speed Sensing Input

WARNING
It is recommended that the actual engine speed be used to externally verify that the speed command matches the command signal sent. Failure to comply with this recommendation can result in undetected system faults.

TPS Output (pin 2, referenced to either pin 3 or pin 5)
The L-Series provides a 0–5 V signal representing actual shaft rotational position, where 0.5 V and 4.5 V correspond to full counterclockwise to clockwise rotation, respectively. This signal is fed directly off the position sensor to ensure no delays are introduced by the processor. However, this signal is also uncorrected, so the difference between this signal and actual position can vary up to ±10% over the operating temperature range. This gives the end user an indication of throttle position.

NOTE
This output is meant for an approximate indication of shaft position only. The unconditioned output accuracy must be considered when using this signal externally. Refer to the specifications section for TPS accuracy.

WARNING
Do not try to inject signals *into* the TPS output, as it will negatively impact the performance of the L-Series actuator. This output is meant to be used with a high impedance device, such as a voltmeter. Do not tie pin 2 directly to battery or ground. If the application does not use this output, leave it open.

Katolight Service - Master Repair Manual - Page 3016

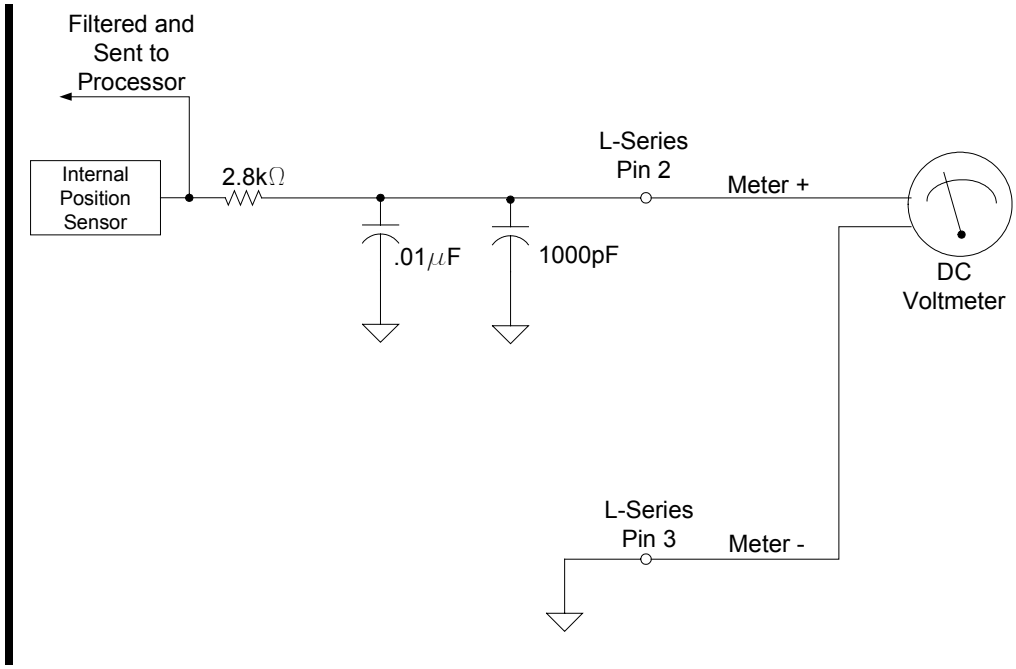

Figure 3-5. TPS Output

Relay Driver Output (pin 9)
A discrete output is provided to serve as a status indicator. This switchable discrete output is a closure to ground capable of sinking 250 mA with an output voltage rise of less than 1.5 V, and it is available to power external relays for devices such as alarms or fuel shutoff solenoids. The circuit is protected internally against over-current and inductive spikes, so external clamping is not necessary.

This output can be configured to be either normally on/closed (preferred failsafe setting) or normally off/open. In addition, the faults that drive the relay status can be configured individually. For details, refer to Chapter 4 (Service Tool). By default, this circuit will be configured in a failsafe manner, meaning it will be active (conducting) when no fault exists, but if power is lost or a fault is detected by the L-Series actuator, the circuit will open. See Figure 3-6 below for typical usage of this feature.

There are two conditions that will prevent the discrete output from operating correctly. The first is if battery positive is accidentally connected to it, and the second is if it is shorted to ground. The circuit will protect itself in the event of a mis-wire, but it will hold the output open(floating) until the fault is removed.

WARNING
It is recommended that the Relay Output be configured for the failsafe 'Normally On' mode, to ensure maximum fault protection and annunciation. Failure to follow these guidelines could, under exceptional circumstances, lead to personal injury and/or property damage.

Katolight Service - Master Repair Manual - Page 3017

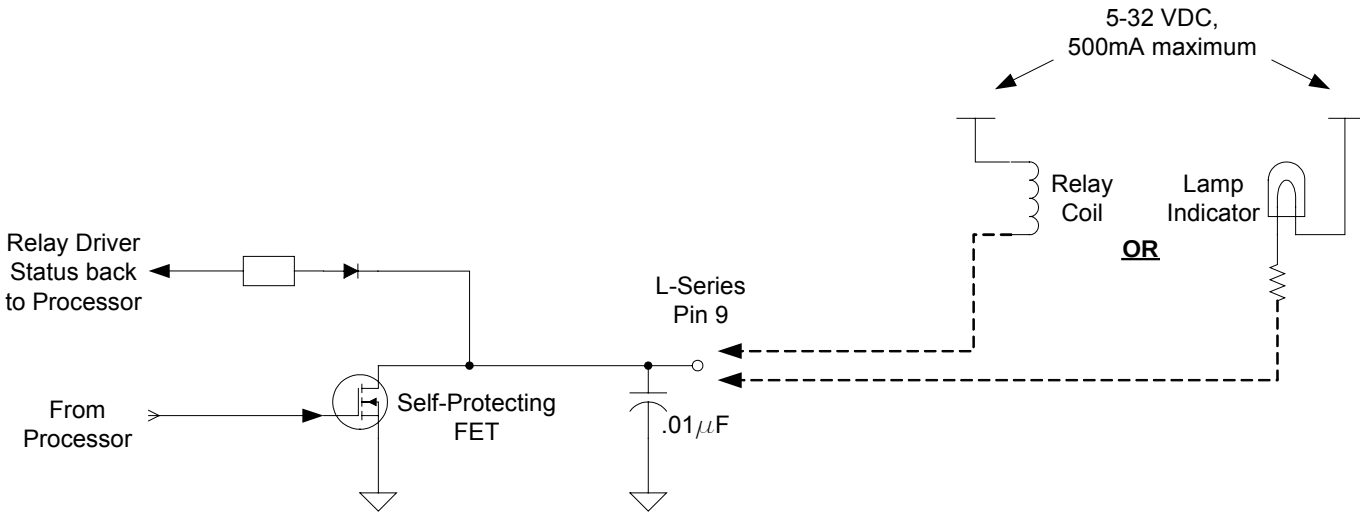

Figure 3-6. Relay Driver Output

5V Output (pin 7, referenced to pin 3)
A 5 Vdc output has been provided on the L-Series actuator to power external sensors, if necessary. The 5 V output is limited to 10 mA, but this is sufficient for most light-duty ratiometric sensors

NOTE
All connector pins are short-circuit protected to ground and power except pins 3 and 5, which are not protected against shorts to battery positive. Installation of a fuse on the power ground wire to pin 5 would provide protection to these pins but does not mean a fuse is not needed in the power connection. Pin 1 (B+) still needs protection against a short to ground.

AUX INPUTS (+ at pins 4, 6, 8, and 10; ground at pin 3)
There are four auxiliary inputs on the L-Series control, all of which are capable of both analog and discrete functions. The Aux functions (below) are mapped to Aux inputs using the Service Tool. If desired, multiple functions can be mapped to a single Aux input. For added flexibility, discrete functions can be programmed to be always on or always off as well as open or closed for the selected function. Analog inputs can also be inverted (direction reversed).

Although they are very flexible, two Aux inputs are shared with the serial communications, and will be unavailable if the L-Series is connected to the Service Tool. However, a means of simulating these inputs is provided for test purposes through the Service Tool interface.

The functions available for AUX input configuration are:
- Isochronous Loadsharing analog input
- Remote Speed Setpoint analog input
- MAP/Boost Fuel limit analog input
- Rated 1 / Rated 2 (50/60 Hz) digital input
- Raise Speed Setpoint digital input
- Lower Speed Setpoint digital input
- Isoch/Droop digital input
- Idle/Rated digital input
- Alternate Dynamics digital input
- Run Enable digital input

Katolight Service - Master Repair Manual - Page 3018

The Service Tool communicates over RS-232 using Aux inputs 3 and 4. Whenever connected, the configured Aux input is bypassed (ignored).

Aux X Input Options
Aux1 (0–5 V analog, ±3 V analog, discrete input)
Aux2 (0–5 V analog, discrete input)
Aux3 (0–5 V analog, discrete input, service tool RS-232 or CAN)
Aux4 (0–5 V analog, discrete input, service tool RS-232 or CAN)

Connecting an auxiliary input pin to battery positive voltage activates it, assuming the input is configured for Active Closed. Removing battery voltage from an input pin or shorting the pin to ground deactivates the input. If not using battery voltage with the auxiliary digital inputs, it is recommended that at least 3 V be present on an input pin in order to change its state from inactive to active. For AUX2, AUX3, and AUX4, greater than 2.5 Vdc is considered high, and less than 0.8 Vdc is considered low. For the AUX1 discrete input only, the input must exceed 3 V to activate the discrete state. AUX3 and AUX4 are also used for digital communications such as RS-232 (service tool) or CAN (if the CAN option was purchased). RS-232 and CAN will NOT run simultaneously.

Figure 3-7 shows the most typical usage of the various auxiliary inputs.

NOTE
Aux inputs 3 and 4 are used as service port connections, but can also be used as either discrete or analog inputs, much the same as Aux 2. When used as a service port, the analog and discrete functions will not work. Woodward recommends that the service port not be connected during normal use. It is intended for system setup and troubleshooting only.

Communications

RS-232 communications are available on the L-Series when used with an external transceiver connected to pins 4 and 6. Serial communications allow for the use of a service and configuration tool with the L-Series actuator. The simplest way to establish this interface is to use Woodward kit # 8923-1061.

Functions available through this port include tuning, monitoring, and configuration of the position control. Detailed driver status information is also available.

Katolight Service - Master Repair Manual - Page 3019

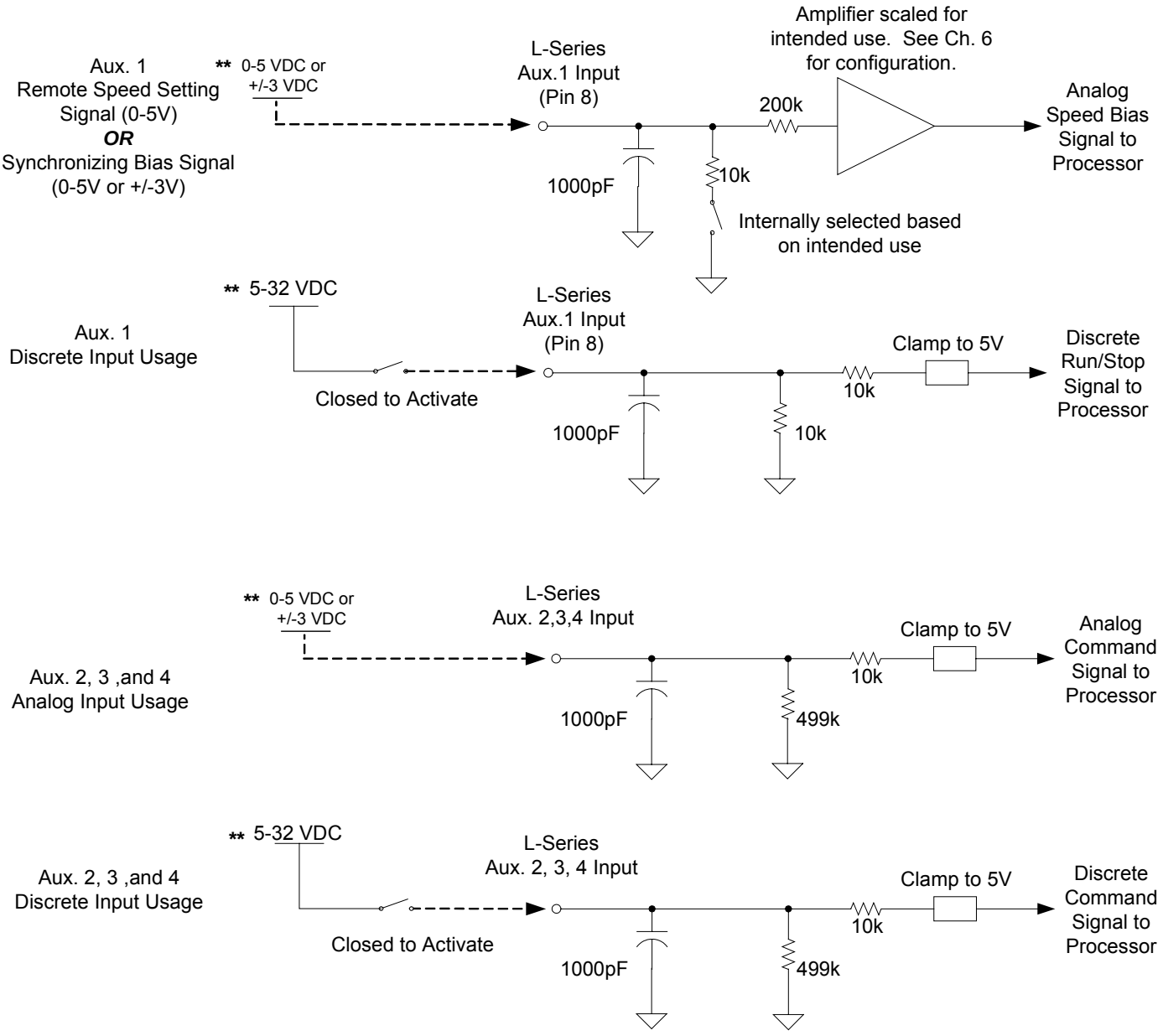

****** Reference all analog or discrete inputs to L-Series signal ground (Pin 3)

Figure 3-7. Typical AUX Input Usage

Any RS-232 wiring must meet the requirements in the EIA RS-232 Standard document. The RS-232 standard states that the length of the RS-232 cable between the driver and the PC must be less than 50 ft (15 m) with a total capacitance less than 2500 pF. The RS-232 data rate is fixed at 19.2 kbps. The communication port is non-isolated and susceptible to both EMI noise and ground loops related to PC connections and typical industrial environments.

RS-232 Connections (pin 4 and pin 6)
These pins are for serial communication with the L-Series actuator. An external RS-232 transceiver is necessary to make communications possible with the Woodward L-Series Service Tool. A connectivity kit can be purchased from Woodward to accomplish this. Further instructions for using this connectivity kit are provided in Chapter 4.

It is recommended that the OEM or packager provide a breakout cable that is connected to the L-Series service port and run to an easily accessible area on the engine. The service port is absolutely necessary to set up and troubleshoot the L-Series.

CAN Connections (pin 4 and pin 6)
At the time of printing of this manual, CAN is not currently available in speed control applications of the L-Series actuator. When this function is available, the manual will be updated and will include detailed instructions for properly connecting CAN communications to the L-Series actuator.

NOTE
The service port is not isolated and is not intended to function while the prime mover is in normal operation. The service port is provided for configuration and setup only.

Ground Junction (see Figure 3-8)
This grounding junction is provided for joining external ground wires. THERE IS NOT AN INTERNAL CONNECTION TO CIRCUIT GROUND. Terminal pins 3 and 5 must be used for access to the circuit ground. This junction point is completely electrically isolated from the L-Series actuator's electronics, and is solely for convenience during installation.

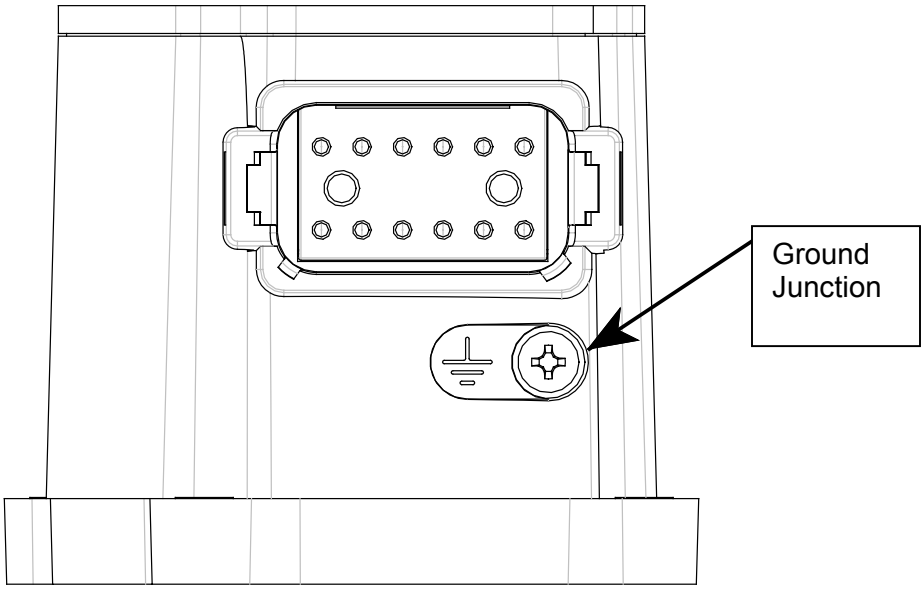

Figure 3-8. Ground Junction Point

Katolight Service - Master Repair Manual - Page 3021

Chapter 4.
Description of Operation

General

The L-Series Speed Control is an electric actuator with position feedback and an integrated digital speed control. The actuator output shaft connects to the fuel gas valve, intake throttle or fuel oil pump rack shaft of a reciprocating engine. The output shaft maximum rotation is 60 degrees and is configurable for CW or CCW rotation. A manual mode is provided to facilitate setting up the actuator system.

The speed setpoint can be adjusted by a remote 0–5 Vdc analog input or by discrete inputs (such as Idle/Rated, 50/60 Hz selection, 3-Speed, or Raise/Lower).

For generator applications, isochronous load sharing and synchronizing capability is available by a ±3 Vdc analog input in place of the remote 0–5 Vdc analog input. A compatible load sharing/synchronizer device is needed to provide the load sharing/synchronizer input bias signal. Droop operation can also be configured.

Control adjustments are made using the L-Series Service Tool. The Service Tool is a Windows based software tool used to configure, monitor, adjust, and troubleshoot a L-Series speed control system. It runs on a personal computer and communicates with the L-Series speed control through a serial connection. The L-Series Service Tool includes optional password protection to provide security against tampering.

The speed sensor input contains a software-configurable filter that minimizes the effects of firing torsionals that occur normally in reciprocating engines. This filter ensures the actuator will not react to speed sensor input changes produced by firing torsionals. This provides exceptionally smooth steady-state speed control and allows matching the control dynamics solely to the engine rather than detuning dynamics for firing torsional frequencies.

The control has a switching power supply with excellent spike, ripple, and EMI (electromagnetic interference) rejection. Discrete inputs are capable of rejecting EMI and variable resistance in switch or relay contacts. Analog inputs are differential type with extra filtering for common-mode noise rejection.

The control provides one discrete output, which changes states based on pre-defined alarm or status conditions. The control also provides one 0–5 V analog output which provides a position feedback indication. This analog output may be used with an analog meter, recorder, or as input to a computer.

The control provides a communications port which can be used as an RS-232 serial interface or a CAN communication connection. The RS-232 port is the service port used by the L-Series Service Tool to configure and tune the L-Series system. CAN communications is a future option, contact your Woodward representative for availability and options.

Katolight Service - Master Repair Manual - Page 3022

System Operation

The L-Series actuator is ready for operation immediately (within 0.25 second) when the power supply is connected. Power may be connected to the control at the same time the engine starter motor is engaged.

On an engine shutdown command, the independent engine shutdown solenoid or solenoid valve in the fuel supply should be de-activated and the power supply disconnected from the speed control. This shutdown signal should be sent directly from the engine control panel and should be independent and separate from the L-Series control.

WARNING
The L-Series control should not be used as the primary means of shutting down the engine.

Starting the Engine

A typical engine starting sequence will look like this, if no shutdown faults are detected:

When powered-up, the L-Series control will be in position control at the configured min position. If a Run Enable discrete input is configured, it must be closed. When the starter is engaged, the speed will increase above the Start Speed 1 Threshold, and the control will position the shaft to the Start Fuel position demand. If two Start Fuel positions are used and speed increases above the Start Speed 2 Threshold, the control will position the shaft to the Start Fuel 2 position setting. Once the engine speed is above the Run Speed Threshold, the control will switch from start fuel demand to the fuel demand from the speed control PID. At this point, the unit is in speed control and will control the engine to the speed setpoint. The PID position during starting is tracking the start fuel values, providing a bumpless transfer to speed control. At this point, the speed setpoint increases to the configured or selected setting—Idle, Rated, Rated 1, or Rated 2.

If a shutdown fault is detected, the control will drive the output to the configured fail direction position.

Control Features Description

As you review the following features, keep in mind that most applications will only require a few of the functions to be activated. The choices are available to provide maximum flexibility in a single package. The user must set up the actuator direction, speed input, setpoint logic, and desired I/O. From the dynamics functions area, the user can set as many or as few as is necessary for stable operation. The user can choose all or none of the fuel limiter functions, speed setpoint modifiers, alarm/shutdown functions, security and logic functions depending on the application.

The control I/O consists of input power, a speed input, 4 configurable aux inputs, a status output, and an actual position indication (see Figure 4-1).

Katolight Service - Master Repair Manual - Page 3023

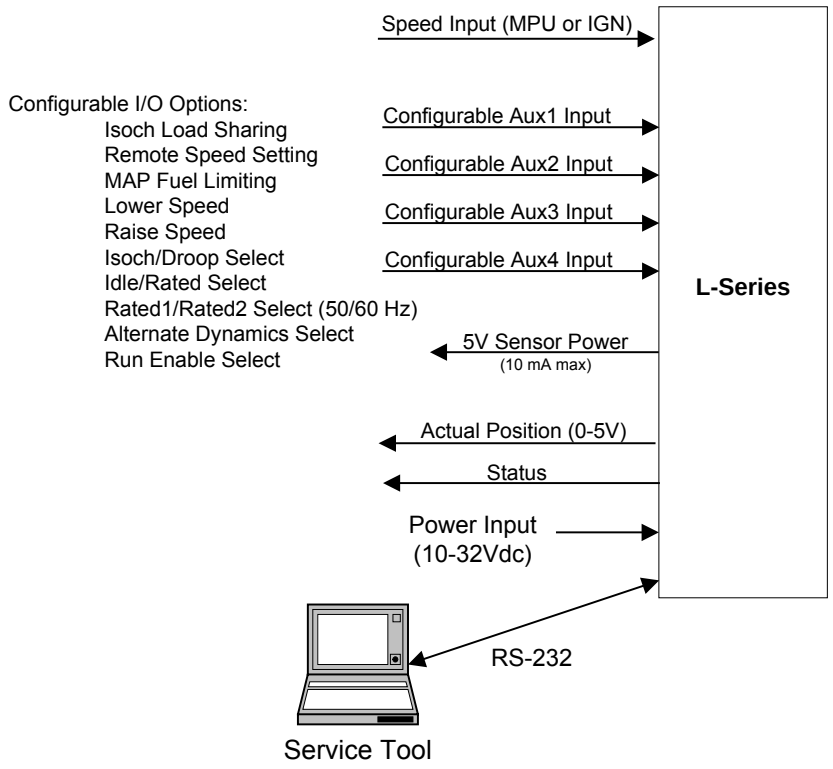

Figure 4-1 Overview of L-Series Inputs/Outputs

Speed Control Functions

The speed control consists of a speed input, speed setting logic, speed biasing logic, and speed dynamics options.

Speed Input

The L-Series control accommodates one speed input, from either a magnetic speed pickup (MPU) or ignition input, which provides a speed signal to the control. A digital type of detection with firing torsional filtering is used for detecting engine speed. This digital detection method senses speed very quickly for rapid response to speed changes. The input frequency is converted to engine speed based on the gear teeth (if MPU) or number of cylinders and 2-/4-stroke settings (if ignition) configured.

Speed Settings and Ramps

The L-Series provides for local speed setpoint control by discrete raise and lower inputs. A 0 to 5 Vdc analog input provides for remote speed setpoint control. A ±3 Vdc analog input provides for isochronous load-sharing and synchronizer control. Input function must be configured to activate the desired setpoint function.

Katolight Service - Master Repair Manual - Page 3024

Speed Setting and Ramp Functions

The control provides run, idle, and two rated speed set points with a lower and raise limit, plus accel and decel ramps, raise and lower ramps, and a ramp to idle rate. All ramp rate settings are in rpm/s, and all speed setpoint changes are ramped for smooth setpoint transition. For emergency standby applications, a very high ramp rate effectively cancels the ramp function to provide rapid starting. The Ramp to Idle determines how fast speed is increased from run to idle speed. Accel rate determines how fast speed is increased from idle to rated speed. Decel rate determines how fast speed is decreased from rated speed to idle speed. The accel and decel rates are used when transferring between rated 1 and rated 2 speeds. Raise and lower rates determine how fast speed is increased or decreased by the raise and lower command inputs. Max Analog Rate is the maximum rate the speed can be increased or decreased by the remote speed setpoint input.

The Run Speed setting must be above cranking speed, but below the speed attained when running the start fuel limit position. The speed control activates at run speed by grabbing the current operating speed as the initial speed setpoint, then ramping the setpoint up to the idle speed setting at the ramp to idle rate. If the idle/rated input is set in the rated position, acceleration will pass seamlessly through idle speed to the selected speed setpoint (remote, rated 1 or rated 2) at the accel rate.

Speed Setting Options

The following section describes the various speed setting modes.

Single Speed (Rated) Select—If no speed biasing functions are enabled, the engine will run at one set speed. With this configuration, there is no external speed adjustment. Speed is held constant at the rated speed setting. However, the fuel limiters, run speed setting, and accel ramp are provided and active for light-off and acceleration control up to rated speed.

50/60 Hz (Rated 1/Rated 2) Select—This feature allows the user to switch the speed set point between a primary and secondary engine rated speed. A user-definable discrete input, configured as Rated1/Rated2, is used to toggle between the two set speeds. The input can be configured to select Rated 2 on either opening (active open) or closing (active closed) of the contact input. This mode can be configured for start-up select or runtime select.

Runtime Select—The user can toggle between the two speed settings at any time during operation. The transition rate between the two speeds is determined by the configured acceleration and deceleration rates. If the setpoint is increasing it will use the acceleration rate. If decreasing, the deceleration rate is used.

Start-up Select—When run speed is reached speed setpoint will ramp to Rated 1 or Rated 2 setpoint depending on the state of the Rated 1/Rated 2 discrete input. After run speed is reached the Rated 1/Rated 2 discrete input will have no effect until speed is below the stopping speed.

Katolight Service - Master Repair Manual - Page 3025

Idle/Rated Select—This feature allows the user to toggle the speed set point between an idle and a rated speed. A user-definable discrete input, configured as Idle/Rated, is used to toggle between the two set speeds. The input can be configured to select Rated on either opening (active open) or closing (active closed) of the contact input. The user can toggle between the two speed settings at any time during operation. During transitions, the acceleration and deceleration rates are used.

Idle/Rated is commonly used to provide an idle speed set point for engine warm-up or cool-down cycles. The Idle speed setting is independent of the lower limit set point and may be set at a lower speed. Idle speed cannot be changed except by adjustment of the software set point. The idle speed set point is selected during starting when engine speed exceeds the run speed setting or while running whenever the idle/rated contact is open (assuming an active closed configuration). Closing the idle/rated contact ramps the speed set point from idle to rated. The raise and lower commands increase and decrease engine speed based on the raise and lower rate settings. Closing either the Raise or Lower contacts while ramping from idle to rated immediately cancels the idle to rated ramp and speed follows the raise or lower commands for variable speed control. The raise and lower commands will not adjust the speed setpoint above the raise limit nor below the lower limit. The control ramps the remote setpoint at the raise or lower rate settings. Closing both the raise and the lower contacts enables the analog input for remote variable speed setpoint control, if configured. In Analog Mode the Analog Rate Limit is used.

Three-Speed Select—Some refrigeration applications may find it useful to have three engine speeds available: a highest speed for quick cool-down when warm goods are put into a container, a lowest speed to maintain the load's temperature once it has been cooled, and an intermediate speed for increased cooling if the container door is opened to move goods in or out. Typically, the discrete inputs for each of these speeds will come from an automatic thermostat, and only one will be high at a time. Mobile access platform (scissor lift) applications may also require three engine speeds, which correspond to three basic operating modes: static lift, transient lift, and mobile vehicle travel.

To provide this feature, two user-definable discrete inputs must be configured as Idle/Rated and Rated1/Rated2. The Idle/Rated input has the higher priority, if Idle is selected the setpoint will move to the idle speed setting. The Rated1/Rated2 input will determine the selected speed when the Idle/Rated input is selecting 'rated'. During transitions, the acceleration and deceleration rates are used.

Example: If the inputs are configured as follows, Idle/Rated = Aux3 (active closed) and Rated1/Rated2 = Aux4 (active closed), then the following summarizes the 3-speed selection.

Aux 3 (Idle/Rated)	Aux 4 (Rated 1/ Rated 2)	Selected Speed
Open	Open	Speed 1 (Idle)
Open	Closed	Speed 1 (Idle)
Closed	Open	Speed 2 (Rated 1)
Closed	Closed	Speed 3 (Rated 2)

Up to a five-speed select can be used if the Raise and Lower commands are configured and used as position selectors. When using Raise or Lower selections, the control ramps the remote setpoint at the raise or lower rate settings. This option may be desirable if another rate is needed.

Katolight Service - Master Repair Manual - Page 3026

Raise/Lower Adjust—This feature allows the user to change the speed set point with external discrete inputs. If both the raise and lower discrete inputs are closed, the lower has priority.

Lower— A user-definable discrete input, configured as Lower, acts directly on the internal speed set point within the L-Series control, and will progressively decrease the speed set point down to a programmable lower limit at the programmed lower rate for as long as the input is in a high state (assuming the input is configured as active closed). When this input goes low, the speed reference will remain fixed at the last setting reached the instant the input went low.

Raise— A user-definable discrete input, configured as Raise, acts directly upon the internal speed set point within the L-Series control, and will progressively increase the speed reference up to a programmable upper limit at the programmed raise rate for as long as the input is in a high state (assuming the input is configured as active closed). When this input goes low, the speed reference will remain fixed at the last setting reached the instant the input went low.

SPEED BIASING

Isochronous (Droop OFF)—This is the default speed biasing function if none of the other speed biasing functions are selected. This maintains the engine at one speed setting throughout operation regardless of load.

Droop—This feature allows for a change in speed set point with a change in load. This feature is primarily used when the generator is connected to a utility bus or paralleled with another genset on an isolated bus. In this situation, the utility will determine the frequency of the alternator.

Droop is a tunable value that decreases the speed setting when load increases as determined by the actuator output position. Droop is set as a percentage of rated speed (or Hz). Actuator positions must be entered for no-load and full load to correlate the speed setting to load. A setting of 0% droop disables the Droop function.

The desired engine speed reduces with the following formula:

$$\frac{\text{speed reference} * \text{droop percentage} * (\text{actual position} - \text{no load actuator position})}{(\text{full load actuator position} - \text{no load actuator position})}$$

The speed offset calculated is determined by the user-configured droop percentage, no load actuator position, and full load actuator position parameters.

Droop is off at start-up, and is enabled at speeds above Idle.

A user-definable discrete input, configured as Droop, can optionally be used to transfer between droop and isochronous control.

Katolight Service - Master Repair Manual - Page 3027

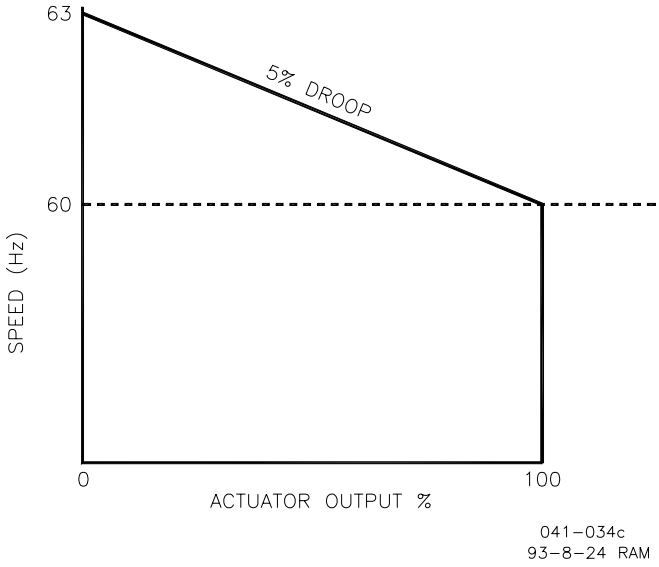

Figure 4-2. 5% Droop Example

Analog Biasing—This feature allows the user to alter the speed setpoint with an external signal. The input can be configured to function as a Remote Speed Setting or for Load Share / Sync operation. The only difference between these modes is how they affect the speed setpoint. The Remote Speed Setpoint will adjust the speed within the define range such that a 0 V input signal corresponds to the Low limit, and a 5 V input corresponds to a High Limit setpoint (assuming a non-inverted input). If configured as Load Share / Sync, a mid voltage input signal will provide no setpoint bias. Assuming a non-inverted input, a min voltage input will give max negative bias and a max input voltage will give a max positive bias. The bias range is defined as a user-configurable percentage of speed setpoint.

Remote Speed Setpoint Mode

The Remote Speed setpoint input typically operates from 0 to 5 Vdc; however, it can be configured as a ±3 V input. A direct or reverse-acting remote speed setting can be configured, using a normal or inverted input selection. Between 0 and 5 Vdc, the control determines the speed setpoint based on a straight line between the Low Limit and High Limit speed settings configured (see Figure 4-3).

WARNING

It is recommended that the actual engine speed be used to externally verify that the speed command matches the command signal sent. Failure to comply with this recommendation can result in undetected system faults.

Load Share / Sync Operation

When the generator breaker is open, the analog input is used for synchronizing. When the generator breaker is closed, this analog input is used for isochronous load sharing within a generator system. An isochronous load sharing module/synchronizer must be connected to provide the isochronous load sharing/synchronizer functions.

Katolight Service - Master Repair Manual - Page 3028

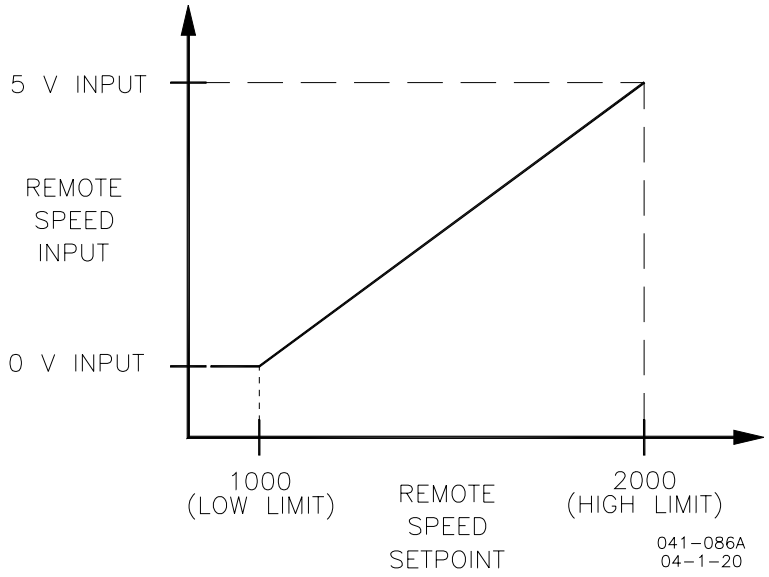

Figure 4-3 Remote Speed Setpoint

The typical Woodward Isochronous Load Sharing/Synchronizer analog input operates from –3 to + 3 Vdc. This voltage input signal biases the speed setpoint directly and is not ramped like the speed setpoint sources, however, a user-configurable max analog rate is available to provide a max adjustment rate. A positive voltage input increases the speed setpoint. A negative voltage input decreases the speed setpoint. At zero voltage input the speed setpoint is held constant.

The adjustable analog input must be scaled to match the Load Sharing Module/Synchronizer used for these purposes. A DSLC™ load sharing control typically requires a 3% of rated rpm speed setpoint change per volt. An SPM-A synchronizer typically requires a 0.667% of rated rpm speed setpoint change per volt. Other load sharing controls may need different settings.

If configured for Aux1 input, it is programmable as either a 0–5 V input or ±3 V input. Aux 2–4 inputs are limited to 0–5 V signals only.

The bias percentage is a programmable value. When configured as a 0–5 V input, 5 V corresponds to the full bias percentage in a positive direction; 0 V corresponds to the full bias percentage in a negative direction; and 2.5 V corresponds to no bias (assuming the input is not configured with the invert option). This analog input should be provided by a voltage transmitter via twisted, shielded wire pairs.

When configured as a ±3 V input, +3 V corresponds to the full bias percentage in a positive direction; –3 V corresponds to the full bias percentage in a negative direction (assuming the input is not configured with the invert option). This analog input will be available to interface with Woodward's standard Load Sharing Module. This auxiliary input acts directly on the L-Series speed reference and biases it by a programmable amount up to approximately ±7% in direct proportion to the ±3.0 Vdc signal. This input will be active only when the L-Series is selected for isochronous operation and should be provided via twisted, shielded wire pairs.

Katolight Service - Master Repair Manual - Page 3029

Combination Analog Biasing and Raise/Lower—This feature allows both an analog speed set point and raise/lower setpoint commands. To use this mode requires aux inputs to be configured for a Raise, a Lower, and an Analog input. When a Raise command is activated, the setpoint increases, and when a Lower command is activated, the setpoint decreases. The Analog input is selected when both the Raise and Lower inputs are activated.

General Speed Setpoint Comments—If Idle/Rated is configured, the selection of idle setpoint has priority over the raise/lower and analog setpoints. The idle setpoint must be unselected (rated setpoint selected) to activate the raise/lower and analog setpoints. If configured, the analog setpoint has priority over the rated setpoint. If the analog setpoint is selected when the idle/rated input is switched to the rated position, the setpoint will ramp to the analog setpoint rather than the rated setpoint.

Speed Control Dynamics

The control algorithms used in the L-Series control are designed specifically for reciprocating engine applications. The L-Series speed control offers a powerful set of dynamics that closely match a wide variety of fuel delivery systems and applications. The following configuration choices are offered.

Rated Dynamics
If configured for Rated Dynamics, the gain remains constant as entered and does not vary with engine speed or load. These are simplest dynamics and suit most constant speed applications. Rated dynamics are typically used on engines that operate continuously at rated speed or on variable speed engines that tend to be stable at all speeds with constant dynamic settings.

Idle/Rated Dynamics
If configured, Idle/Rated Dynamics vary the gain with engine speed. Idle gain applies when operating at idle speed. Rated gain applies when operating at rated speed. The gain varies linearly at intermediate speeds and is limited by the idle and rated gain setting at speeds below idle and above rated. Idle/Rated dynamics are useful for variable speed engines that tend to be less stable at idle speed with optimum rated speed dynamic settings.

Rated Dynamics Curve
A Rated Dynamics Curve varies the rated gain value with fuel demand (actuator position). Fuel demand is roughly proportional to load but not necessarily in a linear manner. A 5-breakpoint gain curve is provided to map gain versus fuel demand. Gain is applied linearly between breakpoints. A common gain setting is also provided to shift all gain curve gains higher or lower. This gain curve is particularly useful for non-linear fuel systems (such as intake butterfly valves).

Idle/Rated Dynamics Curve
When using an Idle/Rated Dynamics Curve, gain varies with both engine speed and fuel demand (actuator position). Two separate 5-breakpoint gain curves are provided to map gain versus fuel demand. The Idle Gain Curve applies when the engine is operating at idle speed. The Rated Gain Curve applies when operating at rated speed. The gain varies linearly at intermediate speeds and is limited by the idle and rated gain curve settings at speeds below idle and above rated. Separate common gain settings are provided for each curve to shift all gain curve gains higher or lower. Idle/Rated Dynamics Curve is useful for non-linear fuel systems that tend to be less stable at reduced speed and load operation with optimum rated dynamic curve settings.

Katolight Service - Master Repair Manual - Page 3030

For all dynamic configurations the Integral and Derivative settings are constant and do not vary with either engine speed or load.

Cold Start Timer
In demanding genset applications that require ‘G3’ performance but are also intolerant of cold start instability, the L-Series control offers a cold start timer function that sets the gain of the control to a lower-than-normal value until a programmable amount of time expires. This gives an engine time to warm up slightly before switching to a normal gain value. The cold start timer can be bypassed by programming a time of 0 seconds.

Dual Gain Settings
Gain Window and Gain Ratio settings further modify the applied gain. These Dual Gain Dynamic settings can improve both steady state and transient load performance by automatically switching between two gain settings. A low gain setting is applied during steady-state operation. A high gain setting is applied during load transients. Dual Gain Dynamics are available for all gain configurations.

During steady-state loaded operation, the control uses the primary gain setting (rated gain, idle /rated gain, etc.). In this region, gain is set to prevent the control from responding to minor speed fluctuations inherent with reciprocating engines. This essentially eliminates harmful jiggle of the actuator output and the fuel system linkage during steady-state loaded operation.

During load transients, should the speed error exceed the adjustable Gain Window width, the primary gain setting is multiplied by the gain ratio setting to temporarily increase the applied gain. This higher gain produces a faster fuel response to quickly restore engine speed to the speed setting. Speed error is the difference between actual engine speed and the engine speed setting. The primary gain setting is restored once the control senses a return to steady-state operation (see Figure 4-4). Setting the gain ratio to 1 disables the function.

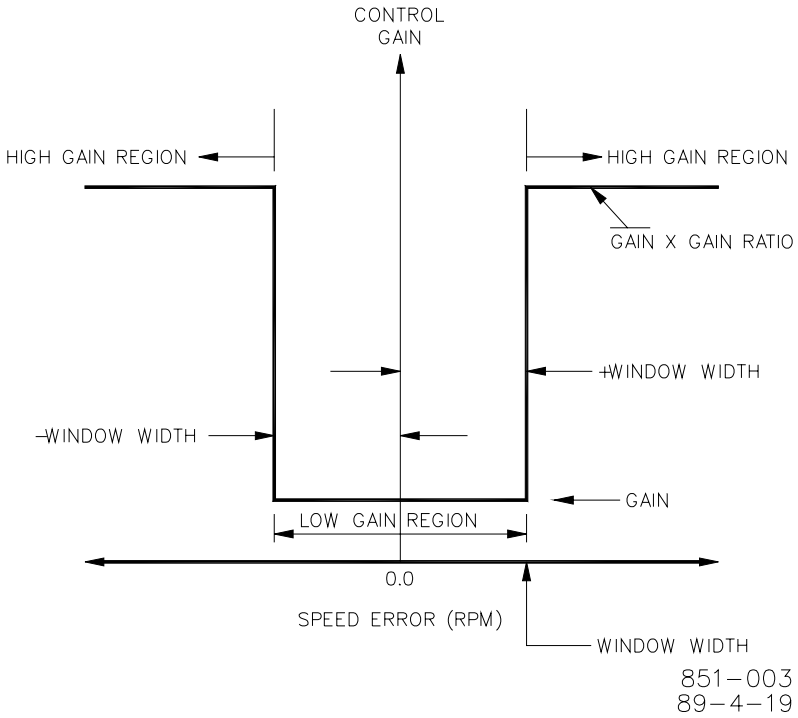

Figure 4-4. Dual Gain Settings

Katolight Service - Master Repair Manual - Page 3031

Dual Dynamics

The L-Series speed control also provides a second set of dynamic adjustments (Dual Dynamics) that are selected by activating the 2nd Dynamics discrete input. The control must be configured for Dual Dynamics to make these settings available. Two sets of dynamics are useful for engines where operating modes change, such as in dual-fuel or in island/parallel generator applications. Delay settings are available to delay switching dynamics when the 2nd Dynamics discrete input changes state.

Start Fuel Limiting

The Start Fuel Limit (SFL) is an adjustable limiter on the fuel demand that prevents overfueling during engine starting. Two configurable start fuel limiters are available:

- Single Start Fuel Limit
- Dual Start Fuel Limit

The single Start Fuel Limit is suitable for most applications. With this configuration, the fuel demand immediately switches to the adjustable SFL1 Limit setting when the engine is cranking at the adjustable Start1 Speed setting. The SFL1 Limit is removed and Runtime Fuel Limiting is activated once the engine accelerates to the Run Speed. At the Run Speed the fuel is controlled by the speed control setpoint and ramping functions. The Run Speed setting must be set below the speed reached with the SFL1 Limit setting. See Figure 4-5.

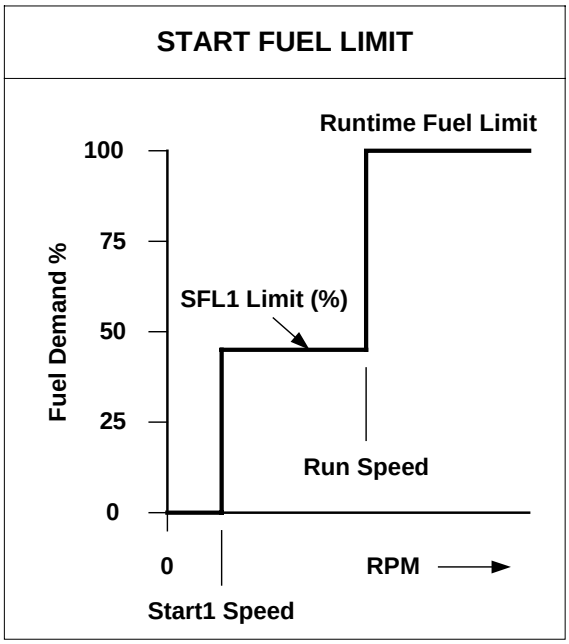

Figure 4-5. Single Start Fuel Limit

The Dual Start Fuel Limit is appropriate for engines that need a rather high fuel setting to start the engine, but a much lower setting immediately thereafter to minimize speed overshoot, black smoke, or prevent an overspeed shutdown. In addition, the SFL2 Limit can be set to increase at a controlled rate, once the engine is operating at the Start2 Speed setting. This can be a useful aid for starting cold engines. The Dual start Fuel Limit is appropriate for engines that need this ramping function.

Katolight Service - Master Repair Manual - Page 3032

With this configuration, the Dual Start Fuel Limiter works just like two sequential start fuel limiters plus a ramp between them. Extra settings Start2 Speed and SFL2 Limit w/Ramp provide the second limiter function between the Start1 Speed and Run Speed. Once Start1 Speed is reached, the limiter ramps the SFL2 Limit setting at the configured ramp rate. Setting the rate to its maximum value effectively eliminates the ramp. Start2 Speed must be set higher than the Start1 Speed setting. The SFL2 Limit can be set lower or higher than the SFL1 Limit setting. See Figure 4-6.

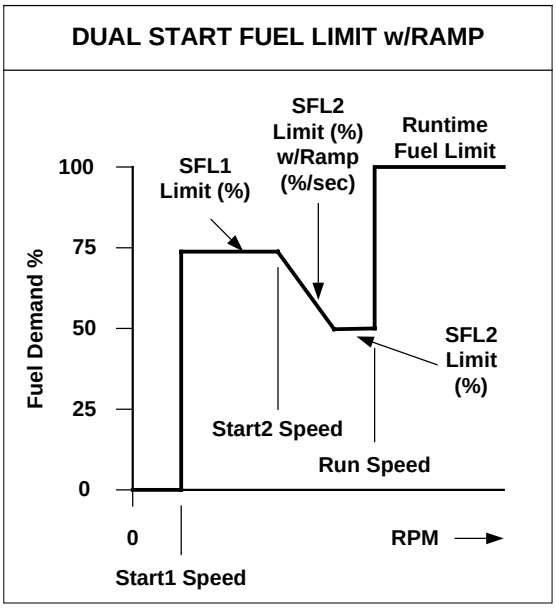

Figure 4-6. Dual Start Fuel Limiters

Runtime Fuel Limiting

The Runtime Fuel Limit is a maximum position limiter on the fuel demand that prevents overfueling/overloading after the engine has reached the run speed setting. Four configurable options are available:

- Maximum Fuel Limit
- Maximum Fuel Limit with Transients
- Boost (External) Fuel Limit Curve
- Runtime (Speed-based) Fuel Limit Curve

Maximum Fuel Limit
The Maximum Fuel Limit setting places a maximum limit on the fuel demand (actuator position). It is generally adjusted to prevent engine overloading at rated speed or to merely limit fuel delivery to the engine for other situations (such as, to prevent detonation). Adjusting the Max Fuel Limit to 100 percent disables the function.

Transient Fuel Limit
The Transient Fuel Limit setting allows a temporary increase to the fuel demand above the maximum (steady-state) fuel limit setting for a set transient time period. This can improve a load-on transient response by allowing a momentarily higher fuel demand. The fuel limits are restored once the Transient Fuel Limit time period expires. The transient fuel limit cannot be increased above 100 % fuel demand. The Transient Fuel Limit is not active below the Run Speed setting.

Katolight Service - Master Repair Manual - Page 3033

Boost (External) Fuel Limit Function

External fuel limit is a software adjustable five-breakpoint curve based on an external transmitter analog input signal. Manifold Air pressure (MAP) is typically used for the external fuel limiter signal. The purpose of the manifold air pressure fuel limiter is to prevent over fueling during loading to significantly reduce black smoke in diesel engine exhaust and unburned hydrocarbons in spark gas engine exhaust. A fuel demand (actuator position) limit is set for each specific air manifold pressure breakpoint.

The limiting value is linear between breakpoints as shown in Figure 4-7. The engineering units for each breakpoint are in percent and user set input units. The limiter must be carefully set since excessive fuel limiting can degrade the loading response. On occasion, exhaust temperature or other engine parameters are used for the external fuel limiting function. The external fuel limiter is not active below the run speed setting. With this mode the Maximum Fuel limit setting is still active.

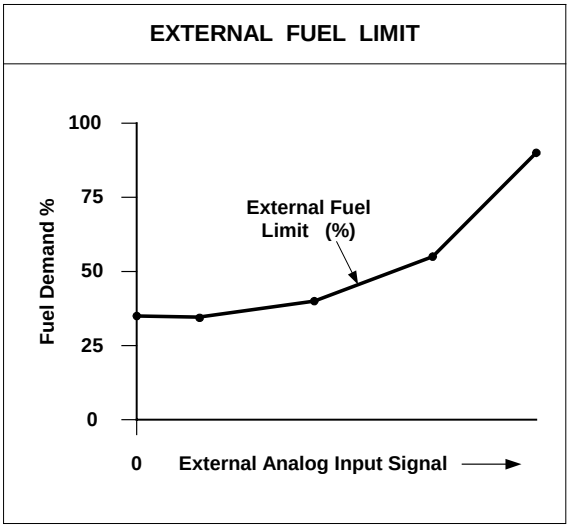

Figure 4-7. Boost (External) Fuel Limit Curve

Runtime Fuel Limit Curve

Runtime Fuel Limit is a software adjustable five-breakpoint curve based on engine speed. The purpose of this fuel limiter is to prevent engine overload during variable speed operation by mapping a fuel limit over the entire speed operating range. The speed input provides the signal for this limiter function. A fuel demand (actuator position) limit is set at each specific engine speed breakpoint. The limiting value is linear between breakpoints as shown in Figure 4-8. The engineering units for each breakpoint are in percent and rpm. Each speed entry must be equal to or higher than the previous entry. The limiter must be carefully set since excessive fuel limiting reduces load-carrying capability. The runtime fuel limiter is not active below the run speed setting.

Katolight Service - Master Repair Manual - Page 3034

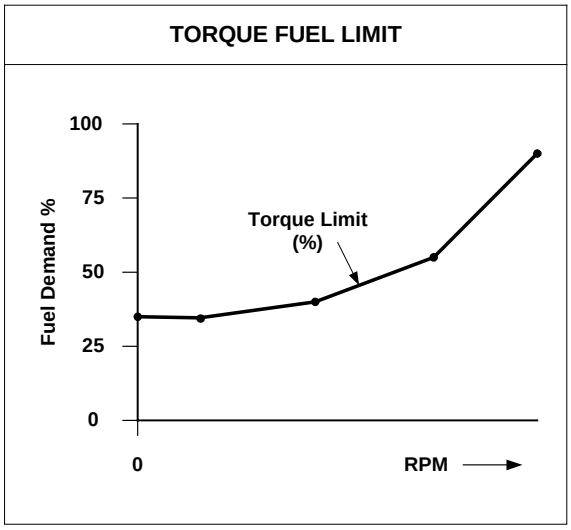

Figure 4-8. Runtime Fuel Limit Curve

Temperature Sensing

The L-Series has an on-board temperature sensor to monitor board temperatures and protect the unit from overtemperature. This temperature is monitored and a fault is annunciated if the set point is exceeded.

Current Limiting based on Temperature

The control provides actuator current limiting based on the electronics temperature. Dependent on board and actuator thermal models, the software reduces current as necessary to avoid conditions that would damage the device due to extreme temperatures.

Current limiting based on temperature begins when the combined current and temperature environment causes board temperatures greater than 117 °C. The limit curve is a linear derate from full current at 117 °C down to zero current at 125 °C. At 125 °C, an OverTemp fault is annunciated. Depending on the current (actuator torque) and ambient operating temperatures, the unit may never reach a reduced level.

Katolight Service - Master Repair Manual - Page 3035

Control Modes

The Service Tool displays the state of the L-Series control, the present mode of the unit. Options include:

- Stopping
- Engine Stopped
- Powered Down
- Start Fuel 1
- Start Fuel 2
- Ramping to Idle
- Running Idle
- Ramping
- Running Rated 1
- Running Rated 2

Stopping
The stopping state indicates the control has a shutdown fault and is driving the output shaft position to the closed position. Once speed has reached zero rpm, the control transfers to the stopped state.

Engine Stopped
In this state, the engine is stopped and the control is ready to begin the start-up cycle if there are no active shutdowns. After the Stopped State Delay, the holding current is applied to the actuator to limit the current draw and prevent battery drain.

Powered Down
In this state, the actuator position control is turned off and the holding current is applied to the actuator to limit the current. This state is only used if the engine is stopped and the run enable discrete input is not active.

Start Fuel 1
The Start Fuel 1 state is selected if the engine speed is higher than the Start Speed 1 threshold. In this state, the actuator position is set to the Start Fuel 1 value.

Start Fuel 2
The Start Fuel 2 state is selected if the engine speed is higher then the Start Speed 2 threshold. In this state, the actuator position is ramped to the Start Fuel 2 value. This state is only used if two start fuels are selected.

Ramping to Idle
Indicates the speed setpoint in ramping up to idle speed setpoint during a start sequence. Ramping to idle is only entered if configured to use an Idle / Rated speed set point. This state is selected if the engine speed is higher than the run speed threshold. At the moment this state is entered, the speed setpoint is set to the engine speed and then ramped to the idle set point using the ramp to idle ramp rate.

Running Idle
Indicates the speed setpoint is at the configured Idle speed setting. To leave this state, the rated command must be issued.

Katolight Service - Master Repair Manual - Page 3036

Ramping
The ramping state is used to ramp from one set point to another set point. If the setpoint is switched between Idle and Rated or Rated 1 and Rated 2, we will use this state to ramp with the acceleration or deceleration ramp rate. If Raise or Lower are momentarily selected (halt), the ramp will stop and the setpoint will remain at the last position. The setpoint can be adjusted from this point using the Raise/Lower commands. If the halt command is selected when ramping from idle to rated and the setpoint is below the normal adjustment range, the setpoint will continue to ramp and then halt at the minimum setting of the speed adjustment band.

Running Rated 1
Indicates the unit is running at the Rated 1 set point or the changed Rated 1 set point if raise, lower, or analog control is used.

Running Rated 2
Indicates the unit is running at the Rated 2 set point or the changed Rated 2 set point if raise, lower, or analog control is used.

Fault Detection and Annunciation

Faults can be configured to either alarm or shutdown on occurrence. An alarm basically does nothing but annunciate the fault. A shutdown forces the actuator to a predetermined position regardless of the demanded position. The L-Series can be programmed to fail in the CW or CCW direction. When the shutdown condition no longer exists, the L-Series is returned to a non-shutdown state. Faults can be globally set as either latching or non-latching. When set to latching, either a reset command or a power-cycle is required to clear the fault and allow the unit to start again. If non-latching, the fault is automatically cleared without any reset.

Faults

Faults are separated into two categories: Logged Faults and Current Faults. The Current Faults are volatile and reset every time power is applied. The Current Faults annunciate faults that are presently active/detected. All Logged Faults are latched and written to the EEPROM. They must be cleared through the Service Tool.

Faults can be globally configured as either latching or non-latching. This is a general setting that applies to all faults, unless otherwise noted. When configured as non-latching, a Reset is not needed. If latching mode is configured, a Reset or power-cycle is required to clear the fault and resume positioning. A Reset command can be accomplished by opening and closing a Run Enable discrete input (if configured) or using the Service Tool.

A parameter is available to configure each fault to either an alarm or a shutdown. Each fault can also independently be set to change the state of the discrete output. The shutdown action performed is fault-dependent. Some faults are dedicated as alarms or shutdowns and cannot be configured—they are identified as such below.

Each possible fault is described below.

Katolight Service - Master Repair Manual - Page 3037

Watchdog Reset
Watchdog Reset is true if a watchdog timer timeout occurred which resulted in a reset of the microprocessor. This is a hard-coded alarm. If detected, the control will attempt to continue normal operation. This fault is always latching, and a reset is required to clear it.

Brownout Reset
Brownout Reset is true if CPU Voltage drops below 4.2 V but not below 1 V. The brownout detect circuit will reset the CPU. This is a hard-coded alarm. If detected, the control will attempt to continue normal operation. This fault is always latching, and a reset is required to clear it.

EEPROM Fail
EEPROM Fail indicates failure or corruption of the internal non-volatile memory. If the CRC is not correct for the EEPROM data, this fault will be set true. This is a hard-coded internal shutdown. If detected, the control output will go limp. This fault is always latching and a reset is required to clear it.

Position Sense Fail
This indicates a failure of the internal Position Sensor. This is a hard-coded internal shutdown. If detected, the control output will drive to the Fail Direction using current control.

Failure levels: >4.75 V and < 0.25 V
Persistence: 650 ms

Voltage Sense Fail
Indicates an out-of-range signal on the input power. Could indicate input power out of range or a fault in the supply voltage sense circuitry.

Failure levels: >33 V and <6.25 V
Persistence: 650 ms

Can be configured as an alarm or shutdown. If configured as a shutdown, the control will drive to Fail Direction (using current control) if this fault is detected. If configured as an alarm, the control will internally default to an assumed 32 V power supply voltage (decreased torque at lower actual voltages) and attempt to continue normal operation if this fault is detected. The value displayed on the Service Tool will show sensed value, not default.

Temp Sense Fail
Indicates a failure of the internal on-board Temperature Sensor.

Failure levels: >150 °C and <–45 °C
Persistence: 650 ms
Hysteresis: 5 °C (<145 °C or >–40 °C to clear)

Can be configured as an alarm or shutdown. If configured as a shutdown, the control will drive to Fail Direction (using position control) if this fault is detected. If configured as an alarm, the control will internally default to 25 °C and attempt to continue normal operation if this fault is detected. The value displayed on the Service Tool will show sensed value, not default.

OverTemp
If the on-board temperature sensor reads above 125 °C, this error will be set. Above 125 °C, the processor can fail in an unpredictable manner, so this fault is recommended as a shutdown. The Current Limiting based on temperature will effectively make the output "limp" by reducing the drive current to zero.

Failure levels: >125 °C
Persistence: 650 ms
Hysteresis: 5 °C (<120 °C to clear)

Katolight Service - Master Repair Manual - Page 3038

Can be configured as an alarm or shutdown. If configured as a shutdown, the control will go limp if this fault is detected. If configured as an alarm, the control will attempt to continue normal operation if this fault is detected.

Position Error
Position Error detection logic will indicate a difference between commanded position and actual position exceeded for longer than the set delay. The error magnitude and duration are customer-configurable parameters.

Failure levels: Set by customer variable, Error > |PosErrorMax|
Persistence: Set by customer variable, Position Error Delay.
Hysteresis: none
Override: Whenever the current is being limited to a factor of 1/2 normal maximum or less. This would be because of high temperature (see section on Temp Sensing and Current Limiting) or a shutdown that causes the output to go "limp".

Can be configured as an alarm or shutdown. If configured as a shutdown, the control will drive to Fail Direction (using position control) if this fault is detected. If configured as an alarm, the control will attempt to continue normal operation if this fault is detected.

Relay Output Shorted
The relay driver is thermally protected against wiring errors. If incorrectly wired, the output will turn off and then set the Error Bit.

Can be configured as an alarm or shutdown. If configured as a shutdown, the control will drive to Fail Direction (using position control) if this fault is detected. If configured as an alarm, the control will attempt to continue normal operation if this fault is detected.

Speed Input Failed
Speed input signal failed indication.

Dedicated shutdown. The control will drive to Fail Direction (using position control) if this fault is detected. The control must return to a safe condition, determined as the powered-down or stopped state, prior to resuming operation.

Failure levels: < (Start Speed / 2)
Persistence: 13.0 ms

Overspeed
Indication that speed was above the configured overspeed level.

Dedicated shutdown. The control will drive to Fail Direction (using position control) if this fault is detected. The control must return to a safe condition, determined as the powered-down or stopped state, prior to resuming operation.

Failure levels: > Overspeed level configured value
Persistence: 6.5 ms

Governing Error High
Indication that speed was above the high error level for longer than the configured delay.

Can be configured as an alarm or shutdown. If configured as a shutdown, the control will drive to Fail Direction (using position control) if this fault is detected. If configured as an alarm, the control will attempt to continue normal operation if this fault is detected.

Katolight Service - Master Repair Manual - Page 3039

If faults are set to non-latching, this fault will not automatically reset until the control is return to a safe condition, determined as the powered-down or stopped state.

Failure levels: > Governing Error High configured level
Persistence: Governing Error High Delay configured value

Governing Error Low

Indication that speed was below the low error level for longer than the configured delay.

Can be configured as an alarm or shutdown. If configured as a shutdown, the control will drive to Fail Direction (using position control) if this fault is detected. If configured as an alarm, the control will attempt to continue normal operation if this fault is detected.

If faults are set to non-latching, this fault will not automatically reset until the control is return to a safe condition, determined as the powered-down or stopped state.

Failure levels: < Governing Error Low configured level
Persistence: Governing Error Low Delay configured value

Max Start Timeout

A failure to start indication. Run speed not attained prior to max start timeout. This is a hard-coded shutdown. If detected, the control output will drive to the closed position. The control must return to a safe condition, determined as the powered-down or stopped state, prior to resuming operation.

Failure level and persistence: starting time > configured max start timeout

Run Enable Shutdown

Run Enable discrete input is opened, only active when this input is configured for use. This is a hard-coded shutdown.

Katolight Service - Master Repair Manual - Page 3040

Chapter 5.
Service Tool

Introduction

This chapter covers the process of installing and servicing the control via the L-Series Service Tool. It is assumed that the control has already been installed on the engine.

NOTE
Many applications are delivered pre-configured, calibrated, and tuned. These units do not require the use of the Service Tool.

Description

The Service Tool software is used to configure, tune, and troubleshoot the L-Series control. This chapter describes installation and use of the Service Tool. It identifies the parameters available that can be viewed. It also provides detailed information on configuring and setting up the L-Series to the customer-specific field application.

The Service Tool software resides on a PC (personal computer) and communicates to the L-Series through connector pins 4 and 6. An external RS-232 transceiver is necessary to make communications possible with the Woodward L-Series service tool. A connectivity kit (Woodward # 8923-1061) can be purchased from Woodward to accomplish this.

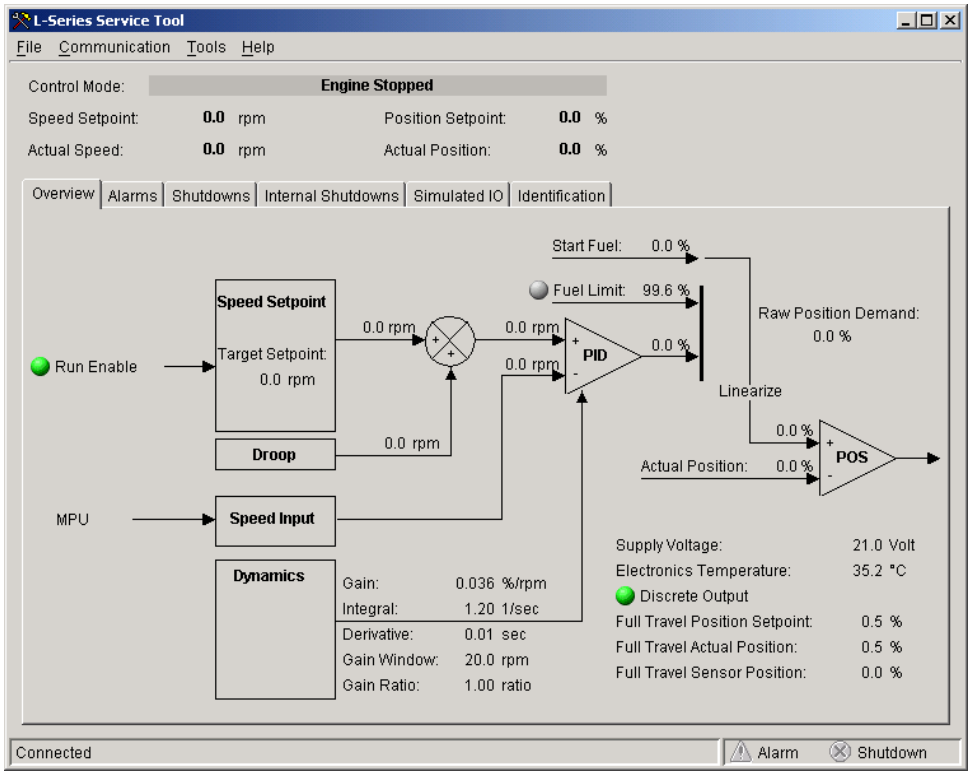

Figure 5-1. Example Service Tool Screen

Katolight Service - Master Repair Manual - Page 3041

The following hardware is required to work with the L-Series control:

- PC-compatible laptop or desktop computer* with at least one available serial communications port, and Windows 95/98/2000/NT/Me/XP as the operating system.
- Programming/datalink harness as shown in Figure 5-2.

In addition to the hardware, the following are the distributions of tool software needed to communicate with the control:

- Woodward part number 9927-1222, L-Series Service Tool

***—CAUTION**

There is a potential for serial port damage when communicating with the L-Series control. This is caused by a difference in ac voltage between neutral and earth ground. If the PC RS-232 port ground is referenced to ac neutral, and the L-Series control is referenced to battery ground (ac earth ground), a large amount of current can be experienced. To avoid this situation, we strongly recommend placing an isolation transformer between the ac outlet and the PC.

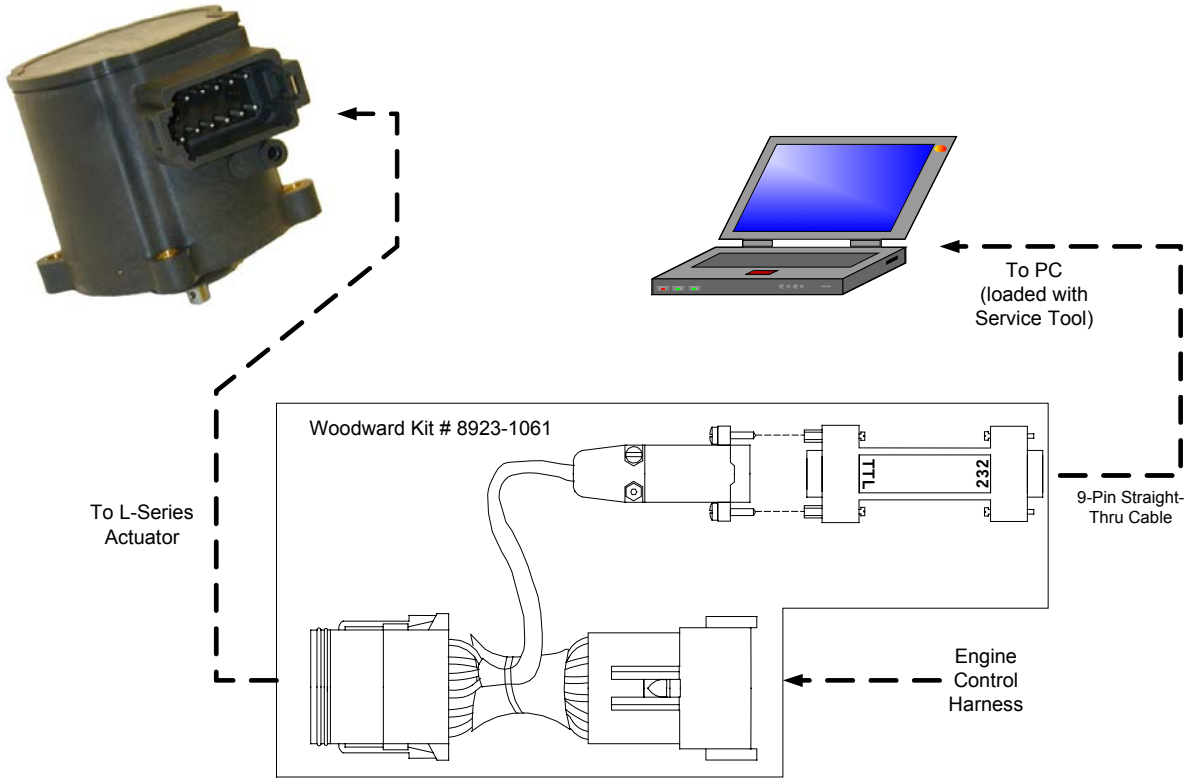

Pinouts Viewed Looking into Control Connector and Computer Connector

Figure 5-2a. Programming Harness Connections

Katolight Service - Master Repair Manual - Page 3042

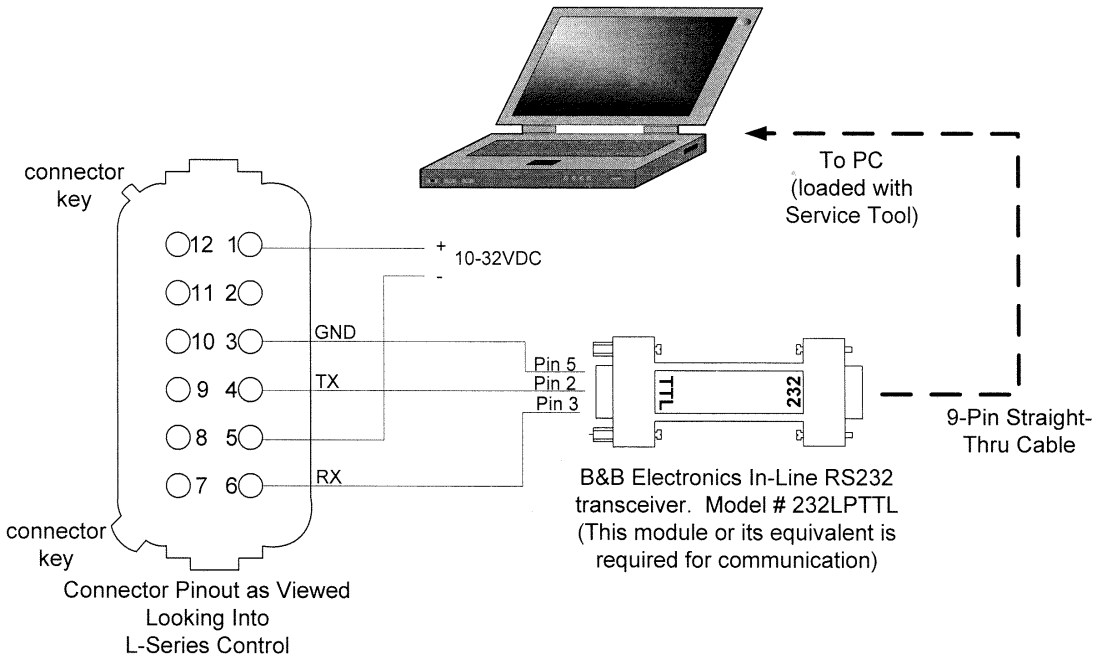

Figure 5-2b. Programming Harness Wiring

Getting Started

Installation Procedure

The Service Tool software can be downloaded and installed from the Woodward internet site (**www.woodward.com/software**).

What to do next

After the software is installed, connect a serial communications cable between the RS-232 connections on the L-Series control and an unused serial port on your computer. Run the Service Tool program and select the appropriate comm port. Once connected to the control, the status bar will display ‘connected’ and the Service Tool screen will populate with monitor parameters.

CAUTION
An unsafe condition could occur with improper use of these software tools. Only trained personnel should have access to these tools.

Service Tool Help

More help on using Service Tool is available and included with the installation of the Service Tool product. Service Tool Help can be accessed from the Service Tool ‘Contents’ drop-down window selection under the Help menu located on the Main Window.

Software Version Identification

The Service Tool software version can found by selecting ‘About’ under the Help menu. The software version is identified as the ‘Software Part Number’ on the Service Tool screen. The Service Tool and Control must be connected to view this information. Refer to this version information in any correspondence with Woodward.

Katolight Service - Master Repair Manual - Page 3043

Service Tool Security

Various levels of security are available to protect application settings. One password is available which provides the ability to inhibit tampering of control settings. The individual protection settings include a general password protection on configuration reading (from the control), configuration loading (to the control), position calibration, position PID tuning, and speed PID tuning.

Monitoring the Driver

The Service Tool has six different tab sheets to monitor driver parameters. The tab sheet screens include:

- Overview (see Figure 5-3)
- Alarms (see Figure 5-4)
- Shutdowns (see Figure 5-5)
- Internal Shutdowns (see Figure 5-6)
- Simulated I/O (see Figure 5-7)
- Identification (see Figure 5-8)

Each screen will display the L-series control mode, actual speed, speed setpoint, position setpoint, and actual position values.

Control Mode

Displays the state of the L-Series control, the present mode of the unit. Options include:

- Powered Down
- Engine Stopped
- Stopping
- Start Fuel 1
- Start Fuel 2
- Running Idle
- Ramping
- Running Rated 1
- Running Rated 2
- Ramping to Idle

Speed Setpoint

Displayed value of the speed setpoint - in rpm.

Actual Speed

Displayed value of the actual speed – in rpm.

Position Setpoint

Displayed value of the position demand - in percent.

Actual Position

Displayed value of the actual position - in percent.

Status Bar Indications

At the bottom of the Service Tool window is a status bar. The status bar has two sections. The bottom left section displays communication status and bottom right section displays alarm & shutdown status.

Katolight Service - Master Repair Manual - Page 3044

Communication Status

This section of the status bar shows the status of communication between the service tool and the L-Series.

- **Connected**—The Service Tool is connected to and communicating with the driver.
- **Not Connected**—The Service Tool is not connected to the driver.
- **Connecting**—The Service Tool is attempting to connect to the driver. This message is displayed when Connect is selected from the Communications menu or when attempting to re-establish communication to the driver. If the connection is lost it will continuously attempt to re-connect.

Alarm Status

One or more alarms on the Alarms screen is active.

Shutdown Status

One or more shutdowns on the Shutdowns or Internal Shutdowns screen is active.

Overview Parameters Screen

To monitor the overview parameters, go to the Overview page on the main window. This screen dynamically populates based on the unit's configuration. If a function is not programmed, then it will not appear.

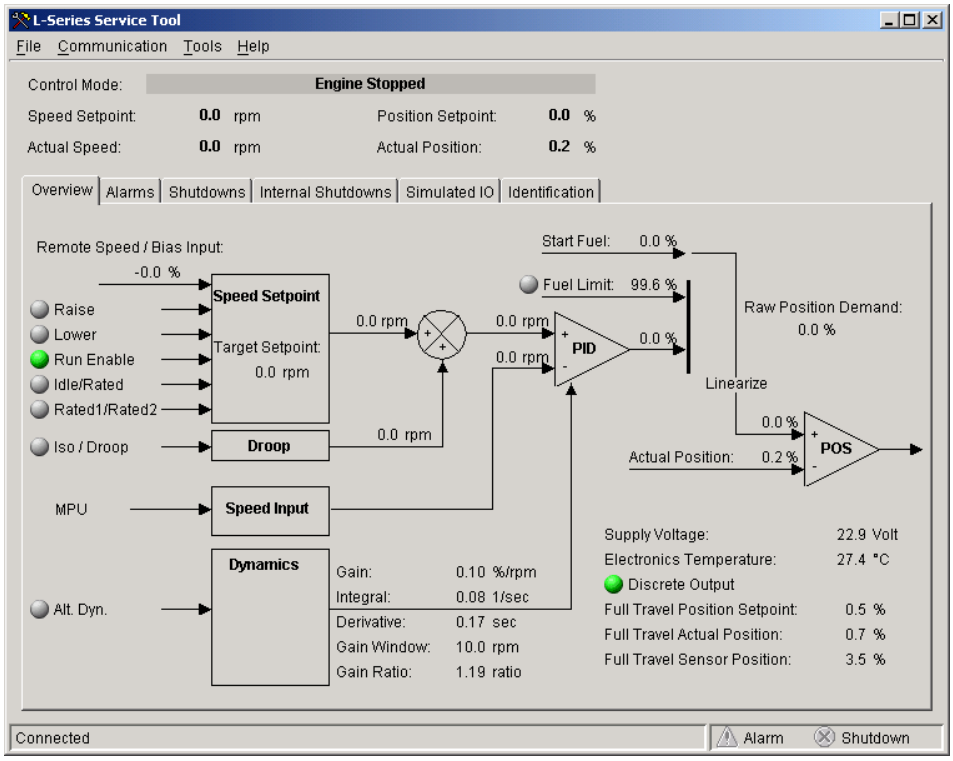

Figure 5-3. Service Tool—Overview Tab

Supply Voltage

Displayed value of the input power, in volts, as read by the processor.

Katolight Service - Master Repair Manual - Page 3045

Electronics Temperature

Displayed value of the electronics temperature sensor, in degrees Celsius, as read by the processor. The temperature sensor is physically located between the electronics module and the LAT motor.

Discrete Output

On/Off status of the discrete output command. The indicator is illuminated when the channel is commanded to ON and grayed-out when the command signal is OFF.

Full Travel Position Setpoint

Indication of the position setpoint in terms of total overall unit travel. Useful if a less than full-travel user-calibrated range is used.

Full Travel Actual Position

Indication of the actual position in terms of total overall unit travel. Useful if a less than full-travel user-calibrated range is used.

Full Travel Sensor Position

Indication of the position in terms of total overall unit travel before linearization. This value will match the TPS output.

Shutdown and Alarm Indications

The Shutdown and Alarm screens display the status of both active and logged fault conditions. The logged indications provide a history of events even after the unit has been power-cycled or run again.

 Indicates a logged alarm condition.

 Indicates an active alarm condition.

 Indicates a logged shutdown condition.

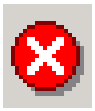 Indicates an active shutdown condition.

An active fault is one that is currently active or latched in the control. The latching/non-latching faults configuration setting factors into this indication. If the fault is latching, then an active fault could either be one that is still present or one that occurred but has not been reset. Latched faults can be cleared by cycling power on the L-Series control or by selecting the ‘Reset Alarms and Shutdowns’ button on any of the Alarm or Shutdown screens.

A logged fault is one that occurred but is no longer currently active or latched in the control. Logged faults are permanently cleared by selecting the ‘Reset Logged Alarms and Shutdowns’ button on any of the Alarm or Shutdown screens.

Katolight Service - Master Repair Manual - Page 3046

Alarms Screen

To monitor the alarm conditions, go to the Alarms page on the main window. The values displayed on this screen dynamically change with the fault configuration. Refer to Chapter 4 for a complete listing and details of all the faults.

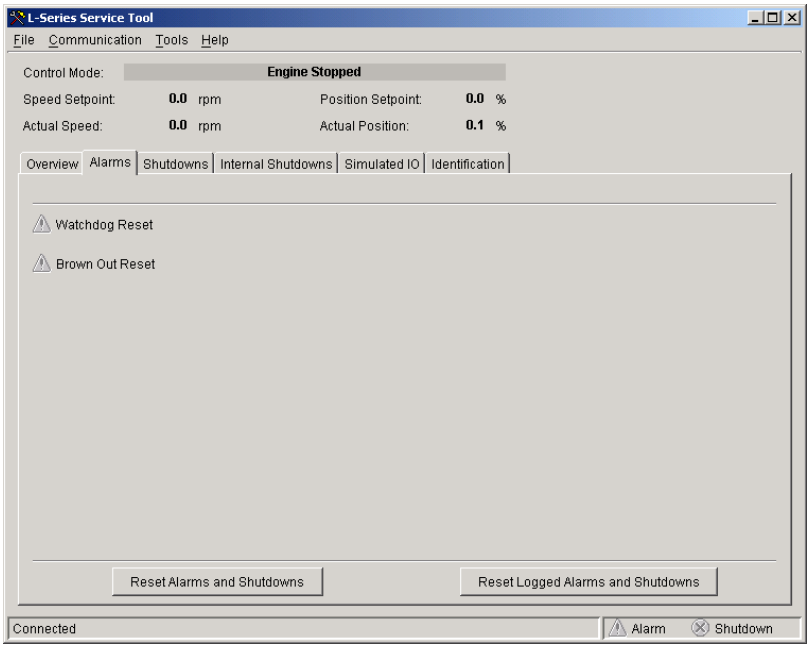

Figure 5-4. Service Tool—Alarms Tab

Katolight Service - Master Repair Manual - Page 3047

Shutdowns and Internal Shutdowns Screens

To monitor the shutdown conditions, go to the Shutdowns and the Internal Shutdowns pages (figures 5-5 and 5-6) on the main window. The values displayed on the Shutdowns screen dynamically change with the fault configuration. Refer to Chapter 4 for a complete listing and details of all the faults.

A reset command is available on these screens to clear any current alarms, if they are latched on. If a fault condition occurred but is no longer present, it will remain as a logged fault until cleared. The 'Reset Logged Alarms and Shutdowns' command will clear all logged faults.

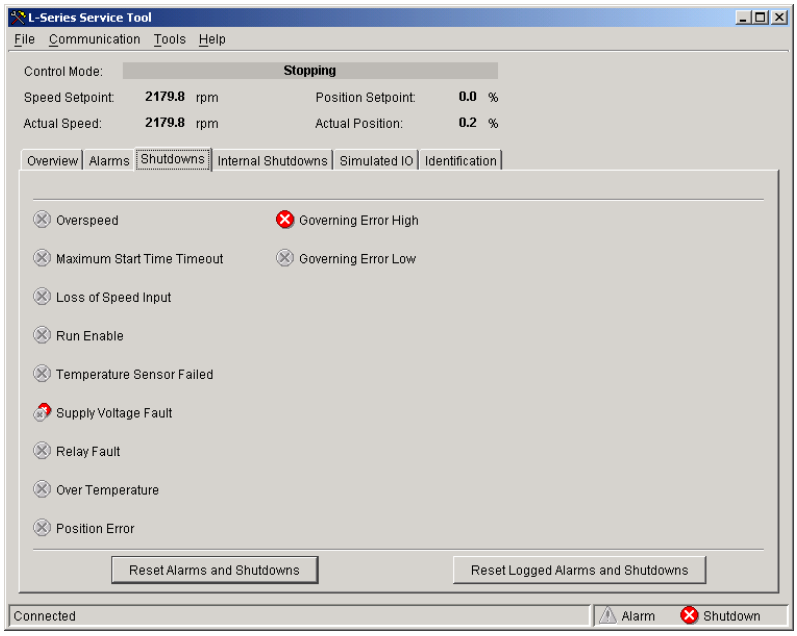

Figure 5-5. Service Tool—Shutdowns Tab

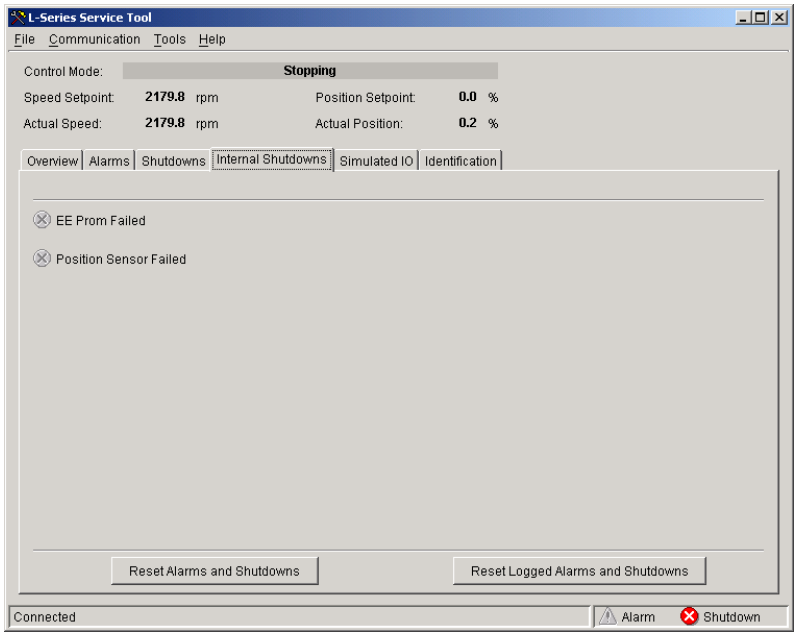

Figure 5-6. Service Tool—Internal Shutdowns Tab

Katolight Service - Master Repair Manual - Page 3048

Simulated I/O Screen

While communicating to the service tool, Aux 3 and Aux 4 inputs are not functional since these input pins are used for both Input (analog or discrete) and for serial communications. This screen is provided to facilitate operational testing while connected to the Service Tool. The Aux 3 & 4 Simulated Analog inputs simulate a fixed-value analog input signal, in percentage, and the discrete inputs can be simulated as closed (checked) and open (unchecked) using the Simulated Discrete Input checkboxes.

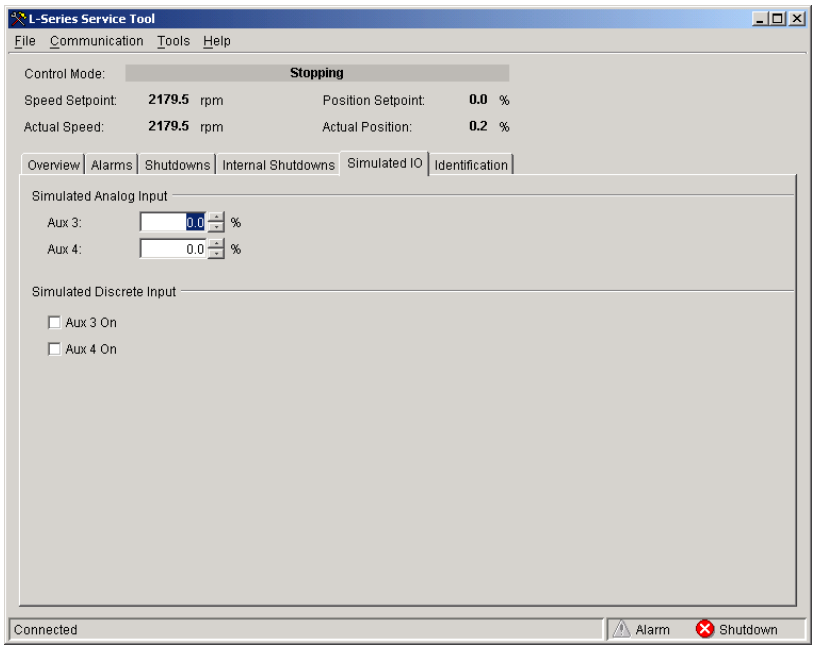

Figure 5-7. Service Tool—Simulated I/O Tab

Katolight Service - Master Repair Manual - Page 3049

Identification Screen

To monitor the L-Series product identification, go to the Identification page on the main window. Information displayed includes the part number of the embedded L-Series software, the serial number of the unit, the configuration filename, and the date of the last configuration change.

The Software Part Number identifies the embedded firmware part number and revision. The Serial Number is a Woodward tracking tool and is set at the factory.

The Configuration Identifier displays the first 8 characters of the loaded configuration file, and the Date of Last Configuration Change can be used to track changes to product configuration settings.

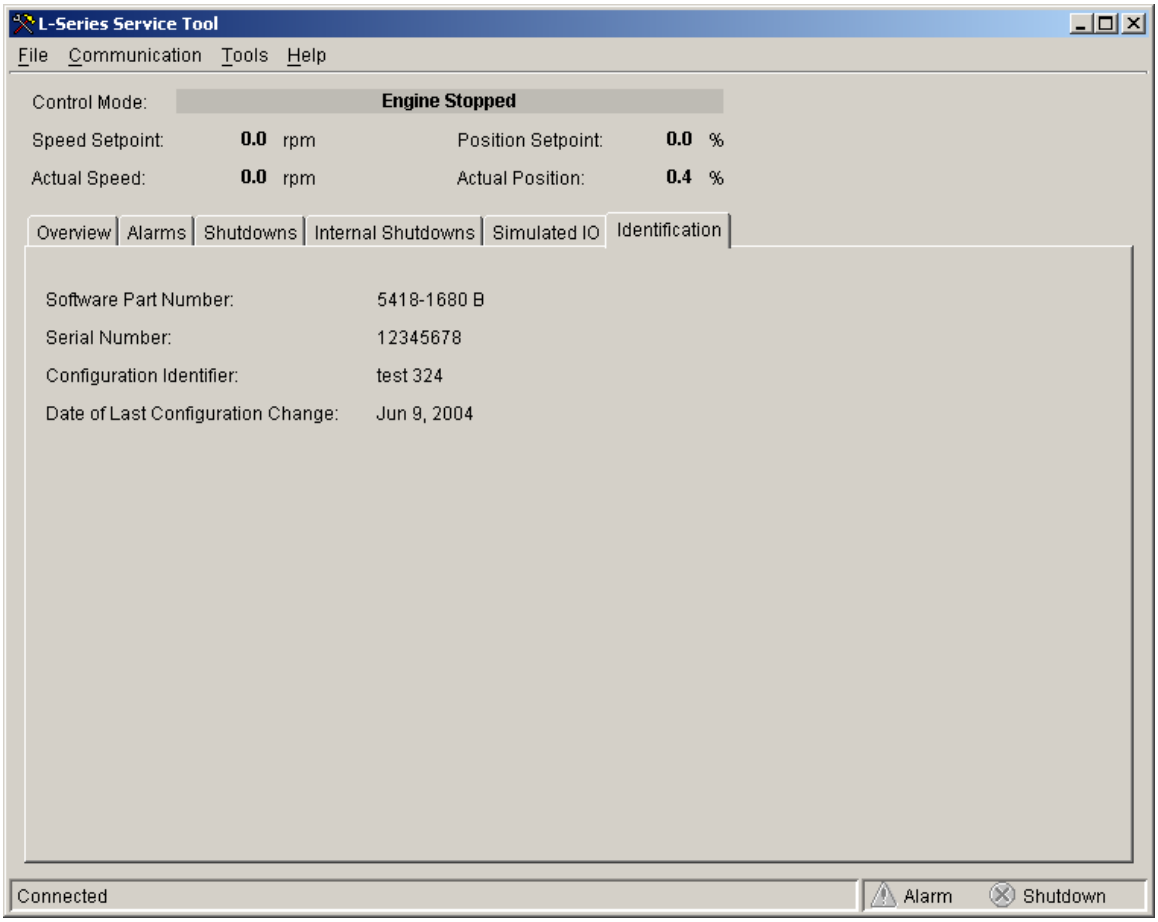

Figure 5-8. Service Tool—Identification Tab

Katolight Service - Master Repair Manual - Page 3050

Chapter 6.
Configuration

Overview

The L-Series is configured using the Service Tool. Refer to Chapter 5 for Service Tool installation and connection instructions.

The L-Series can be configured either on-line or off-line. On-line configuration can only be performed when the Service Tool is connected to and communicating with the L-Series control. Off-line configuration can be done at any time, however, settings will not take effect until they are loaded into the control.

NOTE
Many applications are delivered pre-configured, calibrated, and tuned. These units do not require the use of the Service Tool.

NOTE
Configuration reading and loading can be individually password protected for security purposes. If security is applied, these features will not be accessible without the password.

CAUTION
An unsafe condition could occur with improper use of these software tools. Only trained personnel should have access to these tools.

The current L-Series control configuration settings can be viewed at any time when connected to the control by opening the Configuration Editor (File/Open Control Configuration), assuming password protection is not active. See Figure 6-1.

NOTE
If using dynamics curves or fuel limiting curves, control power must be cycled after loading a new configuration before the new settings will take effect.

OEM Configuration File Data

The OEM can save configuration file specific data with the service tool by selecting Properties under the File menu pull down. This is a text field and can be used to store data such as:

- Customer
- Engine Type
- Application Type
- Notes

Configuring the Unit—On-Line

Unit configuration is summarized as follows:

1. Open the Configuration Editor Dialog by selecting ‘File/Open Control Configuration’.
2. Edit the configuration settings.
3. Load the configuration to the L-Series control.

Katolight Service - Master Repair Manual - Page 3051

NOTE
As changes are made to Configuration parameters, they are not used by the driver until a 'load' command is issued. Selecting the 'Cancel' button closes the Configuration Editor and does not make any changes to the driver.

Configuring the Unit—Off-Line

Unit configuration is summarized as follows:

1. Open the Configuration Editor Dialog using the File/New or File/Open options.
2. Edit the configuration settings.
3. Save the configuration to a file. At a later date simply open the configuration and load it into the control.

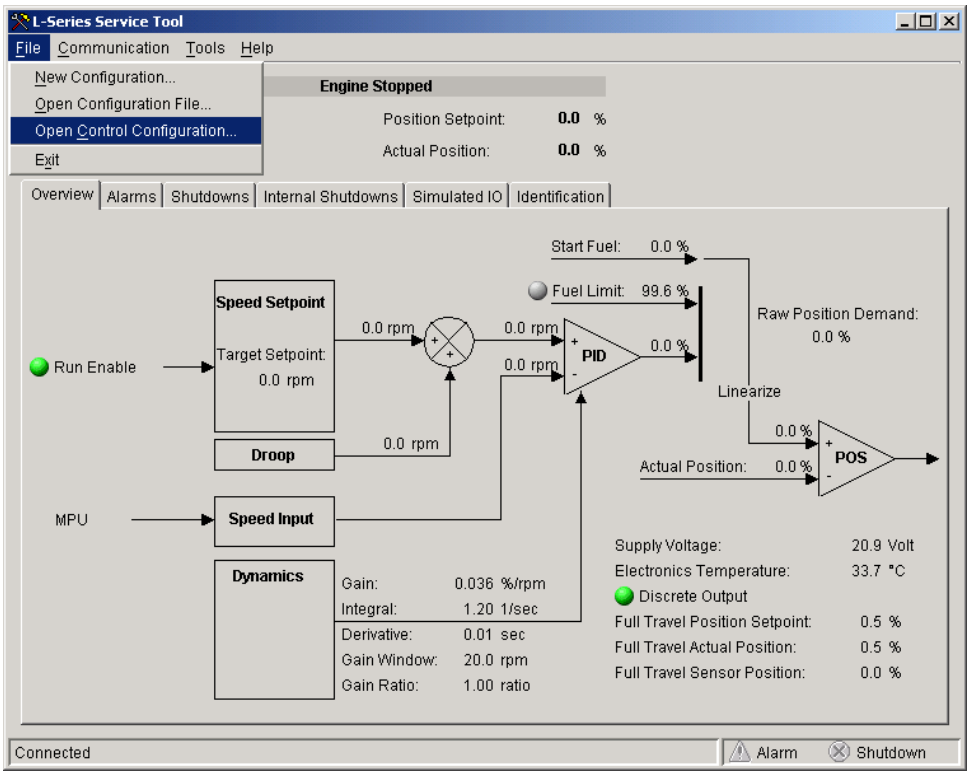

Figure 6-1. Configuration Selection Options

Configuration Parameters

There are 9 different screens that display the configuration settings in the L-Series speed control: Overview, Setpoint, Control, Modifiers, Fuel Limiting, Dynamics, Discrete I/O, Alarm/Shutdown, and Security.

Katolight Service - Master Repair Manual - Page 3052

Overview Tab

The overview tab provides speed sensing and position control configuration settings.

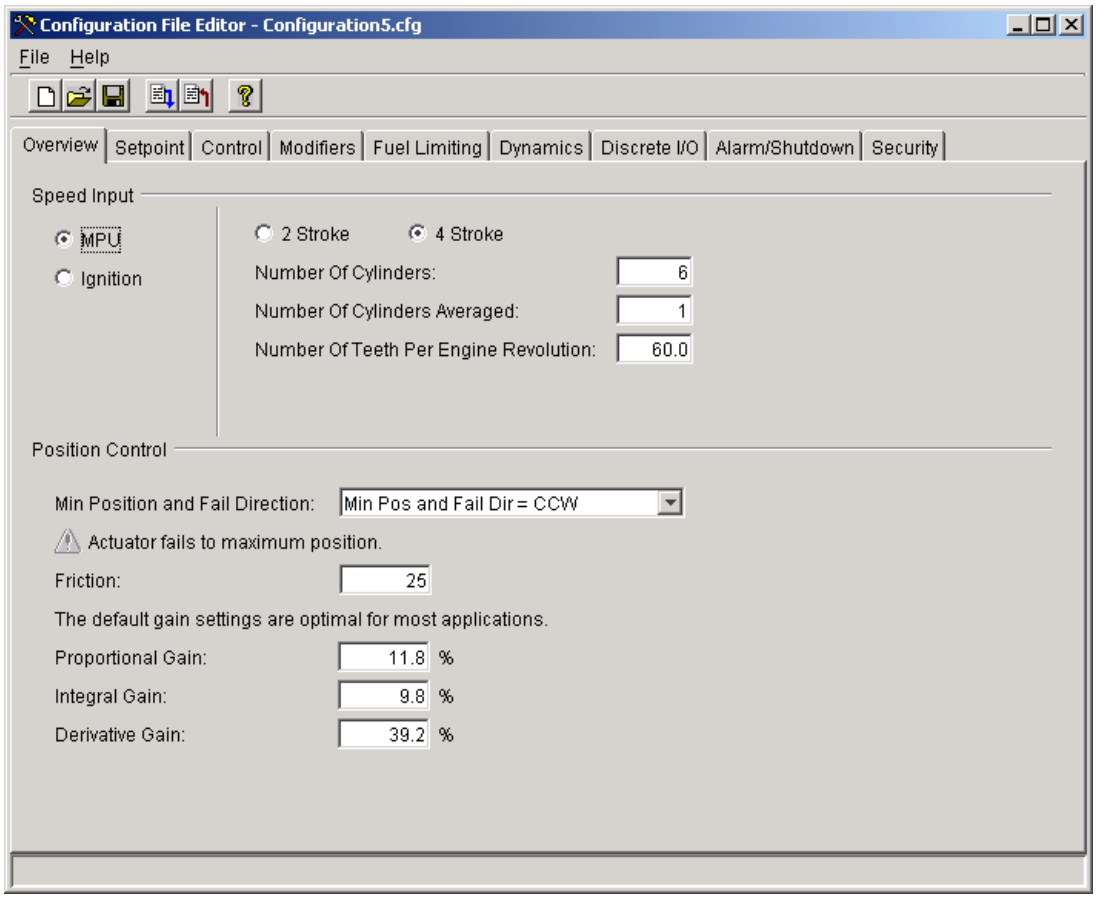

Figure 6-2. Configuration Editor—OVERVIEW TAB

Speed Input Configuration Settings

These settings are used to determine the conversion from speed input pulses to engine rpm, as well as engine torsional filtering. Based on the security settings, the speed input configuration settings (with the exception of the sensor type) can also be modified from the Edit Speed Settings selection under the Tools menu (refer to Chapter 7, Editing of Speed Settings).

Sensor Type
Set to either MPU or Ignition. This function requires engine speed pulses present on either the ignition pin input (pin 12) or the MPU pin input (pin 11).

Engine Type
Set to either 2-stroke or 4-stroke.

Number of Cylinders
Sets the number of cylinders. From the sample table below, select the value that corresponds to the number of crankshaft degrees between ignition pulses.
Allowed values: 1—20

Katolight Service - Master Repair Manual - Page 3053

# cylinders	Degrees between pulses (4-stroke engines)	Degrees between pulses (2-stroke engines)
1	720	360
2	360	180
3	240	120
4	180	90
5	144	72
6	120	60
8	90	45

Number of Cylinders Averaged
Sets the number of cylinders to be averaged by the speed sensing algorithm. This setting is used as a filter to minimize the effects of firing torsionals that occur normally in reciprocating engines. A lower value gives less filtering, increases steady-state speed variation but allows for better transient response. A higher value reduces steady-state speed variation but slows transient response. If unsure, set this to either '1' or half the 'Number of Cylinders' for a 4-stroke. On a 2-stroke engine, '1' or 'Number of Cylinders' are good choices.

For uneven firing patterns, 'Number of Cylinders Averaged' should be set to eliminate repeating torsionals.

Allowed values: 1 to 'Number of Cylinders'.

Number of Teeth per Engine Revolution
Sets the number of teeth seen by the speed sensor during one engine revolution. This value is used to calculate the engine speed based on MPU frequency. This value is not displayed when 'Ignition' is configured. Allowed values: 1–720.

Position Control Configuration Settings

The position control controls the position of the shaft based on the position command setting from the speed control logic.

NOTE
For most applications, the default gains do not need to be changed; however, Min Position and Fail Direction should be checked.

Min Position and Fail Direction
Sets the direction for minimum position and fail direction. An alert is displayed (Actuator fails to maximum position.) to warn the user should the fail direction and min fuel direction be opposite.

Friction/Dither Setting
Sets the position control's friction and dither values. This parameter should be set to zero (no effect) while tuning the PID and then increased for optimum response. Increasing this setting increases both the dither amount and a non-linear output component. If unsure, typical values would be between 10 and 25. Allowed values: 0–100.

Proportional Gain
Sets the position control PID's proportional gain. Increased gain corresponds to increased PID output (higher proportional = faster response). This setting can also be dynamically adjusted using the PID Tuning screen. If unsure, a typical value would be 11.8 . Allowed values: 0–100%

Katolight Service - Master Repair Manual - Page 3054

Integral Gain
Sets the position control PID's integral gain. Increased gain corresponds to increased PID output (higher integral = faster response). This setting can also be dynamically adjusted using the PID Tuning screen. If unsure, a typical value would be 9.8 . Allowed values: 0–100%

Derivative Gain
Sets the position control PID's derivative gain. Increased gain corresponds to increased PID output (higher derivative = faster response). This setting can also be dynamically adjusted using the PID Tuning screen. If unsure, a typical value would be 39.2 . Allowed values: 0–100%

Setpoint Tab

The setpoint tab provides the speed setpoint configuration settings. Based on the security settings, the speed setpoint configuration settings (with the exception of the mode) can also be modified from the Edit Speed Settings selection under the Tools menu (refer to Chapter 7, Editing of Speed Settings).

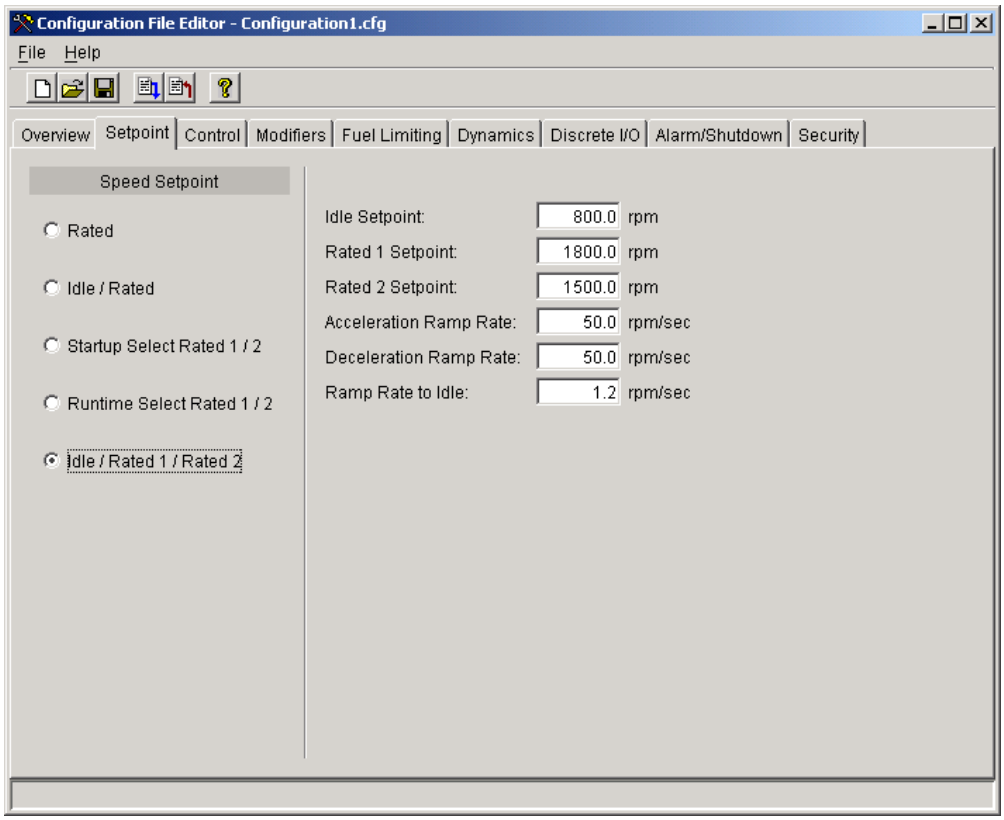

Figure 6-3. Configuration Editor—SETPOINT TAB

Mode
The Mode determines how the speed setpoint will function. This setting determines the display of additional configuration parameters.

Rated—Single speed setpoint control—at rated speed.
Idle / Rated—Two speed setpoint control, idle and rated. Must configure an Idle/Rated discrete input to provide this function (see Discrete I/O tab).
Start-up Select Rated 1/2—Setpoint uses 2 rated speeds, selected on unit start-up. Must configure a Rated2 discrete input to provide this function (see Discrete I/O tab).

Katolight Service - Master Repair Manual - Page 3055

Runtime Select Rated 1/2—Setpoint uses 2 rated speeds, selectable at any time. Must configure a Rated2 discrete input to provide this function (see Discrete I/O tab).
Idle / Rated 1/ Rated 2—Three speed setpoint control, idle and rated 1 and rated 2. Must configure an Idle/Rated discrete input and a Rated2 discrete input to provide this function (see Discrete I/O tab).

Idle Setpoint
Sets the Idle Setpoint. Only displayed if Idle is used. Allowed values: 0–4000 rpm, but must be less than Rated.

Rated (or Rated 1) Setpoint
Sets the Rated (Rated 1) Setpoint. Allowed values: 0–4000 rpm, but must be greater than Idle.

Rated 2 Setpoint
Sets the Rated 2 Setpoint. Only displayed if Rated 2 is used. Allowed values: 0–4000 rpm, but must be greater than Idle.

Acceleration Ramp Rate
Setpoint ramp rate, in rpm/sec, when increasing to a rated setpoint. Allowed values: 1–1000 rpm/s.

Deceleration Ramp Rate
Setpoint ramp rate, in rpm/sec, when decreasing to a rated setpoint. Allowed values: 1–1000 rpm/s.

Ramp Rate to Idle
Setpoint ramp rate, in rpm/sec, when idle speed is selected. Only displayed if Idle is used. Allowed values: 1–1000 rpm/s.

Katolight Service - Master Repair Manual - Page 3056

Control Tab

The control tab provides engine start and stop configuration settings.

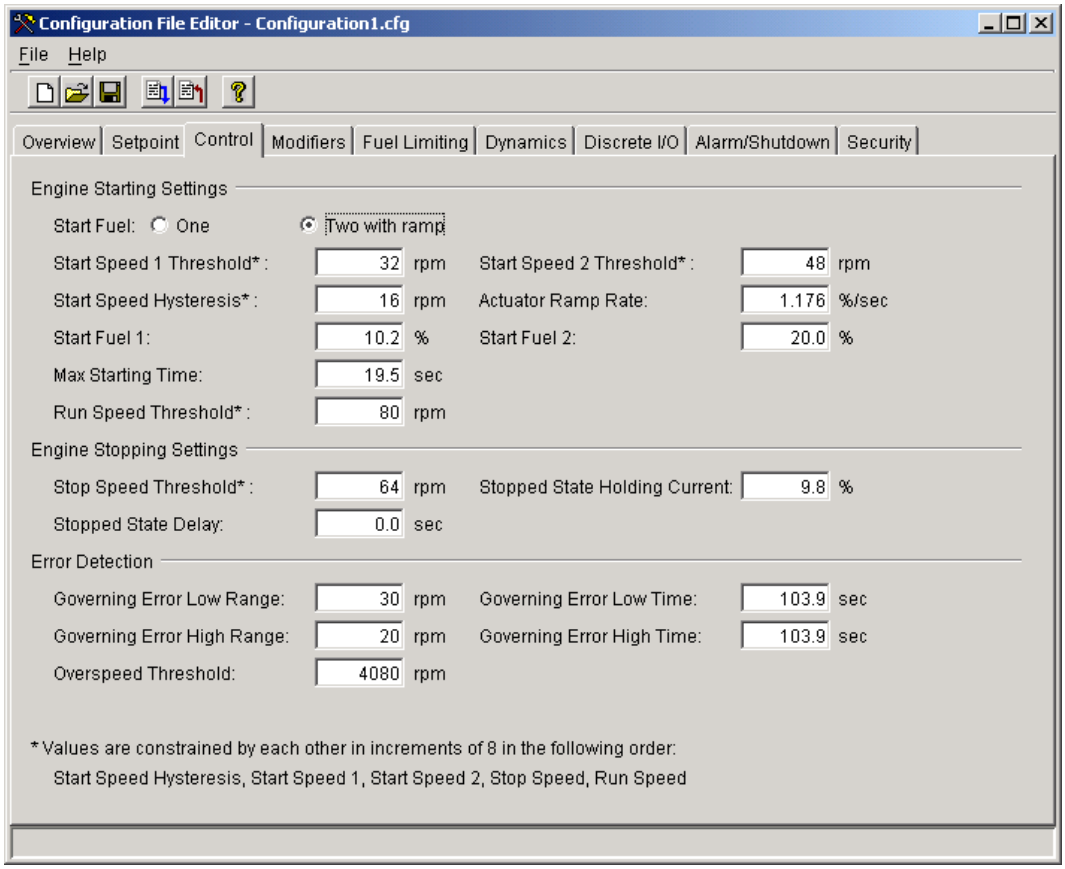

Figure 6-4. Configuration Editor—CONTROL TAB

The L-Series speed settings must follow the following general order.

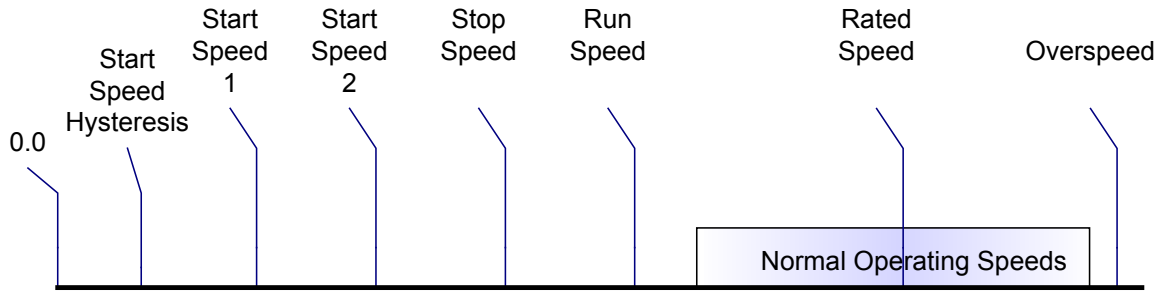

Starting the Engine

The engine starting sequence will look like this, if no errors are detected:

Katolight Service - Master Repair Manual - Page 3057

While in power down, enable the control by the Run enable input. The actuator will go into position control and the control is ready. Start the engine. The engine speed will increase above the Start Speed 1 Threshold, and will go to the Start Fuel position demand. The control is still running open loop, the speed control PID is not controlling to the actuator position. Once the engine speed is above the run speed threshold, the control will switch from start fuel demand to the fuel demand from the speed PID. At this point the unit is in speed control and will control the engine to the speed setpoint. The PID position during starting will be trimmed to the start fuel values, therefore the switch from start fuel to PID control will be performed without a jump in position. If the speed setpoint jumps, the PID position could jump depending on the Gain, Integral, and Derivative settings of the speed PID.

If an error is detected, the control will go to the stopping state. Once the engine speed decreases to zero rpm and the stopping delay is timed out, the unit will be in the stopped state.

Engine Starting Settings

Start Fuel

Set to either one start fuel setting or 2 start fuel settings with a ramp between the settings. A single start fuel is suitable for most applications. With this configuration, the fuel demand immediately switches to the Start Fuel 1 setting when the engine speed has exceeded the Start1 Speed setting.

Dual start fuel configuration is appropriate for engines that need a rather high fuel setting to start the engine, but a much lower setting immediately thereafter to minimize speed overshoot, minimize black smoke, or to prevent an overspeed shutdown.

Start Speed 1 Threshold

Start Speed 1 Threshold is set below the starter speed. Once this threshold is exceeded, the control determines a start is in progress and opens the actuator to the start fuel setting. At this point the governor state changes from ‘Stopped’ to ‘Start Fuel 1’. Typical value is 64 rpm to detect engine cranking.

Allowed values: 16–4000 in 8 rpm increments but must be less than ‘Start Speed 2 Threshold’ (if used) and less than the ‘Stop Speed Threshold’.

Start Speed Hysteresis is provided for the start speed threshold to ensure that a normal amount of variance in engine speed while in the Start Fuel State does not cause the control to enter the Stopping state. After the control has reached the Start Fuel state, it will go to the Stopping state if engine speed drops below the (Start Speed 1 Threshold – Start Speed Hysteresis) value.

Allowed values: 50% of Start Speed 1 to ‘Start Speed 1 Threshold’ in 8 rpm increments.

Start Fuel 1

Specifies the maximum permitted shaft position when the governor state is ‘Start Fuel 1’. Typical value is the same as the full load actuator position.

Allowed values: 0–100%

Katolight Service - Master Repair Manual - Page 3058

Start Speed 2 Threshold
Specifies the speed at which the Governor State changes from ‘start1’ to ‘start2.’ Typical value is 50% of the lowest speed reference. Only displayed if two start fuel limits are configured.

Allowed values: Must be between ‘Start Speed 1 Threshold’ and the ‘Stop Speed Threshold’, in 8 rpm increments.

Start Fuel 2
Specifies the maximum permitted shaft position when the governor state is ‘Start Fuel 2’. Only displayed if two start fuel limits are configured.

Allowed values: 0–100%

Actuator Ramp Rate
Specifies the rate, in %/s, the control will move the actuator position from the Start Fuel 1 to the Start Fuel 2 position once the speed exceeds the Start Speed 2 Threshold. If the ramp rate is set to its maximum value, the change to the second start fuel setting is nearly instantaneous, essentially eliminating the ramp feature. Only displayed if two start fuel limits are configured.

Allowed values: 0.235–200%/s

Max Starting Time
This is the maximum time the engine is allowed to stay within the Start Fuel state. This is used to make sure that if there is a problem starting the engine, it will be stopped after a reasonable amount of time.

Allowed values: 0–400 s

Run Speed Threshold
Specifies the speed at which the Governor State changes from ‘Start Fuel’ to ‘running.’ Typical value is 90% of the lowest speed reference. If the engine speed is above the Run Speed Threshold, the control will switch to one of the running states and start using the speed control to drive the actuator position demand.

Allowed values: Must be greater than ‘Stop Speed Threshold’ and less than 4000, in 8 rpm increments.

Engine Stopping Settings

Stop Speed Threshold
Specifies the speed at which the Governor State changes from ‘Stopping’ to ‘Stopped’. If the engine is stopped by a shutdown, the control will go to the Stopping state and the engine must stop before proceeding to any other state. If the engine is stopped by the Run Enable input, the control will again go to the Stopping state. In this case, however, if engine speed is still above the Stop Speed Threshold, making the Run Enable switch active again will allow the control to go directly back to the running state. Below the Stop Speed Threshold, the control will not allow the engine to restart.

Allowed values: Must be greater than ‘Start Speed Threshold’ and less than ‘Run Speed Threshold’, in 8 rpm increments.

Katolight Service - Master Repair Manual - Page 3059

Stop State Delay
The Stopped State Delay setting delays the change from the Stopping state to the Engine Stopped state (where the engine can be started again). This is done to prevent starting the engine when it is still turning and the speed input has failed. This time should be set to the time it will take the engine to come to a full stop from the Start Speed 1 Threshold. Above the Start Speed 1 Threshold, the speed signal loss will result in a speed sensor failure, and the engine will not restart until the control is reset.

Allowed values: 0–400 s

Stopped State Holding Current
In the stopped state the control will drive the actuator closed with the Stopped State Holding Current. This is a percent value of steady state current of the actuator. This acts like a return spring (electrical return spring) if the power to the actuator is still there. This will help with diesel pump application or throttle application where it is important to keep the actuator at the closed position if the engine is stopped.

Allowed values: 0–100%

Error Detection Settings

Governing Error Low Range
Maximum error setting to trigger a Governing Error Low fault.

Allowed values: 0–4000 rpm

Governing Error Low Time
Governing Error Low speed range persistence, in seconds, prior to indicating a fault.

Allowed values: 0–400 s

Governing Error High Range
Maximum error setting to trigger a Governing Error High fault.

Allowed values: 0–4000 rpm

Governing Error High Time
Governing Error High speed range persistence, in seconds, prior to indicating a fault.

Allowed values: 0–400 s

Overspeed Threshold
Specifies the speed level that will trigger an overspeed shutdown fault.

Allowed values: 0–4080 rpm, but must be greater than Rated

Katolight Service - Master Repair Manual - Page 3060

Modifiers Tab

The modifiers tab provides droop and speed setpoint biasing configuration settings.

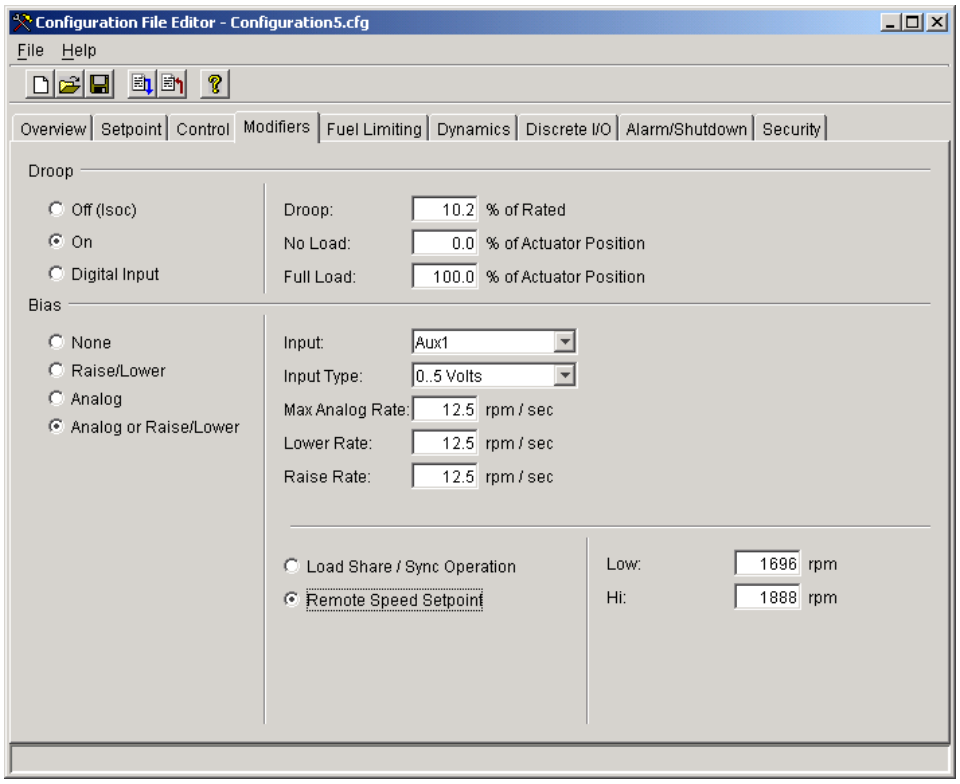

Figure 6-5. Configuration Editor—Modifiers Tab

Droop Settings

Droop Mode

Determines what methods of adjustment of the speed setpoint are to be allowed.

Off–no droop is used, unit to remain in isochronous speed control.

On–actuator position droop is always enabled and active above Idle speed.

Digital Input–actuator position droop is enabled based on the droop discrete input. If this is selected, a digital input must be configured for this function (see Discrete I/O tab).

Droop

Sets the percentage of actuator position droop when droop is enabled.

Allowed values: 0–100%

No Load

Sets the no load actuator position percentage for the droop function. Below this actuator position the droop is zero.

Allowed values: 0% up to the ‘Full Load’ setting

Full Load

Sets the full load actuator position percentage for the droop function.

Allowed values: From the ‘No Load’ setting up to 100%

Katolight Service - Master Repair Manual - Page 3061

Bias Settings

Bias Mode

Determines what methods of adjustment of the speed setpoint are to be allowed.

None–no biasing of the speed setpoint is used.
Raise/Lower–raise and lower setpoint adjustment commands are used. Must configure raise and lower discrete I/O points to provide this function (see Discrete I/O tab).
Analog–analog biasing of the speed setpoint is used.
Analog or Raise/Lower–a combination of raise/lower and analog biasing are used to adjust the speed setpoint. Must configure raise and lower discrete I/O points to provide this function (see Discrete I/O tab).

Analog Input Selection

Configures the analog input to the AUX hardware input. A 'normal' input is scaled such that 0 V input provides the minimum speed setting and a 5 V input corresponds to the maximum setting as defined by the Bias Limit or Low/High Limit settings. An 'inverted input' selection is available to reverse the direction, resulting in a 5 V minimum and a 0 V maximum speed setpoint command.

Max Analog Rate

Specifies the maximum ramping rates allowed for the speed setpoint Analog adjust function. Only displayed if Analog is configured.

Allowed values: 1–1000 rpm/s

NOTE
It is recommended the Max Analog Rate setting be set to a value that will prevent overshoot and possible overspeed on enabling of the Remote Input.

Lower Rate

Specifies the ramping rate for the speed setpoint Lower function. Only displayed if the Raise/Lower function is configured.

Allowed values: 1–1000 rpm/s

Raise Rate

Specifies the ramping rate for the speed setpoint Raise function. Only displayed if the Raise/Lower function is configured.

Allowed values: 1–1000 rpm/s

Analog Operational Mode

Determines how the analog input range will be applied to the speed setpoint.

Load Share / Sync Operation–biasing is based on a percentage band around the speed setpoint (±10%).
Remote Speed Setpoint–biasing values are set to a specific speed range (1000 to 2000 rpm).

Bias Limit

Specifies the maximum desired speed band possible, as a percentage of Rated, possible with the Raise/Lower Adjust or Analog functions.

Allowed values: 0–100% of speed setpoint

Katolight Service - Master Repair Manual - Page 3062

Low Limit
Specifies the lowest desired speed setpoint possible with the Raise/Lower Adjust or Analog functions.

Allowed values: From zero rpm to the 'High Limit'.

High Limit
Specifies the highest desired speed setpoint possible with the Raise/Lower Adjust or Analog functions.

Allowed values: From the 'Low Limit' up to 4000 rpm.

NOTE
Due to a limitation of the Aux1 analog input, the Low Limit may need to be set to a value about 3% below the desired minimum speed setting when using AUX1. Aux 2–4 do not exhibit this limitation.

Fuel Limiting Tab

The fuel limiting tab provides run time and boost fuel limiting configuration settings.

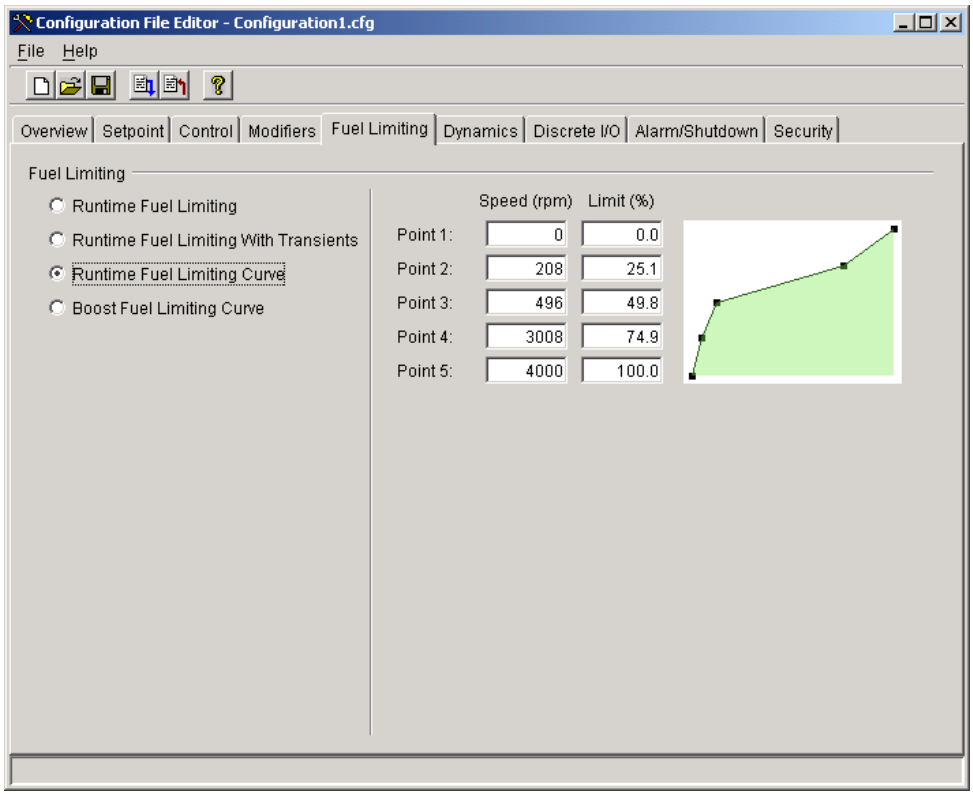

Figure 6-6. Configuration Editor—Fuel Limiting Tab

Katolight Service - Master Repair Manual - Page 3063

Fuel Limiting Settings

Mode
Determines the runtime fuel limiting mode.

Runtime Fuel Limiting–a max actuator position will be used to limit commanded fuel position.
Runtime Fuel Limiting with Transients–a steady-state and a transient fuel limit will be used.
Runtime Fuel Limiting Curve–a speed-based curve will be used to determine the fuel limit percentage.
Boost Fuel Limiting Curve–a speed-based curve will be used to determine the fuel limit percentage.

Maximum Fuel Limit
Sets the maximum permitted shaft position. Only displayed if the mode is set to either Runtime Fuel Limiting or Boost Fuel Limiting Curve.

Allowed values: 0–100%

Steady State Fuel Limit
Sets the maximum permitted actuator commanded position during steady state conditions. Only displayed if the mode is set to Runtime Fuel Limiting with Transients.

Allowed values: 0–100%

Transient Fuel Limit
Sets the maximum actuator position during a transient where the fuel demand is above the Steady State Fuel Limit. Only displayed if the mode is set to Runtime Fuel Limiting with Transients.

Allowed values: 0–100%

Transient Fuel Limit Time
Determines the length of time the Transient Fuel Limit will be applied during a transient. Only displayed if the mode is set to Runtime Fuel Limiting with Transients.

Allowed values: 0–400 s

Speed (rpm)
Allowed values: Each point [5] must be larger than the previous and less than the next value, in increments of 16 rpm.

Limit (%)
Sets the maximum actuator positions [5] based on the current speed.

Allowed values: 0–100%

NOTE
If the Boost or Runtime fuel limiting curve inputs are changed, control power must be cycled before the changes will take effect.

Boost Fuel Limiting Curve Settings

These settings are only displayed if the fuel limiting mode is set to Boost Fuel Limiting Curve.

Katolight Service - Master Repair Manual - Page 3064

Analog Input
Configures the boost/map analog input to the AUX hardware input. A 'normal' input is scaled such that 0 V input provides a 0% boost signal and a 5 V input corresponds to a 100% boost signal. An 'inverted input' selection is available to reverse the direction, resulting in a 5 V minimum and a 0 V maximum boost input signal.

If Aux1 input is used, the input can be configured as either 0–5 V or ±3 V. If configured as ±3 V, replace 0 V by –3 V and 5 V by +3 V in the above discussion.

Input Type
Only displayed if the Input is selected as 'Aux1'. Set to either 0–5 V or ±3 V.

Boost (%)
Allowed values: Each point [5] must be larger than the previous and less than the next value, in increments of 1.2 percent.

Limit (%)
Sets the maximum actuator positions [5] based on the boost analog input.

Allowed values: 0–100%

Dynamics Tab

The dynamics tab provides speed control dynamics settings. The dynamic settings can also be adjusted from the Edit Speed Dynamics screen during run-time.

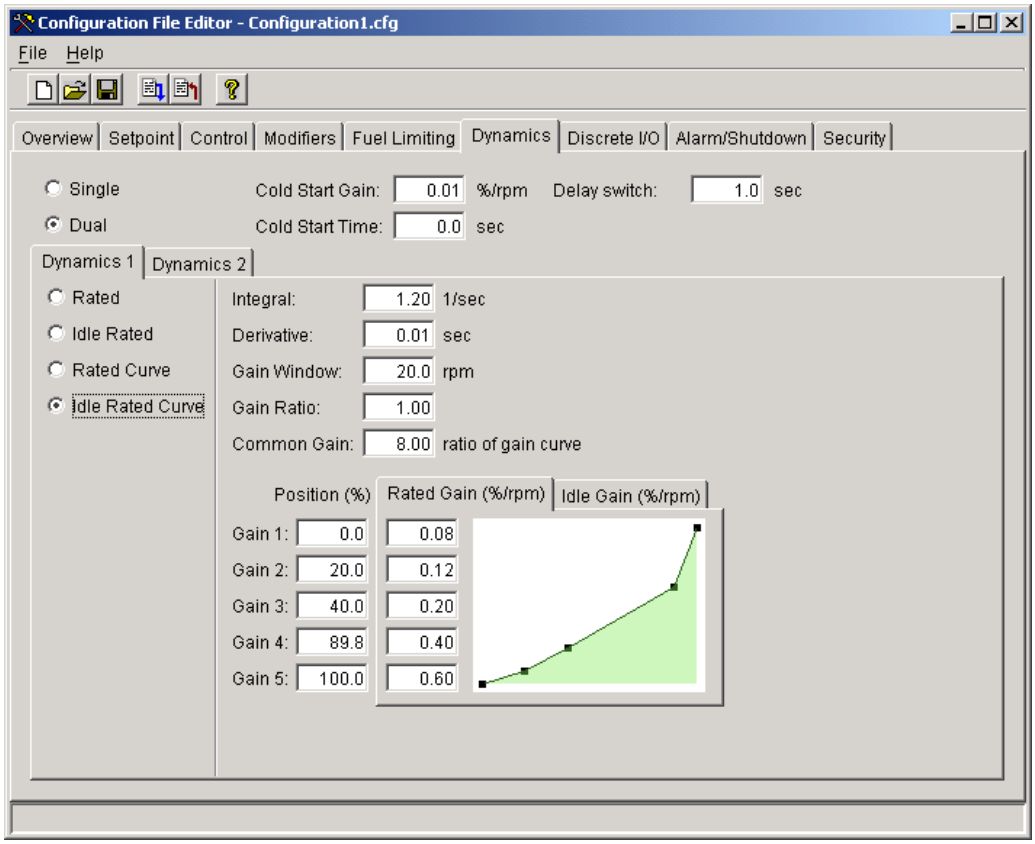

Figure 6-7. Configuration Editor—Dynamics Tab

Katolight Service - Master Repair Manual - Page 3065

Dynamics Settings

Overall Mode

Set to Single or Dual dynamics. If 'Dual' is selected, must configure a Dual Dynamics discrete input to provide this function (see Discrete I/O tab).

Cold Start Gain

Sets the gain to be used during a start. Typically this is set to a lower than normal gain value. To disable the Cold Start Gain, set the Cold Start Gain Timer to zero.

Allowed values: 0–0.778 %/rpm

Cold Start Gain Timer

Sets the number of seconds the Cold Start Gain is used during a start. To disable the Cold Start Gain, set the Timer to zero.

Allowed values: 0–300 s

Delay switch (between Dyn 1 and Dyn 2)

The delay, in seconds, before the dynamics actually changes to the selected set (either from dynamics 1 to dynamics 2 or vice versa).

Allowed values: 0–425 s

Mode (Dynamics 1 and 2)
Sets the functional mode for the P-gain term of the PID. This can be individually set for both sets of dynamics, if used.

Rated–a single speed gain term is used which remains constant and does not vary with engine speed or load. These are simple dynamics that suit most constant speed applications. Rated dynamics are typically used on engines that operate continuously at rated speed or on variable speed engines that tend to be stable at all speeds with constant dynamic settings.

Idle Rated–the gain term will be changed linearly between Idle and Rated speed. Idle gain applies when operating at idle speed. Rated gain applies when operating at rated speed. The gain varies linearly between the two settings at intermediate speeds and is limited by the idle and rated gain setting at speeds below idle and above rated. Idle/Rated dynamics are useful for variable speed engines that tend to be less stable at idle speed with optimum rated speed dynamic settings. Must configure an Idle/Rated discrete input to provide this function (see Discrete I/O tab).

Rated Curve–the gain term will be adjusted based on actuator position using a 5-pt curve. Fuel demand is roughly proportional to load but not necessarily in a linear manner. A 5-breakpoint gain curve is provided to map gain versus fuel demand. Gain is applied linearly between breakpoints. A common gain setting is also provided to shift all gain curve gains higher or lower. This gain curve is particularly useful for non-linear fuel systems (for example, intake butterfly valves).

Idle Rated Curve–the gain will be adjusted using both by actuator position and speed. Must configure an Idle/Rated discrete input to provide this function (see Discrete I/O tab).

NOTE
Selection of Dynamics 2 curve options is only allowed if Dynamics 1 is also set to a curve option.

Katolight Service - Master Repair Manual - Page 3066

Integral
Speed control PID integral term in repeats per second.

Allowed values: 0–19.16 repeats/s

Derivative
Speed control PID derivative term in seconds.

Allowed values: 0–1.66 s

Gain Window
Speed control PID gain window, in rpm. When the speed error is greater than the window, the Gain is multiplied by the Gain Ratio.

Allowed values: 0–255 rpm

Gain Ratio
Speed control PID gain ratio. When the speed error is greater than the window, the Gain is multiplied by the Gain Ratio. To disable the dual gain window, set the Gain Ratio to 1.

Allowed values: 1–15

Position (%)
Position breakpoints for the gain curve.

Allowed values: Each point [5] must be larger than the previous and less than the next value, in increments of 0.4 percent. Range: 0–100%

Gain (%/rpm)
Sets the gain value [5] based on the position.

Allowed values: 0–0.778 %/rpm

Common Gain
Speed control PID common gain. This setting is a multiplier on the entire gain curve settings. A Common Gain setting of 1 provides no bias.

Allowed values: 0–8

Katolight Service - Master Repair Manual - Page 3067

Discrete I/O Tab

The Discrete I/O tab provides discrete input and discrete output configuration settings.

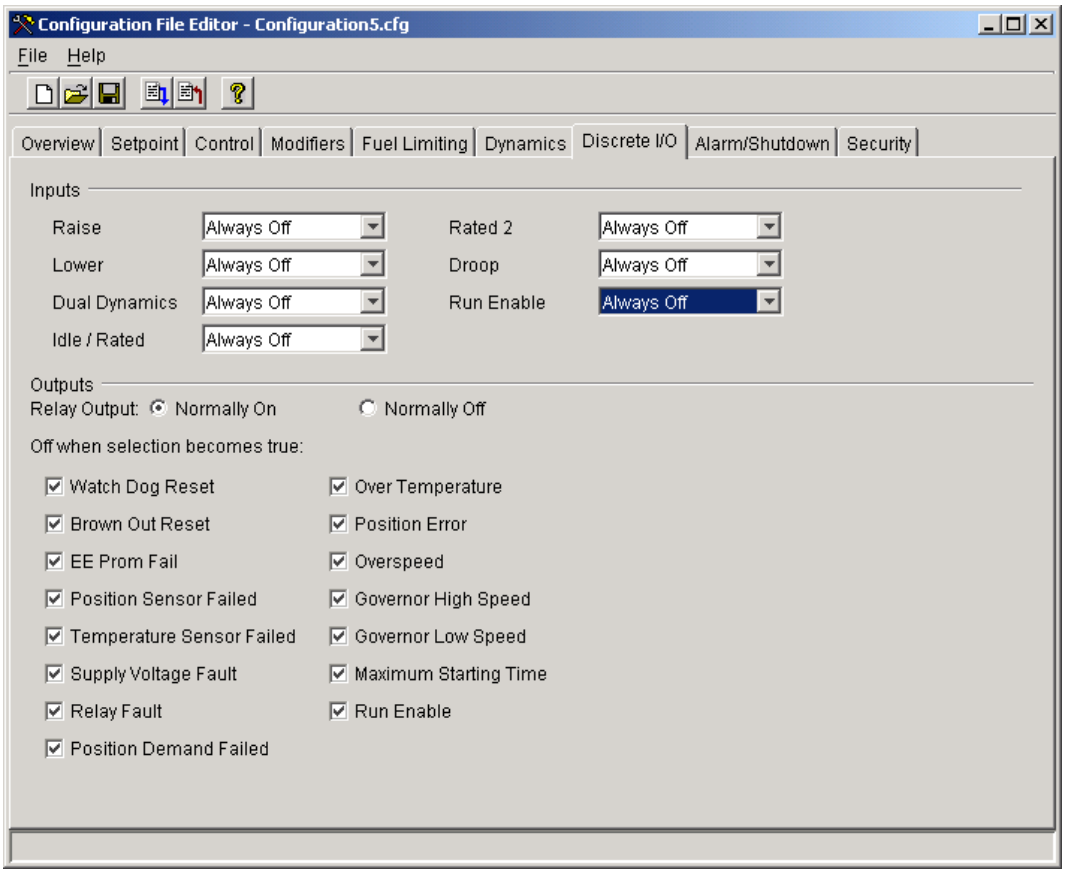

Figure 6-8. Configuration Editor—Discrete I/O Tab

Input Configurations

This section facilitates the mapping of the control functions to the desired Aux input. Options include:

- Always Off
- Aux1 (active closed)
- Aux2 (active closed)
- Aux3 (active closed)
- Aux4 (active closed)
- Aux1 (active open)
- Aux2 (active open)
- Aux3 (active open)
- Aux4 (active open)
- Always On

Any unused function is typically turned off by selecting ‘Always Off’, the exception to this is the Run Enable which requires an ‘Always On’ selection or the control will never run.

Selecting ‘Active Closed’ for a function will activate a function whenever the aux input voltage is above the ON threshold (refer to the Specifications section for On and Off thresholds). Likewise, selecting ‘Active Open‘ will activate the function when the aux input is below the OFF threshold. An “Active Closed’ setting is recommended.

Katolight Service - Master Repair Manual - Page 3068

Input Configuration Settings

Raise
Select the desired input for this function.

Lower
Select the desired input for this function.

Dual Dynamics
Select the desired input for this function.

Idle / Rated
Select the desired input for this function.

Rated 2
Select the desired input for this function.

Droop
Select the desired input for this function.

Run Enable
Select the desired input for this function.



WARNING
It is recommended that all inputs be configured for the failsafe 'Active Closed' mode, to ensure maximum fault protection.

Output Settings

Relay Output Configuration
The relay output can be configured to one of the following:

Normally On–Sets the relay driver to a normally on mode that turns off for any of the faults selected. This is the preferred, failsafe output configuration.

Normally Off–Sets the relay driver to a normally off mode that turns on for any of the faults selected.



WARNING
It is recommended that the Relay Output be configured for the failsafe 'Normally On' mode, to ensure maximum fault protection and annunciation. Failure to follow these guidelines could, under exceptional circumstances, lead to personal injury and/or property damage.

Relay Output Fault Selections
The list of faults displayed can be individually selected to activate the relay output. Any of the selected faults will either turn the output off if configured for Normally On or turn the output on if configured for Normally Off.



WARNING
It is recommended that all faults be configured to activate the discrete output, this ensures maximum fault annunciation.

Katolight Service - Master Repair Manual - Page 3069

Alarm / Shutdown Tab

The Alarm/Shutdown tab provides alarm and shutdown configuration settings.

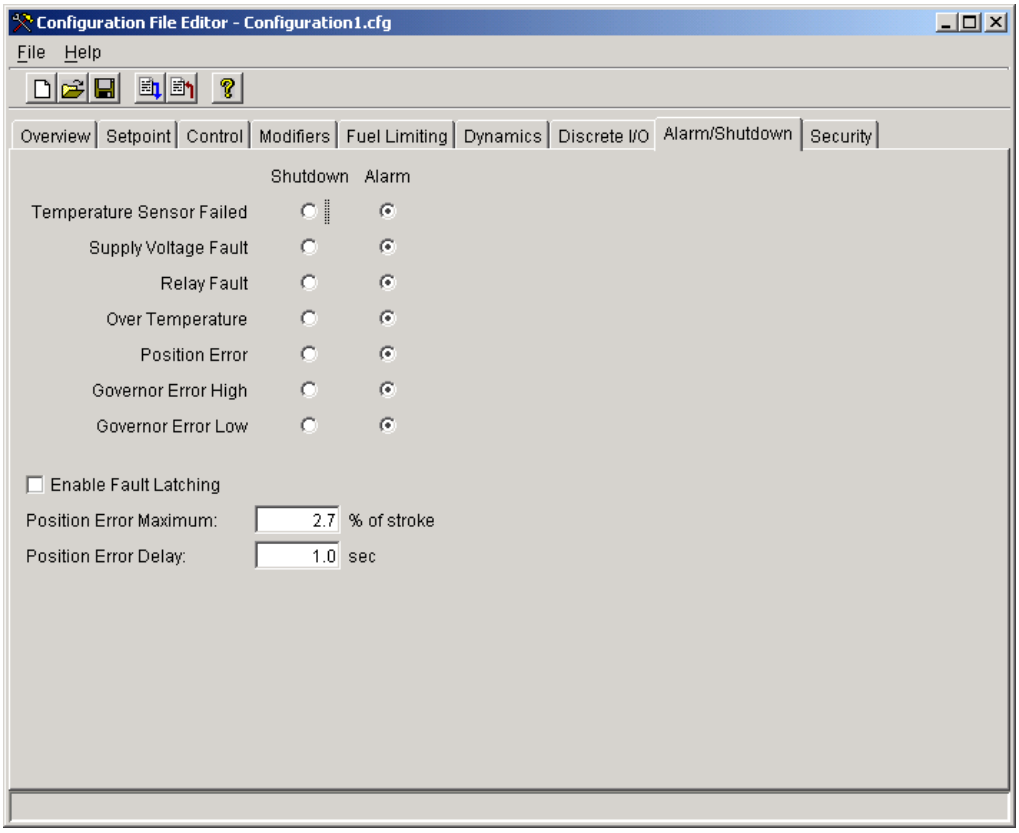

Figure 6-9. Configuration Editor— Alarm/Shutdown Tab

Alarm / Shutdown Fault Settings

Fault Selection (Shutdown or Alarm)

Set the desired action for each of the faults from the list. Setting the selection to a Shutdown will position the output to the configured Fault Direction (see Overview tab). Setting the selection to an Alarm will allow the unit to attempt to continue running. For details on each of these fault conditions, refer to the Fault section in the manual (Chapter 4).

- Temperature Sensor Failed
- Supply Voltage Fault
- Relay Fault
- Over Temperature
- Position Error
- Governor Error High Speed
- Governor Error Low Speed

The following conditions are dedicated shutdown conditions.

- EE Prom Fail
- Position Sensor Failed
- Overspeed
- Max Starting Time
- Loss of Speed Input
- Run Enable

Katolight Service - Master Repair Manual - Page 3070

The following conditions are dedicated alarm conditions.

- Watch Dog Reset
- Brown Out Reset



WARNING

It is recommended that all faults be configured as shutdowns and selecting 'Enable Fault Latching', this ensures maximum fault protection and prevent erratic on/off fault behavior.

Enable Fault Latching
Set to either latching (checked) or non-latching. When set to latching, a reset command or a power cycle must be issued to clear the fault. When non-latching is configured, as the fault condition goes away the control will be ready for operation. The fault log will indicate any faults that have occurred and subsequently cleared.

Position Error Maximum
Sets the magnitude of the position error fault.

Allowed values: 0–100% of stroke

Position Error Delay
Sets the delay that the position error must persist before indicating a position error fault.

Allowed values: 0–10 s

Katolight Service - Master Repair Manual - Page 3071

Security Tab

The security tab provides the security configuration settings. To use any security, the Read Configuration security must be configured for use. Once selected, the Security Password must be set (Figure 6-11). One common password is used for all security selections. The password entry is prompted (Figure 6-12) whenever a secured function is selected by the user.

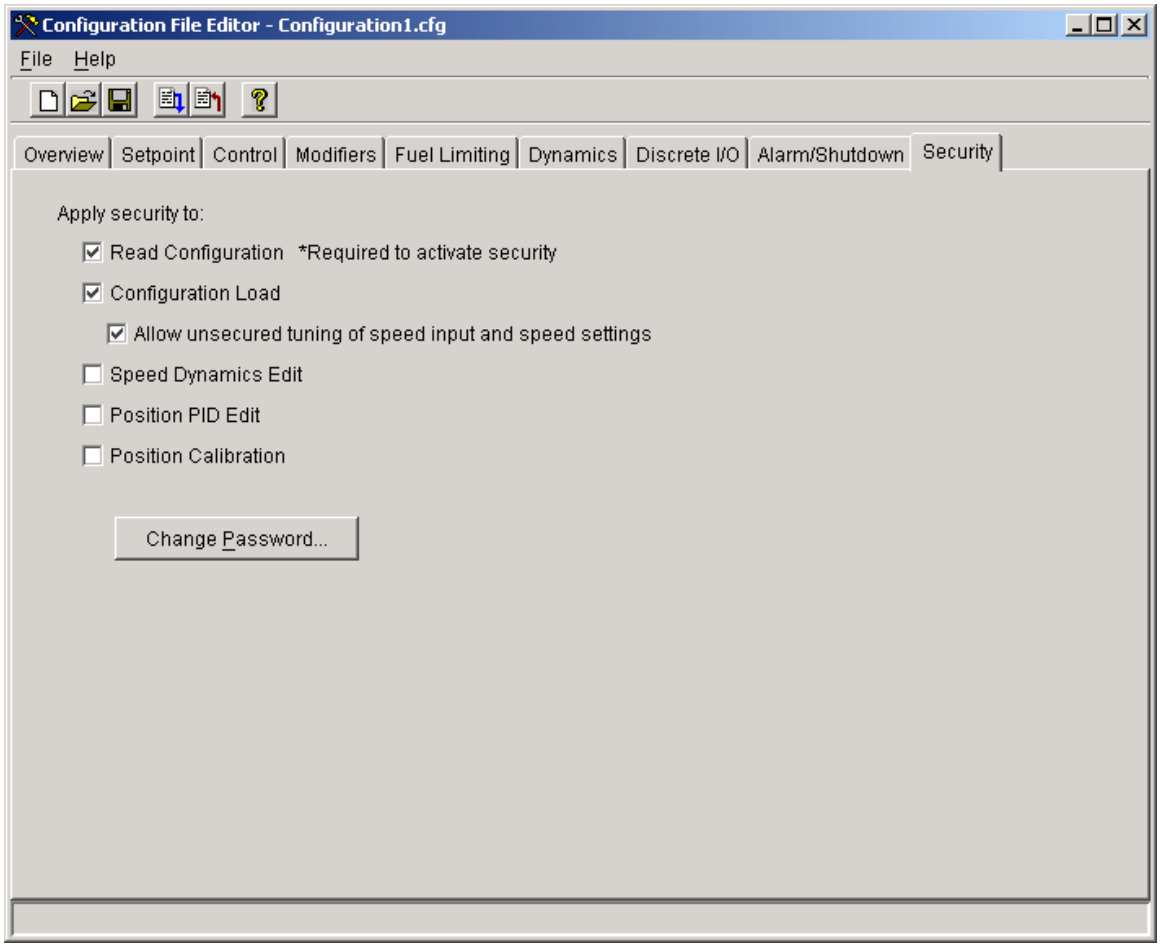

Figure 6-10. Configuration Editor—Security Tab

Security Configurations

All checked features will have the security password enforced prior to allowing the function. Unchecked features will not be prompted with a password.

Read Configuration
When checked, requires a password before the configuration can be read from the L-Series control (protects Open From Control execution).

This is the minimum level of protection and is required in order to use any other security option.

Configuration Load
When checked, requires a password before a configuration can be loaded into the L-Series control (protects Load to Control execution).

Katolight Service - Master Repair Manual - Page 3072

Allow unsecured tuning of speed input and speed settings
When checked, allows password-free access to speed and speed setpoint adjustments from the Edit Speed Settings menu item. To use this feature, the Configuration Load security option must be selected.

Speed Dynamics Edit
When checked, requires a password before allowing tuning to the speed PID (protects Edit Speed Dynamics screen).

Position PID Edit
When checked, requires a password before allowing tuning to the position PID (protects Edit Position PID screen).

Position Calibration
When checked, requires a password before the position calibration mode can be entered (protects Manual and Automatic Position Calibration screens).

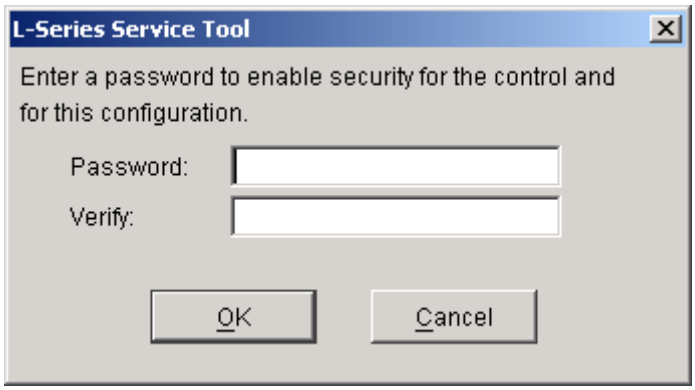

Figure 6-11. Security Tab Set Password Pop-up

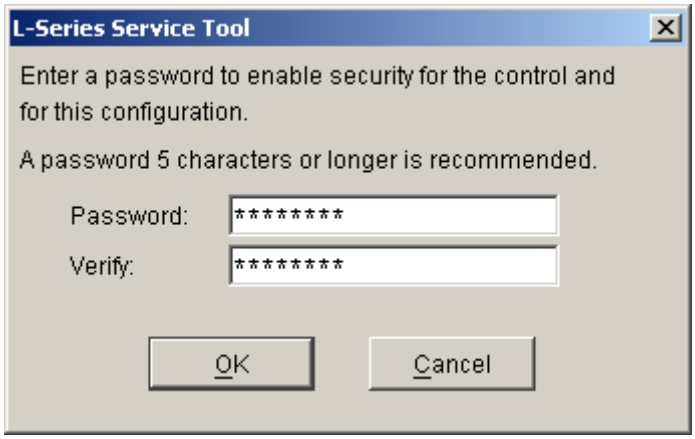

Figure 6-12. Password Entry Prompt

Loading the Configuration (Save)

Select the File/'Load to Control' option from the menu or Blue Arrow icon on the Configuration Editor to load the changes into the control. The L-Series speed must be zero prior to allowing a 'Load' command. This feature can be optionally password protected.

Katolight Service - Master Repair Manual - Page 3073

Configuration Checks

Whenever a configuration is saved or loaded to the control, some basic checks are performed. This check cannot determine is the values are realistic, but it makes sure that values are loaded into the required parameters. If an error is found, the Service Tool will not allow the load or save function to be performed until the error is corrected. Warnings are displayed for the purpose of configuration confirmation, but they will not inhibit the save or load function.

Configuration Errors

1. **Speed Setpoint has not been selected**–A speed setpoint mode must be configured prior to use. See Setpoint tab.
2. **Speed Input has not been configured**–The speed settings must be configured prior to use. See Speed Input section on Overview tab, specifically check the 2 Stroke or 4 Stroke selection.
3. **Improperly configured speed settings (Overspeed setting, Number of Cylinders, or Stroke)**–The speed settings have been configured beyond the sensing limits of the L-Series input capability. This only affects speed inputs configured as ignition. See the Control (for overspeed threshold) and Overview (for speed settings) tabs.
4. **Overspeed threshold must be greater than idle setpoint**–A properly set speed configuration is detected. The Overspeed Threshold must be set to a level higher than the Idle speed setpoint. See the Setpoint and Control tabs.
5. **Overspeed threshold must be greater than rated setpoint**–A properly set speed configuration is detected. The Overspeed Threshold must be set to a level higher than the Rated speed setpoint. See the Setpoint and Control tabs.
6. **Overspeed threshold must be greater than rated 1 setpoint**–A properly set speed configuration is detected. The Overspeed Threshold must be set to a level higher than the Rated1 speed setpoint. See the Setpoint and Control tabs.
7. **Overspeed threshold must be greater than rated 2 setpoint**–A properly set speed configuration is detected. The Overspeed Threshold must be set to a level higher than the Rated2 speed setpoint. See the Setpoint and Control tabs.
8. **Rated setpoint must be greater than the idle setpoint**–A properly set speed configuration is detected. The Rated speed setpoint must be set to a level higher than the Idle speed setpoint. See the Setpoint and Control tabs.
9. **Rated 1 setpoint must be greater than the idle setpoint**–A properly set speed configuration is detected. The Rated1 speed setpoint must be set to a level higher than the Idle speed setpoint. See the Setpoint tab.
10. **Rated 2 setpoint must be greater than the idle setpoint**–A properly set speed configuration is detected. The Rated2 speed setpoint must be set to a level higher than the Idle speed setpoint. See the Setpoint tab.
11. **Password must be set when security is enabled**–To use security, a password must be selected. See Security tab.
12. **Configured Run-Enable discrete in as Always Off**–The Run Enable discrete input cannot be Always Off or the unit will never run. See the Discrete I/O tab.
13. **When dynamics 2 is set to rated-curve mode, dynamics 1 must be in rated-curve or idle-rated-curve mode**–An incompatibility between the Dynamics modes has been detected. To use the Rated curve dynamics option for dynamics 2, the Rated curve or Idle/Rated curve option must be selected for dynamics 1. See the Dynamics tab.

Katolight Service - Master Repair Manual - Page 3074

14. **When dynamics 2 is set to idle-rated-curve mode, dynamics 1 must be in idle-rated-curve mode**–An incompatibility between the Dynamics modes has been detected. To use the Idle/Rated curve dynamics option for dynamics 2, the Idle/Rated curve option must also be selected for dynamics 1. See the Dynamics tab.
15. **Configured Dual Dynamics but no Dual-Dynamics discrete in**–An incompatibility between the Dynamics mode and Dual Dynamics discrete input is detected. To use the Idle/Rated dynamics option, the Dual Dynamics discrete input cannot be Always Off. See the Dynamics and Discrete I/O tabs.
16. **Configured Idle/Rated Dynamics but no Idle/Rated discrete in**–An incompatibility between the Dynamics mode and Idle/Rated discrete input is detected. To use the Idle/Rated dynamics option, the Idle/Rated discrete input cannot be Always Off. See the Dynamics and Discrete I/O tabs.
17. **Configured Idle/Rated Dynamics Curve but no Idle/Rated discrete in**–An incompatibility between the Dynamics mode and Idle/Rated discrete input is detected. To use the Idle/Rated curve dynamics option, the Idle/Rated discrete input cannot be Always Off. See the Dynamics and Discrete I/O tabs.
18. **Configured Idle/Rated Speed Setpoint but no Idle/Rated discrete in**–An incompatibility between the Speed setpoint mode and Idle/Rated discrete input is detected. To use the Idle/Rated option, the Idle/Rated discrete input cannot be Always Off. See the Setpoint and Discrete I/O tabs.
19. **Configured Rated1/Rated2 Speed Setpoint but no Rated2 discrete in**–An incompatibility between the Speed setpoint mode and Rated2 discrete input is detected. To use the Rated1/Rated2 option, the Rated2 discrete input cannot be Always Off. See the Setpoint and Discrete I/O tabs.
20. **Configured Idle/Rated1/Rated2 Speed Setpoint but no Idle/Rated discrete in**–An incompatibility between the Speed setpoint mode and Rated2 discrete input is detected. To use the Idle/Rated1/Rated2 option, the Rated2 discrete input cannot be Always Off. See the Setpoint and Discrete I/O tabs.
21. **Configured Idle/Rated1/Rated2 Speed Setpoint but no Rated2 discrete in**–An incompatibility between the Speed setpoint mode and Rated2 discrete input is detected. To use the Idle/Rated1/Rated2 option, the Rated2 discrete input cannot be Always Off. See the Setpoint and Discrete I/O tabs.
22. **Configured Droop Digital Input but no Droop discrete in**–An incompatibility between the Droop mode and Droop discrete input is detected. To use the Droop Discrete input option, the Droop discrete input cannot be Always Off or Always On. See the Modifiers and Discrete I/O tabs.
23. **Configured Raise/Lower Bias but no Raise discrete in**–An incompatibility between the Speed setpoint and Raise Speed discrete input is detected. To use the Speed Setpt Raise/Lower, the Raise discrete input cannot be Always Off or Always On. See the Setpoint and Discrete I/O tabs.
24. **Configured Raise/Lower Bias but no Lower discrete in**–An incompatibility between the Speed setpoint and Lower Speed discrete input is detected. To use the Speed Setpt Raise/Lower, the Lower discrete input cannot be Always Off or Always On. See the Setpoint and Discrete I/O tabs.
25. **Configured Analog or Raise/Lower Bias but no Raise discrete in**–An incompatibility between the Speed setpoint and Raise Speed discrete input is detected. To use the Speed Setpt Analog or Raise/Lower option, the Raise discrete input cannot be Always Off or Always On. See the Setpoint and Discrete I/O tabs.
26. **Configured Analog or Raise/Lower Bias but no Lower discrete in**–An incompatibility between the Speed setpoint and Lower Speed discrete input is detected. To use the Speed Setpt Analog or Raise/Lower option, the Lower discrete input cannot be Always Off or Always On. See the Setpoint and Discrete I/O tabs.

Katolight Service - Master Repair Manual - Page 3075

27. **Rated Speed Setpoint mode selected and Idle Rated Dynamics selected**–An incompatibility between the Speed setpoint and Speed Dynamics is detected. See the Setpoint and Dynamics tabs.
28. **Rated Speed Setpoint mode selected and Idle Rated Curve Dynamics selected**–An incompatibility between the Speed setpoint and Speed Dynamics is detected. See the Setpoint and Dynamics tabs.
29. **Startup Select Rated 1/2 mode selected and Idle Rated Dynamics selected**–An incompatibility between the Speed setpoint and Speed Dynamics is detected. See the Setpoint and Dynamics tabs.
30. **Startup Select Rated 1/2 mode selected and Idle Rated Curve Dynamics selected**–An incompatibility between the Speed setpoint and Speed Dynamics is detected. See the Setpoint and Dynamics tabs.
31. **Runtime Select Rated 1/2 Mode selected and Idle Rated Dynamics selected**–An incompatibility between the Speed setpoint and Speed Dynamics is detected. See the Setpoint and Dynamics tabs.
32. **Runtime Select Rated 1/2 Mode selected and Idle Rated Curve Dynamics selected**–An incompatibility between the Speed setpoint and Speed Dynamics is detected. See the Setpoint and Dynamics tabs.

Configuration Warnings

1. **Multiple functions configured for Aux1 input**–This indication is provided to make sure the Aux1 input was configured as expected.
2. **Multiple functions configured for Aux2 input**–This indication is provided to make sure the Aux2 input was configured as expected.
3. **Multiple functions configured for Aux3 input**–This indication is provided to make sure the Aux3 input was configured as expected.
4. **Multiple functions configured for Aux4 input**–This indication is provided to make sure the Aux4 input was configured as expected.

Katolight Service - Master Repair Manual - Page 3076

Chapter 7.
Setup and Tuning

Introduction

The L-Series is configured using the Service Tool, refer to Chapter 5 for Service Tool installation and connection instructions. This chapter covers the process of tuning and servicing the control via the L-Series Service Tool. It is assumed that the control has already been installed on the engine.

An application requires the following setup steps. In many applications these steps have already been performed by the OEM.

- Configure the L-Series control (configuration is covered in Chapter 6).
- Tune the Speed control loop PID.

The following optional features are also available:

- Calibrate the Position Feedback range.
- Verify Position feedback calibration.
- Tune the Position control loop PID. For most applications, the default gains do not need to be changed.
- Modify speed and speed setpoint settings.

NOTE
Setup and tuning features can be individually password protected for security purposes. If security is applied, these features will not be accessible without the password.

NOTE
Many applications are delivered pre-configured, calibrated, and tuned. For most applications, the default gains do not need to be changed. Min Position and Fail Direction should be checked.

CAUTION
An unsafe condition could occur with improper use of these software tools. Only trained personnel should have access to these tools.

Tuning the Speed PID

The Service Tool can be used to tune the Speed PID or to just trend/monitor the speed PID output. The Speed PID Dynamics screen (Figure 7-1) is opened by selecting ‘Edit Speed Dynamics’ under the ‘Tools’ menu.

Pressing the Properties button pops open the Properties Window. From this window the user can adjust the trending window properties including the speed range, update rate and display range.

Katolight Service - Master Repair Manual - Page 3077

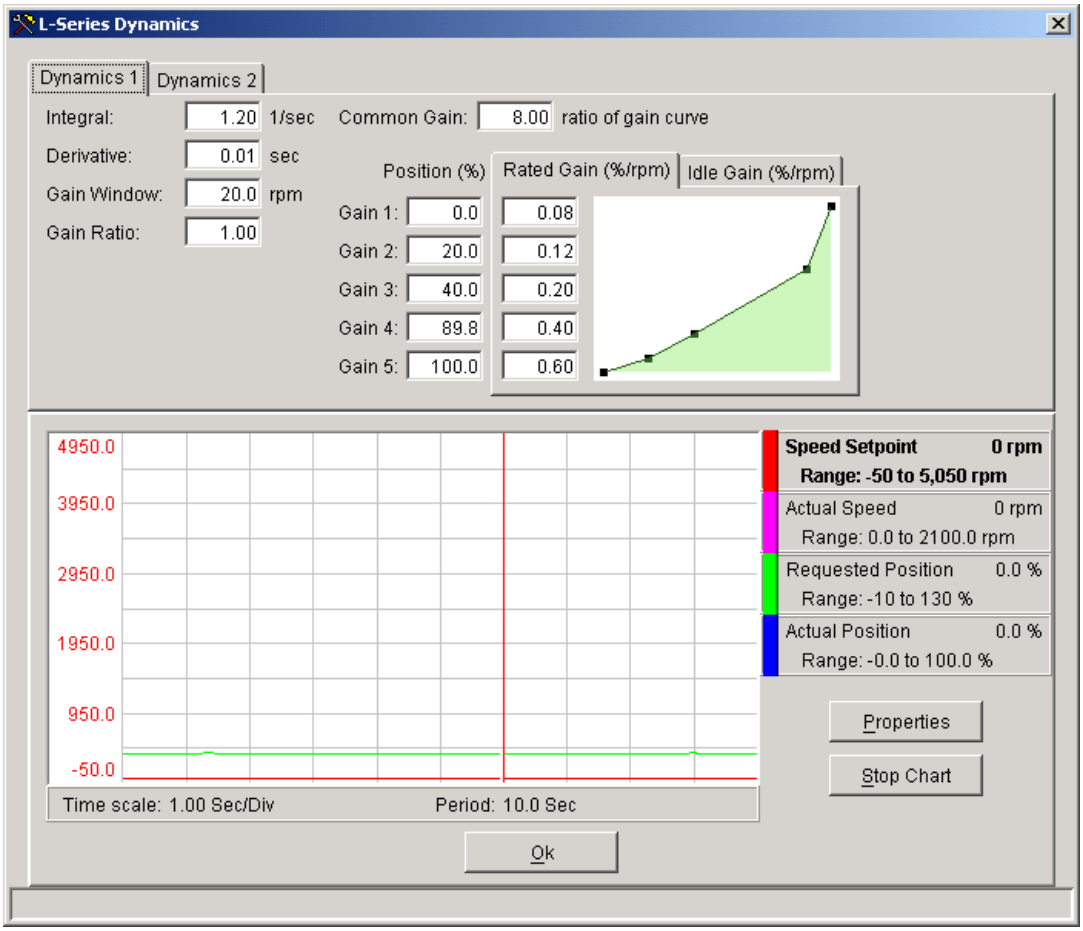

Figure 7-1. Service Tool–Speed Dynamics

Editing of Speed Settings

If configured, a window (Figure 7-2) is selectable under that Tools menu that allows editing of various speed settings. The settings in this window are a subset of the complete configuration and are not password protected. When this feature is used, the complete configuration is typically password protected.

The settings in this window can only be changed while connected to the control (on-line) and when the engine is stopped (speed is zero). This option is only available if the 'Allow unsecured tuning of speed input and speed settings' is selected on the Security tab in the Configuration Editor.

For details on the parameters that appear in this window, refer to Chapter 6.

Katolight Service - Master Repair Manual - Page 3078

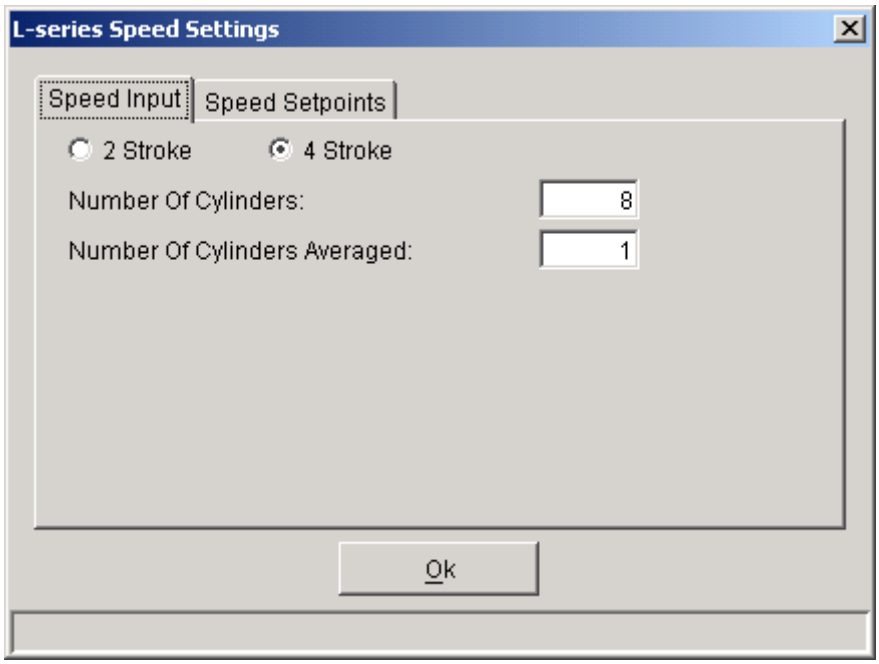

Figure 7-2. Speed Input Window

Tuning the Position PID

The Position PID tuning screen (Figure 7-3) is opened by selecting ‘Edit Position PID’ from the ‘Tools’ menu. The Service Tool can be used to tune the Position PID or to just trend/monitor the position PID output. In addition, the L-Series control can be put into a manual control mode from this screen by selecting the “Enable Manual Position Tuning’ checkbox. Once in manual mode, the position setpoint box is highlighted and the value displayed is actively positioning the output. Use this command to create step changes for the PID and monitor the response using the displayed trend.

Pressing the Properties button pops open the Properties Window (Figure 7-4). From this window the user can adjust the trending window properties including the update rate and display range.

Katolight Service - Master Repair Manual - Page 3079

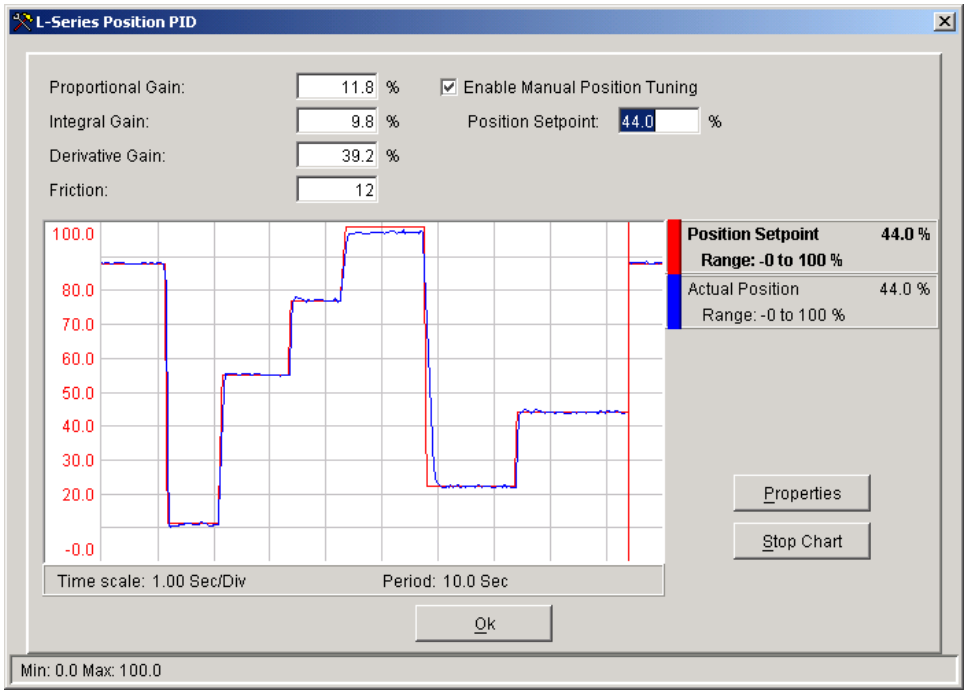

Figure 7-3. Service Tool–PID Tuning Window

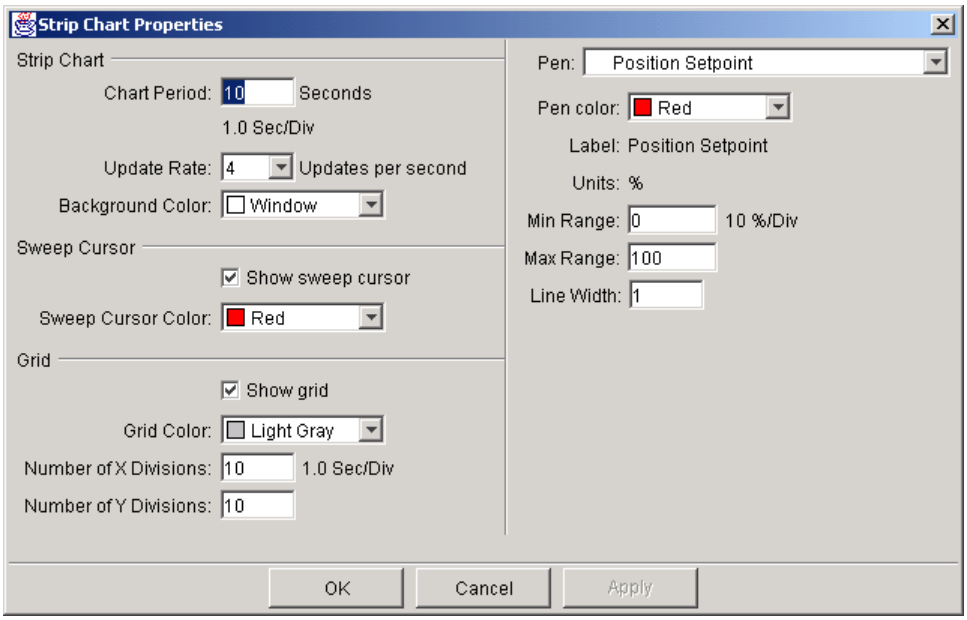

Figure 7-4. Service Tool–PID Tuning Properties Window

Position Calibration and Verification

Position calibration is available to map the position command input to the actual rotational travel of the unit. It is only used when the full travel of the actuator is constrained or limited such that 0 to 60 degrees of travel is not used. For example, an application-specific position calibration could map 0–100% position command to 10–40 degrees actual rotation.

Katolight Service - Master Repair Manual - Page 3080

There are two methods available to perform a position calibration: Automatic or Manual. If the application has hard stops that correspond to the actual min/max travel, then either Auto or Manual methods can be used—although auto is easier. If hard stops are not available, then the auto method will give invalid results and the manual method must be followed.

The Service Tool can be used to calibrate the control to end user stops (physical or soft) or to verify the position calibration. To get to the Position Calibration screens select the desired function from Position Calibration under the Tools menu selection.

NOTE
Position Calibration is only used when the full travel of the actuator is constrained or limited such that 0 to 60 degrees of travel is not used.

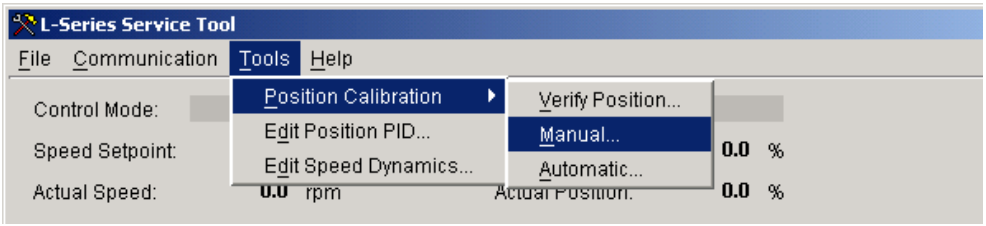

Figure 7-5. Service Tool–Manual Position Calibration selection

Calibration Sequence Overview

The following outlines the basic steps required to execute the position calibration.

Automatic Mode
1. Select Automatic Position Calibration Mode.
2. Select CW or CCW Direction.
3. L-Series automatically rotates in both CW and CCW directions until the stops are detected. The values are then captured and stored.
4. When completed, cycle the power on the L-Series.
5. It is recommended that a Position Verification be performed to confirm the calibration is correct. See Position Verification below.

Manual
1. Determine the rotational travel limits. This can be done by positioning the unit to the minimum and maximum positions and recording the position settings.
2. Select Manual Position Calibration Mode.
3. Select Direction.
4. Enter the pre-determined rotational travel limits values.
5. When completed, cycle the power on the L-Series.
6. It is recommended that a Position Verification be performed to confirm the calibration is correct. See Position Verification below.

Katolight Service - Master Repair Manual - Page 3081

Position Verification

The Position Verification screen (Figure 7-6) is opened by selecting 'Verify Position' from the 'Position Calibration' drop-down under the 'Tools' menu. When the Verify Position screen is entered, the control is put into position control and the position is set to the position the control was at when the screen was entered. The screen displays the "User" Requested Position, Actual Position, Minimum Position, and Maximum Position. These User Positions are calculated from the user-calibrated stops.

The Full Travel Actual Position is the full stroke factory position without user stops after software linearization. The Full Travel Sensor Position is the full stroke factory position without user stops before software linearization. The Full Travel Sensor Position will match the TPS Output Signal.

The Verify Position screen can be used to check the calibration or to get the minimum and maximum position values for the manual calibration. If the Enable Requested Position Tuning box is checked the valve can be positioned anywhere from 0 to 100% of the user minimum and maximum stops by entering a value into the Requested Position. If the Enable Requested Position Tuning box is unchecked the valve will go limp and can be physical positioned by hand.

NOTE
If the full factory position calibration range is not being used (the Manual or Automatic Calibration has been performed) and the minimum position direction is changed, the calibration must be run again for the Verify Position mode to work correctly.

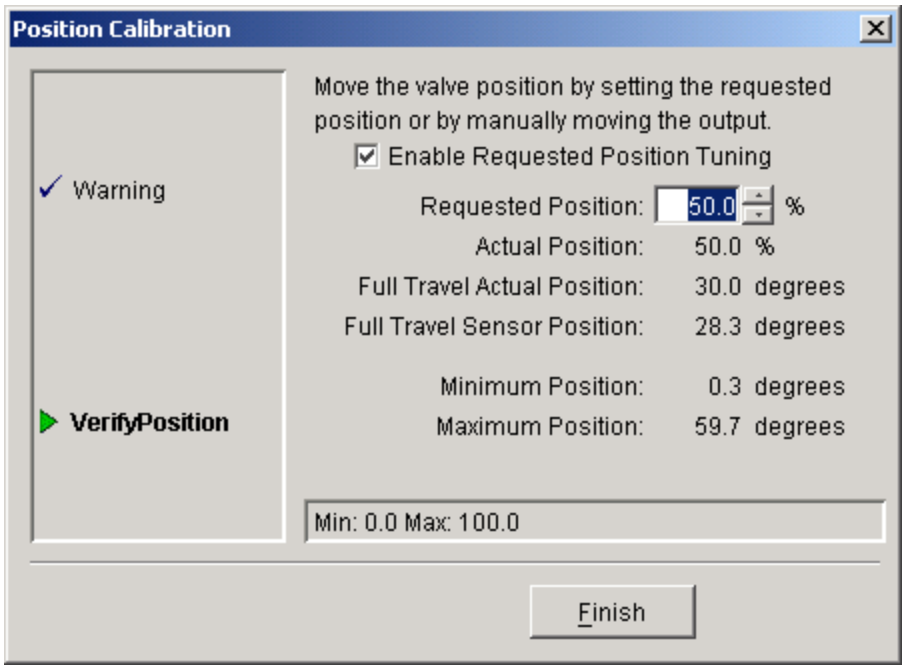

Figure 7-6. Service Tool—Verify Position Calibration

Katolight Service - Master Repair Manual - Page 3082

Manual

The Manual position calibration screen (figure 7-7) is opened by selecting 'Manual' from the 'Position Calibration' drop-down under the 'Tools' menu. The manual calibration mode is used to set the minimum position and fail direction and to calibrate the valve to user soft stops (inside of any physical stops). The first screen to appear when entering the manual mode is used to set the minimum position and fail direction. This setting must be correct before manually calibrating the valve.

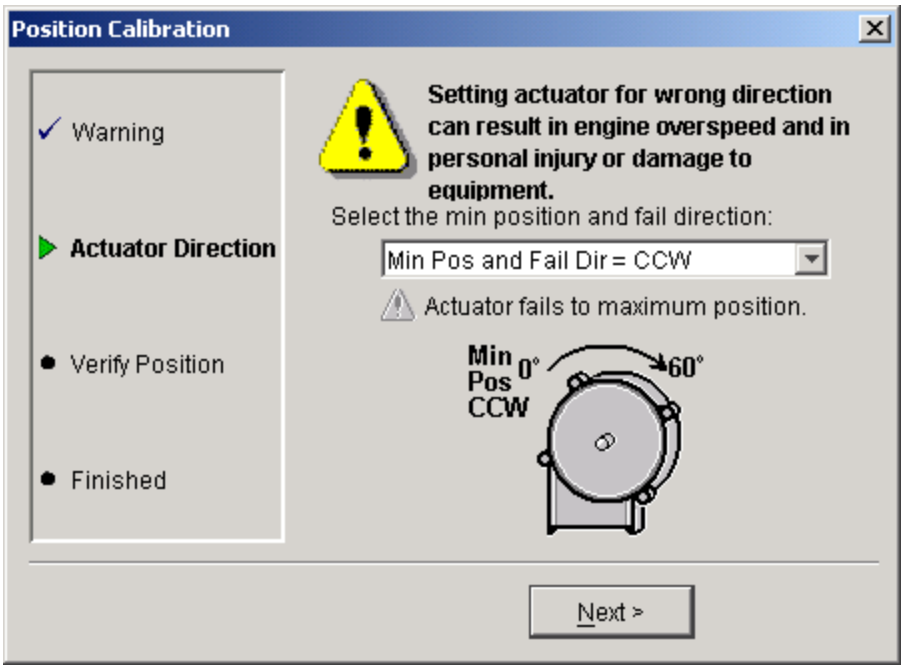

Figure 7-7. Service Tool—Manual Position Calibration

The next screen is used to set the minimum and maximum positions for the user soft stops. To find the minimum and maximum soft stops use the verify position mode described above to position the valve and use the Full Travel Actual Position reading for minimum and maximum position values.

NOTE
After leaving this mode, power must be cycled for the new settings to take effect.

Katolight Service - Master Repair Manual - Page 3083

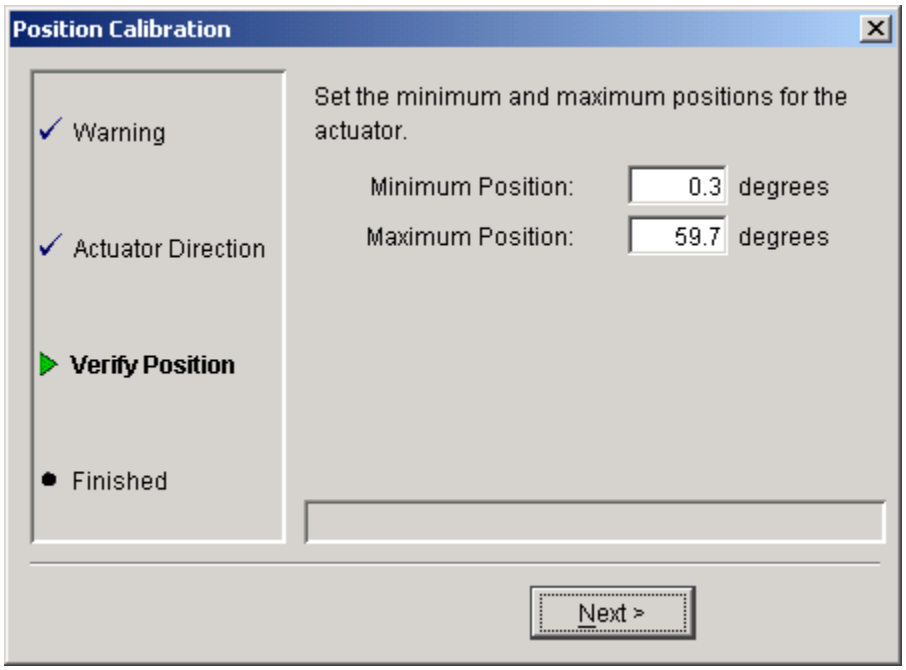

Figure 7-8. Service Tool—Manual Position Calibration Settings

Automatic

The Automatic position calibration screen (Figure 7-9) is opened by selecting 'Automatic' from the 'Position Calibration' drop-down under the 'Tools' menu. The automatic calibration mode is used to set the minimum position and fail direction and to calibrate the valve to user physical stops (mechanical hard stops). Like the manual mode, the first screen to appear is used to set the minimum position and fail direction. This setting must be correct before automatic calibration is performed.

After setting minimum position and fail direction the screen below will appear. The control is now moving first to the CCW stop and then to the CW stop to get the physical minimum and maximum positions.

NOTE
After leaving this mode, power must be cycled for the new settings to take effect.

Katolight Service - Master Repair Manual - Page 3084

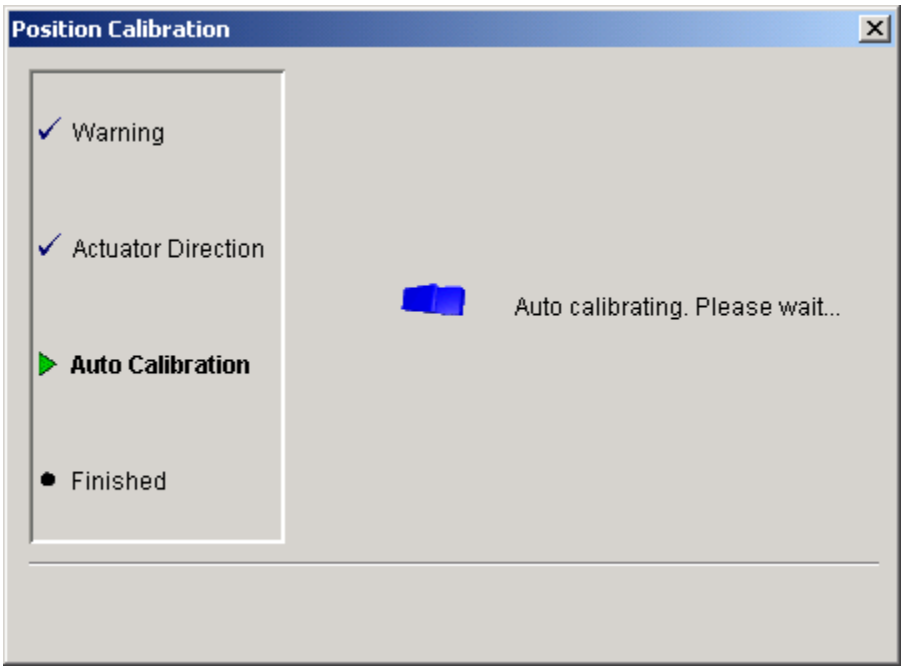

Figure 7-9. Service Tool–Auto Position Calibration

Katolight Service - Master Repair Manual - Page 3085

Chapter 8. Troubleshooting

Introduction

This chapter presents several broad categories of application failures typically experienced in the field, possible causes, and some tests used to verify the causes. Because the exact failure experienced in the field is the product of the mechanical/electrical failure combined with the configuration file resident in the control, it is left as the OEM's responsibility to create a more detailed troubleshooting chart for the end user. Ideally, this end-user troubleshooting chart will contain information about mechanical, electrical, engine, and load failures in addition to the possible governor failures. For more detailed information about governor system failure modes and effects, contact Woodward for a copy of the system DFMEA.

The troubleshooting scenarios listed below assume that the end user has a digital multimeter at his disposal for testing voltages and checking continuity, and assume that the application has been engineered and tested thoroughly.

There are four parts to the troubleshooting section:

- General Troubleshooting
- Engine/Generator Troubleshooting
- Troubleshooting Alarm/Shutdown Diagnostic Flags
- Input/Output (I/O)Troubleshooting



WARNINGS

The actions described in this troubleshooting section are not always appropriate in every situation. Always make sure that any action taken will not result in loss of equipment, personal injury, or loss of life.

The engine, turbine, or other type of prime mover should be equipped with an overspeed shutdown device to protect against runaway or damage to the prime mover with possible personal injury, loss of life, or property damage.

The overspeed shutdown device must be totally independent of the prime mover control system. An overtemperature or overpressure shutdown device may also be needed for safety, as appropriate.

The L-Series is used on prime movers that typically have a high noise level. Always use appropriate hearing protection while working around the L-Series.

The L-Series wiring must be in accordance with North American Class I, Division 2 or Zone 2 wiring methods as applicable, and in accordance with the authority having jurisdiction.

Katolight Service - Master Repair Manual - Page 3086

General System Troubleshooting Guide

The following is a general troubleshooting guide for areas to check which may present potential difficulties. By making these checks appropriate to your engine/turbine before contacting Woodward for technical assistance, your system problems can be more quickly and accurately assessed.

- Is the wiring correct?
- Is the direction of the stroke correct?
- Is the direction of the failsafe shutdown correct?
- Does the valve move through its proper stroke smoothly?
- Does the valve travel its full stroke?
- Can mid-stroke be obtained and held?
- Does the valve fully seat (close)?
- Does the valve fully open?

Engine/Generator Troubleshooting

Problem	Possible Cause	Suggested Test/Correction
Engine does not start	Stuck throttle/frozen shaft	Move throttle by hand. Assess smoothness, friction, and return spring force.
	Power not applied to control	Disconnect starter motor solenoid. Disconnect harness from governor. Test for +12/24 V between +12/24 V pin and ground pin.
	Run Enable not closed	Verify status of input. Measure input. Verify input and configuration using Service Tool.
	Incorrect configuration in control.	Using Service Tool, read configuration from control and evaluate parameters for correction.
	Fault detected in control.	Using Service Tool, read faults from control. Verify/correct any shutdown conditions.
	MPU gap too large	Remove and reinstall MPU per OEM's instructions. Rotate engine manually to check for interference.
	MPU signal connection open	Disconnect harness from governor. Test for at least 1 Vrms between MPU+ pin and MPU– pin while the flywheel is spinning.
	Ignition signal connection open	Disconnect harness from governor. Test for bouncing voltage between IGN pin and ground pin while the engine is starting/firing.

Katolight Service - Master Repair Manual - Page 3087

Problem	Possible Cause	Suggested Test/Correction
The actuator is not opening the fuel control valve during engine cranking.	The control is configured for the wrong opening direction.	Check CW/CCW min fuel direction configuration.
	The Run Enable input is not enabled. See overview screen on service tool.	Make sure the run enable input is made active. Check wiring.
	The control has detected a shutdown situation and has not been reset.	Reset the control by cycling power to the control, hitting reset on the Service Tool, or toggling the run enable switch.
	There is no power supplied to the control.	Check fuse, wiring, and battery voltage.
	The control does not read any speed. Speed sensor defect, wiring defect, or incorrect speed sensor installation.	Fix or replace speed sensor, fix wiring or install speed sensor correctly according to the speed sensor manual.
	The control reads an actual engine speed below the start speed threshold.	Start speed is set too high. Lower start speed threshold.
	The Start fuel 1 and or 2 setup is incorrectly set.	Set up the Start Fuel to the correct value for this engine.
The engine overspeeds on start-up.	An overshoot in speed is caused by an excessive speed setpoint acceleration.	Acceleration ramp rate is set too high.
	The overspeed trip level is configured incorrectly.	Verify the overspeed trip setting configuration.
	Incorrect speed input configuration.	Verify the input speed configuration settings (number of teeth). Check the sensed speed compared to an external engine speed indicator.
	Gains not set properly for transients	If overspeed occurs on transient, raise common gain to reduce overshoot.
	Start Fuel Limit not set properly	Lower rpm run threshold or lower start fuel position.
	Speed sensing error	Follow instructions for MPU or ignition signal intermittent under Speed Sensor Error.
Engine starts, but shuts down on error	Speed sensing error	Follow instructions for MPU or ignition signal intermittent under Speed Sensor Error.
	Error detected by control.	Verify the exact cause of the error using the Service Tool.
Incorrect mode of operation (speed, speed bias function, dynamics)	AUX inputs shorted or open	Disconnect starter motor solenoid. Disconnect harness from governor. Check for correct voltage level between AUX pin(s) under question and ground pin for known application modes.

Katolight Service - Master Repair Manual - Page 3088

Problem	Possible Cause	Suggested Test/Correction
The engine will not go to rated speed.	The Idle Rated input wiring is defective. See overview screen for input position.	Check wiring.
	The high, low, and active open or closed selection for the Idle Rated input is selected incorrectly.	Set up the correct input modes.
	The Control is not configured for Idle Rated operation.	Configure the Control for Idle Rated operation if that is the desired operation mode.
The engine will not go to idle speed.	The Idle Rated input wiring is defective. See overview screen for input position.	Check wiring.
	The high, low, and active open or closed selection for the Idle Rated input is selected incorrectly.	Set up the correct input modes.
	The Control is not configured for Idle Rated operation.	Configure the Control for Idle Rated operation if that is the correct operation mode.
The engine will not raise the speed setpoint.	The Raise input wiring is defective. See overview screen for input position.	Check wiring.
	The high, low, and active open or closed selection for the Raise input is selected incorrectly.	Set up the correct input modes.
	The Control is not configured for Raise Lower operation.	Configure the Control for Raise Lower operation or Raise Lower and Analog if that is the correct operation mode.
	The Lower input is also active and the Analog Raise Lower is configured.	Set up the lower input to the correct state. The engine will not lower the speed setpoint.
	The lower is active and only Raise Lower is selected. The Control will lower the speed if Raise and Lower are selected at the same time.	Set up the lower input to the correct state. The engine will not lower the speed setpoint.
The engine will not lower the speed setpoint.	The Lower input wiring is defective. See overview screen for input position.	Check wiring.
	The high, low, and active open or closed selection for the Raise input is selected incorrectly.	Set up the correct input modes.
	The Control is not configured for Raise lower operation.	Configure the Control for Raise Lower operation or raise lower and analog if that is the desired operational mode.
	The Raise input is also active and the analog Raise Lower is configured. The control is in analog mode.	Set the lower input to the correct state. The engine will not lower the speed setpoint.

Katolight Service - Master Repair Manual - Page 3089

Problem	Possible Cause	Suggested Test/Correction
Engine unstable	Improperly tuned speed or position PID dynamics.	Using Service Tool, tune the position dynamics. In most cases the default dynamics are appropriate. Using Service Tool, tune the speed dynamics.
	Intermittent or incorrect speed signal.	Verify speed signal shielding recommendations (chapter 3) have been followed. Verify speed input is wired correctly. Ignition and MPU cannot be wired simultaneously.
	Dual dynamics discrete input shorted or open	Disconnect starter motor solenoid. Activate application. Check for correct voltage level between dual dynamics AUX pin and ground pin for known application mode.
Poor frequency control	Improperly tuned dynamics.	Using Service Tool, tune the speed control dynamics.
	Improperly tuned dynamics.	Using Service Tool, tune the position dynamics. In most cases the default dynamics are appropriate.
	Friction improperly set.	Using Service Tool, adjust the Friction setting.
Unable to develop full power	Non-indexed linkage slipped on shaft. Fault detected in control. Shorted/bad MAP sensor signal	Manually verify full travel of throttle plate. Using Service Tool, view status of fault codes. Take appropriate action for active faults. If using MAP fuel limiting, disconnect starter motor solenoid. Verify the input voltage matches expected voltage for known atmospheric conditions.
Discrete output not working	Wiring fault.	Check the wiring leading to pin 9 for open connections or misconnections. Verify that pin 9 is not connected directly to input power or ground.
	Configuration.	Using the Service Tool, verify that the faults and shutdowns are selected properly and that the output is configured for expected operation (either normally “on” or normally “off”).
Service Tool not communicating–‘Not Connected’ status indicated	Wiring fault. The Service tool is disconnected. The wrong communication port has been selected.	Check AUX3 and AUX4 for loose or misconnected connections. Verify harness setup and connections (see Chapter 4). Check that Service Tool is running. Verify the port setting is correct. Check fuse, wiring, and battery voltage. Connect the service tool by using the connect menu.

Katolight Service - Master Repair Manual - Page 3090

Problem	Possible Cause	Suggested Test/Correction
Service Tool not communicating–'Error message displayed on PC when trying to connect	Old version of Service Tool or file corruption or bad install.	Re-install Service Tool, get the latest version from the Woodward web site (www.woodward.com/software)
Service Tool will not accept password	Cap Lock is on.	Password is case sensitive, make sure you enter the password correctly using upper and lower case. If password is lost contact the OEM for retrieval.

Troubleshooting Diagnostic Fault Flags

Error Flag	Description	Possible Source	Possible Action
Supply Voltage Failure	The power supply voltage is higher than the diagnostic limits. The Power supply voltage is lower than the diagnostic limits.	Bad or damaged battery. Defective battery charging system. Incorrect setting of power supply voltage level. Power supply wiring to long or to thin. Control will flag low voltage during higher power uses.	Replace battery. Fix battery charging system. Set correct voltage levels on power supply. Make sure wiring is of the correct thickness and length according to manual.
Temperature Sense Failed	This error is set if the temperature inside the control is higher or lower than allowed by the specifications.	Control has been placed in an environment that is too hot or too cold. The internal temperature sensor is defective. This can be determined by checking the temperature of the unit and comparing this to the service tool value of the electronics temperature.	Lower temperature by adding cooling, heat shielding, moving the unit, etc. Increase temperature by adding heat. Return unit to Woodward for repair.
Governor High Speed	This error is set if the actual speed if higher than the speed setpoint plus a configured limit for longer than the configured time.	The actuator is not capable of closing the fuel control valve (max torque). The fuel control valve is jammed or stuck. The actuator is setup incorrectly. Zero percent position will not completely close the fuel valve. The linkage is moved or disconnected. The engine is not responding correctly. The detection margins are set too low. The detection time is set up too short. A normal load transient will trigger this error.	Check the torque needed to close the fuel valve against the available torque. Fix or replace valve. Run the position setup wizard to set up the actuator correctly. 0% will close fuel valve. Fix or replace linkage. Check with the engine troubleshooting manual. Set the margins to an acceptable level. Set the detection time to an acceptable level.

Katolight Service - Master Repair Manual - Page 3091

Error Flag	Description	Possible Source	Possible Action
Governor Low Speed	This error is set if the actual speed if lower than the speed setpoint minus a configured limit for longer than the configured time.	The actuator is not capable of opening the fuel control valve (max torque).	Check the torque needed to open the fuel valve against the available torque.
		The fuel control valve is jammed or stuck.	Fix or replace valve.
		The actuator is set up incorrectly. 100% position will not completely open the fuel valve.	Run the position setup wizard to set up the actuator correctly. 100% will open fuel valve.
		The linkage is moved or disconnected.	Fix or replace linkage.
		The engine is not responding correctly.	Review the engine troubleshooting manual.
		The fuel supply to the engine is restricted.	Open restriction in fuel supply, check filters.
		The load on the engine is too high.	Reduce load on the engine to an acceptable limit for this engine.
		The detection margins are set too low.	Set the margins to an acceptable level.
		The detection time is set up too short. A normal load transient will trigger this error.	Set the detection time to an acceptable level.
Max Starting Time	The max staring time error will be set if the engine is not above run speed within a configured amount of time.	Start fuel is set to low. Engine will not reach run speed.	Set start fuel limit to a level where the engine will reach run speed or lower run speed if a possible.
		Low temperature of engine will not start engine at start fuel selected.	Select two start fuels with ramp to ramp to more or less fuel during the engine start.
		Engine is defective and will not start.	Check with the engine troubleshooting manual.

Katolight Service - Master Repair Manual - Page 3092

Error Flag	Description	Possible Source	Possible Action
Overspeed	This diagnostic flag will be set if the actual engine speed is higher than the overspeed threshold.	The overspeed parameter has not been set. Factory default is zero rpm.	Set the correct overspeed value.
		Engine dynamics are set up too slow for a sudden load reject.	Increase the gains, decrease gain window, or increase gain ratio.
		The actuator is not capable of closing the fuel control valve (max torque).	Check the torque needed to close the fuel valve against the available torque.
		The fuel control valve is jammed or stuck.	Fix or replace valve.
		The actuator is set up incorrectly. Zero percent position will not completely close the fuel valve.	Run the position setup wizard to set up the actuator correctly. 0% will close fuel valve.
		The linkage is moved or disconnected.	Fix or replace linkage.
		The engine is not responding correctly.	Check with the engine troubleshooting manual.
Speed Sensor Failed	This diagnostic flag will be set if the speed input pulses have not been detected.	Damaged, loss of speed or wiring.	Fix wiring or replace.
			Verify speed signal shielding recommendations (chapter 3) have been followed.
			Verify speed input is wired correctly. Ignition and MPU cannot be wired simultaneously.
		Damaged connector.	Fix connector or replace.
		Incorrect installation of speed sensor.	Correct the speed sensor installation. See speed sensor installation manual.
		Incorrect configuration of speed sensor.	Verify configuration settings.
		Missing pulses on speed gear.	Make sure speed gear wheel is not missing any teeth.
		MPU gap too large	Remove and reinstall MPU per OEM's instructions. Rotate engine manually to check for interference.
		MPU signal connection open	Disconnect harness from governor. Test for at least 1 Vrms between MPU+ pin and MPU– pin while the flywheel is spinning.
		Ignition signal connection open	Disconnect harness from governor. Test for bouncing voltage between IGN pin and ground pin while the engine is starting/firing.

Katolight Service - Master Repair Manual - Page 3093

Error Flag	Description	Possible Source	Possible Action
Position Error	Indicates demanded position and the actual position are outside the configured limits.	Incorrect position control dynamics or friction setting. Binding or excessive friction in the actuator linkage, or stops are set inside the desired range of travel.	Check/tune position dynamics using the Service Tool. Perform a position calibration. Check all mechanical linkages and stops. Verify Configuration errors settings.
Position Sensor Failure	If the internal position sensor is outside the diagnostic limits.	Internal failure of position sensor.	Return unit to Woodward.
Internal Shutdown	All internal shutdowns will set this flag.	The Control is defective.	Return unit to Woodward.
EEPROM Failure	The software can't write to the EEPROM. The software can't read from the EEPROM.	The Control is defective.	Return unit to Woodward.
Brown Out Reset	The power up reset flag will be set every time power to the Control has been lost and is restored.	Normal power up of the Control. Loss of power or intermittent power supply wiring. Power supply wiring to long or to thin. ISC will reset during transient power uses.	No action needed. Possibly reset control. Check wiring for bad or lost connection. Make sure wiring is of the correct thickness and length according to manual.
Watchdog Reset	The watchdog has reset the Control.	After software update, the software watchdog will reset the Control. The software is disrupted by EMI or an internal component failure.	This is a normal situation. Reset the error code and reset the stored errors. This is an abnormal situation. Return the unit to Woodward.
Overtemperature	High internal temperature.	Detection of high of temperature.	Check ambient temperature around Control. Verify temperature reading using service tool. If the temperatures seem normal, could indicate a problem with the temperature sensor.
Relay Fail Short	Control detected a fault in the discrete out wiring.	Incorrect or intermittent wiring problem.	Check wiring for bad or lost connection.
Run Enable Shutdown	Control detected that the Run Enable discrete in is not active.	Incorrect or intermittent wiring problem. Incorrect configuration.	Check wiring for bad or lost connection. Verify configuration. Check Run Enable setting, verify proper Active Open or Active Closed setting.

Katolight Service - Master Repair Manual - Page 3094

Electrical Troubleshooting Guide

MPU Speed Input

If the speed input is not functioning properly, verify the following:

- Measure the input voltage and frequency.
- Check the values seen by the L-Series driver using the Service Tool and verify that is matches the input signal.
- Check the wiring. Look for loose connections and disconnected / misconnected cables/connections.
- Check the software configuration to ensure that the input is configured properly.

Ignition Speed Input

If the speed input is not functioning properly, verify the following:

- Measure the input voltage and frequency.
- Check the values seen by the L-Series driver using the Service Tool and verify that is matches the input signal.
- Check the wiring. Look for loose connections and disconnected / misconnected cables/connections.
- Check the software configuration to ensure that the input is configured properly.

Analog Input

If an Analog Input is not functioning properly, verify the following:

- Measure the input voltage.
- Verify the input is properly configured.
- Check the values seen by the L-Series driver using the Service Tool and verify that it matches the input signal.
- Verify that there are no or minimal ac components to the Analog Input signal. AC components can be caused by improper shielding.
- Check the wiring. If the inputs are reading 0 or the engineering units correspond to 0 V, look for loose connections and disconnected / misconnected cables/connections.
- Check the software configuration to ensure that the input is configured properly as the Demand Source.

Discrete Input

If a discrete input is not functioning properly, verify the following:

- Measure the input voltage on the terminal block. It should be in the range of 10–28 Vdc.
- Check the status of the input from the Overview screen of the Service Tool.
- Check the wiring, looking for loose connections or misconnected cables.
- Verify the input is properly configured.

Alarm or Shutdown Conditions

If the L-Series control has any alarm or shutdown conditions, refer to Chapter 4 for details on the exact cause of the condition. The Service Tool must be used to determine the cause of any shutdown or alarm condition.

Katolight Service - Master Repair Manual - Page 3095

Discrete Output

If the discrete output is not functioning properly, verify the following:

- Measure the output voltage on the terminal block. It should be in the range of 10–28 Vdc when the output is off/false. The voltage will be in this range only if all shutdowns are false, assuming it is configured as Off for Fault. This can be verified through the Service Tool.
- Check the wiring, looking for loose connections or disconnected / misconnected cables.
- Verify the configuration of the output.

Service Tool

If the service tool is not functioning properly, review the installation information in Chapter 5. Verify the following:

- Check the wiring, looking for loose connections or disconnected / misconnected cables.
- Check that Service Tool is running. Verify the Port setting is correct.
- Follow on-screen error messages. Re-install software as needed. The latest version of software is available for download from the Woodward web site (www.woodward.com/software).

Katolight Service - Master Repair Manual - Page 3096

Chapter 8.
Service Options

Product Service Options

The following factory options are available for servicing Woodward equipment, based on the standard Woodward Product and Service Warranty (5-01-1205) that is in effect at the time the product is purchased from Woodward or the service is performed:

- Replacement/Exchange (24-hour service)
- Flat Rate Repair
- Flat Rate Remanufacture

If you are experiencing problems with installation or unsatisfactory performance of an installed system, the following options are available:

- Consult the troubleshooting guide in the manual.
- Contact Woodward technical assistance (see “How to Contact Woodward” later in this chapter) and discuss your problem. In most cases, your problem can be resolved over the phone. If not, you can select which course of action you wish to pursue based on the available services listed in this section.

Replacement/Exchange

Replacement/Exchange is a premium program designed for the user who is in need of immediate service. It allows you to request and receive a like-new replacement unit in minimum time (usually within 24 hours of the request), providing a suitable unit is available at the time of the request, thereby minimizing costly downtime. This is also a flat rate structured program and includes the full standard Woodward product warranty (Woodward Product and Service Warranty 5-01-1205).

This option allows you to call in the event of an unexpected outage, or in advance of a scheduled outage, to request a replacement control unit. If the unit is available at the time of the call, it can usually be shipped out within 24 hours. You replace your field control unit with the like-new replacement and return the field unit to the Woodward facility as explained below (see “Returning Equipment for Repair” later in this chapter).

Charges for the Replacement/Exchange service are based on a flat rate plus shipping expenses. You are invoiced the flat rate replacement/exchange charge plus a core charge at the time the replacement unit is shipped. If the core (field unit) is returned to Woodward within 60 days, Woodward will issue a credit for the core charge. [The core charge is the average difference between the flat rate replacement/exchange charge and the current list price of a new unit.]

Return Shipment Authorization Label. To ensure prompt receipt of the core, and avoid additional charges, the package must be properly marked. A return authorization label is included with every Replacement/Exchange unit that leaves Woodward. The core should be repackaged and the return authorization label affixed to the outside of the package. Without the authorization label, receipt of the returned core could be delayed and cause additional charges to be applied.

Katolight Service - Master Repair Manual - Page 3097

Flat Rate Repair

Flat Rate Repair is available for the majority of standard products in the field. This program offers you repair service for your products with the advantage of knowing in advance what the cost will be. All repair work carries the standard Woodward service warranty (Woodward Product and Service Warranty 5-01-1205) on replaced parts and labor.

Flat Rate Remanufacture

Flat Rate Remanufacture is very similar to the Flat Rate Repair option with the exception that the unit will be returned to you in “like-new” condition and carry with it the full standard Woodward product warranty (Woodward Product and Service Warranty 5-01-1205). This option is applicable to mechanical products only.

Returning Equipment for Repair

If a control (or any part of an electronic control) is to be returned to Woodward for repair, please contact Woodward in advance to obtain a Return Authorization Number. When shipping the item(s), attach a tag with the following information:

- name and location where the control is installed;
- name and phone number of contact person;
- complete Woodward part number(s) and serial number(s);
- description of the problem;
- instructions describing the desired type of repair.



CAUTION

To prevent damage to electronic components caused by improper handling, read and observe the precautions in Woodward manual 82715, *Guide for Handling and Protection of Electronic Controls, Printed Circuit Boards, and Modules*.

Packing a Control

Use the following materials when returning a complete control:

- protective caps on any connectors;
- antistatic protective bags on all electronic modules;
- packing materials that will not damage the surface of the unit;
- at least 100 mm (4 inches) of tightly packed, industry-approved packing material;
- a packing carton with double walls;
- a strong tape around the outside of the carton for increased strength.

Katolight Service - Master Repair Manual - Page 3098

Return Authorization Number

When returning equipment to Woodward, please telephone and ask for the Customer Service Department [1 (800) 523-2831 in North America or +1 (970) 482-5811]. They will help expedite the processing of your order through our distributors or local service facility. To expedite the repair process, contact Woodward in advance to obtain a Return Authorization Number, and arrange for issue of a purchase order for the item(s) to be repaired. No work can be started until a purchase order is received.

NOTE
We highly recommend that you make arrangement in advance for return shipments. Contact a Woodward customer service representative at 1 (800) 523-2831 in North America or +1 (970) 482-5811 for instructions and for a Return Authorization Number.

Replacement Parts

When ordering replacement parts for controls, include the following information:
- the part number(s) (XXXX-XXXX) that is on the enclosure nameplate;
- the unit serial number, which is also on the nameplate.

How to Contact Woodward

In North America use the following address when shipping or corresponding:

Woodward Governor Company
PO Box 1519
1000 East Drake Rd
Fort Collins CO 80522-1519, USA

Telephone—+1 (970) 482-5811 (24 hours a day)
Toll-free Phone (in North America)—1 (800) 523-2831
Fax—+1 (970) 498-3058

For assistance outside North America, call one of the following international Woodward facilities to obtain the address and phone number of the facility nearest your location where you will be able to get information and service.

Facility	Phone Number
Brazil	+55 (19) 3708 4800
India	+91 (129) 230 7111
Japan	+81 (476) 93-4661
The Netherlands	+31 (23) 5661111

You can also contact the Woodward Customer Service Department or consult our worldwide directory on Woodward's website (**www.woodward.com**) for the name of your nearest Woodward distributor or service facility.

Katolight Service - Master Repair Manual - Page 3099

Engineering Services

Woodward Industrial Controls Engineering Services offers the following after-sales support for Woodward products. For these services, you can contact us by telephone, by email, or through the Woodward website.

- Technical Support
- Product Training
- Field Service

Contact information:

Telephone—+1 (970) 482-5811
Toll-free Phone (in North America)—1 (800) 523-2831
Email—icinfo@woodward.com
Website—**www.woodward.com**

Technical Support is available through our many worldwide locations or our authorized distributors, depending upon the product. This service can assist you with technical questions or problem solving during normal business hours. Emergency assistance is also available during non-business hours by phoning our toll-free number and stating the urgency of your problem. For technical support, please contact us via telephone, email us, or use our website and reference ***Customer Services*** and then ***Technical Support***.

Product Training is available at many of our worldwide locations (standard classes). We also offer customized classes, which can be tailored to your needs and can be held at one of our locations or at your site. This training, conducted by experienced personnel, will assure that you will be able to maintain system reliability and availability. For information concerning training, please contact us via telephone, email us, or use our website and reference ***Customer Services*** and then ***Product Training***.

Field Service engineering on-site support is available, depending on the product and location, from one of our many worldwide locations or from one of our authorized distributors. The field engineers are experienced both on Woodward products as well as on much of the non-Woodward equipment with which our products interface. For field service engineering assistance, please contact us via telephone, email us, or use our website and reference ***Customer Services*** and then ***Technical Support***.

Katolight Service - Master Repair Manual - Page 3100

Technical Assistance

If you need to telephone for technical assistance, you will need to provide the following information. Please write it down here before phoning:

General

Your Name_____
Site Location_____
Phone Number_____
Fax Number_____

Prime Mover Information

Engine/Turbine Model Number_____
Manufacturer_____
Number of Cylinders (if applicable)_____
Type of Fuel (gas, gaseous, steam, etc)_____
Rating_____
Application_____

Control/Governor Information

Please list all Woodward governors, actuators, and electronic controls in your system:

Woodward Part Number and Revision Letter _____
Control Description or Governor Type _____
Serial Number _____

Woodward Part Number and Revision Letter _____
Control Description or Governor Type _____
Serial Number _____

Woodward Part Number and Revision Letter _____
Control Description or Governor Type _____
Serial Number _____

If you have an electronic or programmable control, please have the adjustment setting positions or the menu settings written down and with you at the time of the call.

Appendix A. Acronyms/Abbreviations

AUX	auxiliary
CRC	cyclic redundancy check
DFMEA	design failure modes and effects analysis
EEPROM	electrically-erasable programmable read-only memory
EMC	electro-magnetic compatibility
GUI	graphic user interface
I/O	inputs/outputs
IGN	ignition speed signal
Isoch	isochronous
ITB	integrated throttle body
L-Series	Woodward electronic engine governor that contains both a rotary actuator and a control circuit board
MPU	magnetic pick up
OEM	original equipment manufacturer
PWM	pulse-width modulated
rpm	revolutions per minute
RS-232	a communications standard
TPS	throttle position sensor

Katolight Service - Master Repair Manual - Page 3102

Appendix B.
L-Series Control Specifications

	Specifications
Power Supply	12/24 V systems (10–32 Vdc) reverse polarity protection, 2.5 A max
Power Consumption	32 W maximum
Torque	Nominal: 0.34 N·m (0.25 lb-ft) Minimum Transient (up to 105 °C): 0.28 N·m (0.21 lb-ft) Minimum Continuous (up to 105 °C): 0.20 N·m (0.15 lb-ft)
Mass/Weight	425 g (15 oz)
Power-Up to Operation Time	<250 ms
	Performance
Speed Control Accuracy	MPU Input: ±0.25% of rated speed on gasoline, diesel, or gaseous engines IGN Input: ±0.5% of rated speed on gasoline or gaseous engines
Transient Behavior	Gasoline: <10% at 100% load shed, <-10% at 100% load pick-up Gaseous: <10% at 100% load shed, <-10% at 100% load pick-up Diesel: <10% at 100% load shed, <-7% at 100% load pick-up ***NOTE**: The specifications above are for naturally aspirated engines. Turbo-diesel applications can vary in the amount of load that can be picked-up within these specifications. Contact Woodward or consult ISO3046-4 and/or ISO8528-5 with questions about turbo specifications.*
Recovery Time	3 seconds
	Environment
Ambient Operating Temperature	–40 to +105 °C (–40 to +221 °F)
Storage Temperature	–40 to +125 °C (–40 to +257 °F)
EMI/RFI	EN50081-1 (emissions) EN50082-2 (immunity)
Humidity	US MIL-STD 810E, Method 507.3, Procedure III
Salt Spray	US MIL-STD 810E, Method 509.3, Procedure I
Shock	MS1-40G 11 ms sawtooth
Random Vibration	Random: 0.3 G²/Hz, 10–2000 Hz (22.1 Grms) 3 h/axis Sine: 5 G 2.5 mm peak-to-peak, 5–2000 Hz, 3 h/axis, 90 min dwells, 1 octave/min
Drop	SAE J1211, Paragraph 4.8.3 (modified)
Thermal Shock	SAE J1455, Paragraph 4.1.3.2
Ingress Protection	IP56 per EN60529
Electrical Load Power Connection Electrical Transient	2 J per SAE J1455, Paragraph 4.11.2.2.1

Regulatory Compliance

European Compliance for CE Marking:
These listings are limited only to those units bearing the CE Marking.

EMC Directive:	Declared to 89/336/EEC COUNCIL DIRECTIVE of 03 May 1989 on the approximation of the laws of the Member States relating to electromagnetic compatibility.

Katolight Service - Master Repair Manual - Page 3103

Other European Compliance:
Compliance with the following European Directives or standards does not qualify this product for application of the CE Marking.

Machinery Directive: Compliance as a component with 98/37/EC COUNCIL DIRECTIVE of 23 July 1998 on the approximation of the laws of the Member States relating to machinery.

North American Compliance:
These listings are limited only to those units bearing the CSA agency identification.

CSA: CSA Certified for Class I, Division 2, Groups A, B, C & D, T3C at 105 °C Ambient for use in Canada and the United States.
Certificate #1380416

This product is certified as a component for use in other equipment. The final combination is subject to acceptance by CSA International (Or UL) or local inspection.

Reliability and Quality Goals

The L-Series control system has a reliability target of 17 500 hours MTBF. It also has a quality goal of less than 25 PPM when measuring out-of-the-box defects. This quality goal is a target based on continuous improvement.

AUX 1 Analog Input

Parameter	Value
Input Type	0–5 V or ±3V DC Input
Input Scaling	0 V = 0% and 5 V = 100% range in 0-5V mode. -3V = 0% and 3V = 100% range in ±3V mode.
Max Input (Full Scale)	5 V ± 1% or 3V ±1%
Min Input	0.1 V ± 1% of Full Scale or –2.88V ±1% of Full Scale
Isolation	None
3db Circuit Bandwidth	~10 kHz
Transient Protection	According to EMC norm
Input Impedance	300 kΩ in 0–5 V synchronizing mode 10 kΩ in 0–5 V remote speed set mode 10 kΩ in ±3 V synchronizing mode
Anti-Aliasing Filter	1 anti-aliasing pole at 1 ms (159 Hz)
Resolution	10 bits
Accuracy	±1.6% of full scale over the temperature range of –40 to +125 °C, including drift
I/O Latency	6.5 ms
Calibration Method	2-point linear software calibration
Out of Range Signal	none
Overvoltage Protection	Input protected against 32 Vdc steady state

Katolight Service - Master Repair Manual - Page 3104

AUX 2–4 Analog Input

Parameter	Value
Input Type	0–5 V, Single-Ended Input
Input Scaling	0 V = 0% and 5 V = 100% range
Max Input (Full Scale)	5 V ± 1%
Min Input	0 V ± 1% of Full Scale
Isolation	None
3db Circuit Bandwidth	~10 kHz
Transient Protection	According to EMC norm
Input Impedance	499 kΩ
Anti-Aliasing Filter	1 anti-aliasing pole at 0.01 ms (15.9 kHz)
Resolution	10 bits
Accuracy	±1.3% of full scale over the temperature range of –40 to +125 °C, including drift
I/O Latency	6.5 ms
Calibration Method	2-point linear software calibration
Out of Range Signal	none
Overvoltage Protection	Input protected against 32 Vdc steady state

MPU Input

Parameter	Value
Input Magnitude	1–42 Vrms
Frequency Range	1 Hz – 12 kHz
Isolation	None
Input Impedance	113 kΩ
Accuracy	±0.25% of point (controlled engine speed in rpm) over the temperature range of –40 to +125 °C, including drift for gasoline, diesel, and gaseous engines.
I/O Latency	6.5 ms
Out of Range Frequency	12 kHz is maximum sensed frequency. Out of range is determined by user–configured overspeed and start speed settings. See Chapter 6 for configuration.

IGN Input

Parameter	Value
Input Magnitude	–200 to +250 V Max. (–100 to +150 V Min.)
Frequency Range	1–480 Hz
Isolation	None
Input Impedance	44–113 kΩ
Accuracy	±0.5% of point (controlled engine speed in rpm), over the temperature range of –40 to +125 °C, including drift, for both gasoline and gaseous applications.
I/O Latency	6.5 ms
Out of Range Frequency	480 Hz. Max (will not sense above this) Out of range is determined by user–configured overspeed and start speed settings. See Chapter 6 for configuration.

Katolight Service - Master Repair Manual - Page 3105

Discrete Input

Parameter	Value
Aux 1 Input Current	0.5 mA @ 5 Vdc
Aux 2,3,4 Input Current	10 µA @ 5 V
Input Type	Ground referenced discrete input
Delay Time for Shutdown	< 200 ms for system to recognize shutdown if used for run/stop input.
Delay Time for Reset Detection	< 1 s for valves to move to minimum position if used for run/stop input.
Max Voltage from + Connection	32 V (power input voltage)
Isolation	None, Intended for use with external relay or other dry contact
Input Threshold (AUX 1)	> 3.1 Vdc = “ON”; < 0.8 Vdc = “OFF”
Input Thresholds (AUX 2-4)	> 2 Vdc = “ON”; < 0.8 Vdc = “OFF”
Input Impedance	Aux 1: 10 kΩ; Aux 2,3,4: 499 kΩ

Discrete Output

Parameter	Value
Output Type	Low-side output driver
Max Contact Voltage (Open)	32 V
Max Current	0.5 A
Max Contact Voltage at 0.5 A (Closed)	1.5 V
Max Delay Time for Opening Contact	6.5 ms
Default at Power Up	Configurable in software
Error Condition	Configurable in software
OK Condition	Configurable in software
Driving Inductive Loads	Yes, internally protected low-side switch
Protection	Utilizes circuitry that will open the contact when output contacts are short-circuited. Self-resetting when fault is removed

TPS Output

Parameter	Value
Output Type	0–5 V, single-ended
Output Scaling	0.75 V = full CCW position and 4.25 V = full CW position
Isolation	None
3 db Circuit Bandwidth	100 Hz>—>130 Hz
Transient Protection	According to EMC norm
Output Impedance	2.8 kΩ (±1%)
Accuracy	±15% of full scale, @ 25 °C
Temperature Drift	±0.4% over the full temperature range
I/O Latency	6.5 ms
Calibration Method	Sensor-in-place factory calibration. 2-point linear
Out of Range Signal	< 0.25 V or > 4.75 V
Overvoltage Protection	Output protected against 32 Vdc, steady-state; if >28 V is applied to pin 2, a position-related error will be annunciated

Katolight Service - Master Repair Manual - Page 3106

RS-232 Serial Communication Service Port

Parameter	Value
Isolation	None
Baud Rate	Fixed 19.2 Kbaud
Electrical Interface	Outputs are TTL level. Requires external transceiver for conversion to RS-232 levels for proper communication !!
Pinout	Tx = pin 4, Rx = pin 6, Gnd = pin 3
Maximum Cable Length	10 m (33 ft), not meant for permanent connection (for service only)
Cable Type	Straight-through (no crossover)

Electronics Temperature Sensor

Parameter	Value
Accuracy	±2 °C at 25 °C ambient ±3 °C over full range (–40 to +125 °C)
I/O Latency	6.5 ms

Software Execution Rates

Software Routine	Nominal Software Execution Rate
Position Control Algorithms	1.9 ms
Speed Input & Control Algorithms	6.5 ms
Analog Input Logic	6.5 ms
Serial Port	background task
Discrete Inputs	6.5 ms
Discrete Output	6.5 ms
Diagnostics	6.5 ms

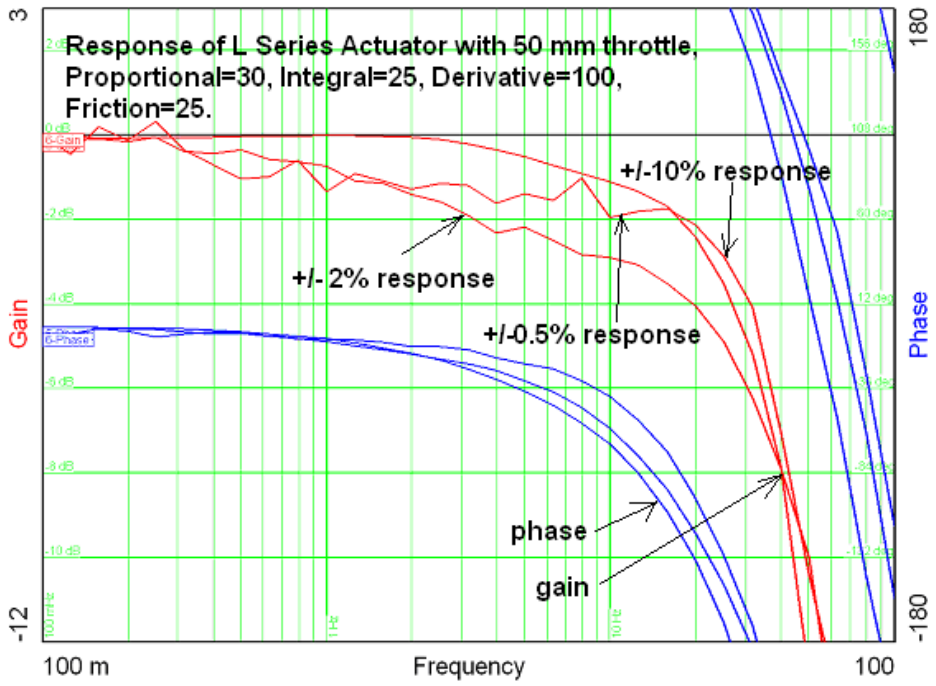

Figure B-1. Bode Plot of L-Series Response

Katolight Service - Master Repair Manual - Page 3107

DECLARATION OF CONFORMITY

According to EN 45014

Manufacturer's Name:	WOODWARD GOVERNOR COMPANY (WGC) Industrial Controls Group
Manufacturer's Address:	1000 E. Drake Rd. Fort Collins, CO, USA, 80525
Model Name(s)/Number(s):	L-Series Speed Controller 8404-1002
Conformance to Directive(s):	89/336/EEC COUNCIL DIRECTIVE of 03 May 1989 on the approximation of the laws of the Member States relating to electromagnetic compatibility
Applicable Standards:	EN 61000-6-4, 2001: EMC Part 6-4: Generic Standards – Emission for Industrial Environments EN 61000-6-2, 2001: EMC Part 6-2: Generic Standards - Immunity for Industrial Environments

We, the undersigned, hereby declare that the equipment specified above conforms to the above Directive(s).

MANUFACTURER

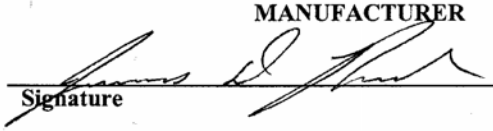

Signature

James D. Rudolph

Full Name

Engineering Manager

Position

WIC, Fort Collins, CO, USA

Place

1/15/04

Date

Declaration of Incorporation

Woodward Governor Company
1000 E. Drake Road
Fort Collins, Colorado 80525
United States of America

Product: L-Series Actuator
Part Number: 6300-1005 and similar

The undersigned hereby declares, on behalf of Woodward Governor Company of Loveland and Fort Collins, Colorado, that the above-referenced product is in conformity with the following EU Directives as they apply to a component:

98/37/EEC (Machinery)

This product is intended to be put into service only upon incorporation into an apparatus/system that itself will meet the requirements of the above Directives and bears the CE mark.

MANUFACTURER

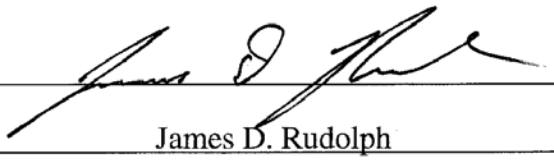

Signature

James D. Rudolph

Full Name

Engineering Manager

Position

WGC, Fort Collins, CO, USA

Place

11/13/07

Date

We appreciate your comments about the content of our publications.

Send comments to: icinfo@woodward.com

Please include the manual number from the front cover of this publication.

WOODWARD

PO Box 1519, Fort Collins CO 80522-1519, USA
1000 East Drake Road, Fort Collins CO 80525, USA
Phone +1 (970) 482-5811 • Fax +1 (970) 498-3058

Email and Website—www.woodward.com

**Woodward has company-owned plants, subsidiaries, and branches,
as well as authorized distributors and other authorized service and sales facilities throughout the world.**

Complete address / phone / fax / email information for all locations is available on our website.

04/9/F

WOODWARD

LCS ITB
LC-50





Installation, Programming, & Troubleshooting Manual for OEM/Dealer

Manual 26135D

WARNING

Read this entire manual and all other publications pertaining to the work to be performed before installing, operating, or servicing this equipment. Practice all plant and safety instructions and precautions. Failure to follow instructions can cause personal injury and/or property damage.

The engine, turbine, or other type of prime mover should be equipped with an overspeed (overtemperature, or overpressure, where applicable) shutdown device(s), that operates totally independently of the prime mover control device(s) to protect against runaway or damage to the engine, turbine, or other type of prime mover with possible personal injury or loss of life should the mechanical-hydraulic governor(s) or electric control(s), the actuator(s), fuel control(s), the driving mechanism(s), the linkage(s), or the controlled device(s) fail.

CAUTION

To prevent damage to a control system that uses an alternator or battery-charging device, make sure the charging device is turned off before disconnecting the battery from the system.

Electronic controls contain static-sensitive parts. Observe the following precautions to prevent damage to these parts.

- **Discharge body static before handling the control (with power to the control turned off, contact a grounded surface and maintain contact while handling the control).**
- **Avoid all plastic, vinyl, and Styrofoam (except antistatic versions) around printed circuit boards.**
- **Do not touch the components or conductors on a printed circuit board with your hands or with conductive devices.**

IMPORTANT DEFINITIONS

WARNING—indicates a potentially hazardous situation which, if not avoided, could result in death or serious injury.

CAUTION—indicates a potentially hazardous situation which, if not avoided, could result in damage to equipment.

NOTE—provides other helpful information that does not fall under the warning or caution categories.

Revisions—Text changes are indicated by a black line alongside the text.

Woodward Governor Company reserves the right to update any portion of this publication at any time. Information provided by Woodward Governor Company is believed to be correct and reliable. However, no responsibility is assumed by Woodward Governor Company unless otherwise expressly undertaken.

© 2001 by Woodward Governor Company
All Rights Reserved

Contents

CHAPTER 1. GENERAL INFORMATION 1
Purpose and Scope 1
Intended Applications 1
Introduction 1
Service Tool Software 4

CHAPTER 2. SYSTEM DESCRIPTION / APPLICATION OVERVIEW 5
System Operation 5
Overview of Control Application Process 5
Hardware Configuration Application Process 6
Controller Selection 8
Controller Features Description 9

CHAPTER 3. INSTALLATION 19
Mechanical Installation 19
Electrical Installation 21

CHAPTER 4. SOFTWARE PROGRAMMING 25
Software Installation 26
Working with Configuration Files 29
Real-Time Tuner 37
Working with Security Keys 38
Viewing and Resetting Fault Codes 38
Dynamics Menu 39
Controller Tuning 41
Initial File Construction 41
LC-50 Applications (Mixer Applications) 47
Air/Fuel Ratio Tuning 47
Speed Governor Applications 48
Application Development Testing 52

CHAPTER 5. TROUBLESHOOTING 53
Engine/Generator Troubleshooting 53
Programming Troubleshooting 56

CHAPTER 6. SERVICE OPTIONS 57
How to Contact Woodward 57
Engineering Services 57
Technical Assistance 59

APPENDIX A. ACRONYMS/ABBREVIATIONS 61

APPENDIX B. CONFIGURATION FILE 63
Generator Version Format (LC-50G) 63
Industrial Version Format (LC-50I) 68

APPENDIX C. DYNAMICS FILE FORMAT 73

LCS CONTROL SPECIFICATIONS 75

Katolight Service - Master Repair Manual - Page 3113

Illustrations and Tables

Figure 1-1. Block Diagram of LCS Integrated Speed Control 2
Figure 2-1. Typical Governor Application Process....6
Figure 2-2. Application Matrix....7
Figure 2-3. MAP/Boost Fuel Limiting....16
Figure 3-1. Typical LCS Application Wiring....21
Figure 3-2. Voltage Threshold Curve 22
Figure 4-1. Typical Programming Datalink Harness Wiring 25
Figure 4-2. Zirconia Oxygen Sensor Response 48
Figure 4-3. Pre-Catalyst Emissions....48
Figure 4-4. Post-Catalyst Emissions 48
Figure 4-5. Recommended Control Setting Changes 50

Katolight Service - Master Repair Manual - Page 3114

Chapter 1.
General Information

Purpose and Scope

The purpose of this manual is to provide OEMs with the necessary background information for applying the LCS ITB and LC-50 control to gas/gasoline reciprocating engines. Topics covered include mechanical installation, electrical wiring, software programming, and troubleshooting. While this manual is primarily targeted at OEM customers, OEMs themselves may find it useful to copy some of the information from this manual into their application user manuals.

Intended Applications

The LCS ITB and LC-50 controls are designed primarily for various industrial applications, including but not limited to generator sets, welders, portable refrigeration units, irrigation pumps, chipper shredders, and mobile industrial gas or gasoline reciprocating engines. Key environmental characteristics of these applications include industrial operating temperatures (–40 to +85 °C/–40 to +185 °F), European CE EMC requirements (10 V/m), minimal electrical transients (2 J load dump), and lower operating voltages (12 V) (must be fed from a Class 2 power source).

Introduction

The LCS ITB and LC-50 provide a building block approach to total engine management. The modular designs consist of a die-cast aluminum throttle body, a mixer, and a fully programmable integrated digital speed control and bi-directional actuator. The LCS ITB incorporates the Woodward LCS speed control with a throttle plate. The LC-50 adds a venturi style annular ring mixer to the LCS ITB. The units provide a number of speed setting, speed biasing, control, fuel limiting, diagnostic, and datalink functions. The controller is available in two versions, one for generator applications (G version) and one for industrial applications (I version).

A simplified block diagram of the control's functionality is shown in Figure 1-1. In most applications, the OEM will enable at least one function from each category of functions to create a valid control configuration. The functionality and characteristics of the control can be tailored using a laptop computer loaded with the Woodward Service Tool software.

The functions available are briefly described below. Chapter 2 contains a detailed description of each function and feature.

Katolight Service - Master Repair Manual - Page 3115

Speed setting functions include:

- Single speed select—Sets the speed set point to a single initial speed when power is first applied
- 50/60 Hz select—Selects between two speed set points when power is first applied to the governor (G version only)
- Idle/rated select—Selects, ramps, and delays between two speed set points while the engine is running
- Three-speed select—Selects and ramps between three speed set points while the engine is running (I version only)
- Raise/lower adjust—Ramps between two speed limits based on signal inputs while the engine is running (G version only)

Speed biasing functions include:

- Isochronous—Does not bias the current speed set point in any way
- Droop—Biases the current speed set point by a negative percentage based on actuator position (G version only)
- Aux biasing—Biases the current speed set point by a percentage based on an analog input voltage
- Isoch/droop select—Selects between isochronous and droop operation when power is first applied (G version only)
- Aux bias/droop select—Selects between aux biasing and droop operation when power is first applied (G version only)

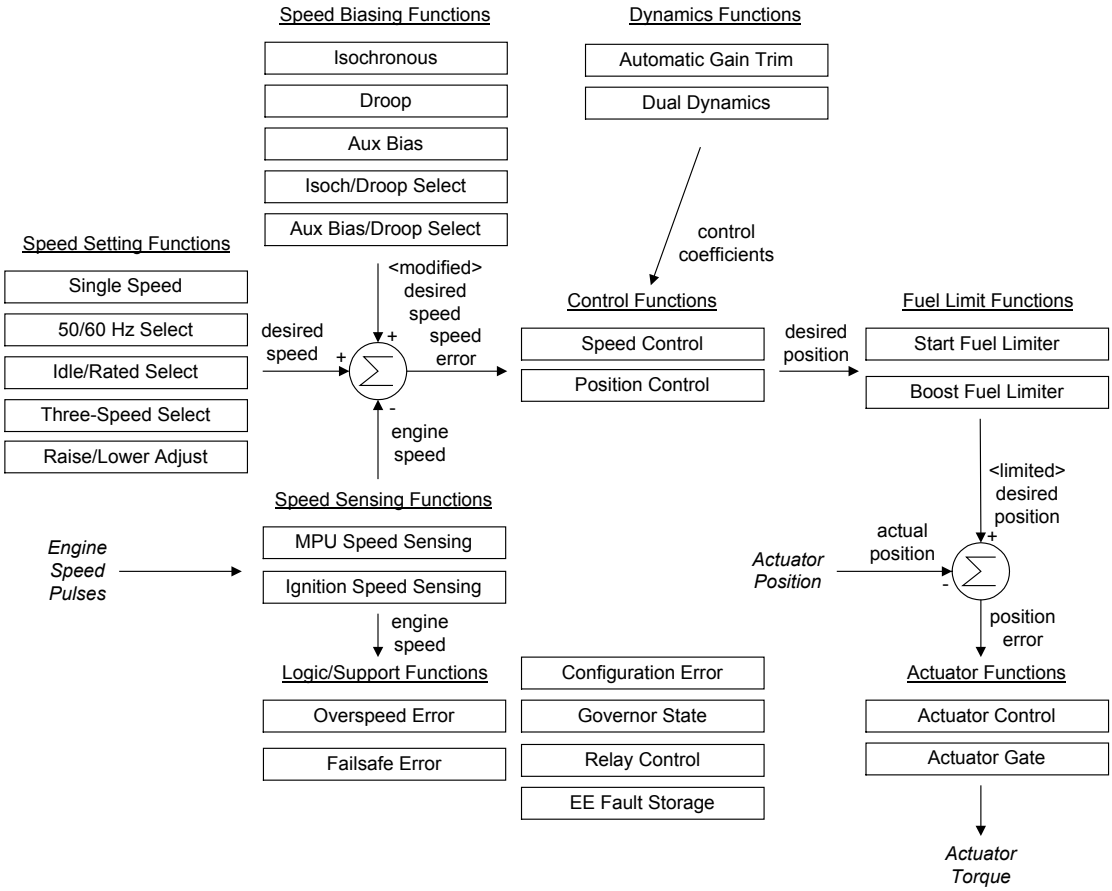

Figure 1-1. Block Diagram of LCS Integrated Speed Control

Katolight Service - Master Repair Manual - Page 3116

Speed sensing functions include:

- MPU speed sensing—Converts flywheel or gear speed pulses into engine speed in rpm
- Ignition speed sensing—Converts ignition coil fly back pulses into engine speed in rpm

Control functions include:

- Speed control—Commands a desired actuator position based on the set point versus engine speed error
- Position control—Commands a desired actuator position based on an analog input voltage

Dynamics functions include:

- Dual dynamics select—Selects between two sets of speed control coefficients while the engine is running
- Automatic gain trim—Monitors engine performance and trims speed control gain settings based on programmable criteria

Fuel limiter functions include:

- Start fuel limiter—Limits the desired actuator position during engine cranking and initial acceleration
- Boost fuel limiter—Limits the desired actuator position based on an analog voltage from a MAP sensor (G version only)

Actuator control functions include:

- Actuator control—Commands an actuator torque based on the desired versus actual actuator position
- Actuator gate—Overrides the actuator control during power up or error conditions

Logic and support functions include:

- Overspeed error—Detects when the actual engine speed exceeds a threshold
- Failsafe error—Detects a loss of the speed signal input
- Configuration error—Detects when a configuration has not been downloaded into the control
- Relay control—Controls the relay output driver during error conditions
- Fault storage—Stores a fault code in EEPROM whenever an error condition has occurred
- Governor state—Tracks the state of the engine (off, crank, start, run, or error) based on error detection functions and actual engine speed

Katolight Service - Master Repair Manual - Page 3117

Service Tool Software

Because the LCS ITB and LC-50 are digital control systems with no externally accessible adjustments, a suite of companion software tools is available to help the OEM with every phase of application development, manufacturing, and field service. The LCS ITB and LC-50 Service Tool Software is a Microsoft Windows based GUI (graphic user interface). The Service Tool Software is compatible with Windows 95/98/NT/00 and gives the OEM the ability to:

- Tune the control with the engine running during application development
- Create configuration files for downloading into multiple controls
- Download configuration files during the manufacturing process
- Extract and view fault codes for field diagnosis
- Update control dynamics during field service

One distribution of the software service tool is available from Woodward (software part number 9927-1000). This part number defaults to the dealer distribution—tools need for field support only. The OEM distribution—tools for development, manufacturing, and field support—is available by obtaining a license (part number 8928-5002). Detailed descriptions of software installation are available in Chapter 4.

Katolight Service - Master Repair Manual - Page 3118

Chapter 2.
System Description / Application Overview

System Operation

The LCS ITB and LC-50 controls are ready for operation immediately (within 0.25 second) when the power supply is connected. Power may be connected to the control at the same time the engine starter motor is engaged. Upon starting, the engine will immediately go to the speed value determined by the features that have been enabled by the Configuration Table. The actuator will drive the throttle to maintain adequate steady state and transient speed control performance.

Upon an engine shutdown command, the engine shutdown solenoid or solenoid valve in the gas fuel supply should be de-activated and the power supply disconnected from the speed control. The signal to this solenoid should be sent directly from the engine control panel and should be independent of the LCS ITB or LC-50 control.

Overview of Control Application Process

Figure 2-1 shows the typical application process used with the LCS ITB and LC-50 control. There are essentially three phases of application—development, production, and field support.

During the development phase, the OEM's engineers create a specification that calls out the features, functions, and desired performance of the final application. Then various online data gathering exercises are performed to collect critical dynamics, load, and position data from the governor. This data, along with pre-determined parameter enable, is put into an application configuration file, and the file is downloaded into a sample set of prototype assemblies. Various application tests are carried out to check the robustness of the empirical data prior to releasing it for production. The empirical data obtained to this point is specific to a given engine/driven load combination. Once, known, all other parameters can be set up in an office environment using the GUI tools.

Katolight Service - Master Repair Manual - Page 3119

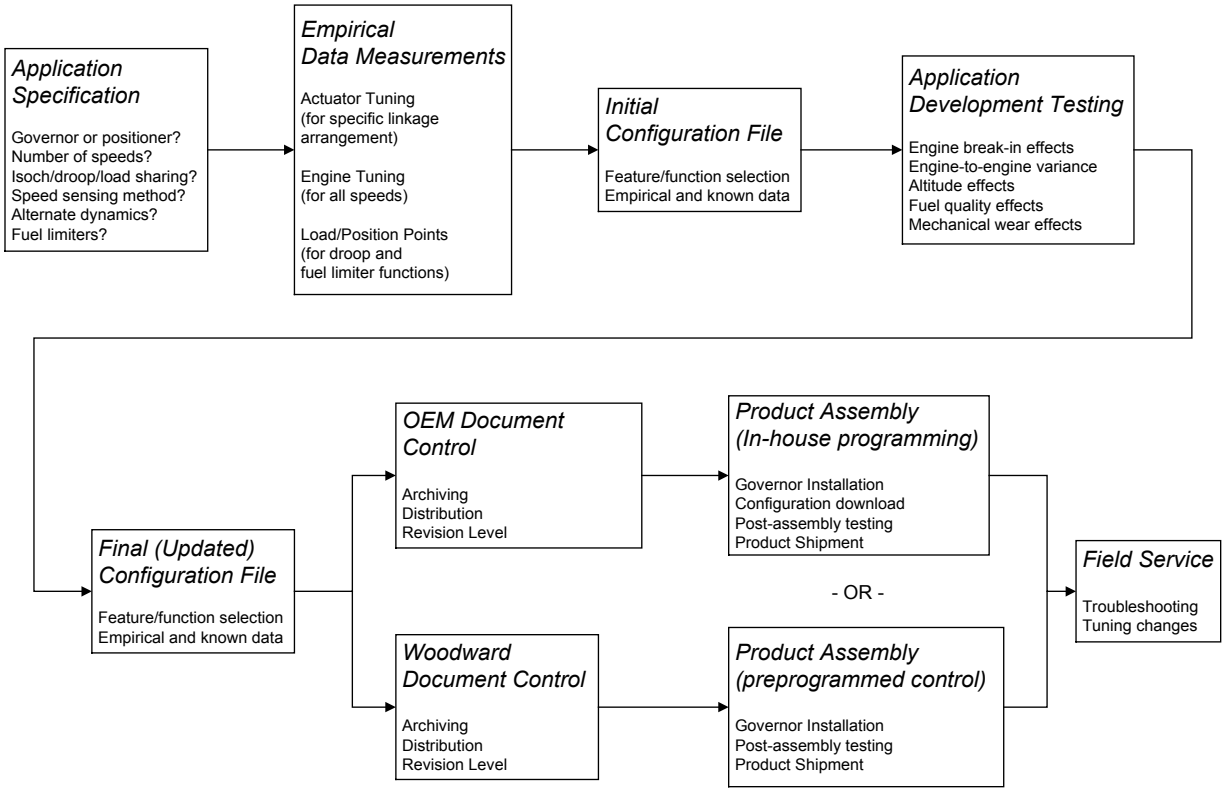

Figure 2-1. Typical Governor Application Process

The OEM can choose either to download configuration files at the OEM's facility, or to purchase pre-programmed governors from Woodward. If the choice is to download the configuration files at the OEM's facility, the OEM is responsible for all aspects of controlling the data. If the choice is to purchase a pre-programmed control, Woodward has responsibility for controlling the data in its document control system, and the OEM will be responsible for communicating software modifications to Woodward.

After the application is assembled, it is tested, shipped, and installed at its final destination. If any additional field service is required, a dealer network uses the dealer distribution of the tool set to check fault codes or update dynamics settings.

Hardware Configuration Application Process

The first step is to choose the appropriate hardware for the application. An ITB, a mixer, and a version of the actuator must be selected. The ITBs and mixers come in five different sizes.

Katolight Service - Master Repair Manual - Page 3120

For both the LCS ITB and LC-50, the user must choose the appropriately sized ITB for the application. The chart below illustrates how to choose the proper size. The intersection of the operating rpm and the engine displacement will fall in a specific ITB band. For example, a 4.0 L engine that will run at 2000 rpm, would need a 43 mm ITB, as that point falls between the two lines for the 43 mm (square marker lines.)

If the application will have multiple speed set points, some judgment needs to be used to appropriately size the throttle. In general, the highest speed where the engine will spend any significant percentage of its time, or the highest speed where efficiency (or power) is important, should be used for sizing.

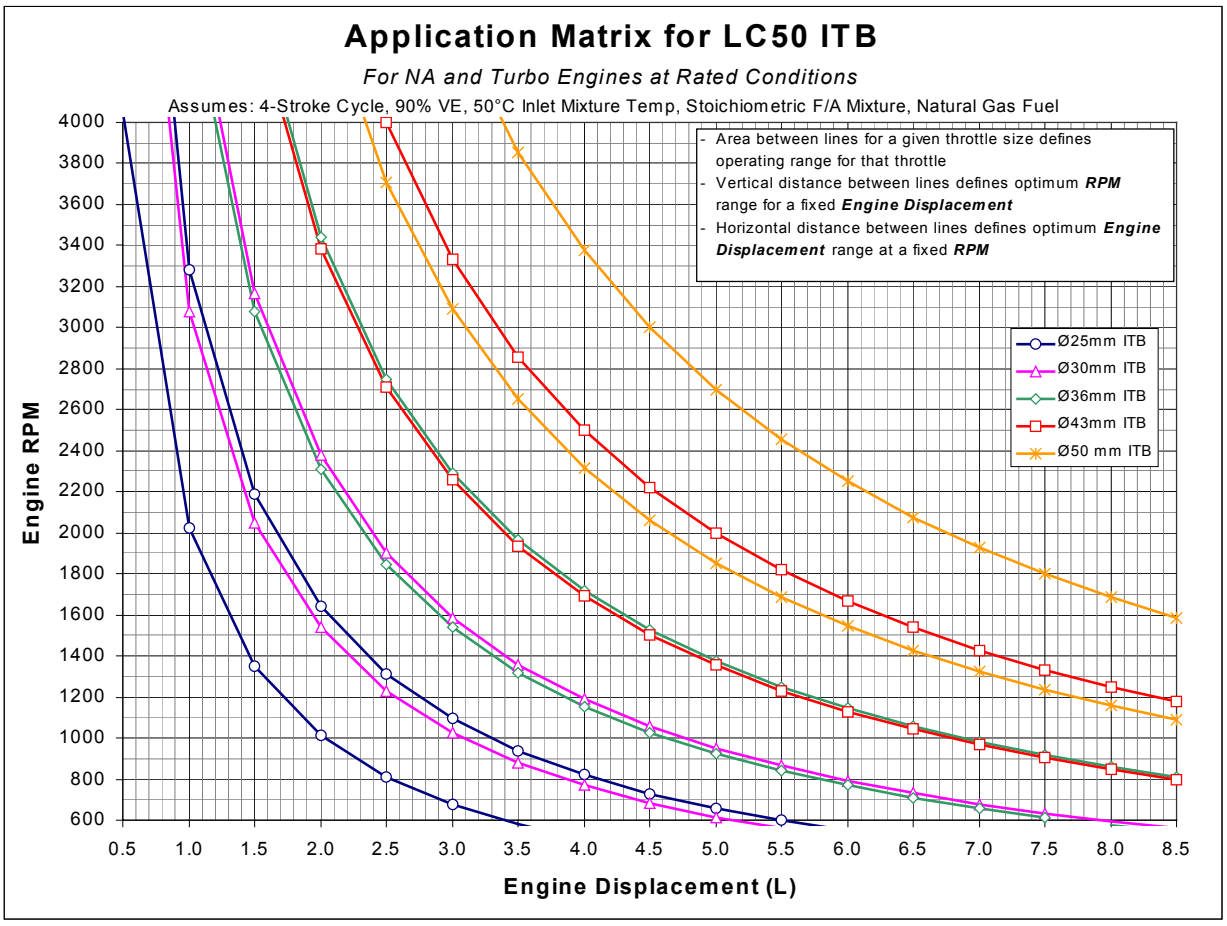

Figure 2-2. Application Matrix

If the application is an LC-50 product, there are appropriately sized mixers for each throttle size. A complete gaseous fuel delivery system requires:

- a fixed main adjustment screw (MAS) or closed-loop trim valve
- a zero-pressure regulator (ZPR)
- a fuel shut-off valve

Katolight Service - Master Repair Manual - Page 3121

The mixer supplied with the LC-50 is a venturi style mixer. By locally increasing the air speed in a pipe, the static pressure at the location of the restriction will be lower than the pressure before this restriction. When a number of orifices are made in the circumference of the venturi, the medium to be mixed (natural gas) will be drawn into the venturi throat. If the pressure of the gas is kept equal to the pressure before the venturi, the gas will be mixed with the air in a constant ratio. The pressure is kept equal to the air pressure directly before the mixer, by means of a zero pressure regulator and a compensation line. The venturi mixer is maintenance free.

A main adjustment screw or closed-loop trim valve is provided to adjust the required air/fuel ratio by means of an adjustable restriction in the fuel line between the zero pressure regulator and the venturi mixer.

The compensation line ensures that the gas pressure is kept equal to the air pressure before the venturi mixer. When no compensation line is used, the outlet pressure of the ZPR will not be balanced as the air filter becomes dirty. As the air filter gets dirty, there is an increased pressure drop after the air filter, and the air/fuel ratio will become richer.

Controller Selection

Once the ITB and mixer have been selected, an actuator/controller version must be chosen. The LCS control has an electrical connector with a 12 pin Deutsch DT configuration (reference DT04-12PA) integrally molded into its housing. Seven pins are assigned to specific functions and cannot be changed. The OEM can define the remaining five pins through the Configuration File. There is a limited amount of flexibility to provide analog input, discrete input, or output functionality. The features available are described in detail on the following pages.

The tables below show the possible assignments for each auxiliary-based function in the control. An X indicates that a particular auxiliary is always used when the function is enabled. A P or an A for a specific function denotes a primary or alternate auxiliary input assignment for the function. This P and A arrangement is intended to maximize flexibility in the feature set.

Katolight Service - Master Repair Manual - Page 3122

Generator Version

Function	Aux 1 Pins 8 & 5	Aux 2 Pin 10	Aux 3 Pin 4	Aux 4 Pin 6
Isochronous Load Sharing	X			
Remote Speed Setting	X			
MAP Fuel Limiting	X			
50/60 Hz Select	A			P
Lower Speed		X		
Raise Speed			X	
Isoch Speed Ctrl/Droop Select		A		P
Aux Bias / Droop Select	X	A		P
Dual Dynamics Select			A	P
Idle/Rated Select		X		

Industrial Version

Function	Aux 1 Pins 8 & 5	Aux 2 Pin 10	Aux 3 Pin 4	Aux 4 Pin 6
Isochronous Load Sharing	X			
Remote Speed Setting	X			
Dual Dynamics Select			A	P
Idle/Rated Select		X		
Three Speed Select		X	X	X

Controller Features Description

As you review the following features, keep in mind that most applications will only require a few of the functions to be activated. The choices are available to provide maximum flexibility in a single package. The user will at a minimum pick one feature from each of the following areas: speed setting, speed biasing, speed sensing, and control functions. From the dynamics functions area the user can set as many or as few as is necessary for stable operation. The user can choose all or none of the fuel limiter functions, actuator control functions, and logic functions depending on the application.

SPEED SETTING
Single Speed Select—This is the default setting for the controller. If no other features are enabled, the engine will run at one set speed.

50/60 Hz Select (G version only)—This feature allows the user to switch the speed set point between a primary and secondary engine rated speed. A discrete input is used to toggle between the two set speeds. The user can define whether this input comes into AUX1 or AUX4. When the engine is started with the input at the low state (ground), the controller controls to the primary speed setting and uses dynamics for the primary speed. When the engine is started with the pin in the high state (12V), the controller will run at the secondary speed setting with the corresponding second speed dynamics. Any state changes on the AUX pin will be ignored once the engine is running. The state is determined only when power is first applied to the governor.

Related configuration file parameters: 50/60 Hz select, 50/60 Hz Aux, speed 1, speed 2, and primary dynamics for both speeds

Katolight Service - Master Repair Manual - Page 3123

Idle/Rated Select (G version only)—This feature allows the user to toggle the speed set point between an idle and a rated speed. The toggle is accomplished through an input into AUX2. When the AUX pin is in its low state, the engine runs at idle speed with the primary set of dynamics. When the AUX pin is in the high state, the engine runs at the higher rated speed with the corresponding dynamics. The user can toggle between the two speed settings at any time during operation. Transition rates between the two speeds can be controlled at a user defined ramp rate if desired. If the user defined ramp rate is 0, the new set speed is instantly engaged. When the AUX pin transitions from high to low (rated to idle), a programmable time delay is executed before the desired speed is ramped from rated to idle. For example in welder applications it may be desirable to have a time delay before decelerating from rated to idle (to allow some time to change the welding rod).

Related configuration file parameters: idle/rated select, rated to idle delay, speed 1, speed 2, primary dynamics for both speeds, speed decrease rate, speed increase rate

Three-Speed Select (I version only)—Some refrigeration applications may find it useful to have three engine speeds available: a highest speed for quick cool down when warm goods are put into a container, a lowest speed to maintain the load's temperature once it has been cooled, and an intermediate speed for increased cooling if the container door is opened to move goods in or out. Typically, the discrete inputs for each of these speeds will come from an automatic thermostat, and only one will be high at a time. Mobile access platform (scissor lift) applications may also require three engine speeds, which correspond to three basic operating modes: static lift, transient lift, and mobile vehicle travel.

AUX2, AUX3, and AUX4 are used to select between three speeds. If none of the inputs are tied to +12 V, the current speed and control dynamics are used by the Speed Control function. If AUX2 is tied to +12 V, the desired speed is speed 1 with the corresponding gain dynamics. If AUX3 is high, the desired speed is speed 2 with the corresponding gain dynamics. If AUX4 is tied to +12V, the desired speed is speed 3 with the third set of gain dynamics. Transition rates between the three speeds can be controlled at a user defined ramp rate if desired. Any ramp rate set at 0 causes the desired speed to be set to the speed reference instantly. AUX2, AUX3, and AUX4 must be associated with the lowest, middle, and highest engine speeds, respectively. If more than one AUX input is tied to +12 V, the lower of the two speeds is selected.

Related configuration file parameters: 3 speed select, speed 1, speed 2, speed 3, primary dynamics for all speeds, speed decrease rate, speed increase rate

Raise/Lower Adjust (G version only)—This feature allows the user to change the speed set point with external discrete inputs.

Related configuration file parameters: raise / lower speed, speed decrease rate, speed increase rate, speed adj lower limit, speed adj upper limit

Katolight Service - Master Repair Manual - Page 3124

Lower—This AUX2 discrete input acts directly on the internal speed set point within the LCS ITB and LC-50, and will progressively decrease the speed set point down to a programmable lower limit at a programmable rate for as long as the input is in a high state. When this input goes low, the speed reference will remain fixed at the last setting reached the instant the input went low.

Raise—This AUX3 discrete input acts directly upon the internal speed set point within the LCS ITB and LC-50, and will progressively increase the speed reference up to a programmable upper limit at a programmable rate for as long as the input is in a high state. When this input goes low, the speed reference will remain fixed at the last setting reached the instant the input went low.

SPEED BIASING

Isochronous—This is the default speed biasing function if none of the other speed biasing functions are selected. This maintains the engine at one speed setting throughout operation regardless of load.

Droop—This feature allows for a change in speed set point with a change in load. This feature is primarily used when the generator is connected to a utility bus or paralleled with another genset on an isolated bus. In this situation, the utility will determine the frequency of the alternator. Should the governor speed reference be less than the utility frequency, power in the utility bus will flow to the alternator and motor the unit. If the governor speed is even fractionally higher than the frequency of the utility, the governor will go to full load in an attempt to increase the bus speed. Since the definition of a utility is a frequency that is too strong to influence, the engine will remain at full fuel.

Isochronous governor control is impractical when paralleling with a utility because a speed setting above utility frequency, by however small an amount, would call for full fuel since the actual speed could not reach the reference speed. Similarly, if the setting were even slightly below actual speed, the fuel would go to fuel off position.

Droop provides one solution to this problem. Droop causes the governor speed reference to decrease as load increases. An actuator position feedback device is employed within the LCS ITB and LC-50 to monitor actuator position. Setting Droop to 0% means the control will provide isochronous operation. The desired engine speed reduces with the following formula:

$$\frac{\text{speed reference} * \text{droop percentage} * (\text{actual position} - \text{no load actuator position})}{(\text{full load actuator position} - \text{no load actuator position})}$$

The speed offset calculation requires valid information in the droop percentage, no load actuator position, and full load actuator position parameters.

Related configuration file parameters: constant droop, droop percentage, no load act pos, full load act pos

Katolight Service - Master Repair Manual - Page 3125

Aux Biasing (Isochronous Load Sharing)—This feature allows the user to alter the speed set point with an external signal. This input comes into AUX1, and is programmable as either a 0–5 V input or ±3V input. This function modifies the desired engine speed with the following formula:

speed reference * bias percentage * offset AUX1 input voltage

The bias percentage is a programmable value up to approximately ±7%. When AUX1 is configured as a 0–5 V input, 5 V corresponds to the full bias percentage in a positive direction; 0 V corresponds to the full bias percentage in a negative direction; and 2.5 V corresponds to no bias. This analog input should be provided by a voltage transmitter via twisted, shielded wire pairs.

When AUX1 is configured as a ±3 V input, +3 V corresponds to the full bias percentage in a positive direction; –3 V corresponds to the full bias percentage in a negative direction. This analog input will be available to interface with Woodward's standard Load Sharing Module. This auxiliary input acts directly on the LCS ITB and LC-50 speed reference and biases it by a programmable amount up to approximately ±7% in direct proportion to the ±3.0 Vdc signal. This input will be active only when the LCS ITB and LC-50 is selected for isochronous operation and should be provided via twisted, shielded wire pairs.

Isochronous Speed Control/Droop Select—This discrete input toggles between the Isochronous and Droop features. The function looks at the state of AUX4 or AUX2 (user-defined) at power up, as well as the state of the input as defined by the user. The state of this AUX input is evaluated when power is first applied. Any state changes after the engine is running are ignored.

The user can program the aux input state that enables droop. This is done by programming droop polarity to aux high (12 V) or aux low (ground). For example, if droop polarity is programmed to aux high, then droop will be active when the aux pin is in the high state.

Related configuration file parameters: aux bias, bias percentage, aux 1 type, aux 1 level

Aux Bias/Droop Select—This discrete input toggles between auxiliary biasing (also known as isochronous load sharing) and droop. The function looks at the state of AUX4 or AUX2 (user-defined) at power up, as well as the state of the input as defined by the user.

The user can program the aux input state that enables droop. This is done by programming droop polarity to aux high (12 V) or aux low (ground). For example, if droop polarity is programmed to aux high, then droop will be active when the aux pin is in the high state.

Related configuration file parameters: aux bias / droop select, droop percentage, aux biasing percentage, no load act pos, full load act pos, droop polarity, droop aux, aux 1 type, aux 1 level

Katolight Service - Master Repair Manual - Page 3126

SPEED SENSING

Magnetic Pickup (MPU)—The MPU input has been designed for variable reluctance speed sensors and not Hall-effect devices. The frequency range of the MPU input is: 100 Hz to 12 000 Hz (designed to accept at least 14 000 Hz to provide a margin of safety). The required minimum peak-to-peak voltage is 2 V @ 100 Hz and 25 V @ 12 kHz.

This function expects engine speed pulses present on pins 11 (MPU+) and 3 (MPU–). The number of flywheel or gear teeth that pass the magnetic pickup for one crankshaft revolution must be programmed into events per engine rev in the configuration file.

Related configuration file parameters: mpu, flywheel teeth

Ignition—The LCS ITB and LC-50 control will accommodate a 2–333 Hz signal from an ignition input for 1, 2, 3, 4, 5, 6, and 8 cylinder engines with speed set points between 1200 and 3600 rpm. The LCS ITB and LC-50 controls can accommodate 2- and 4-cycle engines. For standard coil ignition, the source may be the negative terminal of the coil primary. For distributorless or DIS (Direct Ignition System) systems, the source for the ignition pulses may be two ignition leads from the spark controller connected to MPU+ (pin 11) and MPU– (pin 3). Take care not to reverse MPU+/– on a DIS system, or no speed will be sensed.

This function requires engine speed pulses present on pin 12 (IGN) of the control. The type of engine (2-stroke or 4-stroke) and the number of cylinders (1 to 8) must also be programmed in this parameter byte.

Related configuration file parameters: ignition, cylinders count, strokes

CONTROL FUNCTIONS

Speed Control—This function is the governor function. It calculates the difference between the desired speed and the actual measured engine speed, and adjusts the desired actuator position as a result. Speed setting functions and alternate dynamics functions are responsible for selecting the active speed set point and set of dynamics for this function. The user must choose either this function or the position control function. They cannot both be enabled.

Position Control—Commands a desired actuator position based on an analog input voltage. This function requires AUX1 is configured as a 0–5 V analog input. This function also requires that the Actuator Control and Actuator Gate functions are turned on. This function does not require the Governor State function to be enabled. The Position Control function essentially overrides the Governor State function and translates a 0–5 V input into a desired position for the Actuator Control function.

Katolight Service - Master Repair Manual - Page 3127

NOTE

The accuracy of the internal LCS position sensor is nominally ±10% of full travel, and under some conditions can be ±20% of full travel. If you are not using the full stroke of the actuator, this will magnify the existing error of the LCS position sensor. Position-based features need to be used cautiously and calibrated carefully. In summary, if you need better than ±10 degrees of accuracy for position-based features, mechanical alternatives should be considered.

Related configuration file parameters: position control, aux 1 type, aux 1 level

DYNAMICS FUNCTIONS

A variety of dynamics or gains are available for tuning the engine and throttle response. The user can use as few or as many as desired. The response of the throttle blade, or position control, is controlled by PID (proportional, integral, and derivative) control terms. The speed control of the engine is controlled by reset, gain, and compensation terms. Multiple sets of speed control dynamics parameters are available for each engine speed. For the generator version, four distinct sets of dynamics are available. The industrial version of the software has 6 sets of dynamics available.

Three-Point Gain Curve—The engine speed control gain is set up as a three-point gain curve versus position to adjust for linearity of the throttle body and engine response. For example, at low throttle positions a small change in throttle angle can cause a large kW change, while at high throttle positions it can take a large change in throttle angle to produce a relatively small change in kW out. The three-point gain curve corrects for this characteristic. The position breakpoints are common for all speeds and dynamics. Typical values are

Gain 1	25
Gain 2	40
Gain 3	100
Gain Position 1	25
Gain Position 2	30
Gain Position 3	40

Related configuration file parameters: gain 1, gain 2 and gain 3 for primary and alternate dynamics as required, gpos 1, gpos 2, gpos 3

Dual Dynamics—This feature allows for toggling between two sets of user-defined dynamics or gains. The two sets of gains are referred to as the primary and alternate dynamics. This feature is mainly used for dual fuel engine applications where engine response can change from operation on one gaseous fuel to another. This feature may also be used for generator sets to allow different dynamics for standalone and parallel operation. When this input is low, the primary set of dynamics is used. When this input goes high, the dynamic set points will immediately change to alternate dynamics and remain there until the input is returned to the low state. When this feature is active, the LCS ITB and LC-50 react to state changes at the user defined AUX3 or AUX4 while the engine is running. Primary and alternate dynamics exist for each speed setting.

Related configuration file parameters: alternate reset and gains for each speed being used

Katolight Service - Master Repair Manual - Page 3128

Automatic Gain Trim—To correct for engine power variation and its effect on governor performance, the LCS includes an automatic gain adjustment function that trims the gain of the controller based on steady-state and transient engine speed performance measurements. Based on performance criteria programmed into the LCS and the stability or load transient performance of the engine, the function will increase or decrease the currently active gain setting. This function can be used to combat the effects of engine break-in, engine-to-engine variance, altitude, temperature, and fuel quality. This function is not intended to mask serious engine faults, like broken spark plugs, large vacuum leaks, or other such failures. The automatic gain adjustment function can be disabled.

This function continuously monitors the speed of the engine relative to the currently active speed reference. If this function observes a steady-state speed band that exceeds a programmable set point, then the currently active gain parameter is decremented by a programmable amount until a programmable minimum gain setting is reached. If this function observes a transient offspeed that exceeds a programmable set point, then the currently active gain parameter is incremented by a programmable amount until a programmable maximum gain setting is reached.

Related configuration file parameters: gain decrement, gain increment, minimum gain, maximum gain, steady state, transient

The auto gain feature requires significant testing to configure properly. For details on how to complete this testing, please contact Woodward.

NOTE
Enabling the auto gain feature without performing the proper testing can cause engine instability.

FUEL LIMITER FUNCTIONS

NOTE
The accuracy of the internal LCS position sensor is nominally ±10% of full travel, and under some conditions can be ±20% of full travel. Position-based features need to be used cautiously and calibrated carefully.

Start Fuel Limiter—A Start Fuel Limiter feature is included within the LCS control. It sets the throttle valve partially open during cranking and while the engine is accelerating to its desired speed set point in order to minimize overshoot of the speed set point. The action of this start fuel limiter is as follows:

When power is applied to the LCS system, its actuator remains in the minimum fuel position until the starter is engaged and actual engine speed exceeds a user defined start speed threshold. As soon as the engine speed exceeds this threshold, the actuator will position at the start fuel limit. The engine continues to accelerate. When the actual engine speed exceeds the user defined run speed threshold, the start fuel limit is removed, the governor is free to use the entire position range, and the failsafe and overspeed limiters are activated. The run speed threshold is typically 75% to 90% of the minimum desired operating speed.

Katolight Service - Master Repair Manual - Page 3129

The Start Fuel Limiting function is automatically reset whenever power is removed from the LCS control. The Start Fuel Limit feature can be disabled in the Configuration Table so that the feature is not used.

Related configuration file parameters: start fuel limiter, start spd thresh, start fuel limit

Boost Fuel Limiter (MAP fuel limiting)—This analog input should come from a manifold air pressure (MAP) or turbo boost pressure transducer so that the fuel delivered to the engine can be limited as a function of pressure. A two-slope Fuel Limit vs. Transducer Voltage (air pressure) curve—having three definable points—can be programmed into the Configuration Table to provide the desired fuel limit functionality. Note that the transducer should be powered from the LCS control to avoid a ratiometric calibration issue that would affect the accuracy of this function. Pressure transducers can be obtained from Woodward.

This feature can be useful when using a non-wastegated turbo to avoid overloading the engine. As the MAP reaches an overboost condition, the LCS will close the throttle down as indicated in the figure. A MAP sensor can be more economical than a waste-gated turbo; however, a wastegated turbo may spool up faster.

Related configuration file parameters: boost fuel limiter, boost pressure 1-3, boost fuel limit 1-3

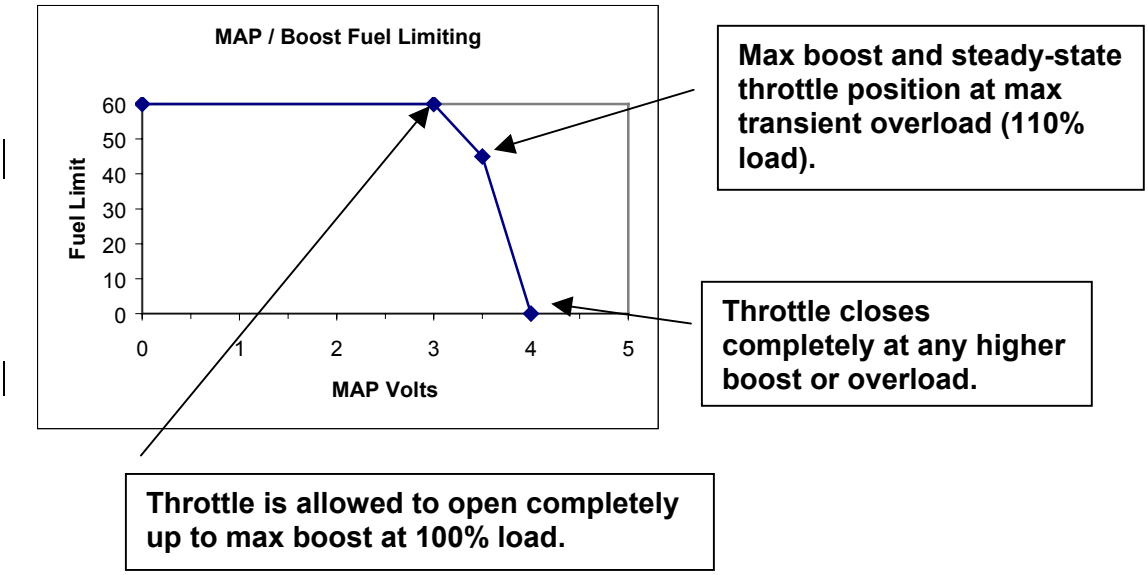

Figure 2-3. MAP/Boost Fuel Limiting

ACTUATOR CONTROL FUNCTIONS

Actuator Control—This function calculates the difference between the desired position and the actual measured actuator position, and adjusts the actuator torque as a result. Proportional, derivative, and integral parameters are referenced by this function. This is the position control loop.

Katolight Service - Master Repair Manual - Page 3130

Actuator Gate—When the governor state is 'powerup,' this function overrides the output of the Actuator Control function and prevents the actuator from developing any torque. When the governor state is 'start' or 'run,' this function passes the torque command of the Actuator Control function directly to the actuator. When the governor state is 'error' this function overrides the output of the Actuator Control function and drives the actuator to minimum fuel, which is dependent on the direction setting in the configuration. These gates control the start fuel limit and fault conditions.

LOGIC AND SUPPORT FUNCTIONS

Overspeed Error—The LCS control has an overspeed function that can be set by the OEM to shut down the engine at a speed that is typically 110% of rated speed. When the control senses this speed, it will drive the throttle to minimum position, turn on the relay contact output (if enabled), and the software will store a fault bit in EEPROM (if fault storage is enabled). Cycling power to the LCS will restore normal operation, but the fault bit will remain in non-volatile memory until reset.



WARNING

The LCS control should never be used as the primary overspeed protection device.

Related configuration file parameters: overspeed, EE fault storage, relay control, overspeed thresh

Failsafe Error—To protect the engine against overspeed upon loss of the speed input signal, the control will drive the actuator to minimum throttle anytime the control senses a missing speed input for a programmable amount of time not to exceed 0.5 second. The relay contact output will also be turned on (if enabled) and the software will store a fault bit in EEPROM (if fault storage is enabled). Cycling power to the LCS will restore normal operation, but the fault bit will remain in non-volatile memory until reset.

Related configuration file parameters: Failsafe, Failsafe timeout period, EE fault storage, relay control

Configuration Error—The Configuration Error function is permanently enabled to check for the presence or absence of a configuration file in the control during power-up. If a configuration error is detected, software sets the configuration error flag, activating the relay output and rendering the control inoperable until the power is cycled.

Relay Control—This switchable, discrete output is a closure to ground capable of sinking 250 mA with an output voltage rise of less than 1.5 V, and is available to power external relays for devices such as fuel shutoff solenoids. It has an internal protection diode, so it is not necessary to provide one externally. This output is normally floating with a very weak resistor to an internal +5V, but when an error condition occurs (overspeed, configuration, failsafe), this output sinks up to 250 mA to ground.

Katolight Service - Master Repair Manual - Page 3131

There are two conditions that will prevent this output from operating. The first is if battery positive is accidentally connected to it, and the second is if it is shorted to ground. If this output is intended to drive a fault light, these conditions will not be obvious.

Fault Storage—Enabling this bit turns on the EE Fault Storage function when the governor state is ‘error’. When the governor state transitions to ‘error,’ the source of the error (configuration, overspeed, or failsafe) is stored as a set bit in the control fault register of the LCS’s EEPROM.

Governor State—This function sets an internal state variable to one of four values (powerup, start, run, or error) based on the current engine speed and error function data. When power is first applied to the governor, its state is ‘powerup.’ As the engine is cranking and its speed exceeds the start speed threshold, the state of the governor changes to ‘start’. When the engine speed exceeds the run speed threshold, the state of the governor changes to ‘run’. If any of the speed error functions (overspeed, failsafe) are enabled, and they detect a speed error, then the state of the governor transitions to ‘error’ and remains there until power to the control is cycled. This function is required for all speed governor applications; it is not required for positioner applications.

Password Protection—This feature allows an OEM to password protect the configuration files. This prevents unauthorized dealers or competitors from reading configuration, dynamics, or fault information from the OEM’s controls. In general the OEM should only use one security key for all LCS applications; otherwise multiple copies of service tools and security key files will be required. If you choose to put a value in this parameter, then you will also have to generate companion encrypted security key file using the software tools and distribute this key file with the dealer service tools.

If an OEM decides to put a value into the OEM SECURITY KEY field, and downloads that configuration file into a control, the OEM must supply an encrypted security key file called ACCESS.KEY when giving the OEM dealer network a copy of the dealer service tools. If a dealer tries to work with an LCS control and does not have a ACCESS.KEY file, the tool will not permit access to the control’s data.

Related configuration file parameters: OEM Security Key, Make Key function

Katolight Service - Master Repair Manual - Page 3132

Chapter 3. Installation

Mechanical Installation

Locate the LCS control a distance from sources of extreme radiant heat, such as exhaust manifolds or turbochargers. The operating temperature range of the control is –40 to +85 °C (–40 to +185 °F). In spark-ignited applications, make sure the LCS is located away from the ignition coil, and that harness wires are not routed next to the spark plug wires.

While it is not a requirement, it is good practice to orient the connector feature on the control in a horizontal or downward orientation to minimize fluid accumulation between the enclosure and the mating connector's gasket.

The 25, 30, and 36 mm throttles mount with 5 mm fasteners in a 43 mm square bolt pattern. The 43 and 50 mm throttles use 6 mm mounting screws in a 57 mm square pattern.

The LCS actuator has a rotation of 0–60 degrees. To get full blade rotation on the ITB, a mechanical linkage exists inside the ITB that converts 0 to 60 degrees actuator rotation to 3 to 85 degrees blade position.

The LC-50 mixer can be mounted in any of three orientations of the ITB to allow convenient fuel system connections. The LCS ITB and LC-50 are intended to be used with gaseous fuels from low quality pipeline natural gas to HD-5 LPG. The quality of this range of fuel varies from a lower heating value of 850 BTU/SCF (34.0 MJ/m³) to 2325 BTU/SCF (93.0 MJ/m³), and the specific gravity varies from 0.55 to 1.56 relative to air. When using a Woodward supplied ZPR, fuel pressure should be 0.25 psi (7" water column) (1.7 kPa [178 mm water column]) to 1 psi (28" water column) (6.9 kPa [711 mm water column]). Pressure supply range is 4–14" water for the R500Z, and 4–28" water for the R600Z.

The LC-50 mixer has two inlet sizes for air filter attachment. The smaller throttles (25, 30, and 36 mm) have a 2.0-inch (50.8 mm) inlet. The larger throttles (43 and 50 mm) have a 2.5 inch (63.5 mm) inlet.

We recommend installing all components of the gas system, such as air filter, main adjustment screw, and throttle valve in a symmetric way to minimize possibility of unequal mixture distribution.

Curved pipes should not be installed closer to the venturi than 3D (where D is the diameter of the venturi at the air inlet side).

Woodward recommends that you install a compensation line between the ZPR and the air inlet to maintain consistent air/fuel ratio throughout the life of the system. If a compensation line is not installed, the air/fuel ratio will be affected by the changing restriction of the air cleaner as it accumulates dirt.

Katolight Service - Master Repair Manual - Page 3133

If the Maxitrol ZPR is obtained from Woodward, the following installation instructions apply. If another brand of ZPR is used, consult that manufacturer for installation guidelines. The ZPR should be mounted with the spring tower up. If it is not, the weight of the diaphragm and spring can offset the pressure setting. The ZPR should be mounted as close to the MAS as possible to prevent pressure drop across excessively long pipe lengths. This pressure drop and associated system lag can cause stability and response issues with the mixer air/fuel ratio control.

On a turbo-charged engine, the mixer should be located before the turbo compressor. This will yield very high mixture homogeneity as well as allowing the use of a standard ZPR and the ability to use low-pressure gas. To increase safety, some engine manufacturers have mounted flame arrestors between the inlet manifold and the cylinder head, ensuring that a backfire does not lead to an explosion in the inlet manifold, aftercooler, etc., which are filled with ignitable mixture.

The initial settings for the MAS and ZPR are indicated in the table below. These settings should provide the ability to consistently start and run at an approximately stoichiometric air/fuel ratio. The procedure for adjusting these settings for optimum air/fuel ratio will be described in the air/fuel ratio tuning section (Chapter 4). The main adjustment screw (MAS) settings are measured from the MAS valve body (not the jam nut) to the exterior end of the MAS screw. The zero-pressure regulator settings are measured from the top of the spring adjustment screw to the top of the spring tower.

For dual-fuel configurations, the standard NG fuel set up should have a tee added between the ZPR and MAS. The side-leg of the tee should then have the MAS and ZPR for the LP fuel. The initial settings for dual-fuel NG and LP are the same as the single-fuel settings below. The final air/fuel ratio adjustments should be done on NG first, then LP, using the procedure in Chapter 4 for each fuel.

MAS and ZPR Initial Settings

ITB Size	Natural Gas	Propane
50 mm	**Screw Setting Position (mm)**	
MAS	19	16
ZPR	16	14
43 mm		
MAS	17	15
ZPR	16	14
36 mm		
MAS	11	9.5
ZPR	14	14
30 mm		
MAS	11	9
ZPR	14	14
25 mm		
MAS	10	8
ZPR	14	14

Katolight Service - Master Repair Manual - Page 3134

Electrical Installation

A pinout of the LCS control, as viewed by looking into the control's connector feature, is shown in Figure 3-1. Typical connections to external devices are also shown.

The LCS has an operating voltage range of 8 to 16 Vdc with a nominal voltage of 13.5 V. The power supply is load dump and reverse polarity protected, and consumes 64 W maximum power at a peak current of 4 A (16 V) assuming 4 Ω stator resistance at 25 °C. The control system should be protected with a 6 A fuse in the voltage supply lines. Typical max average current is 1.8 A, or max 29 W at 16 V. The application should be configured to turn on power to the governor when the engine is first cranked. Power should be removed just before the engine is shut off so that the actuator loses torque and the return spring can move the throttle to a minimum fueling position.

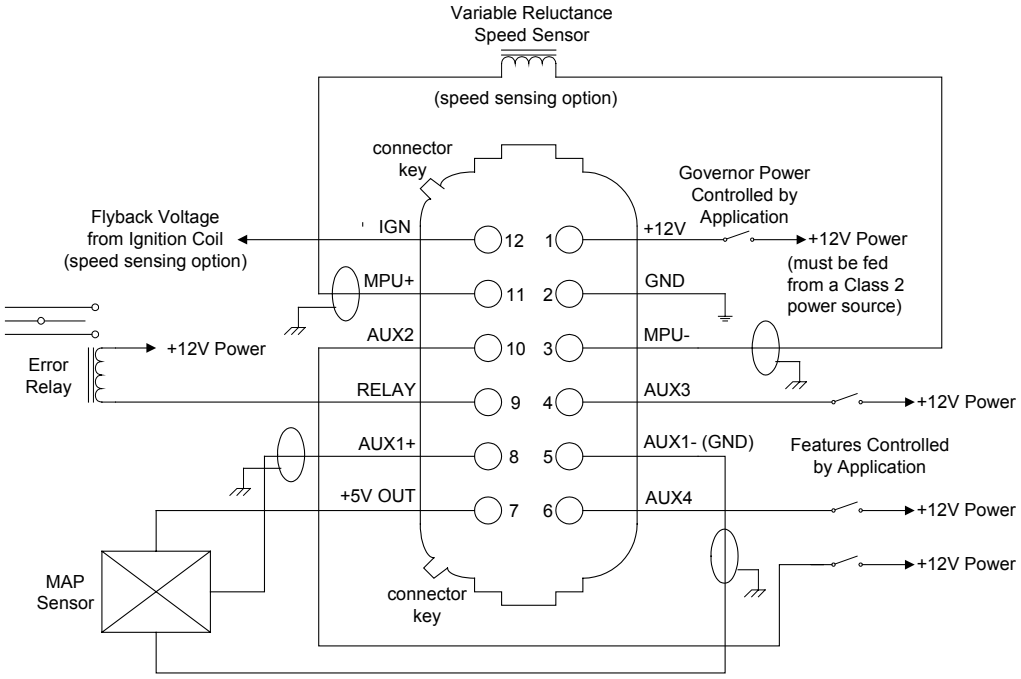

note: AUX1+ and AUX1- can also be used as a +/-3V load sharing input
note: AUX1+ can also be used as a digital input like AUX2, AUX3, and AUX4

Pinout as Viewed Looking Into LCS Control

Figure 3-1. Typical LCS Application Wiring

Katolight Service - Master Repair Manual - Page 3135

Several speed sensing options are supported. The LCS can sense speed from ignition coils, DIS modules, or variable reluctance magnetic pickups (MPU). When using the LCS with an ignition coil, attach the IGN input to the switched side of the coil's primary; typically this is the negative (–) terminal of the coil. Do not rely on the condenser connections to determine which side of the primary coil is the switched side—use a tachometer or frequency meter to check for engine speed.

When interfacing the LCS to a DIS module, connect the LCS control's MPU+ (pin 11) and MPU– (pin 3) input pins to the DIS module's signal and ground input pins. Be careful not to accidentally swap the connections; otherwise the engine will not start.

When using a variable reluctance magnetic pickup, make sure the gap between the pickup and the flywheel or gear teeth is sufficiently small so that the sensor output voltage meets or exceeds the voltage threshold curve shown in Figure 3-2 for the full range of engine speeds. The resistance of the MPU must be less than 900 Ω.

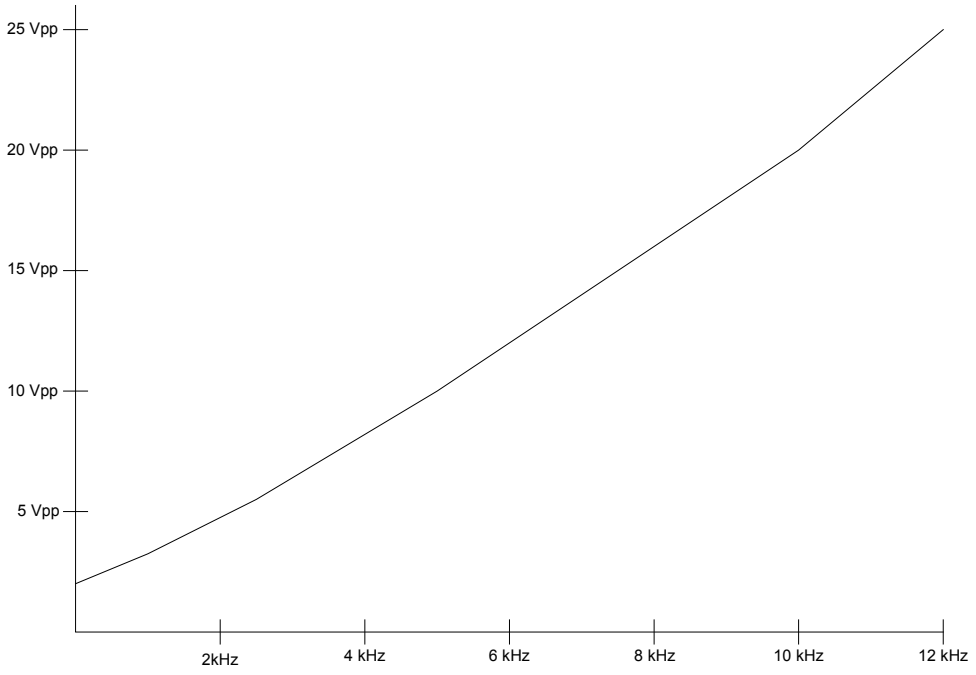

Figure 3-2. Voltage Threshold Curve

The relay output driver is activated any time the governor detects an error condition (overspeed, failsafe, or configuration error). The driver sinks up to 250 mA of current through an external device powered from +12 V. This driver is internally protected against inductive flyback.

Katolight Service - Master Repair Manual - Page 3136

The +5 Vdc Power Output is intended to power the pressure transducer used with the manifold air pressure-biased fuel limiter function. The maximum output current is 10 mA. If the external wire associated with this function is shorted to ground, the actuator will lose its power and the ITB return spring will close the throttle. If the short persists, the control's internal regulator may go into thermal shutdown but should not be permanently damaged. If the short is cleared, the 5 V supply will return after the regulator chip cools down. Use special care when routing wire to this pin. Use well-insulated wire, and be sure to grommet any holes in sheet metal through which it may be routed.

The LCS has three dedicated digital inputs (AUX2, AUX3, and AUX4) used to activate various features of the control. Shorting an input pin to +12 V activates it. Removing +12 V from an input pin or shorting the pin to ground deactivates the input. At least 4 volts must be present on an input pin in order to change its state from inactive to active. All discrete inputs will be the same voltage as the system power supply and will be active only while the input is in a high state. Greater than 4 Vdc is considered high, and less than 1 Vdc is considered low.

All connector pins are short-circuit protected to ground and power except pins 2, 3, and 5, which are not protected against shorts to battery positive. Installation of a fuse on the power ground wire to pin 2 would provide protection to these pins but does not mean one is not needed in the power connection. Pin one (B+) still needs protection against a short to ground.

A combination analog/digital input (AUX1) is available on the LCS. When AUX1 is configured as a digital input, it must be grounded (not opened) to deactivate, but otherwise the AUX1+ pin is treated the same way as AUX2, AUX3, and AUX4. When the pin is used as a discrete input, it will have minimum impedance of 10 kΩ, and when configured as an analog input, it would have minimum impedance of 100 kΩ. When AUX1 is configured as a ±3 V analog input, the LCS may be interfaced to other Woodward load sharing equipment through the AUX1+ and AUX1– inputs. When AUX1 is configured as a 5 V analog input, +5V OUT, AUX1+, and AUX1– may be used to sense manifold absolute pressure or bias engine speed with a potentiometer.

The following Deutsch connector components are recommended for harness designs:

	Recommended	**Optional**
Mating Connector	DT06-12SA-P012	DT06-12SA
Secondary Lock	W12S-P012	N/A
Sockets	0462-201-16141	0462-201-16141

Woodward part number 8928-396 is a kit that provides all the necessary Deutsch components.

Katolight Service - Master Repair Manual - Page 3137

Use 16 to 18 AWG (1 to 1.5 mm²) stranded copper wire with insulation that meets temperature requirements in the harness design. In the event a wire is not used for each of the 12 pins on the control, a Deutsch 114017 plug should be used in place of each missing wire to environmentally seal the connector from the elements. A wiring harness stress relief within 16 inches (406 mm) of the control's connector is recommended. The maximum recommended harness length is 20 feet (6 m). Dress the harness with wire loom to contain it in a single bundle. Use grommets when passing the harness through metal panels. Ground the MPU signal wire shielding at the control, but do not ground the MPU signal wire shielding at the MPU.

When using the ignition signal as the speed input, connect a two inch (51 mm) insulated 18 AWG (1 mm²) wire between pins 3 and 11 (MPU+ and MPU-) of the 12 pin Deutsch connector.

Also use twisted pair, shielded wires for the AUX1 input when configured for Isoch Load Sharing, 0–5 Vdc Remote Speed Setting, or MAP Fuel Limiting. Ground this shielding on the engine near the control.

Katolight Service - Master Repair Manual - Page 3138

Chapter 4.
Software Programming

This chapter covers the process of tuning, configuring, and servicing the control via the LCS Service Tool Software Suite. It is assumed that the control has already been installed on the engine.

The following hardware is required to work with the LCS control, regardless of whether an application is being developed by engineering, a configuration file is being downloaded in production, or the application is being serviced in the field:

- PC-compatible laptop or desktop computer* with at least one available serial communications port, and Windows 95/98/00/NT as the operating system.
- Programming/datalink harness (part number 02-0004-174) as shown in Figure 4-1.

***—CAUTION**

There is a potential for serial port damage when communicating with the LCS control. This is caused by a difference in ac voltage between neutral and earth ground. If the PC RS-232 port ground is referenced to ac neutral, and the LCS control is referenced to battery ground (ac earth ground), a large amount of current can be experienced. To avoid this situation, we strongly recommend placing an isolation transformer between the ac outlet and the PC.

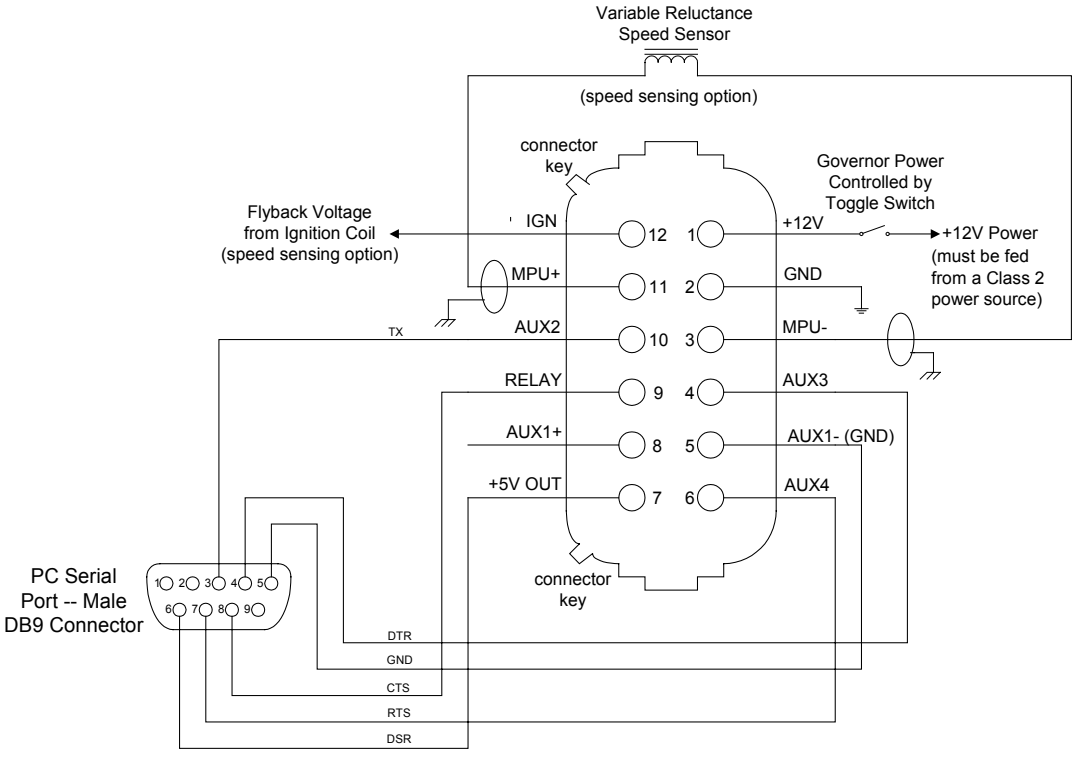

Pinouts Viewed Looking into Control Connector and Computer Connector

Figure 4-1. Typical Programming Datalink Harness Wiring

Katolight Service - Master Repair Manual - Page 3139

In addition to the hardware, the following are the distributions of tool software needed to communicate with the control:

- Woodward part number 9927-1000, LCS Service Tools, Dealer Distribution
- Woodward part number 9927-1000, LCS Service Tools, OEM Distribution (license Woodward part number 8928-5002)

The dealer distribution is required to update control dynamics and read out fault codes. The OEM distribution is required to configure, tune, and secure the control; it also includes the utilities from the dealer distribution.

Software Installation

The software tool is available for download form Woodward's website:

www.woodward.com/ic/software/software.cfm

Select the LCS Control from the pull-down menu. Then select GO. A new screen will appear with information about the product as well as installation instructions. To download the software, press the DOWNLOAD button.

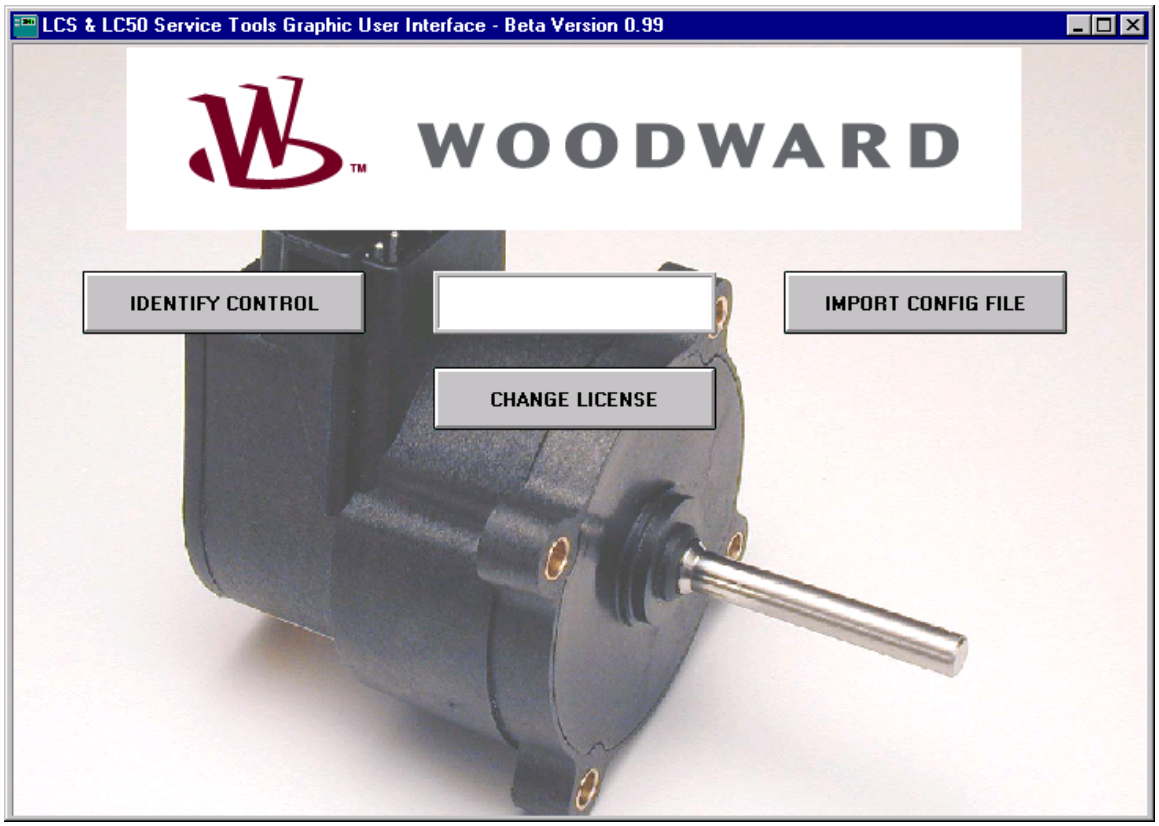

Before you can download, you will be prompted to log on to the Woodward site. If you have never downloaded Woodward software, you will have to complete a new registration.. Press this icon and fill out the information requested. If you have already registered, enter your e-mail address and press Login. The registration information is required so that we can alert you of updates to the software tools.

Katolight Service - Master Repair Manual - Page 3140

Once you have downloaded the software, double-click on the file (setupLCv1-0-A.exe) and follow the on-screen prompts. The defaults install is a dealer distribution in the default directory of LC-ctrl. To activate the OEM version, a license authorization must be obtained. This can be obtained from the same website.

You will need a serial number (obtained from your account manager) and a site code (obtained by pressing Change License) on the LC Control Software.

This is the first screen that appears when the GUI is initialized. To use the GUI Service tools, the user must have either an LCS with a supported firmware revision or the user must have access to a valid configuration file. This feature can also be used to identify the firmware revision of a particular configuration file.

The GUI supports several firmware revisions. The dialog box in the center of the screen will indicate "LCS B/C", "LCS D", "LC-50G", or "LC-50I" configuration format will be used. This manual covers the LC-50G and LC-50I versions. If your system comes up as B/C or D configuration format, contact Woodward for the appropriate manuals.

- **IDENTIFY CONTROL**—Identifies which version of firmware an LCS has. This requires that an LCS be connected to your laptop with a programming harness.
- **IMPORT CONFIG FILE**—Opens an existing config file. Select the desired file using the browser (config files use a *.lcs extension). Template files are available to get started.

Once a valid file or valid LCS has been identified, the screen below is displayed. The box in the center of the screen identifies which version of LCS is being used.

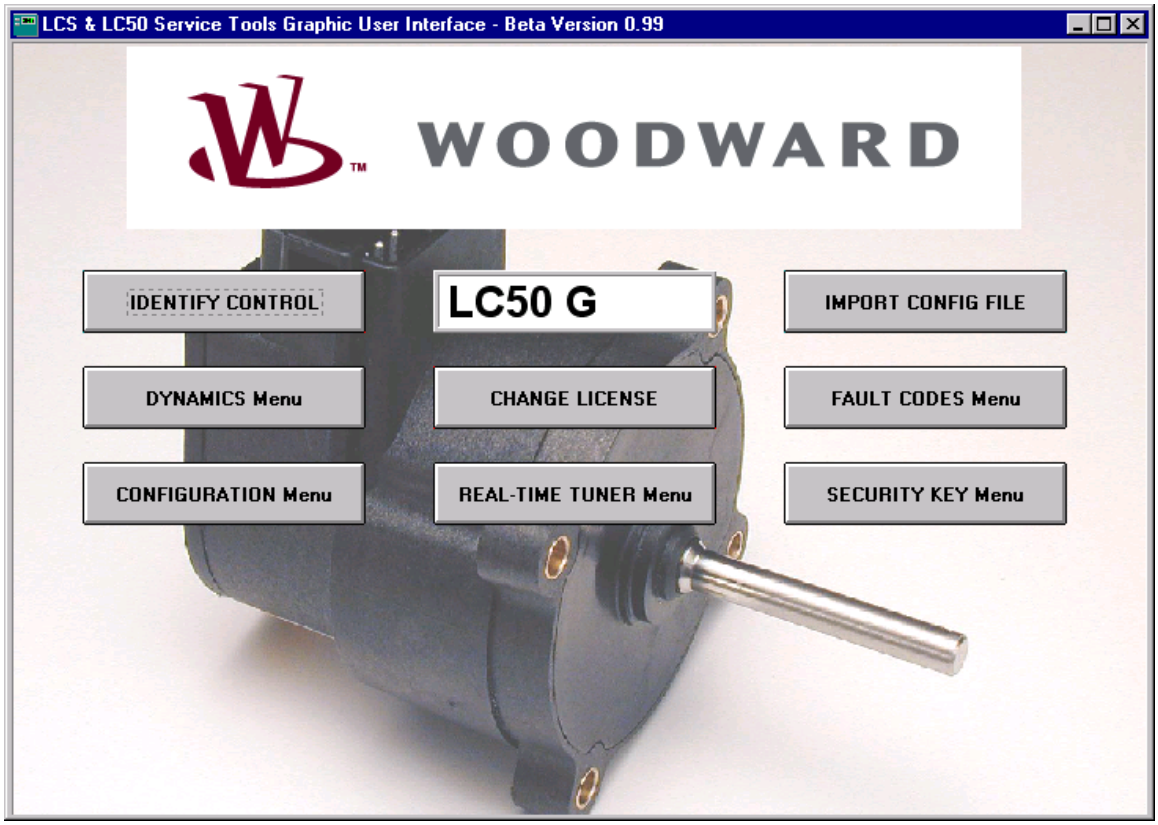

OEM Version of Main Screen

Katolight Service - Master Repair Manual - Page 3141

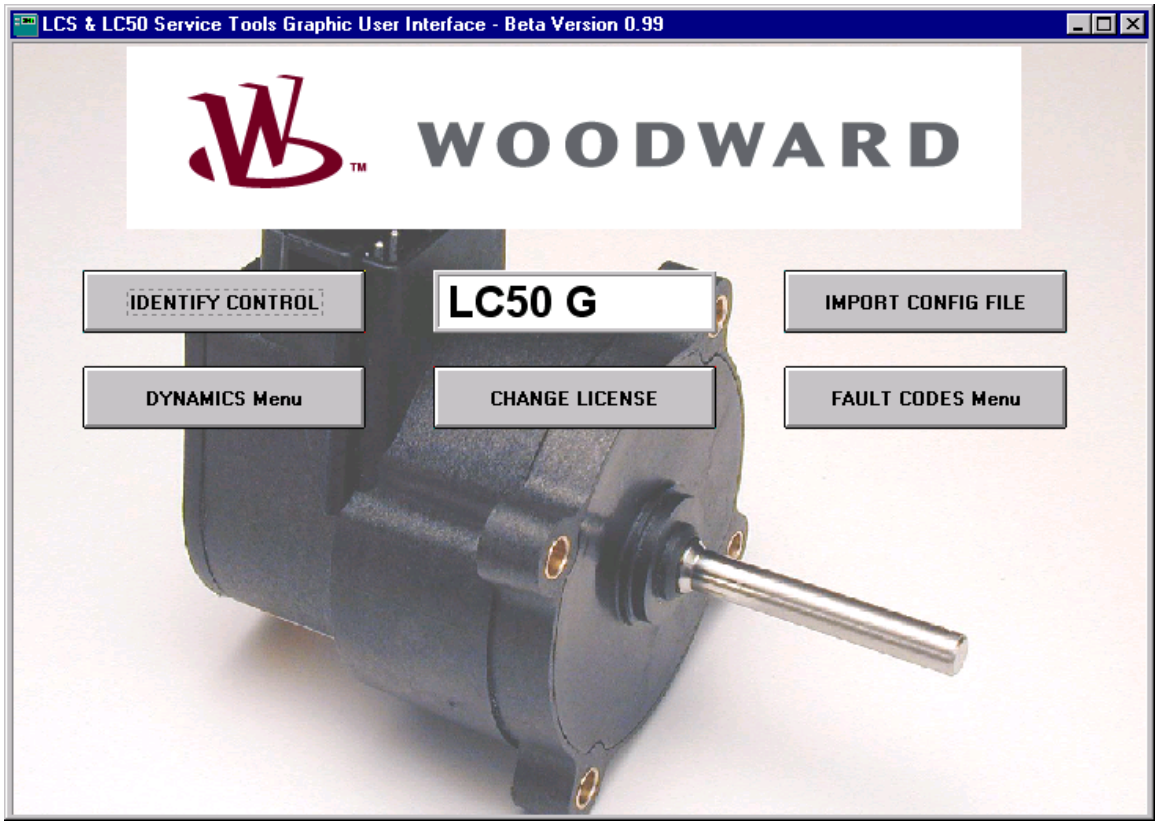

Dealer Version of Main Screen

CONFIGURATION Menu—Gives the user access to the configuration file handling options: edit config file, write to an LCS, read from an LCS, etc.
REAL-TIME TUNER Menu—Gives a user access to critical speed, dynamics, and position information for tuning. Both GAIN and Engine RPM can be monitored automatically by asserting the respective button. All data items must be read or written to by the GET and SET buttons, respectively.
SECURITY KEY Menu—Creates a security password and associated key to prevent other OEMs from viewing your *.lcs file.
FAULT CODES Menu—Fault codes can be viewed and reset from this menu.
DYNAMICS Menu—Provides access to a subset of the config file for dealers or field service.

Katolight Service - Master Repair Manual - Page 3142

Working with Configuration Files

This is the menu that is displayed when the CONFIGURATION Menu button is pressed. Six options are available. After the configuration file or LCS has been validated, its data is loaded into GUI's memory.

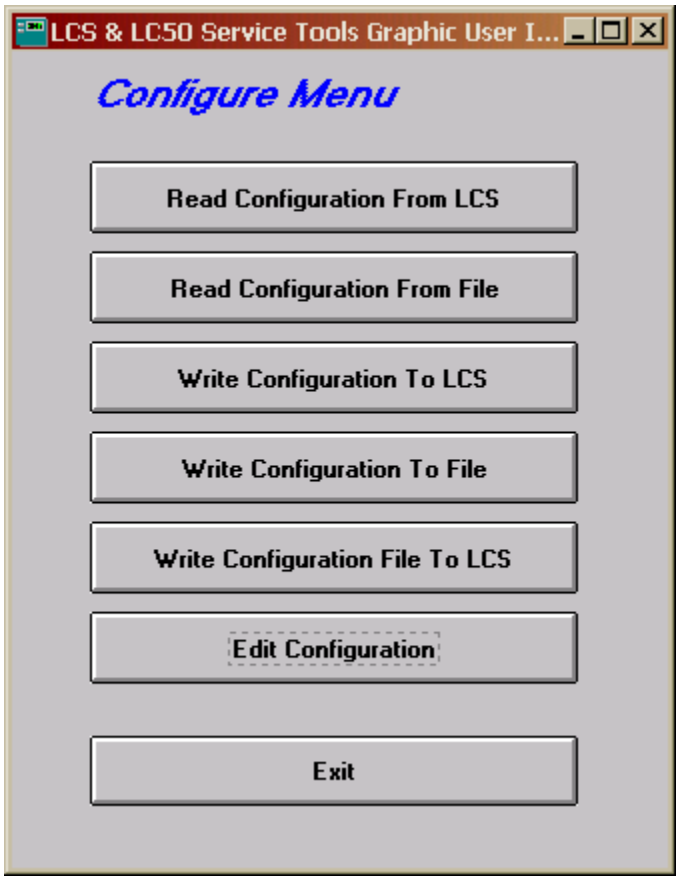

Read Configuration From LCS: Loads the config file from a LCS to the GUI. This requires that an LCS be connected to the computer through a programming harness. When you select this option, you will be asked to turn power on to the controller. Power is controlled by a toggle switch in the programming harness (see beginning of chapter for harness description).
Read Configuration From a File: Opens a Windows browser and allows the user to open an existing *.lcs file.
Write Configuration To LCS: Writes the active config file stored in the GUI to the LCS EEPROM. This requires an LCS be connected to the computer through a programming harness. When you select this option, you will be asked to turn power on to the controller. Power is controlled by a toggle switch in the programming harness (see beginning of chapter for harness description).
Write Configuration To File: Saves the active config file stored in the GUI to the location of your choosing.
Write Configuration File To LCS: Writes configuration file from hard drive or disk to the LCS.
Edit Configuration: Presents the LCS configuration file in a graphical format.
Exit: Returns to the main menu.

Katolight Service - Master Repair Manual - Page 3143

EDIT Configuration—Screen 1

On all screens numerical values can be entered by directly typing them in the field, or by pressing the up and down arrows to increase or decrease the value.

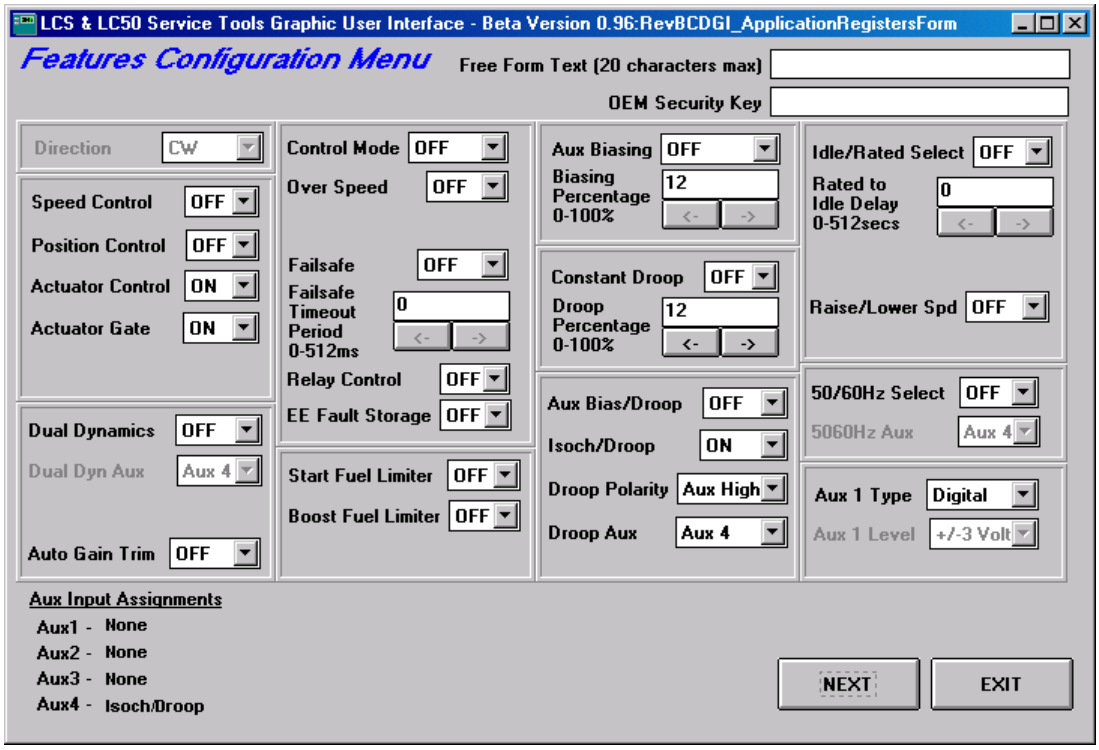

Features Configuration Menu—Generator Version

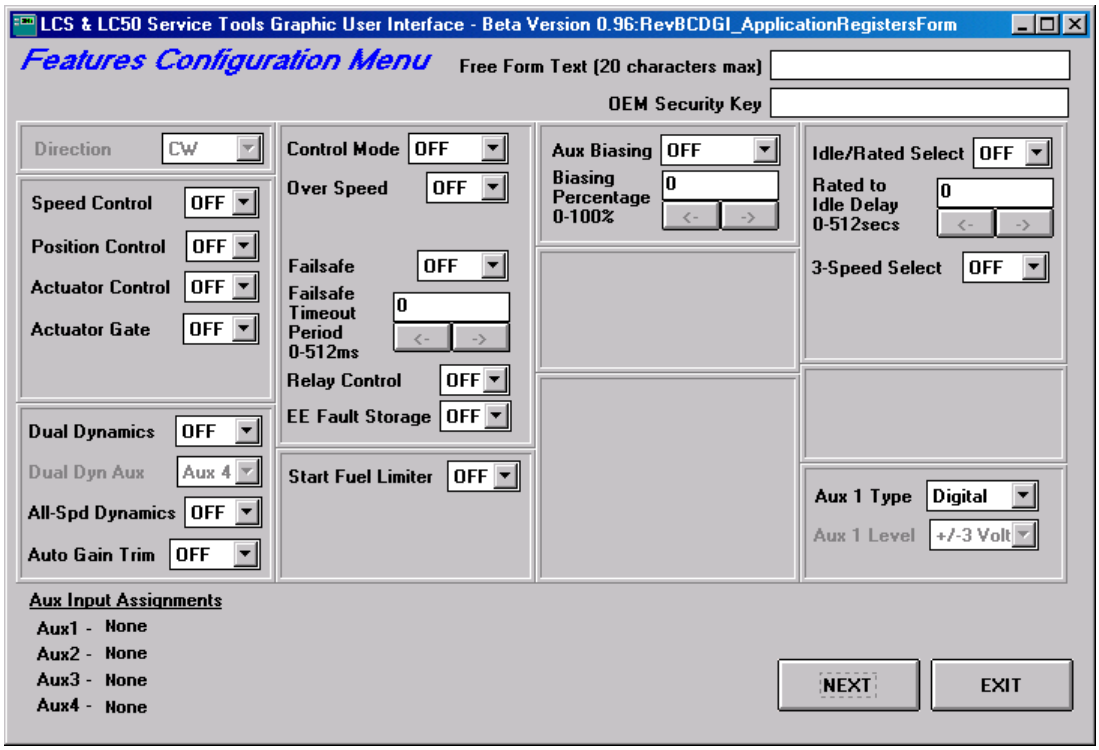

Features Configuration Menu—Industrial Version

Katolight Service - Master Repair Manual - Page 3144

This first screen allows the user to select the options to be enabled. See the Controller Features Description section of Chapter 2 for detailed explanations of each of the features.

The Free Form Text box allows the user to have a unique description for each configuration file. This text is stored in non-volatile EEPROM for future identification.

The OEM Security Key box is where the password is entered, if desired.

A feature is enabled or disabled by selecting ON or OFF from the pull down menu next to that feature.

For features that can be programmed to come in on a choice of multiple pins, a status of each AUX input is displayed on the lower left of the screen. If the user tries to put two features on the same AUX input, the status area will indicate that with red text and the words CONFLICT Exists.

If a feature is not turned on, the associated parameters cannot be edited. For example, if Droop is not turned on, the dialog box underneath asking for a droop percentage, cannot be edited.

EDIT Configuration—Screen 2

When you press NEXT from the FEATURES CONFIGURATION Menu, the DYNAMICS Menu appears.

This is where the engine governing speed control gains are configured. If the LCS is being used as a positioner, no information is needed on this screen.

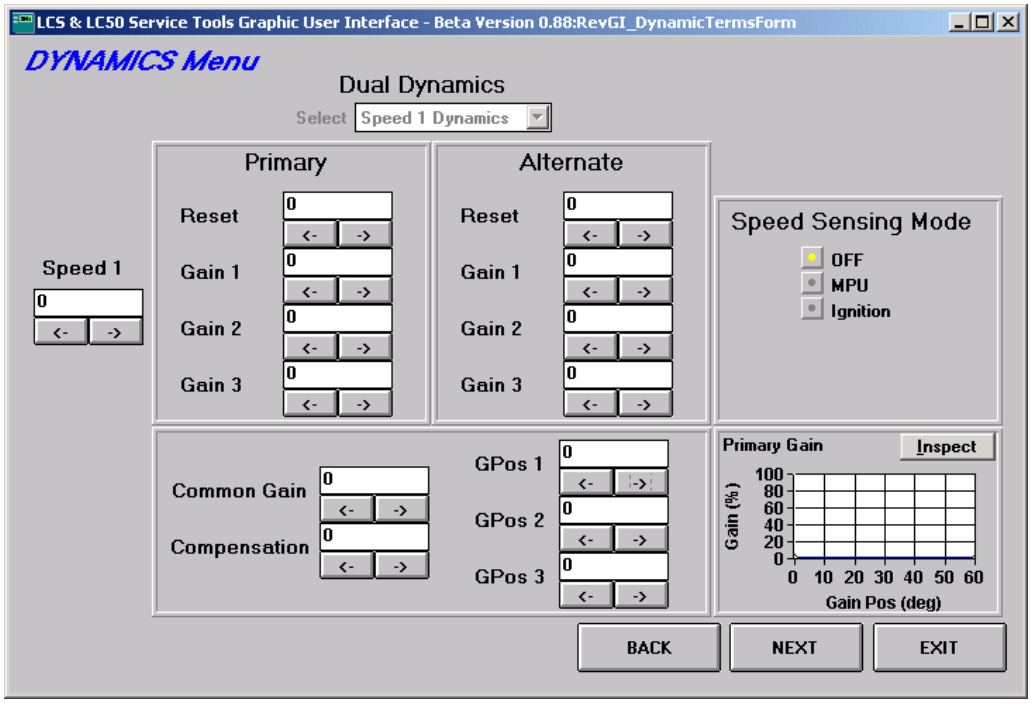

Dynamics Menu—Generator & Industrial Versions

If the LCS is being used as a governor, then the control dynamics, speed sensing, and speed settings will be entered on this screen.

Primary and alternate refer to the dual dynamics function. If the dual dynamics option was selected on the first screen, then values should be entered for both primary and alternate gains.

Speed 1 box on the left is the primary speed setting. If 50/60 Hz, idle/rated, or three-speed was selected, the pull-down menu at the top of the screen becomes accessible. This allows you to enter the speed settings and dynamics for the various functions.

Common gain, compensation, GPOS1, GPOS2, GPOS3 are common for all speed settings and both primary and alternate dynamics.

The graph on the bottom right will show a plot of the primary dynamics for the speed setting reflected in the speed select box.

The speed sensing mode is also defined here. If MPU is selected, an option drops down for number of flywheel teeth. If ignition is selected, drop down menus appear requesting inputs for number of cylinders and type of engine.

Katolight Service - Master Repair Manual - Page 3146

EDIT Configuration—Screen 3

The third screen in the configuration file editor is the positioner screen. The proportional, integral, and derivative terms control the response of the throttle blade. Typical values for throttle body applications are: proportional = 25 to 40, integral = 15 to 25, derivative = 0 to 30.

No load and full-load actuator positions are used by the droop function. If droop is not being used, no information is needed here.

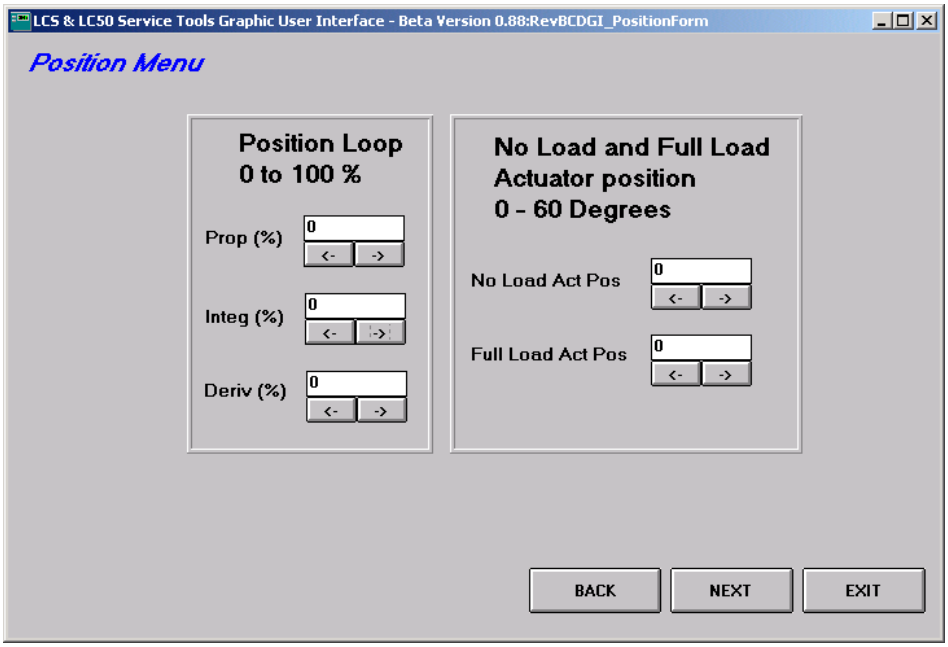

Position Menu—Generator Version

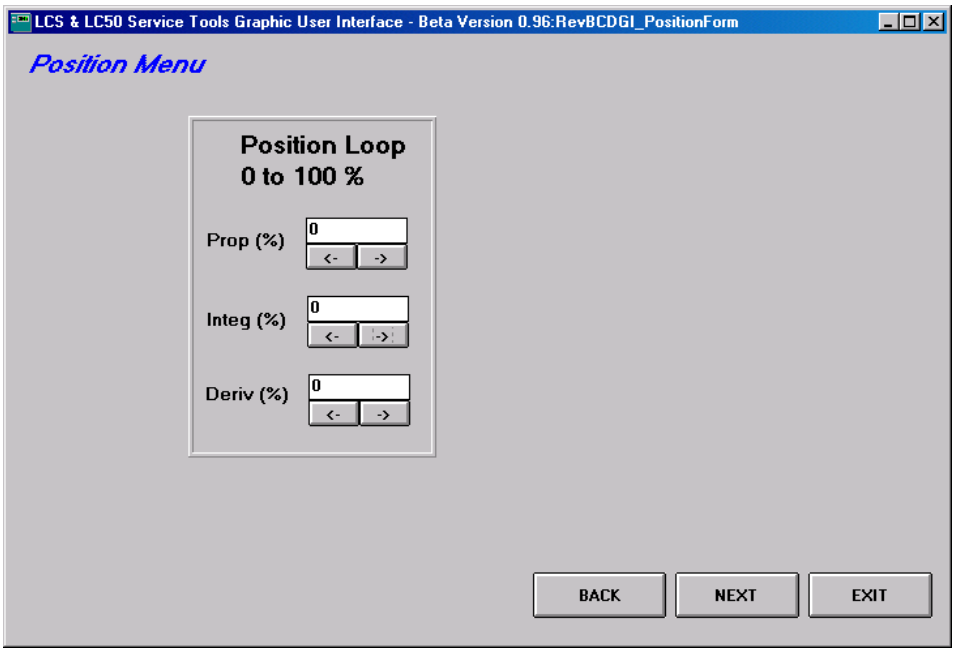

Position Menu—Industrial Version

Katolight Service - Master Repair Manual - Page 3147

EDIT Configuration—Screen 4

The Fuel Parameters Menu is the fourth screen. This screen is where the fuel limiting parameters are entered. If start fuel limiting and boost fuel limiting are not being used, this screen can be skipped.

If start fuel limiting is being used, enter the actuator position limit on this screen. The RPM threshold is entered on the next screen.

If boost fuel limiting is being used, enter the parameters here. These points act as a three-point curve, with linear interpolation between points.

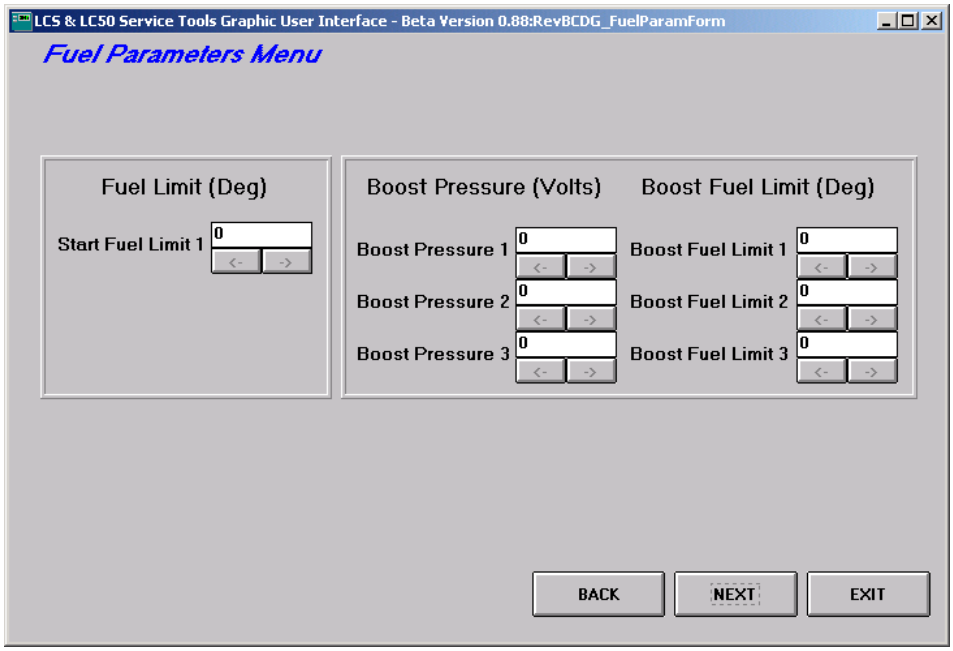

Fuel Parameters Menu—Generator Version

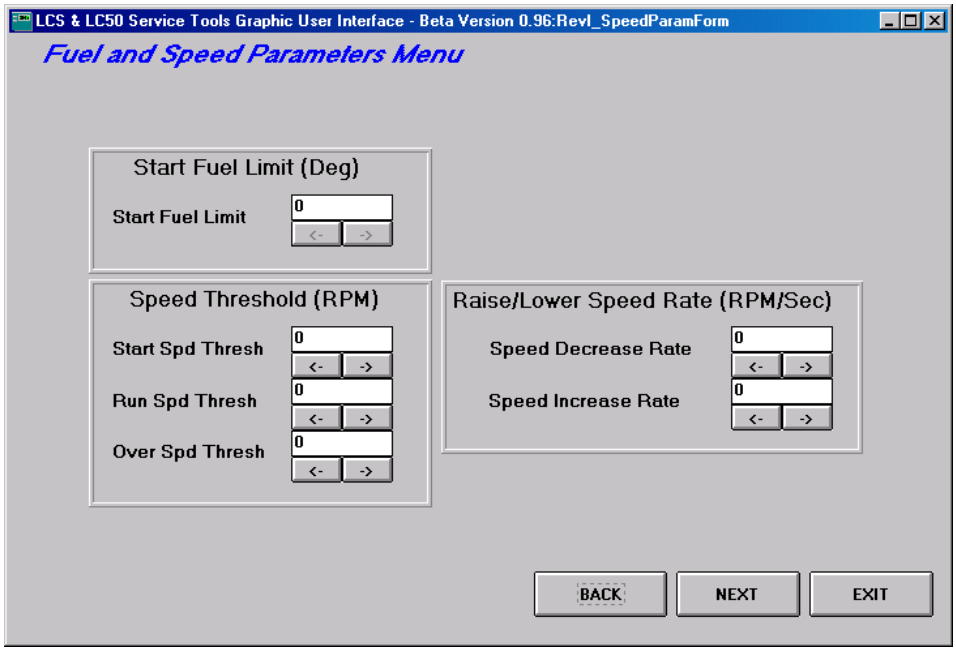

Fuel Parameters Menu—Industrial Version

Katolight Service - Master Repair Manual - Page 3148

EDIT Configuration—Screen 5

The fifth screen presents the Speed Parameters Menu. The start speed threshold, run speed threshold, and overspeed threshold are entered here.

If the raise/lower function has been enabled, enter the ramp rates in speed decrease rate and speed increase rate. The upper and lower limits for the raise/lower function are also entered here. The ramp rates are also used by the idle/rated function and the three-speed function. The speed will transition between the various set speeds at these rates.

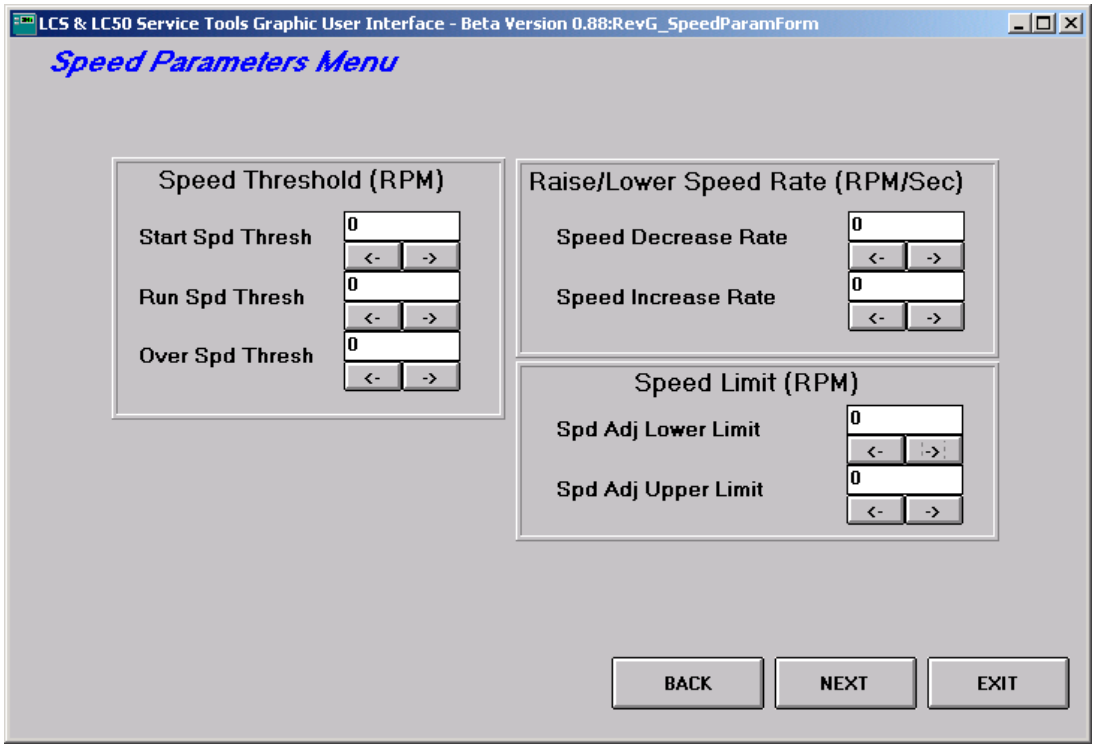

Speed Parameters Menu—Generator Version

Katolight Service - Master Repair Manual - Page 3149

EDIT Configuration—Screen 6

This is the final screen in the EDIT Configuration Menu. This screen is where the auto gain parameters are entered. The GAIN DECREMENT and GAIN INCREMENT indicate how much the gain should be altered when the system is determined to be unstable. Minimum Gain and Maximum Gain are the limits for any changes in the gain. Steady State (rpm) and Transient (rpm) are the windows to determine instability. If the system is operating in a steady state mode, then if the RPM varies by more than this amount the gain will be decremented by the amount indicated in Gain Decrement. Likewise, during a transient event, if the RPM varies outside the transient RPM window, the control will increment gain.

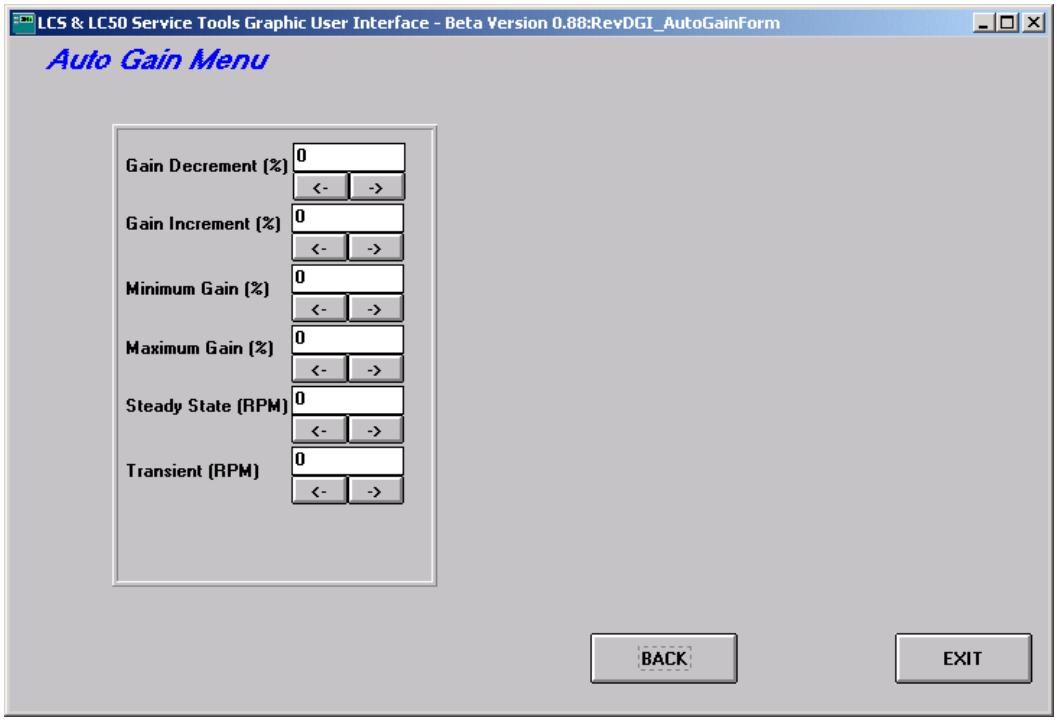

Katolight Service - Master Repair Manual - Page 3150

Real-Time Tuner

The OEM utility REAL-TIME TUNER is designed to give application engineers the ability to tune an LCS control's actuator position control loop and engine speed control loop.

The program initializes the control for real-time communications while the main control loops are executing. Because the real-time tuning software uses AUX2, AUX3, AUX4, and the relay output to communicate, no auxiliary product features can be enabled. Use of this feature requires an LCS be connected to the computer through a programming harness. When you select this option, you will be asked to turn power on to the controller. Power is controlled by a toggle switch in the programming harness (see beginning of chapter for harness description).

Examples of how this tool is used are contained in the sections of this manual dealing with actuator tuning and engine tuning.

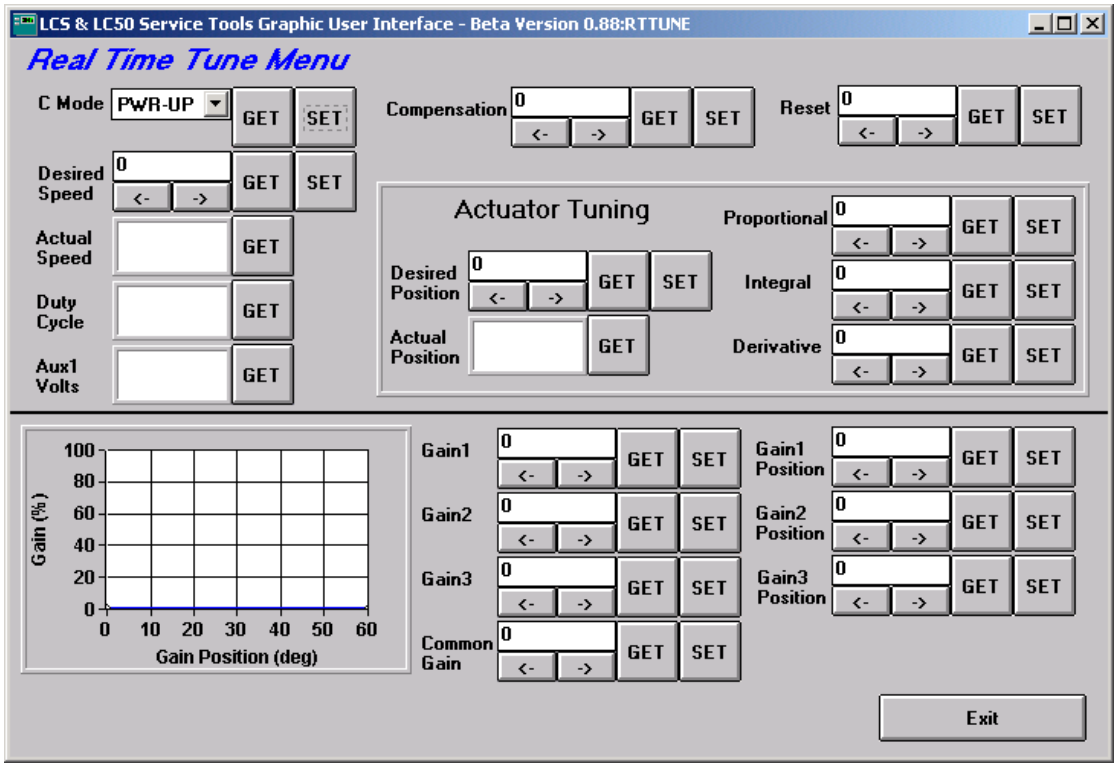

Katolight Service - Master Repair Manual - Page 3151

Working with Security Keys

If an OEM decides to make use of the password protection feature, this is where the password is entered and the associated key is created. This screen is accessed from the Main menu by pressing Security Key Menu. Enter the password you would like to use in the text input box. Then press the Make Key button. A file called “access.key” is created that must then be present in the working directory any time you attempt to communicate with the LCS.



Viewing and Resetting Fault Codes

VIEW Fault Codes

To view the contents of a control’s fault register, press the VIEW FAULT CODES button located in the FAULT CODES Menu.

The program will display which of the error bits are set within the register (configuration error, overspeed error, or failsafe error). A configuration error is the result of not downloading a configuration file into a new control. Overspeed, and failsafe errors all relate to issues with the MPU or connection to an ignition system. The underspeed fault does not apply to the LC50 ITB versions of the LCS.

Katolight Service - Master Repair Manual - Page 3152

RESET Fault Codes

To clear the contents of the control fault register, press the RESET FAULT CODES button. The program will reset the state of all error bits.

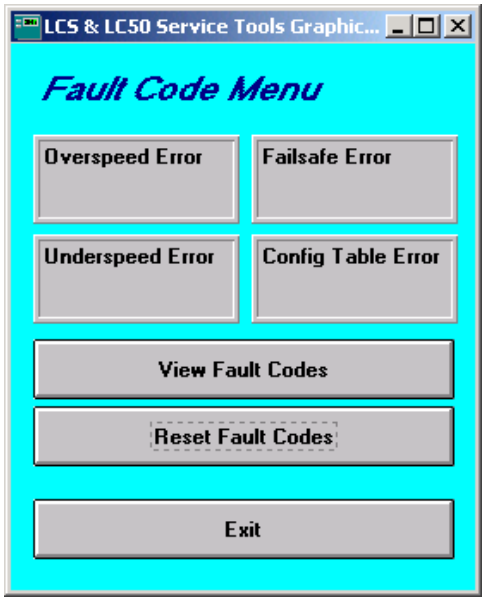

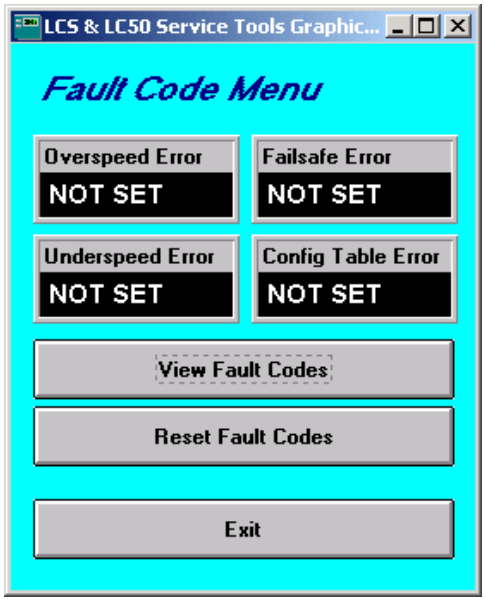

Messages
In working with the LCS, the power must be cycled from time to time. The user will be prompted to turn power on or off. If the power is not cycled in 10 seconds, a message will appear which allows a retry or the cancellation of the current activity.

Dynamics Menu

This is the menu displayed after pressing Dynamics menu. It allows access to a subset of the entire configuration file. Dealers or field service personnel can access all of the dynamics associated with the controller including: primary and alternate reset, gain 1, gain 2, gain 3, and compensation for all speeds.

Read Dynamics From LCS—Loads the dynamics file from a LCS to the GUI. This requires that an LCS be connected to the computer through a programming harness. When you select this option, you will be asked to turn power on to the controller. Power is controlled by a toggle switch in the programming harness.
Read Dynamics From File—Opens a Windows browser and allows the user to open an existing *.dyn file
Write Dynamics To LCS—Writes the active dynamics file stored in the GUI to the LCS controller. This requires that an LCS be connected to the computer through a programming harness. When you select this option, you will be asked to turn power on to the controller. Power is controlled by a toggle switch in the programming harness.

Katolight Service - Master Repair Manual - Page 3153

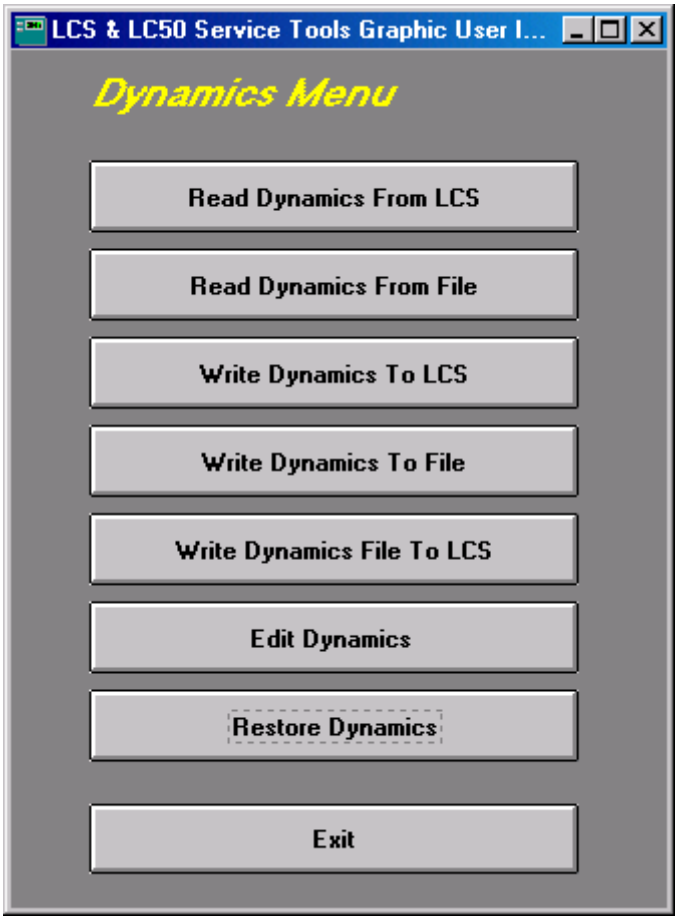

Write Dynamics To File—Saves the active dynamics file stored in the GUI to the location of your choosing.
Write Dynamics File To LCS—Writes a dynamics file from the hard drive or disk to the LCS.
Edit Dynamics—Presents the LCS dynamics file in a graphical format for editing.
Restore Dynamics—Restores the original OEM settings. If a user writes dynamics changes to the LCS and decides that they are not effective, pressing restore will copy the original settings from backup memory area on the controller.
Exit

Katolight Service - Master Repair Manual - Page 3154

When Edit Dynamics is pressed, the following screen is displayed.

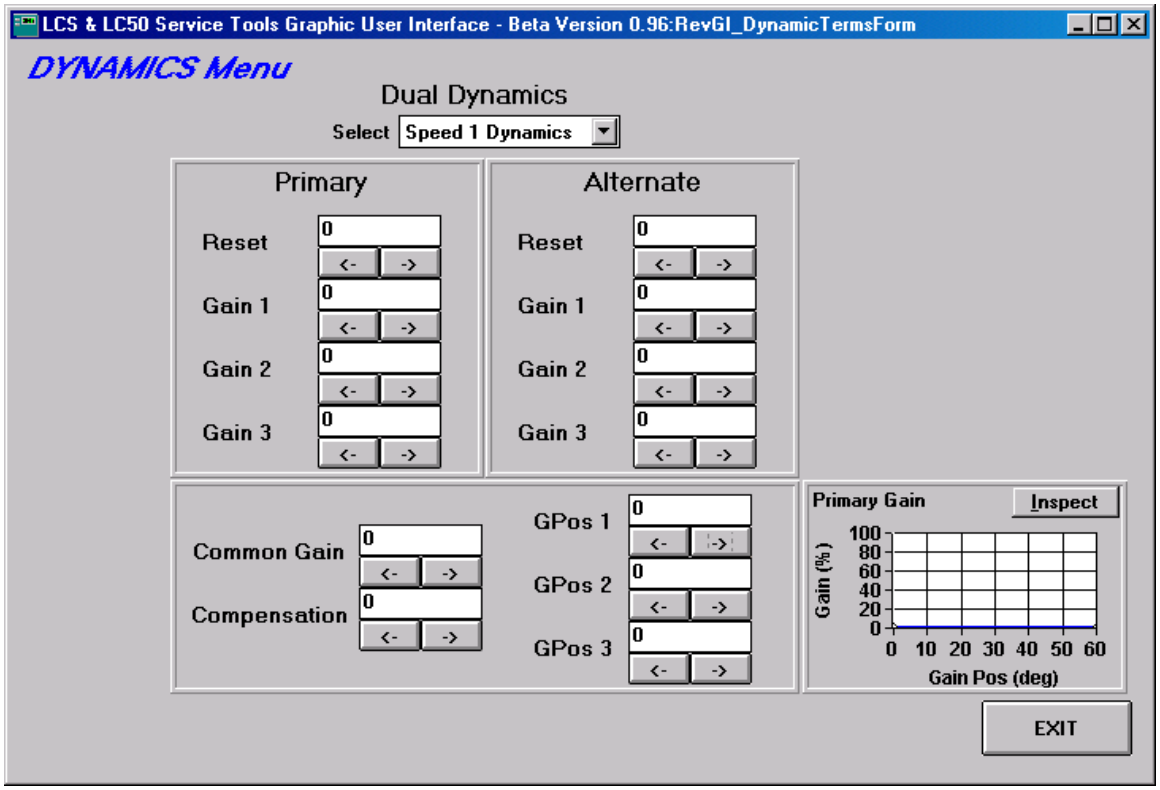

Controller Tuning

Before continuing, the OEM should already have in mind which speed setting, speed biasing, speed sensing, alternate dynamics, fuel limiting, and support logic features should be enabled. For more information on the features available, see the Features Description section of Chapter 2.

Initial File Construction

An initial configuration file must be created for every application. This file can either be created from scratch or an existing file can be modified. The steps below outline how to create the initial file.

1. Start the GUI program by selecting it from the Windows Start Programs menu.
2. Select IMPORT CONFIG FILE.
3. An existing config file can be used if the application is similar to one already developed. If this is the case, choose Config files from the file type drop down and then select the appropriate file from the Windows browser. If this is a new application, a template file can be opened. Select Template files from the drop down menu and then select the template that matches your version of LCS controller.

Katolight Service - Master Repair Manual - Page 3155

4. Select the file by double-clicking on it, or single-clicking and then pressing OPEN.
5. Once the file is opened, you are returned to the MAIN Menu.
6. To edit the configuration file, press the CONFIGURATION Menu button.
7. Then press the EDIT Configuration button.
8. You are taken to the first screen of the Configuration Menu. In this screen select the features you have determined you would like enabled.
9. If inputs are selected on the AUX pins, the bottom left of the screen indicates which inputs are associated with the AUX inputs. If a conflict exists, the text will turn red. Make sure that all inputs are coming in on a unique Aux input before continuing.

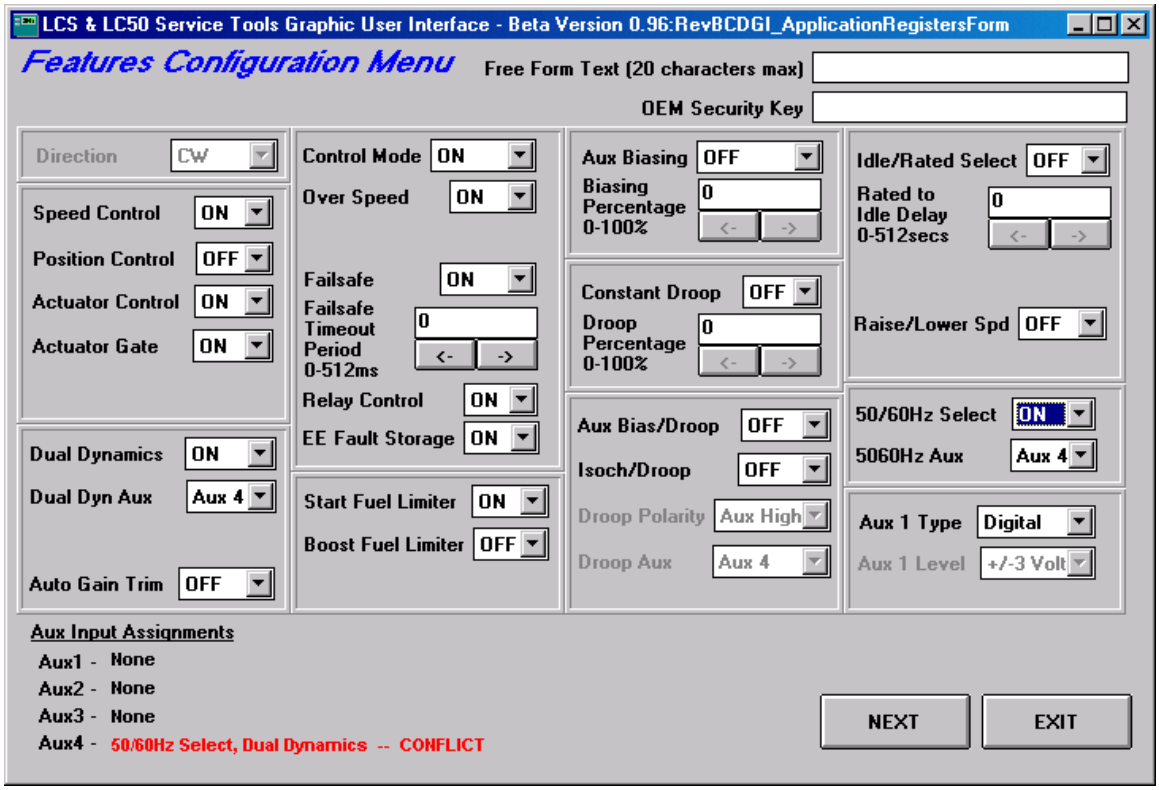

AUX Input Assignment Conflict Designation

10. For initial tuning, the AUTO-GAIN feature should be turned off.

Katolight Service - Master Repair Manual - Page 3156

11. When all the features are selected press NEXT.

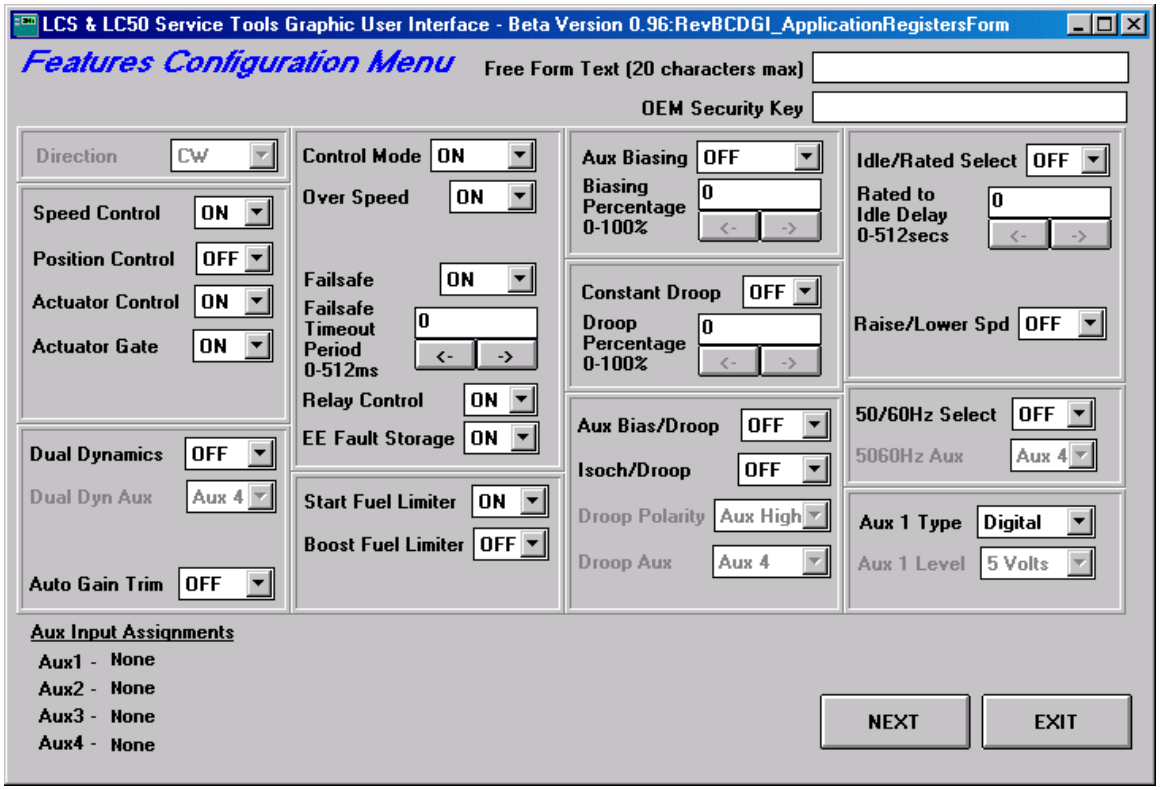

Initial Speed Governor Feature Settings

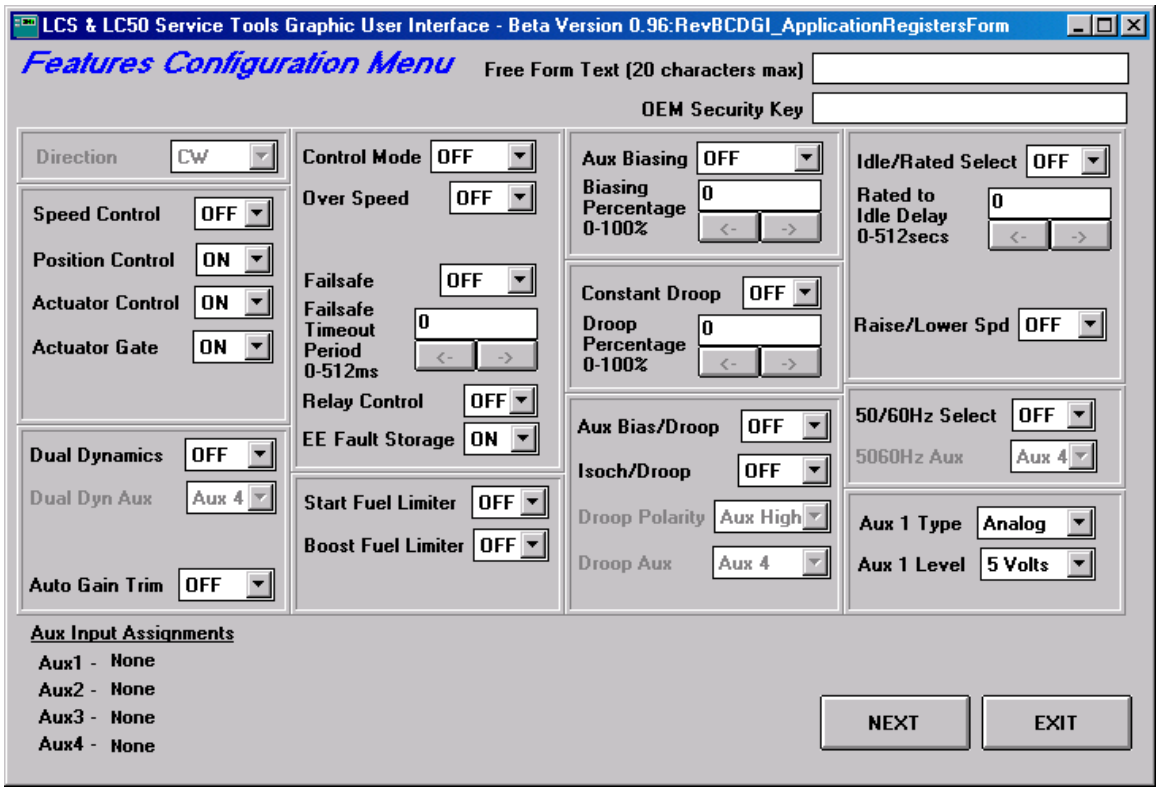

Initial Positioner Settings

12. The next screen asks for dynamics information. If this is a new application, reset, compensation, and gain can all be set to the values shown initially. A common gain setting of 20 will give steady speed control for initial start-up and air/fuel ratio tuning. The controller may not respond will to large transients however. If this is for a positioner application, the values on this screen will be ignored.

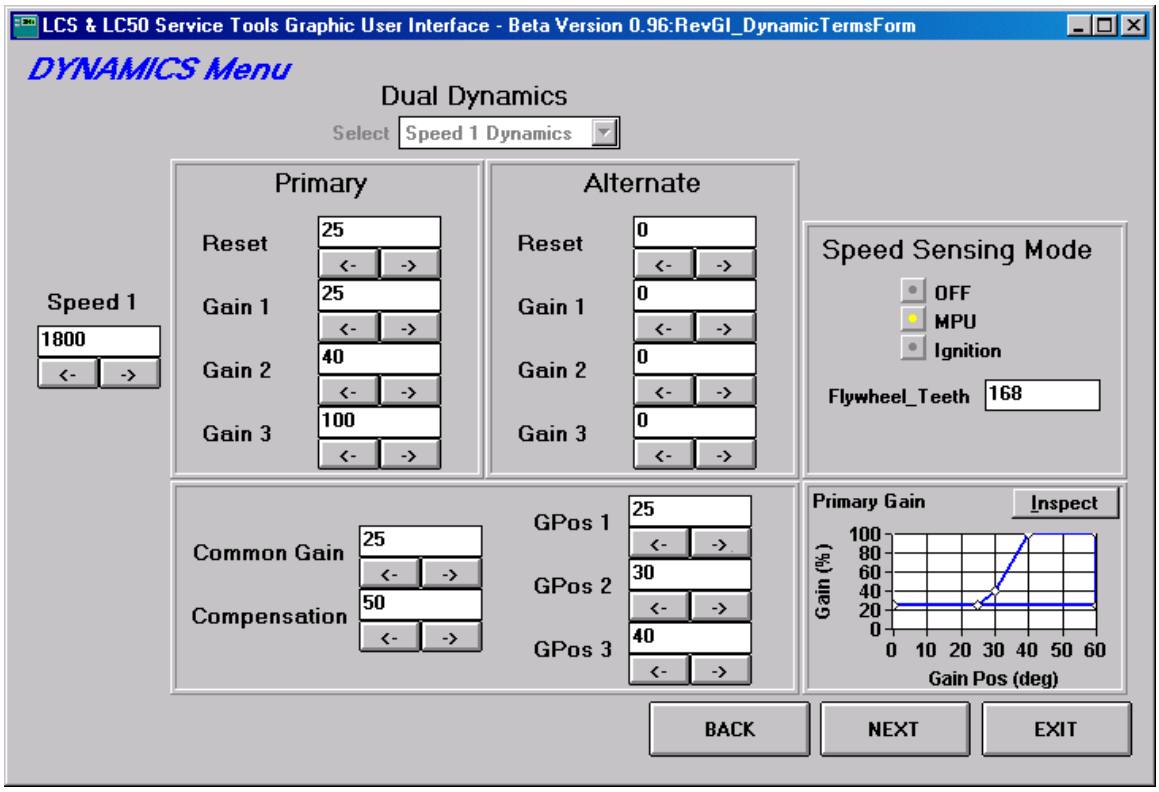

Initial Dynamics Settings for Speed Governor Applications

13. The appropriate speed setting should be entered on this screen.
14. The speed sensing mode is also entered here.
15. After entering these values, press NEXT.

16. The POSITION Menu is displayed. Appropriate initial values for the PID terms are: proportional = 35, integral = 10, derivative = 0.

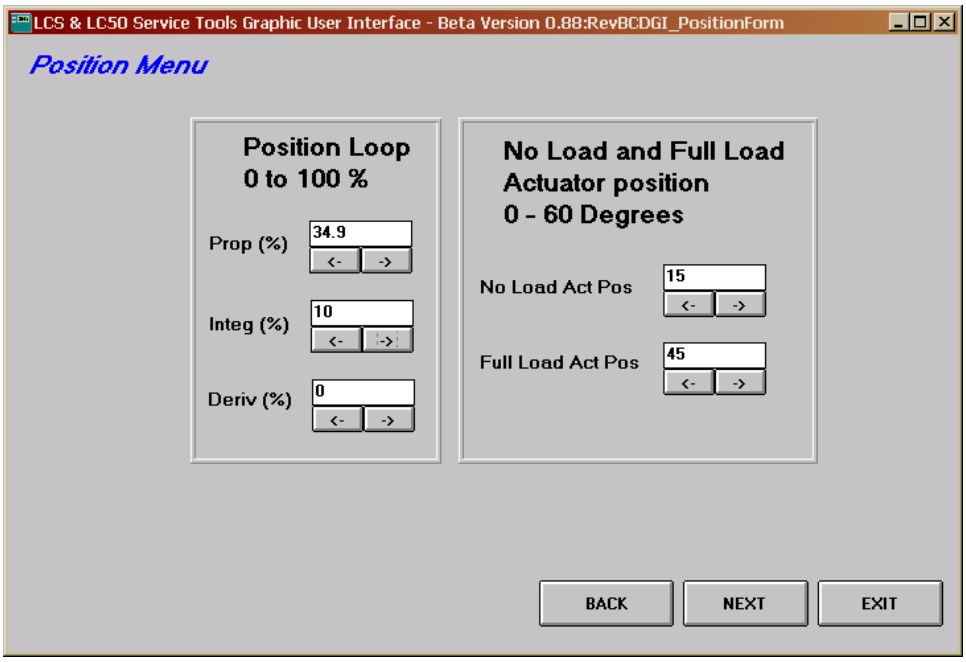

Typical Speed Governor and Positioner Values

17. If droop is being used, full-load and no-load actuator positions will need to be determined and entered here. (This can be after initial tuning.) Typical values are approximately 15° at no load and 50° at full load.
18. Press NEXT.
19. The FUEL PARAMETERS Menus is displayed. Enter any desired values here. The start fuel limit will help to avoid over-speed on start-up. Typical values are 20° to 30°. Boost fuel limit function is discussed in Chapter 2.

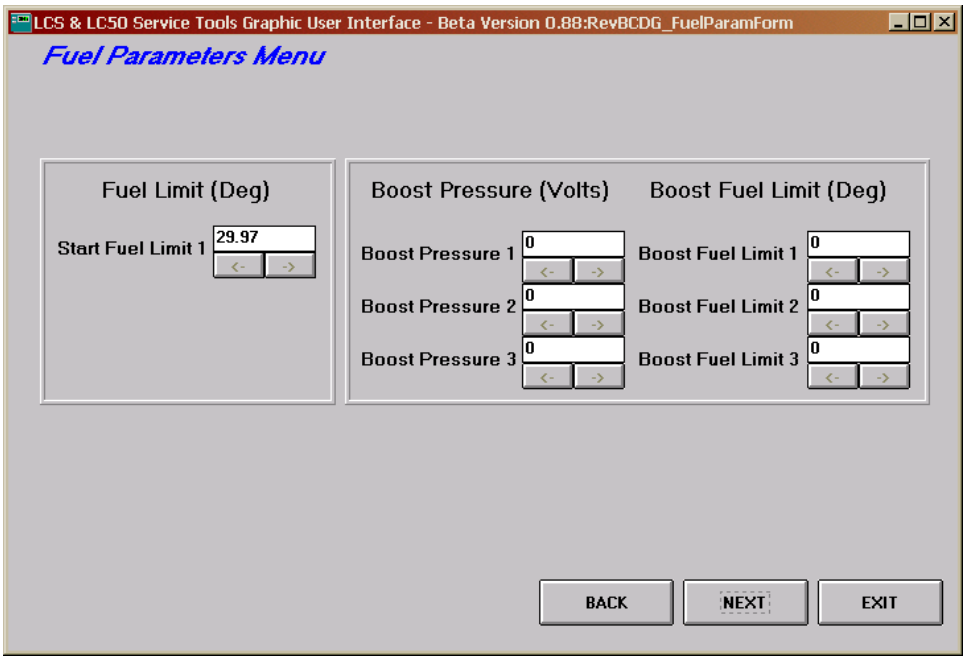

Katolight Service - Master Repair Manual - Page 3159

20. Press NEXT.
21. The SPEED PARAMETERS Menus is displayed. Enter start speed threshold, run speed threshold, and overspeed threshold here. Also enter any desired raise/lower values here.

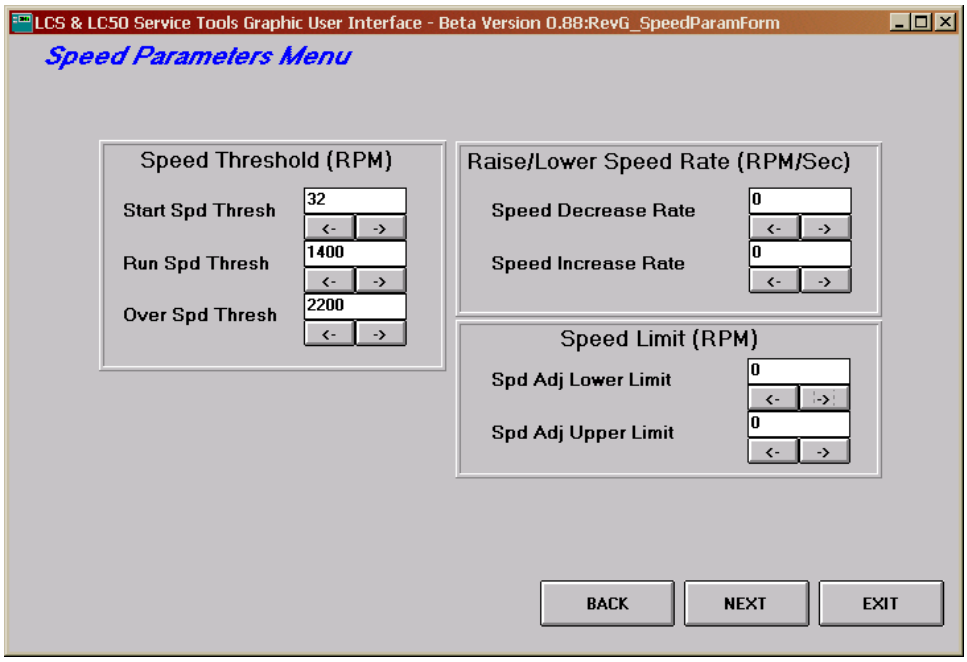

22. Press NEXT.
23. The AUTO-GAIN parameters Menu is displayed. This feature should be turned off for initial tuning. So, these values should be zero.

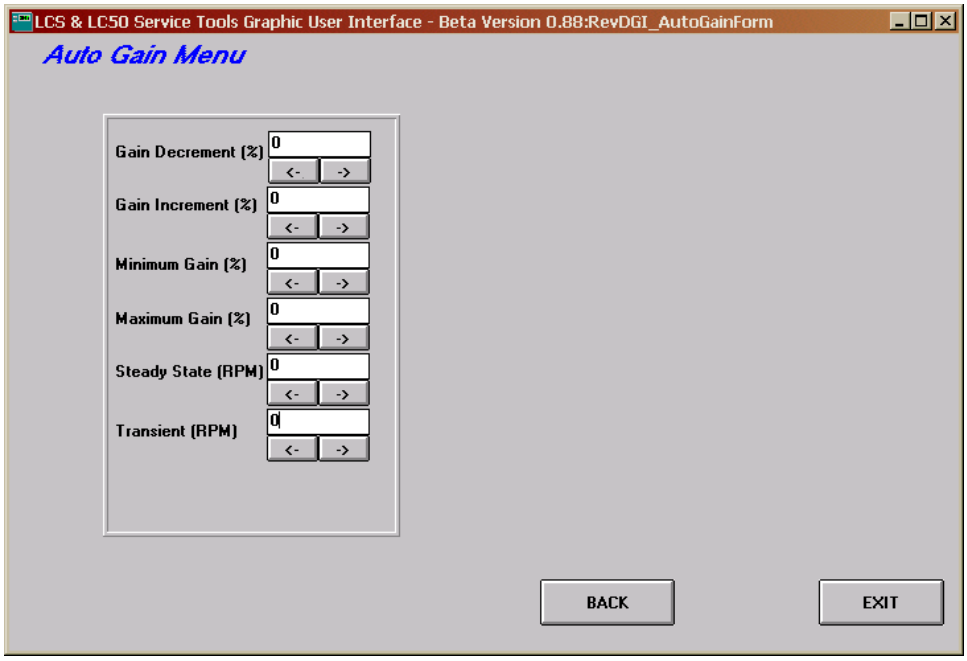

Katolight Service - Master Repair Manual - Page 3160

24. Press EXIT.
25. You are returned to the Main Menu. Press Write Configuration To File to save your initial configuration file to a file. Press Write Configuration To LCS to write the file to the controller and begin tuning.

LC-50 Applications (Mixer Applications)

After the initial program is configured, the air/fuel ratio should be optimized before extensive engine speed governor tuning is done. Start with low gain values and step slowly through load changes until the air/fuel ratio is tuned.

Initial settings are described in the hardware installation section of the INSTALLATION chapter. These settings should get the gensets up and running for final adjustment with an oxygen sensor or exhaust analyzer.



WARNING
Know in advance how to safely shut off the engine during normal and emergency stop conditions. Shutting off power to the governor does not always guarantee a controlled shutdown; it depends on the final application. Safety needs to be the overriding thought during this procedure.

Air/Fuel Ratio Tuning

1. Insert an oxygen sensor or exhaust gas analyzer into the exhaust stream as directed by the manufacturer of the sensor or analyzer.
2. Ensure a configuration file has been downloaded into the LCS controller (See initial configuration file section.)
3. With LCS power off, press **Start Real Time Tuner Menu** and turn power on.
4. Start the engine.
5. If the engine overspeeds and shuts down, perform the following
   - Exit Real Time Tuner Menu
   - Remove power from the control.
   - Go to the EDIT Configuration Menu, then go to screen 4, and adjust the start fuel limit to a lower value.
   - Repeat steps 3 through 5.
6. Start the engine and allow it to warm up for about 15 minutes.
7. Apply 75% to 90% load to the engine. With initial, low gain values in the speed control loop, the load may need to be applied gradually to avoid under and overspeed conditions.
8. Adjust the MAS to achieve the desired air/fuel ratio. Figures below show characteristic response of oxygen sensors and exhaust gas. Clockwise rotation of the MAS will cause the air/fuel ratio to become more lean. Counter-clockwise rotation will cause the air / fuel ratio to become more rich.

Katolight Service - Master Repair Manual - Page 3161

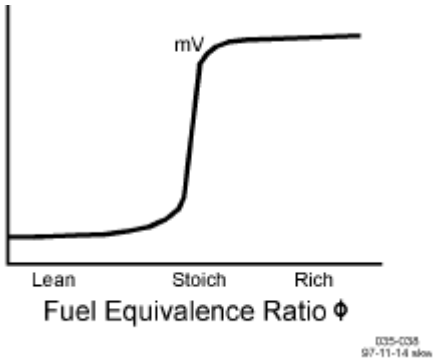

Figure 4-2. Zirconia Oxygen Sensor Response

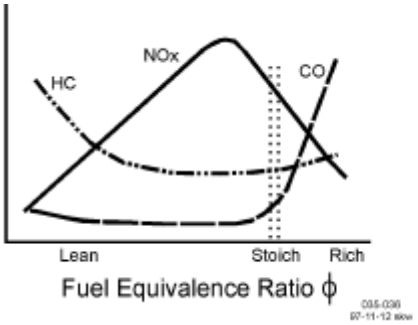

Figure 4-3. Pre-Catalyst Emissions

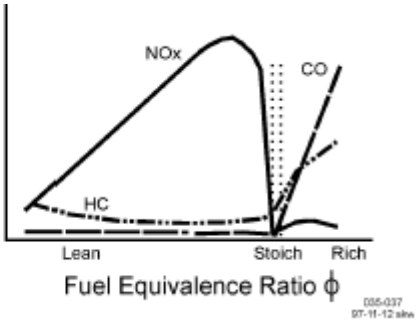

Figure 4-4. Post-Catalyst Emissions

9. The ZPR should then be adjusted at no-load. Clockwise rotation of the screw will cause the mixture to become richer, counter-clockwise rotation will cause the mixture to become leaner. When the cover is removed from the ZPR, extra air leakage is introduced into the system. So, a final setting cannot be determined until the ZPR spring tower is covered.
10. One or two more iterations at full load for the MAS and no load for the ZPR should provide the correct air/fuel ratio over the entire operating range.

Speed Governor Applications

WARNING
Know in advance how to safely shut off the engine during normal and emergency stop conditions. Shutting off power to the governor does not always guarantee a controlled shutdown; it depends on the final application. Safety needs to be the overriding thought during this procedure.

Speed governor applications require that the speed control loop be tuned for load transients and steady-state stability. Use this procedure to derive the values of the speed control coefficients (reset, gain, and compensation) for a fixed engine speed. The speed control coefficients are described below:

Katolight Service - Master Repair Manual - Page 3162

GAIN determines how fast the control responds to an error in speed when the speed reference is changed or a load disturbance occurs. A value too high will result in sustained, fast oscillations in speed. A value too small will result in poor control performance and possibly slower oscillations.

RESET prevents slow hunting at steady state and controls damping when speed error returns to zero after a speed disturbance. A value too high will result in large, low frequency oscillations in engine speed. The actuator will tend to "bang" from stop-to-stop. A value slightly too high is indicated by an over-damped condition, or the speed error returning too slowly to zero. A value slightly too low is indicated by an under-damped condition, or the speed value overshooting the reference and returning, possibly with several damped oscillations. A value too low will result in slow, low amplitude hunting of speed about the speed reference.

COMPENSATION term compensate for actuator lag. It adjusts the rate of change in actuator output when a load disturbance occurs. A value too low will result in slow and under-damped control. A value too high will result in excessive high frequency actuator movement.

Because the dynamics of an engine depends on its speed of operation, some of this tuning process must be repeated more than once. This procedure assumes the following:

- The LCS ITB or LC-50 is already installed on the application.
- A programming harness is connected between the LCS, computer, power source, and speed pickup.
- The OEM distribution of the service tools is already installed on the computer.
- The air/fuel ratio tuning has been done. Therefore, a valid configuration file is in the LCS.
- The generator is connected to a load bank with strip-chart recording capability.

1. With LCS power off, press Real Time Tuner Menu and turn power on.
2. Start the engine.
3. If the actuator is rapidly oscillating (> 5 Hz) around a position and the engine is making barking/chattering noises, lower the proportional term by 5% decrements until the oscillation stops. (Use the P-Term slider and SET button.)
4. If the actuator is limit cycling (~2 Hz) and the engine speed is oscillating along with it, lower the common gain term by 5% decrements until the limit cycling stabilizes. (Use the Common gain box and SET button.)
5. If the actuator is slowly hunting (< 0.5 Hz) and the engine speed is slowly hunting with it, increase the reset term by 5% increments until the hunt is minimized. Increasing the reset term too much will cause the actuator to start limit cycling. When the switchover from hunting to limit cycling occurs, reduce the reset term to eliminate the limit cycling.
6. If no good compromise can be found between hunting and limit cycling while adjusting the reset term, lower the gain term by 5% and repeat the adjustments on the reset term. Repeat lowering the gain if the reset adjustments fail to yield a stable engine.

Katolight Service - Master Repair Manual - Page 3163

7. Assuming the engine speed is fairly stable at this point, disturb the load on the engine (or the speed setting) slightly, and observe how the engine speed recovers. If the recovery has some ringing (oscillations with decreasing amplitude) to it, reduce the gain term and increase the reset term. Repeat the tap test until the recovery looks and sounds critically damped.
8. Attach a chart recorder to the engine to monitor its speed versus time.
9. Load and unload the engine in varying amounts. Observe the engine speed response on the chart recorder. Based on the shape of the response to changing load, change the reset and gain settings in one of three combinations as shown in Figure 4-5.

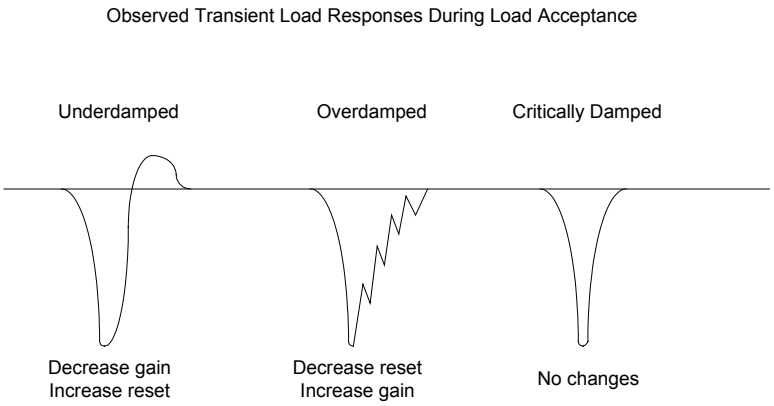

Figure 4-5. Recommended Control Setting Changes

10. The goal is to obtain the tightest possible critically damped response to load transients, at least initially. The gain term affects how quickly the governor reacts to a speed difference between the set point and the actual speed. The reset term affects the damping (or anticipation) of the governor. In general, the highest gain and lowest reset that still has good steady-state load stability will give the best transient response to large load changes.
11. When the governor and engine have been tuned optimally. Press EXIT. The following screen will appear. Press Yes and the changes will be saved to the current configuration parameters. The changes are not resident in the LCS at this time. As soon as you cycle power to the unit, the changes are erased from the controller's memory. To permanently change them, go to the Configuration Menu and Write Config File To LCS. It is also a good idea at this time to Write Config File To File, so that you have a record of the changes.

Katolight Service - Master Repair Manual - Page 3164

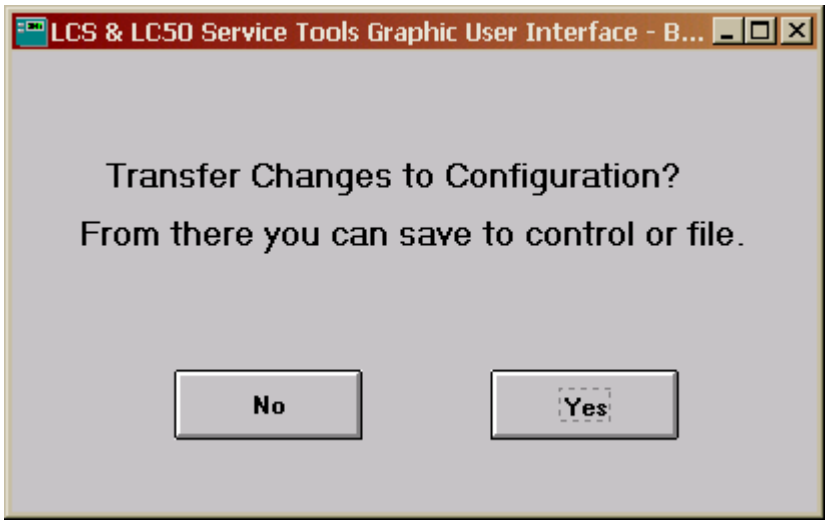

12. If the final application uses more than one engine speed or more than one fuel, tuning values should be obtained with these settings.
13. Press the Real Time Tuner Menu selection. Set a different engine speed by entering the value next to DESIRED SPEED, and press SET. Repeat the tuning process as outlined in steps 9 through 11. Or run the engine with the different fuel.
14. When optimal tuning is achieved, manually write down the reset and gain values. Common gain and compensation are common to all speed settings and dynamics so they should be optimized for all settings. DO NOT ACCEPT THE TRANSFER CHANGES TO CONFIGURATION option when you exit the real time tuner. This option will overwrite the values you established for the primary fuel and speed setting 1. You will need to manually enter these values in the appropriate places on SCREEN 2 of the EDIT Configuration Menu.
15. If the final application uses droop, run the engine at no-load and full-load conditions. Note the shaft position at both load conditions using the GET APOS (actuator actual position) button.
16. Shut down the engine safely.
17. Remove power from the control.
18. Exit the REAL-TIME TUNER menu.

Katolight Service - Master Repair Manual - Page 3165

Application Development Testing

The actuator tuning and engine tuning exercises outlined earlier in this manual yield control loop settings that are optimized for a specific instance of a fuel system, engine, and load. Due to fuel system tolerances, changing fuel quality, engine-to-engine output power variations, load changes, environmental changes, and long-term mechanical wear, it is NOT recommended that an initial configuration file be put into production without some sort of application development testing.

The LCS has been engineered to provide highly repeatable performance from unit to unit; therefore, a configuration file must be robust enough to account for all of the possible variations in an engine's power output. A recommended, but not comprehensive, list of tests might include:

- Cold start, warm start, and hot start tests
- Sea-level and high-altitude tests
- Fuel quality variation tests
- Engine break-in tests
- Long-term (endurance) tests
- Multiple engine application tests

The intention of such testing is to identify scenarios where the governor goes unstable due to changes in the application. An actuator might rapidly oscillate after some long-term wear testing due to the friction changes. In certain environmental, fuel quality, or engine break-in tests the engine may actually develop more or less power than during the tuning exercises, in which case the governor may become unstable. In all cases of high-frequency instability, the appropriate control coefficient must be reduced. This action must also be balanced against basic performance requirement imposed on the application.

Katolight Service - Master Repair Manual - Page 3166

Chapter 5. Troubleshooting

This chapter presents several broad categories of application failures typically experienced in the field, possible causes, and some tests used to verify the causes. Because the exact failure experienced in the field is the product of the mechanical/electrical failure combined with the configuration file resident in the control, it is left as the OEM's responsibility to create a more detailed troubleshooting chart for the end user. Ideally, this end-user troubleshooting chart will contain information about mechanical, electrical, engine, and load failures in addition to the possible governor failures. For more detailed information about governor system failure modes and effects, contact Woodward for a copy of the system DFMEA.

The troubleshooting scenarios listed below assume the end user has a digital multimeter at his disposal for testing voltages and checking continuity, and assume that the application has been engineered and tested thoroughly.

Engine/Generator Troubleshooting

Problem	Possible Cause	Suggested Test/Correction
Engine does not start	Stuck throttle/frozen shaft	Move throttle by hand. Assess smoothness, friction, and return spring force.
	Power not applied to control	Disconnect starter motor solenoid. Disconnect harness from governor. Activate application. Test for +12 V between +12V pin and ground pin.
	+5V output shorted to ground	Disconnect starter motor solenoid. Activate application. Test for +5 V between +5V OUT pin and AUX1– pin.
	MPU gap too large	Remove and reinstall MPU per OEM's instructions. Rotate engine manually to check for interference.
	MPU signal connection open	Disconnect harness from governor. Activate application. Test for at least 1.5 Vrms between MPU+ pin and MPU– pin during cranking.
	Ignition signal connection open	Disconnect harness from governor. Activate application. Test for bouncing voltage between IGN pin and ground pin during cranking.

Katolight Service - Master Repair Manual - Page 3167

Problem	Possible Cause	Suggested Test/Correction
Engine does not start (cont.)	No configuration file or incorrect configuration file in controller	Disconnect harness from governor. Attach programming harness to computer. Read configuration file from controller and evaluate parameters for correction.
Engine starts, but shuts down on error	MPU gap too large	Remove and reinstall MPU per OEM's instructions. Rotate engine manually to check for interference.
	MPU signal intermittent	Disconnect harness from governor. Continuously check resistance between MPU+ pin and MPU– pin while inspecting harness and connectors during cranking.
	Ignition signal intermittent	Disconnect harness from governor. Continuously check continuity between IGN pin and ignition coil primary while inspecting harness and connectors during cranking.
Engine starts, runs, but is unstable	Dual dynamics AUX shorted or open	Disconnect starter motor solenoid. Activate application. Check for correct voltage level between dual dynamics AUX pin and ground pin for known application mode.
	Dynamics values not tuned	Follow engine governor tuning procedure.
	Air/fuel ratio not correct	If using LC-50 mixer, MAS, & ZPR, follow air/fuel ratio tuning guidelines in Chapter 4. Otherwise, follow fuel system manufacturer's guidelines.
Incorrect mode of operation (speed, speed bias function, dynamics)	AUX inputs shorted or open	Disconnect starter motor solenoid. Disconnect harness from governor. Activate application. Check for correct voltage level between AUX pin(s) under question and ground pin for known application modes.

Katolight Service - Master Repair Manual - Page 3168

Problem	Possible Cause	Suggested Test/Correction
Unable to develop full power	Non-indexed linkage slipped on shaft	Manually verify full travel of throttle plate.
	Shorted MAP sensor input	Disconnect starter motor solenoid. Activate application. Verify AUX1+ voltage matches expected voltage for known atmospheric conditions.
	Fault code set	Disconnect harness from governor. Attach programming harness. view status of fault codes. Take appropriate action for active faults.
Overspeed Error	Gains not set properly for transients	If overspeed occurs on transient, raise common gain to reduce overshoot.
	Start Fuel Limit not set properly	Lower rpm run threshold or lower start fuel position.
	Speed sensing error	Follow instructions for MPU or ignition signal intermittent under Failsafe Error.
Failsafe Error	MPU signal intermittent	Disconnect harness from governor. Continuously check resistance between MPU+ pin and MPU– pin while inspecting harness and connectors during cranking.
	Ignition signal intermittent	Disconnect harness from governor. Continuously check continuity between IGN pin and ignition coil primary while inspecting harness and connectors during cranking.
	Engine running at extremely low speed	Increase failsafe timeout period.
Configuration Error	No configuration file written to controller.	Disconnect harness from governor. Attach programming harness to governor. Write appropriate configuration file to controller using the software tools.

Katolight Service - Master Repair Manual - Page 3169

Programming Troubleshooting

Problem	Possible Cause	Suggested Test/Correction
Error message: Missing ACCESS.KEY file	Configuration file has OEM security key written to it	Make an access key with the software tools.
Error message: The configuration data is the wrong format. Try converting the data to the current LCS Firmware Rev	Configuration file not same version as actuator	Obtain proper configuration file.
Error message: Timed Out!	No power to actuator	Check connections and retry.
Error message: Unable to establish link. Exit real time tuner?	No power to actuator	Check connections and retry.

Katolight Service - Master Repair Manual - Page 3170

Chapter 6.
Service Options

How to Contact Woodward

In North America use the following address when shipping or corresponding:

Woodward Governor Company
PO Box 1519
1000 East Drake Rd
Fort Collins CO 80522-1519, USA

Telephone—+1 (970) 482-5811 (24 hours a day)
Toll-free Phone (in North America)—1 (800) 523-2831
Fax—+1 (970) 498-3058

For assistance outside North America, call one of the following international Woodward facilities to obtain the address and phone number of the facility nearest your location where you will be able to get information and service.

Facility	Phone Number
Australia	+61 (2) 9758 2322
India	+91 (129) 523 0419
Japan	+81 (476) 93-4661
The Netherlands	+31 (23) 5661111

You can also contact the Woodward Customer Service Department or consult our worldwide directory on Woodward's website (**www.woodward.com**) for the name of your nearest Woodward distributor or service facility. [For worldwide directory information, go to **www.woodward.com/ic/locations**.]

Engineering Services

Woodward Industrial Controls Engineering Services offers the following after-sales support for Woodward products. For these services, you can contact us by telephone, by e-mail, or through the Woodward website.

- Technical Support
- Customer Training
- Field Service

Contact information:

Telephone—+1 (970) 482-5811
Toll-free Phone (in North America)—1 (800) 523-2831
E-mail—icinfo@woodward.com
Website—**www.woodward.com/ic**

Katolight Service - Master Repair Manual - Page 3171

Technical Support is available through our many worldwide locations, through our authorized distributors, or through GE Global Controls Services, depending on the product. This service can assist you with technical questions or problem solving during normal business hours. Emergency assistance is also available during non-business hours by phoning our toll-free number and stating the urgency of your problem. For technical engineering support, please contact us via our toll-free or local phone numbers, e-mail us, or use our website and reference ***technical support***.

Customer Training is available on-site from several of our worldwide facilities, at your location, or from GE Global Controls Services, depending on the product. This training, conducted by experienced personnel, will assure that you will be able to maintain system reliability and availability. For information concerning training, please contact us via our toll-free or local phone numbers, e-mail us, or use our website and reference ***customer training***.

Field Service engineering on-site support is available, depending on the product and location, from our facility in Colorado, or from one of many worldwide Woodward offices or authorized distributors. Field engineers are experienced on both Woodward products as well as on much of the non-Woodward equipment with which our products interface. For field service engineering assistance, please contact us via our toll-free or local phone numbers, e-mail us, or use our website and reference ***field service***.

Katolight Service - Master Repair Manual - Page 3172

Technical Assistance

If you need to telephone for technical assistance, you will need to provide the following information. Please write it down here before phoning:

General

Your Name_____
Site Location_____
Phone Number_____
Fax Number_____

Prime Mover Information

Engine/Turbine Model Number_____
Manufacturer_____
Number of Cylinders (if applicable)_____
Type of Fuel (gas, gaseous, steam, etc)_____
Rating_____
Application_____

Governor Information

Please list all Woodward governors, actuators, and electronic controls in your system:

Woodward Part Number and Revision Letter

_____

Control Description or Governor Type

_____

Serial Number_____

Woodward Part Number and Revision Letter

_____

Control Description or Governor Type

_____

Serial Number_____

Woodward Part Number and Revision Letter

_____

Control Description or Governor Type

_____

Serial Number_____

If you have an electronic or programmable control, please have the adjustment setting positions or the menu settings written down and with you at the time of the call.

Katolight Service - Master Repair Manual - Page 3173

Katolight Service - Master Repair Manual - Page 3174

Appendix A. Acronyms/Abbreviations

A/F	air/fuel ratio
Isoch	isochronous
CLI	command line interface
DIS	distributorless ignition system
EEPROM	electrically-erasable programmable read-only memory
EMC	electro-magnetic compatibility
GUI	graphic user interface
ITB	integrated throttle body
LC-50	Woodward system that incorporates LCS with an ITB and mixer
LCS	Woodward electronic engine governor that contains both a rotary actuator and a controller circuit board
MAP	manifold air pressure
MAS	main adjustment screw
MPU	magnetic pick up
OEM	original equipment manufacturer
stoichiometric	chemically balanced air/fuel ratio
ZPR	zero pressure regulator

Katolight Service - Master Repair Manual - Page 3175

Katolight Service - Master Repair Manual - Page 3176

Appendix B. Configuration File

The GUI Tool presents the configuration files in a graphical format for editing and saving. This tool also creates a text file version of the configuration file that can be viewed and edited with any text editor. If there is ever any need to review the files in this form, this appendix presents the format. Consult the features description section for a more thorough review of the following parameters. This Appendix is intended only to be a decoder for the text version of the configuration file.

A configuration file contains 60 parameter entries spread across three major groupings—documentation/security, feature enable bits, and feature parameters. All parameter entries use the following format:

```
;
; parameter number:
; parameter name:
; comment:
; lower bound:
; upper bound:
;
actual value
```

Each line starting with a semicolon is considered a comment, and is ignored during a download. Parameter number relates a parameter's location in the file to a known memory address inside the control. Never change the order of parameters within a file—incorrect data may be downloaded into the control as a result. Parameter name is a mnemonic name given to a parameter so it is easier to identify. Parameter names typically reflect the name stored inside the control itself. A comment field is included with all parameters; this field of information helps explain the meaning of a parameter's value. Lower bound and upper bound are limits placed on a parameter's value. If the actual value of a parameter falls outside the lower or upper limits, then the file will not be downloadable into the control. Lines that do not start with a semicolon, and contain either a numeric or single-quoted ('xxx') string, are considered actual parameter values.

Generator Version Format (LC-50G)

Documentation and security parameters include:

- **Parameter #0: oem_free_form_text**: The OEM may use this parameter to record a configuration part number and revision level up to 20 characters in length. If the parameter is not used, the parameter value must still contain a set of single quotes ('').
- **Parameter #1: oem_security_key**: The OEM may use this parameter to key his controls to his distribution of dealer service tools.. If the OEM decides to not key his configuration files, then this parameter must still contain a set of single quotes ('').

Katolight Service - Master Repair Manual - Page 3177

Feature enable parameters include:

- **Parameter #2: hardware_configuration_register**: This parameter is used to select the direction of actuator rotation, configure AUX1 for analog or digital operation, and assign functions to alternate AUX input pins if necessary. The value of hardware_configuration_register is the sum of the bit values for each enabled option, as listed below:
  - **Bit 7** (value=128): rsvd, Reserved; setting this bit either way has no effect on the controller's operation.
  - **Bit 6** (value=64): A1anlg: when enabled, makes Aux 1 an analog
  - **Bit 5** (value=32): A1-5v: If AUX1 is an analog input and this bit is enabled, AUX1 is a 0–5 V input instead of a ±3 V input
  - **Bit 4** (value=16): 5060A1: If the 50/60 Hz select function is enabled, and this bit is enabled, then the selection function is based on the state of AUX1 instead of AUX4 when power is first applied to the governor.
  - **Bit 3** (value=8): isdpA2: If either the isoch/droop function or the aux bias/droop function is enabled, and this bit is enabled, then droop will be selected based on the polarity programmed into bit 1, and on the state of AUX2 instead of AUX4 when power is first applied to the governor.
  - **Bit 2** (value=4): ddA3: If the dual dynamics function is enabled, and this bit is enabled, then the function is based on the state of AUX3 instead of AUX4.
  - **Bit 1** (value=2): dpolLOW: If either the isosch/droop function or the aux bias/droop function is enabled, and this bit is enabled, then droop will be selected whenever the appropriate AUX input is left open or grounded. If this bit is not enabled, then droop will be selected whenever the AUX input is shorted to +12 V.
  - **Bit 0** (value=1): rsvd: Reserved; setting this bit either way has no effect on the controller's operation.
- **Parameter #3: feature_enable1**: This parameter is one of three used to turn on different functions within the control. Refer to Figure 1-1, the system block diagram, to see the relationship between bits, function names, and where they are within the control loop. The value of feature_enable1 is the sum of the bit values for each enabled option, as listed below:
  - **Bit 7** (value=128): cmode: Enabling this bit turns on the Governor State function. This function is required for all speed governor applications; it is not required for positioner applications.
  - **Bit 6** (value=64): ovspd: Enabling this bit turns on the Overspeed Error protection function when the governor state is 'run'.
  - **Bit 5** (value=32): fsafe: Enabling this bit turns on the Failsafe Error protection function when the governor state is 'run'.
  - **Bit 4** (value=16): rsvd, Reserved; setting this bit either way has no effect on the controller's operation.
  - **Bit 3** (value=8): relay: Enabling this bit turns on the Relay Control function when the governor state is 'error'.
  - **Bit 2** (value=4): fltst: Enabling this bit turns on the EE Fault Storage function when the governor state is 'error'.
  - **Bit 1** (value=2): actgt: Enabling this bit turns on the Actuator Gate function.

Katolight Service - Master Repair Manual - Page 3178

- **Bit 0** (value=1): servo: Enabling this bit turns on the Position Control function. The Position Control function essentially overrides the Governor State function and translates a 0–5 V input into a desired position for the Actuator Control function.

NOTE

The Configuration Error function does not have a bit in any feature_enable byte; it is permanently enabled to check for the presence or absence of a configuration file in the control during power up.

Parameter #4: feature_enable2: This parameter is one of three used to turn on different functions within the control. Refer to Figure 1-1, the system block diagram, to see the relationship between bits, function names, and where they are within the control loop. The value of feature_enable2 is the sum of the bit values for each enabled option, as listed below:

- **Bit 7** (value=128): hzsel: Enabling this bit turns on the 50/60 Hz Select function when power is first applied to the governor.
- **Bit 6** (value=64): idlrt: Enabling this bit turns on the Idle/Rated Select function.
- **Bit 5** (value=32): rsvd: Reserved; setting this bit either way has no effect on the controller's operation.
- **Bit 4** (value=16): rslwr: Enabling this bit turns on the Raise/Lower Adjust function .
- **Bit 3** (value=8): rsvd: Reserved; setting this bit either way has no effect on the controller's operation.
- **Bit 2** (value=4): droop: Enabling this bit turns on the Droop function.
- **Bit 1** (value=2): auxbs: Enabling this bit turns on the Aux Bias function.
- **Bit 0** (value=1): isodp: Enabling this bit turns on the Isoch/Droop Select function when power is first applied to the governor.

NOTE

The Single Speed function does not have a bit in any feature_enable byte; it is the default speed setting function if none of the other speed setting functions are selected.

The Isochronous function does not have a bit in any feature_enable byte; it is the default speed biasing function if none of the other speed biasing functions are selected.

Parameter #5: feature_enable3: This parameter is one of three used to turn on different functions within the control. Refer to Figure 1-1, the system block diagram, to see the relationship between bits, function names, and where they are within the control loop. The value of feature_enable3 is the sum of the bit values for each enabled option, as listed below:

Katolight Service - Master Repair Manual - Page 3179

- **Bit 7** (value=128): bsdrp: Enabling this bit turns on the Aux Bias/Droop Select function when power is first applied to the governor.
- **Bit 6** (value=64): duald: Enabling this bit turns on the Dual Dynamics function.
- **Bit 5** (value=32): spgov: Enabling this bit turns on the Speed Control function.
- **Bit 4** (value=16): adapt: This enables the auto-gain algorithm.
- **Bit 3** (value=8): sfuel: Enabling this bit turns on the Start Fuel Limiter.
- **Bit 2** (value=4): rsvd: Reserved; setting this bit either way has no effect on the controller's operation.
- **Bit 1** (value=2): bfuel: Enabling this bit turns on the Boost Fuel Limiter function.
- **Bit 0** (value=1): actrl: Enabling this bit turns on the Actuator Control function.

Parameter #6: speed_sensing_mode: This parameter is used to turn on different speed sensing functions within the control. Refer to Figure 1-1, the system block diagram, to see the relationship between bits, function names, and where they are within the control loop. The value of speed_sensing_mode is the sum of the bit values for each enabled option, as listed below:

- **Bit 7** (value=128): ignition: Enabling this bit turns on the Ignition Speed Sensing function.
- **Bit 6** (value=64): 2-stroke: Enabling this bit tells the Ignition Speed Sensing function that the ignition pulses present on pin 12 (IGN) are from a 2-stroke engine. Disabling this bit tells the ignition speed sensing function that the pulses are coming from a 4-stroke engine.
- **Bit 5** (value=32): mpu: Enabling this bit turns on the MPU Speed Sensing function.
- **Bits 2–0** (values 0-6): #cylinders: This set of bits specifies the number of cylinders for the Ignition Speed Sensing function.

Feature parameters include:
Parameter #7: failsafe_timeout_period: Specifies a timeout period for the Failsafe Error function between 0 and 512 milliseconds. Typical timeout value is 128 milliseconds.
Parameter #8: droop_percentage: Specifies the percentage reduction in engine speed for the Droop function when the actuator position equals full_load_actuator_position. Typical value is 10%.
Parameter #9: biasing_percentage: Specifies the percentage reduction/increase in engine speed for the Aux Bias function when the input voltage on AUX1 is –3 V, +3 V, 0 V, or 5 V. Typical value is 7%.
Parameter #10: start_fuel_limit: Specifies the maximum permitted shaft position when the Start Fuel Limiter function is enabled and the governor state is 'start1.' Typical value is same as full_load_actuator_position.
Parameter #11, #12, and #13: boost_pressure_volt1, boost_pressure_volt2, and boost_pressure_volt3: Specifies the x-points on the Boost Fuel Limiter curve.
Parameter #14, #15, and #16: boost_fuel_limit1, boost_fuel_limit2, boost_fuel_limit3: Specifies the y-points on the Boost Fuel Limiter curve.

Katolight Service - Master Repair Manual - Page 3180

Parameter #17: start_speed_threshold: Specifies the speed at which the Governor State changes from 'powerup' to 'start1.' Typical value is 64 rpm to detect engine cranking.
Parameter #18: run_speed_threshold: Specifies the speed at which the Governor State changes from 'start2' to 'run.' Typical value is 90% of the lowest speed_reference.
Parameter #19: overspeed_threshold: Specifies the speed threshold for changing the Governor State from 'run' to 'error' via the Overspeed Error function. Typical value is 10% to 20% above the highest speed_reference.
Parameter #20: reset1,: Primary set of dynamics for speed_reference1. Reset helps stabilize the engine/governor loop. Typical initial value is: reset=25%.
Parameter #21, #22, #23, gain11, gain12, gain13: Primary set of dynamics for speed_reference1. Gain affects engine load transient response and frequency of engine hunting. These are the y-points for the three point gain curve. The x-points are parameters #38, 39, 40.
Parameter #24: alternate_reset1,: Secondary set of dynamics for speed_reference1. Reset helps stabilize the engine/governor loop. Typical initial value is: reset=25%.
Parameter #25, #26, #27, alternate_gain11, alternate_gain12, alternate_gain13: Primary set of dynamics for speed_reference1.
Parameter #28: reset2, : Primary set of dynamics for speed_reference2.
Parameter #29, #30, #31, gain21, gain22, gain23: Primary set of dynamics for speed_reference2. These are the y-points for the three point gain curve. The x-points are parameters #38, 39, 40.
Parameter #32: alternate_reset2: Secondary set of dynamics for speed_reference2.
Parameter #33, #34, and #35: alternate_gain21, alternate_gain22, and alternate_gain23: Alternate set of dynamics for speed_reference2.
Parameter #36: compensation: Dynamic term common to all speed settings and **dynamics.**
Parameter #37: common_gain: Common to all speed settings and dynamics.
Parameter #38, #39, #40: gain_position1, gain_position2, gain_position3: Y-points for the three point gain curve. Common for all speed settings and all dynamics.
Parameter #41: gain_decrement: Used by auto-gain algorithm to decrement the gain by a predefined amount.
Parameter #42: gain_increment: Used by auto-gain algorithm to increase the gain by a predefined amount.
Parameter #43: min_gain: Used by auto-gain algorithm as lower limit.
Parameter #44: max_gain: Used by auto-gain algorithm to upper limit.
Parameter #45: rated_to_idle_delay: Specifies the amount of time to delay before ramping from rated speed (speed_reference2) to idle speed (speed_reference1) for the Idle/Rated Select function.
Parameter #46: speed_adjust_lower_limit: Specifies the lowest desired speed possible with the Raise/Lower Adjust function.
Parameter #47: speed_adjust_upper_limit: Specifies the highest desired speed possible with the Raise/Lower Adjust function.
Parameter #48, #49, and #50: proportional, derivative, and integral: Control coefficients for the Actuator Control function.

Katolight Service - Master Repair Manual - Page 3181

Parameter #51: events_per_engine_rev: Specifies the number of flywheel or gear teeth that pass the face of a MPU for one revolution of the engine's crankshaft.
Parameter #52, #53: speed_reference1, speed_reference2: Specifies the desired engine speeds depending on the enabled speed select function. Speed_reference1 is the default speed setting.
Parameter #54: steady_state: Used by auto-gain algorithm
Parameter #55: transient: Used by auto-gain algorithm.
Parameter #56, #57: speed_decrease_rate, speed_increase_rate: Specifies the ramping rates for the Raise/Lower Adjust function.
Parameter #58, #59: no_load_actuator_position, full_load_actuator_position: Specifies the 0% engine load and 100% engine load actuator positions for the Droop function.

Industrial Version Format (LC-50I)

An industrial configuration file contains 58 parameter entries.

Documentation and security parameters include:

- **Parameter #0: oem_free_form_text**: The OEM may use this parameter to record a configuration part number and revision level up to 20 characters in length. If the parameter is not used, the parameter value must still contain a set of single quotes (‘’).
- **Parameter #1: oem_security_key**: The OEM may use this parameter to key his controls to his distribution of dealer service tools.. If the OEM decides to not key his configuration files, then this parameter must still contain a set of single quotes (‘’).

Feature enable parameters include:

- **Parameter #2: hardware_configuration_register**: This parameter is used to select the direction of actuator rotation, configure AUX1 for analog or digital operation, and assign functions to alternate AUX input pins if necessary. The value of hardware_configuration_register is the sum of the bit values for each enabled option, as listed below:
  - **Bit 7** (value=128): rsvd: Reserved; setting this bit either way has no effect on the controller's operation.
  - **Bit 6** (value=64): A1anlg: If enabled, AUX1 is an analog input instead of a digital input.
  - **Bit 5** (value=32): A1-5v: If AUX1 is an analog input and this bit is enabled, AUX1 is a 0–5 V input instead of a ±3 V input
  - **Bit 4** (value=16): rsvd: Reserved; setting this bit either way has no effect on the controller's operation.
  - **Bit 3** (value=8): rsvd: Reserved; setting this bit either way has no effect on the controller's operation.
  - **Bit 2** (value=4): ddA3: If the dual dynamics function is enabled, and this bit is enabled, then the function is based on the state of AUX3 instead of AUX4.
  - **Bit 1** (value=2): rsvd: Reserved; setting this bit either way has no effect on the controller's operation.

Katolight Service - Master Repair Manual - Page 3182

  - **Bit 0** (value=1): rsvd: Reserved; setting this bit either way has no effect on the controller's operation.

- **Parameter #3: feature_enable1**: This parameter is one of three used to turn on different functions within the control. Refer to Figure 1-1, the system block diagram, to see the relationship between bits, function names, and where they are within the control loop. The value of feature_enable1 is the sum of the bit values for each enabled option, as listed below:
  - **Bit 7** (value=128): cmode: Enabling this bit turns on the Governor State function. This function is required for all speed governor applications; it is not required for positioner applications.
  - **Bit 6** (value=64): ovspd: Enabling this bit turns on the Overspeed Error protection function when the governor state is 'run'.
  - **Bit 5** (value=32): fsafe: Enabling this bit turns on the Failsafe Error protection function when the governor state is 'run'.
  - **Bit 4** (value=16): rsvd: Reserved; setting this bit either way has no effect on the controller's operation.
  - **Bit 3** (value=8): relay: Enabling this bit turns on the Relay Control function when the governor state is 'error'.
  - **Bit 2** (value=4): fltst: Enabling this bit turns on the EE Fault Storage function when the governor state is 'error'.
  - **Bit 1** (value=2): actgt: Enabling this bit turns on the Actuator Gate function.
  - **Bit 0** (value=1): servo: Enabling this bit turns on the Position Control function. The Position Control function essentially overrides the Governor State function and translates a 0–5 V input into a desired position for the Actuator Control function.

NOTE

The Configuration Error function does not have a bit in any feature_enable byte; it is permanently enabled to check for the presence or absence of a configuration file in the control during power up.

- **Parameter #4: feature_enable2**: This parameter is one of three used to turn on different functions within the control. Refer to Figure 1-1, the system block diagram, to see the relationship between bits, function names, and where they are within the control loop. The value of feature_enable2 is the sum of the bit values for each enabled option, as listed below:
  - **Bit 7** (value=128): rsvd: Reserved; setting this bit either way has no effect on the controller's operation.
  - **Bit 6** (value=64): idlrt: Enabling this bit turns on the Idle/Rated Select function.
  - **Bit 5** (value=32): 3-spd: Enabling this bit turns on the Three-Speed Select function.
  - **Bit 4** (value=16): rsvd: Reserved; setting this bit either way has no effect on the controller's operation.
  - **Bit 3** (value=8): rsvd: Reserved; this feature is not supported at this time. The bit should not be enabled.
  - **Bit 2** (value=4): rsvd: Reserved; setting this bit either way has no effect on the controller's operation.

Katolight Service - Master Repair Manual - Page 3183

- **Bit 1** (value=2): auxbs: Enabling this bit turns on the Aux Bias function.
- **Bit 0** (value=1): rsvd: Reserved; setting this bit either way has no effect on the controller's operation.

NOTE

The Single Speed function does not have a bit in any feature_enable byte; it is the default speed setting function if none of the other speed setting functions are selected.

The Isochronous function does not have a bit in any feature_enable byte; it is the default speed biasing function if none of the other speed biasing functions are selected.

- **Parameter #5: feature_enable3**: This parameter is one of three used to turn on different functions within the control. Refer to Figure 1-1, the system block diagram, to see the relationship between bits, function names, and where they are within the control loop. The value of feature_enable3 is the sum of the bit values for each enabled option, as listed below:
  - **Bit 7** (value=128): rsvd: Reserved; setting this bit either way has no effect on the controller's operation.
  - **Bit 6** (value=64): duald: Enabling this bit turns on the Dual Dynamics function.
  - **Bit 5** (value=32): spgov: Enabling this bit turns on the Speed Control function.
  - **Bit 4** (value=16): adapt: This enable the auto-gain algorithm.
  - **Bit 3** (value=8): sfuel: Enabling this bit turns on the Start Fuel Limiter.
  - **Bit 2** (value=4): rsvd: Reserved; setting this bit either way has no effect on the controller's operation.
  - **Bit 1** (value=2): rsvd: Reserved; setting this bit either way has no effect on the controller's operation.
  - **Bit 0** (value=1): actrl: Enabling this bit turns on the Actuator Control function.
- **Parameter #6: speed_sensing_mode**: This parameter is used to turn on different speed sensing functions within the control. Refer to Figure 1-1, the system block diagram, to see the relationship between bits, function names, and where they are within the control loop. The value of speed_sensing_mode is the sum of the bit values for each enabled option, as listed below:
  - **Bit 7** (value=128): ignition: Enabling this bit turns on the Ignition Speed Sensing function.
  - **Bit 6** (value=64): 2-stroke: Enabling this bit tells the Ignition Speed Sensing function that the ignition pulses present on pin 12 (IGN) are from a 2-stroke engine. Disabling this bit tells the ignition speed sensing function that the pulses are coming from a 4-stroke engine.
  - **Bit 5** (value=32): mpu: Enabling this bit turns on the MPU Speed Sensing function.
  - **Bits 2-0** (values 0-6): #cylinders: This set of bits specifies the number of cylinders for the Ignition Speed Sensing function.

Katolight Service - Master Repair Manual - Page 3184

Feature parameters include:

- **Parameter #7: failsafe_timeout_period**: Specifies a timeout period for the Failsafe Error function between 0 and 512 milliseconds. Typical timeout value is 128 milliseconds.
- **Parameter #8: biasing_percentage**: Specifies the percentage reduction/increase in engine speed for the Aux Bias function when the input voltage on AUX1 is –3 V, +3 V, 0 V, or 5 V. Typical value is 7%.
- **Parameter #9: start_fuel_limit**: Specifies the maximum permitted shaft position when the Start Fuel Limiter function is enabled and the governor state is 'start1.' Typical value is same as full_load_actuator_position.
- **Parameter #10: start_speed_threshold**: Specifies the speed at which the Governor State changes from 'powerup' to 'start1.' Typical value is 64 rpm to detect engine cranking.
- **Parameter #11: run_speed_threshold**: Specifies the speed at which the Governor State changes from 'start2' to 'run.' Typical value is 90% of the lowest speed_reference.
- **Parameter #12: overspeed_threshold**: Specifies the speed threshold for changing the Governor State from 'run' to 'error' via the Overspeed Error function. Typical value is 10% to 20% above the highest speed_reference.
- **Parameter #13: reset1**: Primary set of dynamics for speed_reference1. Reset helps stabilize the engine/governor loop. Typical initial value is: reset=25%.
- **Parameter #14, #15, #16, gain11, gain12, gain13**: Primary set of dynamics for speed_reference1. Gain affects engine load transient response and frequency of engine hunting. These are the y-points for the three point gain curve. The x-points are parameters #38, 39, 40.
- **Parameter #17: alternate_reset1**: Secondary set of dynamics for speed_reference1. Reset helps stabilize the engine/governor loop. Typical initial value is: reset=25%.
- **Parameter #18, #19, #20, alternate_gain11, alternate_gain12, alternate_gain13**: Primary set of dynamics for speed_reference1. Gain affects engine load transient response and frequency of engine hunting. These are the y-points for the three point gain curve. The x-points are parameters #38, 39, 40.
- **Parameter #21 : reset2**: Primary set of dynamics for speed_reference2. Reset helps stabilize the engine/governor loop. Typical initial value is: reset=25%.
- **Parameter #22, #23, #24, gain21, gain22, gain23**: Primary set of dynamics for speed_reference2. Gain affects engine load transient response and frequency of engine hunting. These are the y-points for the three point gain curve. The x-points are parameters #38, 39, 40.
- **Parameter #25: alternate_reset2**: Secondary set of dynamics for speed_reference2. Reset helps stabilize the engine/governor loop. Typical initial value is: reset=25%.
- **Parameter #26, #27, and #28: alternate_gain21, alternate_gain22, and alternate_gain23**: Alternate set of dynamics for speed_reference2. Gain affects engine load transient response and frequency of engine hunting.
- **Parameter #29: reset3**: Primary set of dynamics for speed_reference3. Reset helps stabilize the engine/governor loop. Typical initial value is: reset=25%.

Katolight Service - Master Repair Manual - Page 3185

- **Parameter #30, #31, and #32: gain31, gain32, and gain33**: Primaru set of dynamics for speed_reference3. Gain affects engine load transient response and frequency of engine hunting.
- **Parameter #33: alternate_reset3**: Secondary set of dynamics for speed_reference3. Reset helps stabilize the engine/governor loop. Typical initial value is: reset=25%.
- **Parameter #34, #35, and #36: alternate_gain31, alternate_gain32, and alternate_gain33**: Alternate set of dynamics for speed_reference3. Gain affects engine load transient response and frequency of engine hunting.
- **Parameter #37: compensation**: Compensation nulls out the lag effect of the actuator control loop. Typical initial value is: 50%.
- **Parameter #38: common_gain**:
- **Parameter #39, #40, #41: gain_position1, gain_position2, gain_position3**: Y-points for the three point gain curve. Common for all speed settings and all dynamics.
- **Parameter #42: gain_decrement**: Used by auto-gain algorithm to decrement the gain by a predefined amount.
- **Parameter #43: gain_increment**: Used by auto-gain algorithm to increase the gain by a predefined amount.
- **Parameter #44: min_gain**: Used by auto-gain algorithm as lower limit.
- **Parameter #45: max_gain**: Used by auto-gain algorithm to upper limit.
- **Parameter #46: rated_to_idle_delay**: Specifies the amount of time to delay before ramping from rated speed (speed_reference2) to idle speed (speed_reference1) for the Idle/Rated Select function.
- **Parameter #47, #48, and #49: proportional, derivative, and integral**: Control coefficients for the Actuator Control function.
- **Parameter #50: events_per_engine_rev**: Specifies the number of flywheel or gear teeth that pass the face of a MPU for one revolution of the engine's crankshaft.
- **Parameter #51: speed_reference1**: Specifies the desired engine speeds depending on the enabled speed select function. Speed_reference1 is the default speed setting.
- **Paramter #52: speed_reference2, speed_zone_1_to_2**: Secondary speed reference. Uses dynamics gain2x and alternate gain2x and reset 2
- **Parameter #53: speed_reference3, speed_zone_1_to_3**
- **Parameter #54: steady_state**: Used by auto-gain algorithm
- **Parameter #55: transient**: Used by auto-gain algorithm.
- **Parameter #56, #57: speed_decrease_rate, speed_increase_rate**: Specifies the ramping rates for the Raise/Lower Adjust function.

Katolight Service - Master Repair Manual - Page 3186

Appendix C.
Dynamics File Format

A dynamics file contains five parameter entries for the five available speed control gains. All parameter entries use the following format:

```
;
; parameter number:
; parameter name:
; comment:
; lower bound:
; upper bound:
;
actual value
```

Each line starting with a semicolon is considered a comment, and is ignored during a download. Parameter number relates a parameter's location in the file to a known memory address inside the control. Never change the order of parameters within a file—incorrect data may be downloaded into the control as a result. Parameter name is a mnemonic name given to a parameter so it is easier to identify. Parameter names typically reflect the name stored inside the control itself. A comment field is included with all parameters; this field of information helps explain the meaning of a parameter's value. Lower bound and upper bound are limits placed on a parameter's value. If the actual value of a parameter falls outside the lower or upper limits, then the file will not be downloadable into the control. Lines that do not start with a semicolon and contain a number are considered actual parameter values.

Katolight Service - Master Repair Manual - Page 3187

Katolight Service - Master Repair Manual - Page 3188

LCS Control Specifications

Specifications

Power Supply	12 V systems (8–16 Vdc) reverse polarity protection; must be fed from a Class 2 power source
Power Consumption	64 W maximum
Torque	0.34 N·m (0.25 lb-ft)
Mass/Weight	425 g (15 oz)

Control Characteristics

Speed Input and Range	Magnetic pickup, ignition coil input, or DIS input
MPU input	100 to 12 000 Hz
IGN input	1, 2, 3, 4, 5, 6, & 8 cylinder engines with rated speeds of 1200–4000 rpm
Engine Type	2-cycle or 4-cycle gasoline, diesel, or gaseous fuel
Target speed	Programmable
Actuator Torque	High-efficiency torque motor delivers 0.34 N·m (0.25 lb-ft) (standard model) over 60° travel range to operate fuel or air control

Steady State Speed Regulation	**Fuel Type:**	**Gasoline**	**Diesel**	**Gaseous**
	MPU Input:	±0.35%	±0.25%	±0.35%
	Ignition Input:	±0.50%	n/a	±0.50%

Functions/Auxiliary Inputs

Function Options	Isochronous speed (50 or 60 Hz), multiple speeds, two or three speed, droop, dual dynamics, adjustable max fuel stop, manifold air pressure-biased fuel limiter
Programmable	Through 12-pin Deutsch connector
Aux1 Options	Auxiliary load sharing, remote speed setting, MAP fuel limiting, 50/60 Hz select, isochronous load sharing/droop select
Aux2 Options	Lower speed, isochronous speed control/droop select, isochronous load sharing/droop select, idle/rated select, three speed select
Aux3 Options	Raise speed, dual dynamics select, three speed select
Aux4 Options	50/60 Hz select, isochronous speed control/droop select, isochronous load sharing/droop select, dual dynamics select, three speed select
Aux5 Options	Is permanently configured as an output to drive a relay

Environment

Ambient Operating Temperature	–40 to +85 °C (–40 to +185 °F)
Storage Temperature	–40 to +125 °C (–40 to +257 °F)
EMI/RFI	EN50081-1 (emissions) EN50082-2 (immunity)
Humidity	US MIL-STD 810E, Method 507.3, Procedure III
Salt Spray	US MIL-STD 810E, Method 509.3, Procedure I
Shock	US MIL-STD 810E, Method 516.4, Procedure I
Random Vibration	US MIL-STD 202F, Procedure 214A, Test Condition ID
Drop	SAE J1211, Paragraph 4.8.3 (modified)
Thermal Shock	SAE J1455, Paragraph 4.1.3.2
Dust	SAE J1455, Paragraph 4.7
Pressure Wash	A modified SAE J1455, Paragraph 4.5
Fluid Resistance	A modified SAE J1455, Paragraph 4.4
Electrical Load Power Connection	
Electrical Transient	2 J per SAE J1455, Paragraph 4.11.2.2.1

Compliance

UL/cUL	Listed (UL requires a Class 2 power source)
CE	Compliant
Other	89/392/EEC Machinery Directive

Reliability and Quality Goals

The LCS control system has a reliability target of 17 500 hours MTBF. It also has a quality goal of less than 25 PPM when measuring out-of-the-box defects. This quality goal is a target based on continuous improvement.

We appreciate your comments about the content of our publications.

Send comments to: icinfo@woodward.com

Please include the manual number from the front cover of this publication.

Woodward/Industrial Controls
PO Box 1519, Fort Collins CO 80522-1519, USA
1000 East Drake Road, Fort Collins CO 80525, USA
Phone +1 (970) 482-5811 • Fax +1 (970) 498-3058

E-mail and Home Page—www.woodward.com

FM 57982
BS EN ISO 9001:1994
6 March 2001

**Woodward has company-owned plants, subsidiaries, and branches,
as well as authorized distributors and other authorized service and sales facilities throughout the world.**

Complete address/phone/fax/e-mail information for all locations is available on our website.

02/11/F

MDEC Connection Instructions

January 31, 2005

Disconnect MDEC prior to welding unit

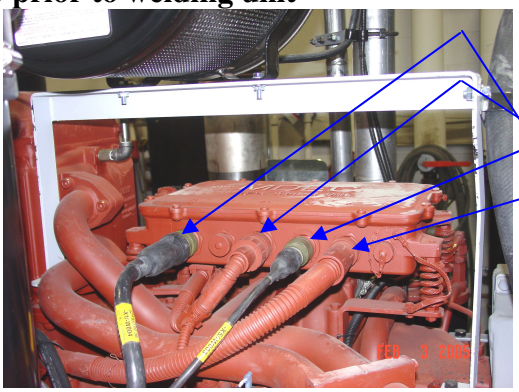
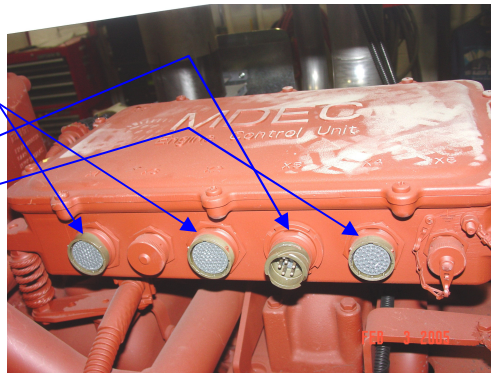

1) Disconnect the four wires on the right side of the MDEC. The connections twist to unlock.

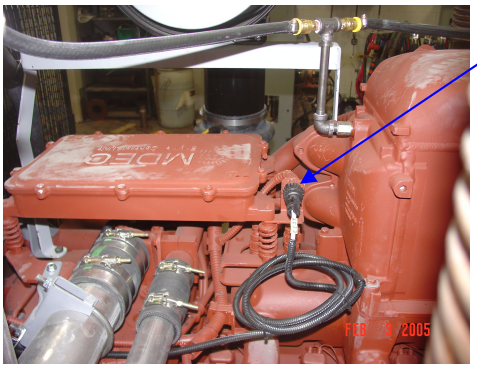
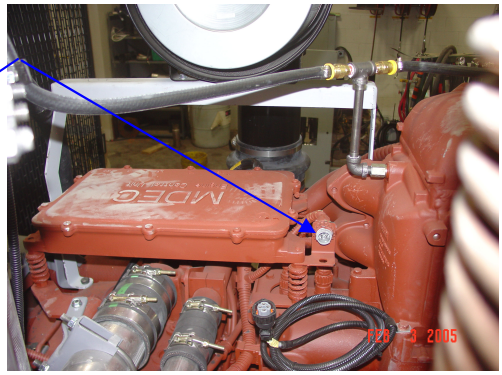

2) Disconnect the wire on the left side of the MDEC. This connection also twists to unlock.

Once welding is complete, BE SURE to reconnect all five wires to the MDEC

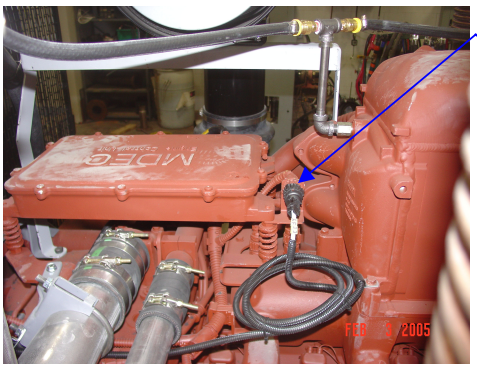
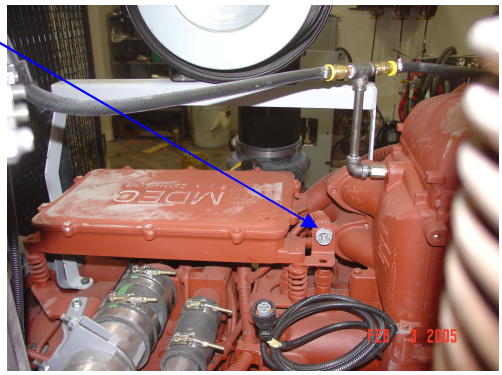

3) Reconnect the wire on the left side of the engine. Twist to lock.

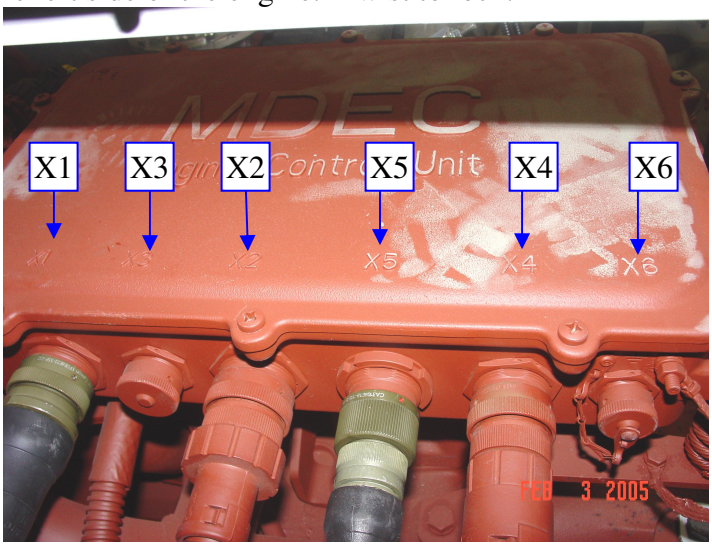

4) The MDEC connections are labeled on the top of the MDEC.



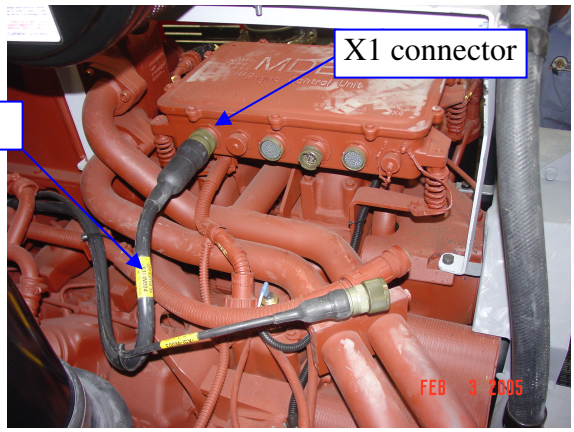

5) Reconnect the black wire labeled X1 to the X1 connector on the MDEC. Twist to lock.

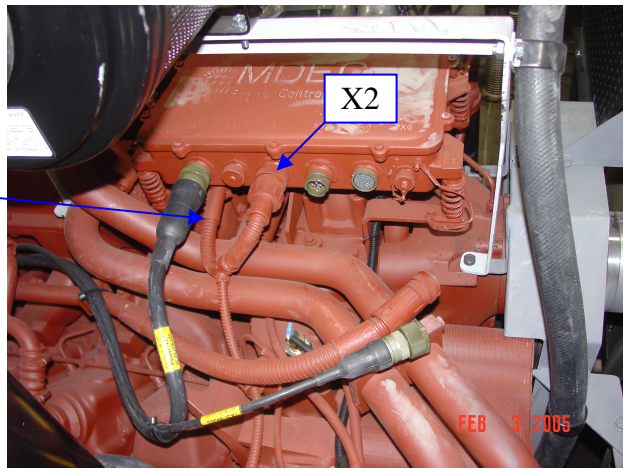

6) Reconnect the engine wire to X2. This wire is routed from the other side of the engine. Twist to lock



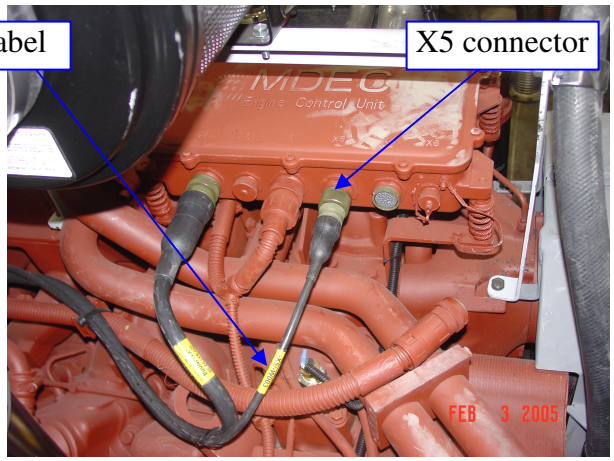

7) Reconnect the black wire labeled X5 to the X5 connector on the MDEC. Twist to lock.

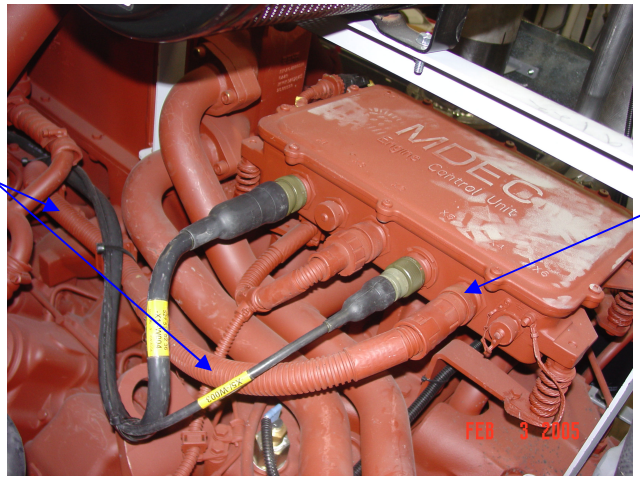

8) Reconnect the engine wire to X4. This wire is routed from the right side of the engine. Twist to lock

Katolight Service - Master Repair Manual - Page 3193

Error codes for ECU C2

Series 2000 / 4000

all Applications

M ⇒ Marine
R ⇒ Railway
G ⇒ Genset

Error Denomination	Error-Code	Error Cause	Reaction of the System	Tips for troubleshooting	Application M	R	G
L1 T–FUEL	3	Fuel Temperature to high	Alarm	Engine Documentation	X	X	X
L2 T–FUEL	4	no Limit Monitoring					
L1 T–CHARGE AIR	5	Charge Air Temp. to high	Alarm	Engine Documentation			X
L2 T–CHARGE AIR	6	no Limit Monitoring					
L1 T–CHARGE AIR B	7	not used					
L2 T–CHARGE AIR B	8	not used					
L1 T–INTERCOOLER	9	Coolant Temp. Intercooler	Alarm	Engine Documentation			X
L2 T–INTERCOOLER	10	no Limit Monitoring					
L1 P-CHARGE AIR	11	no Limit Monitoring					
L2 P-CHARGE AIR	12	no Limit Monitoring					
L1 P-CHARGE AIR B	13	not used					
L2 P-CHARGE AIR B	14	not used					
L1 P–LUBE OIL	15	Luboil Pressure to low	Alarm	Engine Documentation	X	X	X
L2 P–LUBE OIL	16	Luboil Pressure to low	Engine–Stop	Engine Documentation	X	X	X
L1 P-RAIL FUEL	17	no Limit Monitoring					
L2 P-RAIL FUEL	18	no Limit Monitoring					
L1 T–EXHAUST A	19	Exhaust Temperature A–Bank to high	Alarm	reduce Power	X	X	X
L2 T–EXHAUST A	20	no Limit Monitoring					
L1 T–EXHAUST B	21	Exhaust Temperature B–Bank to high	Alarm	reduce Power	X	X	X
L2 T–EXHAUST B	22	no Limit Monitoring					
L1 COOLANT LEVEL	23	Coolant Limit to low	Alarm	check Coolant Level in Expansion Tank	X	X	X
L2 COOLANT LEVEL	24	Coolant Limit to low	Engine–Stop (progr.)	check Coolant Level in Expansion Tank	X	X	X
L1 P–OILFILTER DIFF	25	Diff. Pressure to hi	Alarm	check Filter	X	X	
L2 P–OILFILTER DIFF	26	no Limit Monitoring					
L1 LEVEL LEAKAGEFUEL	27	Fuel Leakage Limit to high	Alarm	Open Fuel Leakage Tank, Engine Documentation	X		
L1 LEVEL LEAK.FUEL A	27	Fuel Leakage Limit A to high	Alarm	Open Fuel Leakage Tank, Engine Documentation	Mega		
L1 LEVEL LEAK.FUEL B	28	Fuel Leakage Limit B to high	Alarm	Open Fuel Leakage Tank, Engine Documentation	Mega		
L1 P–FUEL DIFF	29	Fuel Diff. Pressure to hi		check Filter		2000	
ENGINE OVERSPEED	30	Engine Overspeed	Engine–Stop	Start again	X	X	X

Katolight Service - Master Repair Manual - Page 3194

Error Denomination	Error-Code	Error Cause	Reaction of the System	Tips for troubleshooting	Application M	R	G
CHARGER1 OVERSPEED 1	31	Charger Overspeed Limit 1	PI–Fuel Quantity Limitation	check if the airfilter is clogged	4000	4000	4000
CHARGER1 OVERSPEED 2	32	Charger Overspeed Limit 2	Fuelrack Limitation on fixed value	check function of the Charger–Flaps	4000	4000	4000
L1 P–FUELFILTER DIFF	33	Diff. Pressure to hi	Alarm	check Filter			2000
L1 IUE2	34	not used					
QUICK FLAPS CLOSED	35	Engine Overspeed	Engine–Stop	Open Air Flaps		2000	
L1 SPEED DEMAND AN.	36	not used					
L2 SPEED DEMAND AN.	37	not used					
L1 P-OIL B. FILTER	38	Oil–Pressure before Filter to high	Alarm		Mega		
L2 P-OIL B. FILTER	39	Oil–Pressure before Filter to high	Alarm		Mega		
L1 P-OIL L. BEARING	40	Oil–Pressure last Lager to low	Alarm		Mega		
L2 P-OIL L. BEARING	41	Oil–Pressure last Lager to low	Alarm		Mega		
L1 ANALOG LOAD PULSE	42	not used					
L2 ANALOG LOAD PULSE	43	not used					
L1 LEVEL INTERCOOLER	44	Limit to low	Alarm	check Cooling water level			X
L2 LEVEL INTERCOOLER	45	Limit to low	Engine–Stop	check Cooling water level			X
LEVEL LUB OIL LOW	46	Oil Level to low	Alarm	check Oil System, Refill Pump		2000	
LEVEL LUB OIL HIGH	47	Oil Level to high	Alarm	check Oil System,		2000	
L1 P-LUB Oil REFILP	48	Luboil. REFIL Pressure to low	Alarm	Engine Documentation		2000	
L2 P-LUB Oil REFILP	49	Luboil REFIL Pressure to low	Engine–Stop	Engine Documentation		2000	
L1 COOLANT LEVEL EXT	50						
L1 T–LUBE OIL	51	Oil Temperature to high	Alarm	reduce Power	X	X	X
L2 T–LUBE OIL	52	no Limit Monitoring					
L1 T-INTAKE AIR	53						
L2 T-INTAKE AIR	54						
L1 T-TE10	55	Free Channel					
L2 T-TE10	56	Free Channel					
L1 P–COOLANT	57	Coolant Pressure to low	Alarm	check Coolant System	X	X	X
L2 P–COOLANT	58	Coolant Pressure to low	Engine–Stop (progr.)	check Coolant System	X	X	X
L1 P-INTERCOOLER	59						
L2 P-INTERCOOLER	60						
L1 P-FUEL B.FILTER	61	Fuel pressure before Filter to high			Mega		
L2 P-FUEL B.FILTER	62	Fuel pressure before Filter to high			Mega		
L1 P–CRANKCASE	63	Crankcase pressure to high	Alarm	Service	4000	4000	4000
L2 P–CRANKCASE	64	Crankcase pressure to high	Engine–Stop	Service			

Katolight Service - Master Repair Manual - Page 3195

Error Denomination	Error-Code	Error Cause	Reaction of the System	Tips for troubleshooting	Application M	R	G
L1 P–FUEL	65	Fuel Input pressure to low	Alarm	Fuel low pressure part	X	X	X
L2 P–FUEL	66	no Limit Monitoring					
L1 T–COOLANT	67	CoolantTemperature to high	Alarm	reduce Power	X	X	X
L2 T–COOLANT	68	CoolantTemperature to high	reduce of Speed Demand	reduce Power	X	X	X
L1 T–EXTERN 1	69	Limit 1 , out of range	Alarm	Depending on the project datas		X	X
L2 T–EXTERN 1	70	Limit 2 , out of range	Alarm, Engine–Stop	Depending on the project datas		X	X
L1 T–EXTERN 2	71	Limit 1 , out of range	Alarm	Depending on the project datas		X	X
L2 T–EXTERN 2	72	Limit 2 , out of range	Alarm, Engine–Stop	Depending on the project datas		X	X
L1 P–EXTERN 1	73	Limit 1 , out of range	Alarm	Depending on the project datas		X	X
L2 P–EXTERN 1	74	Limit 2 , out of range	Alarm, Engine–Stop	Depending on the project datas		X	X
L1 P–EXTERN 2	75	Limit 1 , out of range	Alarm	Depending on the project datas		X	X
L2 P–EXTERN 2	76	Limit 2 , out of range	Alarm, Engine–Stop	Depending on the project datas		X	X
LIN EXT.COOLANT LEV.	77	Binary Signal 1 Plant active	Alarm, Engine–Stop	Depending on the project datas		X	X
LIN INTERCOOLER LEV.	78	Binary Signal 2 Plant active	Alarm, Engine–Stop	Depending on the project datas		X	X
L Bin–EXTERN 3	79	Binary Signal 3 Plant active	Alarm, Engine–Stop	Depending on the project datas		X	X
L Bin–EXTERN 4	80	Binary Signal 4 Plant active	Alarm, Engine–Stop	Depending on the project datas		X	X
RAIL LEAKAGE	81	to low Pressure gradient at the Start or to high Pressure grad. on Stop		High pressure system leakage, Air in System			
RAIL PRESSURE HIGH	82	Railpressure > Demand	DBR–Reduduction delay of Start Inject.	Wiring of the Saugdrossel *B48*			
RAIL PRESSURE LOW	83	Railpressure < Demand	DBR–Reduduction	Saugd. defect or Leakage in High pressure system			
L1 T-TE4	84	Free Channel					
L2 T-TE4	85	Free Channel					
L1 T-TE6	86	Free Channel					
L2 T-TE6	87	Free Channel					
Spare	88	not used			Mega		
Spare	89	not used			Mega		
IDLE SPEED LOW	90	Engine Speed 600 RPM not reached	Alarm, Start interrupt	check on additional messages		X	X
RUN UP SPEED LOW	91	Engine Speed 300 RPM not reached	Alarm, Start interrupt	check on additional messages		X	X
START SPEED LOW	92	Engine Speed 80 RPM not reached	Alarm, Start interrupt	Starter is not turning or to slow turning		X	X
PREHEAT TEMP. LINIT2	93	Coolant Temperature to low	Alarm, Start interrupt	Preheating Temperature not reached Start interlock possible		X	X
PREHEAT TEMP. LINIT1	94	Coolant Temperature to low	Alarm,	Preheating Temperature not reached		X	X

Katolight Service - Master Repair Manual - Page 3196

Error Denomination	Error-Code	Error Cause	Reaction of the System	Tips for troubleshooting	Application M	R	G
Spare	95	not used					
Spare	96	not used					
Spare	97	not used					
Spare	98	not used					
LIMIT FAILURE	99						
EDM NOT VALID	100	Checksum Fault EDM		Switch ECU OFF / ON, if fault still valid --> Service–	X	X	X
IDM NOT VALID	101	Checksum Fault IDM		Switch ECU OFF / ON, if fault still valid --> Service–	X	X	X
INVALID FUEL CONS. 1	102	Consumption Monitoring 1 not valid (EDM)		Switch ECU OFF / ON, if fault still valid --> Service–	X	X	X
INVALID FUEL CONS. 2	103	Consumption Monitoring 2 not valid (EDM)		Switch ECU OFF / ON, if fault still valid --> Service–	X	X	X
OP HOURS1 NOT VALID	104	Checksum Fault		Switch ECU OFF / ON, if fault still valid --> Service–	X	X	X
OP HOURS2 NOT VALID	105	Checksum Fault		Switch ECU OFF / ON, if fault still valid --> Service–	X	X	X
ERR REC1 NOT VALID	106	Checksum Fault		Switch ECU OFF / ON, if fault still valid --> Service–	X	X	X
ERR REC2 NOT VALID	107	Checksum Fault		Switch ECU OFF / ON, if fault still valid --> Service–	X	X	X
L1 SUPPLY VOLT. LOW	118	Supply Voltage lower than 18V	Reduction DBR * 0,8 SB 5° to late	check Battery / Generator	X	X	X
L2 SUPPLY VOLT. LOW	119	Supply Voltage lower than 14V	Reduction DBR * 0,8 SB 5° to late	check Battery / Generator	X	X	X
L1 SUPPLY VOLT. HIGH	120	Supply Voltage above 32 Volt	Reduction DBR * 0,8 SB 5° to late	check Battery / Generator	X	X	X
L2 SUPPLY VOLT. HIGH	121	Supply Voltage above 36 Volt	Engine –Stop	check Battery / Generator	X	X	X
L1 T–ELECTRONIC	122	ECU Temperature > Limit 1		Electronic–Umgebung check (electronic to hot)	X	X	X
15V POSECU DEFECT	134	internal Electronic Fault	Engine–Stop	Electronic defect	X	X	X
15V NEGECU DEFECT	136	internal Electronic Fault	Engine–Stop	Electronic defect	X	X	X
L1 5V BUFFER TEST	137	Pressure–SensorFault, Pressure–Sensor wiring or internal Electronic Fault		Pressure–Sensor, Wiring or Electronic defect			
SENSOR POWER DEFECT	138	Pressure–SensorFault, Pressure–Sensorwiring or internal Electronic Fault		Pressure–Sensor, Wiring or Electronic defect	X	X	X
L1 TE BUFFER TEST	139	internal ElectronicFault	Sensordefect–Alarm für abhängige Sensoren	Electronic defect	X	X	X

Katolight Service - Master Repair Manual - Page 3197

Error Denomination	Error-Code	Error Cause	Reaction of the System	Tips for troubleshooting	Application M	R	G
TE BUF.ECU DEFECT	140	internal ElectronicFault	Sensordefect–Alarm for depending sensors	Electronic defect	X	X	X
BANK1ECU DEFECT	142	internal ElectronicFault	Engine not startet	Electronic defect , Test only on stopped Engine	X	X	X
BANK2ECU DEFECT	144	internal ElectronicFault	Engine not startet	Electronic defect , Test only on stopped Engine	X	X	X
15V_GOODECU DEFECT	145	internal ElectronicFault	Engine–Stop	Electronic defect	X	X	X
AD–TEST1ECU DEFECT	147	internal ElectronicFault	Engine–Stop	Electronic defect	X	X	X
AD–TEST2ECU DEFECT	149	internal ElectronicFault	Engine–Stop	Electronic defect	X	X	X
AD–TEST3ECU DEFECT	151	internal ElectronicFault	Engine–Stop	Electronic defect	X	X	X
MI MODULE FAIL	170	Modul in Maintanance indicator defect	Alarm	Switch ECU OFF / ON, if fault still valid --> Service–	X	X	X
MI NOT ACTIVE	171	WI not active anymore	Alarm	Switch ECU OFF / ON, if fault still valid --> Service–	X	X	X
TBO EXPIRED	172	TBO expired	Alarm	Engine Service	X	X	X
MODULE WRITE LIMIT	173	EEPROM write limit reached	Alarm	Electronic–Service	X	X	X
CAN1 NODE LOST	180	If at least one from the ECU monitored Alive PDU on CAN 1 is missed	No function of connected unit	Test of the CAN connected devices	X	X	X
CAN2 NODE LOST	181	If at least one from the ECU monitored Alive PDU on CAN 2 is missed	No function of the connected Unit	Test of the CAN connected devices	X	X	X
CAN NO PU–DATA	183	If a CAN Modul is selected, which need the initial values of the PU-data-modul and no valid PU-Datamodul is found		Test of the CAN connected devices New download by BDM	X	X	X
CAN PU–DATA EE–FAIL	184	If you try to copy the received PU-Datamodul into the two EEPROM–Moduls and in one ore both of the moduls occured a copy fault		IDM defect, Electronic–Service	X	X	X
CAN LESS MAILBOXES	185			IDM defect, Electronic–Service	X	X	X
CAN1 BUS OFF	186	CAN–Controller 1 is in Bus–Off Tolevel.	Automatic switchover to CAN2	Caused by Short Circuit, sirious BUS trouble or Baudrateb is not compatible	X	X	X
CAN1 ERROR PASSIVE	187	CAN–Controller 1		Ursachen sind z.B. fehlende tohörende Knoten, leichte Störungen or kurzzeitige Busüberlastung	X	X	X
CAN2 BUS OFF	188	CAN–Controller 2 isin Bus–Off Tolevel.	Automatisches Umschalten auf CAN1	Ursachen sind z. B. Short Circuit, massive Störungen or Baudraten–Inkompatibilität	X	X	X
CAN2 ERROR PASSIVE	189	CAN–Controller 2		Ursachen sind z.B. fehlende tohörende Knoten, leichte Störungen or kurzzeitige Busüberlastung	X	X	X

Katolight Service - Master Repair Manual - Page 3198

Error Denomination	Error-Code	Error Cause	Reaction of the System	Tips for troubleshooting	Application M	R	G
SD T–COOLANT	201	Sensor defect, Short Circuit or Cable breakage	Limit–Monitoring inactive	Wiring und Sensor to *B6* check	X	X	X
SD T–FUEL	202	Sensor defect, Short Circuit or Cable breakage	Limit–Monitoring inactive	Wiring und Sensor to *B33* check	X	X	X
SD T–CHARGE AIR	203	Sensor defect, Short Circuit or Cable breakage	Limit–Monitoring inactive	Wiring und Sensor to *B9* check	X	X	X
SD T–COOLANT INTERC.	205	Sensor defect, Short Circuit or Cable breakage	Limit–Monitoring inactive	Wiring und Sensor to *B26* check			X
SD T–EXHAUST A	206	Sensor defect, Short Circuit or Cable breakage	Limit–Monitoring inactive	Wiring und Sensor to *B4.21* check	X	X	
SD T–EXHAUST B	207	Sensor defect, Short Circuit or Cable breakage	Limit–Monitoring inactive	Wiring und Sensor to *B4.22* check	X	X	
SD P–CHARGE AIR	208	Sensor defect, Short Circuit or Cable breakage	Begrentong inactive	Wiring und Sensor to *B10* check	X	X	X
SD P–LUBE OIL	211	Sensor defect, Short Circuit or Cable breakage	Limit–Monitoring inactive	Wiring und Sensor to *B5* check	X	X	X
SD P–COOLANT	212	Sensor defect, Short Circuit or Cable breakage	Limit–Monitoring inactive	Wiring und Sensor to *B16* check	X		
SD P–CRANKCASE	214	Sensor defect, Short Circuit or Cable breakage	Limit–Monitoring inactive	Wiring und Sensor to *B50* check	4000	4000	4000
SD P–RAIL FUEL	215	Sensor defect, Short Circuit or Cable breakage	HD–Regler Notbetrieb	Wiring und Sensor to *B48* check	4000	4000	4000
SD T–LUBE OIL	216	Sensor defect, Short Circuit or Cable breakage	Limit–Monitoring inactive	Wiring und Sensor to *B7* check	X	X	X
SD T-TE10	217	Free Channel					
SD POil last Bearing	218	Sensor defect, Short Circuit or Cable breakage	Limit–Monitoring inactive	Wiring und Sensor to *B5.3* check			
SD T–INTAKE AIR	219	Sensor defect, Short Circuit or Cable breakage	Limit–Monitoring inactive	Wiring und Sensor to *B3* check	X	X	
SD COOLANT LEVEL	220	Sensor defect, Short Circuit or Cable breakage	Limit–Monitoring inactive	Wiring und Sensor to *F33* check	X	X	X
SD LEVEL LEAKAGEFUEL	222	Sensor defect, Short Circuit or Cable breakage	Limit–Monitoring inactive	Wiring und Sensor to *F46* check	X		X
SD LEVEL INTERCOOLER	223	Sensor defect, Short Circuit or Cable breakage	Limit–Monitoring inactive	Wiring und Sensor to *B27* check			X
SD P-LUBOil REFILLP.	224	Sensor defect, Short Circuit or Cable breakage	Limit–Monitoring inactive	Wiring und Sensor to ... check		2000	

Katolight Service - Master Repair Manual - Page 3199

Error Denomination	Error-Code	Error Cause	Reaction of the System	Tips for troubleshooting	Application M	R	G
SD LEVEL LUB OIL	225	Sensor defect, Short Circuit or Cable breakage	Limit–Monitoring inactive	Wiring und Sensor to ... check		2000	
SD LEVEL LEAK.FUEL B	226	Sensor defect, Short Circuit or Cable breakage	Limit–Monitoring inactive	Wiring und Sensor to *F46.2* check			
SD P-OIL B. FILTER	227	Sensor defect, Short Circuit or Cable breakage	Limit–Monitoring inactive	Wiring und Sensor to *B5.1* check			
SD P-FUEL B. FILTER	228	Sensor defect, Short Circuit or Cable breakage	Limit–Monitoring inactive	Wiring und Sensor to *B34.2* check			
SD CRANKSHAFT SPEED	230	Sensor defect, Short Circuit or Cable breakage		Wiring und Sensor to *B13* check	X	X	X
SD CAMSHAFT SPEED	231	Sensor defect, Short Circuit or Cable breakage		Wiring und Sensor to *B1* check	X	X	X
SD CHARGER SPEED 1	232	Sensor defect, Short Circuit or Cable breakage	Charger wird togeschaltet	Wiring und Sensor to *B44* check Ablevel des Sensors check	X	X	
SD CHARGER SPEED 2	233	Free Channel					
SD CHARGER SPEED 3	234	Free Channel					
SD CHARGER SPEED 4	235	Free Channel					
SD T-TE4	236	Free Channel					
SD T-TE6	237	Free Channel					
SD P–FUELFILTER DIFF	239						
SD P–FUEL	240	Sensor defect, Short Circuit or Cable breakage	Limit–Monitoring inactive	Wiring und Sensor to *B34* check	X	X	
SD POWER SUPPLY	245	internal ECU Fault		Electronic defect	X	X	X
SD T–ELECTRONIC	246	internal ECU Fault		Electronic defect	X	X	X
SD CAN STOP	249	Missing Data CAN	kein Engine–Stop über CAN	Electronic–Service	X	X	X
SD CAN SPEED DEMAND	250	Missing Data CAN	Speed Demand not valid	Take the command to the RCS directly after power on, if fault still valid ⇒ Electronic–Service	X	X	X
SD CAN UP/DOWN	251	Missing Data CAN	No Änderung der Speed Demand	Electronic–Service	X	X	X
SD CAN NOTCH POS.	252	Missing Data CAN	Step 0 in use	Electronic–Service		X	
SD CAN OVERRIDE	253	Missing Data CAN	function not possible activate	Electronic–Service	X	X	X
SD CAN TEST OVERSP	254	Missing Data CAN	function not possible to activate	Electronic–Service	X	X	X

Katolight Service - Master Repair Manual - Page 3200

Error Denomination	Error-Code	Error Cause	Reaction of the System	Tips for troubleshooting	Application M	R	G
SD CAN ENGAGE SIGNAL	255	Missing Data CAN	function not possible to activate	Electronic–Service	X	X	
SD CAN CYL. CUTOUT	256	Missing Data CAN	function not possible to activate	Electronic–Service	X	X	
SD CAN LOCAL	257	Missing Data CAN	function not possible to activate	Electronic–Service	X	X	
SD CAN RCS ENGAGE S.	258	Missing Data CAN	function not possible to activate	Electronic–Service	X		
SD CAN RCS CYL.CUT.	259	Missing Data CAN	function not possible to activate	Electronic–Service	X		
SD 15V POS SUPPLY	260	internal ECU Fault		Electronic defect	X	X	X
SD 15V NEG SUPPLY	261	internal ECU Fault		Electronic defect	X	X	X
SD 5V BUFFER TEST	262	internal ECU Fault		Electronic defect	X	X	X
SD TE BUFFER TEST	263	internal ECU Fault		Electronic defect	X	X	X
SD BANK 1 TEST	264	internal ECU Fault		Electronic defect	X	X	X
SD BANK 2 TEST	265	internal ECU Fault		Electronic defect	X	X	X
SD SPEED DEMAND AN.	266	Control Lever defect or Short Circuit, Cable breakage tom Control Lever	Speed Demand not valid	Control Lever / Wiring check Electronic–Service	X	X	X
SD SP.DEM.TEST BENCH	267	Short Circuit, Cable breakage	Speed Demand not valid	Sensor / Wiring check nur in Prüflevelsbetrieb	X	X	X
SD SPINOUT	268	Short Circuit, Cable breakage Schleuderschutzgerät defect	function not possible to activate	Sensor / Wiring check Electronic–Service		X	
SD LOAD PULSE ANALOG	269	Short Circuit, Cable breakage Load–Pulse–Unit defect	function not possible to activate	Sensor / Wiring check Electronic–Service			X
SD SPEED DEMAND FI1	270	Short Circuit, Cable breakage, Sturdy Plant defect	Speed Demand not valid	Sensor / Wiring check Electronic–Service (DDC)	X		
SD T–EXTERN 1	271	Missing Data CAN		Electronic–Service (external Unit defect)		X	X
SD T–EXTERN 2	272	Missing Data CAN		Electronic–Service (external Unit defect)		X	X
SD P–EXTERN 1	273	Missing Data CAN		Electronic–Service (external Unit defect)		X	X
SD P–EXTERN 2	274	Missing Data CAN		Electronic–Service (external Unit defect)		X	X
MD EXT.COOLANT LEVEL	275	Missing Data CAN		Electronic–Service (external Unit defect)		X	X
MD INTERCOOLER LEVEL	276	Missing Data CAN		Electronic–Service (external Unit defect)		X	X
MIS–DATA BIN–EXT. 3	277	Missing Data CAN		Electronic–Service (external Unit defect)		X	X
MIS–DATA BIN–EXT. 4	278	Missing Data CAN		Electronic–Service (external Unit defect)		X	X
SD CAN RES TRIP FUEL	279	Missing Data CAN		Electronic–Service	X	X	X
SD CAN ALARM RESET	280	Missing Data CAN		Electronic–Service	X	X	X

Katolight Service - Master Repair Manual - Page 3201

Error Denomination	Error-Code	Error Cause	Reaction of the System	Tips for troubleshooting	Application M	R	G
SD AD–TEST1 SUPPLY	281	internal ECU Fault		Electronic defect	X	X	X
SD AD–TEST2 SUPPLY	282	internal ECU Fault		Electronic defect	X	X	X
SD AD–TEST3 SUPPLY	283	internal ECU Fault		Electronic defect	X	X	X
SD CAN LAMP TEST	284	Missing Data CAN		Electronic–Service		X	X
SD CAN IDLE REQ SER	285	Missing Data CAN		Electronic–Service		X	
SD CAN IDLE REQ	286	Missing Data CAN		Electronic–Service		X	
SD TURBO SW LOCK SER	287	Missing Data CAN		Electronic–Service		X	
SD CAN TURBO SW LOCK	288	Missing Data CAN		Electronic–Service		X	

Katolight Service - Master Repair Manual - Page 3202

Magnetic Valve related FPGA–Faultmessages and ECU–Reactions
(valid for FPGA MA 00-4 / ASIC MA 1004 / ECU-C2)

FPGA–Fault-No.	Denomination	Reason	Reaction o f the ECU	ECU–Fault	ECU–Fault No.
0	no Fault	everything ok	Injection normal	-	
1	PA–Circuit defect		use Default–IRT	POWER STAGE FAIL 1 POWER STAGE FAIL 2	361,362
2	no PA detected		use Default–IRT	TINING BANK1 MVxx TINING BANK2 MVxx	301..318
3	IRT–Signal not valid	MV_ON → low	use last valid IRT	---	
4	OC–Circuit defect		Bank Bank can not be used anymore*, **ENGINE–STOP**	STOP POWER STAGE 1 STOP POWER STAGE 2	363,364
5	Current controler defect	MV_ON → high	Bank Bank can not be used anymore*, **ENGINE–STOP**	STOP POWER STAGE 1 STOP POWER STAGE 2	363,364
6	+MV–Masseschluß	KS MV+ → Ground	MV defect	WIRING BANK1 MVxx WIRING BANK2 MVxx	321..338
7	MV–Short Circuit	KS MV+ → MV-	MV defect	WIRING BANK1 MVxx WIRING BANK2 MVxx	321..338
8	MV–Interrupt	OL MV+ → MV-	MV defect	OPEN_LOAD BANK1 MVx OPEN_LOAD BANK2 MVx	341..358
9	Selekt–Transistor Short Circuit		Bank Bank can not be used anymore*, **ENGINE–STOP**	STOP POWER STAGE 1 STOP POWER STAGE 2	363,364
10	-MV–short to ground	KS MV- → Ground	Bank Bank can not be used anymore*, **ENGINE–STOP**	STOP MV–WIRING	365, 321..338
11	Freilauf–Transistor Short Circuit	Voltage on MV < 8V	DBR–Wert x 0,7 ! (Istmenge > calculated amount)*	POWER STAGE FAIL 1 POWER STAGE FAIL 2	361,362
12	Power–Fail	15V-Supply < 11V	(Power Stage defect)*, **ENGINE–STOP**	STOP POWER STAGE 1 STOP POWER STAGE 2	363,364
13	-	-	-	-	
14	-	-	-	-	
15	RESET	RESET–Pin was low	FPGA initial*	-	

Katolight Service - Master Repair Manual - Page 3203

Katolight Service - Master Repair Manual - Page 3204

Technical Publication

MDEC
Engine Control System
BR 2000 / BR 4000
Stationary generator engines

- **Structure and function**
- **Operation**
- **Maintenance and repair**
- **Operating personnel**
- **Plant personnel**

Documentation Parts 1, 2, 3

E 531 711 / 01 E

DETROIT DIESEL

mtu

MTU assuring you:

- **ISO 9001 certification**
  Quality assurance in design/development, production, installation and service
- **CE conformity**
  - Guideline 73/23/EEC – Low voltage guideline –
    dated February 19, 1973 with amendment dated July 22, 1993
    (guideline 93/68/EEC)
  - Guideline 89/336/EEC – Guideline on electromagnetic compatibility –
    dated May 3, 1989 with amendment dated April 28, 1992
    (guideline 92/31/EEC)

    CE conformity is influenced if the product is installed incorrectly, an assembly or system is misused and/or genuine MTU components are not used.

Printed in Germany
© 2002 Copyright MTU Friedrichshafen GmbH
Diese Veröffentlichung einschließlich aller seiner Teile ist urheberrechtlich geschützt. Jede Verwertung oder Nutzung bedarf der vorherigen schriftlichen Zustimmung der MTU Friedrichshafen GmbH. Das gilt insbesondere für Vervielfältigung, Verbreitung, Bearbeitung, Übersetzung, Mikroverfilmungen und die Einspeicherung und / oder Verarbeitung in elektronischen Systemen, einschließlich Datenbanken und Online-Diensten.
Das Handbuch ist zur Vermeidung von Störungen oder Schäden beim Betrieb zu beachten und daher vom Betreiber dem jeweiligen Wartungs- und Bedienungspersonal zur Verfügung zu stellen.
Änderungen bleiben vorbehalten.

Printed in Germany
© 2002 Copyright MTU Friedrichshafen GmbH
This Publication is protected by copyright and may not be used in any way whether in whole or in part without the prior written permission of MTU Friedrichshafen GmbH. This restriction also applies to copyright, distribution, translation, microfilming and storage or processing on electronic systems including data bases and online services.
This handbook is provided for use by maintenance and operating personnel in order to avoid malfunctions or damage during operation.
Subject to alterations and amendments.

Imprimé en Allemagne
© 2002 Copyright MTU Friedrichshafen GmbH
Tout droit réservé pour cet ouvrage dans son intégralité. Toute utilisation ou exploitation requiert au préalable l'accord écrit de MTU Friedrichshafen GmbH. Ceci s'applique notamment à la reproduction, la diffusion, la modification, la traduction, l'archivage sur microfiches, la mémorisation et / ou le traitement sur des systèmes électroniques, y compris les bases de données et les services en ligne.
Le manuel devra être observé en vue d'éviter des incidents ou des endommagements pendant le service. Aussi recommandons-nous à l'exploitant de le mettre à la disposition du personnel chargé de l'entretien et de la conduite.
Modifications réservées.

Impreso en Alemania
© 2002 Copyright MTU Friedrichshafen GmbH
Esta publicación se encuentra protegida, en toda su extensión, por los derechos de autor. Cualquier utilización de la misma, así como su reproducción, difusión, transformación, traducción, microfilmación, grabación y/o procesamiento en sistemas electrónicos, entre los que se incluyen bancos de datos y servicios en línea, precisa de la autorización previa de MTU Friedrichshafen GmbH.
El manual debe tenerse presente para evitar fallos o daños durante el servicio, y, por dicho motivo, el usario debe ponerlo a disposición del personal de mantenimiento y de servicio.
Nos reservamos el derecho de introducir modificaciones.

Stampato in Germania
© 2002 Copyright MTU Friedrichshafen GmbH
Questa pubblicazione è protetta dal diritto d'autore in tutte le sue parti. Ciascun impiego od utilizzo, con particolare riguardo alla riproduzione, alla diffusione, alla modifica, alla traduzione, all'archiviazione in microfilm ed alla memorizzazione od all'elaborazione in sistemi elettronici, comprese banche dati e servizi on line, deve essere espressamente autorizzato per iscritto dalla MTU Friedrichshafen GmbH.
Il manuale va consultato per evitare anomalie o guasti durante il servizio, per cui va messo a disposizione dall' utente al personale addetto alla manutenzione e alla condotta.
Con riserva di modifiche.

General information about documentation

Documentation structure

Documentation Part	Title/contents	Target group(s)
1	Structure and function	Operating personnel etc.
2	Operation	Operating personnel
3	Maintenance and repair	Plant personnel
4	Service manual	Electronic service personnel
5	Illustrated parts catalog	Operating personnel, electronic service personnel, logistics personnel
6	Plant-specific configuration	Electronic service personnel, installation personnel, start-up personnel
7	Mechanical and electrical installation	Installation personnel (electromechanical/mechatronic engineer)
8	Initial start-up	Start-up personnel

Note: Not all parts of the documentation are written for every product.

Required knowledge

To understand each part of the documentation, we recommend reading the preceding parts, if applicable.

Reference numbers and reference lines

Details in figures are provided with reference numbers and reference lines if necessary.

If reference is made in the text to a detail provided with a reference number, the figure number and, separated by an oblique, the reference number of the detail are written in brackets. Example: (5/2) means fig. 5, reference number 2.

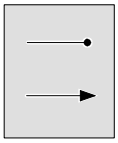

A point at the end of the reference line means that the detail is visible in the figure.

An arrow at the end of the reference line indicates that the detail cannot be seen in the figure.

Symbols

The symbols used in safety notes are defined in the chapter “Safety requirements”.

Katolight Service - Master Repair Manual - Page 3207



This symbol indicates cross-references to other manuals.



This symbol indicates important information.

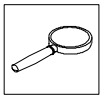

This symbol indicates detailed information.



Further troubleshooting or fault rectification requires mechanical work to be performed on other assemblies or equipment with reference to the relevant documentation.



Further troubleshooting or fault rectification requires work to be performed on the engine with reference to the engine documentation.



Rectification of a fault marked with this symbol either requires the customer's service personnel or service personnel provided by MTU. The affected assembly may have to be sent to MTU for repairs.
Such a fault cannot be repaired by operating personnel.

Some of the chapters in this manual contain structured task descriptions. The symbols used here are explained at the relevant points by associated sub-titles.

ID numbers

Some of the chapters in this manual contain structured task and activity descriptions. Each task and each activity is assigned an unambiguous identification number (ID no.). This number is structured as follows *X-X-XXX-xxxx* whereby:

1st figure:	Either "T" for "Task" or "A" for "Activity"
2nd figure:	System affected (examples: "M" for MCS, "R" for RCS)
3rd – 5th figure:	Unit or assembly (generally corresponding to MTU type designations, whereby version numbers are omitted)
6th – 9th figure:	Serial number (when 1st – 5th figures are identical)

Asterisks ("wildcards") "N" (for none) may be used for the 1st to 5th figures when a task/activity is generally applicable to all systems/devices.

Qualification of users of the manual

Abbreviations are used in the manual to indicate qualification of personnel who may carry out the tasks/activities concerned. The abbreviations refer to the course types available in the MTU training program for the product concerned and have the following meaning:

E1	The user must have completed a course aimed at operating personnel or have equivalent knowledge. No metrological requirements are made.
E2	The user must have completed a course aimed at plant personnel or have equivalent knowledge.
E3	The user must have completed a course aimed at service personnel (electronics).
E4	The user must have completed a course aimed at start-up personnel (electronics).

Katolight Service - Master Repair Manual - Page 3208

Part 1

Structure and function

(This page intentionally blank)

Katolight Service - Master Repair Manual - Page 3210

Table of contents

1	**Structure and function**	**1**
1.1	Use	1
1.2	Features	2
1.3	Structure	3
1.3.1	Structure of Engine Control System ECS-5	4
1.3.2	Structure of Monitoring and Control System MCS-5	5
1.3.2.1	Basic scope of the MCS-5 of the MDEC for stationary generator engines	5
1.3.2.2	The devices of Engine Control System ECS-5	6
1.3.2.2.1	Engine Control Unit ECU	6
1.3.2.3	MCS-5 options of the MDEC for stationary generator engines	8
1.3.2.3.1	Peripheral Interface Modules	8
1.3.2.3.2	Display DIS	10
1.3.2.3.3	Analog display instruments	11
1.3.2.4	The devices of Monitoring and Control System MCS-5	12
1.3.2.4.1	Peripheral Interface Module PIM A 511	12
1.3.2.4.2	Peripheral Interface Module PIM A 512	14
1.3.2.4.3	Peripheral Interface Module PIM A 513	15
1.3.2.4.4	Peripheral Interface Module PIM A 515	16
1.3.2.4.5	Peripheral Interface Module PIM A 516	17
1.3.2.4.6	Peripheral Interface Module PIM A 517	18
1.3.2.4.7	Peripheral Interface Module PIM A 519	19
1.3.2.4.8	Display DIS	20
1.3.2.4.9	Display instruments	22
1.3.3	Data connections	23
1.3.4	Power supply	24
1.3.5	Earthing	24
1.3.6	Technical data	25
1.4	Functions	26
1.4.1	Operating functions on display DIS (option)	26
1.4.2	Display functions	27
1.4.2.1	Display functions of fault code display FCB in PIM A 511	27
1.4.2.2	Display functions of display DIS (option)	28
1.4.2.3	Display functions on the man-machine interface of the display (option)	29
1.4.2.3.1	General screen page structure	30
1.4.2.3.2	Overview page structure	33
1.4.2.3.3	System page stucture	34
1.4.2.3.4	Graphic page structure	35

Katolight Service - Master Repair Manual - Page 3211

Table of contents *(cont.)*

1.4.2.3.5 Measuring point list structure 36
1.4.2.3.6 Contrast page structure 37
1.4.2.3.7 Service page structure 38
1.4.2.3.8 Alarm page structure 39
1.4.2.3.9 Help page structure 42
1.4.2.4 Display functions of the display instruments (option) 43
1.4.3 Acquisition functions 44
1.4.3.1 Plant signals 44
1.4.3.1.1 Signals to Engine Control Unit ECU 44
1.4.3.1.2 Signals at PIM A 519 44
1.4.3.2 Engine signals 46
1.4.3.2.1 Sensors 46
1.4.3.2.2 Sensors on the engine 47
1.4.4 Control functions 50
1.4.4.1 Engine start 51
1.4.4.1.1 Normal engine start 51
1.4.4.1.2 Engine restart 52
1.4.4.1.3 Emergency engine start 52
1.4.4.2 Engine stop 53
1.4.4.3 Override 53
1.4.4.4 50 Hz/60 Hz switching on bi-frequency engines 53
1.4.4.5 Load pulse 53
1.4.5 Monitoring functions 54
1.4.5.1 Engine safety system 54
1.4.5.2 Combined alarm signalling 55
1.4.6 Regulating functions 56
1.4.6.1 Speed/injection regulation 56
1.4.6.2 Idle speed governor – maximum speed governor – fuel governor 57
1.4.6.3 Common Rail injection system (series 4000 only) 58
1.4.6.4 PLN injection system (series 2000 only) 59
1.4.6.5 Angle measuring/determining engine timing 60
1.4.6.6 Speed droop 61
1.4.6.6.1 Speed droop calculation 61
1.4.6.6.2 Switchable speed droop 61
1.4.6.7 Power limitation (quantity limitation) 63
1.4.6.7.1 Dynamic quantity limitation 63
1.4.6.7.2 Fixed quantity limitation 63
1.4.6.7.3 Fuel quantity control during engine starting 63
1.4.6.8 Speed setpoint handling 64

Katolight Service - Master Repair Manual - Page 3212

Table of contents *(cont.)*

1.4.7 Safety features 65
1.4.7.1 Safety shutdowns 65
1.4.7.1.1 Integral Test System (ITS) 67
1.4.7.1.2 Monitoring of the electronics in the Engine Control Unit ECU 67
1.4.7.1.3 Sensor/actuator monitoring 68
1.4.7.1.4 Bus communication monitoring 68
1.4.7.2 Overspeed test 68

Katolight Service - Master Repair Manual - Page 3213

(This page intentionally blank)

Katolight Service - Master Repair Manual - Page 3214

1 Structure and function

1.1 Use

Engine Control System MDEC for stationary generator engines is used for engine series MTU/DDC BR 4000 and DDC/MTU BR 2000. Engine management system MDEC primarily fulfills the following tasks:

- Controlling the diesel engine
- Monitoring the operating states
- Regulating feeding or speed of the diesel engine (depending of the appropriate operating state)
- Indicating incorrect operating states via fault codes (PIM A 511)

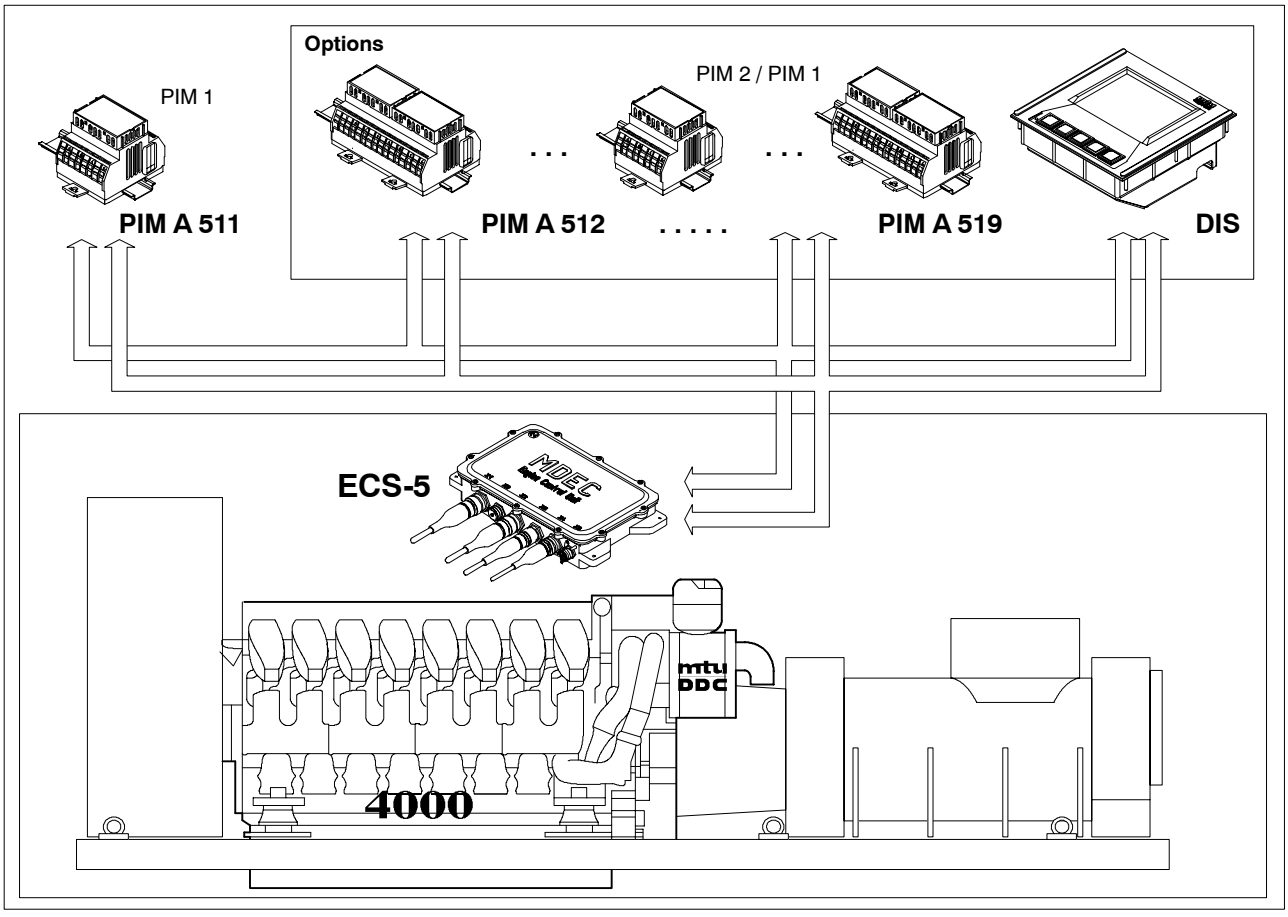

Fig. 1 : Engine Control System MDEC for stationary generator engines for genset control and monitoring

As many as 8 additional PIM Peripheral Interface Modules can be connected to superordinate systems (option). A display DIS (option) gives information about operating states in the form of bargraphs and text and signals malfunctions in the form of messages.

Katolight Service - Master Repair Manual - Page 3215

1.2 Features

Engine Control System MDEC for stationary generator engines has the following essential features:

- Can be used for engine series 2000 and 4000
- Electronic engine regulation and control
- Engine monitoring for inadmissible operating states
- Fault code display
- Connection cable for power supply of the individual devices
- Connection cable for connecting a superordinate genset control unit
- CAN bus connection to a superordinate genset control unit (option)
- Hardware interfaces to a superordinate genset control unit (option)
- Inputs for plant sensors (option)
- Indication of engine operating states and faults in plain text via LC display (option)
- Analog displays (option)
- Speed or feeding regulator depending on operating state
- Features to protect the engine leading as far as shutdown
- Integral fault diagnosis system ITS
- Integral load profile recorder
- Fully-automatic start sequence control
- 50 Hz or 60 Hz operation possible
- Speed droop switchover possible during engine operation

Katolight Service - Master Repair Manual - Page 3216

1.3 Structure

The structure of an overall MDEC system for stationary generator engines comprising the two sub-systems ECS-5 and MCS-5 depends on customer requirements and the superordinate genset control unit. The various sub-systems and their component parts are represented schematically in the figure below (fig. 2).

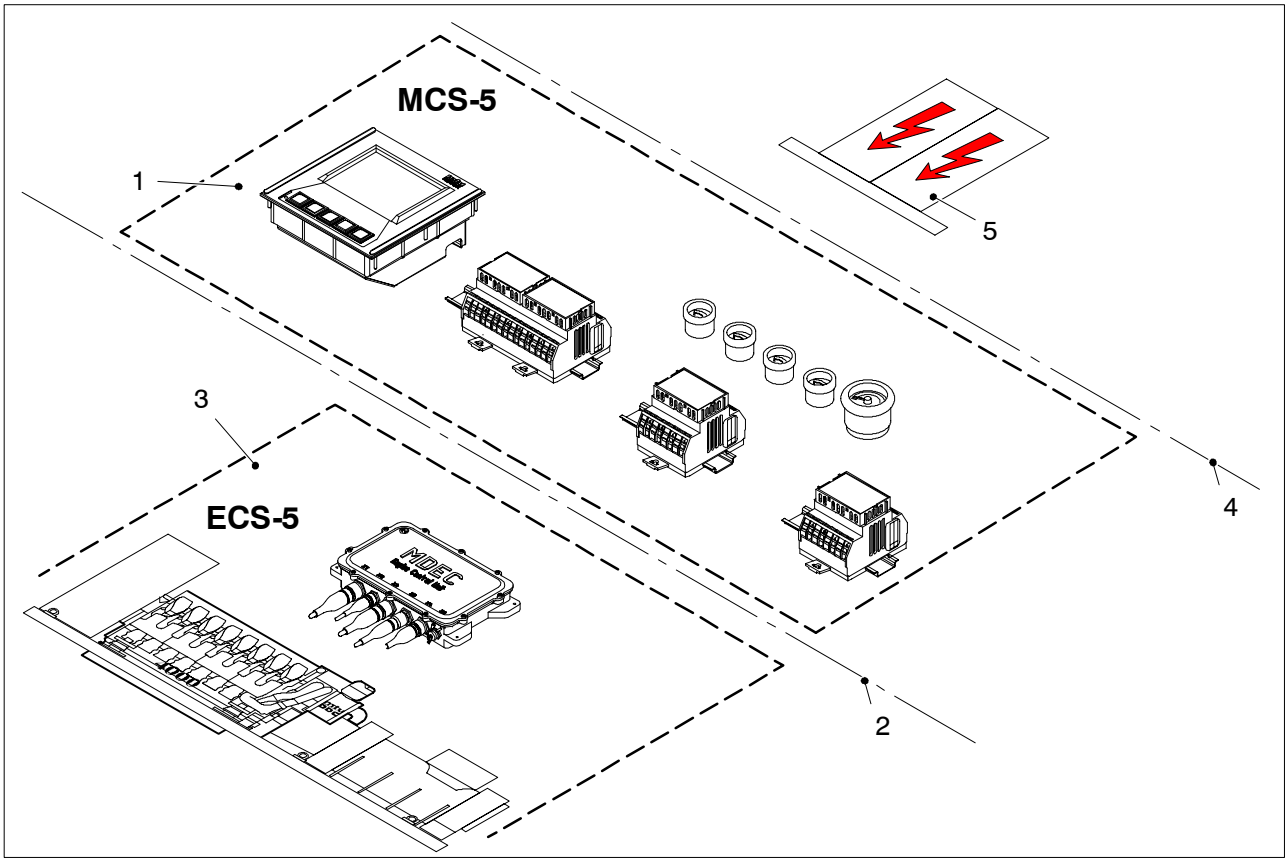

Fig. 2 : Typical configuration for an MDEC

Pos.	Name	Meaning
2/1	MCS-5	Monitoring and Control System
2/2	CAN	Demarcation lines between the systems ECS-5 and MCS-5
2/3	ECS-5	Engine Control System
2/4	RS422	Demarcation lines between the system MCS-5 and an external emergency power controller
2/5	System	External emergency power controller

1.3.1 Structure of Engine Control System ECS-5

Engine Control System ECS-5 consists of the following devices:

- Engine Control Unit ECU
- Engine sensors
- Engine actuators
- Engine injectors
- Engine cable harnesses

Note: The function of the Engine Control System ECS-5 remains the same with regard to Monitoring and Control System MCS-5 and its scope.

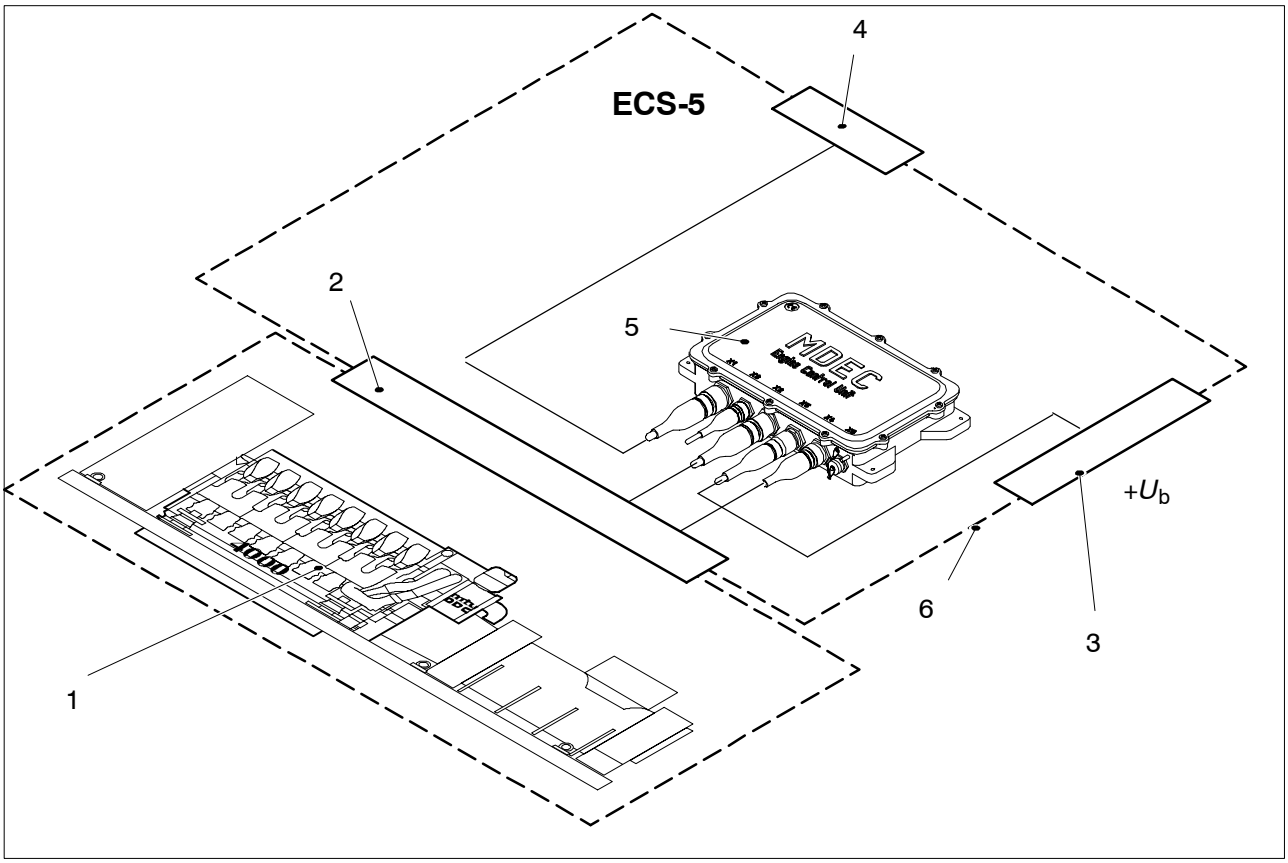

Fig. 3 : Structure of Engine Control System ECS-5

Pos.	Name	Meaning
3/1	Engine	
3/2	Engine interface	Engine cable harnesses for sensors and final control elements
3/3	+U_b	Power supply
3/4		Signal connection to MCS-5 devices and superordinate control units if applicable
3/5	ECU	Engine Control Unit
3/6	System demarcation line	ECS-5 sub-system

Katolight Service - Master Repair Manual - Page 3218

1.3.2 Structure of Monitoring and Control System MCS-5

1.3.2.1 Basic scope of the MCS-5 of the MDEC for stationary generator engines

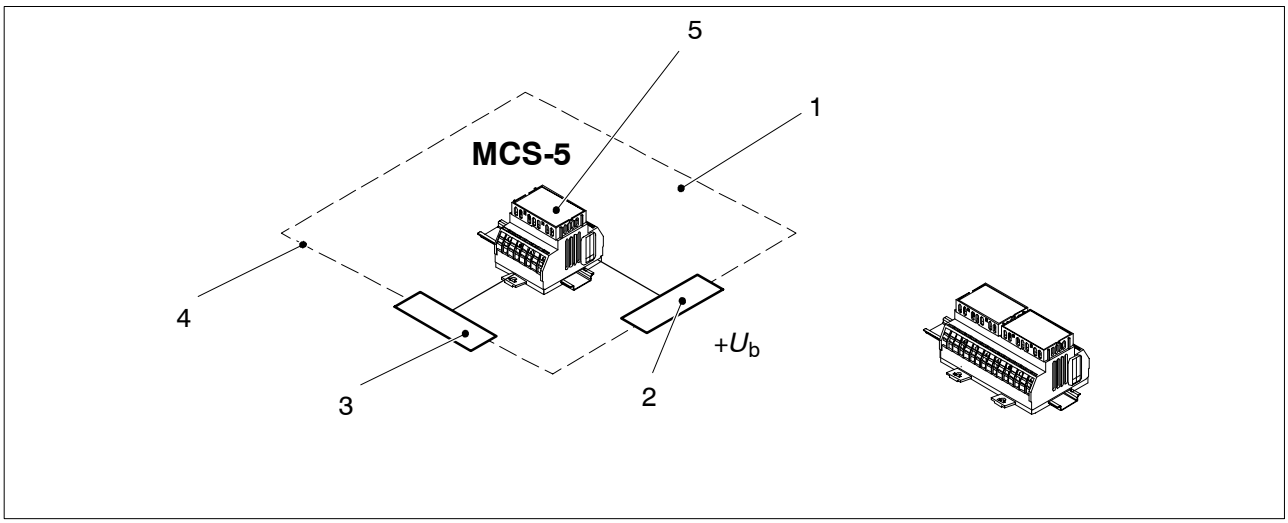

Fig. 4 : Basic scope of the MCS-5 of the MDEC for stationary generator engines

Pos.	Name	Meaning
4/1	MCS-5	
4/2	+U_b	Power supply
4/3		Signal connection to ECS-5 devices
4/4	System demarcation line	MCS-5 sub-system
4/5	PIM A 511	Peripheral Interface Module PIM 1 for fault code display

Katolight Service - Master Repair Manual - Page 3219

1.3.2.2 The devices of Engine Control System ECS-5

1.3.2.2.1 Engine Control Unit ECU

Use

The ECU assembly is a speed and injection governor for DDC/MTU series 2000 and 4000 engines. It is located directly on the engine.

Engine Control Unit ECU features:

- Control of PLN type (pump – line – nozzle) mapped individual injection systems for BR 2000 or of CR systems (Common Rail) for BR 4000 engines
- Up to 20 injection valves/injectors can be controlled
- Communication with other devices and the superordinate system is realized via CAN bus
- Self-monitoring and diagnosis
  - Integral status/fault indication
  - Fault memory
- Extensive I/O features:
  - Plant side: 13 inputs, 10 outputs, 2 serial interfaces
  - Engine side: 26 inputs, 26 outputs
- Engine and plant-specific variables in replaceable memory modules
- Diagnosis via RS232 interface for dialog unit

Structure

Engine Control Unit ECU is enclosed in a diecast housing with a screw-fitted cover.

Four mounting lugs are used to secure Engine Control Unit ECU on the engine mounting plate. The cover is attached to the housing by means of 10 Phillips screws.

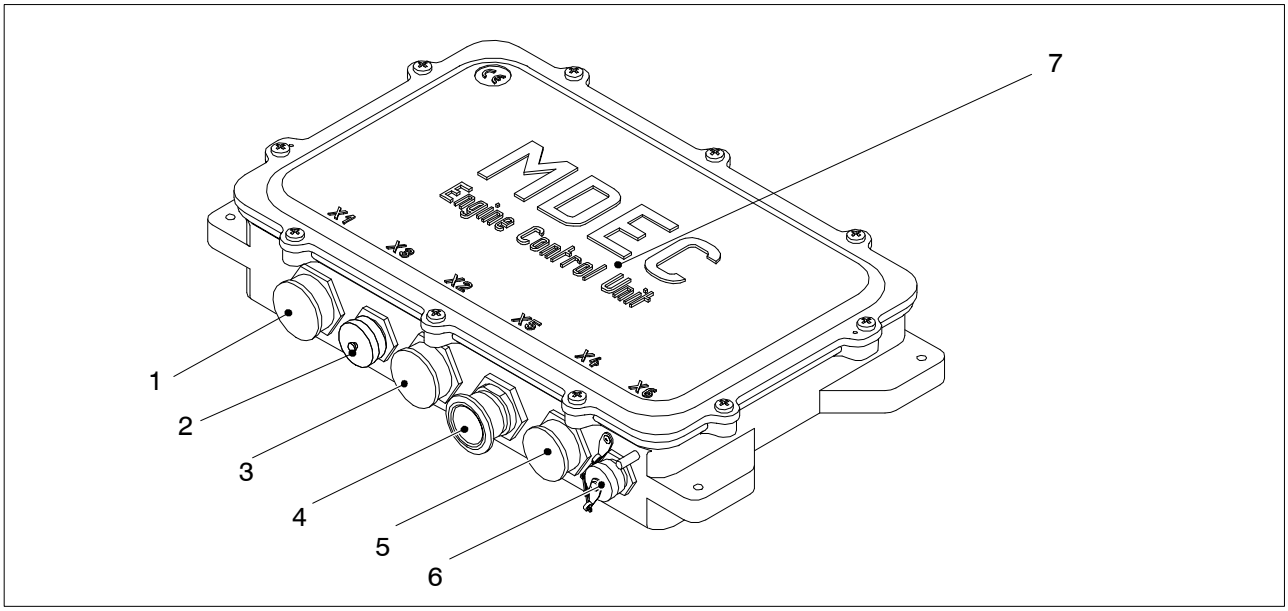

Fig. 5 : Engine Control Unit ECU

Pos.	Name	Meaning
5/1	Connector X1	Can bus connection
5/2	Connector X3	BR 2000: Not used* BR 4000: High-pressure controller
5/3	Connector X2	Engine cable harness connection
5/4	Connector X5	Operating voltage connection
5/5	Connector X4	Engine cable harness connection
5/6	Connector X6	Connection for dialog unit (optional), Notebook
5/7	Cover	–

Technical data

Dimensions *(W x H x D)*	Approx. 455 mm x 91 mm x 277 mm (without connectors) (depth + approx. 230 mm for connectors)
Operating voltage	Nominal voltage: 24 VDC Continuous voltage: 16.5 VDC ... 32 VDC Temporarily restricted operation: 11 VDC ... 36 VDC Residual ripple: Max. 8 V_{pp}
Power consumption	Max. 30 A (depending on operating state and system scope)
Operating temperature range	0 °C … +75 °C
Storage temperature range	–10 °C … +75 °C
Installation position	At the engine
Relative humidity	0 % to max. 95 %, non-condensing
Shock	15 *g*/11 ms
Vibrostability	
Frequency 2 Hz … 25 Hz:	x_{pp} = 1.6 mm
Frequency 25 Hz … 100 Hz:	$a = \pm 4\ g$
Frequency 100 Hz … 2000 Hz:	Noise 1.3 *g* rms
EMC	DIN EN 50081-2 and DIN EN 50082-2 IEC1000-4-2 IEC1000-4-3 IEC1000-4-4 IEC1000-4-5 IEC1000-4-6
Degree of protection	IP 65 DIN 40 050
Colour	As engine
Weight	7 kg

Katolight Service - Master Repair Manual - Page 3221

1.3.2.3 MCS-5 options of the MDEC for stationary generator engines

A range of options are available to allow engine management system MDEC to be adapted to suit customer-specific requirements. These options can be divided into three categories:

- Additional Peripheral Interface Modules for signal acquisition and output (these modules can be combined as required)
- A large display to indicate operating states in plain text
- Analog display instruments

CAUTION

Parameters in the ECU must be modified if additional PIMs are ordered and retrofitted after initial delivery (altered configuration).

The new (additional) devices can otherwise not be detected by the system.

1.3.2.3.1 Peripheral Interface Modules

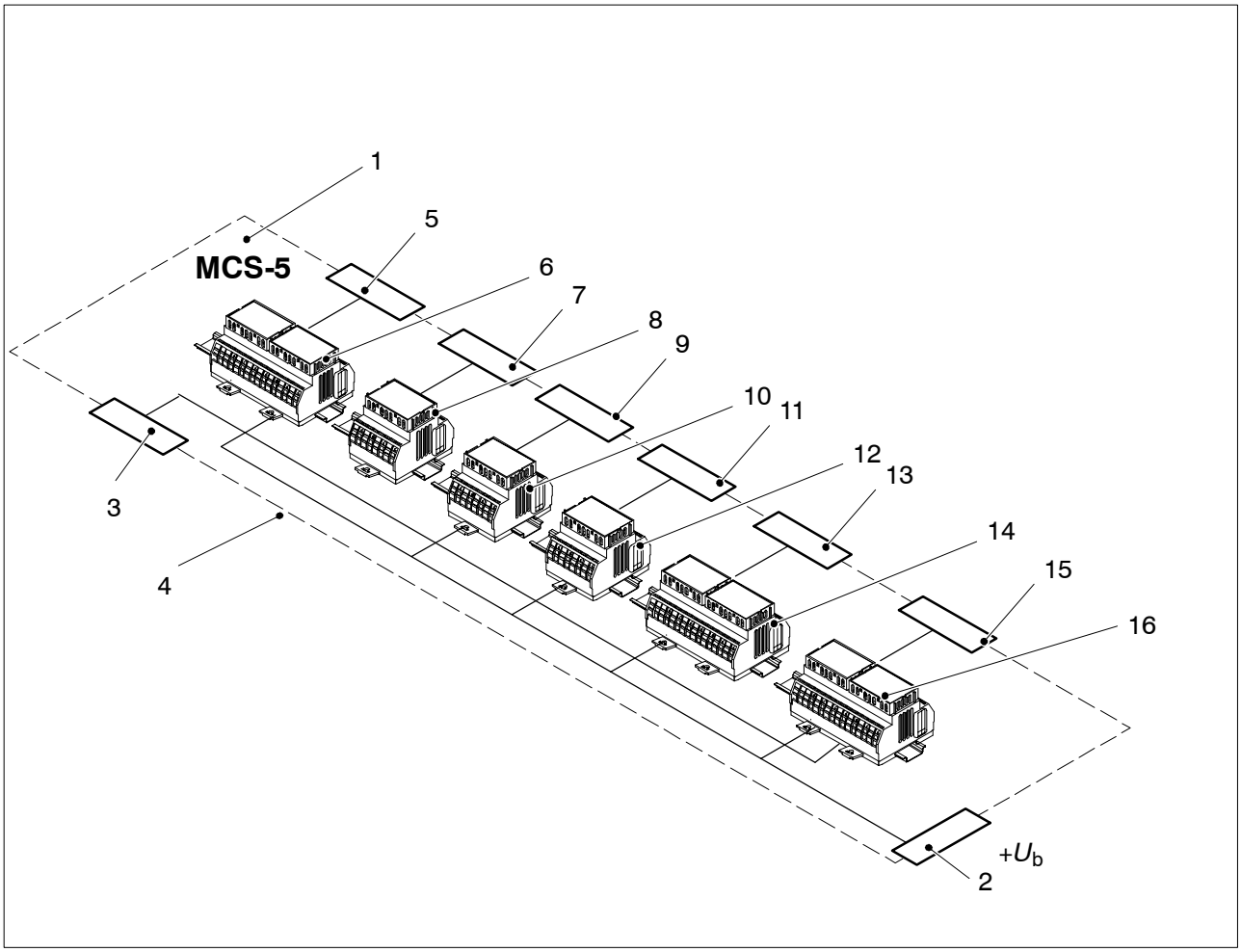

Fig. 6 : All optional Peripheral Interface Modules for the MCS-5 of the MDEC for stationary generator engines

Pos.	Name	Meaning
6/1	MCS-5	
6/2	$+U_b$	Power supply
6/3		Signal connection to ECS-5 devices
6/4	System demarcation line	MCS-5 sub-system
6/5	Interface	For superordinate genset control: Relay outputs for shutdown and combined alarms
6/6	PIM A 512	Peripheral Interface Module PIM 2 with relay outputs
6/7	Interface	For superordinate genset control: Transistor outputs for warnings and alarms as well as shutdowns
6/8	PIM A 513	Peripheral Interface Module PIM 1 with transistor outputs
6/9	Interface	For superordinate genset control: RS 422 / RS 232
6/10	PIM A 515	Peripheral Interface Module PIM 1 with serial CAN interface
6/11	Interface	For superordinate genset control: Transistor outputs for warnings and alarms (Limit 1 and Limit 2)
6/12	PIM A 516	Peripheral Interface Module PIM 1 with transistor outputs
6/13	Interface	For superordinate genset control: Relay outputs for warnings and alarms
6/14	PIM A 517	Peripheral Interface Module PIM 2 with relay outputs
6/15	Interface	For superordinate genset control: Inputs for temperature sensors (Pt100) and pressure sensors (0 ... 10 bar), binary outputs with switching signals for limit value violations
6/16	PIM A 519	Peripheral Interface Module PIM 2 with inputs and outputs for external sensors and for switching signals

Note: PIM 1: Small design with one cassette and space for two printed circuit boards.
PIM 2: Large design with two cassettes and space for four printed circuit boards.

Katolight Service - Master Repair Manual - Page 3223

1.3.2.3.2 Display DIS

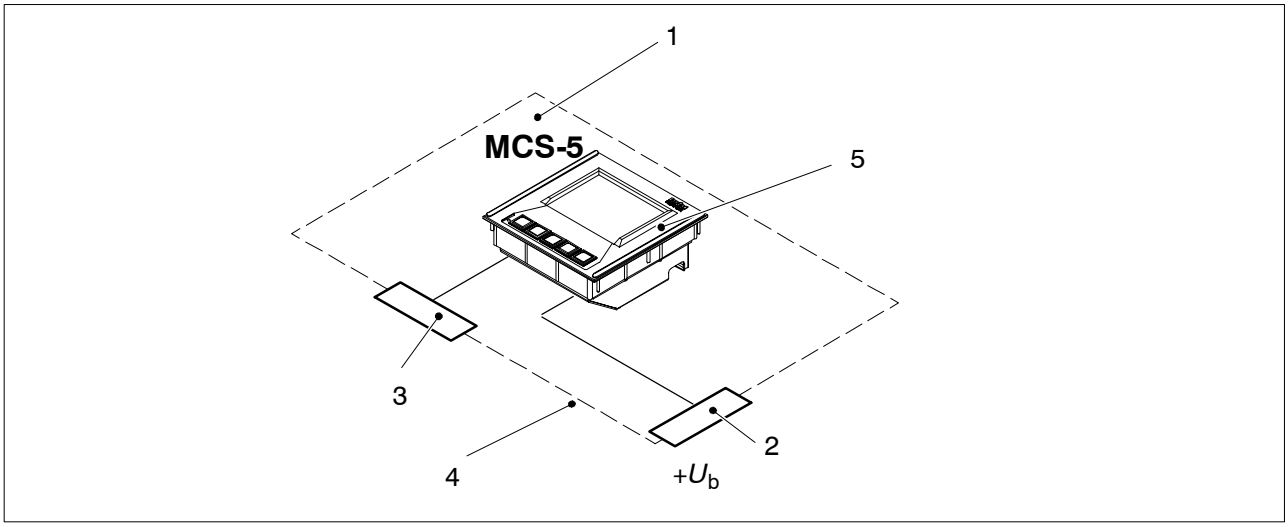

Fig. 7 : Display, option

Pos.	Name	Meaning
7/1	MCS-5	
7/2	+U_b	Power supply
7/3		Signal connection to ECS-5 devices
7/4	System demarcation line	MCS-5 sub-system
7/6	DIS	Display

1.3.2.3.3 Analog display instruments

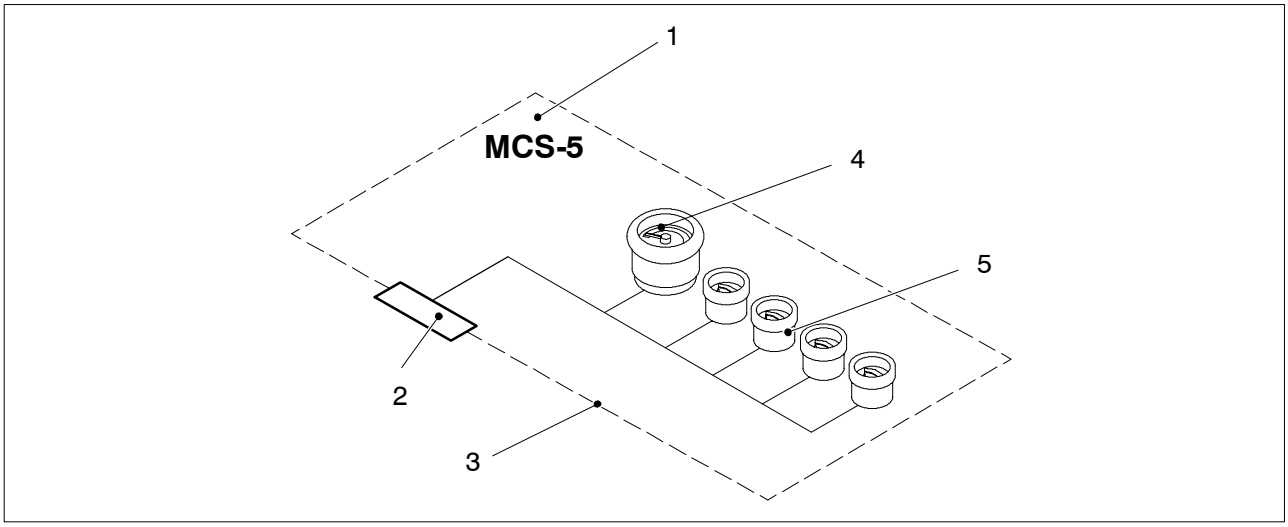

Fig. 8 : Analog display instruments, option

Pos.	Name	Meaning
8/1	MCS-5	
8/2		Signal connection to ECS-5 devices (ECU analog outputs)
8/3	System demarcation line	MCS-5 sub-system
8/4	Display instrument	Engine speed
8/5	Display instruments	Engine operating data

Note: The display instruments can be combined as desired.

1.3.2.4 The devices of Monitoring and Control System MCS-5

1.3.2.4.1 Peripheral Interface Module PIM A 511

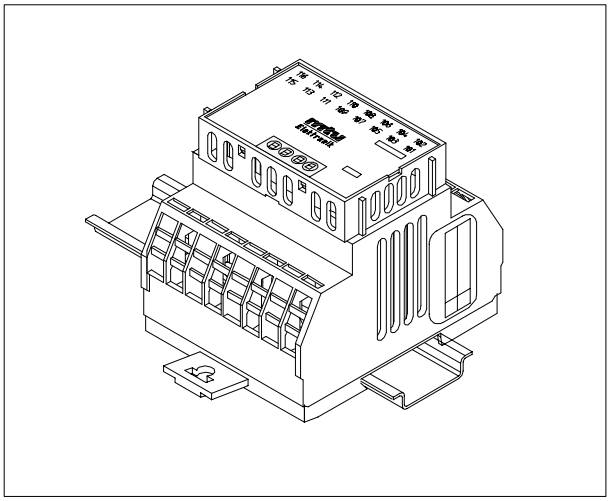

Fig. 9 : PIM A 511

Use

Peripheral Interface Module PIM A 511 is used to display ECU internal fault codes. Indication is realized by a four-figure 7-segment display. Alarms are recorded over a period of 12 hours. They are divided into four groups depending on the time they are received:

1. Current alarms
2. Alarms within the last hour
3. Alarms within the last 4 hours
4. Alarms within the last 12 hours

Furthermore, binary information can be output via two relay contacts.

Structure

A type 1 Peripheral Interface Module (2 slots) is used. The slots are assigned as follows:

Slot	Printed circuit board
1	MPU 23 with CCB 1 (option)
2	FCB

Technical data

Insallation position	As desired
Operating voltage	24 VDC, –25 % to +30 % Residual ripple less than 5 %, in accordance with STANAG 1008
Power consumption	Less than 0.10 A (depending on printed circuit boards used)
Connection cross-section	0.1 x 2.5 mm^2
Protection	IP 20 as per DIN 40 050
Shock	10 *g*, 11 ms
Vibrostability	
Hat rail mounting	2 Hz … 12.8 Hz: X_{pp} = 3 mm 12.8 … 100 Hz: $a = \pm 1\ g$
Screw mounting	2 Hz … 25 Hz: X_{pp} = 3.2 mm 25 Hz … 100 Hz: $a = \pm 4\ g$

Katolight Service - Master Repair Manual - Page 3226

Ambient temperature	–30 °C … +70 °C
Storage temperature	–35 °C … +70 °C
Relative humidity	0 % … 97 %, non-condensing
Colour	Blue (RAL 5015)
Material	Fibre-glass reinforced polycarbonate (PC)
PIM 1	
Dimensions (*H* x *W* x *D*)	75 mm x 70 mm x 90 mm
Number of terminals	32
Weight	Approx. 0.3 kg (configured)
PIM 2	
Dimensions (*H* x *W* x *D*)	75 mm x 140 mm x 90 mm
Number of terminals	64
Weight	Approx. 0.6 kg (configured)

Note: Refer to Printed circuit board catalog MCS-5, document no. E 531 439 for details of the pin assignment of the cassettes and the printed circuit boards inserted in them and information about channel assignment.

Katolight Service - Master Repair Manual - Page 3227

1.3.2.4.2 Peripheral Interface Module PIM A 512

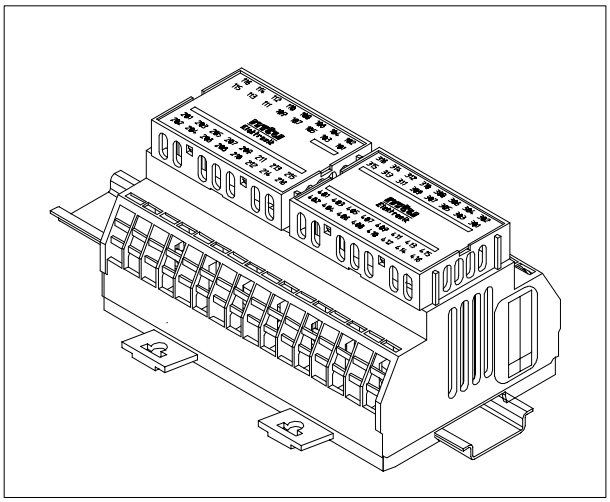

Fig. 10 : PIM A 512

Use

Peripheral Interface Module PIM A 512 is used to output the following information via relay contacts:

- Overspeeding
- Lube oil pressure shutdown
- Coolant temperature shutdown
- Coolant level shutdown
- Charge air shutdown
- Combined red alarm
- Combined yellow alarm
- Nominal speed reached

Structure

A type 2 Peripheral Interface Module (4 slots) is used. The slots are assigned as follows:

Slot	Printed circuit board
1	MPU 23 with CCB 1 (option)
2	free
3	BOB 1
4	BOB 1

Technical data

The technical data of PIM A 511 described in chap. 1.3.2.4.1 applies to all PIMs.

1.3.2.4.3 Peripheral Interface Module PIM A 513

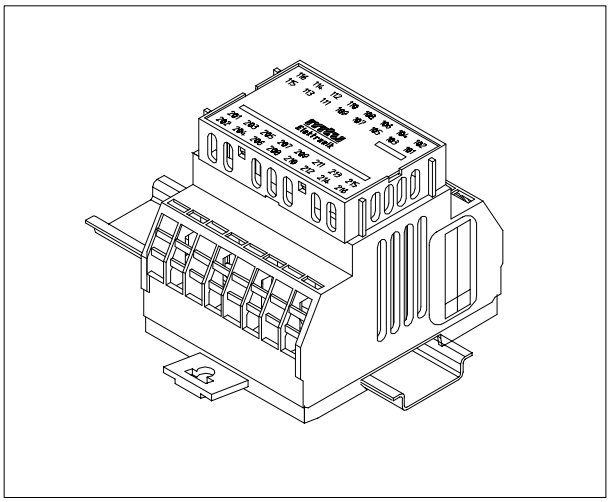

Fig. 11 : PIM A 513

Use

The 14 transistor outputs (+24 VDC positive switching) of Peripheral Interface Module PIM A 513 are used to output the following information:

1. Warning, coolant temperature too high
2. Warning, charge air temperature too high
3. Shutdown, charge air temperature too high
4. Shutdown, coolant level too low
5. Shutdown, charge air coolant level too low
6. Warning, charge air coolant level too low
7. Warning, lube oil temperature too high
8. Warning, lube oil pressure too low
9. Not used
10. Preheating temperature not reached
11. ECU is faulty
12. Engine running
13. High fuel pressure combined alarm
14. Nominal speed reached

Structure

A type1 Peripheral Interface Module (2 slots) is used. The slots are assigned as follows:

Slot	Printed circuit board
1	MPU 23 with CCB 1 (option)
2	BOB 2

Technical data

The technical data of PIM A 511 described in chap. 1.3.2.4.1 applies to all PIMs.

Katolight Service - Master Repair Manual - Page 3229

1.3.2.4.4 Peripheral Interface Module PIM A 515

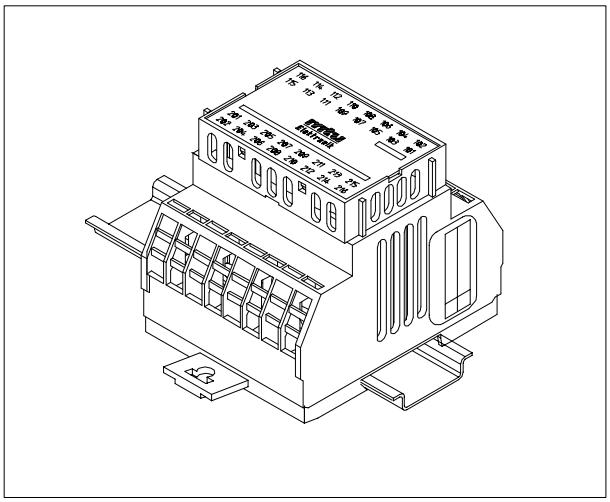

Fig. 12 : PIM A 515

Use

Peripheral Interface Module PIM A 515 is a serial interface coupler. The CAN bus signals are converted here to the signal level of an RS422 interface and an RS232 interface. Signals can only be output here.

Structure

A type 1 Peripheral Interface Module (2 slots) is used. The slots are assigned as follows:

Slot	Printed circuit board
1	MPU 23 with CCB 1 (option)
2	SCB 3

Technical data

The technical data of PIM A 511 described in chap. 1.3.2.4.1 applies to all PIMs.

The measured values transmitted and the interface protocol are explained in document no. E 531 966.

Katolight Service - Master Repair Manual - Page 3230

1.3.2.4.5 Peripheral Interface Module PIM A 516

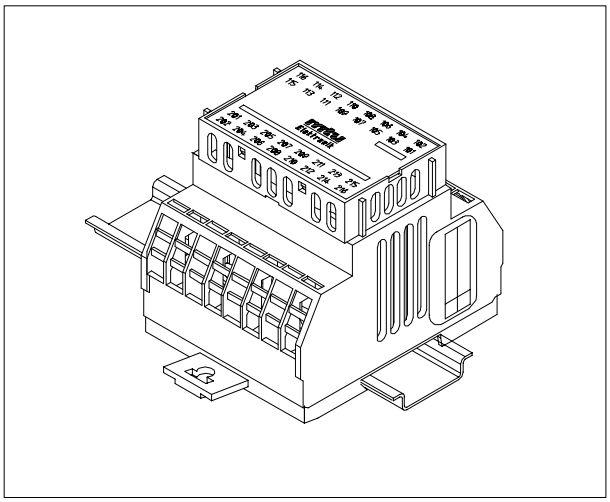

Fig. 13 : PIM A 516

Use

The 14 transistor outputs (+24 VDC negative switching) of Peripheral Interface Module PIM A 516 are used to output the following information:

1. Warning, coolant temperature too high
2. Warning, charge are temperature too high
3. Shutdown, charge air temperature too high
4. Shutdown, coolant level too low
5. Shutdown, charge air coolant level too low
6. Warning, charge air coolant level too low
7. Warning, lube oil temperature too high
8. Warning, lube oil pressure too low
9. Not used
10. Preheating temperature not reached
11. ECU is faulty
12. Engine running
13. High fuel pressure combined alarm
14. Nominal speed reached

Structure

A type 1 Peripheral Interface Module (2 slots) is used. The slots are assigned as follows:

Slot	Printed circuit board
1	MPU 23 with CCB 1 (option)
2	BOB 3

Technical data

The technical data of PIM A 511 described in chap. 1.3.2.4.1 applies to all PIMs.

Katolight Service - Master Repair Manual - Page 3231

1.3.2.4.6 Peripheral Interface Module PIM A 517

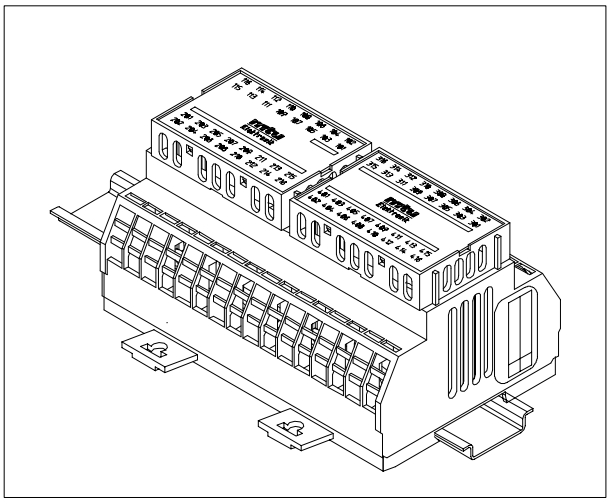

Fig. 14 : PIM A 517

Use

Peripheral Interface Module PIM A 517 is used to output the following information via relay contacts:
Slot 2:
1. ECU is faulty
2. High fuel pressure combined alarm
3. Warning, lube oil pressure too low
4. Warning, lube oil temperature too high

Slot 3:
5. Warning, coolant temperature too high
6. Warning, coolant temp. charge air too low
7. Warning, charge air temperature too high
8. Shutdown, charge air temperature too high

Slot 4:
9. Shutdown, coolant level charge air too low
10. Preheating temperature not reached
11. Nominal speed reached

Structure

A type 2 Peripheral Interface Module (4 slots) is used. The slots are assigned as follows:

Slot	Printed circuit board
1	MPU 23 with CCB 1 (option)
2	BOB 1
3	BOB 1
4	BOB 1

Technical data

The technical data of PIM A 511 described in chap. 1.3.2.4.1 applies to all PIMs.

Katolight Service - Master Repair Manual - Page 3232

1.3.2.4.7 Peripheral Interface Module PIM A 519

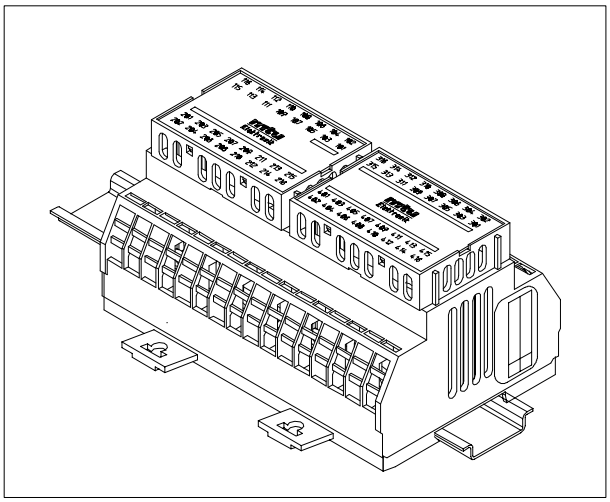

Fig. 15 : PIM A 517

Use

Peripheral Interface Module PIM A 518 is used to output and acquire the following information:
Slot 2:
1. Pressure instrument control
2. Temperature instrument control
3. Four binary inputs

Slot 3:
4. Two pressure inputs 0 ... 10 bar (4...20 mA)
5. Two Pt100 temperature inputs

Slot 4:
6. Limit value violation of measured values
4. and 5. (limit 1 and limit 2)

Note: This PIM is intended to acquire plant signals. Limit values related to these measured values are set as parameters in the ECU.

Structure

A type 2 Peripheral Interface Module (4 slots) is used. The slots are assigned as follows:

Slot	Printed circuit board
1	MPU 23 with CCB 1 (option)
2	IIB 1
3	AIB 1
4	BOB 1

Technical data

The technical data of PIM A 511 described in chap. 1.3.2.4.1 applies to all PIMs.

Katolight Service - Master Repair Manual - Page 3233

1.3.2.4.8 Display DIS

Use

The display is a decentralized information and monitoring device. It is used to indicate engine operating states, alarms and system information.

Displayed data (measured values, alarms etc.) are transmitted to the display from the Monitoring and Control System (MCS-5) via the field bus.

The display panel is designed for flush-mounting.

The monochrome LCD has a screen diagonal of 5.7” and is based on STN technology with a resolution of 320 x 240 pixels. Integral background illumination facilitates reading even in poor ambient light conditions. Brightness and contrast are adjustable and regulated by temperature. Navigation on the various levels and pages is realized by means of 5 function keys.

Structure

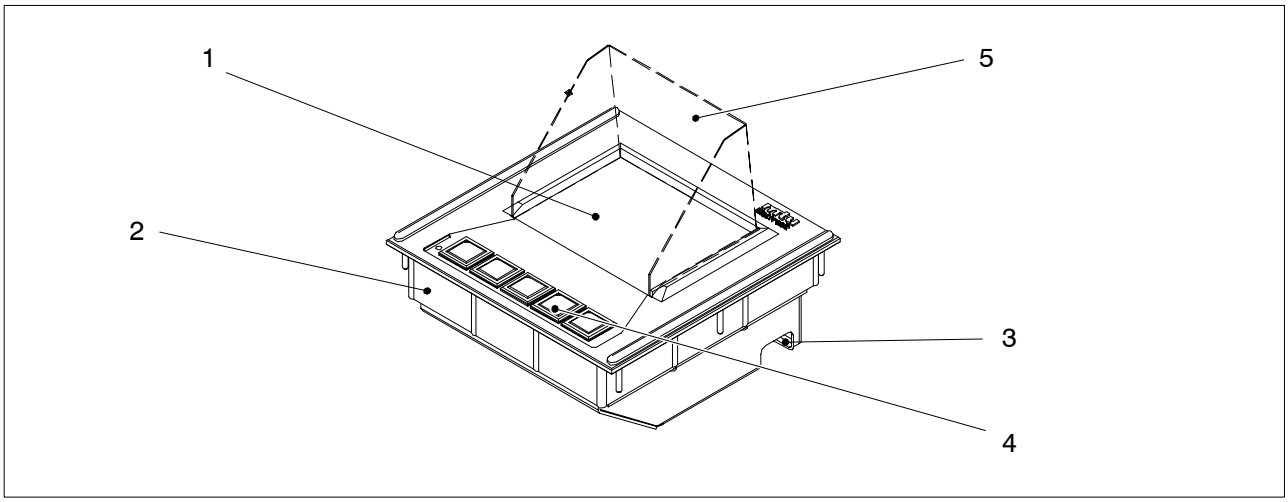

Fig. 16 : Monitoring and Control System display for enclosed control consoles

Pos.	Name	Meaning
16/1	Window	LCD display field
16/2	Housing cover	To protect the electronics
16/3	Aperture	To allow cable entry
16/4	F1 ... F5	Function keys for user interface operation
16/5	Shade	Shade attached with Velcro for use when exposed to direct sunlight, can be removed

Technical data

Type	DIS 7-01
Dimensions *(W* x *H* x *D)*	220 mm x 224 mm x 98 mm
Weight	1.9 kg
Operating voltage U_o	24 VDC
Tolerance	–50 %, –30 %
Residual ripple	In accordance with STANAG 1008, IEC 68, MIL-STD 704
Power consumption	15 W at 24 V
Storage temperature	–20 °C … +70 °C
Operational ambient temperature	0 °C … +55 °C
Relative humidity	0 % … 97 %, non-condensing
Degree of protection as per DIN 40 050	
Front	IP 65
Rear	IP 10
Shock	15 *g*, duration 11 ms (semi-sinusoidal shock)
Vibrostability	
Frequency 2 Hz ... 12.8 Hz	x_{pp} = ±1.5 mm
Frequency 12.8 Hz ... 100 Hz	a = ±1 g
EMC	IEC 801, degree of severity 3 VDE 0875, group 3

Katolight Service - Master Repair Manual - Page 3235

1.3.2.4.9 Display instruments

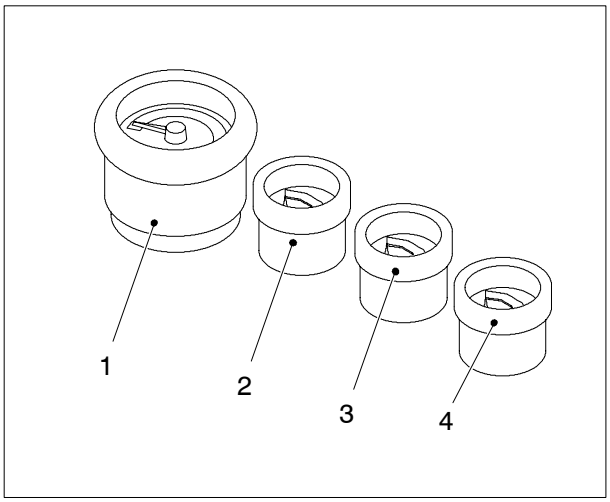

Fig. 17 : Display instruments

Use

Three different types of instrument are used to display the following engine operating data:

- Engine speed (17/1)
- Engine oil pressure (17/2)
- Engine coolant temperature (17/3)
- Coolant temperature (17/4)

Structure

VDO pointer-type instruments are used. These have white digits on a black background and feature background illumination (red backlighting). The speed instrument comes from the ∅ 85 mm series, the other three from the ∅ 52 mm series.

Technical data

Dimensions *(∅ x D)*	Speed instrument: 105 mm x 71 mm Pressure and temperature instruments: 62 mm x 60 mm
Illumination operating voltage	24 VDC, –25 %/+30 %
Measuring mechanism power consumption	4 mA … 20 mA (pressure and temperature)
Speed instrument	Input 0 … 10 V
Operating temperature range	–20 °C … +70 °C
Storage temperature range	–30 °C … +85 °C
Installation position	0° ... 90° as desired, preferably horizontal
Relative humidity	5 % … 98 % at 55 °C, condensation admissible
Degree of protection	Front IP 65 DIN 40 050
Colour	Black

Katolight Service - Master Repair Manual - Page 3236

1.3.3 Data connections

The devices of the overall MDEC system for stationary generator engines are equipped with a CAN bus to transmit data between the various sub-systems. This bus is redundant (i.e. two are provided).

The CAN bus is a standard automation technology field bus allowing various systems and devices to communicate providing they are equipped with a CAN bus interface.

The tasks of the CAN bus are:

- Receiving plant signals (set speed value) and commands from the superordinate generator system
- Output of all measured values/limit values for Monitoring and Control System MCS-5
- Alarm output for signalling and evaluation in Monitoring and Control System MCS-5
- Output of signals relevant to engine control

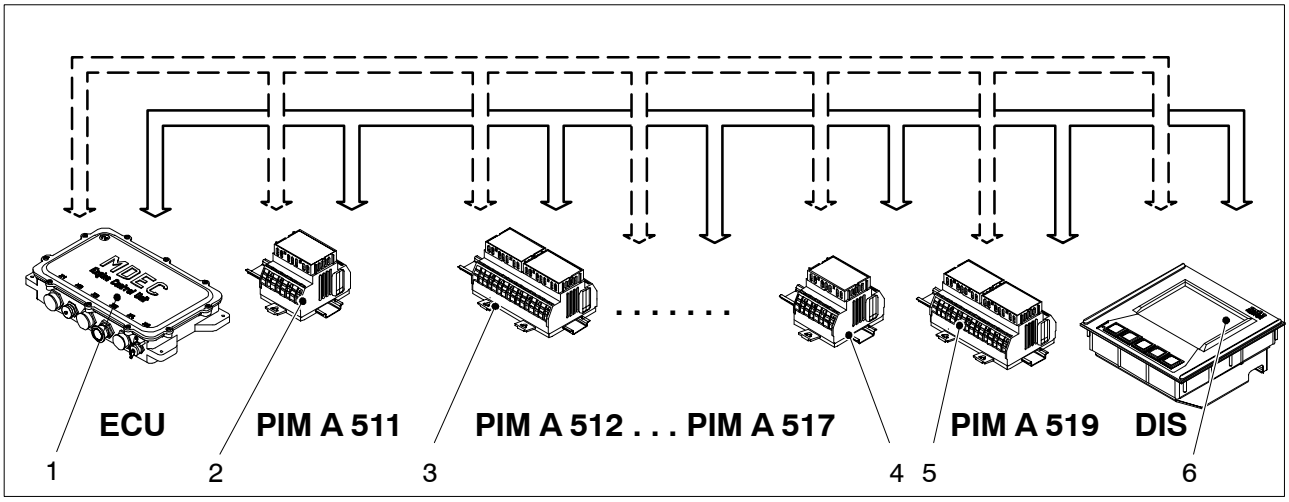

Fig. 18 : Data connections of devices in the overall MDEC system for stationary generator engines

Pos.	Name	Meaning
18/1	ECU	Engine Control Unit
18/2	PIM A 511	Fault code display
18/3	PIM A 512 to PIM A 517	Signal output
18/4		
18/5	PIM A 519	Signal input and output
18/6	DIS	Display

Katolight Service - Master Repair Manual - Page 3237

1.3.4 Power supply

The $+U_b$ power supply for all the devices in the overall MDEC system for stationary generator engines is supplied directly to the appropriate device terminals and the ECU connector.

1.3.5 Earthing

Both the engine and the alternator are connected to earth (PE) via an equipotential bonding strip on the skid.

The ground of the power supply and all electronic devices (–) is *not* connected to earth (PE). The entire electronic system is electrically isolated from the earth. This also applies to the sensors. All sensor signal lines and/or supply lines are *not* connected to the housing of the individual sensors. This means that no electrical connection is established between the engine/alternator and the battery negative terminal.

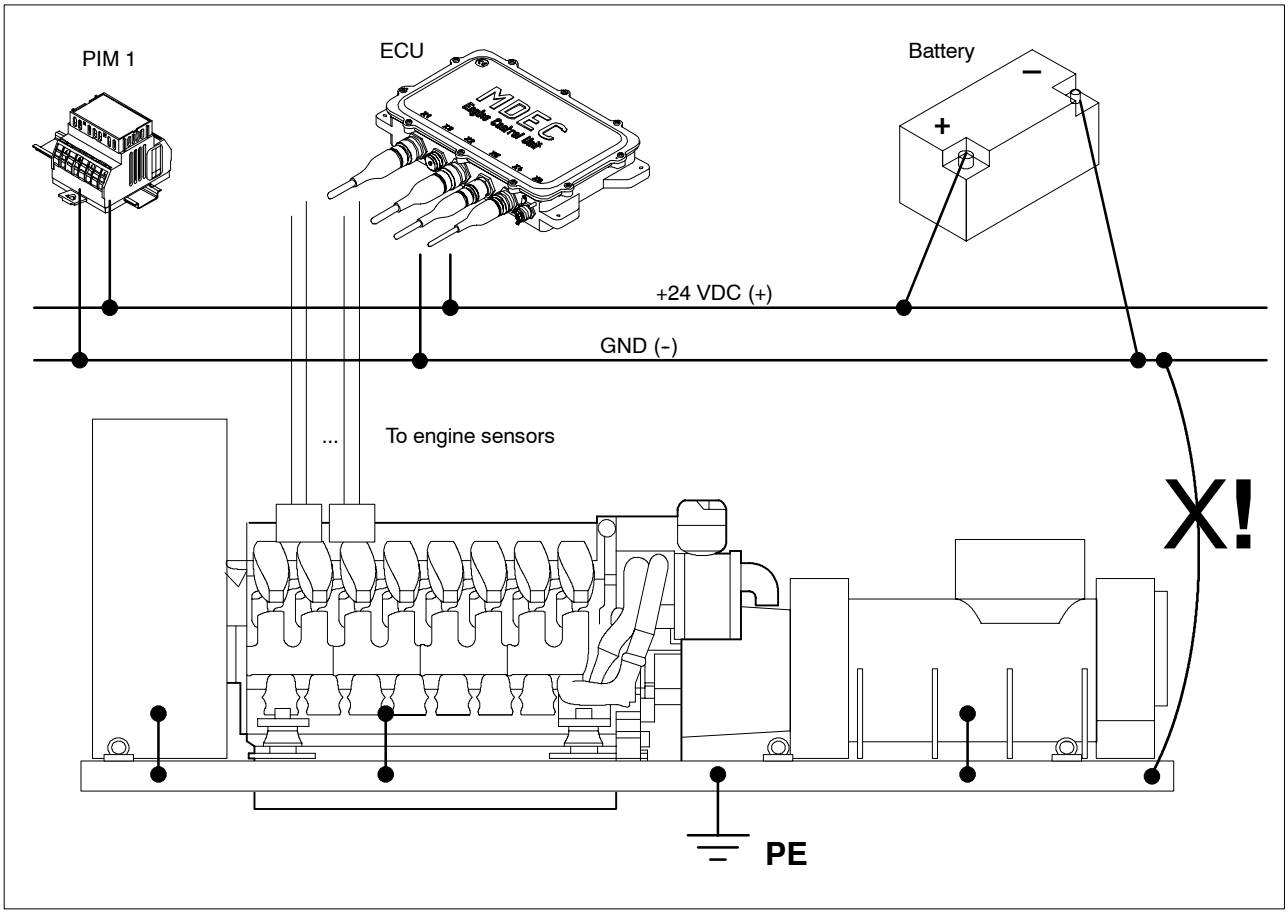

Fig. 19 : Earthing concept

Note: The connection marked by a cross in fig. 19 must not be established under any circumstances.

A considerably better signal-to-noise ratio is achieved by electrically isolating the mechanical and electronic components. This good signal-to-noise ratio on all electrical lines is necessary to ensure trouble-free transmission of all data on the CAN bus and also all the analog/binary sensor signals.

Katolight Service - Master Repair Manual - Page 3238

1.3.6 Technical data

Operating voltage	24 VDC, –25 %/+30 % Residual ripple less than 5 %
Power consumption	Depending on system design (number and type of options used), refer to the descriptions of the various devices, the total power consumption is the sum of the power consumed by the individual devices
EMI/EMC	IEC 801/EN 50081-2/EN 50082-2
Isolation resistance	IEC 92-504 (>10 MΩ/50 VDC) Assemblies incorporating electronic components shall be removed for the duration of the test.

Katolight Service - Master Repair Manual - Page 3239

1.4 Functions

1.4.1 Operating functions on display DIS (option)

Engine management system MDEC for stationary generator engines is operated via the display in Monitoring and Control System MCS-5.

Note: Display DIS only shows information about the operating state of the engine and the overall MDEC engine management system. The luminous pushbuttons on the display are only used to operate the man-machine interface.

Whether other operating functions (engine start and stop etc.) can be directly activated at the MDEC engine management system depends on the configuration of the system.

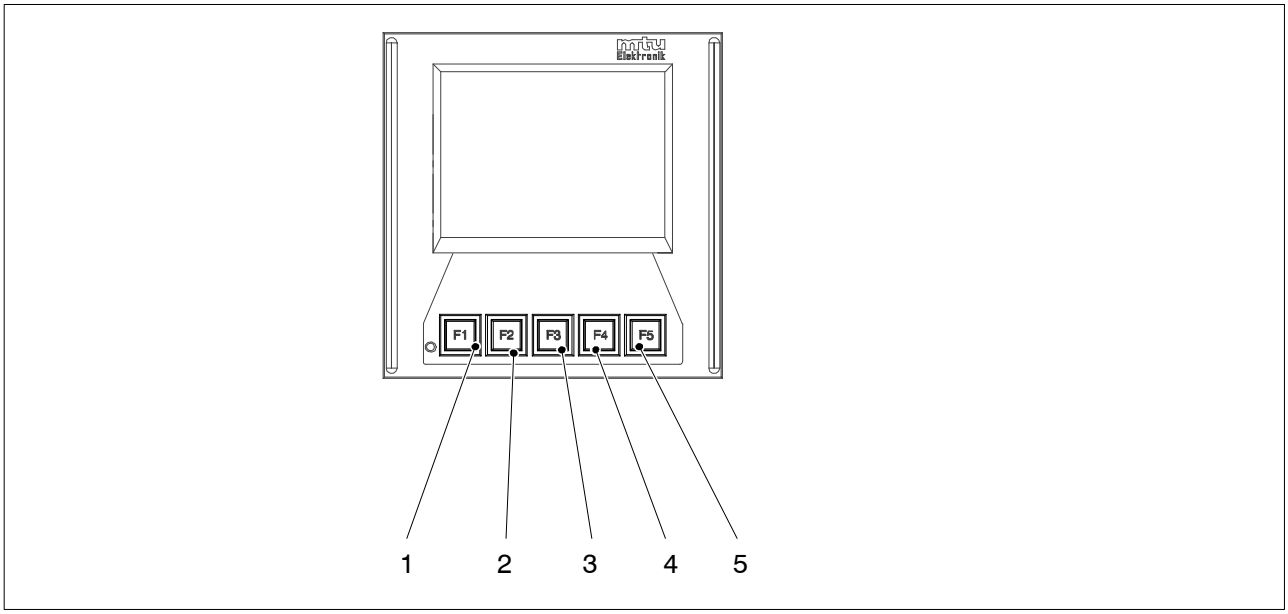

Fig. 20 : Controls for Monitoring and Control System MCS-5

Pos.	Function name	Meaning
20/1	Function key F1	Function keys F1 to F5 to operate the man-machine interface and for alarm acknowledgement and dimming; the functions activated by the various luminous pushbuttons vary and are indicated graphically on the display.
20/2	Function key F2	
20/3	Function key F3	
20/4	Function key F4	
20/5	Function key F5	

Katolight Service - Master Repair Manual - Page 3240

1.4.2 Display functions

1.4.2.1 Display functions of fault code display FCB in PIM A 511

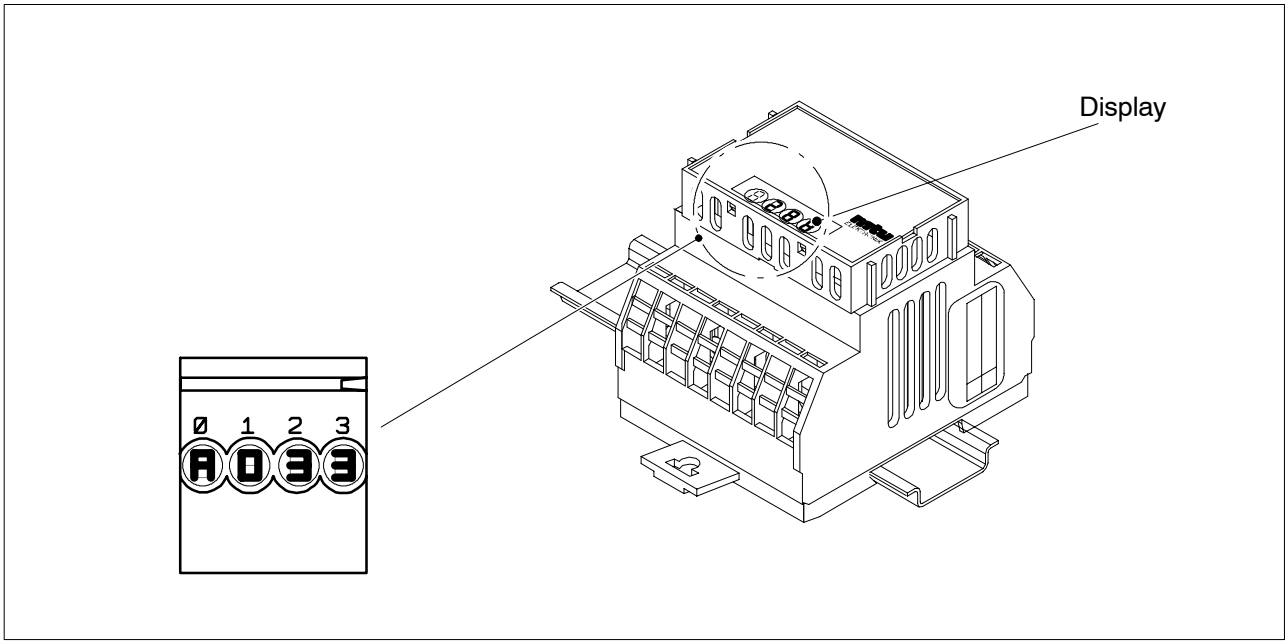

Fig. 21 : Display on printed circuit board FCB in Peripheral Interface Module PIM A 511

The fault codes generated by the ECU are shown on the display in PIM A 511 (see fig. 21).

The four digits indicating faults related to the ECU concerned have the following meaning:

- The first digit indicates that a fault has occurred
  (in the example in fig. 21: **A**).
  The meaning of the letters is as follows:
  - **A** The fault is new.
  - **B** The fault is no longer new, it occurred within the last operating hour.
  - **C** The fault occurred between one and four operating hours ago.
  - **D** The fault occurred between four and twelve operating hours ago.
- The second to fourth digits on the display indicate the three-figure fault code
  (see table in part 3 of this manual, example in fig. 21: **033**).

Note: Faults which occurred more than twelve hours ago are deleted automatically.

Katolight Service - Master Repair Manual - Page 3241

1.4.2.2 Display functions of display DIS (option)

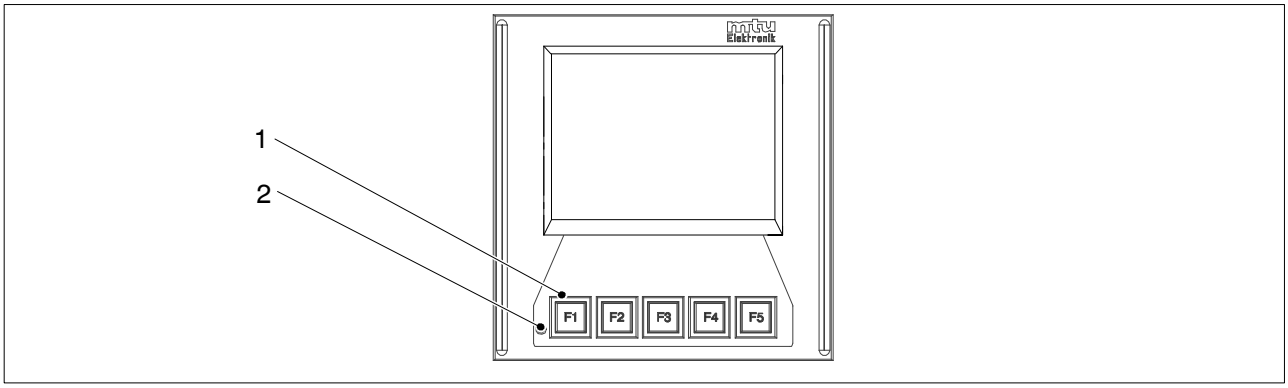

Fig. 22 : Display DIS

Detailed information about the drive is shown on the display (22/1) of Monitoring and Control System MCS-5. The display is menu-guided and can be controlled using the pushbuttons underneath the screen.

Menu structure is illustrated in chap. 1.4.2.3, fig. 23 on page 29.

A green LED (22/2) to the left of the function keys indicates the following operating states:

LED state	**Meaning**
Dark	No operating voltage.
Lit	Normal operation, project data loaded, no fault.
Flashes slowly (at approx. 2 Hz)	Field bus communication faulty or disrupted (CAN timeout), both CAN buses have failed. The display panel has no project data.
Flashes rapidly (at approx. 8 Hz)	Watchdog active. System in hardware reset state.

Katolight Service - Master Repair Manual - Page 3242

1.4.2.3 Display functions on the man-machine interface of the display (option)

The following menu structure is used on the DIS:

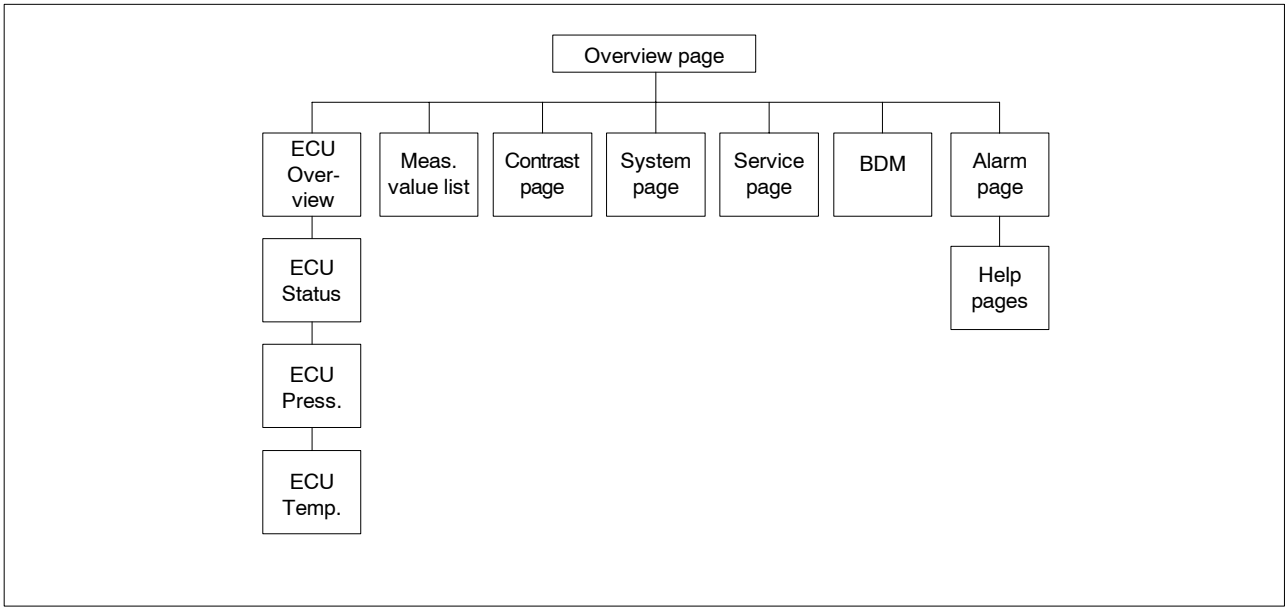

Fig. 23 : Menu structure

Screen page	Meaning	Type
Overview page	Overview of available screen pages	Overview page
ECU Overview	Graphic representation of measured values	Graphic page
ECU Status	Graphic representation of measured values	Graphic page
ECU Press.	Graphic representation of measured values	Graphic page
ECU Temp.	Graphic representation of measured values	Graphic page
Meas. value list	Displays measured values as text	Measured value list
Contrast page	For brightness and contrast adjustment	Contrast page
System page	System information	System page
Service page		Service page
BDM	Backup Data Module page, download	Text page
Alarm page	Display and state of alarms	Alarm page
Help pages	Online help	Help pages

Katolight Service - Master Repair Manual - Page 3243

1.4.2.3.1 General screen page structure

The screen pages are divided into the following areas:

- Status bar
- Central display area
- Key assignment display

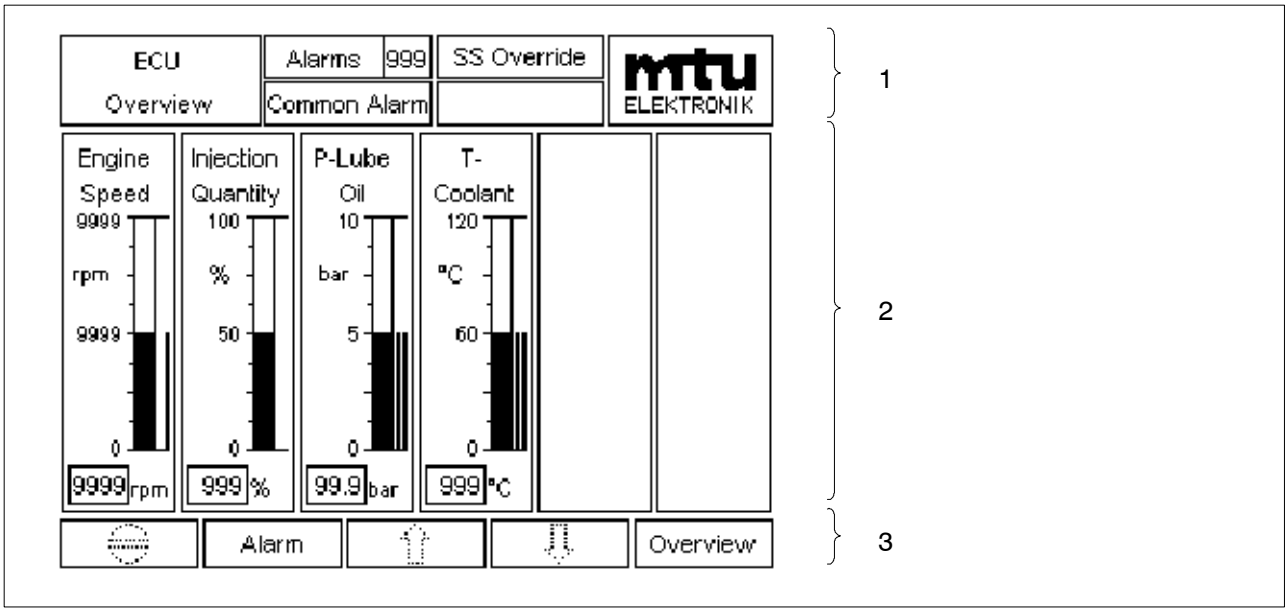

Fig. 24 : General screen page structure (example)

Pos.	Name	Meaning
24/1	Status bar	Display status information, e.g. number of alarms waiting to be processed
24/2	Central display area	Display of measured values, messages etc.
24/3	Function key assignment	Indicates function key assignment on the selected screen page

Status bar

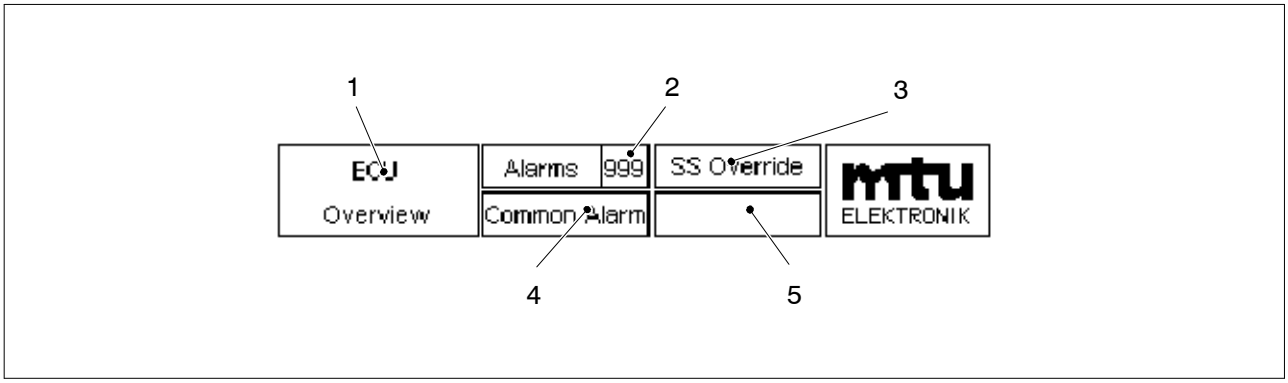

Fig. 25 : Status bar structure (example)

Pos.	Name	Meaning
25/1	Page designation	Name of the selected screen page
25/2	No. of alarms display field	Number of alarms waiting to be processed
25/3	Safety system override display field	A message is displayed when safety system override is active (safety features disabled), otherwise this field remains blank.
25/4	Common alarm display field	A message is displayed if a common alarm is received, otherwise this field remains blank.
25/5	System status display field	A message is displayed if a system status is received, otherwise the field remains blank. The following messages are displayed: • Initialization • Bus error • Bootup (connection) • Download (project data loading)

Katolight Service - Master Repair Manual - Page 3245

Central display area

The central display area is used to display the following pages:

- Overview page
- Graphic pages
  - Measured values in graphic representation
- Measured value list
  - Measured values in alphanumeric representation
- Alarm page
  - Alarm messages in alphanumeric representation
- Help pages
  - Alarm message structure
- Contrast page
  - LCD display adjustment
- Service page
  - Display and modification of system settings
- System page
  - System status and software version in alphanumeric representation
- Parameter page
- Status page

Function key assignment

Local Operating Station LOS is equipped with 5 function keys (F1 to F5) for navigation and alarm acknowledgement. The function keys are assigned various functions depending on the page selected on-screen.

Katolight Service - Master Repair Manual - Page 3246

1.4.2.3.2 Overview page structure

The pages which are available for selection in a menu are shown in the central display area at the Overview page.

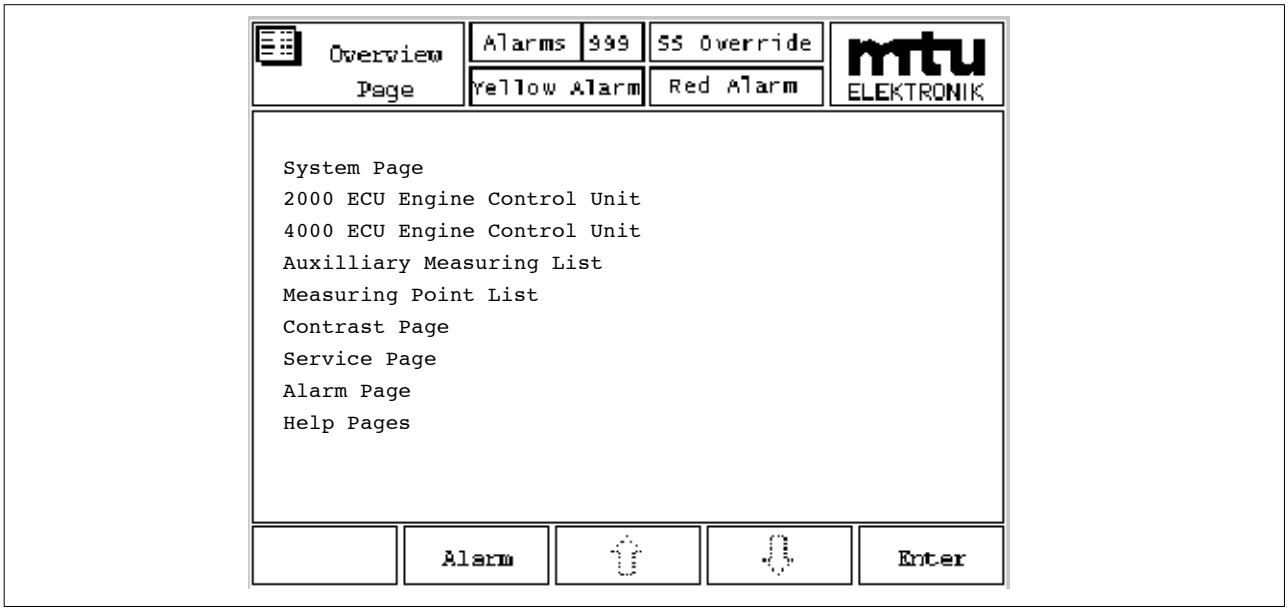

Fig. 26 : Overview page structure (example)

Katolight Service - Master Repair Manual - Page 3247

1.4.2.3.3 System page stucture

The central display area of the System page is used to display system status and software version.

The System page opens automatically when a system error occurs.

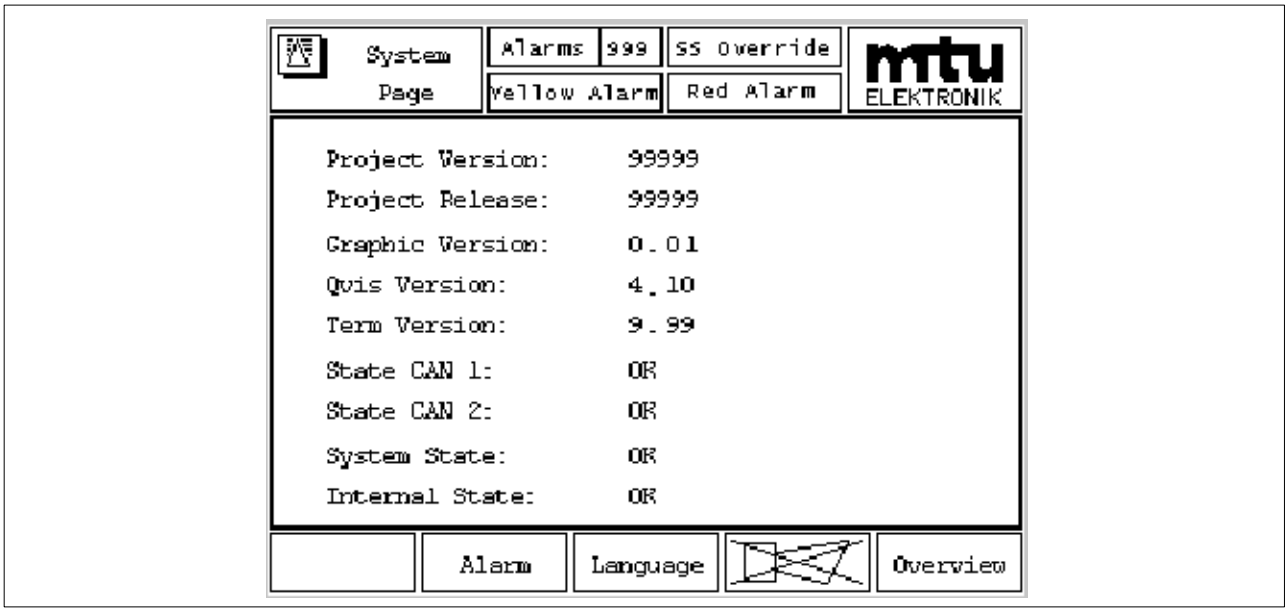

Fig. 27 : System page structure (example)

System variable	Display/input
Project Version:	Project version internal counter
Project Release:	Project release internal counter
Graphic Version:	Version number of the order-dependent application software developed with QVis
Qvis Version:	QVis version number used to develop the application software
Term Version:	Version number of the function software
State CAN 1:	Default CAN bus status
State CAN 2:	Redundant CAN bus status (option)
System State:	Entire system status
Internal State:	Display DIS status

1.4.2.3.4 Graphic page structure

The current operating values of a plant such as engine speed, injection quantity, lube oil pressure and coolant temperature are shown on the ECU overview in the Graphic page display field.

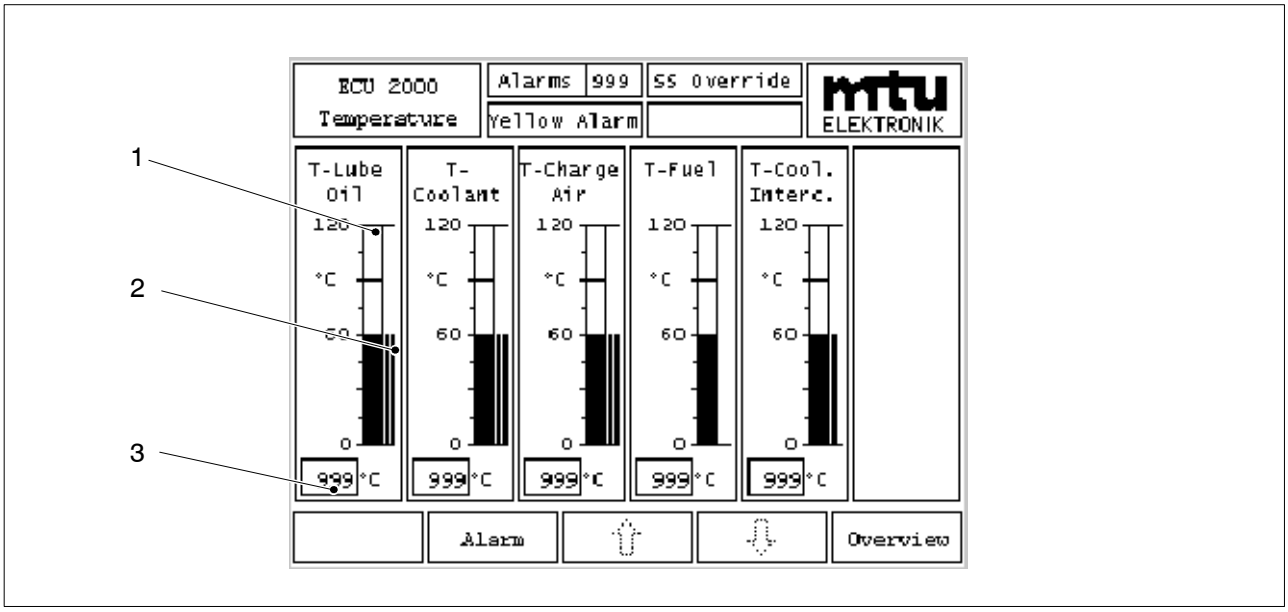

Fig. 28 : Graphic page structure

Pos.	Name	Meaning
28/1	Measured value bargraph	Bar size increases proportionally to the increase in the measured value
28/2	Limit value bargraph	Bar size increases proportionally to the increase in limit value
28/3	Numerical display field	Measured value is represented numerically

If a measured value is not within a valid range, one of the following messages is displayed in place of the numerical measured value:

- SD Sensor Defect
- MD Missing Data
- ## Measured value out of display range

Bargraphs are no longer displayed in such cases.

Katolight Service - Master Repair Manual - Page 3249

1.4.2.3.5 Measuring point list structure

Project-related measured values are represented alphanumerically in the display field of the measuring point list, these are not shown on the graphic pages.

Invalid measured values are identified as follows:

- SD Sensor Defect
- MD Missing Data
- ## Measured value out of display range

This state is indicated on the Alarm page.

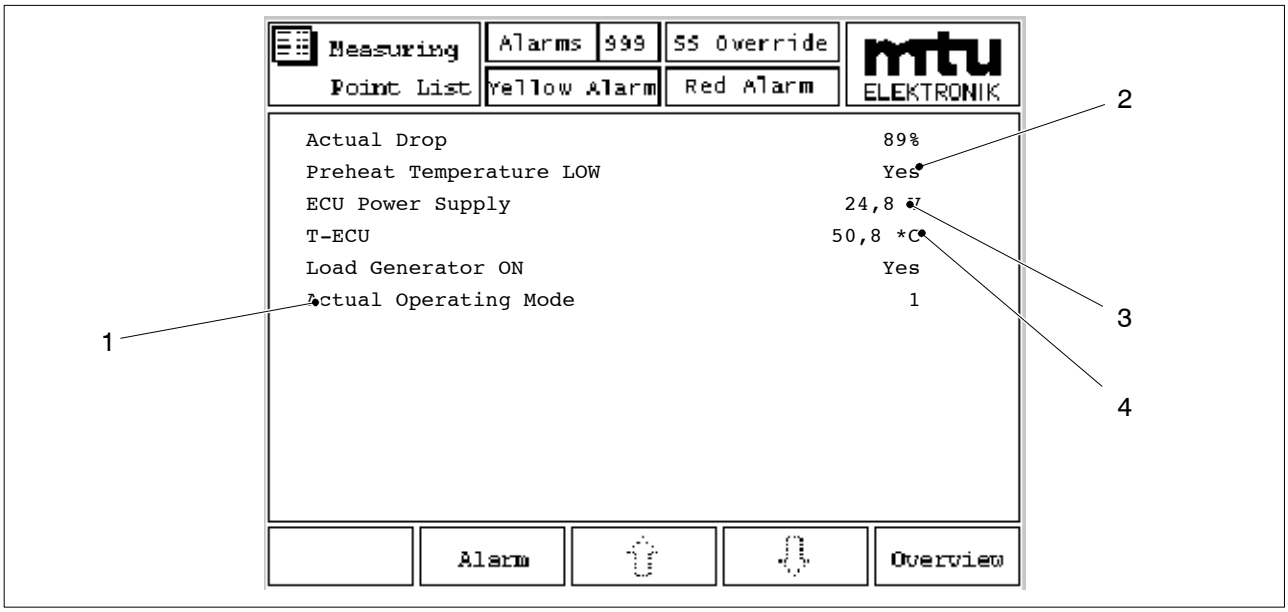

Fig. 29 : Measuring point list structure (example)

Pos.	Name	Meaning
29/1	Designation	Designation of the measured value
29/2	Binary value	Indicates the state of a binary value, e.g. “YES” or “NO”
29/3	Analog value	Indicates an analog measured value, e.g. 24.8 Volt
29/4	Unit	Unit of the displayed value, e.g. °C.

1.4.2.3.6 Contrast page structure

Bargraphs for brightness and contrast are shown in the central display area of the Contrast page together with the information that simultaneously pressing function keys F1 and F5 (within 3 seconds) resets the LC display to the default factory settings.

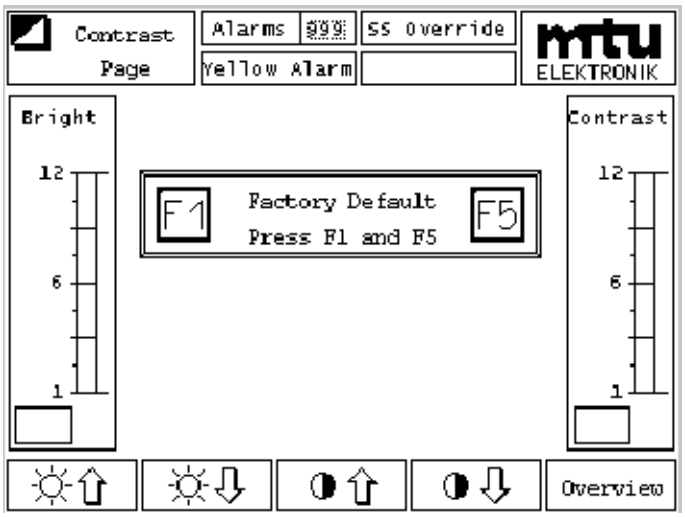

Fig. 30 : Contrast page structure (example)

The brightness of the keypad to the right of the display is also adjusted by pressing the two function keys F1 and F2. It is possible to offset display brightness and function key brightness on the Service page.

Katolight Service - Master Repair Manual - Page 3251

1.4.2.3.7 Service page structure

The central display area of the Service page is used to display (display mode) and modify system settings (edit mode).

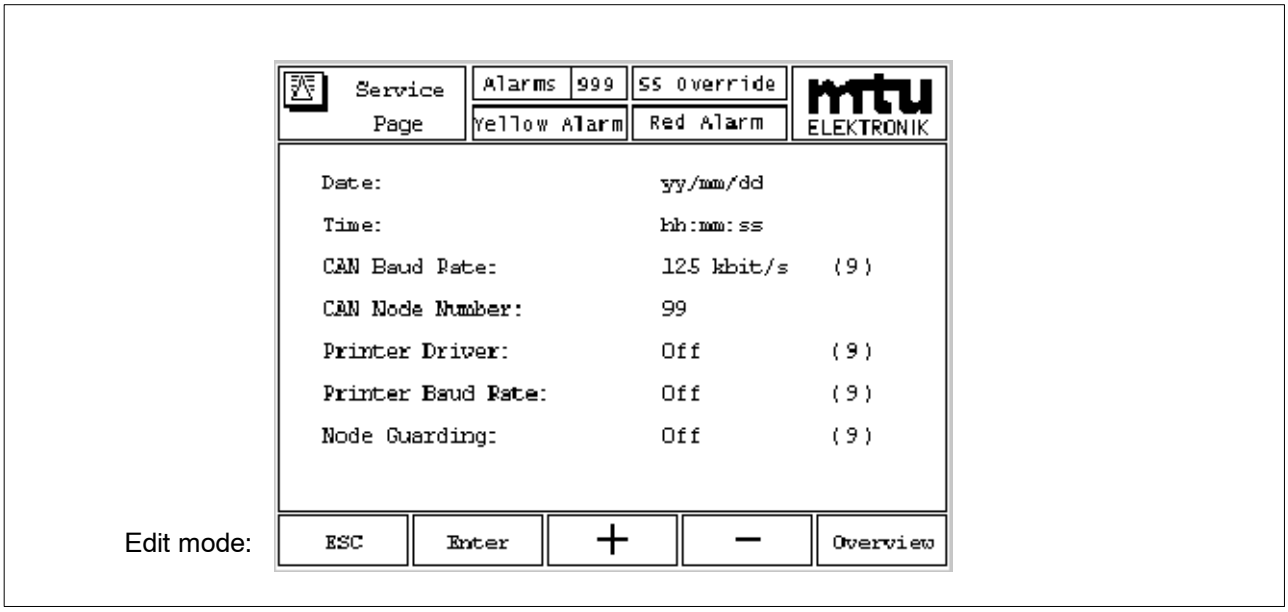

Fig. 31 : Service page structure (example)

System variables	Display/settings
Date:	Current date
Time:	Current time
CAN Baud Rate:	125 kbit/s (default) 250 kbit/s
CAN Node Number:	1 … 31
Printer Driver:	On / Off = Activate/deactive printer function
Printer Baud Rate:	Set transmission speed of the printer interface
Node Guarding:	Off = Node monitoring inactive Active = Node monitoring active

Katolight Service - Master Repair Manual - Page 3252

1.4.2.3.8 Alarm page structure

The alarms are displayed in the order of their occurrance in the central display area of the Alarm page.

Alarm names appear in the first column, alarm status in the second column (UNACK for unacknowledged, ACK for acknowledged) and the type of alarm in the third column (yellow, red).

New alarms are displayed at the bottom of the alarm list with status UNACK (unacknowledged). Entries flash in this state. When the alarm has been acknowledged, alarm status changes to ACK (acknowledged). The flashing entry is now displayed steadily. Alarms remain in the list as long as they apply.

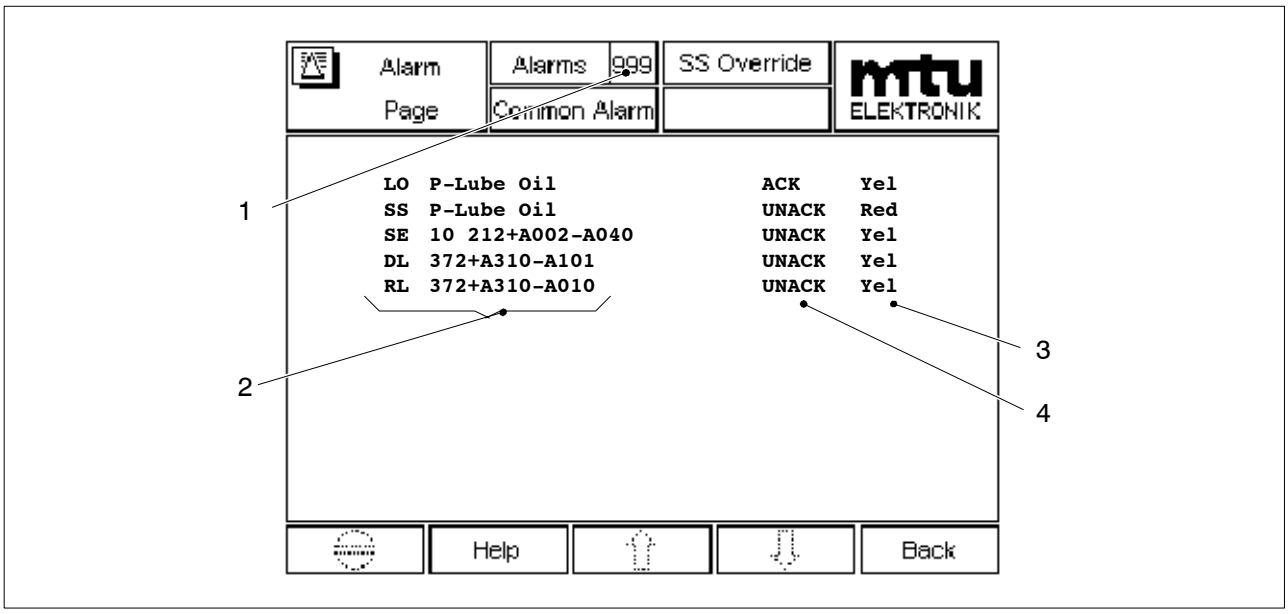

Fig. 32 : Alarm page structure (example)

Pos.	Name	Meaning
32/1	Number	Indicates the total number of alarms waiting to be processed.
32/2	Designation	Alarm designation
32/3	Alarm type	Type of alarm, e.g. “Yel” for Yellow (prewarning, 1st limit value violated).
32/4	Alarm status	Alarm status, e.g. “ACK” for Acknowledge

The following standard abbreviations are used to name alarms:

Katolight Service - Master Repair Manual - Page 3253

Column number on Alarm page	Entry	Meaning
1	AL …	“Alarm”, warning or alarm caused by a binary signal
	LO …	“Low”, warning or alarm due to low limit value violation
	HI …	“High”, warning or alarm due to high limit value violation
	TD …	“Transmitter Deviation”, warning or alarm due to excessive deviation between the analog values of two redundant sensors
	SD …	“Sensor Defective”, warning or alarm due to sensor failure
	SF …	“Switch Fault”, warning or alarm due to inadmissible combination of states of two complementary switches
	SS …	“Security Shutdown”, alarm which leads to emergency engine shutdown
	MG …	“Message”, message from an external system (e.g. engine management system)
	SE …	“System Error”, warning due to a system error
	DL …	“Default Lost”, warning due to node failure on the default field bus
	RL …	“Redundancy Lost”, warning due to node failure on the redundant field bus
	PB …	“Push Button”, status display due to activation of certain control pushbuttons

Column number on Alarm page	Entry	Meaning
2	UNACK	“Unacknowledged Alarm”, warning, alarm or message from an external system is active and unacknowledged
	UNACK_ALM (printout only)	“Unacknowledged Alarm”, warning, alarm or message from an external system is active and unacknowledged
	UNACK_RTN (printout only)	“Unacknowledged Return”, warning, alarm or message from an external system was cancelled without acknowledgement
	ACK	“Acknowledged Alarm”, warning, alarm or message from an external system is active and acknowledged
	ACK_ALM (printout only)	“Acknowledged Alarm”, warning, alarm or message from an external system is active and acknowledged
	ACK_RTN (printout only)	“Acknowledged Return”, warning or alarm disappeared after acknowledgement
3	Yel	“Yellow”, warning from MCS-5 or a message from an external system (e.g. engine management system)
	Red	“Red”, Alarm from MCS-5

Katolight Service - Master Repair Manual - Page 3255

1.4.2.3.9 Help page structure

Alarm message structure is explained in the central display area of the Help pages.

System error numbers and the associated system error designations are listed on Help page 1.

The abbreviations and associated descriptions of the various types of message are listed on Help page 2 to 4.

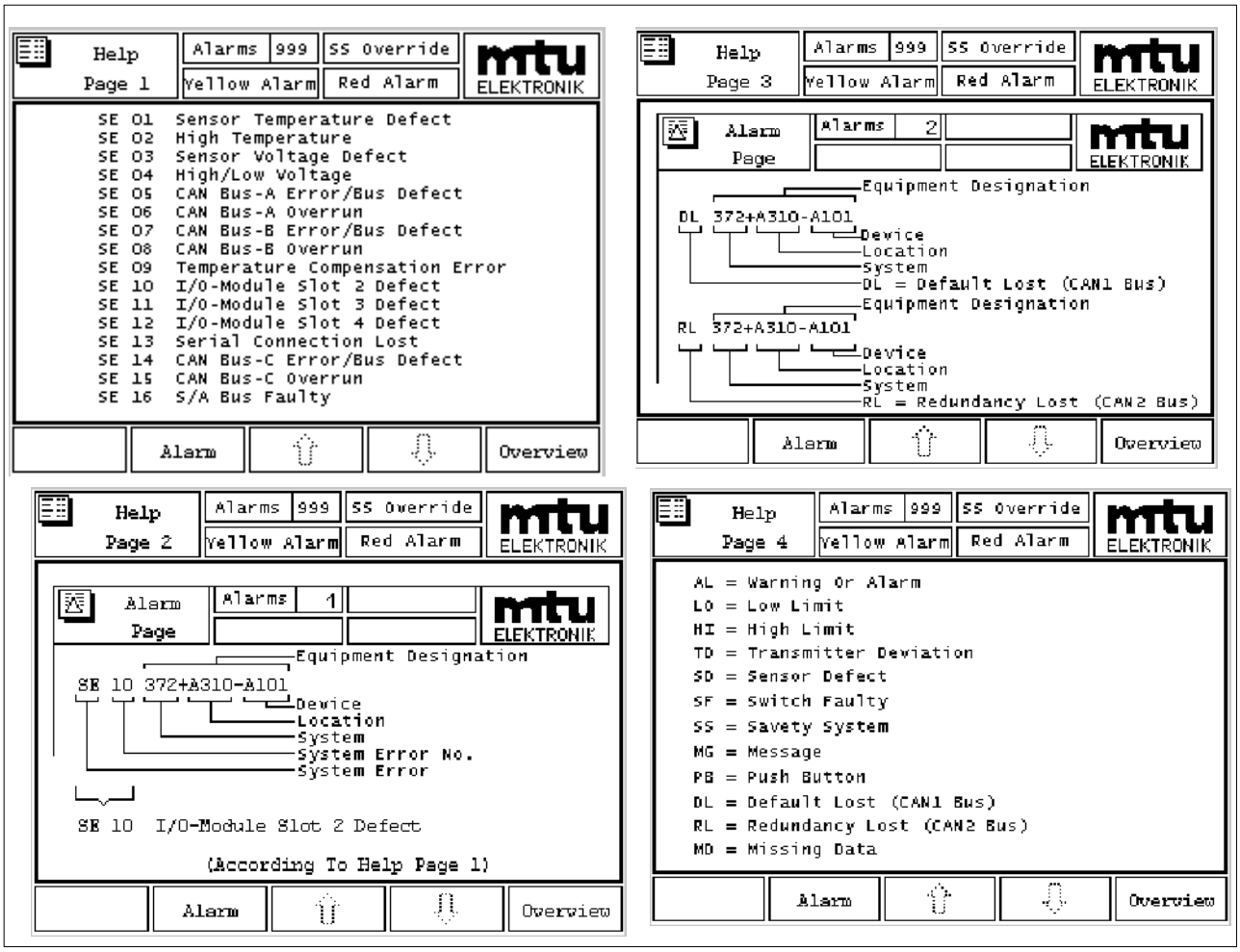

Fig. 33 : Help pages structure (example)

1.4.2.4 Display functions of the display instruments (option)

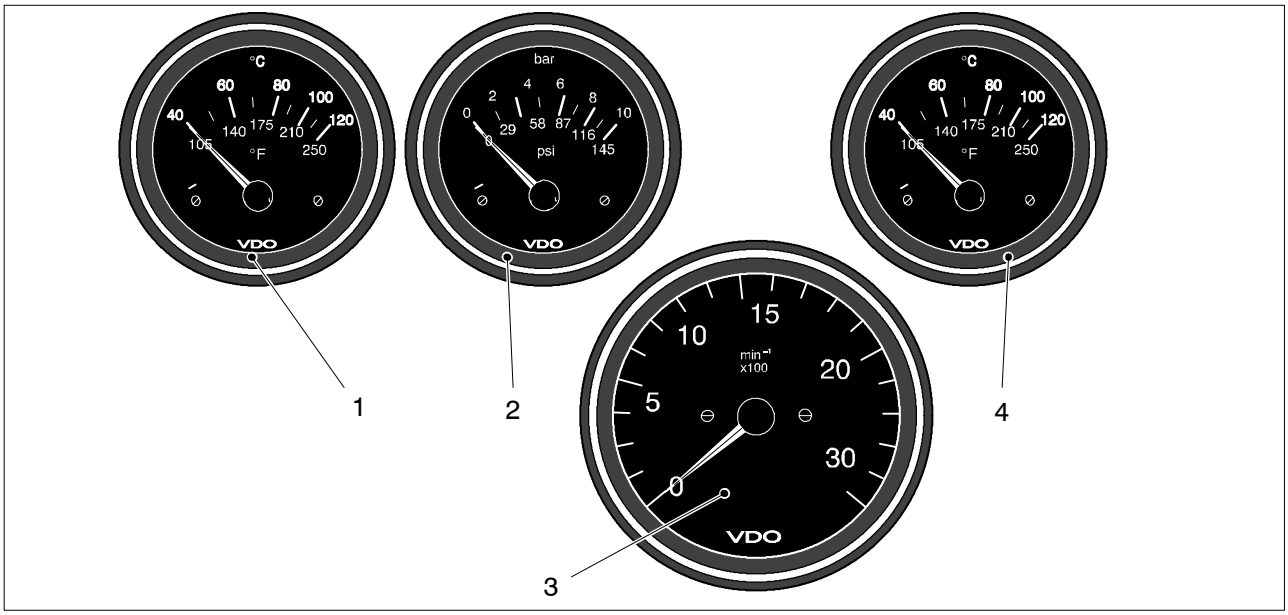

Fig. 34 : Monitoring and Control System MCS-5 display instruments (example)

Pos.	Function name	Meaning
34/1	Coolant temperature	Coolant temperature display
34/2	Lube oil pressure	Engine lube oil pressure display
34/3	Engine speed	Engine speed and operating hours display
34/4	Lube oil temperature	Lube oil temperature display

Katolight Service - Master Repair Manual - Page 3257

1.4.3 Acquisition functions

1.4.3.1 Plant signals

1.4.3.1.1 Signals to Engine Control Unit ECU

The following plant signals are acquired by the ECU of the MDEC engine management system for stationary generator engines:

Signal	ECU channel
Engine stop	BE 1
Switchover 50 Hz/60 Hz	BE 2
Alarm reset	BE 3
Speed droop switchover/set speed demand switchover	BE 4
Speed up	BE 5
Speed down	BE 6
Overspeed test	BE 7
Override	BE 8
Engine stop	BE 9
Set speed (analog) 0 V ... 10 V/4 mA ... 20 mA	IUE 1
Load pulse (analog) 0 mA ... 20 mA	IUE 2

1.4.3.1.2 Signals at PIM A 519

The following plant signals are acquired by Peripheral Interface Module PIM A 519 (option):

Signal	PIM channel
Input 1, plant switching signal, free assignment	BE1 slot 2
Input 2, plant switching signal, free assignment	BE2 slot 2
Input 3, plant switching signal, free assignment	BE3 slot 2
Input 4, plant switching signal, free assignment	BE4 slot 2
Output 1, pressure display instrument, free assignment	INST 1 slot 2
Output 2, pressure display instrument, free assignment	INST 2 slot 2
Output 1, temperature display instrument, free assignment	INST 3 slot 2

Katolight Service - Master Repair Manual - Page 3258

Signal	PIM channel
Output 2, temperature display instrument, free assignment	INST 4 slot 2
Input 1, plant pressure sensor, free assignment	4 ... 20 mA chan. 1 slot 3
Input 2, plant pressure sensor, free assignment	4 ... 20 mA chan. 2 slot 3
Input 1, plant temperature sensor, free assignment	Pt100 chan. 1 slot 3
Input 2, plant temperature sensor, free assignment	Pt100 chan. 2 slot 3
Alarm from input 1, plant switching signal	BIN OUT 1 slot 4
Alarm from input 2, plant switching signal	BIN OUT 2 slot 4
Alarm from input 3, plant switching signal	BIN OUT 3 slot 4
Alarm from input 4, plant switching signal	BIN OUT 4 slot 4
First limit value at input 1 plant pressure sensor violated	BIN OUT 5 slot 4
Second limit value at input 1 plant pressure sensor violated	BIN OUT 6 slot 4
First limit value at input 2 plant pressure sensor violated	BIN OUT 7 slot 4
Second limit value at input 2 plant pressure sensor violated	BIN OUT 8 slot 4
First limit value at input 1 plant temperature sensor violated	BIN OUT 9 slot 4
Second limit value at input 1 plant temperature sensor violated	BIN OUT 10 slot 4
First limit value at input 2 plant temperature sensor violated	BIN OUT 11 slot 4
Second limit value at input 2 plant temperature sensor violated	BIN OUT 12 slot 4

Katolight Service - Master Repair Manual - Page 3259

1.4.3.2 Engine signals

1.4.3.2.1 Sensors

The following engine signals are acquired by the ECU of the MDEC engine management system for stationary generator engines:

Sensor	Signal	BR 2000	BR 4000
B1	Camshaft speed	✓	✓
B5	Lube oil pressure	✓	✓
B6	Coolant temperature	✓	✓
B7	Lube oil temperature	✓	✓
B9	Charge air temperature	✓	✓
B10	Charge air pressure	✓	✓
B13	Crankshaft speed	✓	✓
B26	Intercooler coolant temperature		✓
B34	Fuel pressure, low-pressure side		✓
F57	Intercooler coolant level		✓
B33	Fuel temperature, high-pressure side	✓	✓
B48	Fuel pressure, high-pressure side		✓
F33	Engine coolant level	✓	✓

1.4.3.2.2 Sensors on the engine

	Engine coolant temperature	Charge air temperature	Coolant temperature LLK	Lube oil temperature	Low-pressure fuel	Lube oil pressure	Charge air pressure	Coolant level ILLK	Fuel temperature	High-pressure fuel	Engine coolant level	Crankshaft speed	Camshaft speed
BR2000	B6 to TE1	B9 to TE2	–	B7 to TE7	–	B5 to DE5	B10 to DE7	–	B33 to TE6	–	F33 to NSE 1	B13 to KW1	B1 to NW1
BR4000	B6 to TE1	B9 to TE2	B26 to TE6	B7 to TE7	B34 to DE3	B5 to DE5	B10 to DE7	F57 to NSE 2	B33 to TE3	B48 to DEH	F33 to NSE 1	B13 to KW1	B1 to NW1
Measured variable	Temperature	Temperature	Temperature	Temperature	Pressure	Pressure	Pressure	Level	Temperature	Pressure	Level	Speed	Speed
Sensors	Fig. 36	Fig. 36	Fig. 36	Fig. 36	Fig. 39	Fig. 37	Fig. 38	–	Fig. 36	Fig. 40	Fig. 41	Fig. 35	Fig. 35
Limit value 1 BR2000	97 °C	****	–	103 °C	–	5.5 bar*	–	–	–	–	–	**	**
Limit value 2 BR2000	102 °C	****	–	–	–	5.0 bar*	–	–	–	–	–	**	**
Limit value 1 BR4000	95 °C	67 °C	67 °C	95 °C	***	3.8 bar*	–	–	–	–	–	**	**
Limit value 2 BR4000	97 °C	70 °C	70 °C	–	***	3.3 bar*	–	–	–	–	–	**	**

Note: * Speed-dependent, see oil pressure monitoring curve 17.
** Limit values: BR2000 50 Hz: Limit value 2 at 1800 rpm
BR2000 60 Hz: Limit value 2 at 2100 rpm
BR4000 50 Hz: Limit value 2 at 1700 rpm
BR4000 60 Hz: Limit value 2 at 2000 rpm
*** Speed-dependent, see curve 15.
**** At 1500 rpm limit value 1 at 70°C;
**** Consumption optimized limit value 1 at 75°C, limit value 2 at 80°C

Katolight Service - Master Repair Manual - Page 3261

Speed sensors

Use	Type	Sensor range	Electr. signal	Number
Camshaft speed	Type 1	80 – 2800 rpm	0 – 80 V_{pp} AC	1
Crankshaft speed	Type 1	80 – 2800 rpm	0 – 80 V_{pp} AC	1

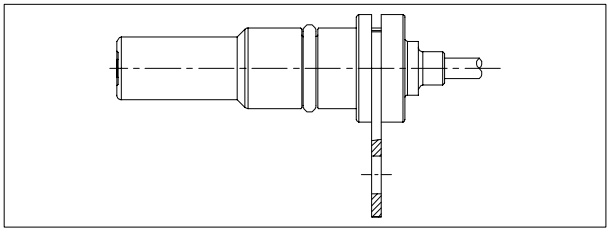

Fig. 35 : Structure of type 1

Temperature sensors

Use	Type	Sensor range	Electr. signal	Number
Coolant temperature	Type 1	–40 °C to +150 °C	Pt1000	1
Charge air temperature	Type 1	–40 °C to +150 °C	Pt1000	1
Lube oil temperature	Type 1	–40 °C to +150 °C	Pt1000	1
Fuel temperature	Type 1	–40 °C to +150 °C	Pt1000	1

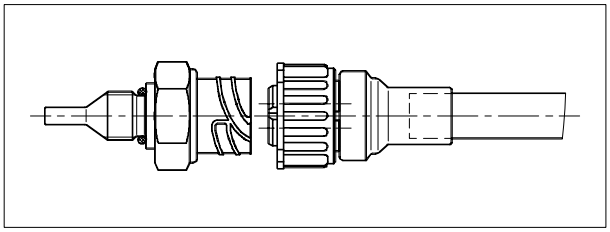

Fig. 36 : Type 1

Pressure sensors

Use	Type	Sensor range	Electr. signal	Number
Lube oil pressure	Type 1	0 – 10 bar relative	0.5 – 4.5 VDC	1
Charge air pressure	Type 2	0.5 – 4.5 bar absolute	0.5 – 4.5 VDC	1
Fuel pressure after filter	Type 4	0 – 15 bar relative	0.5 – 4.5 VDC	1
High pressure fuel	Type 6	0 – 1600 bar relative	0.5 – 4.5 VDC	1

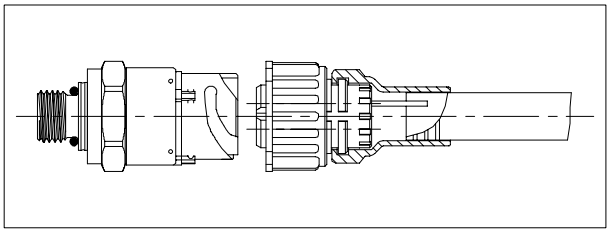

Fig. 37 : Type 1

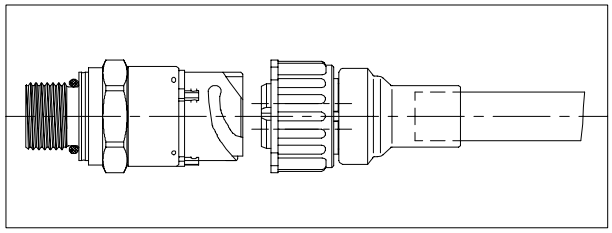

Fig. 38 : Type 2

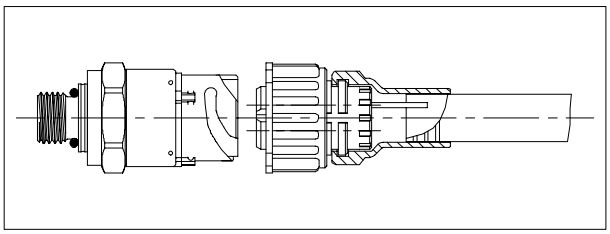

Fig. 39 : Type 4

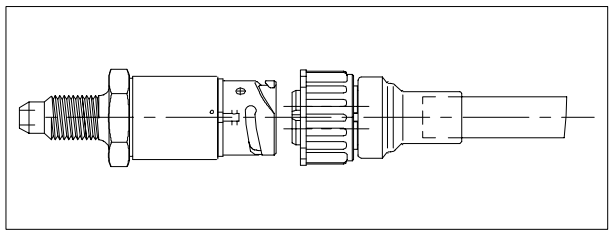

Fig. 40 : Type 6

Monitors

Use	Type	Sensor range	Electr. signal	Number
Coolant level	Type 3	–	Binary (/ GND)	1

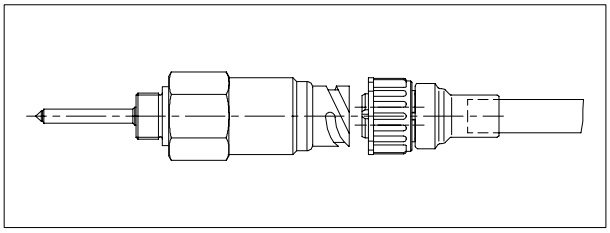

Fig. 41 : Type 3

1.4.4 Control functions

The MDEC engine management system for stationary generator engines is responsible for the following engine control functions:

- Start sequence control
- Stop control
- Emergency start control
- Controlling processes when the “Override” function is active
- Switching over the nominal speed between two preset values (e.g. to operate optionally as a 50 Hz or 60 Hz genset)
- Control of the injection quantity as a function of engine loading and speed

Katolight Service - Master Repair Manual - Page 3264

1.4.4.1 Engine start

1.4.4.1.1 Normal engine start

The start sequence is controlled by the software integrated in Engine Control Unit ECU.

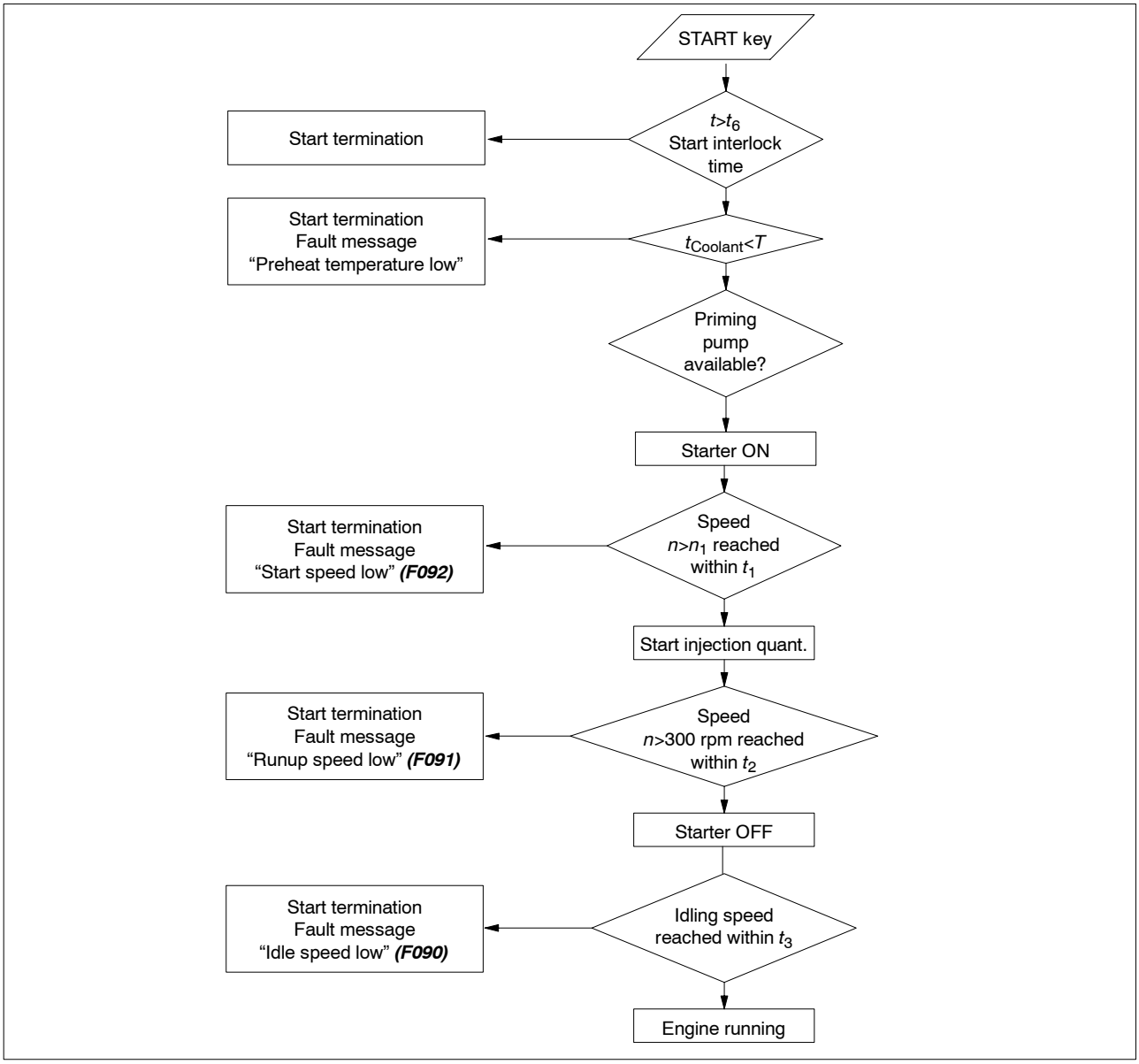

Fig. 42 : Start sequence flowchart

Engine Control Unit ECU commences injection as soon as the engine has crossed a defined speed threshold on the starter and no stop command is received from the plant.

Engine starting can be initiated by activating the appropriate input on Engine Control Unit ECU.

Katolight Service - Master Repair Manual - Page 3265

1.4.4.1.2 Engine restart

The term “Restart” is used for a repeated engine start request which is received when the engine is running down following a stop command. The response of the engine in this case depends on the speed at which it is running when the new start request is received:

- The engine immediately runs back up to nominal speed when n > 300 rpm.
- The engine is brought to a standstill when n < 300 rpm and the dwell time t_6 (see figs. 42 and 43) is then allowed to expire. An engine start as depicted in fig. 42 is then executed (after a new start request!).

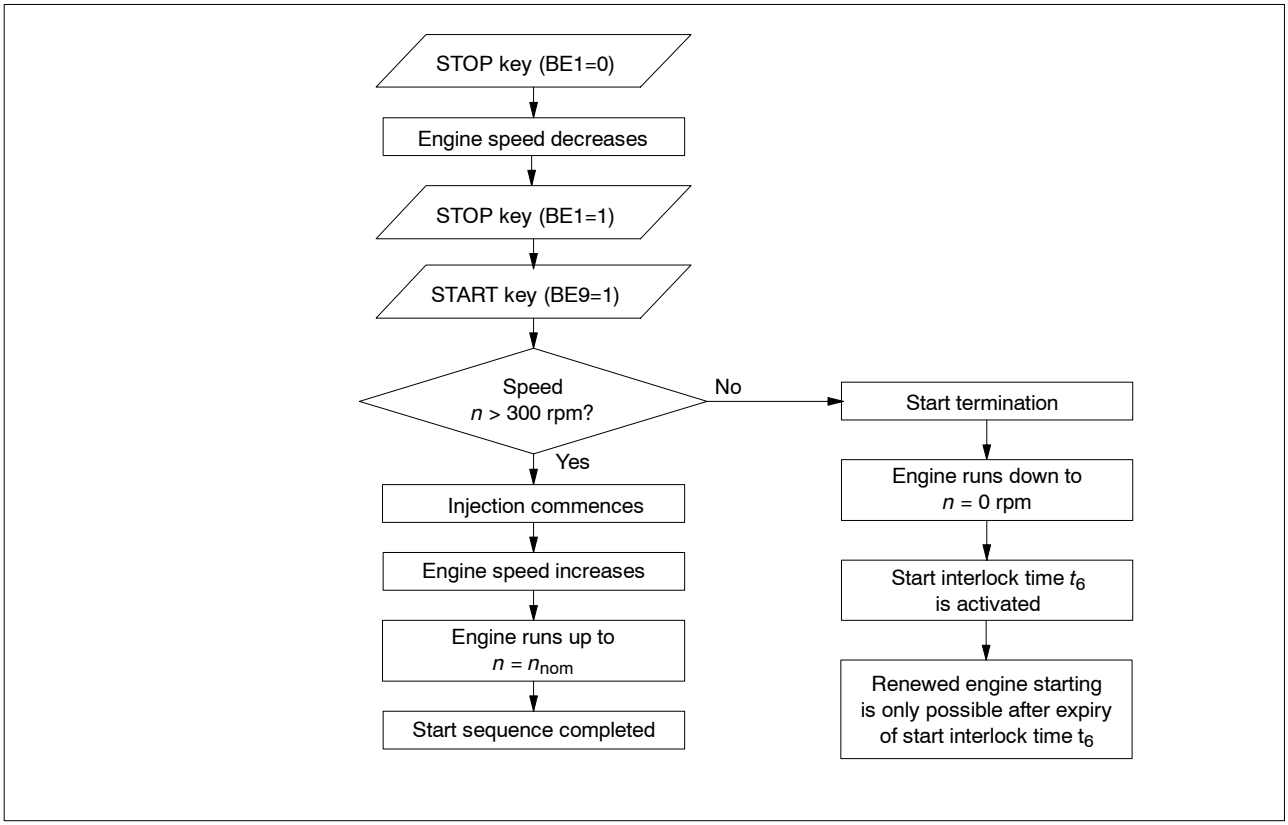

Fig. 43 : Restart flowchart

1.4.4.1.3 Emergency engine start

Start interlocking due to the criteria listed below is bypassed when the engine is started with override active (emergency start):

- Low coolant temperature (configurable)
- High coolant temperature
- Coolant level (configurable)

Katolight Service - Master Repair Manual - Page 3266

1.4.4.2 Engine stop

Engine stopping is initiated by activating the appropriate binary input on the Engine Control Unit ECU or by the engine safety system. The injection valves are no longer active and no more fuel is injected.

Any attempt to initiate starting is interrupted.

1.4.4.3 Override

The “Override” function is used to bypass safety features which are tripped in case of limit value violation or sensor defect (see chap. 1.4.7.1) and to bypass start interlocks (see chap. 1.4.4.1.3).

When the “Override” function is activated, operating states which would normally lead to engine shutdown are ignored (exception: Overspeeding always leads to engine shutdown).

1.4.4.4 50 Hz/60 Hz switching on bi-frequency engines

The mains frequency can be changed prior to engine starting in order to widen the genset’s field of application. The nominal speed is then set as follows:

- Mains frequency 50 Hz: Nominal speed 1500 rpm
- Mains frequency 60 Hz: Nominal speed 1800 rpm



CAUTION

Switching over is only possible when the engine is at a standstill!

The appropriate maps and parameters must have been programmed in the Engine Control Unit to allow switching and the engine must be suitably equipped (hardware).

1.4.4.5 Load pulse

A “Load pulse” signal can be acquired and evaluated in order to improve dynamic speed response to sudden, significant loading (input IUE 2 on ECU).

If the load changes very quickly, this signal adjusts the amount of fuel injected before the speed changes as a result of increased loading.

The “Load pulse” signal can be set either as a binary signal (in this case the amount of fuel injected is increased at a constant rate regardless of the degree of loading) or as an analog signal (the amount of fuel increases in proportion with the change in loading on the basis of a 0 mA ... 20 mA signal).

Katolight Service - Master Repair Manual - Page 3267

1.4.5 Monitoring functions

Engine management system MDEC for stationary generator engines fulfills the following monitoring tasks:

- Controlling analog displays (option) for
  - Engine speed
  - Engine lube oil pressure
  - Engine lube oil temperature
  - Engine coolant temperature
- Transmission of all measured values, warnings and alarms to the Monitoring and Control System via CAN bus
- Automatic shutdown in case of limit value violation

Refer to the measuring point list for details of order-specific project configuration data.

The engine monitoring system can be basically divided into two separate areas:

- An engine safety system which monitors the engine during operation (see chap. 1.4.5.1)
- A safety system which shuts down the engine in case of limit value violation (see chap. 1.4.7)

These two functional areas are monitored to ensure availability by the internal “Integral Test System (ITS)”.

1.4.5.1 Engine safety system

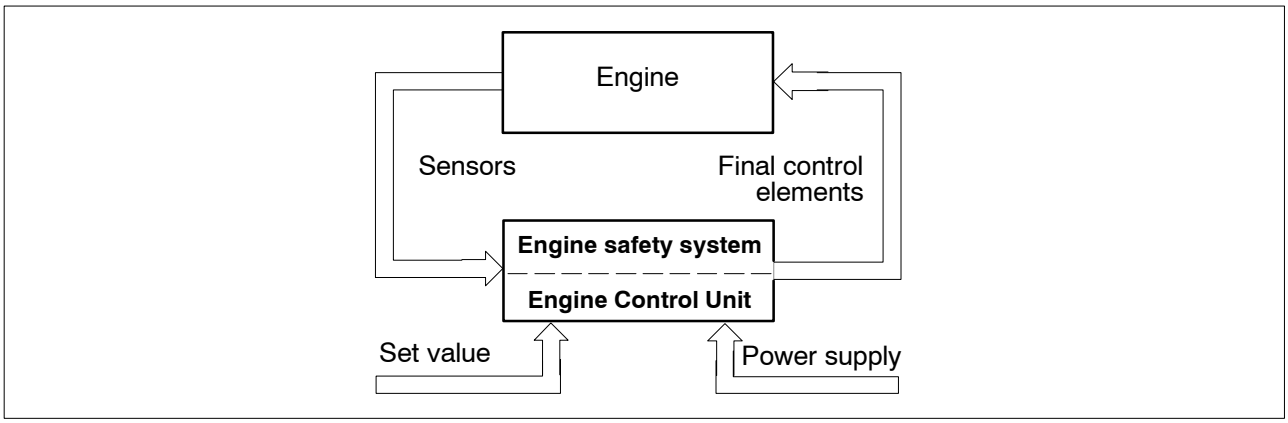

Fig. 44 : Engine Control Unit and engine safety system

The Engine Control Unit ECU incorporates an integral engine safety system. This monitors the engine operating values.

Tasks of the engine safety system are:

- Protecting the engine from assuming critical operating states
- Warning operating personnel
- Restricting engine operation to admissible operating values

Depending on the values measured, activities such as warning, start interlock, power reduction or engine shutdown by feeding reduction are carried out.

Katolight Service - Master Repair Manual - Page 3268

Possible activities of the engine safety system are:

- Outputting a fault message number via a Peripheral Interface Module PIM (option)
- Output of combined alarms (RED or YELLOW) and individual alarms
- Dynamic feeding limitation
- Engine stop by feeding reduction

1.4.5.2 Combined alarm signalling

Depending on the engine operating state, two different combined alarms can be generated and output (via the CAN bus and via one transistor output on Engine Control Unit ECU respectively):

- Combined alarm YELLOW (warning)

  This signal is activated when critical operating states are reached which require the operator to pay close attention.

- Combined alarm RED (shutdown)

  This signal is activated when operating states are reached which would destroy the engine if allowed to persist; the engine is automatically shut down to prevent this.

Alarms leading to engine shutdown are saved. The corresponding messages at the binary outputs remain unchanged until they are reset by activating the “Alarm Reset” binary input.

A fault message is also output if the engine safety system detects failure of a sensor signal. The type of fault message depends on the fault(s) which have occurred.

Katolight Service - Master Repair Manual - Page 3269

1.4.6 Regulating functions

Engine management system MDEC for stationary generator engines realizes the following engine regulating functions:

- Speed governor/feeding governor (depending on operating state)
- Injection regulation for solenoid valve-controlled injection with mapped injection start control
- Two adjustable speed droops (speed droop 1/speed droop 2 which can be switched via BE 4)
- Set speed value via
  - Analog or binary speed settings on the CAN bus
  - 0 V ... 10 VDC analog speed setting (configurable)/4 mA ... 20 mA/0 ... 5 V
  - Binary speed setting via up/down signal, frequency and CAN Bus
  - Frequency speed setting
- Acquisition of a load pulse signal (analog or binary) to prepare for load imposition
- High pressure fuel governor

1.4.6.1 Speed/injection regulation

The integral **engine speed governor** in Engine Control Unit ECU realizes the following functions:

- Maintaining the desired engine speed under changing load conditions
- Adjusting the engine speed when changed by the operator

Other tasks of Engine Control Unit ECU having an effect on speed governing are:

- Setting a defined injection fuel quantity for engine starting
- Engine safety shutdown
- Optimizing operation, exhaust emission values and fuel consumption
- Protecting the engine against overloading

The engine governor incorporates safety features to protect the engine, e.g. power limitation by restricting the amount of fuel injected depending on certain operating values and conditions.

Katolight Service - Master Repair Manual - Page 3270

1.4.6.2 Idle speed governor - maximum speed governor - feeding governor

Depending on the current operating state, the governor in the Engine Control Unit operates as:

- All-speed governor (only after engine starting)
- Idle speed governor
- Feeding governor
- Maximum speed governor

After engine starting, the speed runs up along a (programmed) speed ramp (all-speed governor) when the feeding quantity Q_{Input} set at IUE1 is less than the feeding quantity $Q_{Speed\ governor}$ calculated by the speed governor. Q_{Input} is active if the feeding quantity $Q_{Speed\ governor}$ is greater than Q_{Input}.

Note: If the engine is started in the absence of a signal at IUE1, the idle speed governor takes over after the engine has run up to speed.

If the feeding quantity Q_{Input} set at IUE1 exceeds the sum resulting from the feeding quantity $Q_{Speed\ governor}$ calculated by the idle speed governor and a hysteresis quantity $Hyst_{Idle\ governor}$, the ECU automatically switches over to operation as a feeding governor whereby feeding Q is equivalent to Q_{Input}.

If the actual speed n_{ACT} exceeds the effective maximum speed when running (maximum speed + speed droop), the governor in the ECU operates as a maximum speed governor.

If the feeding quantity Q_{Input} set at IUE1 decreases in maximum speed governor operation to a value below the difference resulting from the calculated feeding quantity $Q_{Speed\ governor}$ and a hysteresis quantity $Hyst_{Max.\ governor}$, the ECU automatically switches back to operation as a feeding governor whereby feeding Q is equivalent to Q_{Input}.

If the actual speed n_{ACT} now falls below the effective idling speed in operation (idling speed + speed droop), the governor in the ECU operates as an idle speed governor and regulates the idling speed.

Note: The transition between these various forms of governing takes place automatically when the generator is running and cannot be influenced. The setting criteria are adjusted via measuring point 178.

- Idling speed in 50 Hz operation
- Idling speed in 60 Hz operation
- Maximum speed in 50 Hz operation
- Maximum speed in 60 Hz operation
- Activation of idle speed – maximum speed governor

It is possible to display the currently active operating mode via measuring point 179.

Katolight Service - Master Repair Manual - Page 3271

1.4.6.3 Common Rail injection system (series 4000 only)

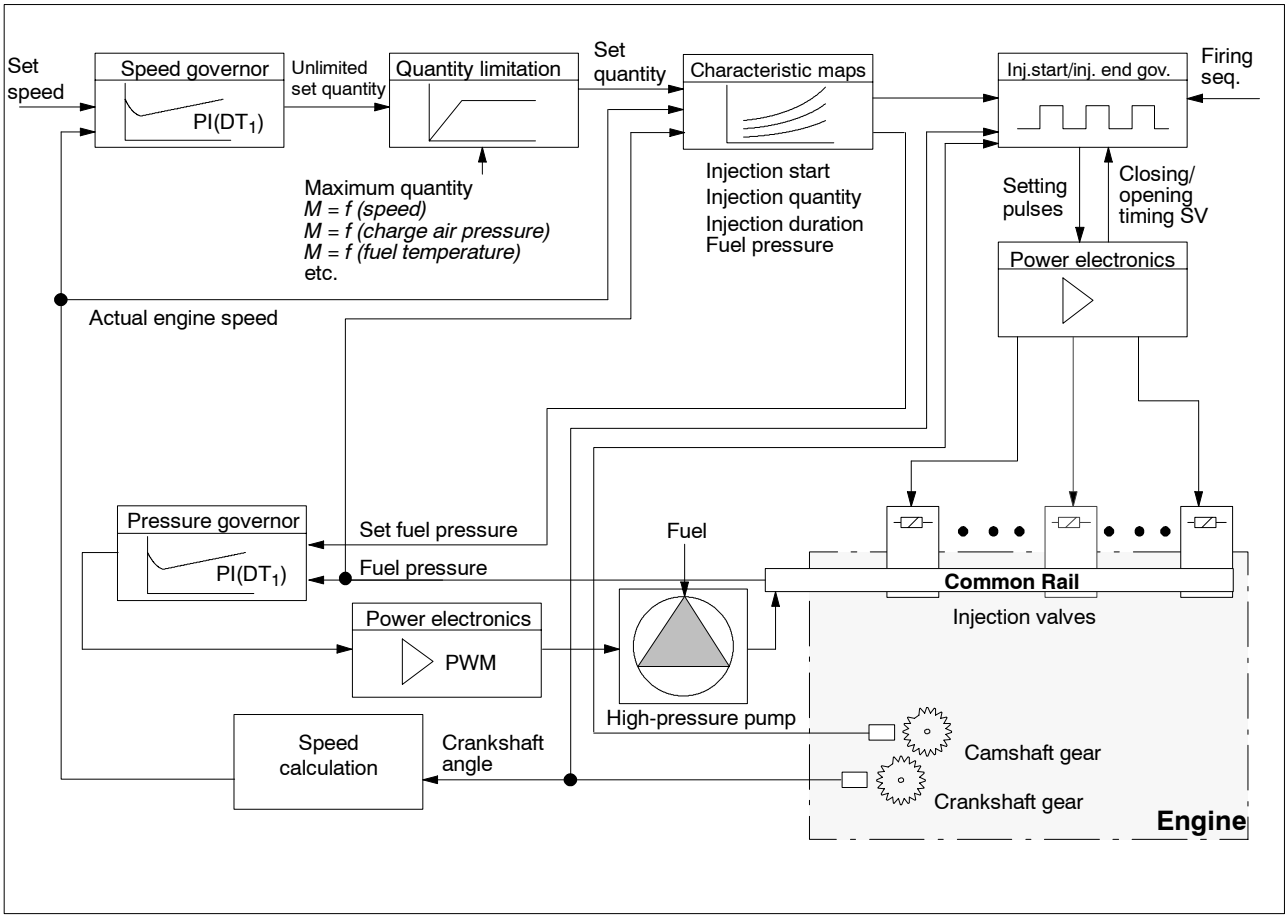

Fig. 45 : Control loop

The speed governor compares the speed setting with the current engine speed. It adapts its output signal (set injection quantity) to compensate the difference in case of deviation. The PID characteristics ensure a fast response to changes and precise speed setting.

Dynamic quantity limitation depending on the operating point protects the engine against overloading.

The set quantity after quantity limitation represents the input signal for the mapped injection start/injection end governor. The power electronics control the injection valves of the individual cylinders in accordance with these settings. The injection pressure of the Common Rail system is also regulated by the Engine Control Unit ECU.

Katolight Service - Master Repair Manual - Page 3272

1.4.6.4 PLN injection system (series 2000 only)

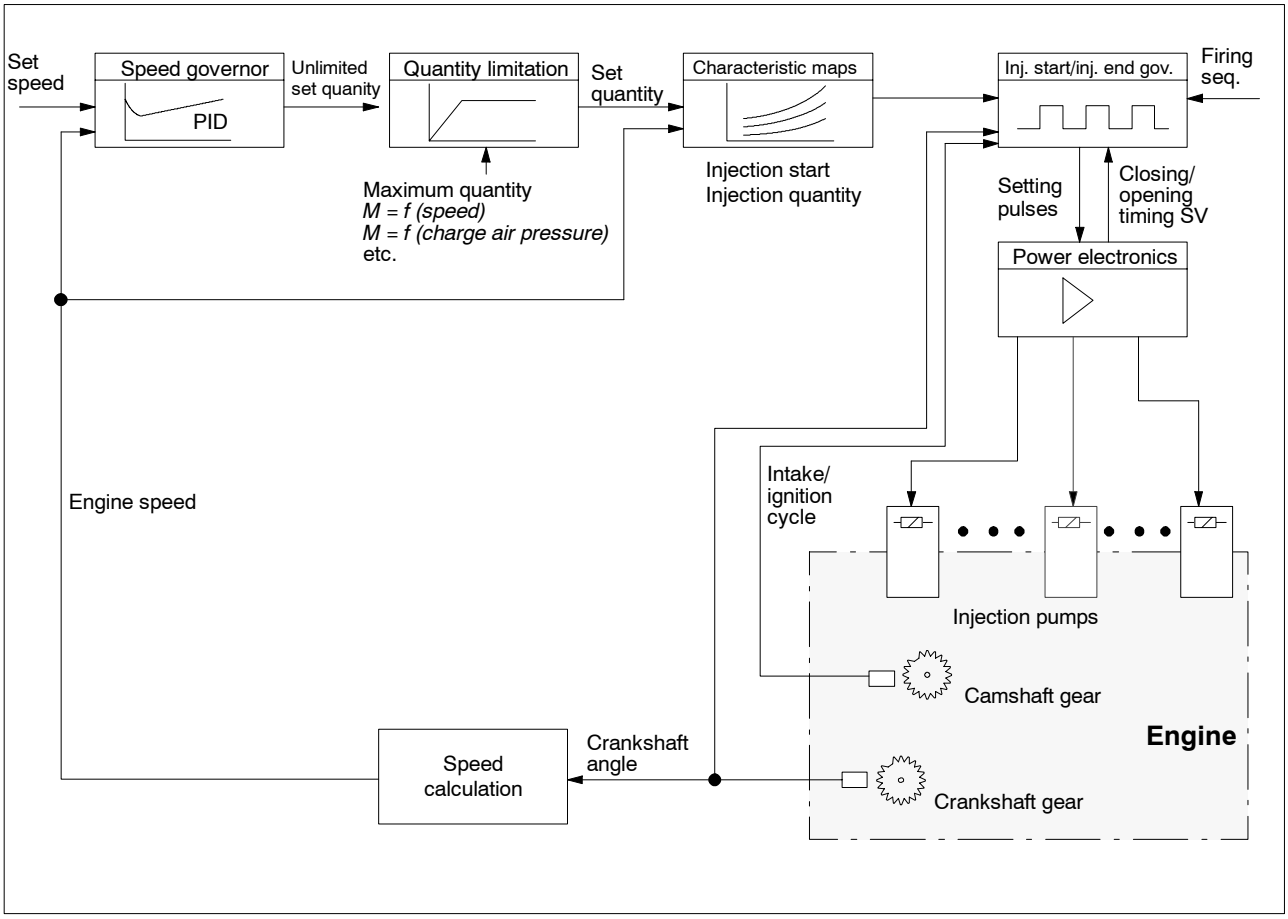

Fig. 46 : Control loop

The speed governor compares the speed setting with the current engine speed. It adapts its output signal (set injection quantity) to compensate the difference in case of deviation. The PID characteristics ensure a fast response to changes and precise speed setting.

Dynamic quantity limitation depending on the operating point protects the engine against overloading.

The set quantity after quantity limitation represents the input signal for the mapped injection start/injection end governor. The power electronics control the injection valves of the individual cylinders in accordance with these settings.

Katolight Service - Master Repair Manual - Page 3273

1.4.6.5 Angle measuring/determining engine timing

The timing is defined in the electronics on the basis of information from angle measuring sensors on two measuring gears. One measuring gear is mechanically coupled to the crankshaft and one to the camshaft.

The crankshaft sensor detects the precise angle of the crankshaft under normal operating conditions in order to determine the injection timing and thus derive the engine speed.

The camshaft sensor allows the intake and ignition cycles to be differentiated in normal operation.

Crankshaft:

The measuring gear on the crankshaft turns at the same speed as the engine. A pulse is generated in the inductive sensor (channel KW1) by each tooth on the measuring gear. The angle of the crankshaft can be determined by counting the pulses from the sensor. Counting is synchronized by a tooth gap (i.e. a pulse missing at the sensor) at a defined angle.

Camshaft:

The measuring gear on the camshaft turns at half the speed of the engine. Engine Control Unit ECU only evaluates the tooth gap in governing mode.

The electronics differentiate between the intake and ignition cycle of cylinder A1 with the help of this tooth gap.

Katolight Service - Master Repair Manual - Page 3274

1.4.6.6 Speed droop

1.4.6.6.1 Speed droop calculation

Speed droop influences the effective set speed depending on engine output. The maximum, speed-dependent engine output is limited by the DBR curve. Speed droop does not influence the set speed at the 100% output point. The effective set speed increases at lower outputs. This means that several engines operating in a network can be harmonized in this way.

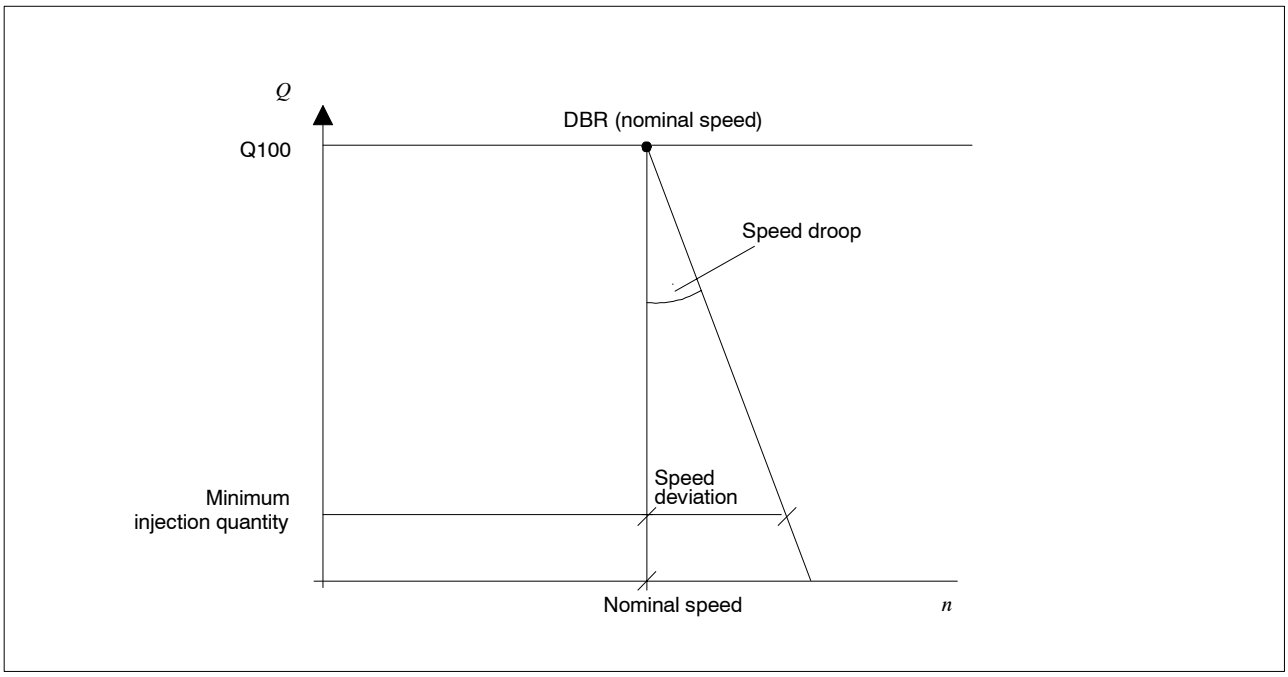

Fig. 47 : Speed droop

1.4.6.6.2 Switchable speed droop

Two different speed droops can be selected on Engine Control Unit ECU for genset applications. The choice of which speed droop is to be active depends on whether the genset operates on a “standalone” basis (i.e. independently) or whether it supplies a common busbar operating in parallel with other gensets in a network.

The speed droop can be selected by a binary input (BE 4) on Engine Control Unit ECU.

Fig. 48 illustrates the principle engine governing range and the effects of adjustable speed droop (load-dependent adjustment of the set speed value).

Speed droop is also used in order to balance loading on coupled drives. The speed droop is set individually for each plant and can be modified using the dialog unit.

Katolight Service - Master Repair Manual - Page 3275

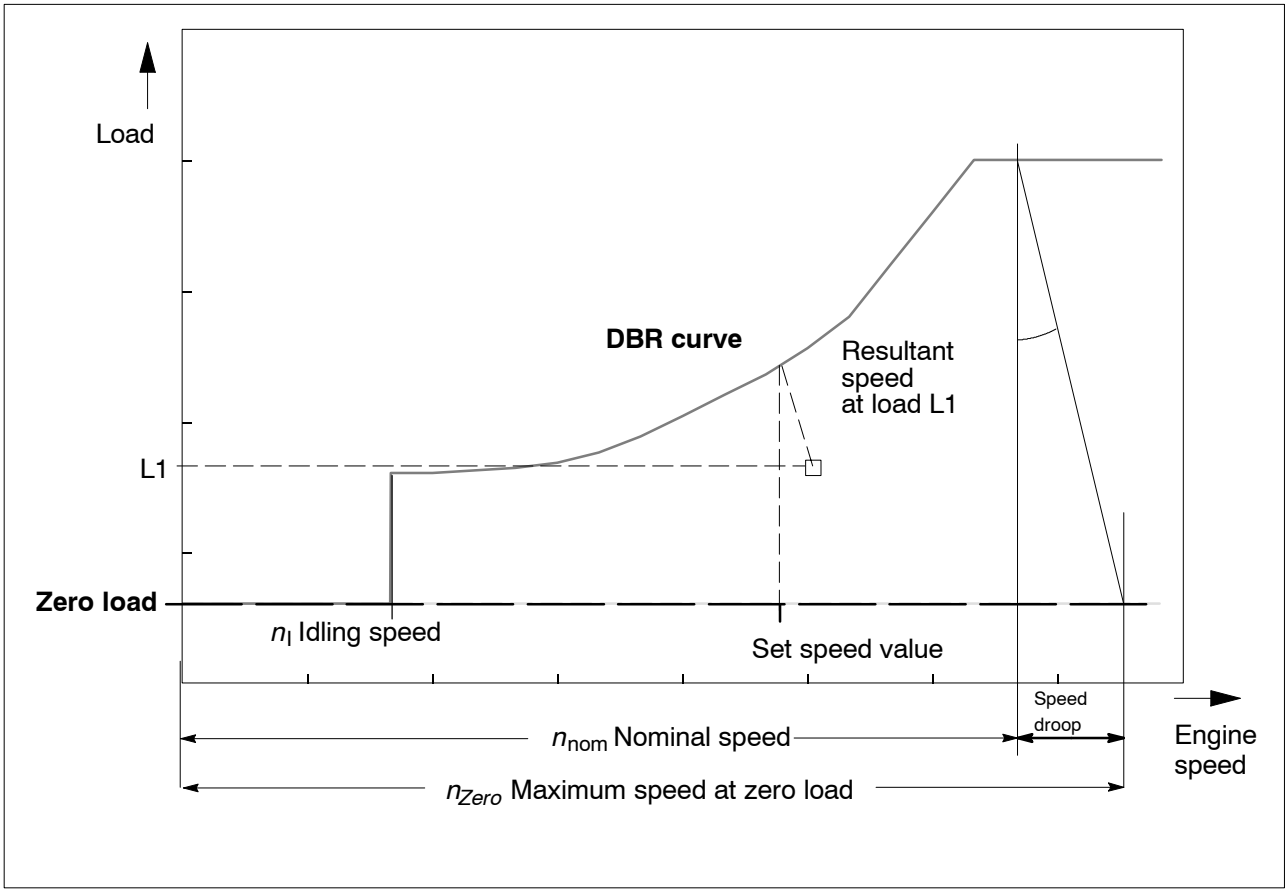

Fig. 48 : Graphic representation of the speed adjusting range and speed droop

Speed droop is defined as the relative change in speed when the engine is unloaded. Speed droop is referenced to nominal speed (= maximum speed at maximum power output). Every point in the operating range is influenced by a change in loading (see chap. 1.4.6.6.1).

$$\text{Speed droop} = \frac{\text{Maximum speed (zero load) } n_{Zero} - \text{Nominal speed } n_{nom}}{\text{Nominal speed } n_{nom}} \times 100\ \%$$

Note: A sudden increase in speed is prevented by the “Switch constant speed” function on switching over the speed droop.

Katolight Service - Master Repair Manual - Page 3276

1.4.6.7 Power limitation (quantity limitation)

1.4.6.7.1 Dynamic quantity limitation

Dynamic quantity limitation, i.e. variable limitation of the fuel injected, is used to protect the engine against overloading and to optimize exhaust emission values. Engine Control Unit ECU determines the maximum injection quantity on the basis of preset and stored characteristic engine maps.

Limitations are:

- Speed-dependent fuel quantity limitation (DBR)
- Fuel quantity limitation as a function of fuel temperature
- Fuel quantity limitation in case of charger overspeeding

1.4.6.7.2 Fixed quantity limitation

Fixed quantity limitation is used to limit or reduce the power in order to protect the engine in case of

- Electronic fault
- Supply voltage out of range

1.4.6.7.3 Fuel quantity control during engine starting

The amount of fuel injected during engine starting increases from a preset initial value up to a defined value via a time ramp. The value is calculated using the function $q_{Inject} = f_{(speed)}$. The amount of fuel injected is thus limited as a function of speed in this way. This fuel quantity limitation is effective until idling speed is reached for the first time.

Katolight Service - Master Repair Manual - Page 3277

1.4.6.8 Speed setpoint handling

The speed setting (= speed setpoint) is the control variable for the engine speed control loop.

An internally programmed speed setpoint is approached when the engine is started (at a network frequency of 50 Hz: 1500 rpm; at a network frequency of 60 Hz: 1800 rpm).
Switching over to an external speed setting takes place automatically when the nominal speed has been reached.

The speed can be set in the following ways:

- Speed setting via an analog input:

  The set speed can be adjusted within a (configurable) range around the preset synchronizing speed (depending on the network frequency which is set).

  The voltage can either control only the speed window (e.g. 1 V ... 9 V changes the speed between 1400 rpm and 16000 rpm) or may cover the entire speed range (e.g. 1 V ... 9 V would adjust the speed between 800 rpm and 2000 rpm, in this case, however, all values which would lead to a speed below the lower limit or above the upper limit are ignored, i.e. the speed is adjusted between 1400 rpm and 1600 rpm with a voltage of between 5.0 V and 5.33 V in this case).

  The internal set speed follows the speed setting value applied via a configurable acceleration and deceleration curve (speed ramp). Should the signal fail, the last setting is retained or the engine is throttled back to idling speed.
  This response can be configured as desired.
  - Speed setting via CAN bus
  - Speed setting via an analog speed setting input (0 V ... 10 V), (0 ... 5 V)
  - Speed setting via an analog speed setting input (4 mA ... 20 mA)
  - Frequency input
- Setpoint processing via binary inputs “Set speed up” (BE 5)/“Set speed down” (BE 6):

  The set speed can also be adjusted within a (configurable) range around the set synchronizing speed (depending on the network frequency which is set) in this case. Briefly activating the corresponding optocoupler input for less than 0.3 s increases or decreases the set speed by 1 rpm.
  The set speed is adjusted automatically at a configurable rate if the input is activated for more than 0.3 s (e.g. at approx. 10 rpm per second).

Katolight Service - Master Repair Manual - Page 3278

1.4.7 Safety features

1.4.7.1 Safety shutdowns

Safety shutdowns are activated by the engine safety system in case of

- Limit value violation
- Sensor defect (depending on configuration)

This applies to the following measuring points:

- Engine speed/overspeeding
- Engine lube oil pressure
- Coolant level (configurable)
- Charge air coolant temperature
- Coolant temperature (configurable)
- Charge air temperature

The scope of measuring points may deviate from the standard settings depending on the order.

Note: All safety shutdowns (with the exception of overspeeding) can be suppressed by activating “Override” input (BE 8).

The occurrance of alarms which are relevant to safety is recorded even when the “Override” input is active.

Katolight Service - Master Repair Manual - Page 3279

Engine Control Unit ECU response to high coolant temperature

The “Coolant temperature alarm” output is activated if the coolant temperature exceeds T_{Limit1} and a “Combined red alarm” is signalled.

Note: The switchgear controller must open the generator switch when the “Combined red alarm” is signalled (to be configured by the client).

The engine can now be left to cool down in the course of a certain (configurable) period of time. The engine is shut down when this time has expired. Furthermore, the temperature is monitored for any further increase in temperature during the cooling down phase. The engine is shut down immediately if a (configurable) difference in temperature is exceeded.

The “Combined red alarm” output is activated in case of sensor fault. The cooling down phase commences and the engine is subsequently shut down.

The engine is shut down immediately if the coolant temperature exceeds $T_{Limit12}$.

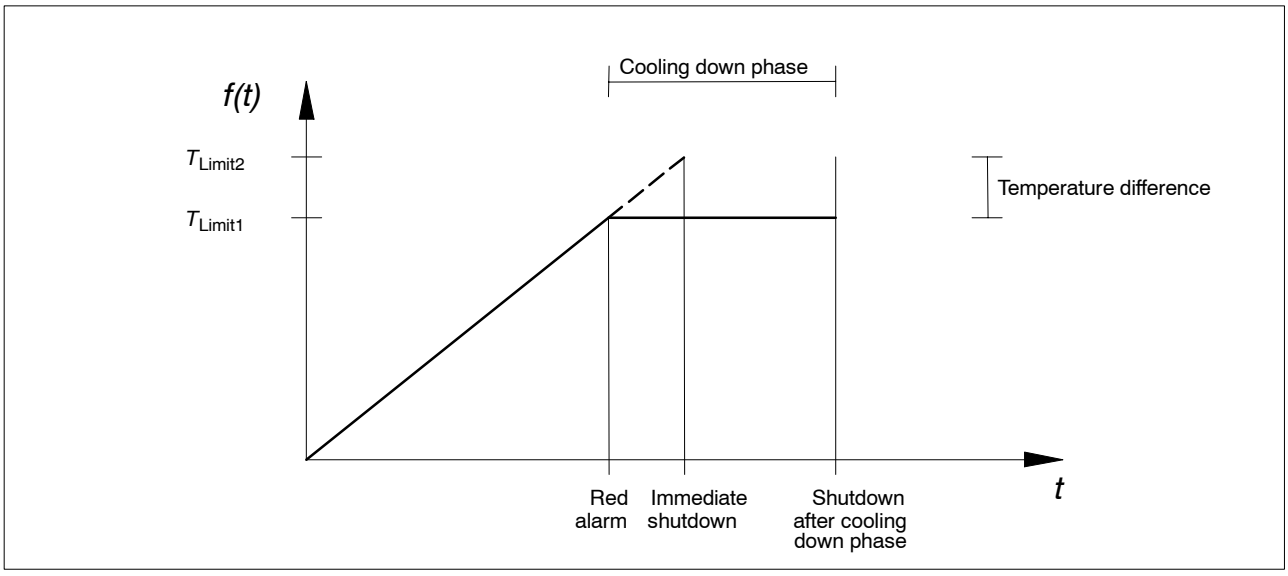

Fig. 49 : Response of Engine Control Unit ECU to high coolant temperature

Katolight Service - Master Repair Manual - Page 3280

1.4.7.1.1 Integral Test System (ITS)

The Integral Test System ITS monitors all vital functional areas of Engine Control Unit ECU and the connected electrical and electronic components:

- Electronics of the actual engine governor inside Engine Control Unit ECU
- Sensors
- Actuators
- Bus communication
- Power supply

The ITS detects faults as they occur, pinpoints them and signals them by means of combined alarms. Furthermore, a fault message is output via the CAN bus to a superordinate Monitoring and Control System (if applicable) where it can be displayed to the operator.

Faults which have occurred are stored for evaluation at a later date. They can be read out using the dialog unit.

Fault messages are stored in two memories:

- **Chronological memory**
  The fault message numbers are stored chronologically in the order of their appearance or disappearance together with the operating hours counter reading in a ring memory. The ring memory stores the last 80 setting and clearing processes.
- **Statistical memory**
  The appearance of fault messages is also counted in a statistical memory.
  A counter which can count up to max. 10000 is provided for each fault message number.

1.4.7.1.2 Monitoring of the electronics in the Engine Control Unit ECU

The hardware and software of Engine Control Unit ECU is designed to allow fault detection in the electronic system so that the operator can respond appropriately to these faults. Fault signals are also passed on.

The temperature inside the housing of Engine Control Unit ECU is monitored. Should the temperature rise above a limit value, the fault is signalled via the combined alarm output and on the CAN bus to a superordinate Monitoring and Control System (if applicable).

Katolight Service - Master Repair Manual - Page 3281

1.4.7.1.3 Sensor/actuator monitoring

The various sensor and actuator channels of the engine management system are designed to tolerate faults (e.g. short-circuit) as far as possible.

Faults such as wire break, short-circuit etc. are detected by a plausibility check and signalled to a superordinate Monitoring and Control System (if applicable) by means of a combined alarm.

1.4.7.1.4 Bus communication monitoring

Bus communication is monitored by plausibility and timeout checks. Any faults which are detected are signalled by means of a combined alarm and, if possible, on the CAN bus to a superordinate Monitoring and Control System (if applicable).

1.4.7.2 Overspeed test

Activating this input lowers the overspeed switching threshold such that the engine is shut down at any speed. This makes it possible to check that the overspeed shutdown function operates correctly.

Katolight Service - Master Repair Manual - Page 3282

Part 2

Operation

(This page intentionally blank)

Katolight Service - Master Repair Manual - Page 3284

Table of contents

2 Operation 1

2.1 Safety requirements 1

2.2 Operating a display 3

2.3 Other operating procedures 5

Katolight Service - Master Repair Manual - Page 3285

(This page intentionally blank)

Katolight Service - Master Repair Manual - Page 3286

2 Operation

2.1 Safety requirements

I M P O R T A N T :

These safety requirements shall be read and observed by all personnel involved in operation, care, maintenance, repair, installation or commissioning of the products described.

Furthermore, the following shall be observed:

- The safety requirements (if provided) in other relevant MTU manuals
- Warning and safety information and operating and limit values attached to the products as required
- National accident prevention and safety standards
- Appropriate regulations usual in the industry
- The safety notes (if provided) in the text of this manual

Conventions for safety notes in the text

Where necessary, this manual includes highlighted safety notes indicated by a signal word. These safety notes shall be observed to avoid injury or damage.



DANGER

This type of note indicates a danger which may lead to **injury** or **death.**



CAUTION

This type of note indicates a danger which may lead to **damage** or **destruction** of the product described or another part of the system.

Intended use and user qualifications

All devices and system components may only be put to their intended use.

Operation, maintenance, repair, installation and commissioning shall only be performed by qualified and authorized personnel.

Safety requirements for commissioning

Before first using the electronic product, it must be installed in accordance with the instructions and approved to MTU specifications.

Whenever the device or system is taken into operation

- All maintenance and repair work must have been completed
- Any loose parts must have been removed from rotating machine components
- All personnel must be clear of the danger zone represented by moving parts

Immediately after taking the device or system into operation, the control and display elements as well as the monitoring, signalling and alarm systems must be tested for proper operation.

Safety requirements for operation

The emergency procedures must be practiced on a regular basis.

The operator must be familiar with the control and display elements.

The operator must know the effects of any action he/she performs.

The operator must proceed with the individual steps as specified in the documentation.

During operation, the display elements and monitoring assemblies must be supervised with respect to current operating states, violation of limit values as well as warnings and alarm messages.

If a fault in the system is detected or signalled by the system, the appropriate steps must be taken immediately and the fault reported to the person in charge.

Every message must be evaluated immediately. Emergency countermeasures shall be taken immediately as required, e.g. emergency engine stopping.

2.2 Operating a display

Information about operating states of the propulsion line and the overall electronic system (i.e. Engine Control System ECS-5 and Monitoring and Control System MCS-5) can be called up on a number of screen pages on the display.

Operation of the display is menu-guided using the five function keys F1 to F5 underneath the display. Their respective functions vary depending on menu context.

Symbols displayed above the keys on the user interface indicate the current function of the function key directly below (see fig. 50).

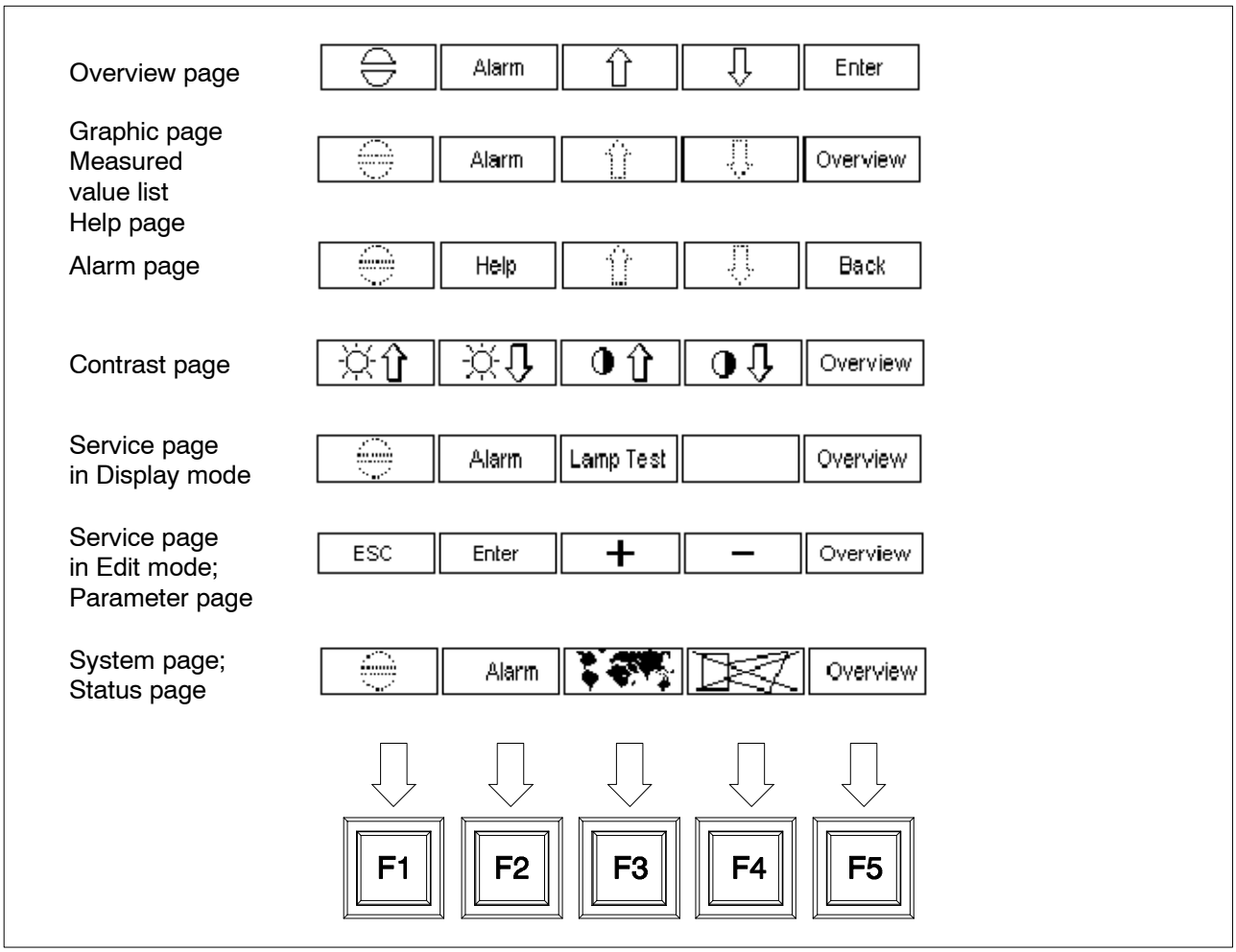

Fig. 50 : Function key assignment

Katolight Service - Master Repair Manual - Page 3289

Meaning of the symbols

The various symbols have the following meanings:

Symbol	Key	Description
	F1	Acknowledges alarms (shown on the display)
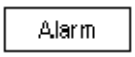	F2	Opens the Alarm page
	F3	Scrolls `Up` to select a menu option on the Overview page Scrolls `Up` page-by-page on graphic pages, Measured value list, Help page and Alarm page A dotted arrow indicates that the function key is inactive
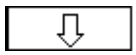	F4	Scrolls `Down` to select a menu option on the Overview page Scrolls `Down` page-by-page on graphic pages, Measured value list, Help page and Alarm page A dotted arrow indicates that the function key is inactive
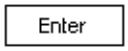	F5 F2	Opens the selected menu option on the Overview page On the Service page in Edit mode: Selects the input fields. The selected input field is represented inversely. This indicates that the input value is activated for processing
	F5	Opens the Overview page
	F2	Opens the Help page
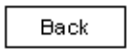	F5	Returns from the Alarm page to the previously selected page
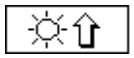	F1	`Increase brightness` Increases the brightness of the LCD background illumination, key illumination of function keys F1 to F5 and the LED for the operating state indicator in stages
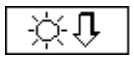	F2	`Decrease brightness` Decreases the brightness of the LCD background illumination, key illumination of function keys F1 to F5 and the LED for the operating state indicator in stages
	F3	`Increase contrast` Increases the contrast of the LCD display in stages
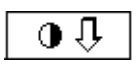	F4	`Decrease contrast` Decreases the contrast of the LCD display in stages
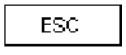	F1	Changes made to the activated variables are not saved in the memory and the input field is exited

Symbol	Key	Description
+	F3	Increases the input value
–	F4	Decreases the input value
Lamp Test	F3	Lamp test, all luminous pushbuttons and indicators on Local Operating Station LOS light up brightly
	F3	Language switching (e.g. German/English) The texts are stored in 2 languages
	F4	`Horn off` Silences the horn connected to the relay output if it is sounding

2.3 Other operating procedures

Other operating procedures depend on the system environment and the user interface involved.



Refer to the overall system documentation of the entire genset for details of these procedures.

Katolight Service - Master Repair Manual - Page 3291

(This page intentionally blank)

Katolight Service - Master Repair Manual - Page 3292

Part 3

Maintenance and repair

(This page intentionally blank)

Katolight Service - Master Repair Manual - Page 3294

Table of contents

3	**Maintenance and repair**	**1**
3.1	Safety requirements	1
3.2	General information about this manual	3
3.2.1	Task duration and personnel qualification	3
3.2.2	Terminology	3
3.2.3	Structure	4
3.3	Tools, expedients and consumables	5
3.3.1	For care and maintenance	5
3.3.2	For repair	5
3.3.3	Troubleshooting devices	6
3.4	Malfunctions	8
3.4.1	Safety instructions	8
3.4.2	Fault displays	9
3.4.2.1	Replacing Engine Control Unit ECU	40
3.4.2.1.1	Removing the housing of Engine Control Unit ECU from the engine	42
3.4.2.1.2	Opening the cover on Engine Control Unit ECU	43
3.4.2.1.3	Transferring memory modules in Engine Control Unit ECU	44
3.4.2.1.4	Fitting the cover on Engine Control Unit ECU	46
3.4.2.1.5	Mounting the housing of Engine Control Unit ECU on the engine	47
3.4.2.2	Using the MDEC simulator	49
3.5	Maintenance	51
3.5.1	Maintenance overview	51
3.5.2	Visual inspection, mechanical testing and cleaning	52
3.5.2.1	Cleaning device(s) externally	53
3.5.2.2	Checking device(s) externally	53
3.6	Structure of Engine Control Unit ECU 4	54
3.6.1	External structure	54
3.6.2	Internal structure	56

Katolight Service - Master Repair Manual - Page 3295

(This page intentionally blank)

Katolight Service - Master Repair Manual - Page 3296

3 Maintenance and repair

3.1 Safety requirements

I M P O R T A N T :

These safety requirements shall be read and observed by all personnel involved in operation, care, maintenance, repair, installation or commissioning of the products described.

Furthermore, the following shall be observed:

- The safety requirements (if provided) in other relevant MTU manuals
- Warning and safety information and operating and limit values attached to the products as required
- National accident prevention and safety standards
- Appropriate regulations usual in the industry
- The safety notes (if provided) in the text of this manual

Conventions for safety notes in the text

Where necessary, this manual includes highlighted safety notes indicated by a signal word. These safety notes shall be observed to avoid injury or damage.



DANGER

This type of note indicates a danger which may lead to **injury** or **death.**



CAUTION

This type of note indicates a danger which may lead to **damage** or **destruction** of the product described or another part of the system.

Intended use and user qualifications

All devices and system components may only be put to their intended use.

Operation, maintenance, repair, installation and commissioning shall only be performed by qualified and authorized personnel.

Safety requirements for maintenance and repair

Maintenance and repair work shall be performed exactly and on schedule to ensure constant readiness and reliability of the product.

Authorization must be obtained from the person in charge prior to commencing maintenance and repair work and switching off parts of the electronic system required for this.

Prior to working on assemblies, the power supply of the appropriate areas must be switched off and secured against unauthorized switching on.
Any measures requiring power supply are expressly defined as such at the appropriate place in the manual.

Maintenance and repair work shall be performed in accordance with the instructions in the manual by authorized personnel.

Suitable tools, special MTU tools if necessary, shall be used for maintenance and repair work.

Genuine spare parts only may be used to replace defective components or assemblies. The manufacturer accepts no liability whatsoever for damage caused by using other spare parts. The manufacturer's warranty shall also be voided in such cases.

The manufacturer shall not be held liable if unauthorized changes or modifications are made to the product and the warranty shall be voided.

Spare parts shall be stored properly prior to replacement, i.e. particularly protected against the ingress of moisture. Defective electronic components and assemblies must be suitably packed when despatched for repair, i.e. particularly protected against the ingress of moisture and impact and wrapped in antistatic foil if necessary.

Inform the MTU service department or its representative in case of damage which cannot be rectified by plant personnel.

On completion of maintenance and repair work, ensure that no superfluous parts (tools etc.) remain inside the device or system.

On completion of repair work, the device or system must be subjected to appropriate checks to verify functionality. Separate testing of the repaired component without system integration is inadequate.

When working on the engine, suitable measures shall be taken to prevent accidental starting.

Katolight Service - Master Repair Manual - Page 3298

3.2 General information about this manual



Refer to order-specific documents (e.g. drawings) if necessary in case of deviations from the information provided in this manual.

3.2.1 Task duration and personnel qualification

Information about task duration is only intended to serve as a guide and is based on the work being carried out under normal working conditions. The amount of time required may deviate from the times stated in some cases.

The abbreviations explained in the preface to this manual are used to specify the minimum qualifications for users carrying out the work described.

Familiarity with the contents of Part 1 of this manual is pre-requisite.

3.2.2 Terminology

The following terms are used in this manual:

- **Task:**
  A group comprising several activities. Performing all activities – not necessarily in a specific order results in the task being fulfilled.
- **Activity:**
  Sequence of steps to be carried out in a specific order. The result of each activity is a part of the superordinate task.
- **Step:**
  The sequential execution of certain steps forms a superordinate activity.
- **Work:**
  Generic term for tasks, activities and steps.

Katolight Service - Master Repair Manual - Page 3299

3.2.3 Structure

The chapters in this manual describing specific work are structured as shown in fig. 51.

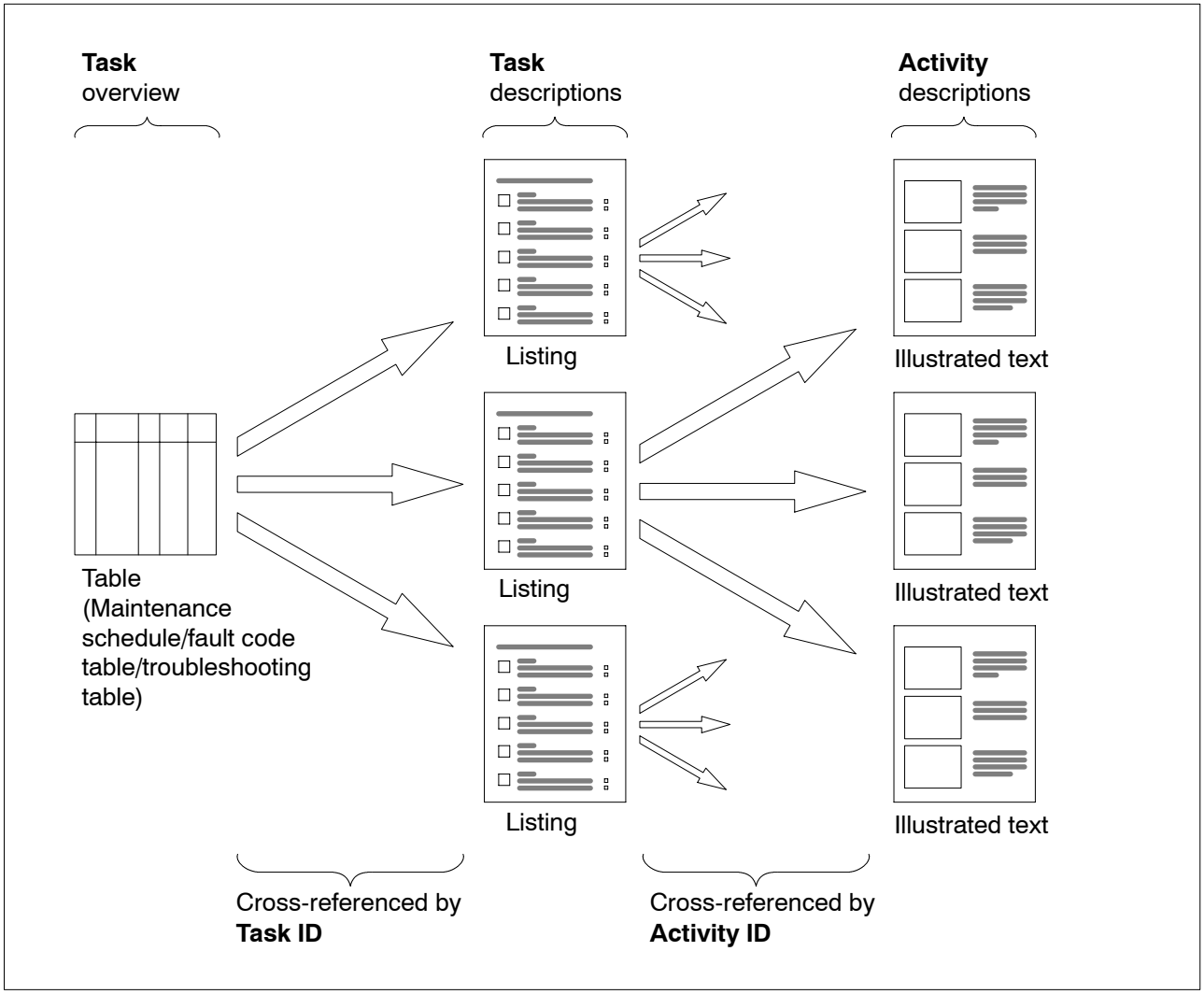

Fig. 51 : Structure of the sub-chapters and terminology

Checkboxes are provided on the right margin of task description pages allowing each item to be checked off.

Note: Task and activity descriptions are modular and often formulated in general terms (e.g. for a plant with several control consoles). The information provided must be applied to the plant concerned by analogy.

3.3 Tools, expedients and consumables

3.3.1 For care and maintenance

The following tools, expedients and consumables are required to perform the care and maintenance work described:

- Lint-free cleaning cloths (e.g. soft paper towels)
- Cleaning agent for synthetic surfaces (non-corrosive, non-abrasive, solvent-free and grease-dissolving)

3.3.2 For repair

The following tools, expedients and consumables are required to perform the repair work described:

- Tool kit SME 4-01 (see MTU manual “Tool kit SME 4-01, Part 5”)
- Cable ties in various lengths
- Self-adhesive insulating tape

3.3.3 Troubleshooting devices

The following (optional) devices facilitate troubleshooting on engine management system MDEC for stationary generator engines:

- MDEC simulator (see fig. 52)
- Dialog unit (see fig. 53)

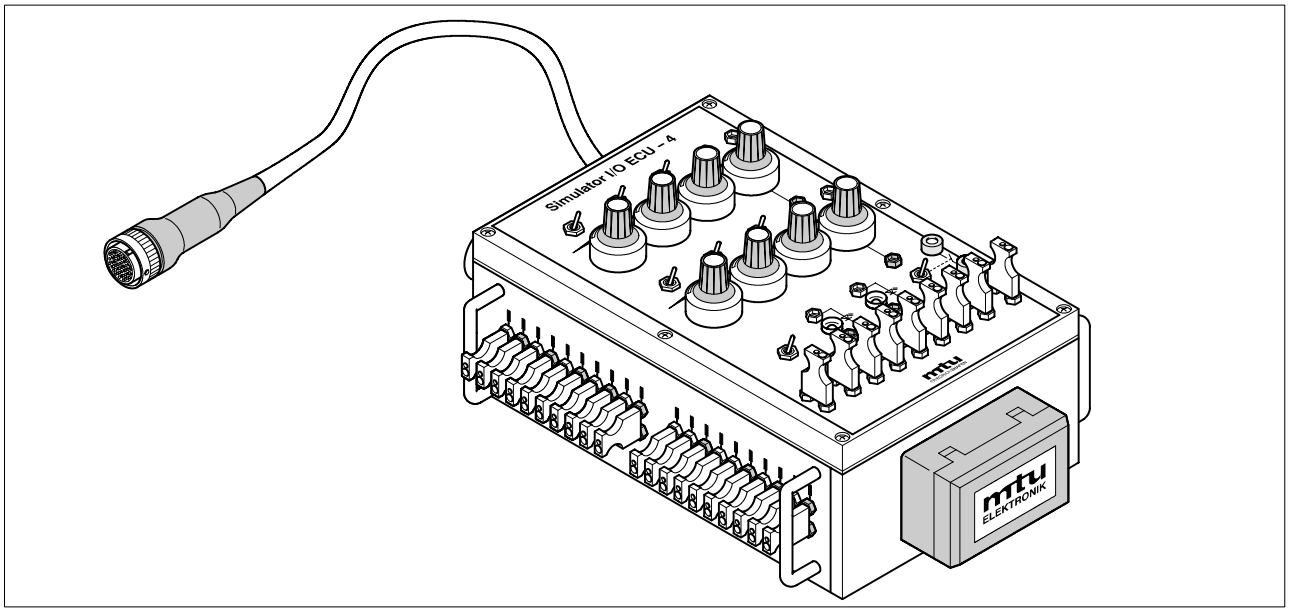

Fig. 52 : MDEC simulator for connector X2

The use of the MDEC simulator is described in MTU document “ECS-5 Testing and simulation device ECU-4 (X2)”, document no. E 532 085.

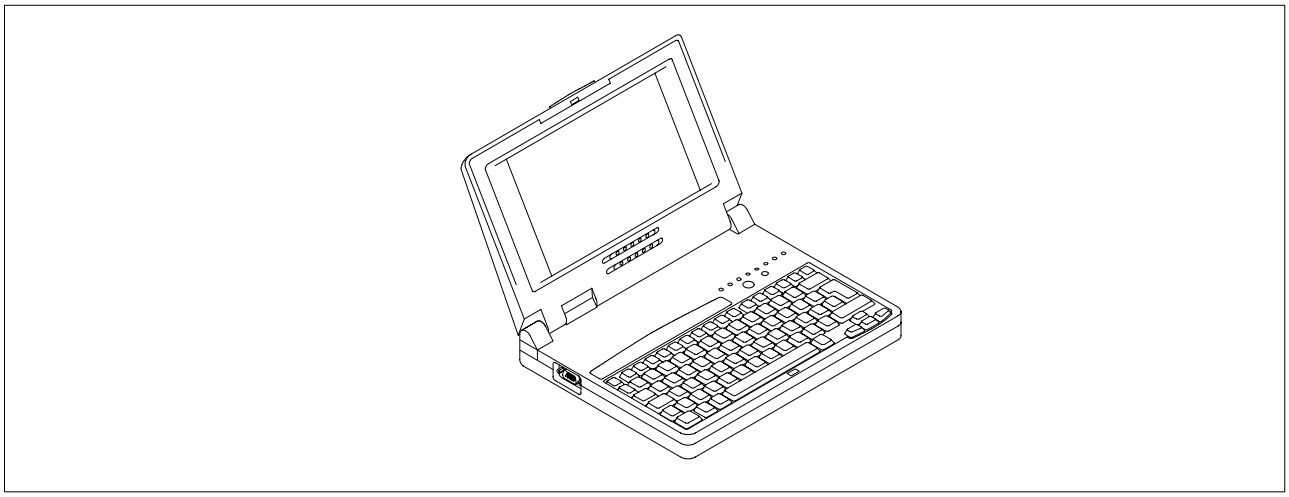

Fig. 53 : Dialog unit

Use of the dialog unit is described in MTU documentation “DiaSys 2.xx”, document no. E 531 920.

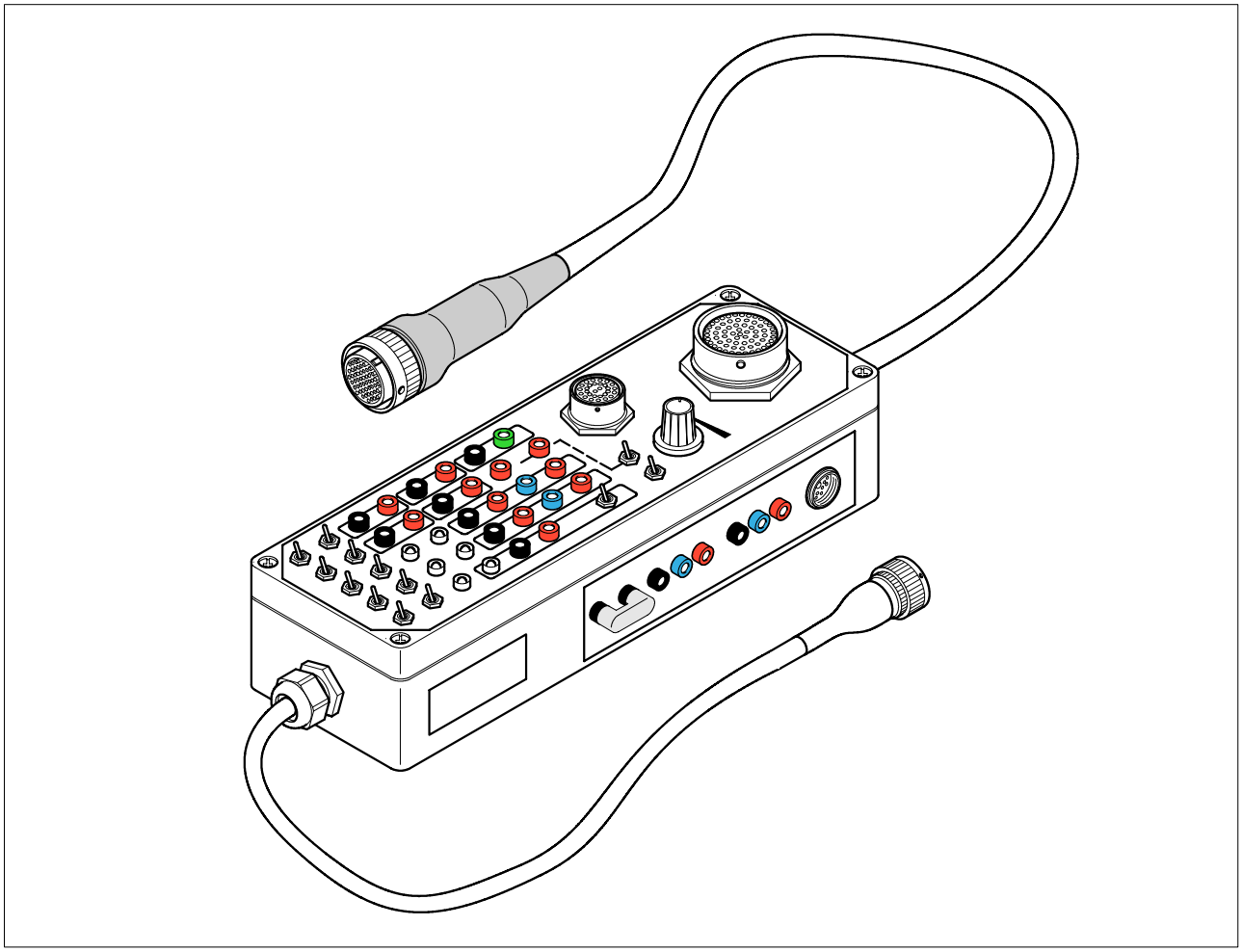

Fig. 54 : MDEC simulator for connector X1

Note: The MDEC simulator for X1 is used in a similar way to the MDEC simulator for connector X2. However, the cable from connector X6 must also be looped through the simulator to provide the power supply.

Detailed information about this simulator is provided in MTU documentation “Service and workshop equipment catalog”, document no. E 531 759.

3.4 Malfunctions

3.4.1 Safety instructions



DANGER

Injury hazard!
Before commencing repair work, always:
Stop the engine and **lock out to preclude starting!**



DANGER

System failure possible!
Short-circuits caused by carrying out repair work on devices with the operating voltage switched on may result in total system failure during operation. The engine can no longer be started as a result.
Therefore:
Always switch off the **operating voltages** for all devices and **lock out to preclude switching on** before commencing repair work!



DANGER

Total system failure possible!
Leaking devices of the overall system may lead to sudden system failure. The engine can no longer be started as a result.
Therefore: Ensure that no water ingresses the housings on carrying out repair work and use seals as intended.

3.4.2 Fault displays

Faults in the overall MDEC system are indicated at the devices of the MCS-5 sub-system as follows:

- Fault code numbers (generated inside Engine Control Unit ECU) on a 4-figure 7-segment display in PIM A 511
- Plain text fault display in the form of text messages on display DIS (option)



CAUTION

Rectify faults as soon as possible even if they would appear to be insignificant in order to avoid impairing operation of the plant or system failure.

Always check the following points first if a fault occurs when the overall system is switched on:

- Is it a phantom fault (e.g. because the system is in Local mode)?
- Have all the necessary requirements for the operating procedure, or for the control procedure of a superordinate system, during which the fault occurs been fulfilled?
- Does a fault message appear on the display in PIM A 511 ?
  If so, countermeasures can be determined by consulting the appropriate fault code table.

Table

The number of the fault code on the display is listed in the first column “No.” in the table.

The precise text message is listed in the second column “Fault display” in the table. This corresponds with the fault code displayed on the DIS display (option).

The message is explained in the third column “Meaning/cause” and the reason for the message is explained.

The fourth column “Counteraction” in the table lists measures which can be taken on-site by the operator or other information about how to proceed.

The last two columns indicate which fault can appear for which series.

Malfunctions which may be caused by mechanical fault are referenced to the engine documentation with “➧ Engine documentation”.

“➧ Electronics service” indicates that further testing and rectification are a matter for trained service personnel or experienced users with access to the appropriate documents (e.g. wiring diagrams).

Note: “➧ Engine documentation” refers to the “Operating instructions for engine series 2000”, Part E and Part G.

Katolight Service - Master Repair Manual - Page 3305

No.	Fault display	Meaning/cause	Counteraction	2000	4000
000	*(Not used)*				
001	*(Not used)*				
002	*(Not used)*				
003	*(Not used)*				
004	*(Not used)*				
005	L1 T-CHARGE AIR	Charge air temperature too high (first limit value overshot)	➧ Engine documentation	✓	✓
006	L2 T-CHARGE AIR	Charge air temperature too high (second limit value overshot)	➧ Engine documentation	✓	✓
007	*(Not used)*				
008	*(Not used)*				
009	L1 T-INTERCOOLER	Charge air coolant temperature too high (Limit1 overshot)	➧ Engine documentation	✓	✓
010	*(Not used)*				
011	*(Not used)*			✓	
012	*(Not used)*				
013	*(Not used)*				
014	*(Not used)*				
015	L1 P-LUBE OIL	Lube oil pressure too low (first limit value undershot)	➧ Engine documentation	✓	✓
016	L2 P-LUBE OIL	Lube oil pressure too low (second limit value undershot) → engine stop	➧ Engine documentation	✓	✓
017	*(Not used)*				
018	*(Not used)*				
019	*(Not used)*				
020	*(Not used)*				
021	*(Not used)*				
022	*(Not used)*				

No.	Fault display	Meaning/cause	Counteraction	2000	4000
023	L1 COOLANT LEVEL	Coolant level too low, message appears simultaneously with no. 24	Check coolant level in expansion tank ➧ Engine documentation	✓	✓
024	L2 COOLANT LEVEL	Coolant level too low, message appears simultaneously with no. 23	Check coolant level in expansion tank ➧ Engine documentation	✓	✓
025	*(Not used)*				
026	*(Not used)*				
027	*(Not used)*				
028	*(Not used)*				
029	*(Not used)*				
030	ENGINE OVERSPEED	Engine overspeed → emergency stop	Restart the engine, eliminate cause of overspeeding	✓	✓
031					
032	*(Not used)*				
033	L1 P-FUELFILTER DIFF	Fuel differential pressure too high	Check filter ➧ Engine documentation	✓	
034	*(Not used)*				
035	*(Not used)*				
036	*(Not used)*				
037	*(Not used)*				
038	*(Not used)*				
039	*(Not used)*				
040	*(Not used)*				
041	*(Not used)*				
042	*(Not used)*				
043	*(Not used)*				
044	L1 LEVEL INTER-COOLER	Charge air coolant level too low, message appears simultaneously with no. 45	Check coolant level ➧ Engine documentation		✓
045	L2 LEVEL INTER-COOLER	Charge air coolant level too low, message appears simultaneously with no. 44	Check coolant level ➧ Engine documentation		✓

Katolight Service - Master Repair Manual - Page 3307

No.	Fault display	Meaning/cause	Counteraction	2000	4000
046	*(Not used)*				
047	*(Not used)*				
048	*(Not used)*				
049	*(Not used)*				
050	*(Not used)*				
051	L1 T-LUBE OIL	Lube oil temperature too high (first limit value overshot)	➧ Engine documentation	✓	✓
052	L2 T-LUBE OIL	Lube oil temperature too high (second limit value overshot)	➧ Engine documentation	✓	✓
053	*(Not used)*				
054	*(Not used)*				
055	*(Not used)*				
056	*(Not used)*				
057	*(Not used)*				
058	*(Not used)*				
059	*(Not used)*				
060	*(Not used)*				
061	*(Not used)*				
062	*(Not used)*				
063	*(Not used)*				
064	*(Not used)*				
065	L1 P-FUEL	Fuel infeed pressure too low (first limit value undershot)	Check low pressure fuel side ➧ Engine documentation		✓
066	L2 P-FUEL	Fuel infeed pressure too low (second limit value undershot)	Check low pressure fuel side ➧ Engine documentation		✓
067	L1 T-COOLANT	Coolant temperature too high (first limit value overshot); warning	➧ Engine documentation	✓	✓
068	L2 T-COOLANT	Coolant temperature too high (second limit value overshot); shutdown	➧ Engine documentation	✓	✓

Katolight Service - Master Repair Manual - Page 3308

No.	Fault display	Meaning/cause	Counteraction	2000	4000
069	L1 T-EXTERN 1	Alarm 'First limit value violated' for ext. temperature channel 1	The measured value is read in via the CAN. The alarm is handled in MDEC.	✓	✓
070	L2 T-EXTERN 1	Alarm 'Second limit value violated' for ext. temperature channel 1	The measured value is read in via the CAN. The alarm is handled in MDEC.	✓	✓
071	L1 T-EXTERN 2	Alarm 'First limit value violated' for ext. temperature channel 2	The measured value is read in via the CAN. The alarm is handled in MDEC.	✓	✓
072	L2 T-EXTERN 2	Alarm 'Second limit value violated' for ext. temperature channel 2	The measured value is read in via the CAN. The alarm is handled in MDEC.	✓	✓
073	L1 P-EXTERN 1	Alarm 'First limit value violated' for ext. pressure channel 1	The measured value is read in via the CAN. The alarm is handled in MDEC.	✓	✓
074	L2 P-EXTERN 1	Alarm 'Second limit value violated' for ext. pressure channel 1	The measured value is read in via the CAN. The alarm is handled in MDEC.	✓	✓
075	L1 P-EXTERN 2	Alarm 'First limit value violated' for ext. pressure channel 2	The measured value is read in via the CAN. The alarm is handled in MDEC.	✓	✓
076	L2 P-EXTERN 2	Alarm 'Second limit value violated' for ext. pressure channel 2	The measured value is read in via the CAN. The alarm is handled in MDEC.	✓	✓
077	LIM EXT.COOLANT LEV.	Alarm from external coolant level monitor	The measured value is read in via the CAN. The alarm is handled in MDEC.	✓	✓
078	LIM INTERCOOLER LEV.	Alarm from external charge air coolant level monitor	The measured value is read in via the CAN. The alarm is handled in MDEC.	✓	✓
079	L Bin-EXTERN 3	Alarm from external binary channel 3 (plant)	The measured value is read in via the CAN. The alarm is handled in MDEC.	✓	✓
080	L Bin-EXTERN 4	Alarm from external binary channel 4 (plant)	The measured value is read in via the CAN. The alarm is handled in MDEC.	✓	✓

Katolight Service - Master Repair Manual - Page 3309

No.	Fault display	Meaning/cause	Counteraction	2000	4000
081	RAIL LEAKAGE	Low pressure gradient on starting or high pressure gradient on stopping	High pressure system leaking, air in the system ➧ Engine documentation		✓
082	RAIL PRESSURE HIGH	Rail pressure above set value → DBR reduction, injection start later	Interface transformer malfunction or interface transformer wiring B48 ➧ Engine documentation		✓
083	RAIL PRESSURE LOW	Rail pressure below set value → DBR reduction	Interface transformer faulty or leakage in the high pressure system ➧ Engine documentation Message also appears when very large generators are in use and the rundown time exceeds 20 s ➧ Fault irrelevant		✓
084	*(Not used)*				
085	*(Not used)*				
086	*(Not used)*				
087	*(Not used)*				
088	*(Not used)*				
089	ENGINE SPEED LOW	Engine speed has fallen below 200 rpm → engine stop		✓	✓
090	IDLE SPEED LOW	Fault message during starting, idling speed not reached within the time defined in MP 169.05 (counting starts when speed limit in MP 170.04 is exceeded) → start termination	Check for further messages	✓	✓
091	RUN UP SPEED LOW	Fault message during starting, runup speed (MP 170.04) not reached within the time defined in MP 169.04 (counting starts on exceeding the speed limit 80 rpm) → start termination	Check for further messages	✓	✓

Katolight Service - Master Repair Manual - Page 3310

No.	Fault display	Meaning/cause	Counteraction	2000	4000
092	START SPEED LOW	Start error message, starter speed (MP 169.02) not reached within the time defined in MP 169.03 (counting starts when the starter is activated) → start termination	Check for further messages	✓	✓
093	PREHEAT TEMP. LIMIT2	Coolant preheating temperature too low (second limit value undershot) → start termination when MP 170.19 “No Start Break Preheat” is not set	Preheating temperature not reached	✓	✓
094	PREHEAT TEMP. LIMIT1	Coolant preheating temperature too low (first limit value undershot)	Preheating temperature not reached	✓	✓
095	*(Not used)*				
096	*(Not used)*				
097	*(Not used)*				
098	*(Not used)*				
099	DUMMY FAILURE	Dummy			✓
100	EDM NOT VALID	Measuring point data checksum error in EDM	◗ Electronics service	✓	✓
101	IDM NOT VALID	Measuring point data checksum error in IDM	◗ Electronics service	✓	✓
102	INVALID FUEL CONS. 1	Accumulated fuel consumption checksum error in EDM (redundant data record 1)	◗ Electronics service	✓	✓
103	INVALID FUEL CONS. 2	Accumulated fuel consumption checksum error in EDM (redundant data record 2)	◗ Electronics service	✓	✓
104	OP HOURS1 NOT VALID	Operating hours counter checksum error in EDM	◗ Electronics service	✓	✓
105	OP HOURS2 NOT VALID	Operating hours counter checksum error in IDM	◗ Electronics service	✓	✓

Katolight Service - Master Repair Manual - Page 3311

No.	Fault display	Meaning/cause	Counteraction	2000	4000
106	**ERR REC1 NOT VALID**	Fault memory checksum error in EDM (redundant data record 1)	➧ Electronics service	✓	✓
107	**ERR REC2 NOT VALID**	Fault memory checksum error in EDM (redundant data record 2)	➧ Electronics service	✓	✓
108	*(Not used)*				
109	*(Not used)*				
110	*(Not used)*				
111	*(Not used)*				
112	*(Not used)*				
113	*(Not used)*				
114	*(Not used)*				
115	*(Not used)*				
116	*(Not used)*				
117	*(Not used)*				
118	**L1 SUPPLY VOLT. LOW**	If the supply voltage is below set lower limit value 1 (MP 101.01) the value calculated from the DBR curve is multiplied by 0.8 and injection start is delayed by 5°	Check battery/generator	✓	✓
119	**L2 SUPPLY VOLT. LOW**	If the supply voltage is below set lower limit value 2 (MP 101.03) the value calculated from the DBR curve is multiplied by 0.8 and injection start is delayed by 5°	Check battery/generator	✓	✓
120	**L1 SUPPLY VOLT. HIGH**	If the supply voltage is above set upper limit value 1 (MP 102.01) the value calculated from the DBR curve is multiplied by 0.8 and injection start is delayed by 5°	Check battery/generator	✓	✓

No.	Fault display	Meaning/cause	Counteraction	2000	4000
121	L2 SUPPLY VOLT. HIGH	If the supply voltage is above the set upper limit value 2 (MP 102.03) the engine is stopped, if configured (in MP 102.14 = T)	Check battery/generator	✓	✓
122	L1 T-ELECTRONIC	ECU temperature too high (first limit value exceeded)	Check electronics environment (heat accumulation)	✓	✓
123	*(Not used)*				
124	*(Not used)*				
125	*(Not used)*				
126	*(Not used)*				
127	*(Not used)*				
128	*(Not used)*				
129	*(Not used)*				
130	*(Not used)*				
131	*(Not used)*				
132	*(Not used)*				
133	*(Not used)*				
134	15V POS ECU DEFECT	Internal electronics failure → engine stop due to electronics failure	Replace Engine Control Unit ECU See ID: T-E-G24-0001 Page 40	✓	✓
135	*(Not used)*				
136	15V NEG ECU DEFECT	Internal electronics failure → engine stop due to electronics failure	Replace Engine Control Unit ECU See ID: T-E-G24-0001 Page 40	✓	✓

Katolight Service - Master Repair Manual - Page 3313

No.	Fault display	Meaning/cause	Counteraction	2000	4000
137	L1 5V BUFFER TEST	This fault can have various causes: 1. Pressure sensor fault 2. Sensor wiring 3. Internal electronics failure	Fault analysis for internal electronic fault: Disconnect connectors X2 and X3, ECU is faulty if fault message remains. Fault analysis of pressure sensors: Disconnect pressure sensors one after the other and pinpoint which sensor causes the fault. If both measures prove unsuccessful the fault lies in the cable harness.	✓	✓
138	SENSORPOWERDEFECT	This fault can have various causes: 1. Pressure sensor fault 2. Sensor wiring 3. Internal electronics failure	Fault analysis for internal electronic fault: Disconnect connectors X2 and X3, ECU is faulty if fault message remains. Fault analysis of pressure sensors: Disconnect pressure sensors one after the other and pinpoint which sensor causes the fault. If both measures prove unsuccessful the fault lies in the cable harness.	✓	✓
139	L1 TE BUFFER TEST	Internal electronics failure → Sensor defect – alarm for dependent sensors, temperature values are set to default values	1. Sensor defect ➧ Electronics service 2. Electronics faulty Replace Engine Control Unit ECU See ID: T-E-G24-0001 Page 40	✓	✓
140	TE BUF. ECU DEFECT	Internal electronics failure → Sensor defect – alarm for dependent sensors, temperature values are set to default values	1. Sensor defect ➧ Electronics service 2. Electronics faulty Replace Engine Control Unit ECU See ID: T-E-G24-0001 Page 40	✓	✓
141	*(Not used)*				

No.	Fault display	Meaning/cause	Counteraction	2000	4000
142	**BANK1 ECU DEFECT**	Internal electronics failure → engine does not start, electronics faulty, test with engine at standstill only	Replace Engine Control Unit ECU See ID: T-E-G24-0001 Page 40	✓	✓
143	*(Not used)*				
144	**BANK2 ECU DEFECT**	Internal electronics failure → engine does not start, electronics faulty, test with engine at standstill only	Replace Engine Control Unit ECU See ID: T-E-G24-0001 Page 40	✓	✓
145	**15V_GOOD ECU DEFECT**	Internal electronics fault → engine stop due to electronics failure	Replace Engine Control Unit ECU See ID: T-E-G24-0001 Page 40	✓	✓
146	*(Not used)*				
147	**AD-TEST1 ECU DEFECT**	Internal electronics failure → engine stop due to electronics failure	Replace Engine Control Unit ECU See ID: T-E-G24-0001 Page 40	✓	✓
148	*(Not used)*				
149	**AD-TEST2 ECU DEFECT**	Internal electronics failure → engine stop due to electronics failure	Replace Engine Control Unit ECU See ID: T-E-G24-0001 Page 40	✓	✓
150	*(Not used)*				
151	**AD-TEST3 ECU DEFECT**	Internal electronics failure → engine stop due to electronics failure	Replace Engine Control Unit ECU See ID: T-E-G24-0001 Page 40	✓	✓
152	*(Not used)*				
153	*(Not used)*				
154	*(Not used)*				
155	*(Not used)*				
156	*(Not used)*				
157	*(Not used)*				
158	*(Not used)*				
159	*(Not used)*				
160	*(Not used)*				

Katolight Service - Master Repair Manual - Page 3315

No.	Fault display	Meaning/cause	Counteraction	2000	4000
161	*(Not used)*				
162	*(Not used)*				
163	*(Not used)*				
164	*(Not used)*				
165	*(Not used)*				
166	*(Not used)*				
167	*(Not used)*				
168	*(Not used)*				
169	*(Not used)*				
170	**MI MODULE FAIL**	Module in maintenance indicator faulty or missing	Check whether the MI is properly installed ➧ Electronics service	✓	✓
171	**MI NOT ACTIVE**	Maintenance indicator no longer active	Check whether the MI is properly installed ➧ Electronics service	✓	✓
172	*(Not used)*				
173	**MODULE WRITE LIMIT**	EEPROM write limit reached	➧ Electronics service	✓	✓
174	*(Not used)*				
175	*(Not used)*				
176	*(Not used)*				
177	*(Not used)*				
178	*(Not used)*				
179	*(Not used)*				
180	**CAN1 NODE LOST**	At least one Alive PDU on CAN 1 monitored by the ECU is missing → connected device out of order		✓	✓
181	**CAN2 NODE LOST**	At least one Alive PDU on CAN 2 monitored by the ECU is missing → connected device out of order		✓	✓
182	*(Not used)*				

No.	Fault display	Meaning/cause	Counteraction	2000	4000
183	CAN NO PU-DATA	A CAN mode is selected in which communication is initialized with the help of the PU data module. However, the required PU data module is missing or invalid.	Test the devices connected to the CAN Download again via BDM ➧ Electronics service	✓	✓
184	CAN PU-DATA EE-FAIL	A programming error occurred in one or both modules on attempting to copy a received PU data module in both EEPROM modules.	➧ Electronics service	✓	✓
185	CAN LESS MAILBO-XES	Insufficient receiving mail-boxes ready on one or both CAN controllers on initializing the receiving identifiers.	➧ Electronics service	✓	✓
186	CAN1 BUS OFF	CAN controller 1 in bus off state → automatic switching to CAN 2	Causes are e.g. short-circuit, major disruptions or baud rate incompatibility	✓	✓
187	CAN1 ERROR PAS-SIVE	CAN controller 1 has signalled a warning	Causes are e.g. missing nodes, minor disruptions or temporary bus overloading	✓	✓
188	CAN2 BUS OFF	CAN controller 2 in bus off state → automatic switching to CAN 1	Causes are e.g. short-circuit, major disruptions or baud rate incompatibility	✓	✓
189	CAN2 ERROR PAS-SIVE	CAN controller 2 has signalled a warning	Causes are e.g. missing nodes, minor disruptions or temporary bus overloading	✓	✓
190	*(Not used)*				
191	*(Not used)*				
192	*(Not used)*				
193	*(Not used)*				
194	*(Not used)*				
195	*(Not used)*				
196	*(Not used)*				

Katolight Service - Master Repair Manual - Page 3317

No.	Fault display	Meaning/cause	Counteraction	2000	4000
197	*(Not used)*				
198	*(Not used)*				
199	*(Not used)*				
200	*(Not used)*				
201	**SD T-COOLANT**	Sensor defect (coolant temperature)	Short-circuit or wire breakage, check sensor and wiring to B6 ➧ Electronics service	✓	✓
202	**SD T-FUEL**	Sensor defect (fuel temperature)	Short-circuit or wire breakage, check sensor and wiring to B33 ➧ Electronics service	✓	✓
203	**SD T-CHARGE AIR**	Sensor defect (charge air temperature)	Short-circuit or wire breakage, check sensor and wiring to B9 ➧ Electronics service	✓	✓
204	*(Not used)*				
205	**SD T-COOLANT INTERC.**	Sensor defect (charge air coolant temperature)	Short-circuit or wire breakage, check sensor and wiring to B26 ➧ Electronics service	✓	✓
206	*(Not used)*				
207	*(Not used)*				
208	**SD P-CHARGE AIR**	Sensor defect (charge pressure)	Short-circuit or wire breakage, check sensor and wiring to B10 ➧ Electronics service	✓	✓
209	*(Not used)*				
210	*(Not used)*				
211	**SD P-LUBE OIL**	Sensor defect (lube oil pressure)	Short-circuit or wire breakage, check sensor and wiring to B5 ➧ Electronics service	✓	✓
212	*(Not used)*				
213	*(Not used)*				
214	*(Not used)*				

Katolight Service - Master Repair Manual - Page 3318

No.	Fault display	Meaning/cause	Counteraction	2000	4000
215	SD P-RAIL FUEL	Sensor defect (Rail pressure) → high pressure governor emergency operation	Short-circuit or wire breakage, check sensor and wiring to B48 ◗ Electronics service		✓
216	SD T-LUBE OIL	Sensor defect (lube oil temperatur)	Short-circuit or wire breakage, check sensor and wiring to B7 ◗ Electronics service	✓	✓
217	*(Not used)*				
218	*(Not used)*				
219	*(Not used)*				
220	SD COOLANT LEVEL	Sensor defect (coolant level)	Short-circuit or wire breakage, check sensor and wiring to F33 ◗ Electronics service **Note:** If a sensor cable connector has been temporarily disconnected and then reconnected (e.g. next to the ECU), this fault message is signalled for a further approx. 60 min. The fault can be immediately cleared by switching the system off and back on.	✓	✓
221	*(Not used)*				
222	*(Not used)*				
223	SD LEVEL INTER-COOLER	Sensor defect (charge air coolant level)	Short-circuit or wire breakage, check sensor and wiring to F57 ◗ Electronics service **Note:** If a sensor cable connector has been temporarily disconnected and then reconnected (e.g. next to the ECU), this fault message is signalled for a further approx. 60 min. The fault can be immediately cleared by switching the system off and back on.		✓
224	*(Not used)*				

Katolight Service - Master Repair Manual - Page 3319

No.	Fault display	Meaning/cause	Counteraction	2000	4000
225	*(Not used)*				
226	*(Not used)*				
227	*(Not used)*				
228	*(Not used)*				
229	**SD ENG.SPEED SENSORS**	Sensor defect crankcase speed and sensor defect camshaft speed	Compare alarms 230 and 231	✓	✓
230	**SD CRANKSHAFT SPEED**	Sensor defect (crankshaft speed)	Short-circuit or wire breakage, check sensor and wiring to B13 ➧ Electronics service	✓	✓
231	**SD CAMSHAFT SPEED**	Sensor defect (camshaft speed)	Short-circuit or wire breakage, check sensor and wiring to B1 ➧ Electronics service	✓	✓
232	*(Not used)*				
233	*(Not used)*				
234	*(Not used)*				
235	*(Not used)*				
236	*(Not used)*				
237	*(Not used)*				
238	*(Not used)*				
239	*(Not used)*				
240	**SD P-FUEL**	Sensor defect (fuel pressure)	Short-circuit or wire breakage, check sensor and wiring to B34 ➧ Electronics service		✓
241	*(Not used)*				
242	*(Not used)*				
243	*(Not used)*				
244	*(Not used)*				

No.	Fault display	Meaning/cause	Counteraction	2000	4000
245	SD POWER SUPPLY	Internal ECU failure	Electronics faulty Replace Engine Control Unit ECU See ID: T-E-G24-0001 Page 40	✓	✓
246	SD T-ELECTRONIC	Internal ECU failure	Electronics faulty Replace Engine Control Unit ECU See ID: T-E-G24-0001 Page 40	✓	✓
247	*(Not used)*				
248	*(Not used)*				
249	*(Not used)*				
250	SD CAN SPEED DEMAND	Sensor defect CAN (Speed Demand) → no set speed signal, the speed is either set to a fault value (MP 180.05) or remains set to the actual speed depending on the setting at MP 180.14.		✓	✓
251	*(Not used)*				
252	*(Not used)*				
253	*(Not used)*				
254	*(Not used)*				
255	*(Not used)*				
256	*(Not used)*				
257	*(Not used)*				
258	*(Not used)*				
259	*(Not used)*				
260	*(Not used)*				
261	*(Not used)*				
262	*(Not used)*				
263	*(Not used)*				
264	*(Not used)*				

Katolight Service - Master Repair Manual - Page 3321

No.	Fault display	Meaning/cause	Counteraction	2000	4000
265	*(Not used)*				
266	SD SPEED DEMAND AN.	Sensor defect (analog speed setting) → speed is set to a fault value or remains set to the actual speed (adjustable, MP 180.14)	Short-circuit or wire breakage, check set speed transmitter and wiring ◗ Electronics service	✓	✓
267	SD SP.DEM.TEST BENCH	**Used in test stand mode only:** Sensor defect (analog speed setting) → speed is set to a fault value or remains set to the actual speed (adjustable, MP 180.14)	Short-circuit or wire breakage, check set speed transmitter and wiring ◗ Electronics service	✓	✓
268	*(Not used)*				
269	*(Not used)*				
270	*(Not used)*				
271	SD T-EXTERN 1	Missing Data CAN (T-EXTERN 1)	◗ Electronics service (external device faulty)	✓	✓
272	SD T-EXTERN 2	Missing Data CAN (T-EXTERN 2)	◗ Electronics service (external device faulty)	✓	✓
273	SD P-EXTERN 1	Missing Data CAN (P-EXTERN 1)	◗ Electronics service (external device faulty)	✓	✓
274	SD P-EXTERN 2	Missing Data CAN (P-EXTERN 2)	◗ Electronics service (external device faulty)	✓	✓
275	SD EXT.COOLANT LEVEL	Missing Data CAN (EXT.COOLANT LEVEL)	◗ Electronics service (external device faulty)	✓	✓
276	SD INTERCOOLER LEVEL	Missing Data CAN (charge air coolant level)	◗ Electronics service (external device faulty)	✓	✓
277	SD BIN-EXTERN 3	Missing Data CAN (BIN-EXTERN 3)	◗ Electronics service (external device faulty)	✓	✓
278	SD BIN-EXTERN 4	Missing Data CAN (BIN-EXTERN 4)	◗ Electronics service (external device faulty)	✓	✓
279	*(Not used)*				
280	*(Not used)*				
281	*(Not used)*				
282	*(Not used)*				
283	*(Not used)*				

Katolight Service - Master Repair Manual - Page 3322

No.	Fault display	Meaning/cause	Counteraction	2000	4000
284	*(Not used)*				
285	*(Not used)*				
286	*(Not used)*				
287	*(Not used)*				
288	*(Not used)*				
289	*(Not used)*				
290	*(Not used)*				
291	*(Not used)*				
292	*(Not used)*				
293	*(Not used)*				
294	*(Not used)*				
295	*(Not used)*				
296	*(Not used)*				
297	*(Not used)*				
298	*(Not used)*				
299	*(Not used)*				
300	*(Not used)*				
301	**TIMING CYLINDER A1**	Cylinder A1: –FPGA fault status = 2 –Time-of-flight t < 600 µs –Time-of-flight t > 1400 µs	Replace solenoid valve if this occurs frequently ➧ Engine documentation	✓	✓
302	**TIMING CYLINDER A2**	Cylinder A2: –FPGA fault status = 2 –Time-of-flight t < 600 µs –Time-of-flight t > 1400 µs	Replace solenoid valve if this occurs frequently ➧ Engine documentation	✓	✓
303	**TIMING CYLINDER A3**	Cylinder A3: –FPGA fault status = 2 –Time-of-flight t < 600 µs or –Time-of-flight t > 1400 µs	Replace solenoid valve if this occurs frequently ➧ Engine documentation	✓	✓
304	**TIMING CYLINDER A4**	Cylinder A4: –FPGA fault status = 2 –Time-of-flight t < 600 µs –Time-of-flight t > 1400 µs	Replace solenoid valve if this occurs frequently ➧ Engine documentation	✓	✓

Katolight Service - Master Repair Manual - Page 3323

No.	Fault display	Meaning/cause	Counteraction	2000	4000
305	TIMING CYLINDER A5	Cylinder A5: –FPGA fault status = 2 –Time-of-flight *t* < 600 µs –Time-of-flight *t* > 1400 µs	Replace solenoid valve if this occurs frequently ➧ Engine documentation	✓	✓
306	TIMING CYLINDER A6	Cylinder A6: –FPGA fault status = 2 –Time-of-flight *t* < 600 µs –Time-of-flight *t* > 1400 µs	Replace solenoid valve if this occurs frequently ➧ Engine documentation	✓	✓
307	TIMING CYLINDER A7	Cylinder A7: –FPGA fault status = 2 –Time-of-flight *t* < 600 µs –Time-of-flight *t* > 1400 µs	Replace solenoid valve if this occurs frequently ➧ Engine documentation	✓	✓
308	TIMING CYLINDER A8	Cylinder A8: –FPGA fault status = 2 –Time-of-flight *t* < 600 µs –Time-of-flight *t* > 1400 µs	Replace solenoid valve if this occurs frequently ➧ Engine documentation	✓	✓
309	TIMING CYLINDER A9	Cylinder A9: –FPGA fault status = 2 –Time-of-flight *t* < 600 µs –Time-of-flight *t* > 1400 µs	Replace solenoid valve if this occurs frequently ➧ Engine documentation	✓	✓
310	TIMING CYLINDER A10	Cylinder A10: –FPGA fault status = 2 –Time-of-flight *t* < 600 µs –Time-of-flight *t* > 1400 µs	Replace solenoid valve if this occurs frequently ➧ Engine documentation	✓	✓
311	TIMING CYLINDER B1	Cylinder B1: –FPGA fault status = 2 –Time-of-flight *t* < 600 µs –Time-of-flight *t* > 1400 µs	Replace solenoid valve if this occurs frequently ➧ Engine documentation	✓	✓
312	TIMING CYLINDER B2	Cylinder B2: –FPGA fault status = 2 –Time-of-flight *t* < 600 µs –Time-of-flight *t* > 1400 µs	Replace solenoid valve if this occurs frequently ➧ Engine documentation	✓	✓
313	TIMING CYLINDER B3	Cylinder B3: –FPGA fault status = 2 –Time-of-flight *t* < 600 µs –Time-of-flight *t* > 1400 µs	Replace solenoid valve if this occurs frequently ➧ Engine documentation	✓	✓
314	TIMING CYLINDER B4	Cylinder B4: –FPGA fault status = 2 –Time-of-flight *t* < 600 µs –Time-of-flight *t* > 1400 µs	Replace solenoid valve if this occurs frequently ➧ Engine documentation	✓	✓
315	TIMING CYLINDER B5	Cylinder B5: –FPGA fault status = 2 –Time-of-flight *t* < 600 µs –Time-of-flight *t* > 1400 µs	Replace solenoid valve if this occurs frequently ➧ Engine documentation	✓	✓

Katolight Service - Master Repair Manual - Page 3324

No.	Fault display	Meaning/cause	Counteraction	2000	4000
316	TIMING CYLINDER B6	Cylinder B6: –FPGA fault status = 2 –Time-of-flight t < 600 µs –Time-of-flight t > 1400 µs	Replace solenoid valve if this occurs frequently ➧ Engine documentation	✓	✓
317	TIMING CYLINDER B7	Cylinder B7: –FPGA fault status = 2 –Time-of-flight t < 600 µs –Time-of-flight t > 1400 µs	Replace solenoid valve if this occurs frequently ➧ Engine documentation	✓	✓
318	TIMING CYLINDER B8	Cylinder B8: –FPGA fault status = 2 –Time-of-flight t < 600 µs –Time-of-flight t > 1400 µs	Replace solenoid valve if this occurs frequently ➧ Engine documentation	✓	✓
319	TIMING CYLINDER B9	Cylinder B9: –FPGA fault status = 2 –Time-of-flight t < 600 µs –Time-of-flight t > 1400 µs	Replace solenoid valve if this occurs frequently ➧ Engine documentation	✓	✓
320	TIMING CYLINDER B10	Cylinder B10: –FPGA fault status = 2 –Time-of-flight t < 600 µs –Time-of-flight t > 1400 µs	Replace solenoid valve if this occurs frequently ➧ Engine documentation	✓	✓
321	WIRING CYLINDER A1	Cabling fault cylinder A1 → misfiring	SV short-circuit or +SV line shorted to electronic ground (Requirement: Engine block grounded) Replace solenoid valve or cable harness ➧ Engine documentation	✓	✓
322	WIRING CYLINDER A2	Cabling fault cylinder A2 → misfiring	SV short-circuit or +SV line shorted to electronic ground (Requirement: Engine block grounded) Replace solenoid valve or cable harness ➧ Engine documentation	✓	✓
323	WIRING CYLINDER A3	Cabling fault cylinder A3 → misfiring	SV short-circuit or +SV line shorted to electronic ground (Requirement: Engine block grounded) Replace solenoid valve or cable harness ➧ Engine documentation	✓	✓

Katolight Service - Master Repair Manual - Page 3325

No.	Fault display	Meaning/cause	Counteraction	2000	4000
324	**WIRING CYLINDER A4**	Cabling fault cylinder A4 → misfiring	SV short-circuit or +SV line shorted to electronic ground (Requirement: Engine block grounded) Replace solenoid valve or cable harness ➧ Engine documentation	✓	✓
325	**WIRING CYLINDER A5**	Cabling fault cylinder A5 → misfiring	SV short-circuit or +SV line shorted to electronic ground (Requirement: Engine block grounded) Replace solenoid valve or cable harness ➧ Engine documentation	✓	✓
326	**WIRING CYLINDER A6**	Cabling fault cylinder A6 → misfiring	SV short-circuit or +SV line shorted to electronic ground (Requirement: Engine block grounded) Replace solenoid valve or cable harness ➧ Engine documentation	✓	✓
327	**WIRING CYLINDER A7**	Cabling fault cylinder A7 → misfiring	SV short-circuit or +SV line shorted to electronic ground (Requirement: Engine block grounded) Replace solenoid valve or cable harness ➧ Engine documentation	✓	✓
328	**WIRING CYLINDER A8**	Cabling fault cylinder A8 → misfiring	SV short-circuit or +SV line shorted to electronic ground (Requirement: Engine block grounded) Replace solenoid valve or cable harness ➧ Engine documentation	✓	✓

Katolight Service - Master Repair Manual - Page 3326

No.	Fault display	Meaning/cause	Counteraction	2000	4000
329	**WIRING CYLINDER A9**	Cabling fault cylinder A9 → misfiring	SV short-circuit or +SV line shorted to electronic ground (Requirement: Engine block grounded) Replace solenoid valve or cable harness ➧ Engine documentation	✓	✓
330	**WIRING CYLINDER A10**	VCabling fault cylinder A10 → misfiring	SV short-circuit or +SV line shorted to electronic ground (Requirement: Engine block grounded) Replace solenoid valve or cable harness ➧ Engine documentation	✓	✓
331	**WIRING CYLINDER B1**	Cabling fault cylinder B1 → misfiring	SV short-circuit or +SV line shorted to electronic ground (Requirement: Engine block grounded) Replace solenoid valve or cable harness ➧ Engine documentation	✓	✓
332	**WIRING CYLINDER B2**	Cabling fault cylinder B2 → misfiring	SV short-circuit or +SV line shorted to electronic ground (Requirement: Engine block grounded) Replace solenoid valve or cable harness ➧ Engine documentation	✓	✓
333	**WIRING CYLINDER B3**	Cabling fault cylinder B3 → misfiring	SV short-circuit or +SV line shorted to electronic ground (Requirement: Engine block grounded) Replace solenoid valve or cable harness ➧ Engine documentation	✓	✓

Katolight Service - Master Repair Manual - Page 3327

No.	Fault display	Meaning/cause	Counteraction	2000	4000
334	WIRING CYLINDER B4	Cabling fault cylinder B4 → misfiring	SV short-circuit or +SV line shorted to electronic ground (Requirement: Engine block grounded) Replace solenoid valve or cable harness ➧ Engine documentation	✓	✓
335	WIRING CYLINDER B5	Cabling fault cylinder B5 → misfiring	SV short-circuit or +SV line shorted to electronic ground (Requirement: Engine block grounded) Replace solenoid valve or cable harness ➧ Engine documentation	✓	✓
336	WIRING CYLINDER B6	Cabling fault cylinder B6 → misfiring	SV short-circuit or +SV line shorted to electronic ground (Requirement: Engine block grounded) Replace solenoid valve or cable harness ➧ Engine documentation	✓	✓
337	WIRING CYLINDER B7	Cabling fault cylinder B7 → misfiring	SV short-circuit or +SV line shorted to electronic ground (Requirement: Engine block grounded) Replace solenoid valve or cable harness ➧ Engine documentation	✓	✓
338	WIRING CYLINDER B8	Cabling fault cylinder B8 → misfiring	SV short-circuit or +SV line shorted to electronic ground (Requirement: Engine block grounded) Replace solenoid valve or cable harness ➧ Engine documentation	✓	✓

Katolight Service - Master Repair Manual - Page 3328

No.	Fault display	Meaning/cause	Counteraction	2000	4000
339	WIRING CYLINDER B9	Cabling fault cylinder B9 → misfiring	SV short-circuit or +SV line shorted to electronic ground (Requirement: Engine block grounded) Replace solenoid valve or cable harness ➧ Engine documentation	✓	✓
340	WIRING CYLINDER B10	Cabling fault cylinder B10 → misfiring	SV short-circuit or +SV line shorted to electronic ground (Requirement: Engine block grounded) Replace solenoid valve or cable harness ➧ Engine documentation	✓	✓
341	OPEN_LOAD CYL. A1	Fault (interruption) in cabling of cylinder A1 → misfiring	Check cabling and solenoid valve for interruption Replace solenoid valve or cable harness ➧ Engine documentation	✓	✓
342	OPEN_LOAD CYL. A2	Fault (interruption) in cabling of cylinder A2 → misfiring	Check cabling and solenoid valve for interruption Replace solenoid valve or cable harness ➧ Engine documentation	✓	✓
343	OPEN_LOAD CYL. A3	Fault (interruption) in cabling of cylinder A3 → misfiring	Check cabling and solenoid valve for interruption Replace solenoid valve or cable harness ➧ Engine documentation	✓	✓
344	OPEN_LOAD CYL. A4	Fault (interruption) in cabling of cylinder A4 → misfiring	Check cabling and solenoid valve for interruption Replace solenoid valve or cable harness ➧ Engine documentation	✓	✓
345	OPEN_LOAD CYL. A5	Fault (interruption) in cabling of cylinder A5 → misfiring	Check cabling and solenoid valve for interruption Replace solenoid valve or cable harness ➧ Engine documentation	✓	✓

Katolight Service - Master Repair Manual - Page 3329

No.	Fault display	Meaning/cause	Counteraction	2000	4000
346	OPEN_LOAD CYL. A6	Fault (interruption) in cabling of cylinder A6 → misfiring	Check cabling and solenoid valve for interruption Replace solenoid valve or cable harness ➧ Engine documentation	✓	✓
347	OPEN_LOAD CYL. A7	Fault (interruption) in cabling of cylinder A7 → misfiring	Check cabling and solenoid valve for interruption Replace solenoid valve or cable harness ➧ Engine documentation	✓	✓
348	OPEN_LOAD CYL. A8	Fault (interruption) in cabling of cylinder A8 → misfiring	Check cabling and solenoid valve for interruption Replace solenoid valve or cable harness ➧ Engine documentation	✓	✓
349	OPEN_LOAD CYL. A9	Fault (interruption) in cabling of cylinder A9 → misfiring	Check cabling and solenoid valve for interruption Replace solenoid valve or cable harness ➧ Engine documentation	✓	✓
350	OPEN_LOAD CYL. A10	Fault (interruption) in cabling of cylinder A10 → misfiring	Check cabling and solenoid valve for interruption Replace solenoid valve or cable harness ➧ Engine documentation	✓	✓
351	OPEN_LOAD CYL. B1	Fault (interruption) in cabling of cylinder B1 → misfiring	Check cabling and solenoid valve for interruption Replace solenoid valve or cable harness ➧ Engine documentation	✓	✓
352	OPEN_LOAD CYL. B2	Fault (interruption) in cabling of cylinder B2 → misfiring	Check cabling and solenoid valve for interruption Replace solenoid valve or cable harness ➧ Engine documentation	✓	✓

Katolight Service - Master Repair Manual - Page 3330

No.	Fault display	Meaning/cause	Counteraction	2000	4000
353	OPEN_LOAD CYL. B3	Fault (interruption) in cabling of cylinder B3 → misfiring	Check cabling and solenoid valve for interruption Replace solenoid valve or cable harness ◗ Engine documentation	✓	✓
354	OPEN_LOAD CYL. B4	Fault (interruption) in cabling of cylinder B4 → misfiring	Check cabling and solenoid valve for interruption Replace solenoid valve or cable harness ◗ Engine documentation	✓	✓
355	OPEN_LOAD CYL. B5	Fault (interruption) in cabling of cylinder B5 → misfiring	Check cabling and solenoid valve for interruption Replace solenoid valve or cable harness ◗ Engine documentation	✓	✓
356	OPEN_LOAD CYL. B6	Fault (interruption) in cabling of cylinder B6 → misfiring	Check cabling and solenoid valve for interruption Replace solenoid valve or cable harness ◗ Engine documentation	✓	✓
357	OPEN_LOAD CYL. B7	Fault (interruption) in cabling of cylinder B7 → misfiring	Check cabling and solenoid valve for interruption Replace solenoid valve or cable harness ◗ Engine documentation	✓	✓
358	OPEN_LOAD CYL. B8	Fault (interruption) in cabling of cylinder B8 → misfiring	Check cabling and solenoid valve for interruption Replace solenoid valve or cable harness ◗ Engine documentation	✓	✓
359	OPEN_LOAD CYL. B9	Fault (interruption) in cabling of cylinder B9 → misfiring	Check cabling and solenoid valve for interruption Replace solenoid valve or cable harness ◗ Engine documentation	✓	✓

Katolight Service - Master Repair Manual - Page 3331

No.	Fault display	Meaning/cause	Counteraction	2000	4000
360	OPEN_LOAD CYL. B10	Fault (interruption) in cabling of cylinder B10 → misfiring	Check cabling and solenoid valve for interruption Replace solenoid valve or cable harness ➧ Engine documentation	✓	✓
361	POWER STAGE FAIL 1	Internal electronics failure (if fault permanently applied) → possible quantity limitation	PA circuit faulty or free-wheeling transistor short-circuit Replace Engine Control Unit ECU See ID: T-E-G24-0001 Page 40	✓	✓
362	POWER STAGE FAIL 2	Internal electronics failure (if fault permanently applied) → possible quantity limitation	PA circuit faulty or free-wheeling transistor short-circuit Replace Engine Control Unit ECU See ID: T-E-G24-0001 Page 40	✓	✓
363	STOP POWER STAGE 1	Internal electronics failure (FPGA messages 4,5,9,11,12) → engine stop	1. SV line shorted to electronic ground by resistance less than 1 Ohm (engine block applied to electronic ground) Replace cable harness ➧ Engine documentation 2. Electronics faulty Replace Engine Control Unit ECU See ID: T-E-G24-0001 Page 40	✓	✓
364	STOP POWER STAGE 2	Internal electronics failure (FPGA messages 4,5,9,11,12) → engine stop	1. SV line shorted to electronic ground by resistance less than 1 Ohm (engine block applied to electronic ground) Replace cable harness ➧ Engine documentation 2. Electronics faulty Replace Engine Control Unit ECU See ID: T-E-G24-0001 Page 40	✓	✓

Katolight Service - Master Repair Manual - Page 3332

No.	Fault display	Meaning/cause	Counteraction	2000	4000
365	**STOP MV-WIRING**	Solenoid valve wiring fault → engine stop	SV line shorted to electronic ground (engine block applied to electronic ground) Replace cable harness ➧ Engine documentation	✓	✓
366	*(Not used)*				
367	*(Not used)*				
368	*(Not used)*				
369	*(Not used)*				
370	*(Not used)*				
371	*(Not used)*				
372	*(Not used)*				
373	*(Not used)*				
374	*(Not used)*				
375	*(Not used)*				
376	*(Not used)*				
377	*(Not used)*				
378	*(Not used)*				
379	*(Not used)*				
380	*(Not used)*				
381	**TRAN.OUT1 PLANT DEF**	TAA1 faulty	1. Wire breakage or short-circuit Replace cable harness ➧ Engine documentation 2. Electronics faulty Replace Engine Control Unit ECU See ID: T-E-G24-0001 Page 40	✓	✓

Katolight Service - Master Repair Manual - Page 3333

No.	Fault display	Meaning/cause	Counteraction	2000	4000
382	TRAN.OUT2 PLANT DEF	TAA2 faulty	1. Wire breakage or short-circuit Replace cable harness ➧ Engine documentation 2. Electronics faulty Replace Engine Control Unit ECU See ID: T-E-G24-0001 Page 40	✓	✓
383	TRAN.OUT3 PLANT DEF	TAA3 faulty	1. Wire breakage or short-circuit Replace cable harness ➧ Engine documentation 2. Electronics faulty Replace Engine Control Unit ECU See ID: T-E-G24-0001 Page 40	✓	✓
384	TRAN.OUT4 PLANT DEF	TAA4 faulty	1. Wire breakage or short-circuit Replace cable harness ➧ Engine documentation 2. Electronics faulty Replace Engine Control Unit ECU See ID: T-E-G24-0001 Page 40	✓	✓
385	TRAN.OUT5 PLANT DEF	TAA5 faulty	1. Wire breakage or short-circuit Replace cable harness ➧ Engine documentation 2. Electronics faulty Replace Engine Control Unit ECU See ID: T-E-G24-0001 Page 40	✓	✓

No.	Fault display	Meaning/cause	Counteraction	2000	4000
386	TRAN.OUT6 PLANT DEF	TAA6 faulty	1. Wire breakage or short-circuit Replace cable harness ➧ Engine documentation 2. Electronics faulty Replace Engine Control Unit ECU See ID: T-E-G24-0001 Page 40	✓	✓
387	*(Not used)*				
388	*(Not used)*				
389	*(Not used)*				
390	*(Not used)*				
391	*(Not used)*				
392	*(Not used)*				
393	*(Not used)*				
394	*(Not used)*				
395	*(Not used)*				
396	*(Not used)*				
397	*(Not used)*				
398	*(Not used)*				
399	*(Not used)*				

Katolight Service - Master Repair Manual - Page 3335

3.4.2.1 Replacing Engine Control Unit ECU

ID no.: T-E-G24-0001

Duration: 15 min Qualification: E1

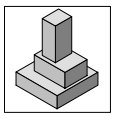

System components/devices

	OK ?
• Engine Control Unit ECU on the engine	❒
• New Engine Control Unit ECU	❒
• Suitably programmed memory modules as necessary (see below)	❒

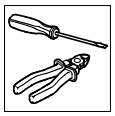

Equipment

	OK ?
• A set of screwdrivers	❒
• A set of Allen wrenches	❒
• Connector pliers	❒



Additional safety notes

	OK ?
• There are two memory modules in Engine Control Unit ECU. One contains a data record which is only valid for the engine for which this particular ECU is used. The other contains data about the system (so-called plant data). It is absolutely vital that these memory modules be transferred from the old ECU to the new ECU. The engine is not properly controlled if these instructions are ignored and an incorrect data record is used.	❒
• The operating voltage must be switched off.	❒



List of activities

		ID no.	OK ?
1.	Switching off the operating voltage.	---	❒
2.	Removing the housing of Engine Control Unit ECU from the engine.	A-E-G24-0001 Page 42	❒
3.	Opening the cover on Engine Control Unit ECU.	A-P-ECU-0006 Page 43	❒
4.	Transferring memory modules in Engine Control Unit ECU.	A-E-ECU-0011 Page 44	❒
5.	Fitting the cover on Engine Control Unit ECU.	A-P-ECU-0007 Page 46	❒
6.	Mounting the housing of Engine Control Unit ECU on the engine.	A-E-G24-0002 Page 47	❒
7.	Performing function testing.	---	❒



Additional information

OK ?

- Inform MTU customer service if a fault message appears indicating an invalid data record after replacing the ECU. A valid data record must be programmed in this case (specialist personnel!) or suitably programmed modules ordered and inserted.



CAUTION

Destruction by electrostatic charging

(C)MOS components and assemblies equipped with (C)MOS components can be destroyed by electrostatic charging. Therefore:

- Personnel, tools and the work surfaces must be electrostatically discharged by contact with grounded metal parts prior to contact with electronic components or assemblies.
- Avoid touching electronic components or assemblies with non-conductive materials.
- Never change components or assemblies when live.

3.4.2.1.1 Removing the housing of Engine Control Unit ECU from the engine

ID no.: A-E-G24-0001

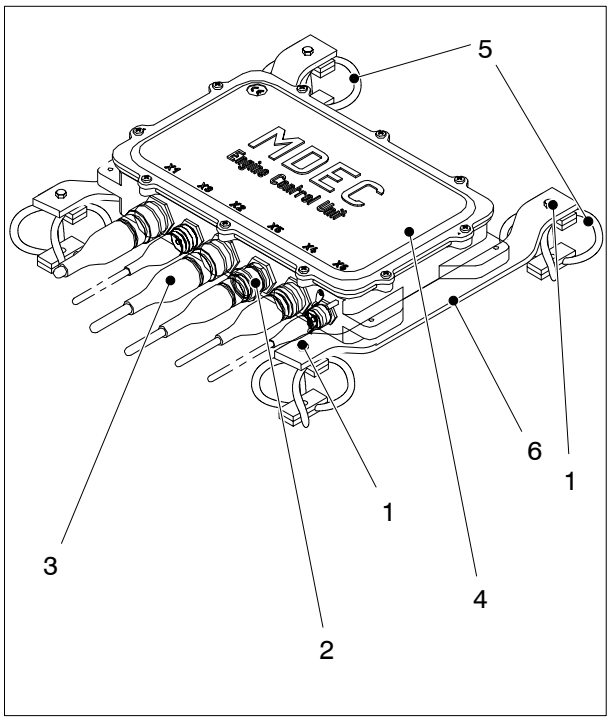

Fig. 55 : Engine Control Unit ECU 4 on the engine

Engine Control Unit ECU 4 (55/4) is located directly on the engine. It is screwed on by means of various adapter brackets (55/6) which are connected to the engine via cable shock absorbers (55/5).

Note: The fixing method and the materials used depend on the engine concerned and its application. Fig. 55 is merely an example.

Proceed as follows to remove Engine Control Unit ECU:

1. Undo the connectors on the side (55/3) one after the other:
2. Turn the bayonet nut (55/2) of the connector counterclockwise.
3. Pull the connector off the housing.
4. Remove all connectors from Engine Control Unit ECU 4/S in the same way.

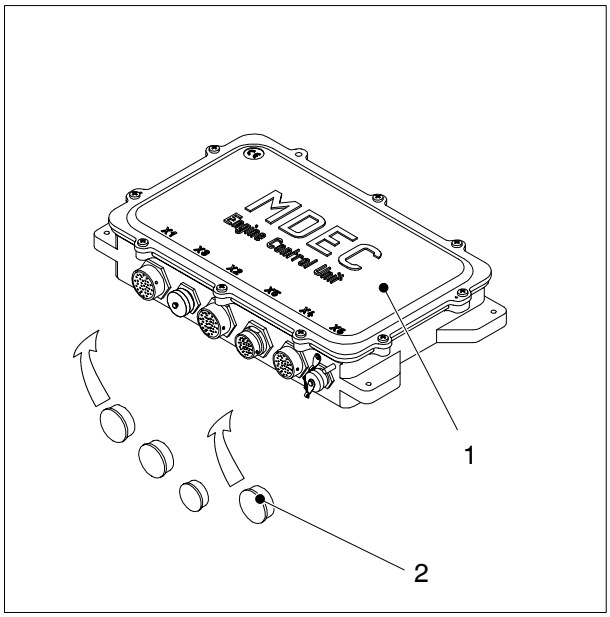

Fig. 56 : Removing Engine Control Unit ECU 4

5. Unscrew and remove the four hex-head bolts (55/1) which connect the housing of Engine Control Unit ECU 4 (55/4) to the adapter brackets (55/6) (the hex-head bolts are screwed into a thread on the cable shock absorbers).
6. Now remove the housing of Engine Control Unit ECU 4 (56/1) from the engine.
7. Close off the connector sockets using (plastic) caps (56/2) whenever the housing of Engine Control Unit ECU 4 is not mounted on the engine and no plugs are connected in order to protect the connector sockets from dirt.

Katolight Service - Master Repair Manual - Page 3338

3.4.2.1.2 Opening the cover on Engine Control Unit ECU

ID no.: A-E-ECU-0002

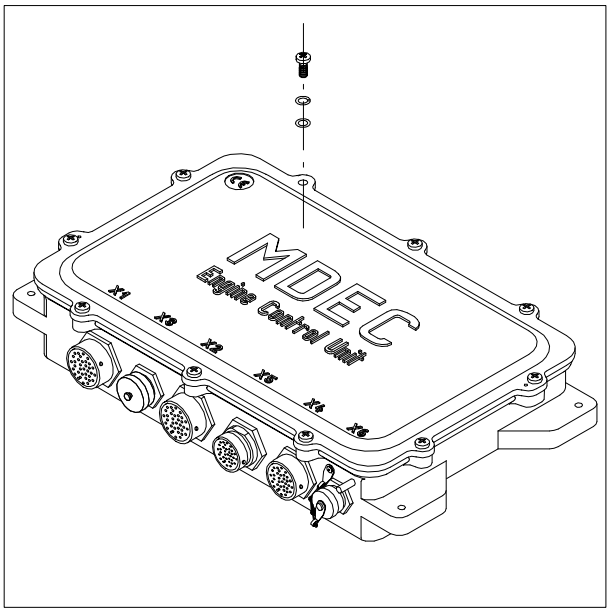

Fig. 57 : Opening the cover

1. Place Engine Control Unit ECU such that the sockets are facing towards you.
2. The cover is secured to the housing of Engine Control Unit ECU by ten Phillips screws, undo these screws one after the other using a Phillips screwdriver.
3. There is a plain washer and a spring washer under each screw; ensure that these parts are not lost or fall into the housing during removal.

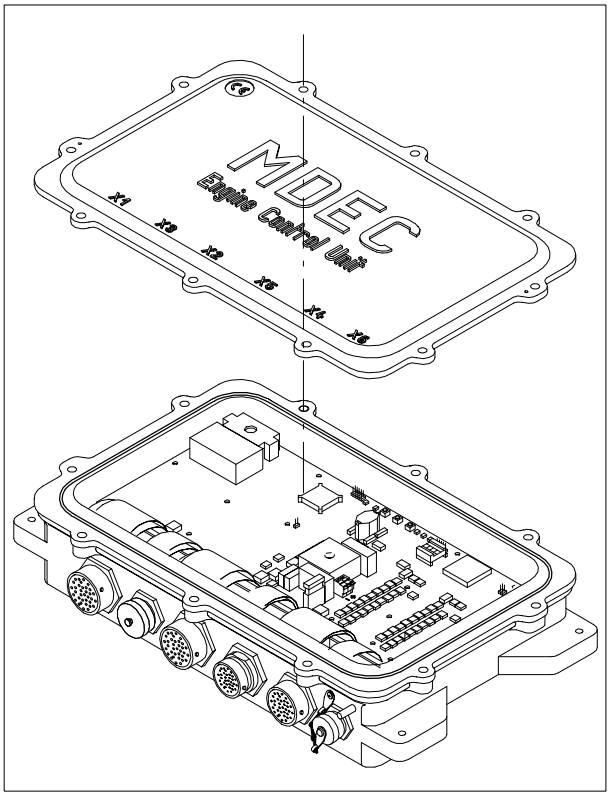

Fig. 58 : Lifting off the cover

4. Lift off the cover; take care not to damage the seal (sticking to the cover etc.).

Katolight Service - Master Repair Manual - Page 3339

3.4.2.1.3 Transferring memory modules in Engine Control Unit ECU

ID no.: A-E-ECU-0011

CAUTION

Danger of engine damage!

The data stored in these memory modules always applies to a specific engine (*not a type of engine,* but one *specific* engine having its own unique engine no.).

In extreme cases, mixing up the data modules may incur engine damage, the engine is not controlled properly in any case when an incorrect data module is inserted.

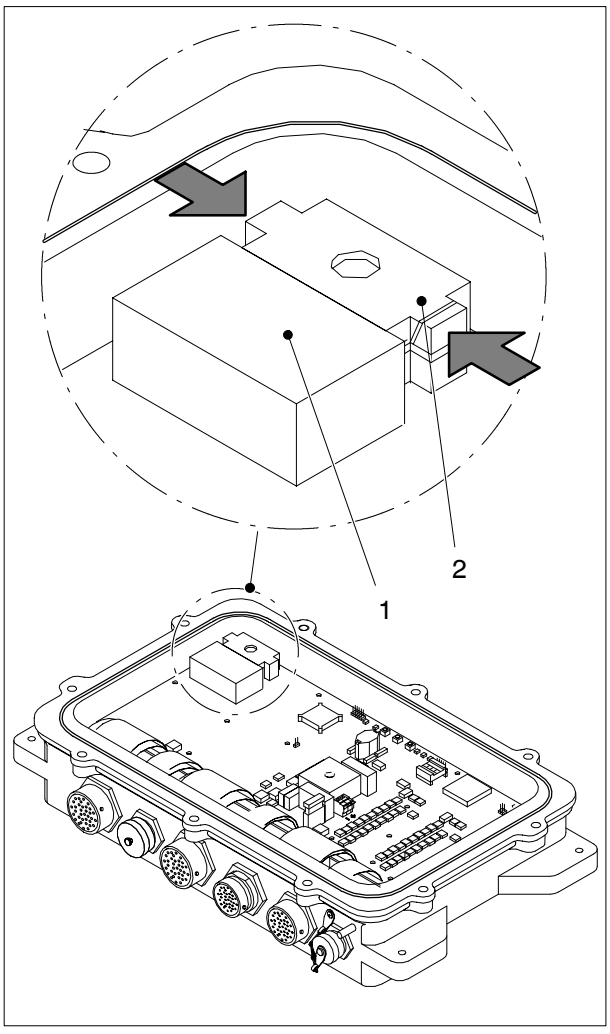

Fig. 59 : Data modules in Engine Control Unit ECU

First remove the two data modules (engine data and program memory EDM, 59/1 and interface data IDM 59/2) from the old ECU.
Proceed as follows:

1. Take hold of data module MEM 6-01 (59/1) with two fingers and pull it up off printed circuit board ECB 4-01.
2. Press the two catches on the snap-in clips of data module MEM 7 (59/2) at the back together in the direction indicated by the arrow using thumb and forefinger.
3. Pull the data module up out of its socket.
4. Remove the two (unprogrammed!) data modules from the new ECU in the same way.
5. Install the two data modules from the old ECU in the new ECU; proceed in accordance with steps 6. through 8.

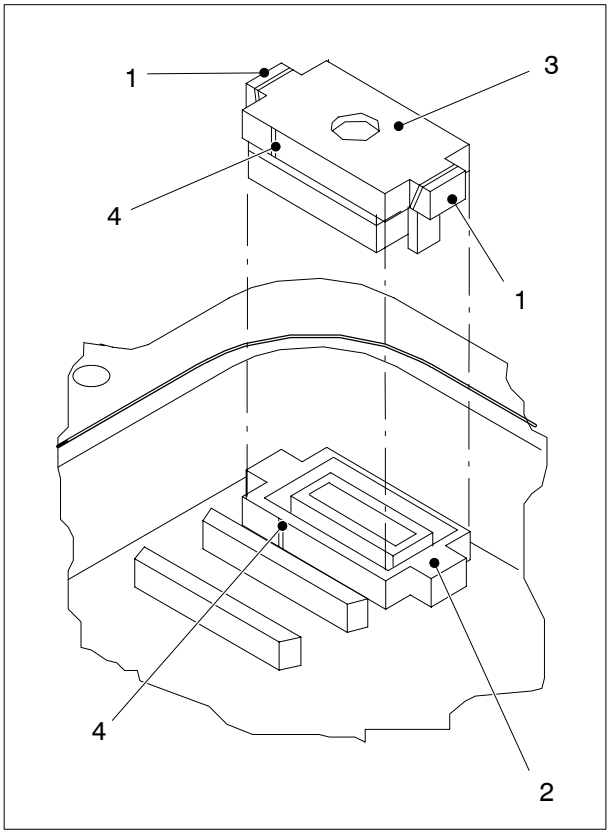

Fig. 60 : Inserting Interface Data Module IDM (MEM 7)

CAUTION

Check polarity!
There is a line (60/4) marking pin 1 on the Interface Data Module IDM and its socket; these two lines must match up.

6. Press the data module (60/3) at the back into the socket on printed circuit board ECB 4-01 (60/2) until the snap-in clips (60/1) engage.
7. Place the data module MEM 6-01 (61/1) at the front on the two connector strips (61/2) on printed circuit board ECB 4-01.

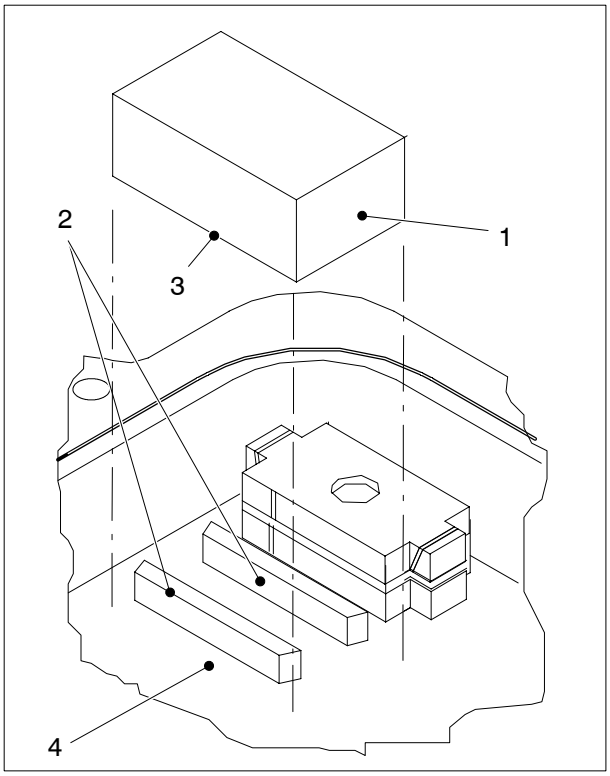

Fig. 61 : Inserting engine data and program memory module EDM (MEM 6-01)

CAUTION

Check polarity!
Data module MEM 6-01 (61/1) cannot be pressed into the connector strips if it is incorrectly positioned. Turn it through 180° in this case.
Forcing the module into the connector strips will destroy it.

8. Carefully press data module MEM 6-01 (61/1) into the connector strips as far as it will go.

3.4.2.1.4 Fitting the cover on Engine Control Unit ECU

ID no.: A-E-ECU-0006

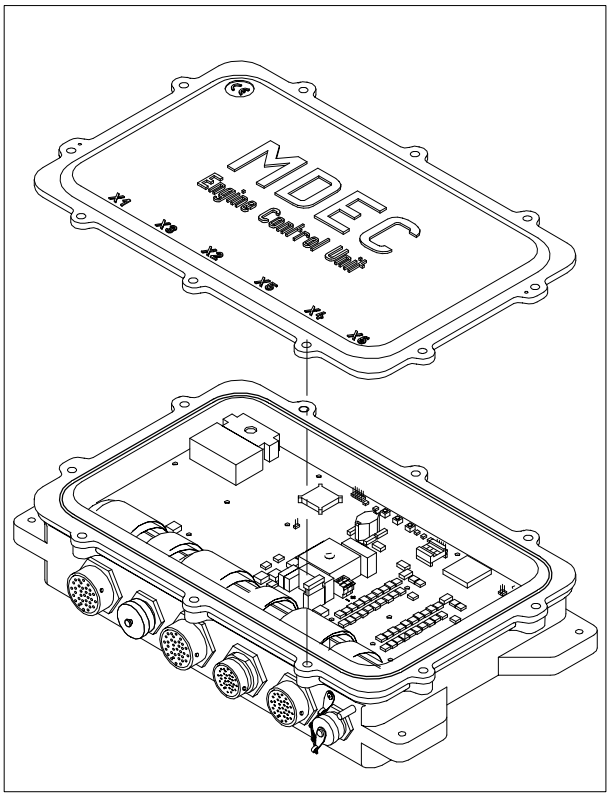

Fig. 62 : Fitting the cover

1. Check that the round seal is not damaged, otherwise replace it.
2. Ensure that the seal is properly seated in the groove in the housing all the way round.
3. Fit the cover on the housing of Engine Control Unit ECU ensuring that it is the right way round; place the cover on the housing such that the connector designations face the side on which the connectors are actually located.

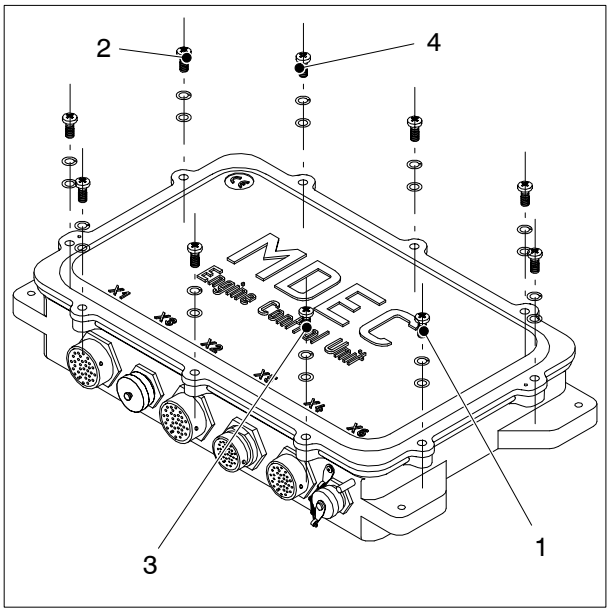

Fig. 63 : Tightening down the cover

4. Screw in the ten screws together with their respective plain washers and spring washers and tighten by hand.
5. Tighten up diagonally opposed screws consecutively (see example in fig. 63, first tighten screw (63/1), then screw (63/2) before continuing with screw (63/3) followed by screw (63/4), etc.).

3.4.2.1.5 Mounting the housing of Engine Control Unit ECU on the engine

ID no.: A-E-G24-0002

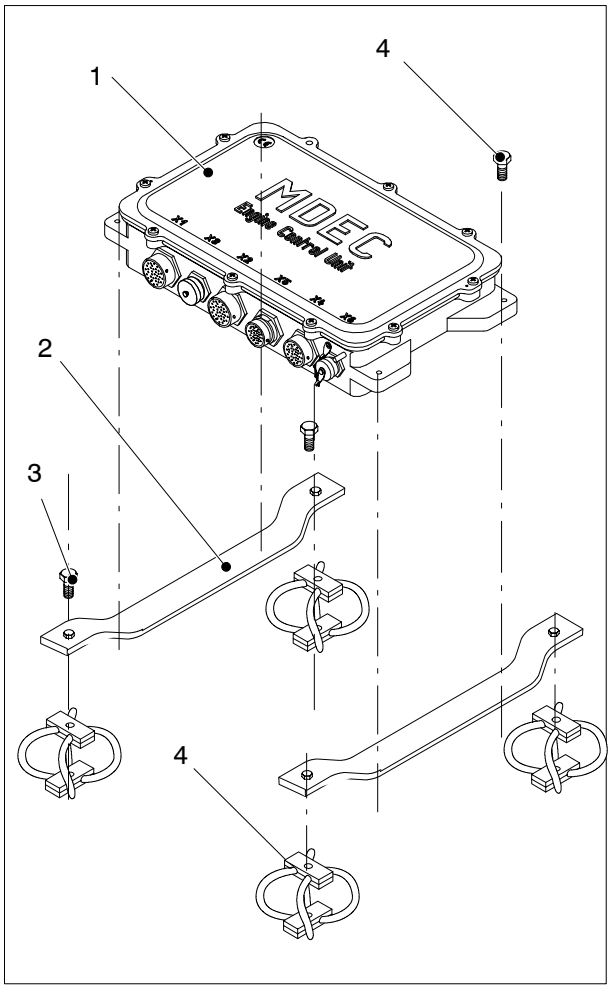

Fig. 64 : Engine Control Unit ECU 4 dismounted

1. If the four hex-head bolts (64/3) have been undone, screw them through the appropriate adapter brackets (64/2) by hand into the thread on the cable shock absorbers (64/4).

Note: The fixing method and the materials used depend on the engine concerned and its application. Fig. 64 is merely an example.

2. Tighten all four bolts with a suitable open-end wrench.
3. Place the Engine Control Unit (64/1) with the adapter brackets (64/2) on the cable shock absorbers (64/4).
4. Insert the four hex-head bolts (64/4) through the bores in the ECU and tighten them in the threads in the adapter brackets (64/2) by hand.
5. Tighten all four bolts using a suitable open-end wrench.

Katolight Service - Master Repair Manual - Page 3343

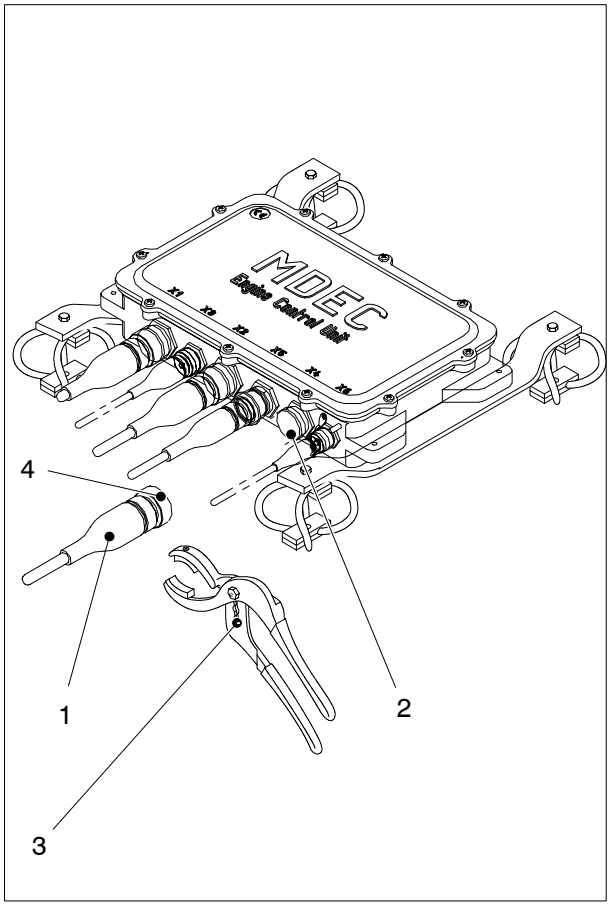

Fig. 65 : Engine Control Unit ECU 4 on the engine

6. Fit the first connector (65/1) of a cable harness on the corresponding connector socket (65/2) on Engine Control Unit ECU 4.
7. Turn the bayonet union nut (65/4) clockwise using connector pliers (65/3) until it locks into place.

CAUTION

Do not tighten by hand!
Tightening bayonet union nuts by hand is inadequate. There is a risk of the lock not engaging properly and the connector coming loose during engine operation. For this reason, **always use connector pliers** to turn the union nuts!

Katolight Service - Master Repair Manual - Page 3344

3.4.2.2 Using the MDEC simulator

ID no.: T-E-G24-0002

Duration: 60 min Qualification: E1

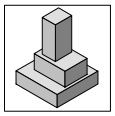

System components/devices **OK ?**

- Engine Control Unit ECU on the engine ❒
- MDEC simulator ❒



Additional safety notes **OK ?**

- The engine must never be started when the simulator is connected. ❒
- The operating voltage must be switched off to connect the simulator. ❒



List of activities **ID no.** **OK ?**

1. Switch off the voltage. --- ❒
2. Disconnect connector X2 of the cable harness on the ECU. --- ❒
3. Connect the MDEC simulator connector to socket X2 on the ECU. --- ❒
4. Switch on the operating voltage. --- ❒
5. Various operating states can be simulated by adjusting the values set on the simulator. --- ❒

   This allows you to check that the system detects these operating states correctly and responds appropriately (fault code output on PIM A 511, emergency stop by switching off the ECU operating voltage, etc.).

The ECU channels are assigned as follows:

Sensor	Signal	ECU channel	BR 2000	BR 4000
B1	Camshaft speed	NW1	✓	✓
B5	Lube oil pressure	DE5	✓	✓
B6	Coolant temperature	TE1	✓	✓
B7	Lube oil temperature	TE7	✓	✓
B9	Charge air temperature	TE2	✓	✓
B10	Charge air pressure	DE7	✓	✓
B13	Crankshaft speed	KW1	✓	✓
B26	Intercooler coolant temperature	TE6		✓
B34	Fuel pressure low-pressure side	DE3		✓

Sensor	Signal	ECU channel	BR 2000	BR 4000
F57	Intercooler coolant level	NSE1		✓
B33	Fuel temperature high-pressure side	TE3	✓	✓
B48	Fuel pressure high-pressure side	DEH		✓
F33	Engine coolant level	NSE3	✓	✓

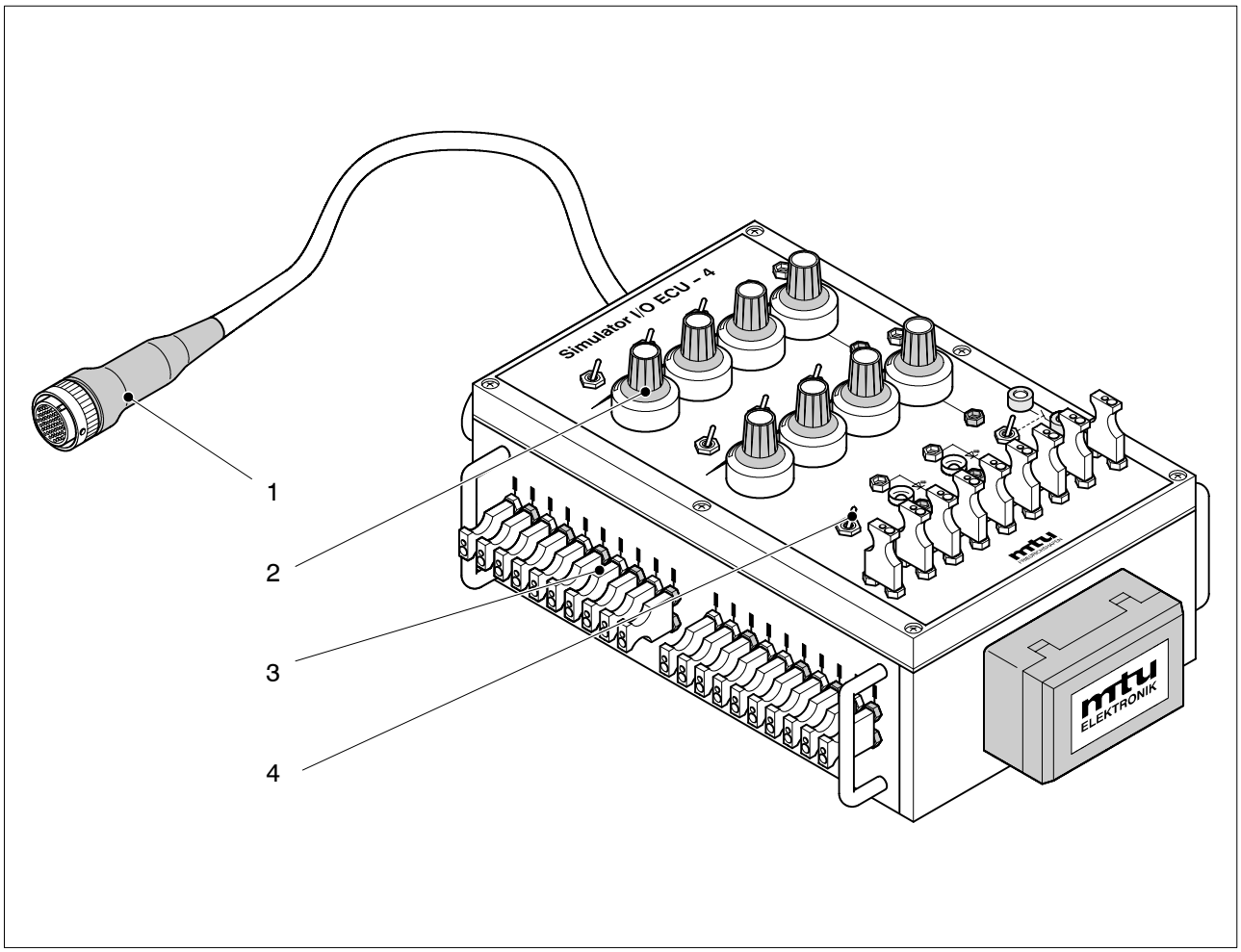

Fig. 66 : MDEC simulator

1 Connector X2
2 Potentiometer for setting analog values
3 Jumper plugs to simulate line interruption and for tapping signals (e.g. for purposes of testing)
4 Toggle switch

3.5 Maintenance

3.5.1 Maintenance overview

Periodic maintenance work on the Engine Control System

Column 2 in table 1 lists the intervals for routine maintenance work.

The maintenance intervals are adapted to the engine maintenance system.

Maintenance of electronic components by **operating personnel** (operators and plant personnel) is restricted to maintenance echelons W1 to W3. Refer to Part E of the engine documentation for details of the intervals (depending on operating hours or time).

Order	Inter-val	Task designation	Quali-ficat.	Dur./ min	Task ID	Page	Additional information/remarks
1	W1	Visual inspection, mechanical testing and cleaning	E1	20	T-M-G24-0003	52	Repair any faulty devices

Tab. 1 : Maintenance table

Note: See fig. 51 for details of structure and navigation in this chapter.

Katolight Service - Master Repair Manual - Page 3347

3.5.2 Visual inspection, mechanical testing and cleaning

ID no.: T-M-G24-0003

Duration: 20 min Qualification: E1

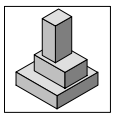

System components/devices

OK ?

- Engine Control Unit ❒
- Peripheral Interface Module PIM A 511 ❒
- Display DIS (option) ❒
- Further Peripheral Interface Modules PIM A 51x (option) ❒
- Wiring ❒

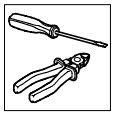

Equipment

OK ?

- Lint-free cleaning cloths (e.g. soft paper towels) ❒
- Cleaning agent for synthetic surfaces (non-corrosive), non-abrasive, solvent-free and grease-dissolving ❒



Pre-requisites

OK ?

- Overall system switched off ❒



Additional information

OK ?

- Be careful not to damage cabling when cleaning. ❒
- Reconnect cables disconnected for purposes of testing or cleaning properly. ❒



List of activities

ID no. **OK ?**

This sequence is recommended.

1. Cleaning device(s) externally if dirty. A-N-NNN-0016 Page 53 ❒
2. Checking device(s) externally. A-N-NNN-0017 Page 53 ❒

3.5.2.1 Cleaning device(s) externally

ID no.: A-N-NNN-0016

1. Clean all listed devices with the recommended expedients.
2. Renew illegible identification and inscriptions on all listed devices.

3.5.2.2 Checking device(s) externally

ID no.: A-N-NNN-0017

1. Check all listed devices externally for dirt.
2. Check all listed devices externally for visible mechanical damage.
3. Check the following:
   - No signs of moisture ingress in the housing
4. Check firm seating of all installed devices, tighten screws as necessary etc.
5. Check firm seating of connectors, cable glands, cable terminals etc. on all installed devices, engage properly or secure as necessary.

Katolight Service - Master Repair Manual - Page 3349

3.6 Structure of Engine Control Unit ECU 4

3.6.1 External structure

Engine Control Unit ECU 4 is enclosed in a diecast housing with a screw-fitted cover.

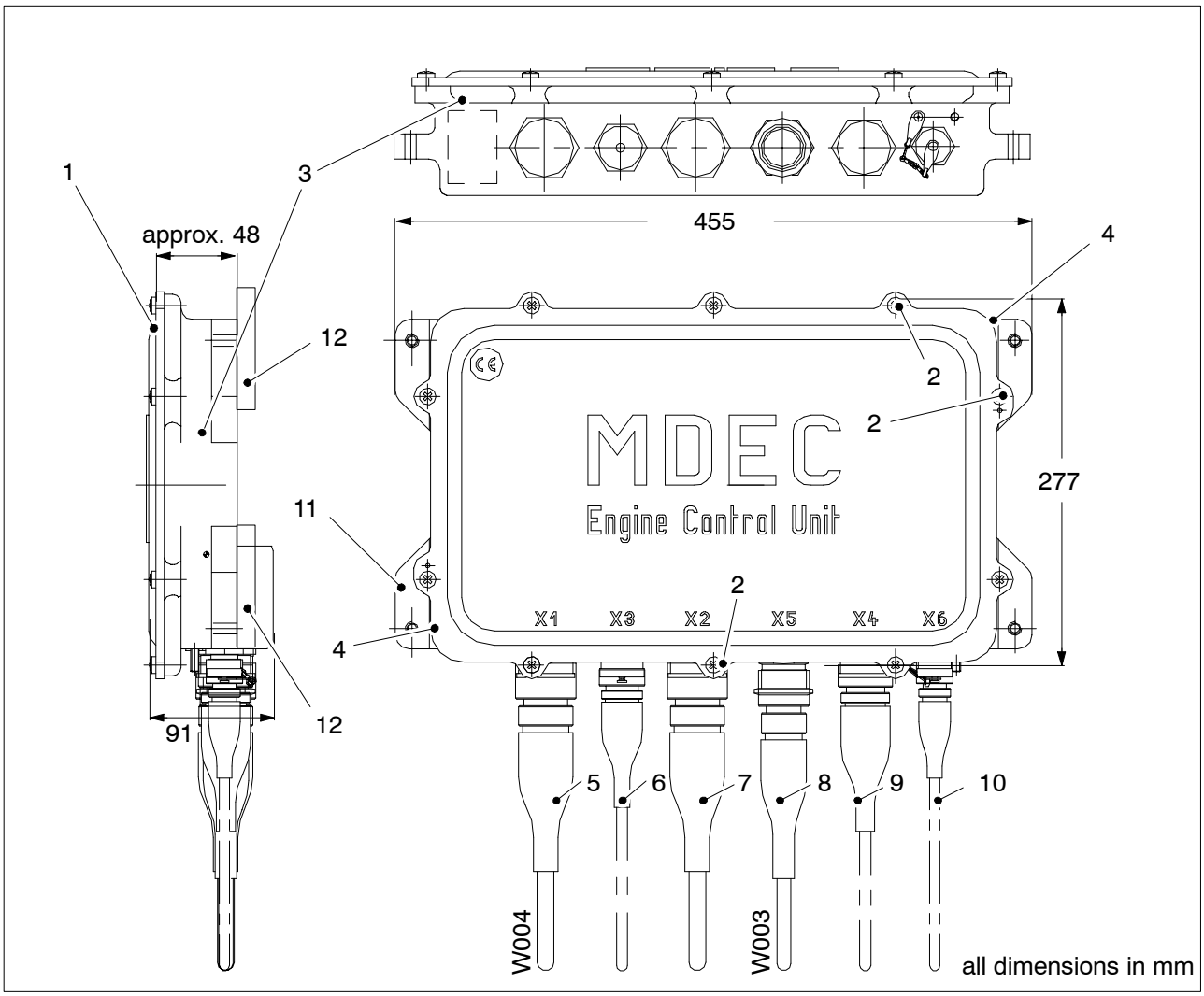

Fig. 67 : Mechanical structure

1 Cover
2 Cover screws
3 Housing
4 Seals
5 Plant connection plug
6 Cable harness connection plug
7 Extended sensor scope connection plug
8 Power supply (plant) connection plug
9 Cable harness connection plug
10 Dialog unit connection plug
11 Mounting lugs
12 Mounting plates

Four mounting lugs are used to secure Engine Control Unit ECU on the engine mounting plate. The cover is attached to the housing by means of 10 Phillips screws.

The housing is sealed by means of a round cord between the cover and the bottom part of the housing.

The connections for the plant, power supply, dialog unit and the cable harnesses are written on the housing cover. Pre-cut system cables and cable harnesses are connected to these connectors (X1 ... X6, see table below).

Electrical connections are established by means of bayonet connectors. A dust cap protects connector X6 which is not used when the engine is operational.

Dialog device connector X6 is only used for temporary connection of the dialog unit for purposes of servicing.

Precut cable harnesses equipped with connectors are used to connect engine sensors and actuators. The connectors are coded using different inserts to preclude misconnection. Connections of lines which are not in use are insulated.

Connection	**Meaning**
Connector X1 System cable W003	Plant connection (system cable to plant)
Connector X2 Cable harness W2	Connection for engine side I cable harness for sensors/actuators
Connector X3 Cable W3	Connection for engine side II cable harness for sensors/actuators
Connector X4 Cable harness W4	Connection for solenoid valve cable harness; the number of solenoid valves provided depends on the number of engine cylinders
Connector X5 System cable W005	Power supply connection (system cable to plant)
Connector X6 Dialog cable	Connection for dialog unit

Katolight Service - Master Repair Manual - Page 3351

3.6.2 Internal structure

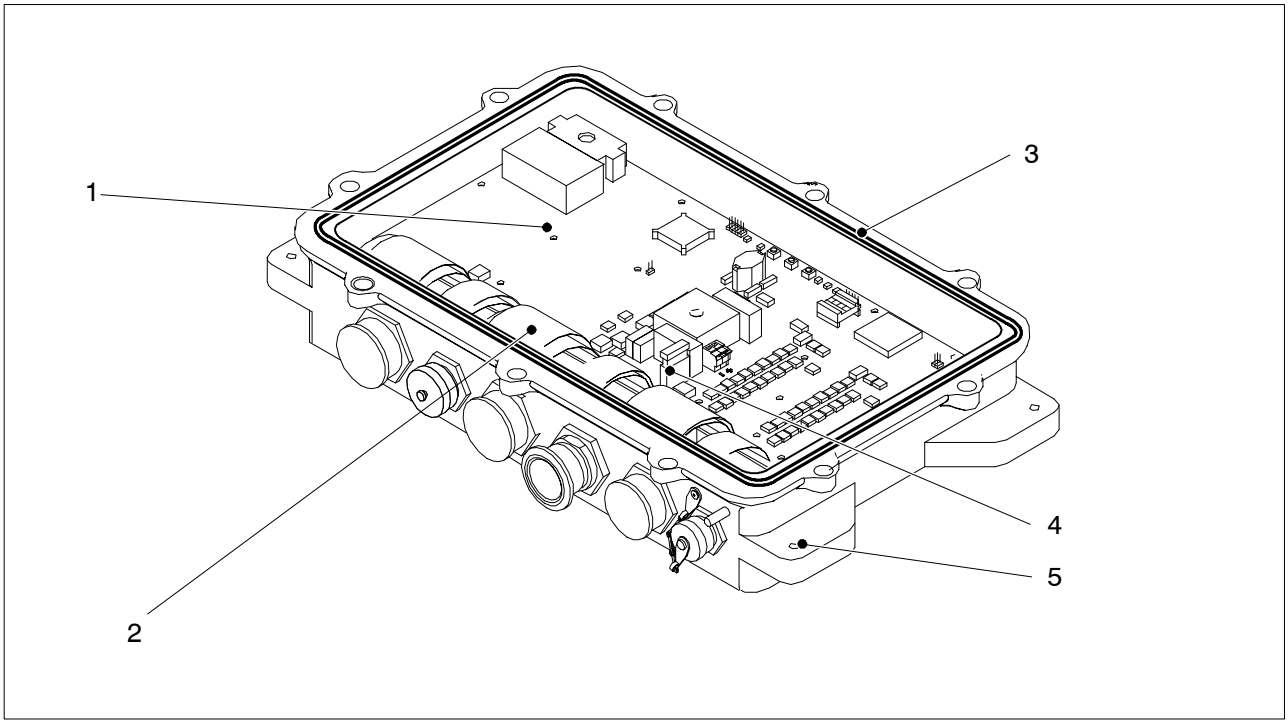

Fig. 68 : Internal structure of Engine Control Unit ECU (cover removed)

1 Printed circuit board ECB 4-01
2 Connecting cable
3 Round cord seal
4 Flat fuse
5 Housing

Printed circuit board ECB 4-01 inside the housing incorporates all electronic components (with the exception of the smoothing capacitor).

The replacable flat fuse (30 A) protects the power supply of the entire Engine Control Unit ECU 4.

Engine Control Unit ECU has no internal wiring with the exception of the capacitor connection in order to optimize operational reliability and simplify maintenance and repair.

Katolight Service - Master Repair Manual - Page 3352

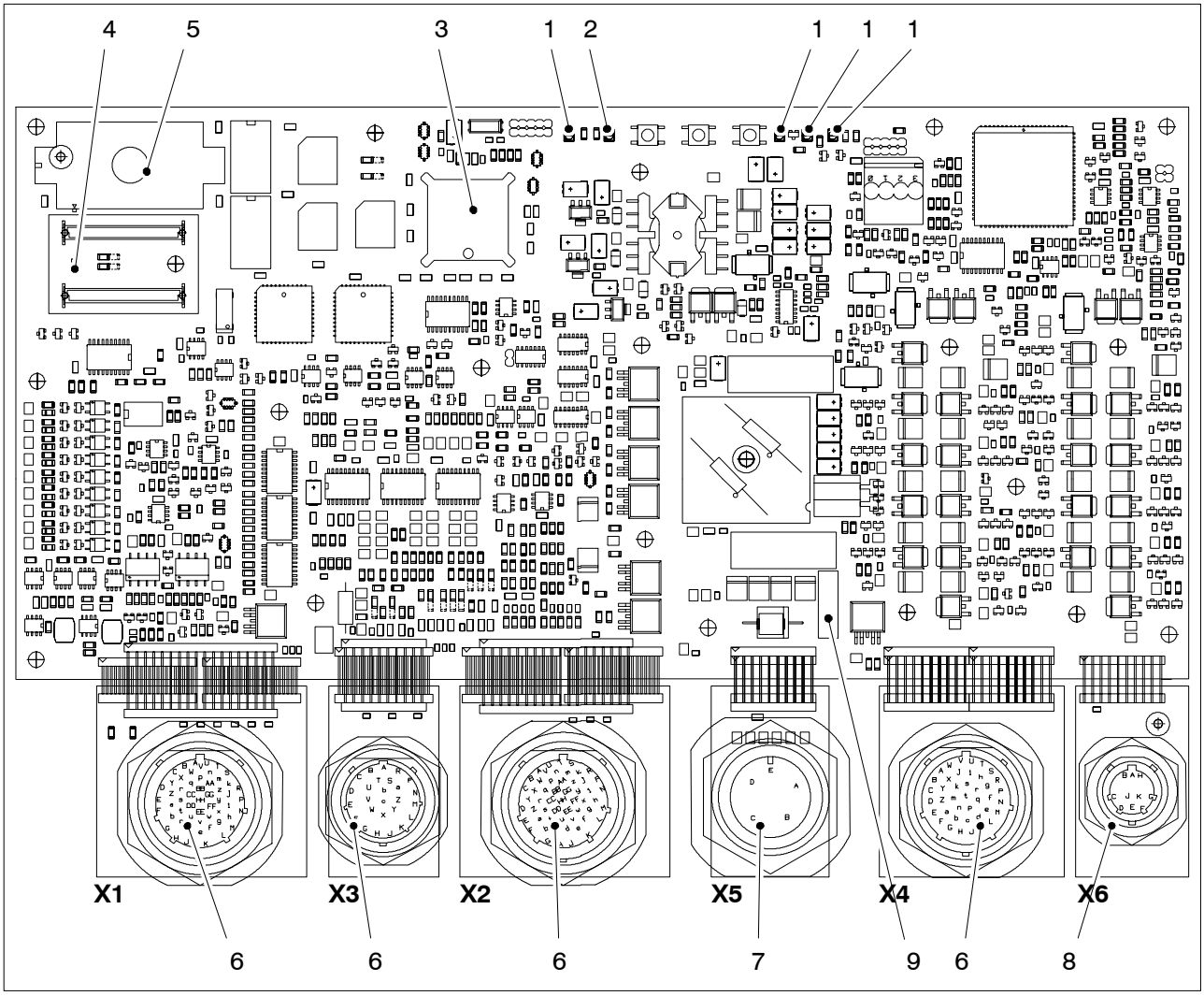

Fig. 69 : Configuration of the electronic components on printed circuit board ECB 4-01

1 LED power supply (+24 VDC, +15 VDC, –15 VDC, +5 VDC)
2 LED RESET
3 Processor
4 Engine data and program memory module EDM (MEM 6)
5 Interface data module IDM
6 Engine cable harness and plant connector
7 Power supply connector
8 Dialog unit connector
9 Fuse 30 A

The two data modules simply snap into place to facilitate replacement. The data modules are different in shape and can therefore not be confused.

Katolight Service - Master Repair Manual - Page 3353

(This page intentionally blank)

Katolight Service - Master Repair Manual - Page 3354

A Abbreviations

BR	Baureihe, series
CAN	Controller Area Network (bus system)
DIS	Display
DL	Default Lost
ECS	Engine Control System
ECU	Engine Control Unit
EMU	Engine Monitoring Unit
EMC	Electromagnetic Compatibility
ETC 2	Exhaust Turbocharger no. 2
FMEA	Failure Mode and Effects Analysis
GND	Ground
ITS	Integral Test System
kB	Kilobaud
LCD	Liquid Cristal Display
mbar	Millibar
MCS	Monitoring and Control System
MD	Missing Data
min	Minute
NiCr Ni	Nickel-Chrome Nickel
P	Pressure
PAN	Panel

Abbreviations *(cont.)*

RCS	Remote Control System
RL	Redundancy Lost
rpm	Revolutions per minute
SD	Sensor Defect
SISY	Sicherheitssystem, safety system
SS	Safety System
SYS	System
V	Volt
VAC	Volt Alternating Current
VDC	Volt Direct Current

B Connector pin assignment

Connector X1: Connector type: VPT 06 GSE 22–55 P
Target: Cable harness, plant

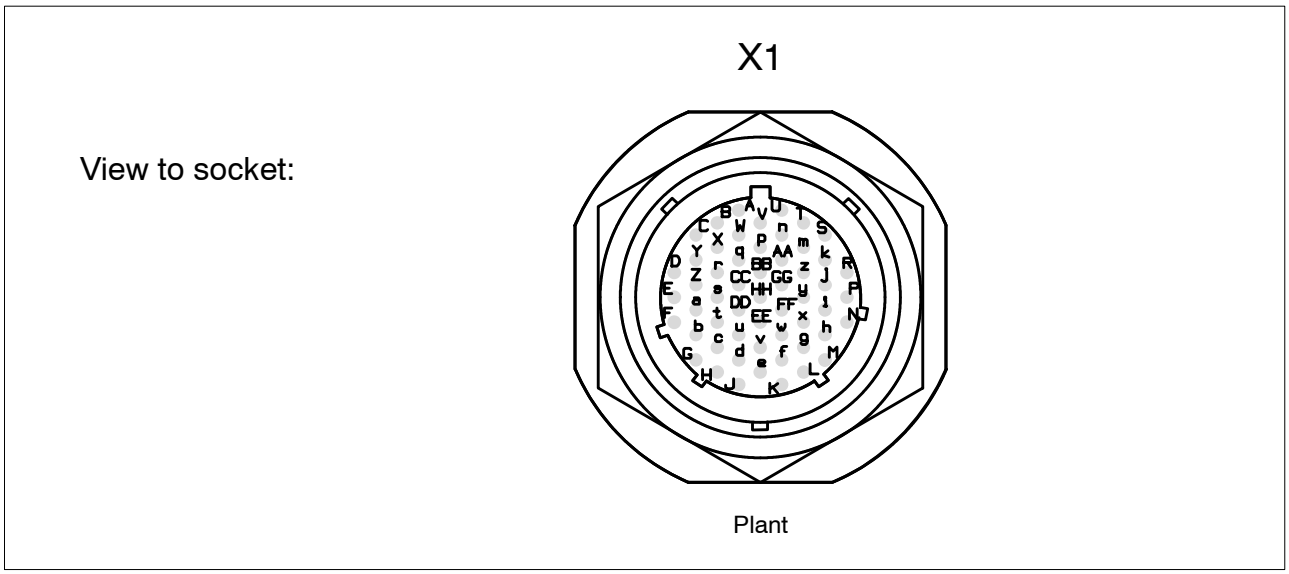

Fig. 70 : Pins connector X1

Channel	Signal	Pin	Comments
IUE1	5V_ISO	BB	5 V/20 mA electrically isolated
IUE1	U_IN	AA	0 V ... 10 V
IUE1	I_IN	X	0 V ... 23.7 mA
IUE1	GND_ISO	q	
IUE2	5V_ISO	b	5 V/20 mA electrically isolated
IUE2	U_IN	r	0 V ... 10 V
IUE2	I_IN	a	0 V ... 23.7 mA
IUE2	GND_ISO	W	
UA1	OUT	HH	0 V ... 10 V/8 mA
UA1	GND	GG	
UA2	OUT	DD	0 V ... 10 V/8 mA
UA2	GND	CC	
UA3	OUT	t	0 V ... 10 V/8 mA
UA3	GND	s	
UA4	OUT	Z	0 V ... 10 V/8 mA

Channel	Signal	Pin	Comments
UA4	GND	Y	
BE1	+IN	h	*U* <4 V = low / *U* > 8 V = high
BE1	–IN	g	Electrically isolated
BE2	+IN	x	*U* <4 V = low / *U* > 8 V = high
BE2	–IN	w	Electrically isolated
BE3	+IN	R	*U* <4 V = low / *U* > 8 V = high
BE3	–IN	P	Electrically isolated
BE4	+IN	j	*U* <4 V = low / *U* > 8 V = high
BE4	–IN	i	Electrically isolated
BE5	+IN	FF	*U* <4 V = low / *U* > 8 V = high
BE5	–IN	EE	Electrically isolated
BE6	+IN	v	*U* <4 V = low / *U* > 8 V = high
BE6	–IN	u	Electrically isolated
BE7	+IN	f	*U* <4 V = low / *U* > 8 V = high
BE7	–IN	e	Electrically isolated
BE8	+IN	d	*U* <4 V = low / *U* > 8 V = high
BE8	–IN	c	Electrically isolated
BE9	+IN	N	*U* <4 V = low / *U* > 8 V = high
BE9	–IN	M	Electrically isolated
FE1	IN	J	*U* <1.5V = low / *U* > 3.5V = high
FE1	GND	H	Frequency input
TAA1	OUT	V	24 V/600 mA
TAA1	GND	U	
TAA2	OUT	p	24 V/600 mA
TAA2	GND	n	
TAA3	OUT	T	24 V/300 mA
TAA3	GND	S	
TAA4	OUT	z	24 V/300 mA
TAA4	GND	y	

Channel	Signal	Pin	Comments
TAA5	OUT	m	24 V/300 mA
TAA5	GND	k	
TAA6	OUT	L	24 V/2 A
TAA6	GND	K	(Plant supply, moving-coil instruments FZ)
CAN1	HIGH	G	Electrically isolated
CAN1	LOW	F	
CAN1	GND	E	
CAN2	HIGH	C	Electrically isolated
CAN2	LOW	B	
CAN2	GND	D	

Note: Refer to Appendix B for detailed schematic input circuitry of the ECU (“Channel” designation in column 1).

Connector X2: Connector type: VPT 06 GSE 22-55 PW
Target: Cable harness, engine

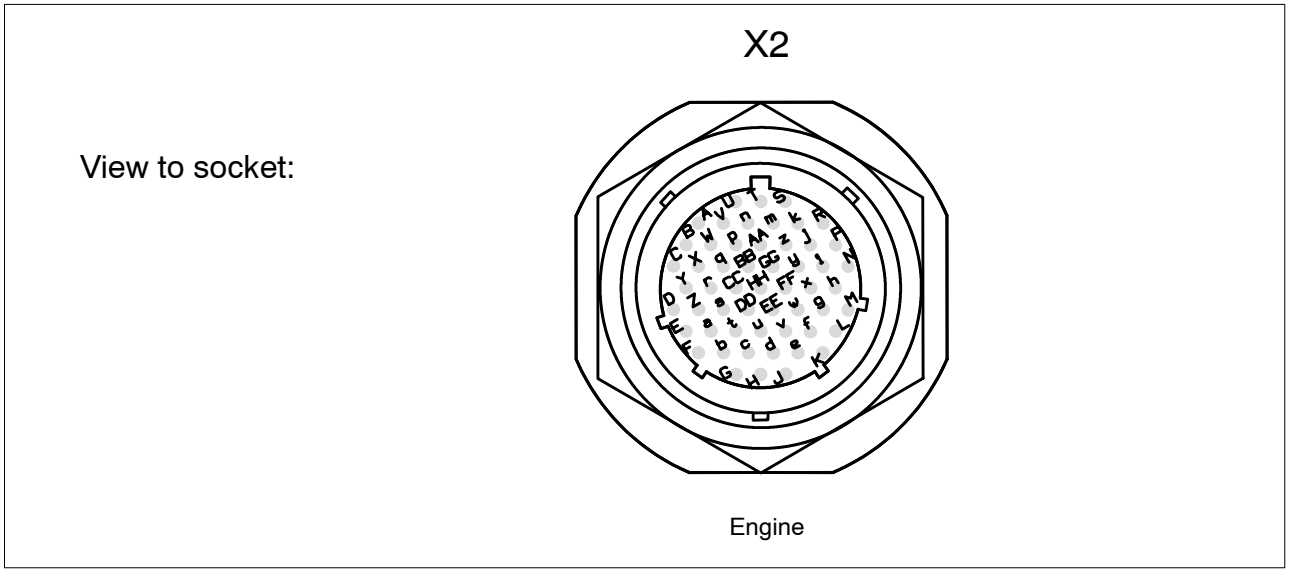

Fig. 71 : Pins connector X2

Channel	Signal	Pin	Comments
TE1	IN	k	0 V ... 5 V/internal 2k0 pullup to 5V_TE_BUF
TE1	GND	z	
TE2	IN	N	0 V ... 5 V/internal 2k0 pullup to 5V_TE_BUF
TE2	GND	P	
TE5	IN	M	0 V ... 5 V/internal 2k0 pullup to 5V_TE_BUF
TE5	GND	g	
TE6	IN	y	0 V ... 5 V/internal 2k0 pullup to 5V_TE_BUF
TE6	GND	FF	
TE7	IN	w	0 V ... 5 V/internal 2k0 pullup to 5V_TE_BUF
TE7	GND	x	
TE8	IN	t	0 V ... 5 V/internal 1k0 pullup to 5V_TE_BUF
TE8	GND	a	
TE9	IN	E	0 V ... 5 V/internal 1k0 pullup to 5V_TE_BUF
TE9	GND	F	
DE1	5V_BUF1	D	5 V/20 mA
DE1	IN	Z	0 V ... 5 V/internal 47k5 pulldown

Channel	Signal	Pin	Comments
DE1	GND	Y	
DE2	5V_BUF1	r	5 V/20 mA
DE2	IN	s	0 V ... 5 V/internal 47k5 pulldown
DE2	GND	CC	
DE3	5V_BUF2	BB	5 V/20 mA
DE3	IN	GG	0 V ... 5 V/internal 47k5 pulldown
DE3	GND	HH	
DE4	5V_BUF2	d	5 V/20 mA
DE4	IN	H	0 V ... 5 V/internal 47k5 pulldown
DE4	GND	J	
DE5	5V_BUF3	f	5 V/20 mA
DE5	IN	v	0 V ... 5 V/internal 47k5 pulldown
DE5	GND	e	
DE6	5V_BUF3	EE	5 V/20 mA
DE6	IN	DD	0 V ... 5 V/internal 47k5 pulldown
DE6	GND	u	
DE7	5V_BUF4	c	5 V/20 mA
DE7	IN	G	0 V ... 5 V/internal 47k5 pulldown
DE7	GND	b	
NSE1	24 V_NSE1	X	Sensor supply max. 300 mA
NSE1	IN	C	0 V ... 5 V/internal 47K5 pullup to 5V_TE_BUF
NSE1	GND	B	
NSE2	24 V_NSE2	W	Sensor supply max. 300 mA
NSE2	IN	q	0 V ... 5 V/internal 47K5 pullup to 5V_TE_BUF
NSE2	GND	V	
KW	+IN	m	U <0 V = low / U > 400 mV = high
KW	–IN	S	
NW	+IN	T	U <0 V = low / U > 400 mV = high
NW	–IN	n	

Channel	Signal	Pin	Comments
DME1	+IN	p	*U* <–400 mV = low / *U* > 400 mV = high
DME1	–IN	AA	
DME2	+IN	A	*U* <–400 mV = low / *U* > 400 mV = high
DME2	–IN	U	
PDM1	OUT	K	24 V/3 A
PDM1	GND	L	
TAM1	OUT	R	24 V/1.5 A
TAM1	GND	j	
TAM2	OUT	h	24 V/1.5 A
TAM2	GND	i	

Note: Refer to Appendix B for detailed schematic input circuitry of the ECU (“Channel” designation in column 1).

Connector X3: Connector type: VPT 06 GSE 16–26 P
Target: Cable harness, engine

View to socket:

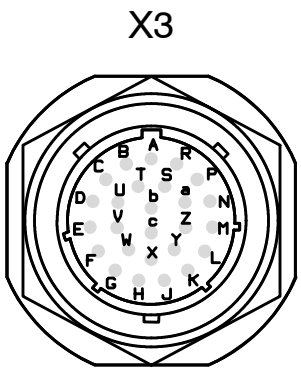

Engine extension

Fig. 72 : Pins connector X3

Channel	Signal	Pin	Comments
TE3	IN	b	0 V ... 5 V/internal 2k0 pullup to 5V_TE_BUF
TE3	GND	c	
TE4	IN	U	0 V ... 5 V/internal 2k0 pullup to 5V_TE_BUF
TE4	GND	V	
TE10	IN	E	0 V ... 5 V/internal 2k0 pullup to 5V_TE_BUF
TE10	GND	D	
DE8	5V_BUF4	J	5 V/20 mA
DE8	IN	Y	0 V ... 5 V/internal 47k5 pulldown
DE8	GND	K	
DEH	5V_BUF5	B	5 V/20 mA
DEH	IN	T	0 V ... 5 V/internal 47k5 pulldown/TP2 : 20Hz
DEH	GND	C	
NSE3	24 V_NSE3	A	Sensor supply max. 300mA
NSE3	IN	R	0 V ... 5 V/internal 47K5 pullup to 5V_TE_BUF
NSE3	GND	S	
PDM2	OUT	M	24 V/3 A

Channel	Signal	Pin	Comments
PDM2	GND	N	
TAM3	OUT	L	24 V/1.5 A
TAM3	GND	Z	
TAM4	OUT	P	24 V/1.5 A
TAM4	GND	a	
EDM	TXD	X	RS232
EDM	RXD	H	RS232
EDM	GND	F	RS232
TA_EDM	24 V_OUT	G	EDM supply/2 A
TA_EDM	GND	W	

Note: Refer to Appendix B for detailed schematic input circuitry of the ECU (“Channel” designation in column 1).

Connector X4: Connector type: VPT 06 GSE 20–41 PW
Target: Cable harness, engine (solenoid valves)

View to socket:

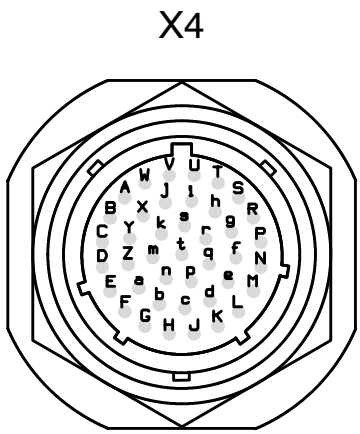

Solenoid valves

Fig. 73 : Pins connector X4

Channel	Signal	Pin	Comments
MV1	HIGH	n	24 V/20 A
MV1	LOW	m	Bank 1
MV2	HIGH	D	24 V/20 A
MV2	LOW	C	Bank 1
MV3	HIGH	F	24 V/20 A
MV3	LOW	E	Bank 1
MV4	HIGH	a	24 V/20 A
MV4	LOW	Z	Bank 1
MV5	HIGH	H	24 V/20 A
MV5	LOW	G	Bank 1
MV6	HIGH	s	24 V/20 A
MV6	LOW	r	Bank 1
MV7	HIGH	Y	24 V/20 A
MV7	LOW	X	Bank 1
MV8	HIGH	W	24 V/20 A
MV8	LOW	V	Bank 1

Channel	Signal	Pin	Comments
MV9	HIGH	k	24 V/20 A
MV9	LOW	j	Bank 1
MV10	HIGH	B	24 V/20 A
MV10	LOW	A	Bank 1
MV11	HIGH	S	24 V/20 A
MV11	LOW	R	Bank 2
MV12	HIGH	P	24 V/20 A
MV12	LOW	N	Bank 2
MV13	HIGH	i	24 V/20 A
MV13	LOW	h	Bank 2
MV14	HIGH	g	24 V/20 A
MV14	LOW	f	Bank 2
MV15	HIGH	U	24 V/20 A
MV15	LOW	T	Bank 2
MV16	HIGH	K	24 V/20 A
MV16	LOW	J	Bank 2
MV17	HIGH	M	24 V/20 A
MV17	LOW	L	Bank 2
MV18	HIGH	e	24 V/20 A
MV18	LOW	d	Bank 2
MV19	HIGH	c	24 V/20 A
MV19	LOW	b	Bank 2
MV20	HIGH	q	24 V/20 A
MV20	LOW	p	Bank 2

Note: Refer to Appendix B for detailed schematic input circuitry of the ECU (“Channel” designation in column 1).

Connector X5: Connector type: CIR 06 G2 – 18–11 S
Target: Cable harness, plant (power supply)

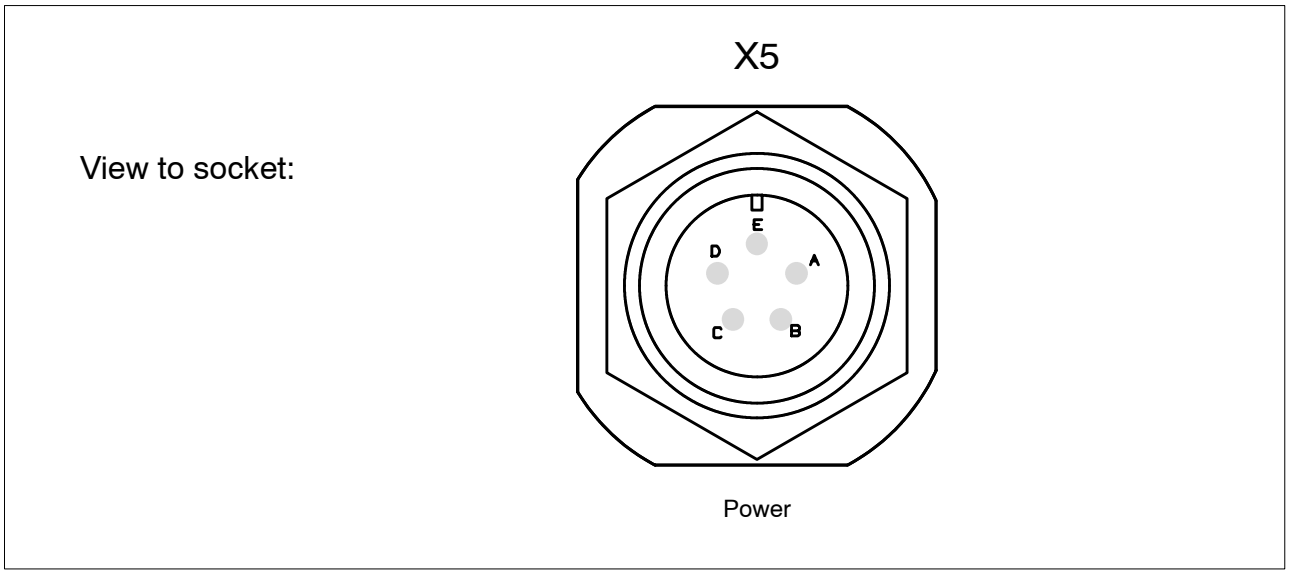

Fig. 74 : Pins connector X5

Channel	Signal	Pin	Comments
POWER	+24 V	A	U_{vers} = 24 V/30 A
POWER	+24 V	D	
POWER	GND	B	
POWER	GND	C	
POWER	GND	E	

Connecto X6: Connector type: VPT 06 GSE 12-10 P
Target: Dialog unit

View to socket:

X6

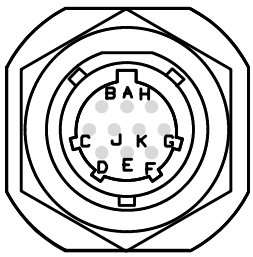

Dialog

Fig. 75 : Pins connector X6

Channel	Signal	Pin	Comments
DIALOG	TXD	B	RS232
DIALOG	RXD	A	RS232
DIALOG	GND	F	RS232
TAD	24 V_OUT	G	Dialog unit supply (max. 3 A)
TAD	GND	H	

C ECU channel input circuitry

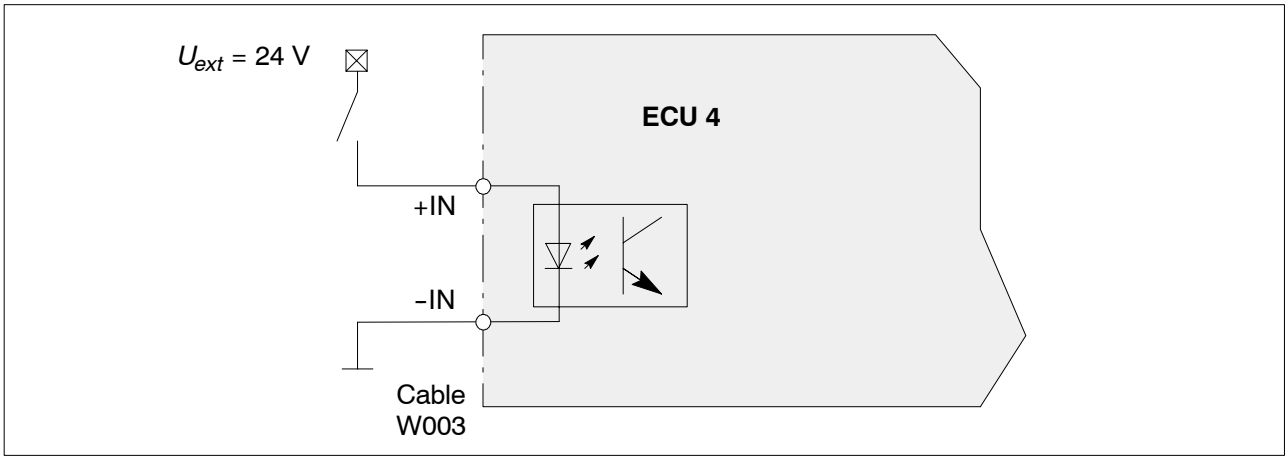

Fig. 76 : Binary input BE schematic

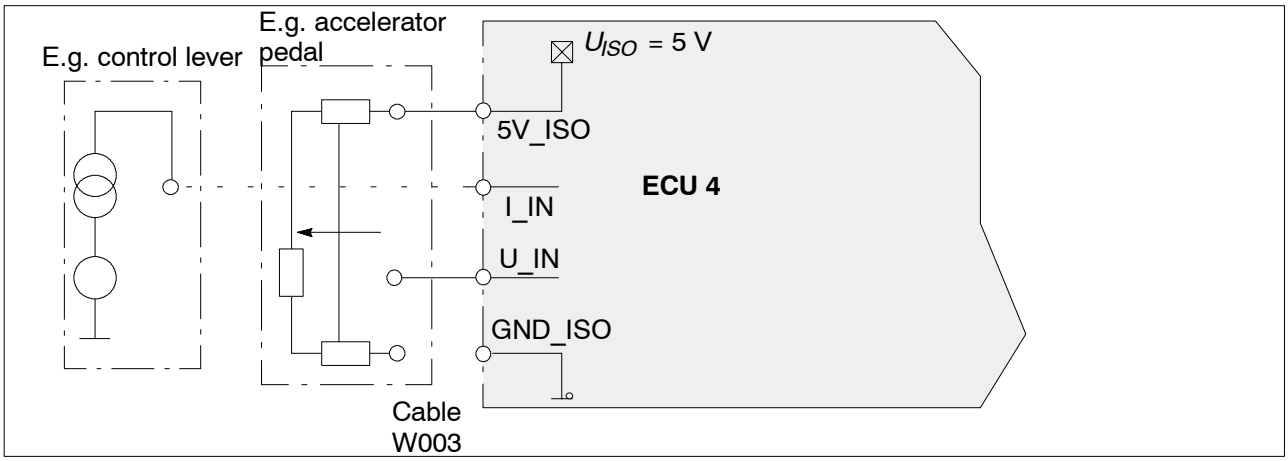

Fig. 77 : Voltage/power input IUE schematic

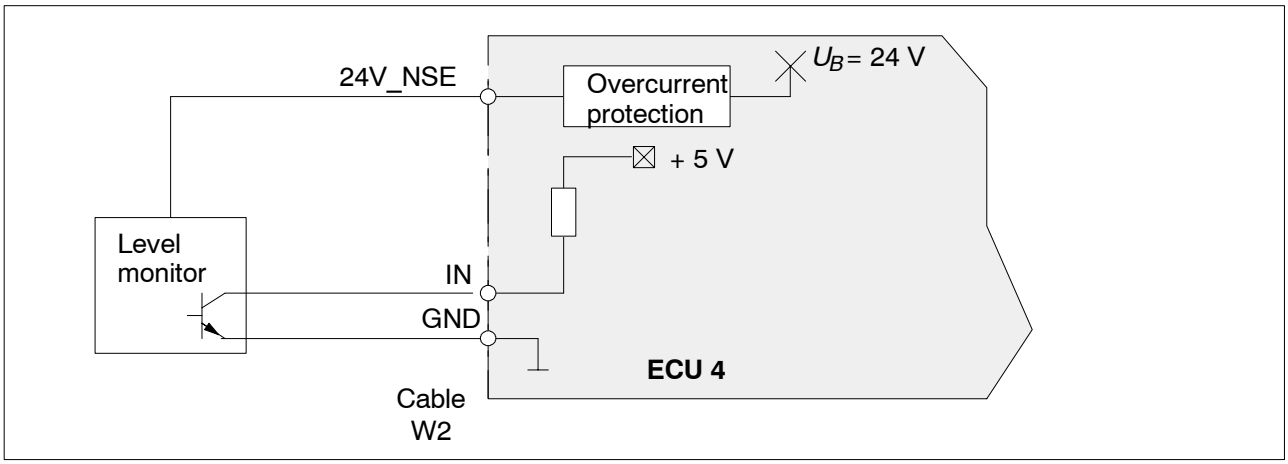

Fig. 78 : Level switching input NSE schematic

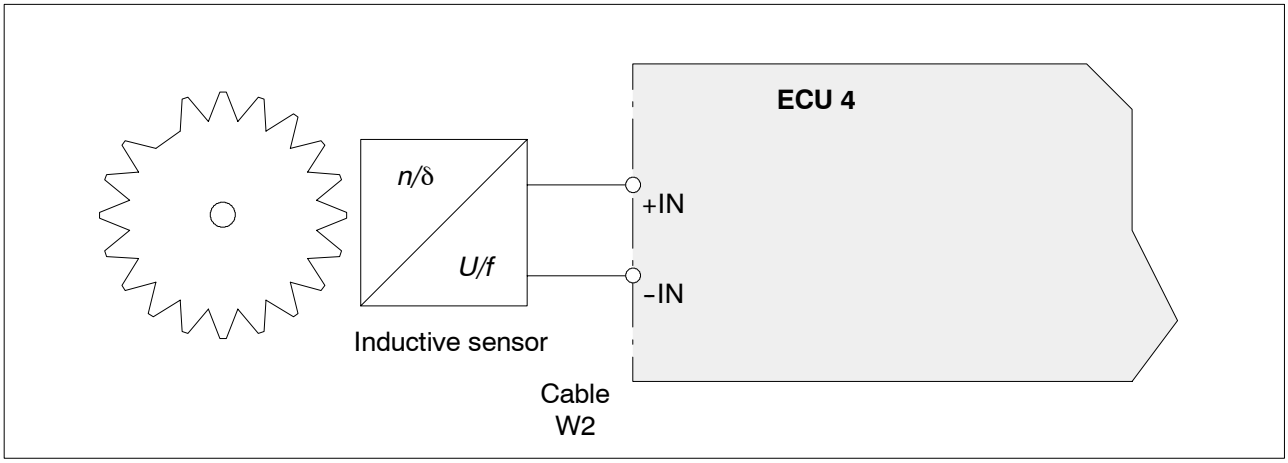

Fig. 79 : Angle measuring input KW1/NW1 schematic

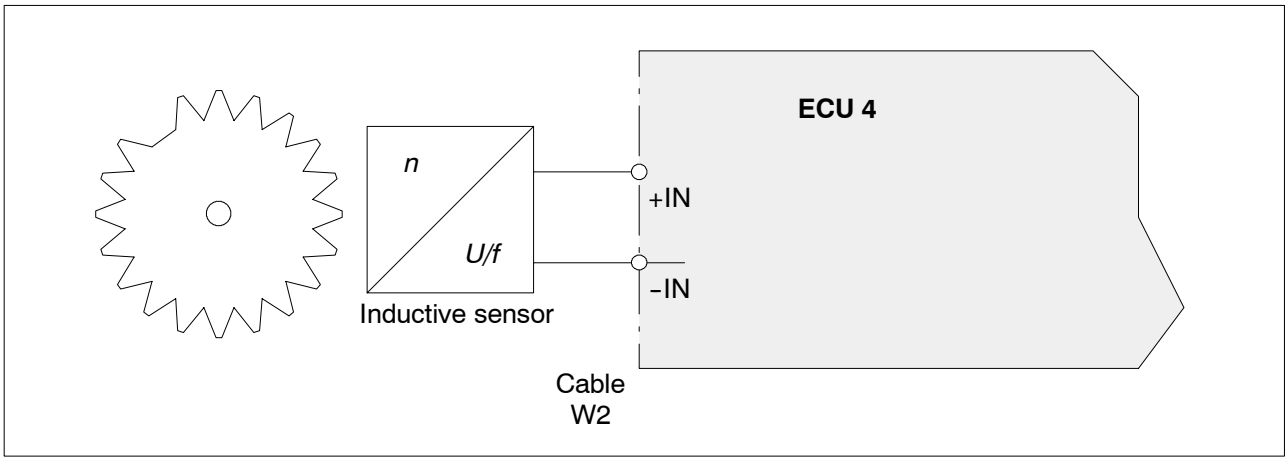

Fig. 80 : Speed measuring input DME schematic

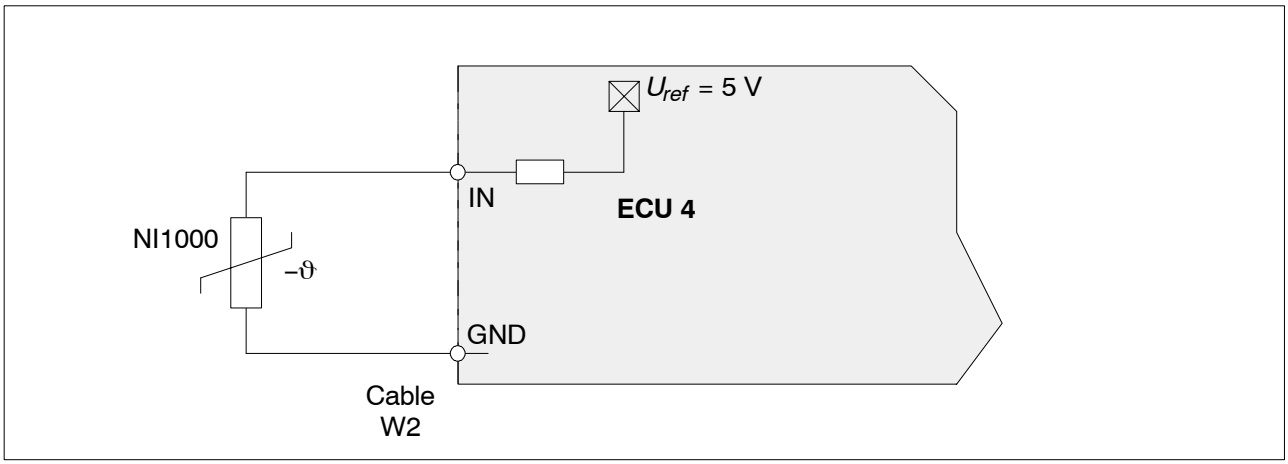

Fig. 81 : Temperature measuring input TE schematic

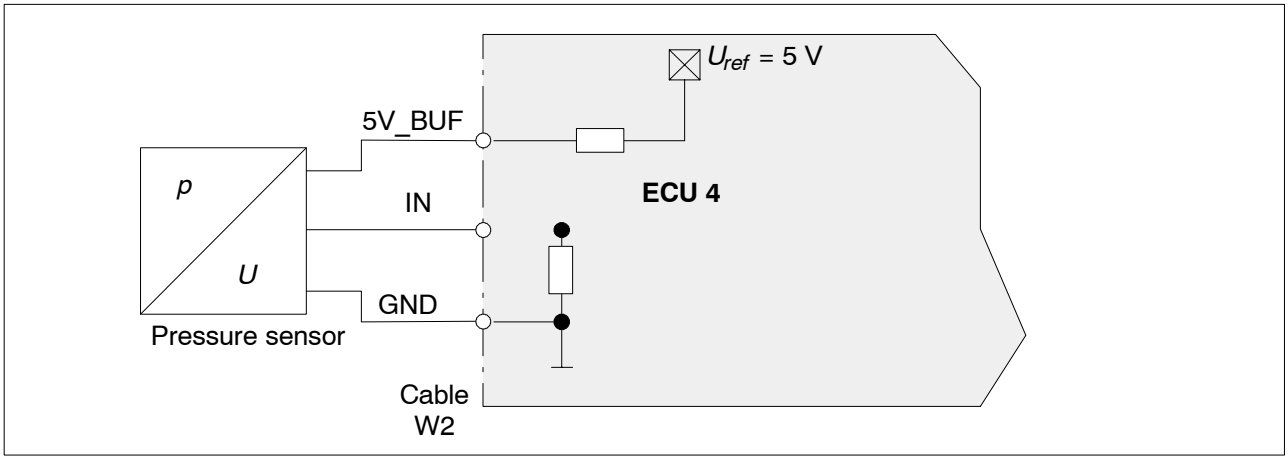

Fig. 82 : Pressure measuring input DE schematic

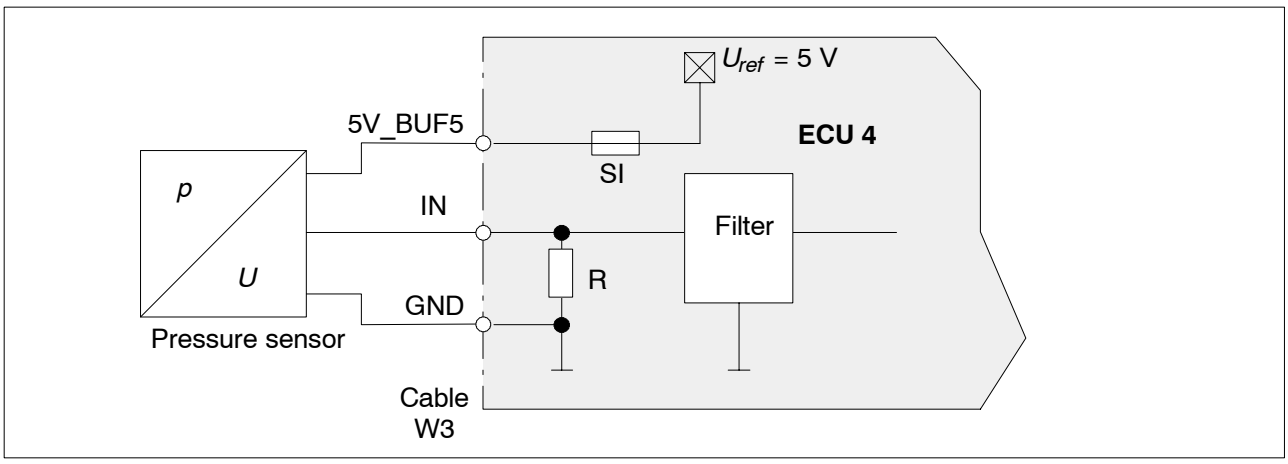

Fig. 83 : Pressure measuring input DEH schematic

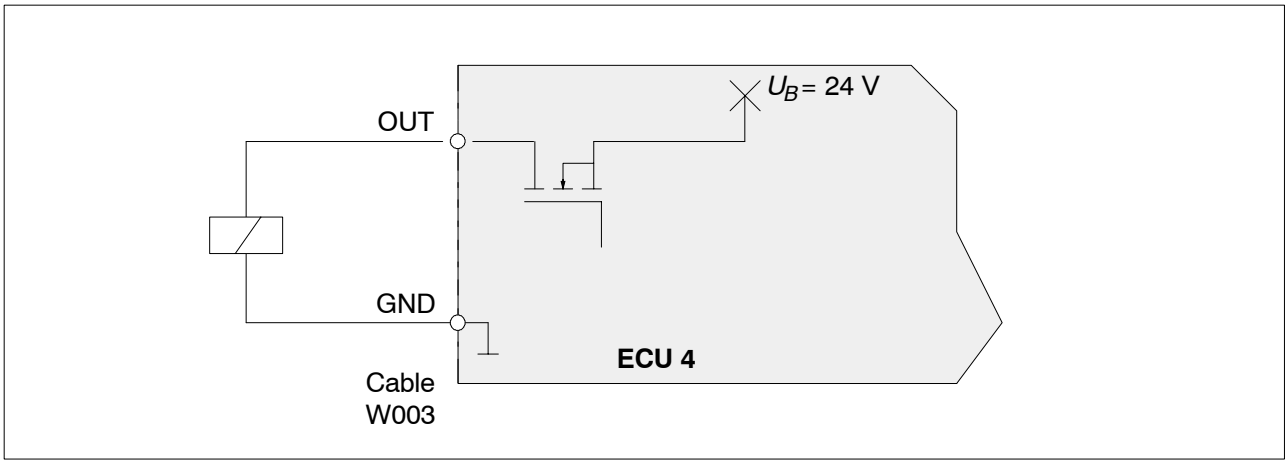

Fig. 84 : Transistor output TAA schematic

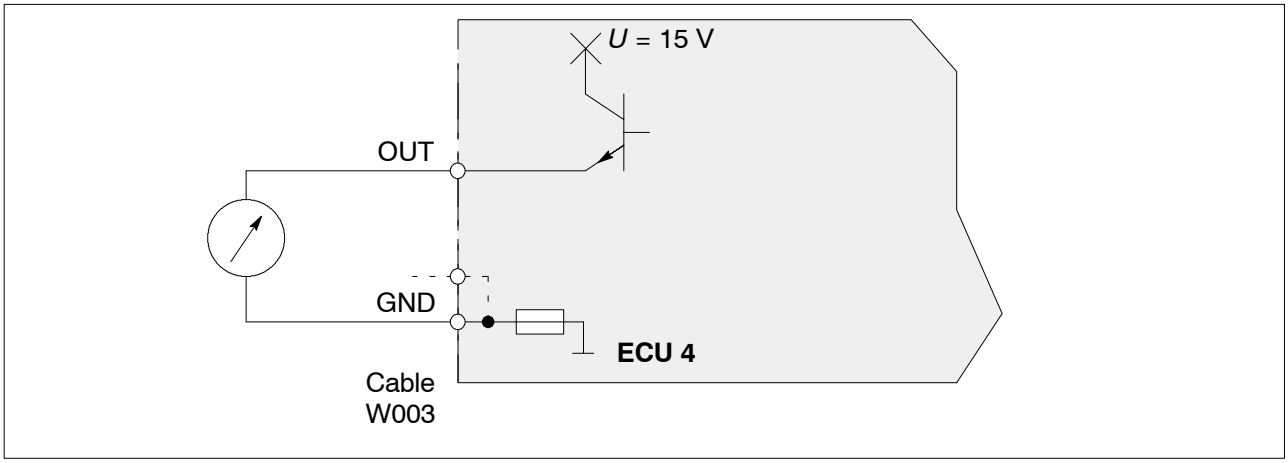

Fig. 85 : Transistor output TAA schematic

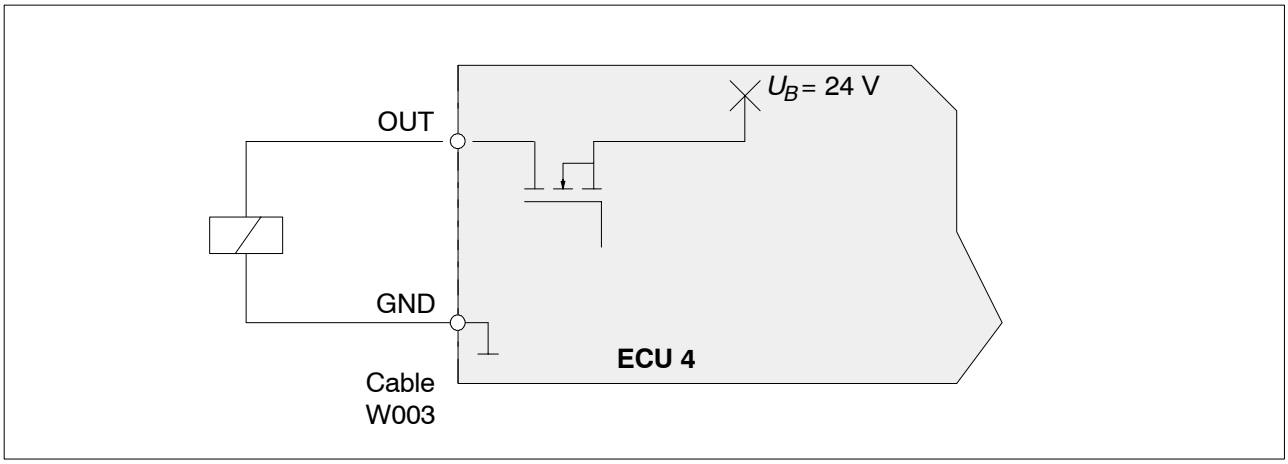

Fig. 86 : Transistor output TAM schematic

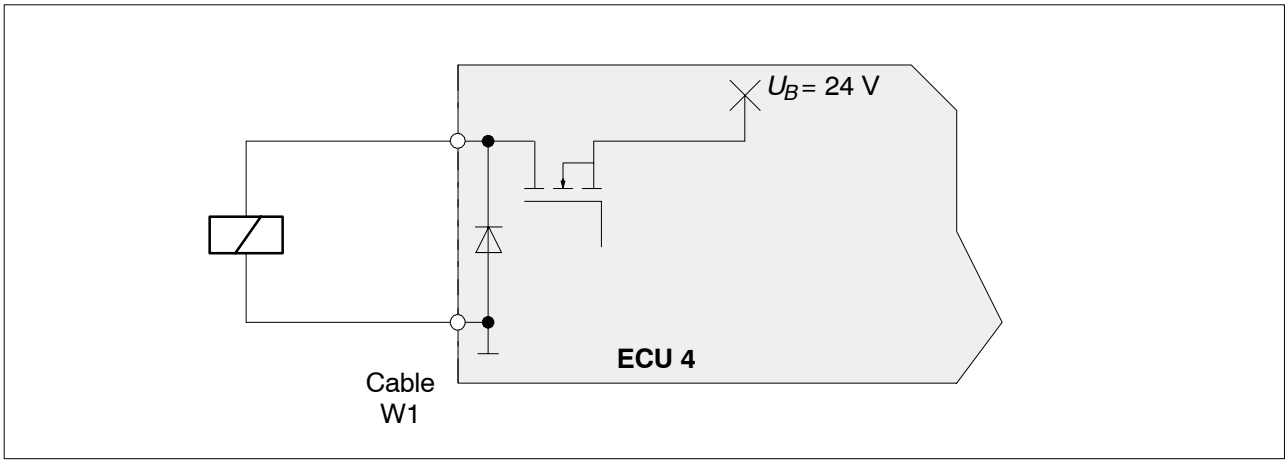

Fig. 87 : Output PDM schematic

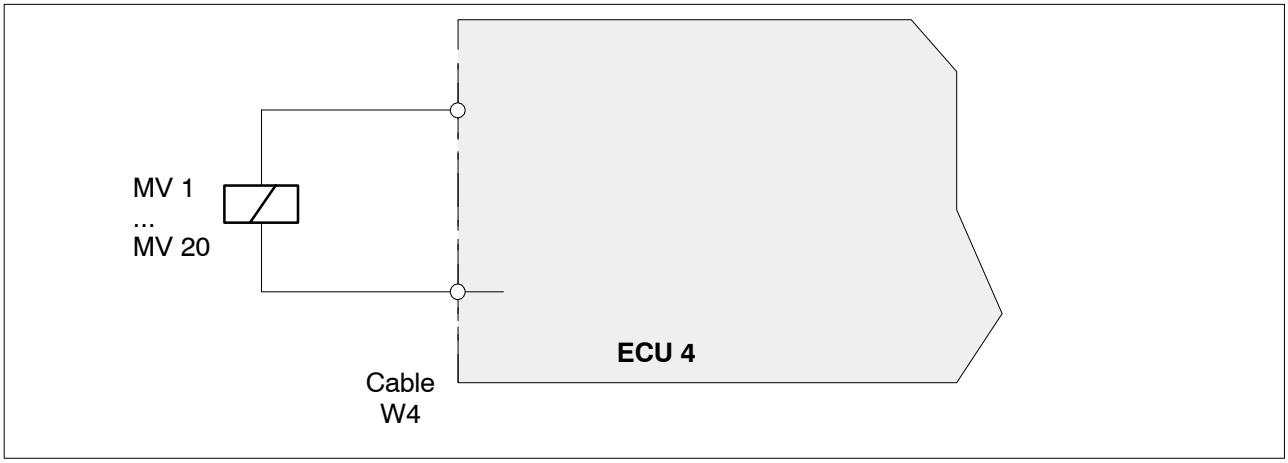

Fig. 88 : Solenoid valve output MVA (injector control) schematic

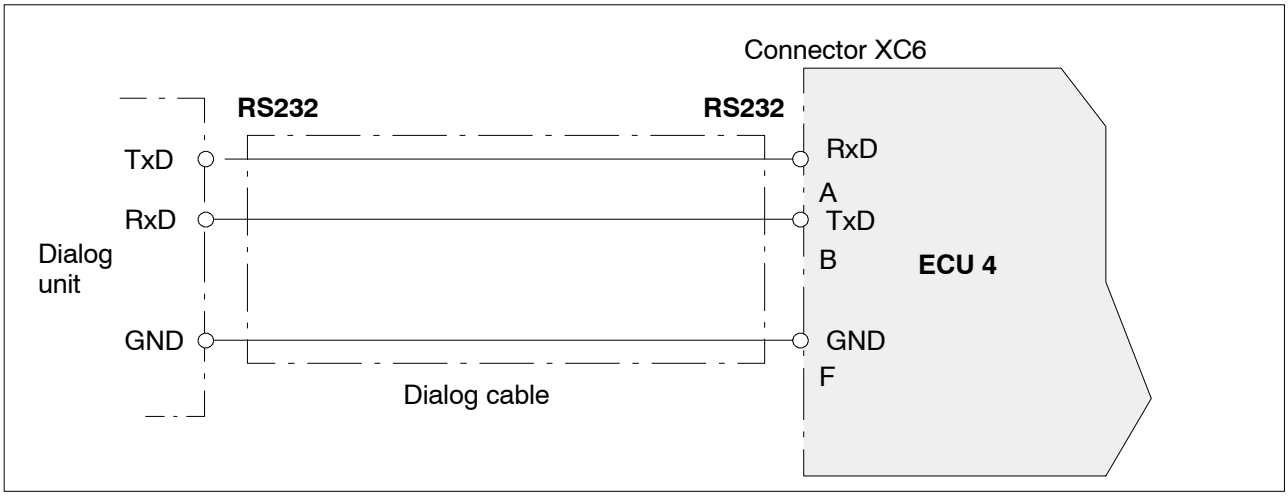

Fig. 89 : Dialog unit connection schematic

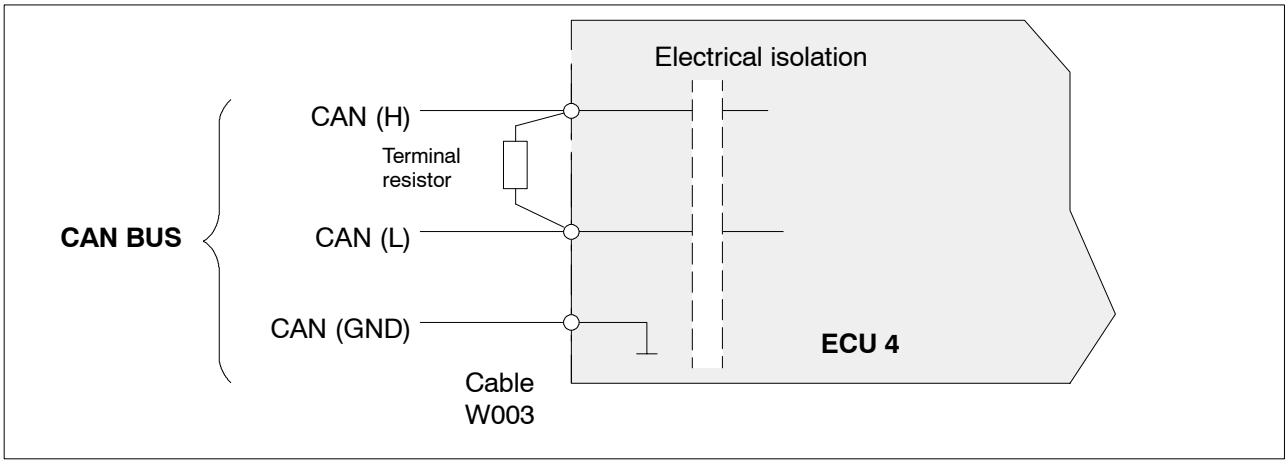

Fig. 90 : CAN bus interface schematic

(This page intentionally blank)

WOODWARD

ProAct™ Digital Speed Control System



for Models I and II

Installation and Operation Manual

Manual 04121H

WARNING
Read this entire manual and all other publications pertaining to the work to be performed before installing, operating, or servicing this equipment. Practice all plant and safety instructions and precautions. Failure to follow instructions can cause personal injury and/or property damage.

The engine, turbine, or other type of prime mover should be equipped with an overspeed (overtemperature, or overpressure, where applicable) shutdown device(s), that operates totally independently of the prime mover control device(s) to protect against runaway or damage to the engine, turbine, or other type of prime mover with possible personal injury or loss of life should the mechanical-hydraulic governor(s) or electric control(s), the actuator(s), fuel control(s), the driving mechanism(s), the linkage(s), or the controlled device(s) fail.

CAUTION
To prevent damage to a control system that uses an alternator or battery-charging device, make sure the charging device is turned off before disconnecting the battery from the system.

Electronic controls contain static-sensitive parts. Observe the following precautions to prevent damage to these parts.

- **Discharge body static before handling the control (with power to the control turned off, contact a grounded surface and maintain contact while handling the control).**
- **Avoid all plastic, vinyl, and Styrofoam (except antistatic versions) around printed circuit boards.**
- **Do not touch the components or conductors on a printed circuit board with your hands or with conductive devices.**

IMPORTANT DEFINITIONS

WARNING—indicates a potentially hazardous situation which, if not avoided, could result in death or serious injury.

CAUTION—indicates a potentially hazardous situation which, if not avoided, could result in damage to equipment.

NOTE—provides other helpful information that does not fall under the warning or caution categories.

Revisions—Text changes are indicated by a black line alongside the text.

Woodward Governor Company reserves the right to update any portion of this publication at any time. Information provided by Woodward Governor Company is believed to be correct and reliable. However, no responsibility is assumed by Woodward Governor Company unless otherwise expressly undertaken.

© 1993 by Woodward Governor Company
All Rights Reserved

Contents

CHAPTER 1. GENERAL INFORMATION 1
Introduction 1
Application 1
Control Applications 2
Speed Control Accessories 2
Actuator Accessories 2

CHAPTER 2. ELECTROSTATIC DISCHARGE AWARENESS 9

CHAPTER 3. DESCRIPTION OF OPERATION 11
General 11
Control Dynamics 11
Alternate Dynamics 12
Variable Dynamics 13
Fuel Limiters 13
Start Fuel Limit 13
Maximum Fuel Limit 13
Transient Overfuel 14
Torque Limit 15
Speed Reference and Ramps 15
Droop/Isochronous 17
Power Up Diagnostics 18
ProAct Actuator 18
Return Spring 19
The Feedback Device 19
ProAct 75 Actuator Selection 19

CHAPTER 4. INSTALLATION 21
Unpacking 21
Power Requirements 21
Control Box Location Considerations 22
Actuator Installation Considerations 22
Thermal 22
Output Coupling or Linkage 22
Fuel Position Stops 23
Actuator Bracket 23
Electrical Connections 24
Shielded Wiring 24
Power Supply 25
Actuator and Position Feedback Wiring 27
Discrete Inputs 27
Isoch/Droop Contact 27
Idle/Rated Contact 28
Lower and Raise Speed Contacts 28
Alternate Dynamics 28
Remote Reference 28
Diagnostics Request 29
Run/Stop Fuel Contact 29
Speed Signal Input 29
Remote Speed Setting Input 30
Aux Voltage Input 30

Katolight Service - Master Repair Manual - Page 3377

Contents

Control Outputs 30
Actuator Control 30
Speed Switches 30
Fault Lamp 31
Actuator Position Feedback 31
Installation Checkout Procedure 31

CHAPTER 5. OPERATION AND ADJUSTMENT 33
Introduction 33
Using the Hand Held Programmer 33
ProAct Control Menus 36
Menu 1—Dynamics Settings 36
Menu 2—Alternate Dynamics Settings 36
Menu 3—Speed Reference Settings 37
Menu 4—Limiter Settings 37
Menu 5—Monitor Menu 38
Menu 6—Configuration Set Points 38
Menu 0—Error Menu 38
Description of Menu Set Points 39
Menu 1—Dynamics Settings 39
Gas Engine Setup 41
Diesel Engine Setup 42
Control Gain Programming Steps 42
Stability, Actuator Compensation, Gain Ratio, Window Width 45
Menu 2—Alternative Dynamics Settings 45
Menu 3—Speed Reference Settings 46
Menu 4—Limiter Settings 50
Menu 5—Monitor Menu 51
Menu 6—Configuration Set Points 53
Menu 0—Error Menu 53
Conclusion of Test and Calibration Procedures 55

CHAPTER 6. SYSTEM TROUBLESHOOTING CHARTS 57

CHAPTER 7. SERVICE OPTIONS 63
Product Service Options 63
Replacement/Exchange 63
Flat Rate Repair 64
Flat Rate Remanufacture 64
Returning Equipment for Repair 64
Packing a Control 65
Return Authorization Number 65
Replacement Parts 65
How to Contact Woodward 66
Engineering Services 66
Technical Assistance 68

APPENDIX. MENU SUMMARY 69
Initial Prestart Settings 69
Menu 1—Dynamics Settings 69
Menu 2—Alternative Dynamics Settings 69
Menu 3—Speed Reference Settings 70

Katolight Service - Master Repair Manual - Page 3378

Contents

Menu 4—Limiter Settings 70
Menu 6—Configuration Set Points 70
ProAct Control Menu Summary....71

PROACT CONTROL SPECIFICATIONS .... inside back cover

Illustrations and Tables

1-1. Flexible Coupling 3
1-2. ProAct Digital Speed Control and Actuator 3
1-3. Example of ProAct II Actuator (CSA Version) 4
1-4. Outline Drawing of ProAct I or II Actuator....5
1-5. ProAct Wiring Diagram 6
1-6. Outline Drawing of ProAct Control Box 7
3-1. Window Width for Gain Ratio....12
3-2. Start Fuel Limit....14
3-3. Transient Overfuel 14
3-4. Torque Limit....15
3-5. Remote Speed Reference 17
3-6. Droop Speed Setting 17
3-7. ProAct Output Travel 18
4-1. Diesel Engine Travel Stops 23
4-2. Carburetor Travel Stops 23
4-3. Examples of Actuator Brackets....24
4-4. Preparing Shielded Wiring 25
4-5. Correct Wiring to Power Supply....26
4-6. Incorrect Power Supply Wiring 26
4-7. Speed Switch Operation 30
5-1. Hand Held Programmer (9907-205)....35
5-2. Typical Transient Response Curves....40
5-3. Non-linear Valve Power Curve 41
5-4. Sample Engine Plot 41
5-5. Linearized Engine Plot....42
5-6. Example of Plot Created from GAIN Column 44
5-7. Example of Plot Created from ACTUATOR OUTPUT Column 44
5-8. Accel/Decel Example....47
5-9. Droop Curve....48
5-10. Idle Droop 49
5-11. Speed Switch Settings....49
5-12. Torque Limit Map....51
5-13. Dynamics Map Curves....54

Katolight Service - Master Repair Manual - Page 3380

Chapter 1
General Information

Introduction

This manual describes the Woodward ProAct™ Digital Speed Control and ProAct 75 degree electric powered actuators, models I and II.

Application

The ProAct control system is designed to control the speed of engines in mechanical drive or generator set service. The electric powered ProAct actuator has 75° of rotation and is designed for direct drive of the butterfly valve on gas engines, and through linkage the racks on diesel engines.

Actuators are available in different sizes to fit specific control demands. In most cases, the ProAct II actuator will be used. The ProAct II provides 6.8 J (5.0 ft-lb) of work (transient) and 2.7 N·m (2.0 lb-ft) of torque.

The ProAct I is extremely fast and provides 3.4 J (2.5 ft-lb) of work (transient) and 1.4 N·m (1.0 lb-ft) of torque at steady state. ProAct I controls may be operated on nominal 12 Vdc systems. ProAct II controls require nominal 24 Vdc supply.

Larger output ProAct III and ProAct IV controls are available. Information on these actuators is in manual 04127.

The ProAct Digital Speed Control includes an input for a 4 to 20 mA remote speed reference setting, an internal speed reference for local control of speed, and an auxiliary voltage input for load-sensor connection in load-sharing applications. A fuel limiting version is also available.

The ProAct control system includes:
- a ProAct Digital Speed Control
- an external 18–32 Vdc (24 Vdc nominal) power source for Model II or a 10–32 Vdc power source for Model I
- a speed-sensing device (MPU)
- a ProAct I or ProAct II actuator to position the fuel rack
- a hand held terminal for adjusting control parameters
- an optional load sensing device

The ProAct Digital Speed Control (Figure 1-2) consists of a single printed circuit board in a sheet metal chassis. Connections are via two terminal strips and a 9-pin J1 connector.

The control chassis has an aluminum shield to protect the circuits from electromagnetic interference (EMI) and electrostatic discharge (ESD).

Katolight Service - Master Repair Manual - Page 3381

Control Applications

The ProAct II control requires 18–32 Vdc (24 Vdc nominal) uninterrupted power supply, with 125 watts as the maximum power consumption at rated voltage. ProAct I requires 8–32 Vdc (12 or 24 Vdc nominal) uninterrupted power supply with 50 W as the maximum power consumption at rated voltage.

ProAct actuators are designed to directly link to the butterfly in the gas engine carburetor. The control can be programmed to have variable gain to compensate for the variable gain characteristics of carbureted gas engines.

Diesel engine applications can use the control programmed to accommodate non-linear fuel controls or non-linear linkage arrangements.

Speed Control Accessories

Hand Held Programmer (Figure 5-1, part number 9907-205) is used to adjust the ProAct control. It plugs into the serial port (J1 connector) of the control.

Generator Load Sensor (part number 9907-026) for load sharing or droop-parallel generator applications. This will connect to the Aux input on the control.

SPM-A Synchronizer for synchronizing the generator phase to that of the power bus. The synchronizer generates a close-generator-breaker signal to parallel the generator with the power bus. Connect the synchronizer to the Aux input to bias the speed setting.

Actuator Accessories

Electrical plug to match plug on the actuator:

1631-187 straight plug
1631-633 90° plug

Actuator Lever for linkage connection:

3699-027 5-inch, 5 holes
3952-043 2-inch, 2 holes

Flexible Couplings for direct connection of the actuator output to a carburetor's butterfly-valve shaft (dimension “X” in Figure 1-1):

Diameter of Butterfly Valve Shaft	Part Number
0.250	1431-431
0.312	1431-433
0.375 (9.5 mm)	1431-435
0.394 (10 mm)	1431-437
0.472 (12 mm)	1431-439
0.500	1431-443
0.625	1431-445
0.750	1431-447
0.875	1431-449

Katolight Service - Master Repair Manual - Page 3382

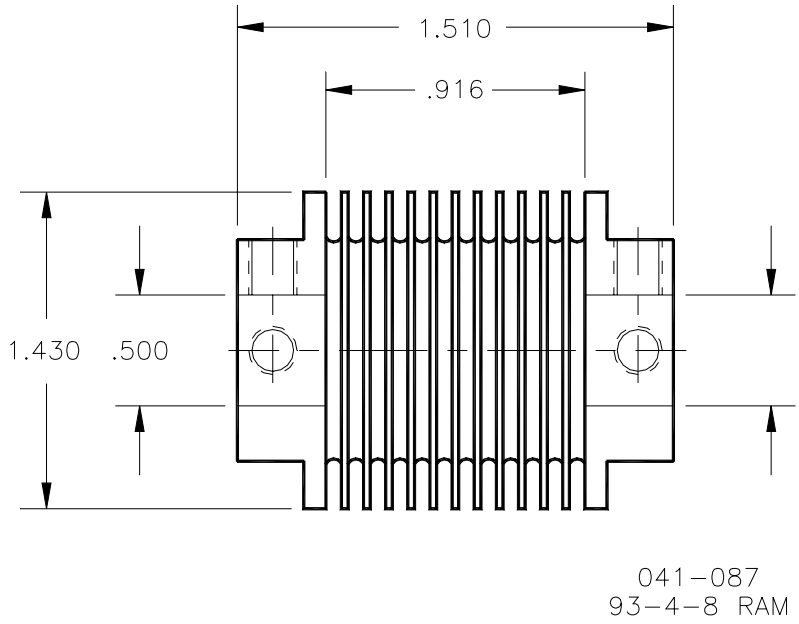

Figure 1-1. Flexible Coupling

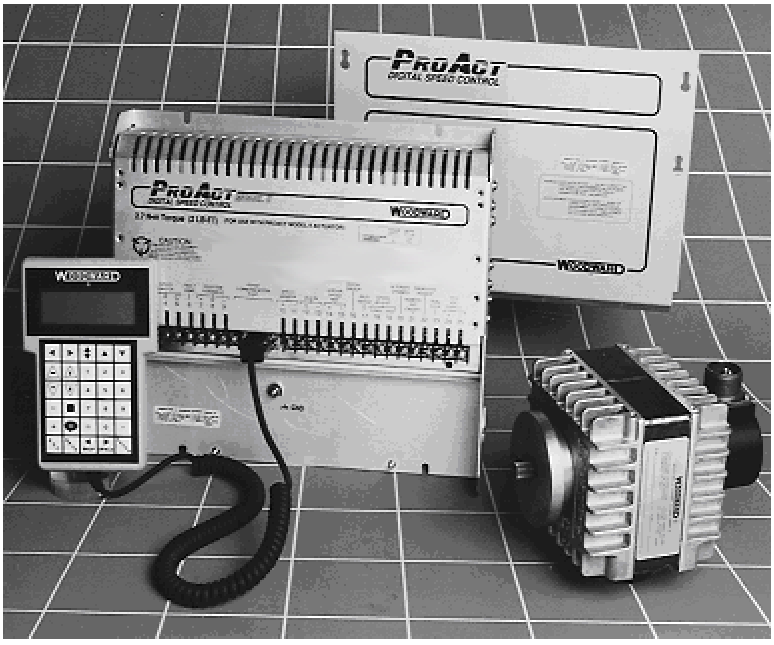

Figure 1-2. ProAct Digital Speed Control and Actuator

Katolight Service - Master Repair Manual - Page 3383

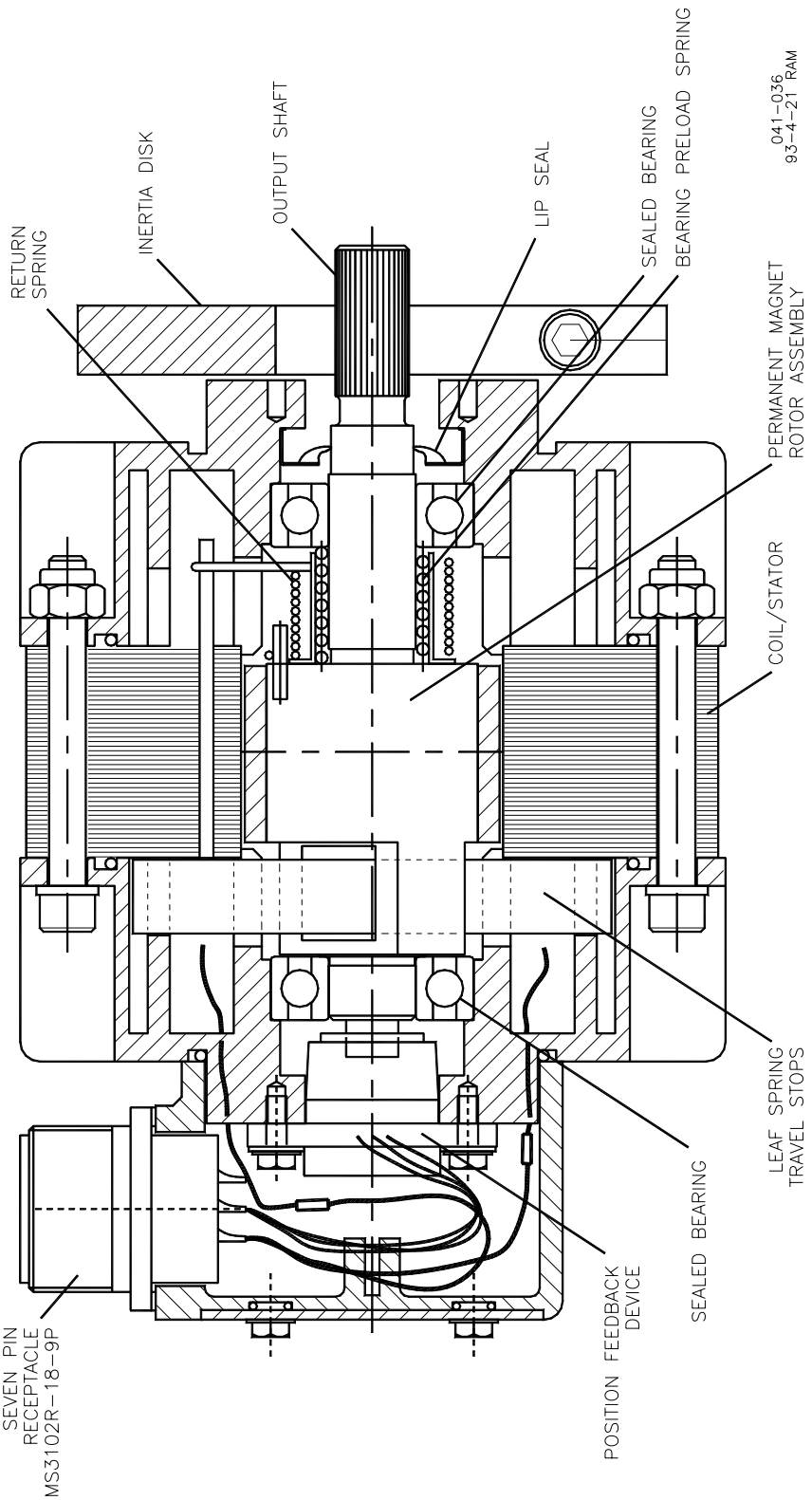

Figure 1-3. Example of ProAct II Actuator (CSA Version)

Katolight Service - Master Repair Manual - Page 3384

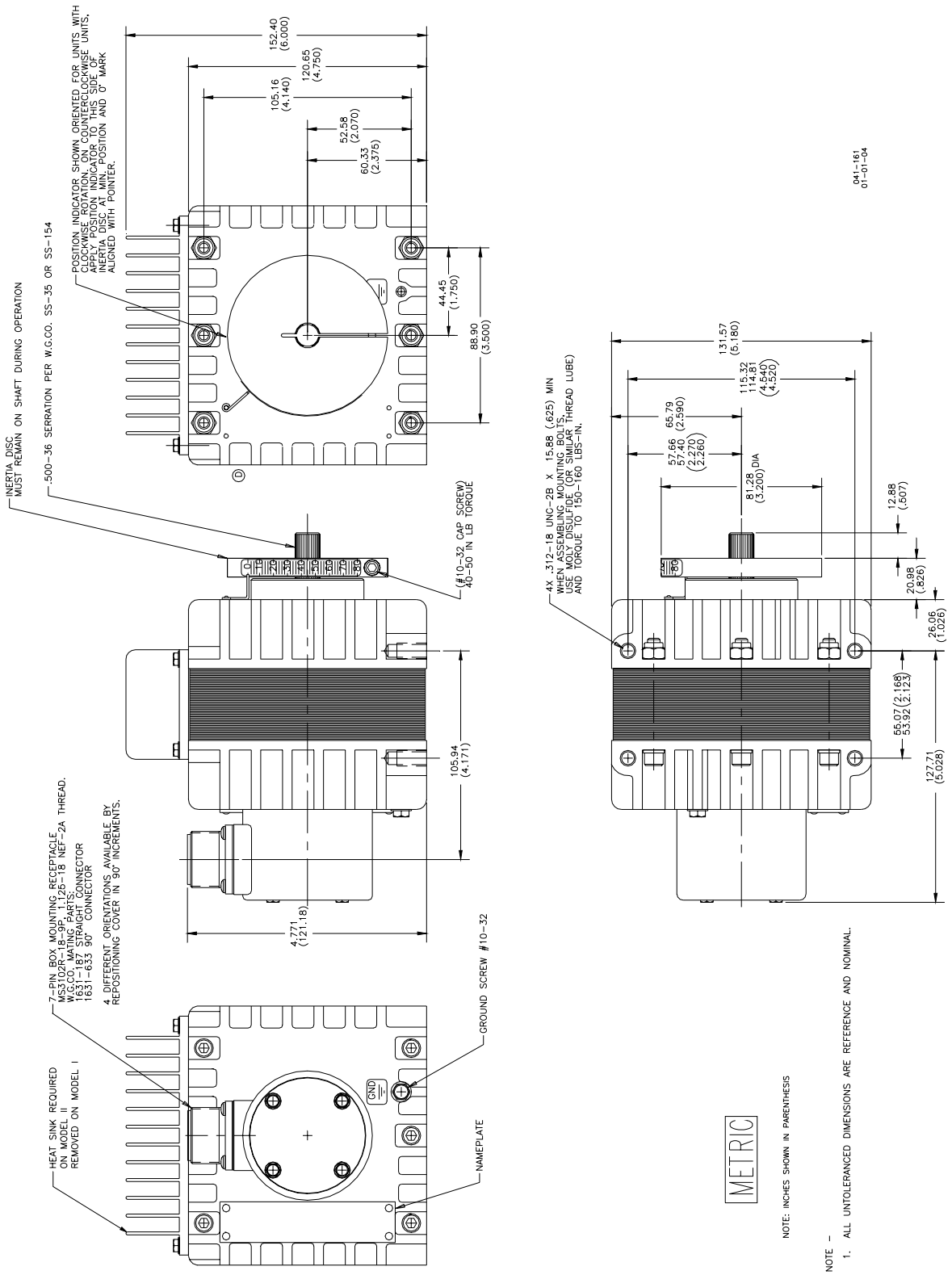

Figure 1-4. Outline Drawing of ProAct I or II Actuator

Katolight Service - Master Repair Manual - Page 3385

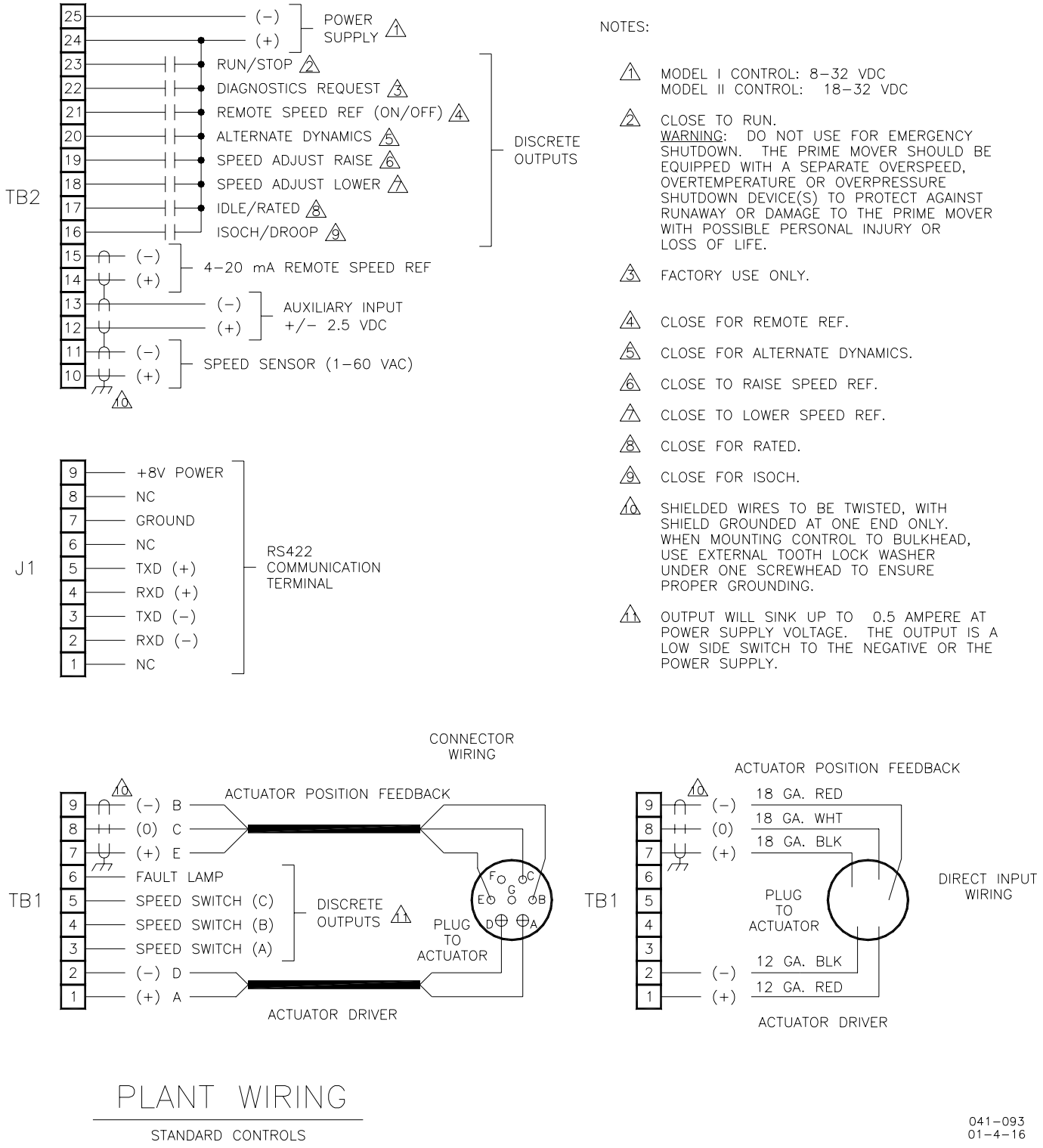

Figure 1-5. ProAct Wiring Diagram

Katolight Service - Master Repair Manual - Page 3386

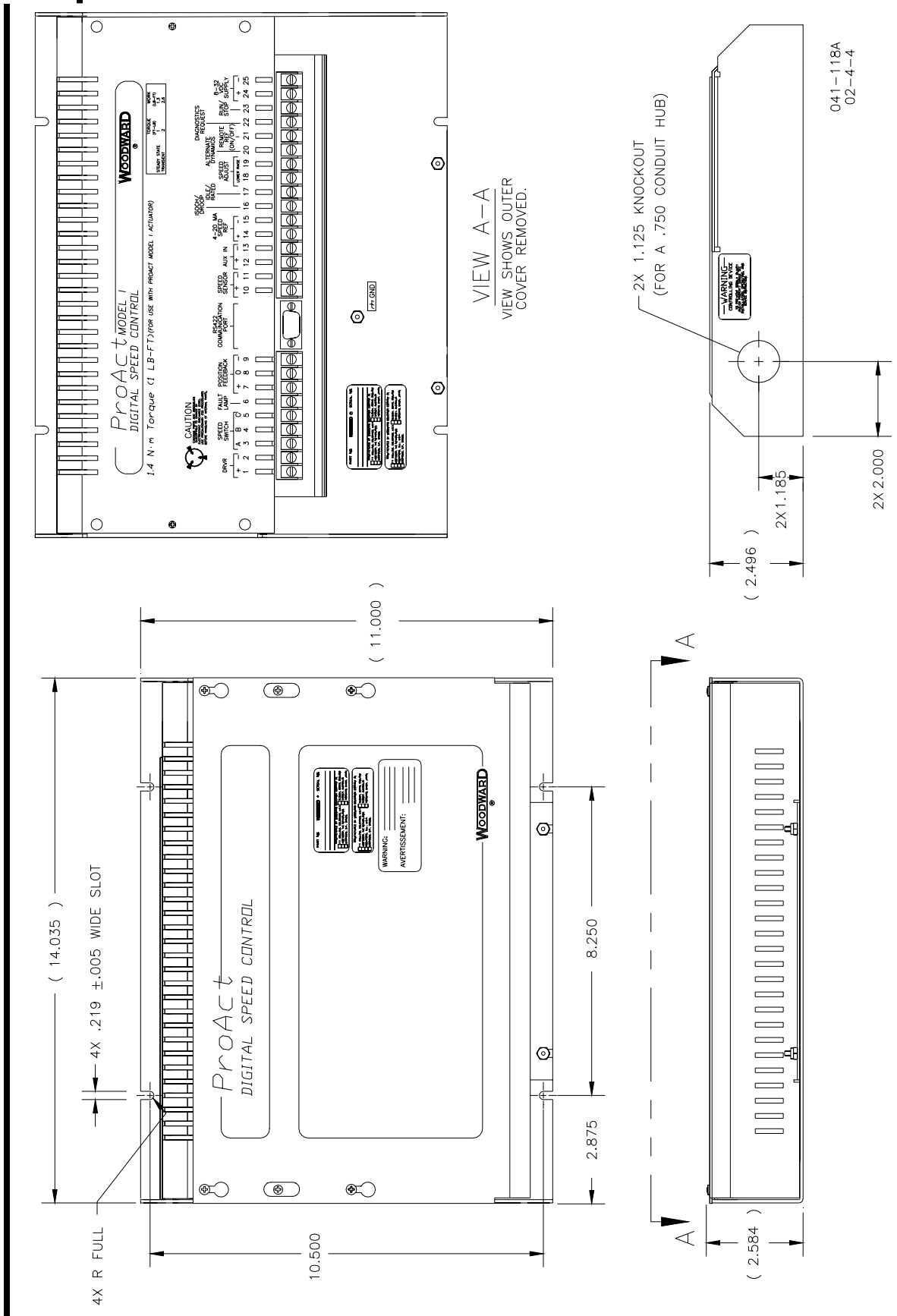

Figure 1-6. Outline Drawing of ProAct Control Box

Katolight Service - Master Repair Manual - Page 3387

Katolight Service - Master Repair Manual - Page 3388

Chapter 2
Electrostatic Discharge Awareness

All electronic equipment is static-sensitive, some components more than others. To protect these components from static damage, you must take special precautions to minimize or eliminate electrostatic discharges.

Follow these precautions when working with or near the control.

1. Before doing maintenance on the electronic control, discharge the static electricity on your body to ground by touching and holding a grounded metal object (pipes, cabinets, equipment, etc.).

2. Avoid the build-up of static electricity on your body by not wearing clothing made of synthetic materials. Wear cotton or cotton-blend materials as much as possible because these do not store static electric charges as much as synthetics.

3. Keep plastic, vinyl, and Styrofoam materials (such as plastic or Styrofoam cups, cup holders, cigarette packages, cellophane wrappers, vinyl books or folders, plastic bottles, and plastic ash trays) away from the control, the modules, and the work area as much as possible.

4. Do not remove the printed circuit board (PCB) from the control cabinet unless absolutely necessary. If you must remove the PCB from the control cabinet, follow these precautions:

   - Do not touch any part of the PCB except the edges.

   - Do not touch the electrical conductors, the connectors, or the components with conductive devices or with your hands.

   - When replacing a PCB, keep the new PCB in the plastic antistatic protective bag it comes in until you are ready to install it. Immediately after removing the old PCB from the control cabinet, place it in the antistatic protective bag.



CAUTION
To prevent damage to electronic components caused by improper handling, read and observe the precautions in Woodward manual 82715, *Guide for Handling and Protection of Electronic Controls, Printed Circuit Boards, and Modules*.

Katolight Service - Master Repair Manual - Page 3389

Katolight Service - Master Repair Manual - Page 3390

Chapter 3
Description of Operation

General

This chapter provides an overview of the features and operation of the ProAct™ Digital Speed Control and Actuator system. Figure 1-4 shows the actuator outline. Figure 1-5 is the wiring diagram for reference in the following descriptions. Figure 1-3 is a schematic cutaway view of the ProAct II actuator.

The ProAct Digital Speed Control uses a 16-bit microprocessor for all control functions, such as computing engine speed, performing the control algorithm calculations, speed ramps, etc. All control adjustments are made with a hand held terminal/display (see Figure 5-1) that communicates with the control via a serial port. The terminal/display is disconnected from the control when not in service to provide security against tampering.

The operating program is adjusted through seven menus accessed through the hand held terminal display. Details of these seven menus are contained in Chapter 5 of this manual.

The speed sensor contains a special tracking filter, designed for reciprocating engines, which minimizes the effects of engine torsionals or irregularities in the gear used for sensing speed. This provides exceptionally smooth steady-state control and allows the control dynamics to be matched to the engine.

The speed signal itself is usually provided by a magnetic pickup supplying an AC signal from 1 to 60 Vrms to the control. The frequency (in Hz) is proportional to engine rpm.

The control features exceptional spike, ripple, and EMI (electromagnetic interference) rejection. Discrete inputs are optically isolated and capable of rejecting EMI and variable resistances in switch or relay contacts. Analog inputs are differential-type with extra filtering for common-mode noise rejection. This protects the control from spurious interference and noise which can cause speed and load shifts. The chassis should be bolted to a good ground to ensure effective EMI/RFI protection.

An auxiliary ±2.5 volt input is provided to interface with Woodward Load Sensors, to provide isochronous load-sharing operation.

Control Dynamics

The algorithms used in the ProAct control are designed specifically for reciprocating engine applications. Control dynamics vary automatically as functions of both speed and actuator position to provide better performance over the entire engine operating range.

Katolight Service - Master Repair Manual - Page 3391

Alternate Dynamics

The ProAct control provides two complete sets of dynamic adjustments, which are externally switch selectable. The two sets of dynamics are provided for use where engine operating conditions change, such as in systems which use two different fuels, clutched-in loads, and electrical power generation where the unit may be operated stand-alone and paralleled with an infinite bus.

Each set of dynamics provides different gain mapping, stability, compensation, gain ratio, and gain window settings. This allows instantaneous changes in control for engines which operate with different fuels or have load-type changes which require different dynamics.

Gain Ratio is the ratio of Gain setting during transient off-speed conditions to the gain setting at steady state. Speed Gain Ratio operates by multiplying the Gain set point by the Gain Ratio when the speed error is anticipated to be greater than the Window Width. This allows a lower gain at steady state for better stability and reduced steady-state actuator movement (see Figure 3-1).

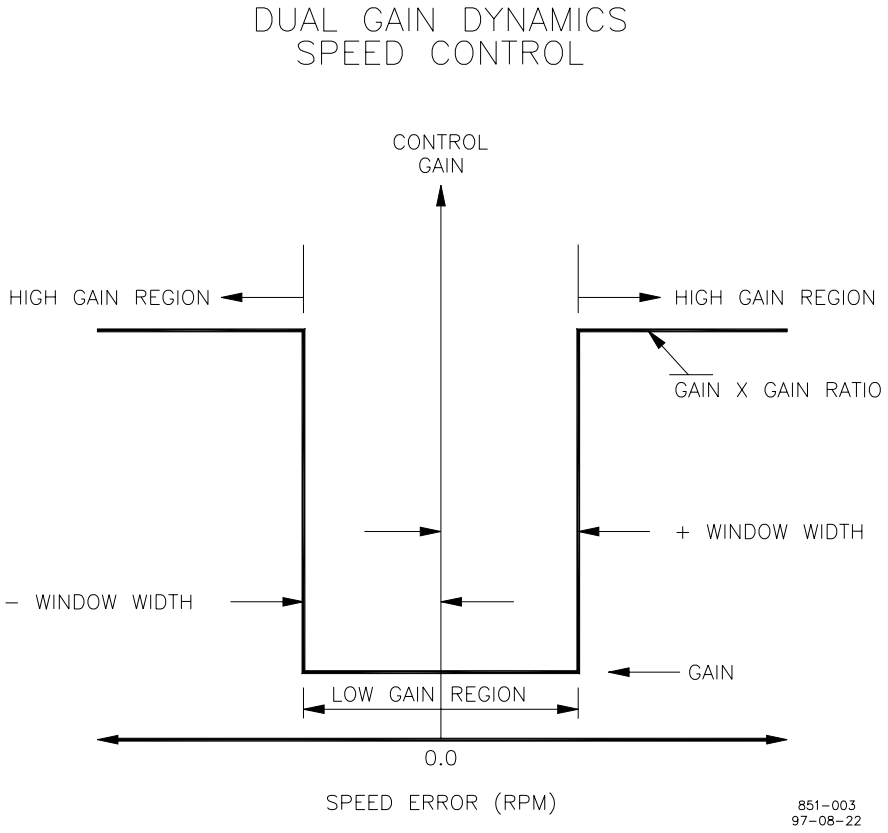

Figure 3-1. Window Width for Gain Ratio

During steady-state operation with a constant load, the control uses the base gain setting. This gain is adjusted by the user to a value to prevent the control from responding to minor fluctuations in engine speed, a common problem with gas-fuel, spark-ignited engines.

Katolight Service - Master Repair Manual - Page 3392

This feature eliminates the potentially damaging jiggle of the actuator and fuel system. The control automatically increases gain by an adjustable gain ratio when speed error exceeding an adjustable window occurs, or is anticipated to occur, based on measurements of the instantaneous rate of change of the entire engine. Operation with base gain is restored once the control senses the return to steady-state speed. The Window Width speed is a ± value, centered around zero speed error.

Variable Dynamics

The control is designed to compensate for non-linear fuel systems and changes in engine dynamics with load. The control gain is mapped as a function of actuator position.

Four break points work with four gain settings to map the actuator against expected non-linear conditions. This provides optimal dynamics and smooth steady-state operation for all conditions from no load to full engine load. The four different response rates are achieved by the creation of four different gain settings. Gas engine installations will usually require all four gain settings for different fuel flows, especially if the actuator is direct-coupled to the butterfly. Most diesel applications will need only one or two of the gain settings with the break points of the other settings moved up out of the way (set to 100%).

Fuel Limiters

Start Fuel Limit

The ProAct control has a start fuel limiter to provide smoother transitions and less over-fueling during start-up. The limiter is set to provide the desired position during starts. The control will reduce the fuel when the start speed set point is reached as required to control engine speed, but will not exceed the Start Limit. The Start Fuel limit is removed when the engine speed reaches the Start Speed set point.

The Start Fuel limit is combined with a user-tunable ramp that will increase the Start Fuel limit at a programmable rate while the engine speed is below the Start Speed set point. This ramp is designed to allow for easier starting of the engine during various temperature conditions, such as a cold start, which may require an increase in fuel.

Maximum Fuel Limit

This programmable actuator position limit is in place when rated speed is selected. This is the maximum actuator position setting allowed for steady-state full load.

Katolight Service - Master Repair Manual - Page 3393

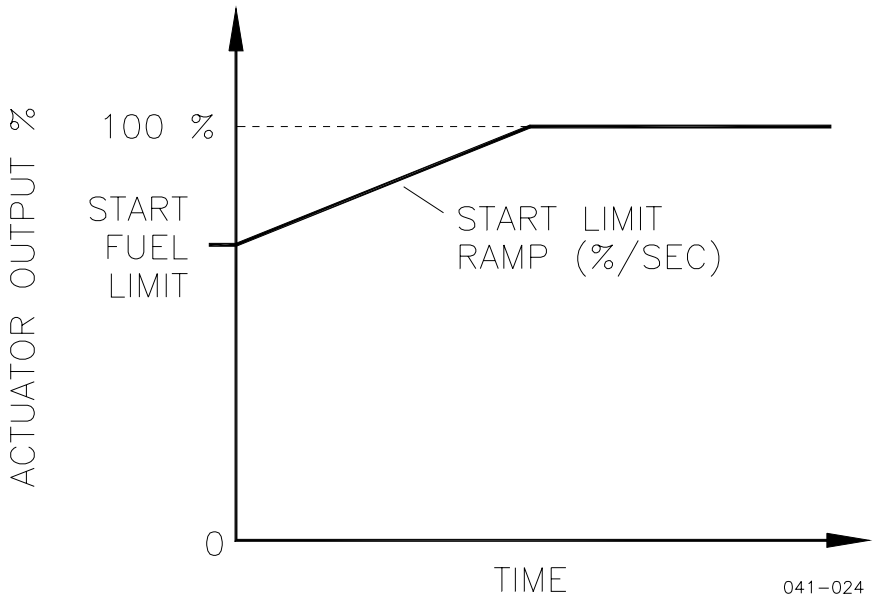

Figure 3-2. Start Fuel Limit

Transient Overfuel

This feature allows the user to set the Maximum Fuel Limit near the rated engine horsepower. The Transient Overfuel will allow exceeding this Maximum Fuel Limit for a tunable percentage for a tunable time (Transient Time). This ensures good transient load acceptance while maintaining safe steady-state-horsepower limiting.

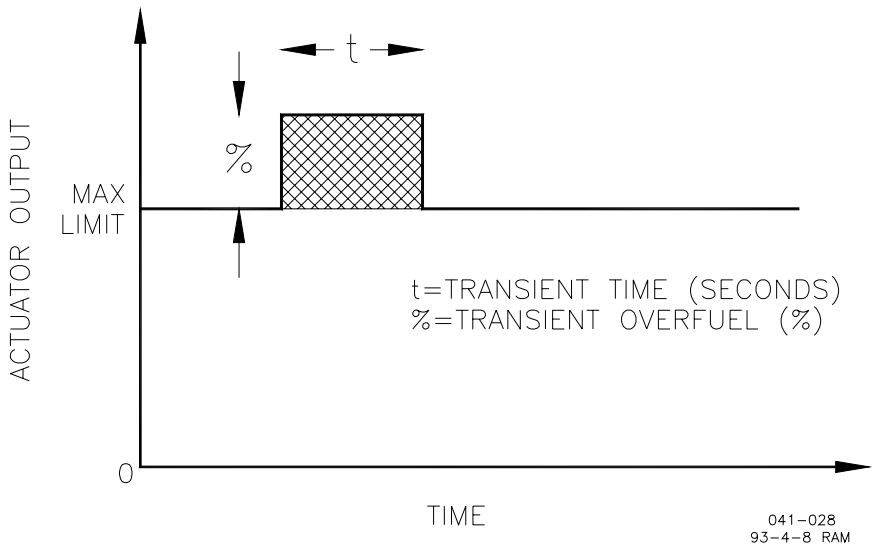

Figure 3-3. Transient Overfuel

Katolight Service - Master Repair Manual - Page 3394

Torque Limit

A two-slope torque limiter is provided for mechanical-drive, variable-speed applications. The torque limiter provides a maximum fuel position determined by current engine speed to limit over-fueling. The torque limiter is compared with the maximum fuel limit and the lower percent value is used as the actuator position limit.

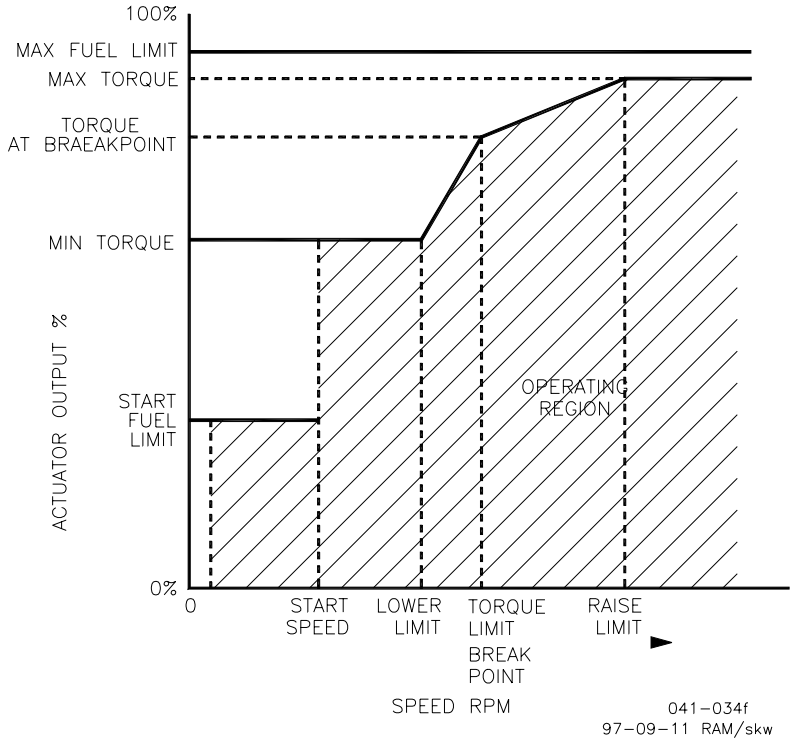

Figure 3-4. Torque Limit

Speed Reference and Ramps

The ProAct control provides discrete local control of the speed reference with switch inputs to issue raise and lower speed commands. For remote speed setting, the control permits a 4 to 20 mA input which is used to vary the speed reference. This section describes the operation of each of the speed reference and ramp functions and their relation to each other. Read this section carefully to be sure your switch gear sequencing provides the proper operating modes.

The control provides an Idle/Rated discrete input with tunable Idle and Rated Speed settings. Raise and Lower inputs will raise and lower the speed reference at tunable rates.

Katolight Service - Master Repair Manual - Page 3395

The Idle Speed set point is provided for engine start-up or cool-down speed. Idle speed may be set equal to or less than the Rated Speed set point. Idle Speed is independent of the Lower Limit set point and may be set to a lower speed. When Idle is selected (Idle/Rated switch in Idle position with contacts open), Remote Speed Reference and Raise and Lower inputs are disabled. Idle speed cannot be changed except through programming the Idle Speed set point. The Idle Speed set point value can be changed using the hand held or PC when the engine is running, however the idle speed of the engine will remain at the previous set point until the Idle/Rated or Run/Stop switch has been toggled, or power cycled on the control.

When Rated Speed is selected by closing the Idle/Rated switch contact, the fuel limit is set to the Maximum Fuel Limit set point value or the Torque Limit, whichever is less, for the current engine operating speed. The speed reference selected at this time is determined by the status of the Enable Remote switch. If Remote reference is not selected (the Remote reference switch contacts are open), the speed reference will ramp from low idle to rated speed, based on the Accel Time set point. Closing either the Raise or Lower contacts (or the Remote contacts) while ramping from idle to rated results in immediate cancellation of the idle-to-rated ramp. The Raise/Lower ramp rates will take over, depending on whether Raise or Lower is selected.

The Raise and Lower commands ramp engine speed based on the Raise and Lower Rate set points. The Raise and Lower Limits determine the limits of these commands. If Enable Remote is selected (and Rated Speed is selected), the control will ramp speed to the reference value set by the remote speed-setting milliamp input (at the Raise or Lower Rate). The remote speed setting operates from 4 to 20 mA. The values of the 4 mA and 20 mA Remote Reference set points must be set between the Raise and Lower Limit set points. The 4 mA Remote Reference set point may be set to a lower or higher speed than the 20 mA set point, providing for either direct or reverse-acting remote speed setting.

If Remote is selected when the Idle/Rated switch contacts are closed, or during the idle-to-rated ramp, the speed reference will ramp to the speed reference value determined by the milliamps on the remote speed-setting input, based on the Raise Rate/Lower Rate set points.

Remote speed-setting inputs between 2 and 4 mA are treated as the minimum of 4 mA. Below 2 mA, the remote input is considered failed. Between 4 and 20 mA, the control determines the required speed reference based on a straight line interpolated between the 4 mA Remote Reference and 20 mA Remote Reference set points. If a difference is detected between the current speed reference and the remote reference computed from the mA input, the current speed reference is raised or lowered at the rate determined by the Raise or Lower Rate to bring the speed reference into agreement with the remote speed reference. The remote reference will not increase speed over the Raise Limit or lower it below the Lower Limit, nor change speed faster or slower than the Raise Rate/Lower Rate respectively.

Katolight Service - Master Repair Manual - Page 3396

When Remote Reference is selected and the remote input is failed (less than 2 mA), the speed reference remains at the current value. The speed reference can be changed in this situation only by increasing the remote reference above 2 mA or by opening the Remote Enable switch and toggling the Run/Stop switch or cycling the power to the control (cycling the power is *not* recommended).

When the current operating mode is Rated, switching to Idle results in ramping engine speed to idle based on the Decel Time set point.

If the control is in Remote Speed Reference and you wish to return to Rated Speed, the Remote switch must be in the open position and the Run/Stop switch toggled (or cycle the power to the control, which is *not* recommended).

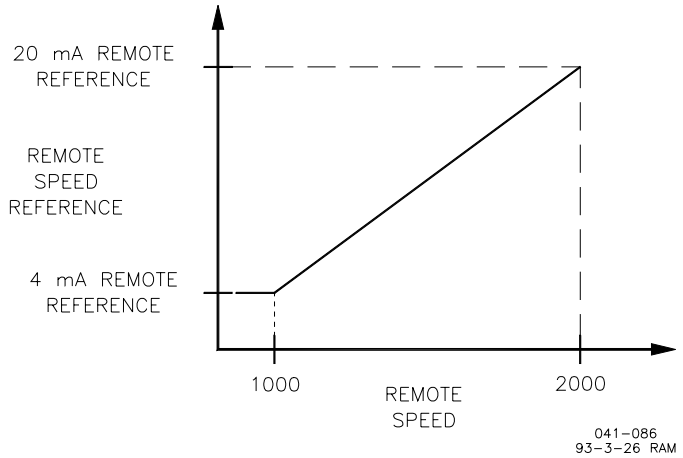

Figure 3-5. Remote Speed Reference

Droop/Isochronous

The Droop/Isochronous switch allows selection of either type of governor operation. If Droop is selected, the ProAct control will hold engine speed according to a droop schedule entered in the program.

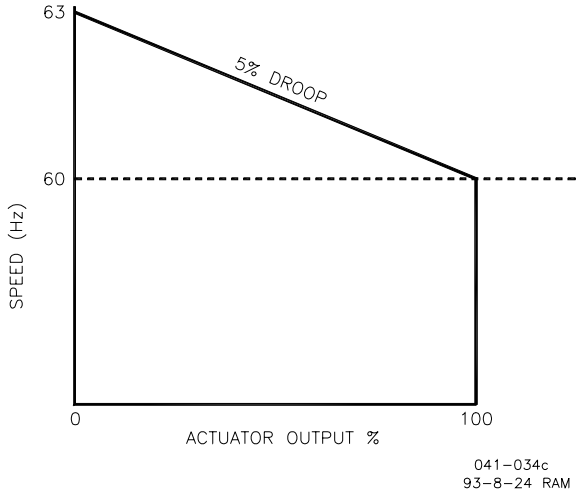

Figure 3-6. Droop Speed Setting

Katolight Service - Master Repair Manual - Page 3397

The droop schedule is based on a full 75 degrees of actuator rotation between minimum and maximum fuel. If less than 75 degrees of rotation is used, the amount of droop is reduced proportionally. Thus a control programmed for 5% droop will actually only have 2.5% droop if only 37.5° of actuator rotation is used, from no load to full load. Using only 37.5° of actuator travel will require programming 10% droop for an actual 5% droop curve (a minimum of 66° of travel is recommended).

Power Up Diagnostics

The Power Up Diagnostics feature is provided to verify the proper operation of the microprocessor and memory components. The diagnostics take about ten seconds after the control is powered on. A failure of the test will turn off the output of the control. The ProAct control will not increase actuator signal from zero until diagnostics are complete.

ProAct Actuator

The ProAct actuator is a limited-angle rotational torque motor designed specifically for the control of engine fuel. The torque motor is a "run-hold" device. It responds to a fuel-position error at full speed until the position feedback causes the electronic control to change the current signal to hold position. This characteristic makes the actuator extremely fast and at the same time extremely accurate and "stiff" in engine-fuel control.

The ProAct II uses a four-pole torque motor design to provide 2.7 N·m (2.0 lb-ft) of torque (3.4 J/2.5 ft-lb work) with 6 A, 24 V input at steady state, and 5.4 N·m (4.0 lb-ft) of torque (6.8 J/5.0 ft-lb work) with 12 A, 24 V input during transient.

The actuator is equipped with internal stop springs which allow rotational overshoot of 3° in each direction. The internal spring stops are necessary to halt the rotation of rotor and load inertia without damage to the actuator. This possible over-rotation of 3° in both directions must be considered when designing linkage or connecting to the butterfly shaft.

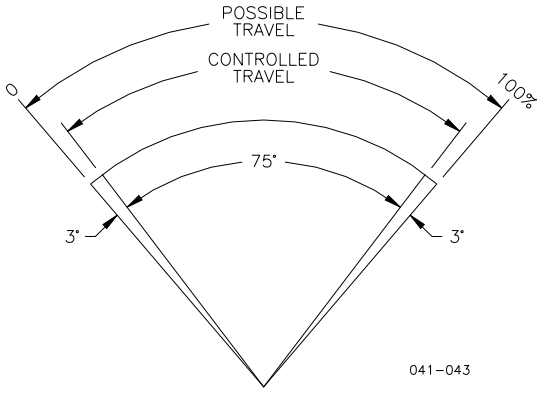

Figure 3-7. ProAct Output Travel

Katolight Service - Master Repair Manual - Page 3398

The terminal shaft on the actuator provides 0.500-36 (inch) serrations. The output shaft is connected to the butterfly valve or fuel control shaft either directly through a zero-backlash flexible coupling* or through an attached lever and linkage. Installations should attempt to use as much of the actuator rotation as possible to use as much of the actuator's work capability as possible.

*—When a flexible coupling is used, take care to assure that the maximum coupling misalignment is not exceeded and that the coupling is sized properly for the loads.

Return Spring

The ProAct actuator has an internal return spring designed to move the actuator toward minimum fuel in case the electrical control should fail, or power is removed. Spring scale may not be enough to move the engine to shutdown.



WARNING

The fuel system should be equipped with a spring return to minimum fuel capable of moving the fuel control in case of failure in the ProAct system, the connections between the ProAct actuator and the fuel control, or loss of electrical power. The return spring should be of sufficient force to return the fuel system to minimum fuel on loss of actuator control, but should not limit the actuator's ability to properly control the engine under all operating conditions.

The Feedback Device

The ProAct actuator uses a brushless, magneto-resistive position sensor. The position feedback signal to the digital control is responsible for the accurate positioning of the actuator.

ProAct 75 Actuator Selection

The actuator installed must match the system requirements. Select the actuator with either an MS connector or a conduit fitting with clockwise or counterclockwise rotation*.

*—Directions are determined by looking at the actuator shaft and the rotation to increase fuel.

Katolight Service - Master Repair Manual - Page 3399

Katolight Service - Master Repair Manual - Page 3400

Chapter 4
Installation

Unpacking

Before handling the control, read Chapter 2, Electrostatic Discharge Awareness. Be careful when unpacking the electronic control. Check the control for signs of damage such as bent panels, scratches, and loose or broken parts. If any damage is found, immediately notify the shipper.

The ProAct actuator will come in a separate carton from the control. Inspect the carton for damage. The actuator is a rugged, heavy device and shipping damage is unlikely. Particularly inspect the receptacle and terminal shaft for possible damage.

Power Requirements

The ProAct II control system requires a voltage source of 18 to 32 Vdc (24 Vdc nominal) uninterrupted power supply. Maximum power consumption is 125 W at rated voltage. The ProAct I system requires a voltage source of 8 to 32 Vdc (12 or 24 Vdc nominal). Maximum power consumption is 50 W at rated voltage.

CAUTION
To prevent damage to the control, do not exceed the input voltage range.

NOTE
If a battery is used for operating power, an alternator or other battery charging device is necessary to maintain a stable supply voltage.

CAUTION
To prevent damage to the control, make sure that the alternator or other battery-charging device is turned off or disconnected before disconnecting the battery from the control.

Katolight Service - Master Repair Manual - Page 3401

Control Box Location Considerations

Consider these requirements when selecting the mounting location for the ProAct control:

- adequate ventilation for cooling
- space for servicing and repair
- 54 inches (1.4 m) of connecting cord is provided with the Hand Held Programmer. If the location does not allow comfortable use of the programmer, an extension cord should be obtained at the time of installation. The RS-422 communications will allow a lengthy extension cord.
- protection from direct exposure to water or condensation-prone environment
- protection from high-voltage or high-current devices, or devices which produce electromagnetic interference
- avoidance of vibration
- selection of a location that will provide an operating temperature range of –40 to +70 °C (–40 to +158 °F).

The Digital Speed Control must NOT be mounted on the engine.

Actuator Installation Considerations

Thermal

The actuator is designed for installation on the engine. The actuator will generate heat, especially when stalled.

The feedback sensor located on the actuator has a maximum temperature limitation of 125 °C (257 °F). Should the actuator be shielded from air circulation, the installer must consider the heat conductivity of the installation bracket, and the operating temperature of the ultimate heat sink to which the bracket will be attached. Generally the heat transfer abilities of aluminum and low-carbon steel are better than high-carbon steel or stainless steel. Contact Woodward if operating temperature is a concern.

Output Coupling or Linkage

The actuator will provide up to 75° rotation from minimum to maximum positions. This will allow direct installation to most butterfly shafts. Special connectors that permit the installation of the actuator directly to a butterfly valve shaft are available. The coupling selected (or any linkage used) must be of zero backlash design. If a coupling is used it should be drilled and pinned, or serrated.

The bracket that mounts the actuator must be of adequate precision to assure that misalignment limits of the coupling used are not exceeded. Contact Woodward for help in selection of an approved coupling.

Katolight Service - Master Repair Manual - Page 3402

Diesel engines will generally useless rotation, often about 30 degrees. Linkage should be designed to use as much actuator rotation as possible to take advantage of the actuator's full work capability. (If only 30 degrees of actuator rotation is used, the actuator will provide only 40 percent of its work capability.)

Fuel Position Stops

Diesel installations will generally use the fuel system minimum and maximum position stops. The actuator travel should be centered within the total rotation needed from minimum to maximum fuel.

Diesel engine racks are normally designed to provide the minimum and maximum stops without binding.

Butterfly valves in carburetors will often bind if rotated too far toward minimum or maximum. For this reason, the stops in the actuator should be used at both minimum and maximum positions. Note that the stops will allow up to 3° of additional rotation in both directions during impact.

Make sure that the engine will always shut down when the actuator is at the minimum stop.

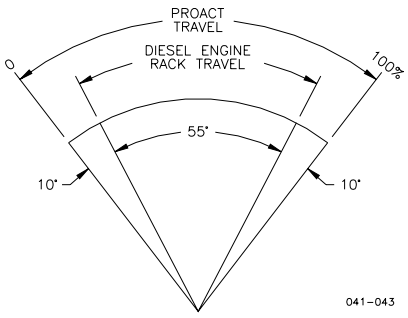

Figure 4-1. Diesel Engine Travel Stops

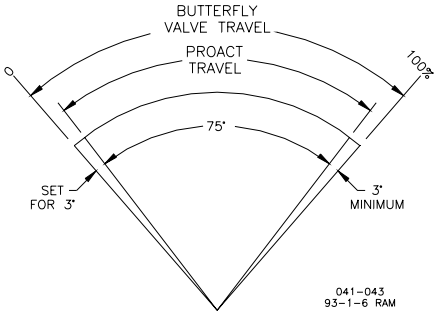

Figure 4-2. Carburetor Travel Stops

Actuator Bracket

The actuator may be installed on a bracket holding to the 2.248–2.251 inch diameter male pilot concentric to the terminal shaft or to a bracket which attaches to the base with four .312-18 screws with a minimum engagement of 16 mm (0.625 inch). The actuator may be mounted in any attitude. The actuator is weather proof and resistant to the corrosive effects of water and salt water, however pressure washing of the feedback device side of the actuator should be minimized.

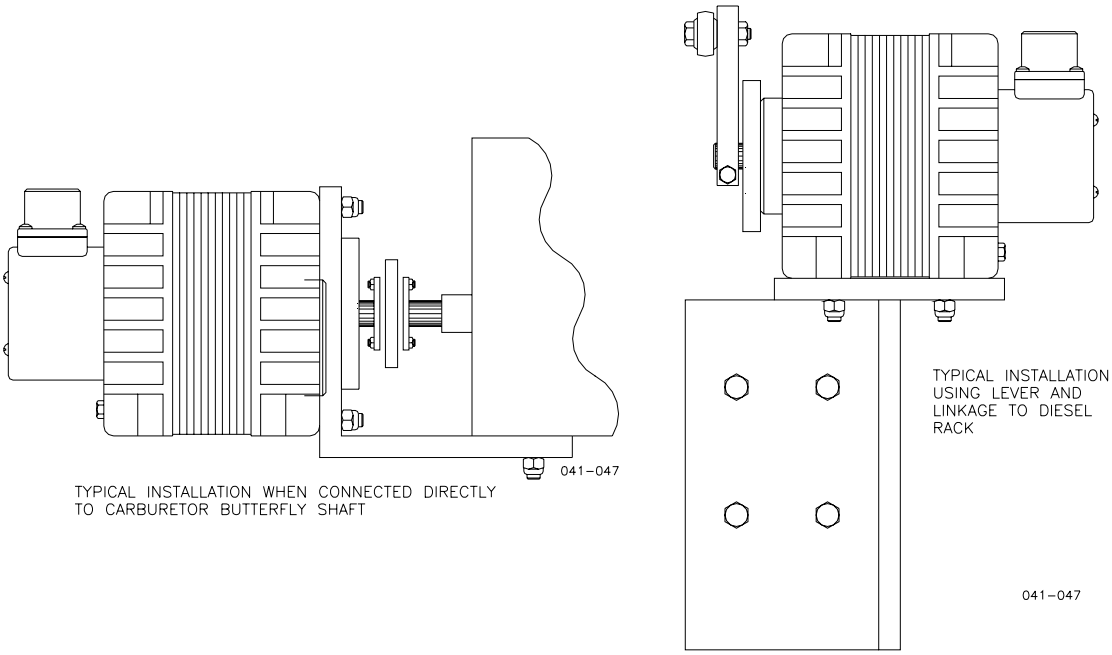

Replace the four outside through bolts with longer .250-20 bolts when mounting on a fixture locating on the pilot diameter. Torque the bolts to 7.3 to 8.5 N·m (65 to 75 lb-in).

CAUTION
The actuator will fall apart if the inner bolts are removed.

When mounting on the bottom of the actuator, torque the attaching bolts to 17 to 18 N·m (150 to 160 lb-in).

Figure 4-3. Examples of Actuator Brackets

Electrical Connections

External wiring connections and shielding requirements for a typical control installation are shown in the wiring diagram. The wiring connections are explained in the rest of this chapter.

Shielded Wiring

All shielded cable must be twisted conductor pairs. Do not attempt to tin the braided shield. All signal lines should be shielded to prevent picking up stray signals from adjacent equipment. Connect the shields to the nearest chassis ground. Wire exposed beyond the shield should be as short as possible, not exceeding 50 mm (2 inches). The other end of the shields must be left open and insulated from any other conductor. DO NOT run shielded signal wires along with other wires carrying large currents. See Woodward manual 50532, *EMI Control for Electronic Governing Systems*, for more information.

Katolight Service - Master Repair Manual - Page 3404

Where shielded cable is required, cut the cable to the desired length and prepare the cable as instructed below.

1. Strip outer insulation from BOTH ENDS, exposing the braided or spiral wrapped shield. DO NOT CUT THE SHIELD.
2. Using a sharp, pointed tool, carefully spread the strands of the shield.
3. Pull the inner conductor(s) out of the shield. If the shield is the braided type, twist it to prevent fraying.
4. Remove 6 mm (1/4 inch) of insulation from the inner conductors.

The shield must be considered as a separate circuit when wiring the system. The shield must be carried through connectors without interruption.

Installations with severe electromagnetic interference (EMI) may require additional shielding precautions. Contact Woodward for more information.

Failure to provide shielding can produce future conditions which are difficult to diagnose. Proper shielding at the time of installation is required to assure satisfactory operation of the speed control system.

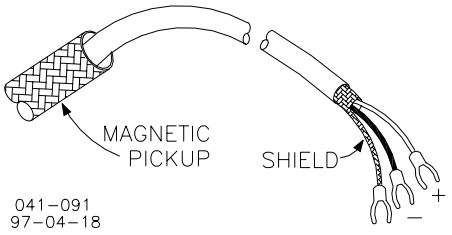

Figure 4-4. Preparing Shielded Wiring

Power Supply

The power supply output must be low impedance (for example, directly from batteries).

Run the power leads directly from the power source to the control. DO NOT POWER OTHER DEVICES WITH LEADS COMMON TO THE CONTROL. Avoid long wire lengths. Connect the positive (line) to terminal 24 and the negative (common) to terminal 25. If the power source is a battery, be sure the system includes an alternator or other battery-charging device.

Katolight Service - Master Repair Manual - Page 3405

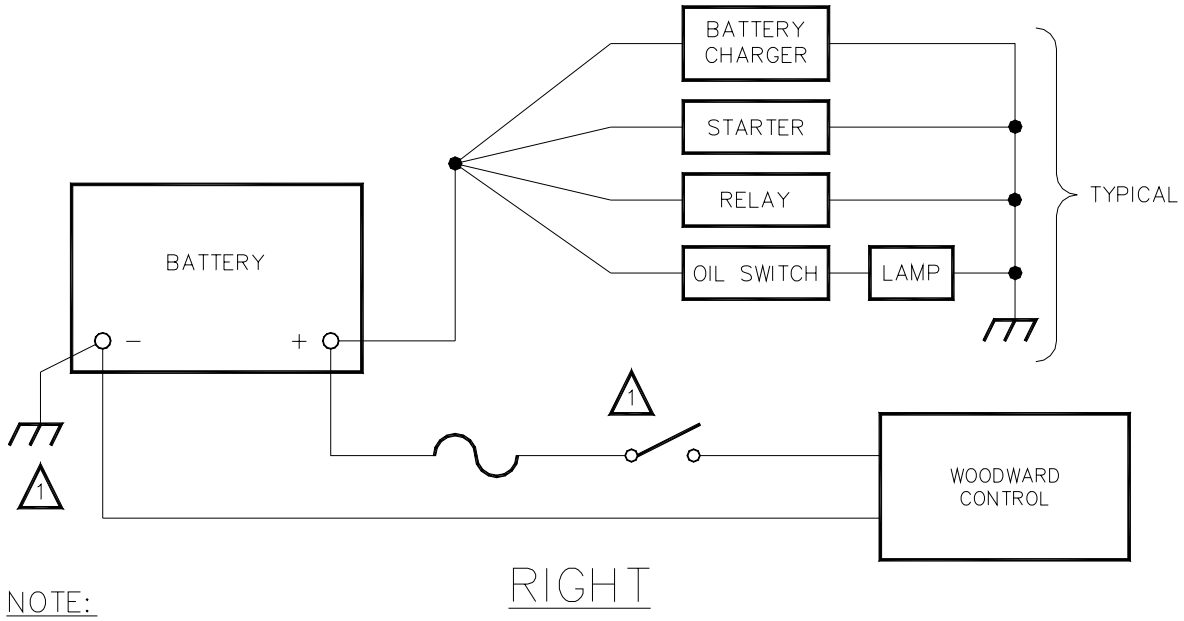

NOTE:

1 A NEGATIVE GROUND SYSTEM IS SHOWN. IF A POSITIVE GROUND SYSTEM IS USED, THE SWITCH AND FUSE MUST BE LOCATED IN SERIES WITH BATTERY (–) AND TERMINAL (TB1–2) ON THE WOODWARD CONTROL. THE POSITIVE TERMINAL BECOMES CHASSIS GROUND.

Figure 4-5. Correct Wiring to Power Supply

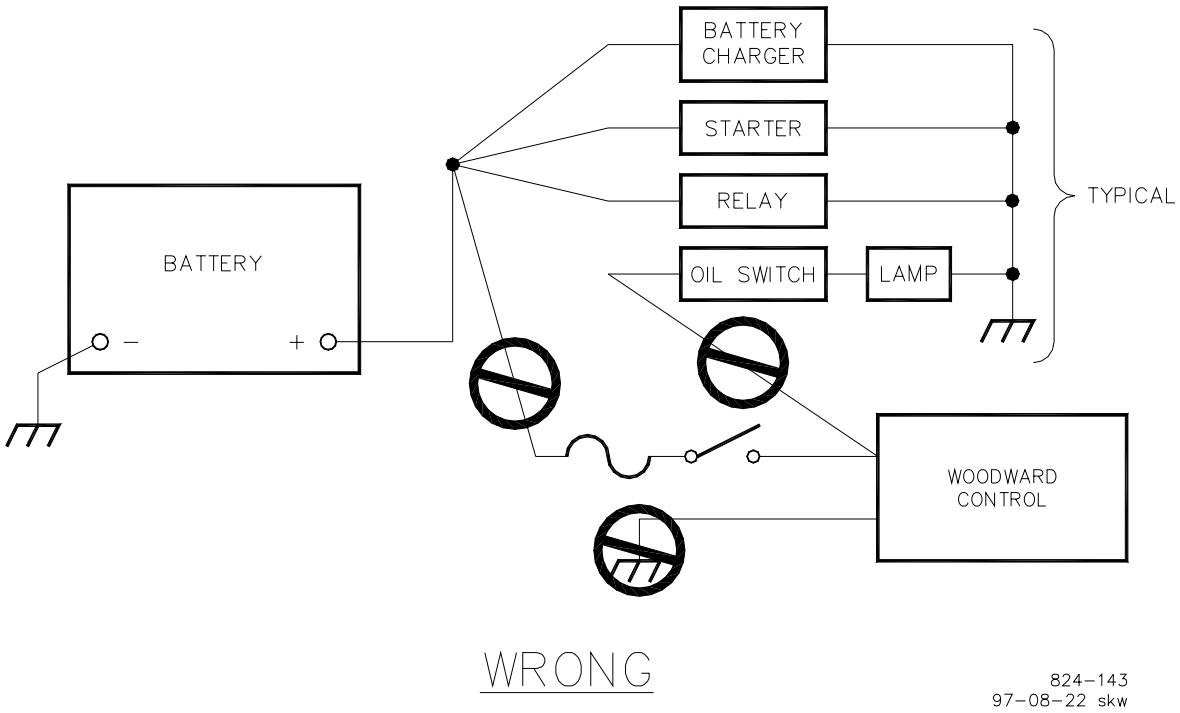

Figure 4-6. Incorrect Power Supply Wiring

Katolight Service - Master Repair Manual - Page 3406

DO NOT turn off control power as part of a normal shutdown procedure. Use the Run/Stop discrete input (terminal 23) for normal shutdown.

CAUTION
Do NOT apply power to the control at this time. Applying power may damage the control.

CAUTION
To prevent damage to the engine, apply power to the ProAct control for at least ten seconds before starting the engine. The control must have time to perform its power-up diagnostics and become operational. Do not attempt to start the engine if the diagnostic tests fail, because test failure turns off the output of the control.

CAUTION
To prevent possible damage to the control or poor control performance resulting from ground loop problems, follow the electrical connection instructions. The control common is electrically isolated from the power supply input.

Actuator and Position Feedback Wiring

The ProAct actuator will rotate in either direction. In models I and II, the actuator direction of rotation is selected by wiring in the actuator and the drift spring.

Connect the actuator wiring from the actuator to the ProAct control to terminals 1 (+) and 2 (–). Connect the actuator position feedback wires to terminals 7 (+), 8 (0), and 9 (–). Position feedback nominal voltages are approximately 3 V at minimum actuator position and 2 V at maximum actuator position.

Discrete Inputs

Discrete inputs are the switch input commands to the ProAct Digital Speed Control. The discrete inputs are usually powered by the positive power supply.

Isoch/Droop Contact

The Isoch/Droop contact (open for droop, closed for isochronous) connects to terminal 16. When terminal 16 is open, the ProAct control will operate in droop at the percentage entered in menu 3. When closed, the control will operate in isochronous.

The percent of droop entered in Menu 3 is based on 75° of actuator rotation between minimum and maximum positions. If the installation uses less than 75°, the amount of droop must be increased proportionally.

Katolight Service - Master Repair Manual - Page 3407

Idle/Rated Contact

The Idle/Rated contact (open for Idle, closed for Rated) connects to terminal 17. When the Idle/Rated contact is closed, the control immediately switches the fuel limit to the maximum limit or torque limit (whichever is less) and ramps engine speed to the rated speed set point (or the speed specified by the Remote Input when the Remote Speed Setting input at terminal 21 is enabled). When the Idle/Rated contact is opened, the control ramps engine speed to the idle speed setting.

The idle set point cannot be set above the rated set point. The fuel limiters (start, torque, and maximum) remain effective regardless of the Remote Reference input.

Lower and Raise Speed Contacts

The Lower Speed contact connects to terminal 18. Raise and Lower inputs are effective only if the control is in Rated. When the Lower Speed contact is closed, the control lowers speed at a rate determined by the Lower Rate set point. When the contact is open, speed remains at its current value. Closing the Lower Speed contact will cancel the ramps started by the Idle/Rated contact.

The Raise Speed contact connects to terminal 19. When the Raise Speed contact is closed, the control raises speed at a rate determined by the Raise Rate set point. When the contact is open, speed remains at its current value. Closing the Raise Speed contact will cancel the ramps started by the Idle/Rated contact.

Closing both Raise and Lower contacts at the same time will disable Raise and Lower speeds as long as both contacts are closed.

The Raise and Lower Speed contacts are disabled when the Remote Speed Setting mode is selected.

Alternate Dynamics

The Alternate Dynamics contact connects to terminal 20. When this contact is open, Dynamics set 1 is selected. When this contact is closed, Alternate Dynamics is selected.

Remote Reference

When Remote Reference is selected by closing the contacts to terminal 18, the Raise and Lower Speed inputs are disabled. The speed reference setting is based on the value of current in the remote speed reference input. When the contacts to terminal 21 are open and the Run/Stop switch is toggled, the Raise Speed and Lower Speed inputs are enabled. The remote speed reference is a 4–20 mA input. The remote speed reference range is tailored in menu 3.

Katolight Service - Master Repair Manual - Page 3408

A remote reference of less than 2 mA is considered failed, and the control will remain at the last speed setting. To return to rated speed, the remote switch must be open and the Run/Stop switch toggled.

Diagnostics Request

The Diagnostics Request contact connects to terminal 22 and is used during factory testing of the control. This terminal should be left open during installation.

Run/Stop Fuel Contact

The Run/Stop contact (terminal 23) is the preferred means for a normal shutdown of the engine. The control will not operate without voltage applied to terminal 23. When the contact is closed, the voltage applied to terminal 23 allows the control to move the actuator as required for operating conditions.



WARNING
The Run/Stop contact is not intended for use in any emergency stop sequence. To prevent possible serious injury from an overspeeding engine, do NOT use the Run/Stop contact as part of any emergency stop sequence.

Speed Signal Input

Connect a magnetic pickup (MPU) to terminals 10 and 11 using shielded wire. Connect the shield to the chassis only. Do not connect the shield at the MPU end. Make sure the shield has continuity the entire distance to the speed sensor, and make sure the shield is insulated from all other conducting surfaces.

We recommend that the MPU be dedicated to the control. The MPU output should be from 1 to 60 Vrms.

The Number of Gear Teeth is the number of teeth which will be exposed to the speed sensing device during one revolution of the engine. Should the sensed gear not rotate at engine speed, the number of teeth must be adjusted to reflect the proportion of engine speed to the sensed gear speed. The Number of Gear Teeth is tuned (entered) in Configuration Menu (Menu 6).



WARNING
The Number of Gear Teeth is used by the control to convert pulses from the speed-sensing device to engine rpm. To prevent possible serious injury from an overspeeding engine, make sure the control is properly programmed to convert the gear-tooth count into engine rpm. Improper conversion could cause engine overspeed.

Katolight Service - Master Repair Manual - Page 3409

Remote Speed Setting Input

Connect the 4 to 20 mA current transmitter or 1 to 5 Vdc voltage transmitter to terminals 14 (+) and 15 (–). Use a shielded, twisted-pair cable. Connect the shield to the control chassis only.

Aux Voltage Input

Connect the output of a Woodward Load Sensor (if used) to terminals 12 (+) and 13 (–). Use a shielded twisted-pair cable. Wire the remainder of the load sensor in accordance with the wiring diagram for the sensor used.

Control Outputs

Actuator Control

The actuator is connected to terminals 1 (+) and 2 (-). The polarity of this connection must be correct if the actuator is to respond in the desired rotational direction. The actuator cannot be reversed by changing the polarity because of the factory-installed return spring. Use 4 mm² (12 AWG) wire to the actuator. The total length of the pairs of wires between the actuator and the control and between the battery and the control should not exceed 23 m (75 ft).

Speed Switches

Terminals 3, 4, and 5 provide the outputs from speed switches A, B, and C. These outputs close a circuit to the power supply (+). The speed switches are rated to 500 mA. The output will operate a signal lamp directly, or may be connected to an intermediate relay to conduct heavier switch operations. The switch is a low side switch which connects the device attached to the switch to ground.

The switches are configured in Menu 3 and operate as shown in Figure 4-7.

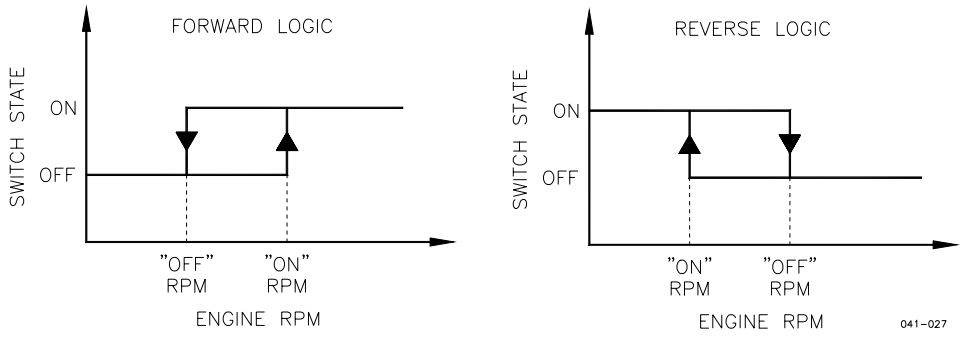

Figure 4-7. Speed Switch Operation

Katolight Service - Master Repair Manual - Page 3410

Fault Lamp

Terminal 6 provides the output for the fault lamp indicator. This output closes a circuit to the power supply (+) and is rated for 500 mA to indicate a fault. The output will operate a signal lamp directly, or may be connected to an intermediate relay to conduct heavier switch operations. The faults indicated are actuator position feedback out of range (0.5 Vdc < Vposition < 4.5Vdc), actuator driver circuit open, or actuator overcurrent.

Actuator Position Feedback

Shielded wire must be connected to the Actuator Position Feedback terminals 7, 8, and 9. The shield must be continuous and grounded at the control end only to prevent interference with the position feedback signal.

Installation Checkout Procedure

With the installation complete as described in this chapter, do the following check out procedure before beginning the start-up adjustments in Chapter 5.

1. Visual inspection

A. Check the linkage or coupling between the actuator and fuel metering device for looseness or binding.

B. Check for correct wiring in accordance with the wiring diagram (Figure 1-5).

C. Check for broken terminals and loose terminal screws.

D. Check the speed sensor for visible damage. If the sensor is a magnetic pickup, check the clearance between the gear and the sensor, and adjust if necessary. Clearance should be between 0.25 and 1.25 mm (0.010 and 0.050 inch) at the closest point. Make sure the gear runout does not exceed the pickup clearance.

2. Check for grounds

   Check for grounds by measuring the resistance from all control terminals to chassis. All terminals except terminals 9, 11, and 25, should measure infinite resistance (the resistance of terminals 9 and 11 depends on whether a floating or grounded power source is used). If a resistance less than infinite is obtained, remove the connections from each terminal one at a time until the resistance is infinite. Check the line that was removed last to locate the fault.

3. Stroking the actuator

Katolight Service - Master Repair Manual - Page 3411

The actuator may be stroked electronically using the failsafe override in Menu 6 and the start fuel limiter in Menu 4.

NOTE
Do not crank or attempt to start the engine during this procedure.

A. Verify the Run/Stop contact is open or in the stop mode.

B. Set the Start Fuel Limiter (Menu 4) to 50% to 90%.

C. Go to Menu 6 and enter Configuration Key (49). Step down to the Failsafe function and disable it.

D. Close the Run/Stop contact to run mode.

E. Go to Start Fuel Limiter (Menu 4) and move the set point up or down. Verify the actuator follows.

F. Open the Run/Stop contact. Verify the actuator goes to the minimum fuel position (forward acting).

4. Chassis Ground

   Check for resistance from chassis to earth ground. The resistance should be zero. If earth ground is not available, tie the chassis to system ground, battery positive or negative.

5. Go to Menu 6, enter Configuration Key (49), and enable the Failsafe switch.

WARNING
To prevent possible serious injury from an overspeeding engine, it is important to have the Failsafe switch enabled prior to cranking the engine.

Katolight Service - Master Repair Manual - Page 3412

Chapter 5
Operation and Adjustment

Introduction

Because of the variety of installations, plus system and component tolerances, the control must be tuned to each system for optimum performance.

This chapter contains information on control calibration. It includes initial prestart-up and start-up settings and adjustments.

WARNING
An improperly calibrated control could cause an engine overspeed or other damage to the engine. To prevent possible serious injury from an overspeeding engine, read this entire procedure before starting the engine.

Using the Hand Held Programmer

The Hand Held Programmer (Figure 5-1) is a hand-held terminal, powered by the ProAct™ Digital Speed Control. The terminal connects to the RS-422 D connector port on the control. Firmly seat the connector on the terminal into J1. Control boxes are equipped with a cover which must be removed to access the J1 receptacle and the two other terminal strips.

When power is applied to the terminal by plugging it into the control, it performs a power-up self-test. Upon successful completion of the self-test, the screen will remain blank. Press the ID key to display the part number and revision level of the software in the control. Refer to this number and revision level in any correspondence with Woodward.

The programmer screen is a four line, back-lighted LCD display. The display permits the user to look at two separate functions or menu items at the same time. Use the “up/down arrow” key to toggle between the two displayed items. The first letter of the active menu will blink.

Changes recorded in the menus may be lost should the ProAct control be powered down. Push the SAVE key to permanently record changes before leaving a menu.

Katolight Service - Master Repair Manual - Page 3413

Only the keys listed above are used. Other keys are not used.

Key	Function
left arrow	Steps backward through the selected menu.
right arrow	Steps forward through the selected menu.
up/down arrow	Toggles between the upper two-line menu display and the lower two-line menu display.
up arrow	NOT USED.
down arrow	NOT USED.
turtle up	Increases the displayed set point slowly.
turtle down	Decreases the displayed set point slowly.
rabbit up	Increases the displayed set point rapidly.
rabbit down	Decreases the displayed set point rapidly.
1,2,3,4,5,6,0	Accesses Menus 1, 2, 3, 4, 5, 6, or 0. (Number keys are NOT used to change displayed values.)
7,8,9	NOT USED.
–	Removes an inactive menu from the display screen. (This is the only function of the minus key.)
+	NOT USED.
black square	Clears the error log from the programmer.
ID	Displays the software part number and revision. Use this information when contacting Woodward or an authorized service facility.
=	NOT USED.
•	NOT USED.
ESC	NOT USED.
SAVE	Permanently saves changes made to a menu. Changes are NOT saved until the SAVE key is pressed. If the control is powered off before pressing SAVE, the entries will revert back to their previously saved values.
BKSP	NOT USED.
SPACE	NOT USED.
ENTER	NOT USED.

Katolight Service - Master Repair Manual - Page 3414

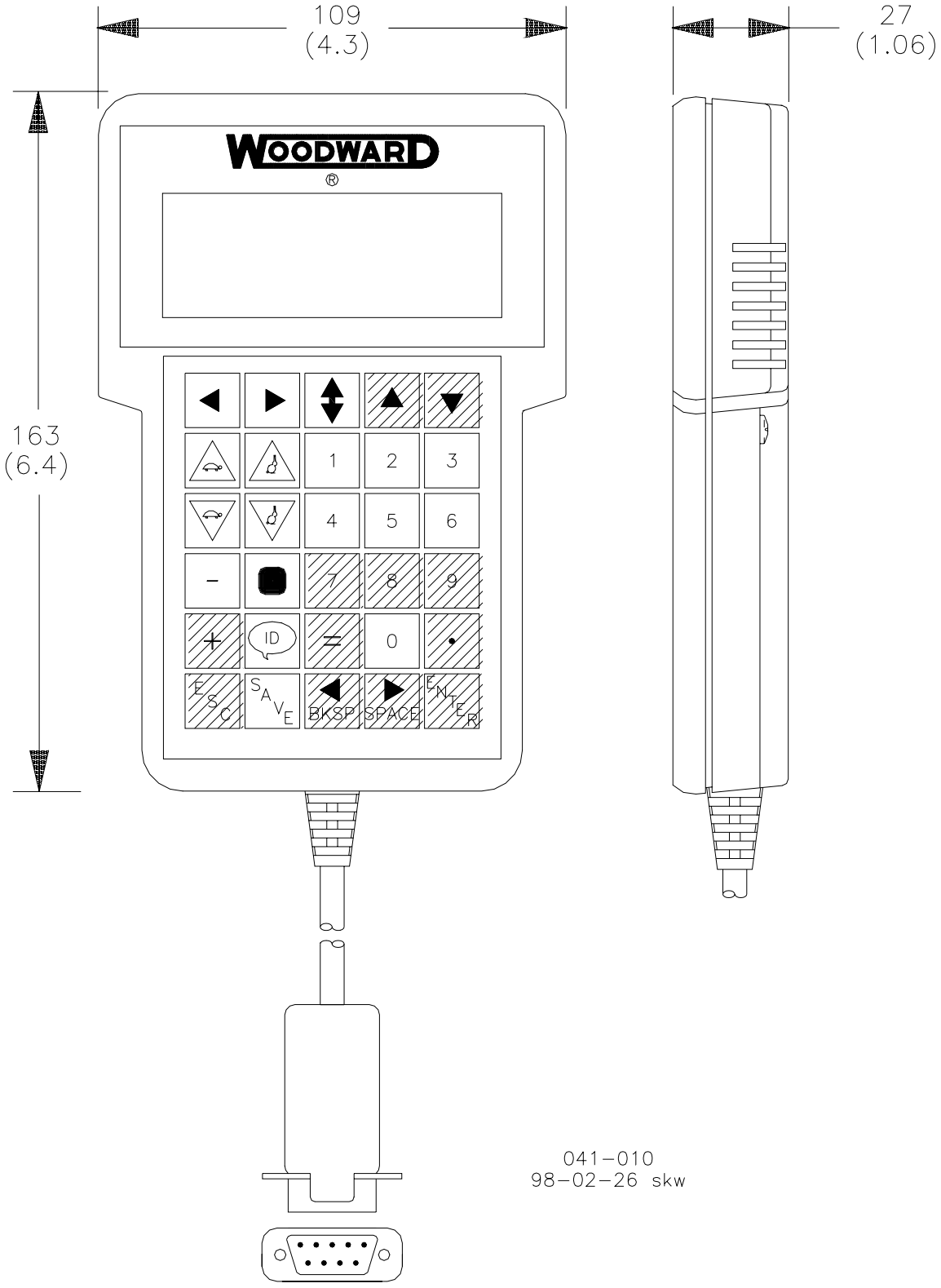

The Programmer comes with a 54 inch long connecting cable and a “D” connector.

Figure 5-1. Hand Held Programmer (9907-205)

Katolight Service - Master Repair Manual - Page 3415

ProAct Control Menus

Menu 1—Dynamics Settings

Menu Item	Low Value	Default Value	High Value	Units
Gain A	0.0003	0.25	10.00	NA
Gain A BP	0.00	0	100.00	%
Gain B	0.0003	0.25	10.00	NA
Gain B BP	0.00	30	100.00	%
Gain C	0.0003	0.25	10.00	NA
Gain C BP	0.00	60	100.00	%
Gain D	0.0003	0.25	10.00	NA
Gain D BP	0.00	100	100.00	%
Stability	0.00	0.25	10.00	seconds
Compensation	0.00	0.10	10.00	seconds
Gain Ratio	1.00	1.00	50.00	NA
Window Width	0.00	60	2000.00	rpm

Menu 2—Alternate Dynamics Settings

Menu Item	Low Value	Default Value	High Value	Units
Alt Gain A	0.0003	0.10	10.00	NA
Alt Gain A BP	0.00	0	100.00	%
Alt Gain B	0.0003	0.10	10.00	NA
Alt Gain B BP	0.00	30	100.00	%
Alt Gain C	0.0003	0.10	10.00	NA
Alt Gain C BP	0.00	60	100.00	%
Alt Gain D	0.0003	0.10	10.00	NA
Alt Gain D BP	0.00	100	100.00	%
Alt Stability	0.00	1.0	10.00	seconds
Alt Compensation	0.00	0.20	10.00	seconds
Alt Gain Ratio	1.00	1	50.00	NA
Alt Window Width	0.00	60	2000.00	rpm

Katolight Service - Master Repair Manual - Page 3416

Menu 3—Speed Reference Settings

Menu Item	Low Value	Default Value	High Value	Units
Rated Speed	0	1800	2100	rpm
Idle Speed	0	1200	2100	rpm
Raise Limit	0	1890	2100	rpm
Lower Limit	0	1200	2100	rpm
Accel Time	0	8	500	seconds
Decel Time	0	8	500	seconds
Raise Rate	0	2500	9999	rpm/minute
Lower Rate	0	2500	9999	rpm/minute
20 mA Remote Ref.	0	1890	2100	rpm
4 mA Remote Ref.	0	1710	2100	rpm
Droop	0	5%	100	%
Idle Droop	0	0	100	%
Idle Droop BP	0	0	100	%
Speed Switch A On	0	600	2100	rpm
Speed Switch A Off	0	540	2100	rpm
Speed Switch B On	0	1200	2100	rpm
Speed Switch B Off	0	1140	2100	rpm
Speed Switch C On	0	2000	2100	rpm
Speed Switch C Off	0	1900	2100	rpm

Menu 4—Limiter Settings

Menu Item	Low Value	Default Value	High Value	Units
Max Fuel Limit	0	100	100	%
Transient Over Fuel	0	0	100	%
Transient Time	0	0	10	seconds
Start Fuel Limit	0	40	100	%
Start Ramp Rate	0	1	20	%/second
Start Speed	0	400	1200	rpm
Min Torque Limit	0	50	100	%
Torque Limit BP	0	1500	2100	rpm
Torque Limit at BP	0	70	100	%
Max Torque Limit	0	90	100	%

Katolight Service - Master Repair Manual - Page 3417

Menu 5—Monitor Menu

Speed	rpm
Speed Reference	rpm
Actuator Output	%
Aux Input	volts
Remote Input	mA
Run/Stop Switch	Open/Closed
Idle Rated Switch	Open/Closed
Raise Switch	Open/Closed
Lower Switch	Open/Closed
Alternate Dynamics Switch	Open/Closed
Remote Reference Switch	Open/Closed
Isoch Switch	Open/Closed
Diagnostic Switch	Open/Closed
Speed Switch A	On/Off
Speed Switch B	On/Off
Speed Switch C	On/Off
Fault Lamp	On/Off

Menu 6—Configuration Set Points

Menu Item	Low Value	Default Value	High Value	Units
*Configuration Key	0	0	100	NA*
Number of Gear Teeth	4	60	500	NA
Dynamics Map	Linear	Linear	Nonlinear	NA
Failsafe Function	Disabled	Enabled	Enabled	NA

***—Must be set at "49" before any changes can be made. Engine must be at 0 rpm and the Run/Stop at OPEN to make any changes in this menu.**



WARNING

The Failsafe Function must be enabled during normal engine operation to prevent possible overspeed should the MPU signal be lost for any reason. As soon as the control senses engine speed, the failsafe becomes enabled. The function can be overridden to allow some slow cranking engines to start, and to test parts of the governor system without running the engine. Failure to enable the Failsafe Function could allow overspeed with resulting damage to equipment and possible personal injury or death.

Menu 0—Error Menu

Menu Item	Default	Units
Active Errors	None	N/A
Logged Errors	None	N/A
Self Test Result	49*	N/A

***—The correct result is 49. Contact Woodward if the result is not 49.**

Katolight Service - Master Repair Manual - Page 3418

Configuration, Menu 6, may be viewed at anytime. However, the engine must be shut down and the entry code must be increased from "0" to "49" before changes can be made to Menu 6.

CAUTION
To prevent possible damage to the engine resulting from improper control settings, make sure you SAVE the set points before removing power from the control. Failure to SAVE the set points before removing power from the control causes them to revert to the previously saved settings.

Description of Menu Set Points

Menu 1—Dynamics Settings

The four Gain set points and break points determine the actuator response to a change in speed or load. These settings can vary as a percent of existing load in nonlinear fuel systems. The adjustments are settings that affect the stability and transient performance of the engine. A large number will provide a faster response to an error between actual speed and reference speed. A small number will provide a slower response to an observed error in speed.

Gain becomes an important portion of the programming that determines the response and stability of an engine.

The control provides two sets of dynamics. Menu 1 sets the primary (normal) dynamics. Menu 2 provides a second set of dynamics for use with an alternate fuel or other conditions which require different control factors.

The set of dynamics being used is selected by the Alternate Dynamics contact input (open for normal dynamics and closed for alternate dynamics).

The following descriptions apply to either set of dynamics. See Figures 5-1 through 5-4.

The four Gain and Gain Breakpoint settings in Menus 1 and 2 provide different response scales to changes in load or speed depending on the existing actuator position. This allows the ProAct control to be programmed to provide a response scale that matches the engine response over the no load to full load range.

Katolight Service - Master Repair Manual - Page 3419

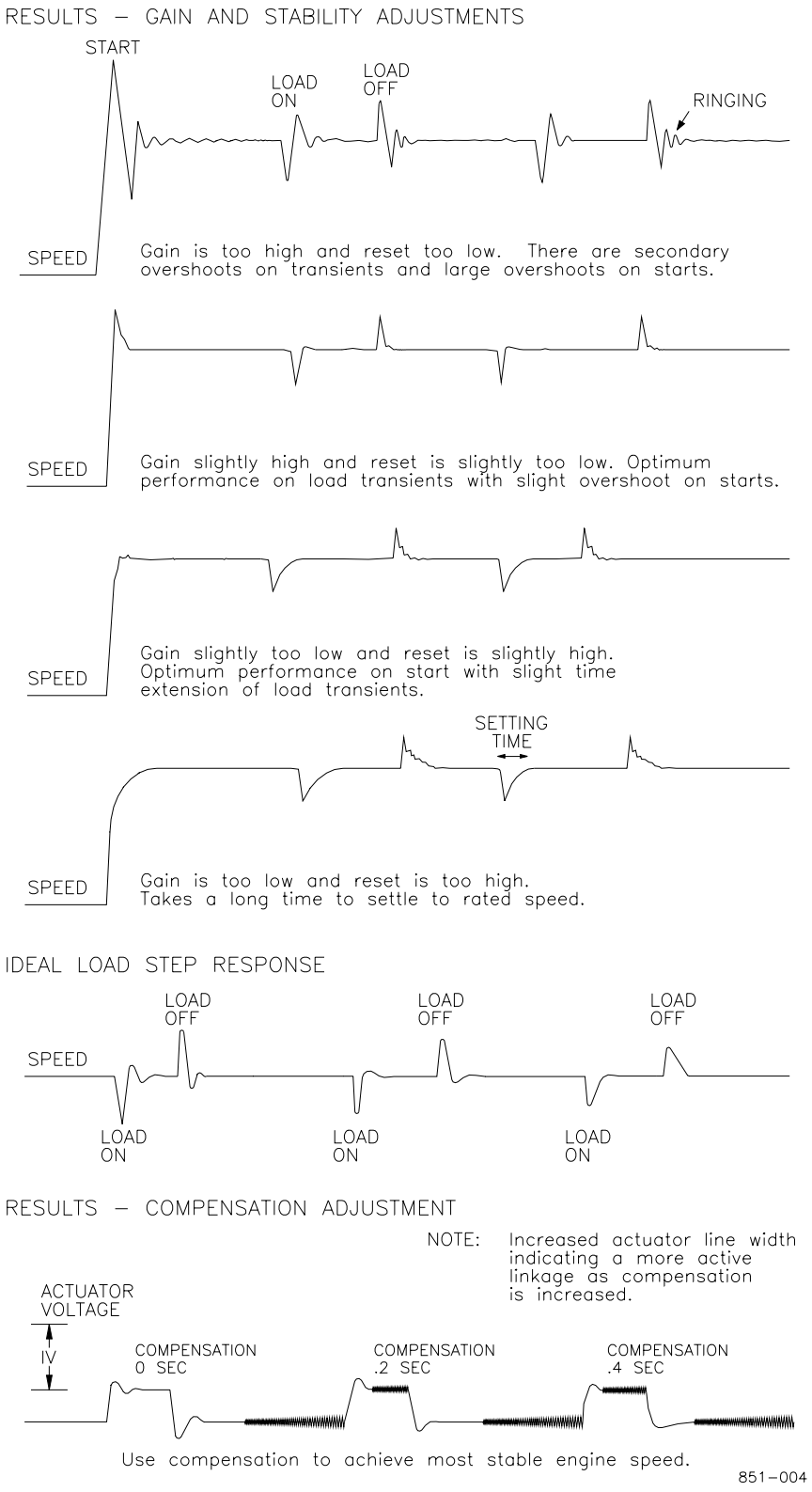

Figure 5-2. Typical Transient Response Curves

Katolight Service - Master Repair Manual - Page 3420

Gas Engine Setup

Change in the butterfly valve position is not linear in comparison to engine power output. In naturally-aspirated (non-turbocharged) engines, the position of the valve in comparison to engine output appears on a chart similar to Figure 5-2.

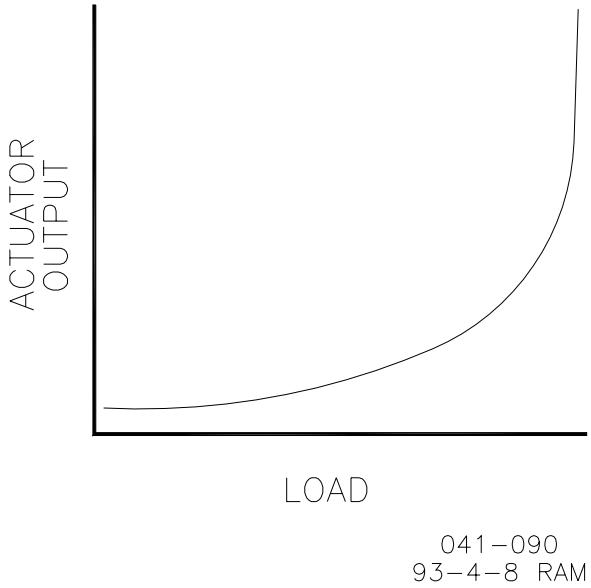

Figure 5-3. Non-linear Valve Power Curve

Turbocharged engines distort this curve, particularly as turbo pressure builds to the point of operating the waste gate. A turbocharged gas engine will likely have a butterfly position chart similar to Figure 5-4.

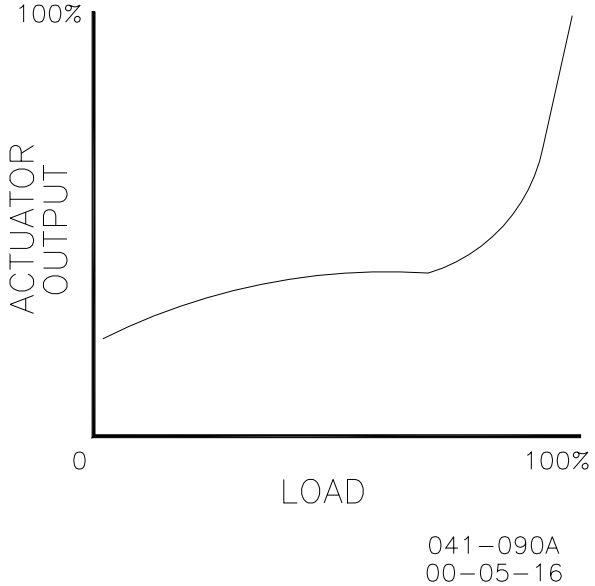

Figure 5-4. Sample Engine Plot

Note in both charts that valve position falls on a curve. The ProAct menu does not permit the construction of a curve. However, with four slope segments available, a rough approximation of the curve can be created (see Figure 5-5).

Katolight Service - Master Repair Manual - Page 3421

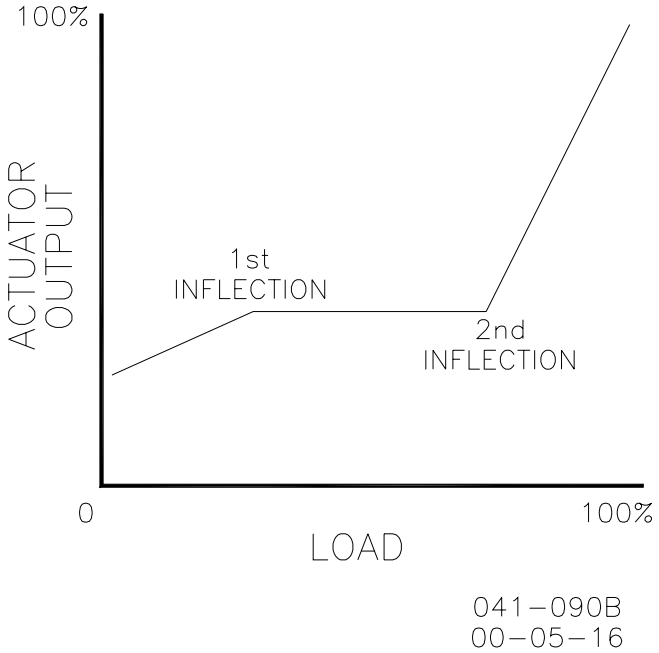

Figure 5-5. Linearized Engine Plot

Diesel Engine Setup

Most Diesel engine fuel controls are nearly linear. The dynamics maps may still be used to accommodate nonlinear conditions caused either by the fuel system or by linkage between the actuator and the rack. For gain settings that are not used, set the associated Breakpoint at 100%.

Control Gain Programming Steps

1. Gain programming is needed whenever the gain of the engine and fuel system is non-linear. This usually occurs in gas engine applications. A plot of the fuel system must be determined to properly adjust the gain of the control to match the gain of the system at all loads.

   The plot reflects the actuator output, as seen in Menu 5, versus the engine load as load is varied from no load to full load.

To construct a gain plot:

a. Set the Gain A breakpoint for 100%. This ensures that there won't be any confusion with other settings while plotting the system characteristics. Only Gain A, Stability, and Actuator Compensation will be used.

b. Start the engine and obtain good control at no load using Gain A, Stability, and Actuator Compensation. Record these settings and the actuator output as displayed in Menu 5.

Katolight Service - Master Repair Manual - Page 3422

c. Step load the engine with as many load steps as are practical. At each load step, Gain A may need to be varied to maintain engine stability. Do not change stability or actuator compensation after the first setting in step b. Should it be necessary to change these settings to obtain good control, repeat all previous steps until only Gain is changed at each load step. At each load step, record the actuator output that is displayed in Menu 5. Also record the engine load and Gain A at each point.

   The table on the next page aids in collecting the data for the Gain Plot.

   Gain settings reflect the amount of slope as shown in Figure 5-4. Flat portions of the engine plot will require relatively small amounts of gain, steep portions of the plot will require larger gain numbers.

d. Create a plot of the system by plotting actuator output as a function of load. A typical result is shown in Figure 5-4.

The following table may help in the construction of the plot. Use as many load steps as possible.

Load Step	Gain (for good control)	Actuator Output
Load Step 1		
Load Step 2		
Load Step 3		
Load Step 4		
Load Step 5		
Load Step 6		
Load Step 7		
Load Step 8		
Load Step 9		
Load Step 10		
Load Step 11		
Load Step 12		
Load Step 13		
Load Step 14		
Load Step 15		
Load Step 16		
Load Step 17		
Load Step 18		
Load Step 19		
Load Step 20		

Katolight Service - Master Repair Manual - Page 3423

2. Set Gain A to the value recorded in Step 1b. This should give good control at no load.

3. Use the plot of the engine to determine the linearity of the fuel system. This curve should be linearized between inflection points as shown in Figure 5-5.

4. Set the Gain A Breakpoint for the actuator output at or slightly below the value at the first inflection point. The gain of the electronics is constant for actuator outputs less than the Gain A Breakpoint.

5. Set the Gain B Breakpoint at the point slightly above the first inflection point in the actuator output versus load plot.

6. Gain B should now be adjusted to obtain good control at the inflection point. Note: you may already have obtained the correct value in Step 1c.

7. Set the Gain C Breakpoint slightly below the next inflection point in the curve obtained in 1d.

8. Gain C should now be adjusted to obtain best control at this point. Note: the correct value for Gain C may already have been obtained in Step 1c for this load.

9. Gain D breakpoint is normally higher than the second inflection point. The gain of the control is constant after this point.

10. Gain D is adjusted for the best response at full load. This value may also have been determined in Step 1c.

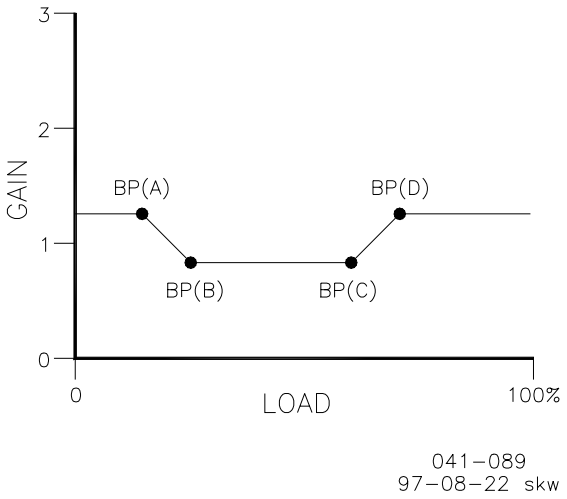

Figure 5-6. Example of Plot Created from GAIN Column

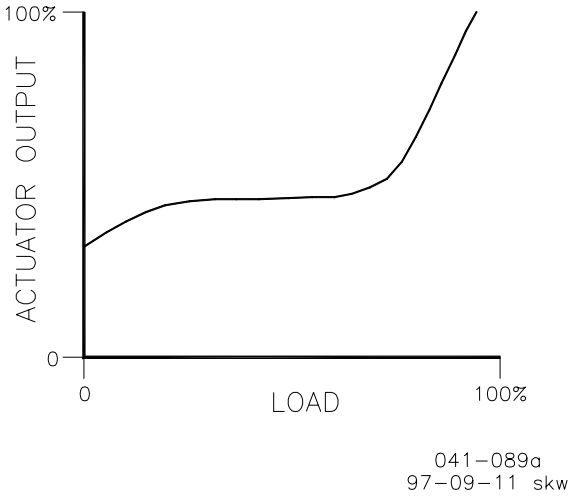

Figure 5-7. Example of Plot Created from ACTUATOR OUTPUT Column

Katolight Service - Master Repair Manual - Page 3424

Stability, Actuator Compensation, Gain Ratio, Window Width

11. Stability (also known as Reset) compensates for the lag time of the engine. It adjusts the time required for the control to return the speed to zero error after a disturbance. Stability is adjusted to prevent slow hunting and to minimize speed overshoot after a load disturbance.

12. Compensation compensates for the actuator and fuel system time constant.

13. Gain Ratio operates in conjunction with the Window Width and Gain adjustments by multiplying the Gain set point by the Gain Ratio when the speed error is greater than the Window Width. This makes the control dynamics fast enough to minimize engine speed overshoot on start-up and to reduce the magnitude of speed error when loads are changing. This allows a lower gain at steady state for better stability and reduced steady-state actuator movement.

14. Window Width is the magnitude (in ± rpm) of a speed error at which the control automatically switches to fast response. The control does not use the absolute value of speed error, but an "anticipated" speed error, to make this switch. This method provides for quick switching to the high gain value when an off speed occurs, and early switching to the low gain value when recovering from the speed transient. This provides smoother switching than if the absolute speed error were used for the window.

Menu 2—Alternate Dynamics Settings

Menu 2 should be programmed similar to Menu 1, but with the alternate fuel or other operating condition expected. The four Gain settings and breakpoints may be set like those used in Menu 1. The Stability, Compensation, Gain Ratio, and Gain Window will probably be quite different if different fuels are being used.

If the engine will not use the alternate operating condition, the menu will not have to be programmed or it can be programmed identically with the Menu 1 to prevent unintentional changes in the dynamics program.

Katolight Service - Master Repair Manual - Page 3425

Load Step	Gain (for good control)	Actuator Output
Load Step 1		
Load Step 2		
Load Step 3		
Load Step 4		
Load Step 5		
Load Step 6		
Load Step 7		
Load Step 8		
Load Step 9		
Load Step 10		
Load Step 11		
Load Step 12		
Load Step 13		
Load Step 14		
Load Step 15		
Load Step 16		
Load Step 17		
Load Step 18		
Load Step 19		
Load Step 20		

Menu 3—Speed Reference Settings

Speed adjustments are the settings that affect the speed reference. Descriptions of each menu item follow.

1. Rated Speed Reference sets the normal operating speed of the engine in rpm.

2. Idle Speed Reference sets the speed in rpm at which the engine is operated at start-up. It sometimes is used during cool down.

3. Raise Limit is the maximum speed reference setting in rpm. It is used to limit the Raise Speed command and Remote Reference to a maximum. It normally is set at the maximum rated engine speed.

Katolight Service - Master Repair Manual - Page 3426

4. Lower Limit is the minimum speed reference setting in rpm. It is used to limit the Lower Speed command and Remote Reference. It normally is set at the minimum operating speed of the engine.

5. Accel Time is the time required for the control to ramp the engine speed from idle speed to rated speed. The time is set from 0 to 500 seconds. The ramp is started whenever the Idle/Rated switch is closed.

6. Decel Time is the time required for the control to ramp the engine speed from rated speed to idle speed. The time is set from 0 to 500 seconds. The ramp is started whenever the Idle/Rated switch is opened.

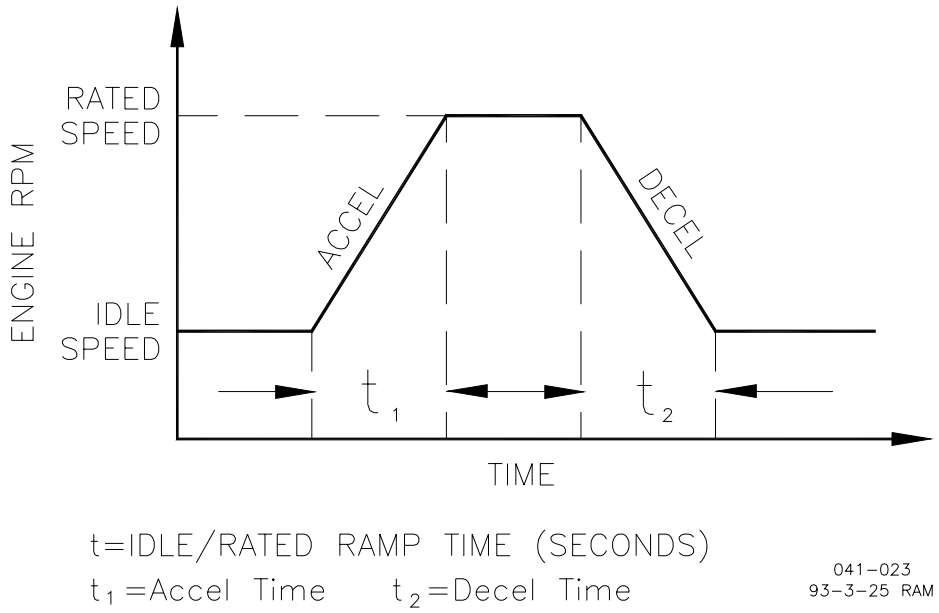

Figure 5-8. Accel/Decel Example

NOTE

Actual engine deceleration may be slower than set by the Decel Time set point. This occurs when the Decel Time set point is faster than system inertias will allow the engine to slow down in speed. This condition is indicated by the control actuator output going to the minimum fuel position. See Idle Droop below.

7. Raise Rate is the rate at which the speed reference is ramped when using the Raise command or when the Remote Speed Setting input is changed in the increase direction. The rate programmed is in rpm per minute. A step change in the remote input does not cause an immediate change in the reference, which is ramped to the new setting at the Raise Rate.

8. Lower Rate is the rate at which the speed reference is ramped when using the Lower Speed command or when the Remote Speed Setting input is changed in the decrease direction. The rate is set in rpm per minute. A step change in the remote input does not cause an immediate change in the reference, which is ramped to the new setting at the Lower Rate.

Katolight Service - Master Repair Manual - Page 3427

9. 20 mA Remote Reference is the engine speed desired when 20 mA is applied to the Remote Speed Reference input. The desired speed is set in rpm.

10. 4 mA Remote Reference is the engine speed desired when 4 mA is applied to the Remote Speed Reference input. The desired speed is set in rpm.

11. Droop is set as the percent rated speed will be decreased from no load to full load. Droop will be included in the engine control schedule only when the Isoch/Droop contact is open.

    The percentage of Droop entered is based on 75° of actuator travel. If less than full travel is used, the droop percentage must be increased proportionally.

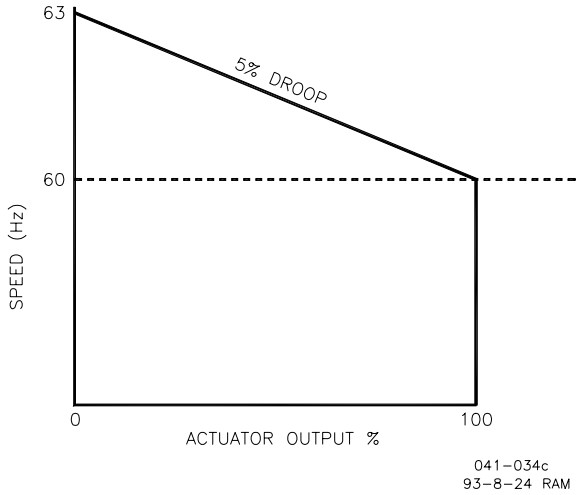

Figure 5-9. Droop Curve

12. Idle Droop combined with the Idle Droop Breakpoint is used to limit speed undershoot when large decel rates are used from rated to idle.

    Idle Droop is based on the actuator output when it drops below the Idle Breakpoint setting. Dependencies on linkage make the Idle Droop percentage relative, so large droop settings may be required to achieve the desired results.

13. Idle Droop Breakpoint is normally set equal to the actuator output obtained when the engine is unloaded and at low idle. When the output of the control drops below this setting or goes to minimum fuel during rapid engine deceleration, Idle Droop will raise the speed reference. This brings the engine back under control sooner and reduces speed undershoot. Speed undershoot may occur because the time required for the control to return to the new fuel setting is dependent on control dynamics and linkage adjustment.

14. Speed Switch A ON sets the rpm that will turn on Speed Switch A.

Katolight Service - Master Repair Manual - Page 3428

15. Speed Switch A OFF sets the rpm that will turn off Speed Switch A.

16. Speed Switch B ON sets the rpm that will turn on Speed Switch B.

17. Speed Switch B OFF sets the rpm that will turn off Speed Switch B.

18. Speed Switch C ON sets the rpm that will turn on Speed Switch C.

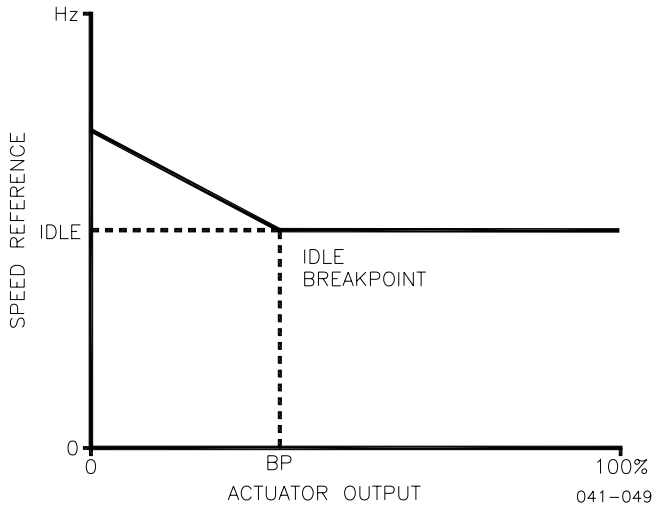

Figure 5-10. Idle Droop

19. Speed Switch C OFF sets the rpm that will turn off Speed Switch C.

    The speed switch changes state at the selected speed position. Each switch allows 500 mA to sink to the negative of the power supply when closed.

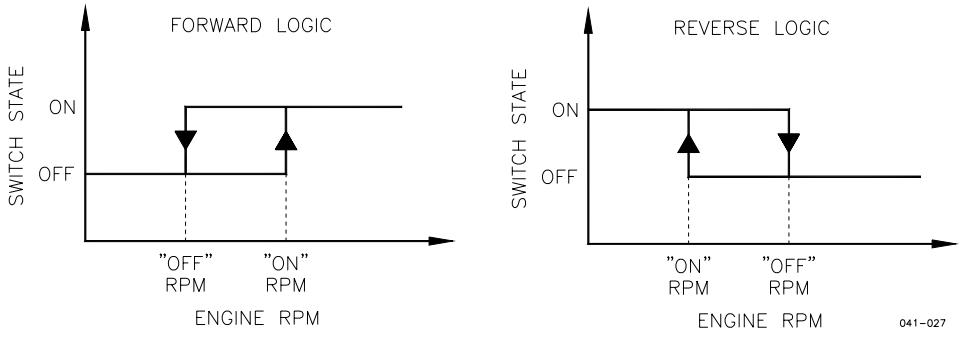

Figure 5-11. Speed Switch Settings

Katolight Service - Master Repair Manual - Page 3429

Menu 4—Limiter Settings

Fuel limiters limit the actuator output from the control. Descriptions of each menu item follow.

1. Maximum Fuel Limit sets the maximum percent actuator output when rated speed is selected. If the actuator linkage is correctly set so the actuator is providing the maximum position stop, 3° in advance of the butterfly valve maximum position, this item may be set at 100%. If the actuator must reach maximum before it reaches its maximum stop, the entry must be below 100%.



CAUTION
Damage to the butterfly valve and possible jamming of the valve in the wide open position is possible if linkage is not designed to reach maximum actuator position at least 3° in advance of maximum butterfly valve position.

   The Maximum limit may be used to limit the horsepower developed in the engine.

2. Transient Limit is used when the maximum fuel limit is controlling the output horsepower of the engine. The transient limit allows overfueling of the engine by the amount tuned into the control. This allows the engine to accelerate to the rated load.

3. Transient Time is the amount of time that the Transient Limit is allowed to operate.

4. Start Fuel Limit is a limit that is in place while the engine is starting. This limit helps reduce smoke on diesel engines and prevents overfueling during the start of gas engines. The limit is removed when the engine reaches Start Speed.

5. Start Ramp is a tunable ramp of the actuator output to ensure starting of cold engines. The control ramps the position of the actuator from the Start Fuel Limit open at a controlled rate until the engine starts. After the engine has started, the fuel limits will be set by the Maximum Fuel Limit or the Torque Limit, whichever is less.

6. Start Speed sets the speed in rpm that will remove the start-fuel limit from the control system. When Start Speed is obtained, the speed ramps to idle or rated speed, depending on the selection made. After start speed is attained, the control uses the Maximum Fuel and Torque limits.

7. Minimum Torque Limit is the percent actuator output allowed when the engine speed is at or below the Lower Limit speed setting (Menu 3). The torque limiter provides a value between Minimum Torque Limit and Breakpoint Torque Limit when engine speed is between these two settings. This sets the torque limit slope below the Breakpoint position.

Katolight Service - Master Repair Manual - Page 3430

8. Torque Limit Breakpoint (BP) is the engine speed at which the slope of the torque limiter output changes. The Torque Limit Breakpoint must be set between the Raise and Lower Limits described under Menu 3.

9. (BP) Torque Limit at Breakpoint (BP) is the percent actuator output at the engine speed set by the Torque Limit Breakpoint described above.

10. Maximum Torque Limit is the maximum percent actuator output when the engine speed is at the Raise Limit speed setting. The torque limiter provides a value between the Breakpoint Torque Limit and Maximum Torque Limit when engine speed is between these two settings. This sets the slope above the torque limit breakpoint setting.

Figure 5-12 illustrates the breakpoint and these adjustments.

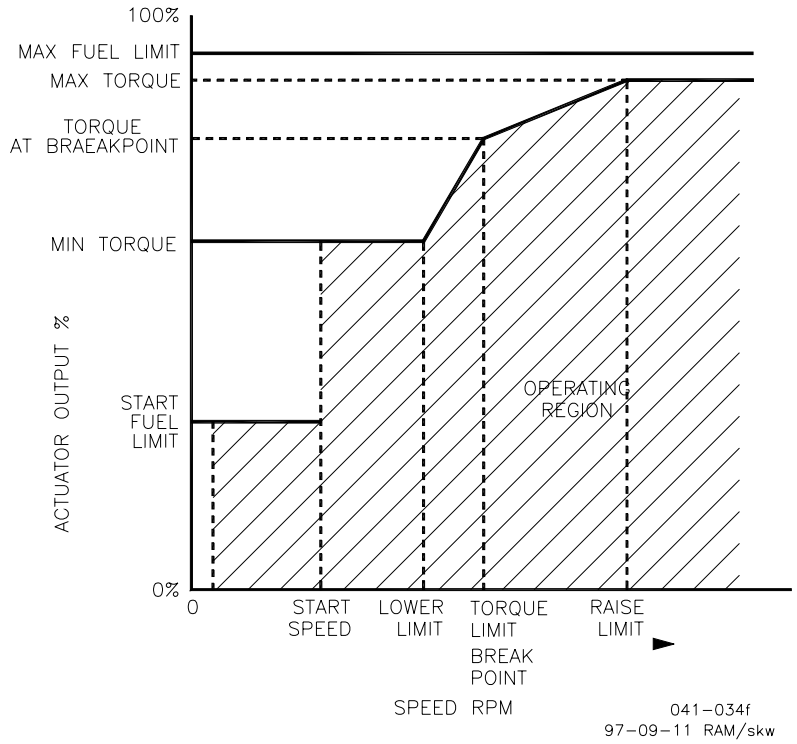

Figure 5-12. Torque Limit Map

Menu 5—Monitor Menu

Input or output values displayed on the hand held are continuously updated. Descriptions of each menu item follow:

1. Speed displays the current engine speed in rpm.

2. Speed Reference displays the current speed reference in rpm. Note that this may not be the current speed of the engine due to the effect of idle droop, fuel limiters, auxiliary input, or droop.

Katolight Service - Master Repair Manual - Page 3431

3. Actuator Output displays the current percent of Actuator output. This is useful for setup of the control fuel limiters, torque limiter, idle droop, and gain breakpoint settings.

4. Aux Input displays the voltage on the Aux Input.

5. Remote Input displays the milliamps on the Remote Speed Setting Input. This is useful for testing and system calibration.

6. Actuator Current provides a readout of the current to the actuator.

7. Actuator Position provides the voltage reading from the position feedback.

8. Run/Stop Switch Status displays the status of the discrete input at terminal 23. Closed indicates 24 Vdc is applied to the input selecting the run position. Open selects minimum fuel or the stop position.

9. Idle/Rated Switch Status displays the status of discrete input at terminal 17. Closed indicates 24 Vdc is applied to the input selecting rated speed and the maximum fuel limit is selected. Open indicates idle speed and the idle fuel limit.

10. Raise Switch Status displays the status of discrete input at terminal 19. Closed indicates 24 Vdc is applied to the input selecting raise speed.

11. Lower Switch Status displays the status of discrete input at terminal 18. Closed indicates 24 Vdc is applied to the input selecting lower speed.

12. Alternate Dynamics Switch Status displays the status of discrete input at terminal 20. Closed indicates 24 Vdc is applied to the input selecting the Alternate Dynamics.

13. Remote Reference Switch Status displays the status of discrete input at terminal 21. Closed enables the remote speed setting at terminals 14 and 15 and disables the Raise and Lower switches.

14. Isoch displays the status of the contacts at terminal 16. Open is droop, closed is in isochronous.

15. Diagnostic indicates the status of the diagnostics switch.

16. Speed Switch A, terminal 3, indicates the on/off position of the switch.

17. Speed Switch B, terminal 4, indicates the on/off position of the switch.

18. Speed Switch C, terminal 5, indicates the on/off position of the switch.

19. Fault Lamp indicates the switch position at terminal 6. This switch is on when a fault has been detected. The system must be turned off and powered back up to extinguish the lamp.

Katolight Service - Master Repair Manual - Page 3432

Menu 6—Configuration Set Points

1. Configuration Key is a code which must be entered before you can change any of the set points on the configuration menu. This helps prevent accidental modification of the set points. The code is factory set to "49". Use the "rabbit" or "turtle" keys to select the code. The code will be returned to "0" when the menu is exited.

2. Number of Gear Teeth is the number of teeth or holes in the gear or flywheel that drives the speed-sensing device. If the gear is running at camshaft speed (one-half engine speed) then you must enter one-half the number of teeth on the gear. The control requires the number of teeth seen by the MPU per engine revolution.

NOTE
Best control performance will be obtained when sensing speed from a gear rotating at full engine speed. Slower-speed gears (such as the camshaft) provide a lower sampling rate which reduces control response time.

WARNING
The number of gear teeth is used by the control to convert pulses from the speed-sensing device to engine rpm. To prevent possible serious injury from an overspeeding engine, make sure the control is properly programmed to convert the gear-tooth count into engine rpm. Improper conversion could cause engine overspeed.

3. Dynamics Map selects the mapping algorithm used to map dynamics as a function of engine speed. Figure 5-13 illustrates how dynamics vary as a function of engine speed for each map.

4. Failsafe Function. Use Rabbit or Turtle keys: Up to enable, Down to disable.

WARNING
The Failsafe function causes the ProAct control to issue a minimum fuel signal should the MPU signal fail. Should the function be disabled (to permit a fuel position while cranking or for test procedures), it must be enabled again to prevent overspeed should the signal fail while the engine is operating. Engine overspeed can damage equipment and cause personal injury or death.

Menu 0—Error Menu

1. Active Errors display errors that the control has detected that are still present. The error must be corrected before operation of the engine. Active errors can be cleared by toggling Run/Stop.

Katolight Service - Master Repair Manual - Page 3433

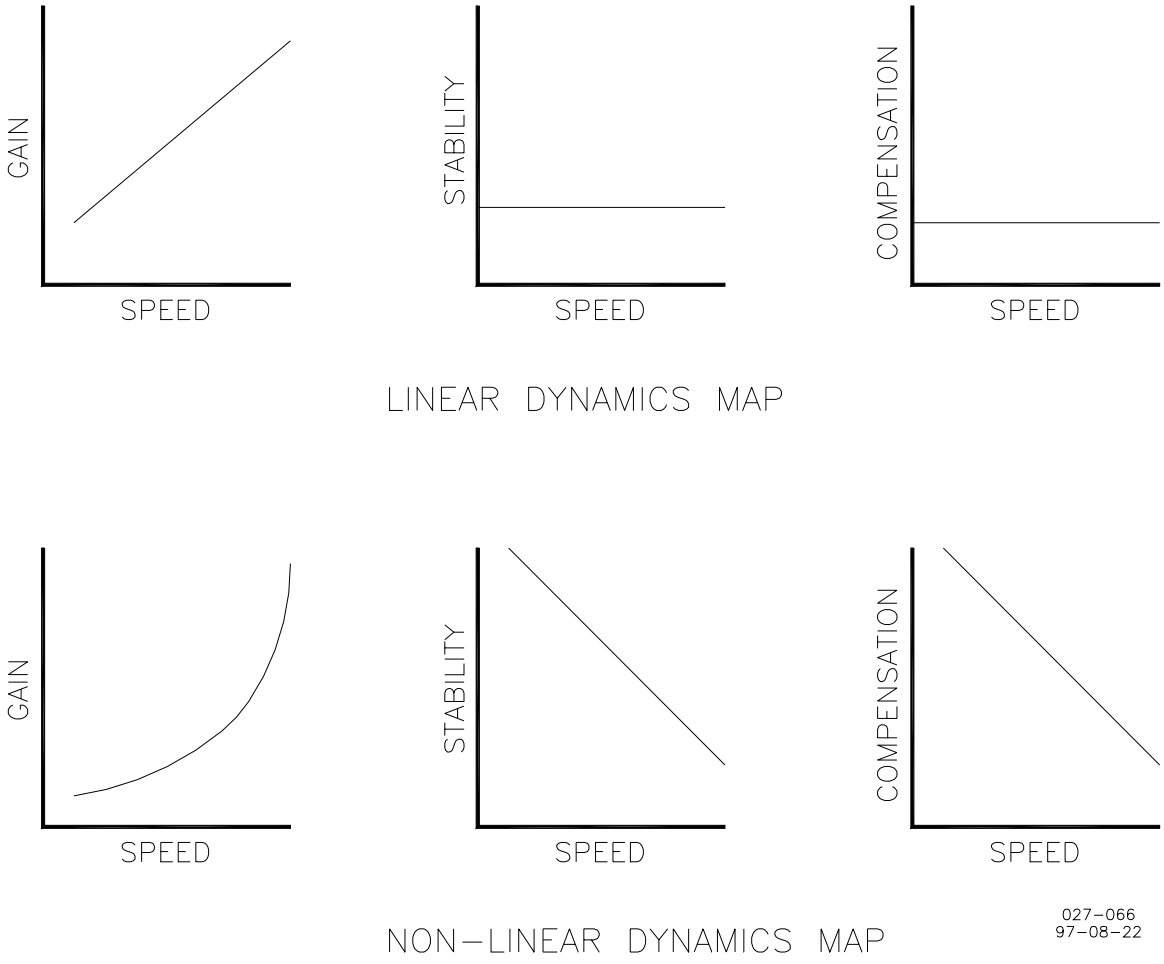

Figure 5-13. Dynamics Map Curves

2. Logged Errors provides a means of recording errors that the control detects. The error log will be saved, even if power to the control is lost. To clear the error log, press the “hot” (“black square”) key.

3. Self Test Result displays the result of power up diagnostics performed on the microprocessor, data, and program memory. A successful test gives a result of 49. Contact Woodward if the self test result is not 49.

Katolight Service - Master Repair Manual - Page 3434

Conclusion of Test and Calibration Procedures

This completes the calibration instructions. Save the set points by pressing the SAVE key on the Hand Held Programmer. Power down the control for about 10 seconds. Restore power and verify that all set points are as recorded.

CAUTION

To prevent possible damage to the engine resulting from improper control settings, make sure you save the set points before removing power from the control. Failure to save the set points before removing power from the control causes them to revert to the previously saved settings.

Disconnect the Set Point Programmer from the control.

WARNING

TO PROTECT AGAINST POSSIBLE PERSONAL INJURY, LOSS OF LIFE, and/or PROPERTY DAMAGE WHEN STARTING THE ENGINE, BE PREPARED TO MAKE AN EMERGENCY SHUTDOWN to protect against runaway or overspeed should the mechanical-hydraulic governor(s), or electric control(s), the actuator(s), fuel control(s), the driving mechanism(s), the linkage(s), or the controlled device(s) fail.

Katolight Service - Master Repair Manual - Page 3435

Katolight Service - Master Repair Manual - Page 3436

Chapter 6
System Troubleshooting Charts

Problem	Cause	Remedy
Prime mover will not start. Actuator not moving to start fuel position. NOTE If the actuator moves to start position, a problem with the prime mover fuel supply is indicated.	Supply voltage polarity reversed, or no supply voltage.	Check for supply voltage from terminals 24 (+) to 25 (–). Reverse leads if polarity is incorrect.
	Actuator not responding to input signal from control.	If there is a voltage output at control terminals 1 (+) and 2 (–), but the actuator does not move, check the wiring to the actuator for opens or shorts. Check the polarity of the actuator and feedback. Check actuator and linkage for proper installation and operation. Problems may be direction of rotation, linkage, worn components, or improper adjustment.
	Start fuel limit set too low.	Increase start fuel limit until prime mover starts.
		Increase Start Ramp.
	Speed setting too low on initial start.	Speed setting may be lower than cranking speed. Control should be set for rated speed. Increase Rated Speed setting. CAUTION If adjusting Rated Speed does not produce the correct output, return Rated Speed setting to normal start position.
	Idle Speed setting may be set too low.	Adjust idle speed.
	Run/Stop contact open.	Check terminal 23. Run/Stop contact must be closed for normal operation. Check monitor menu for switch position.

Katolight Service - Master Repair Manual - Page 3437

Problem	Cause	Remedy
Prime mover will not start. Actuator not moving to start fuel position. (cont.)	Speed sensor signal not clearing failed speed signal circuit.	Check wiring for proper connection. Check shields for proper installation. Speed sensor not spaced properly. Check for at least 1.0 Vac at terminals 10 and 11 during cranking. If less than 1.0 Vac, magnetic pickup may be spaced too far from gear. Make sure there are no metal chips on end of pickup. Check the number of teeth seen by the MPU per engine revolution against the number entered in step 2 of Menu 6. If no voltage is present, magnetic pickup may be open-circuited or shorted. Make resistance check with the leads disconnected from control. Should be 100 to 300 ►. Check Error Menu 0 for faults. WARNING The Failed Speed Signal must be enabled for routine operation of the engine to ensure shutdown and prevent possible life threatening overspeed should the MPU signal be lost at some future time. Check Monitor Menu for Speed When Cranking. WARNING TO PROTECT AGAINST POSSIBLE PERSONAL INJURY, LOSS OF LIFE, and/or PROPERTY DAMAGE WHEN STARTING THE ENGINE, BE PREPARED TO MAKE AN EMERGENCY SHUTDOWN to protect against runaway or overspeed should the mechanical-hydraulic governor(s), or electric control(s), the actuator(s), fuel control(s), the driving mechanism(s), the linkage(s), or the controlled device(s) fail.
	Faulty ProAct control.	Replace control.
Prime mover overspeeds only on starts.	Control adjustment.	Control may be adjusted for sluggish operation causing overspeed on start. Slowly adjust GAIN for fastest stable response. Stability may be adjusted too low. Increase Stability setting. Start Fuel Limit may be too high. Start Ramp may be too high. Start speed may be too low. Wrong set of dynamics may have been selected.

Problem	Cause	Remedy

Katolight Service - Master Repair Manual - Page 3438

Prime mover overspeeds only on starts. (cont.)	Linkage/Coupling.	On diesel installations verify that fuel rack is not binding and linkage is properly adjusted. It may be necessary to determine if the fuel rack is quickly following the actuator. On carburetor installations check that the butterfly is not binding. Check linkage or coupling adjustment.
	Overspeed Device.	Verify proper operation of overspeed protection devices to determine if a shutdown is occurring without an overspeed condition.
	ProAct control.	If the control does not cut back the actuator output (Menu 5), the ProAct control may be faulty. If the signal is cut back, look for a problem in the linkage or actuator.
Prime mover overspeeds after operating at rated speed for some time.	Prime mover.	Check for proper operation of prime mover fuel system. If actuator moves toward minimum fuel during overspeed, problem may not be connected with the governor.
Speed not regulated (hunting).	Incorrect dynamics programmed in control or incorrect dynamics program selected.	Improve dynamics settings or select correct dynamics program.
Los speed is not regulated at idle speed.	Actuator and linkage.	The Idle Speed setting may be below the minimum-fuel position of the actuator or prime mover fuel stop. In this case, the output voltage to the actuator will be zero. The engine will be maintained at the minimum-fuel position by the actuator or the prime mover minimum-fuel stop. These conditions indicate that the prime mover minimum-fuel position should be decreased by linkage adjustment (diesel engine) or low-idle set screw (gas engine), or the Idle Speed setting should be raised. If this action does not correct the problem, the control may be faulty.
Prime mover does not decelerate when Rated contact is open.	Faulty Rated contact.	Check Idle/Rated contact. Remove wire from terminal 17. Prime mover should decelerate.
	ProAct control ramp circuitry.	A faulty Rated contact may remain in the accelerate position with the contact open. If the Rated contact is operative, loss of idle control may be due to a faulty circuit.

Katolight Service - Master Repair Manual - Page 3439

Problem	Cause	Remedy
Prime mover will not stabilize at rated no-load speed. The instability may occur at no load or it may vary with load. Control may be erratic.	ProAct control.	Adjust GAIN, Stability, and ACTUATOR COMPENSATION in Menu 1 or 2. Check Gain Breakpoint for the lower speeds.
	Necessary external wires not properly shielded. (Electrical noise, caused by wiring carrying an ac voltage, stray magnetic fields from transformers, etc., can be picked up by improperly shielded wire. Noise will cause instability if picked up by magnetic pickup, position feedback, auxiliary input, or remote reference lines.)	The following tests will isolate noise and interference. Verify that the switchgear frame, governor chassis, and prime mover have a common ground connection. Temporarily remove the battery-charger cables from the control battery system. If the prime-mover operation is significantly improved by these modifications, replace the wires one at a time to locate the source of the trouble. External wiring may require additional shielding or rerouting from high-current lines or components. If the problem cannot be solved by these checks, it will be necessary to remove the control from the switchgear. Temporarily mount the control next to the prime mover and connect only a battery, magnetic pickup, and actuator to the control (use a separate battery placed next to the prime mover). After starting the prime mover, if necessary, apply load to check stability. If stability occurs when the control is mounted next to the prime mover, return the control to the switchgear. Run new magnetic pickup, actuator feedback, and battery power lines. Shield all wires to the control. Route all wires through conduit or an outer shield. Tie the outer shield to system ground at the end opposite to the control.
	Prime mover may not be receiving fuel as called for by the actuator voltage.	Check actuator linkage to fuel-controlling mechanism for any lost motion, binding, or excessive loading. Verify a steady fuel pressure of proper value.
	Prime mover not operating properly.	Prime mover may be causing speed variations. Control engine manually to determine if instability is in prime mover or governor control. Verify proper adjustment of fuel control linkage.
	Input voltage low.	Check supply voltage. It should be at least 18 Vdc, not more than 32 Vdc.

Katolight Service - Master Repair Manual - Page 3440

Problem	Cause	Remedy
Prime mover will not accept full load.	Prime mover.	If droop occurs near the full-load point only, it is possible the prime mover is not producing the power called for by the fuel control, or is being overloaded. Either is indicated if the fuel control is at maximum position.
	ProAct control.	Check Max Fuel Limit setting. Increase if required. Check Torque Limiter settings. Increase if required. Check droop setting. Set to 0 if required. Check Aux Input terminals to see if the auxiliaries are out of range. Maximum voltage is 2.5 Vdc. Check linkage from actuator to fuel rack.

Katolight Service - Master Repair Manual - Page 3441

Katolight Service - Master Repair Manual - Page 3442

Chapter 7
Service Options

Product Service Options

The following factory options are available for servicing Woodward equipment, based on the standard Woodward Product and Service Warranty (5-01-1205) that is in effect at the time the product is purchased from Woodward or the service is performed:

- Replacement/Exchange (24-hour service)
- Flat Rate Repair
- Flat Rate Remanufacture

If you are experiencing problems with installation or unsatisfactory performance of an installed system, the following options are available:

- Consult the troubleshooting guide in the manual.
- Contact Woodward technical assistance (see "How to Contact Woodward" later in this chapter) and discuss your problem. In most cases, your problem can be resolved over the phone. If not, you can select which course of action you wish to pursue based on the available services listed in this section.

Replacement/Exchange

Replacement/Exchange is a premium program designed for the user who is in need of immediate service. It allows you to request and receive a like-new replacement unit in minimum time (usually within 24 hours of the request), providing a suitable unit is available at the time of the request, thereby minimizing costly downtime. This is also a flat rate structured program and includes the full standard Woodward product warranty (Woodward Product and Service Warranty 5-01-1205).

This option allows you to call in the event of an unexpected outage, or in advance of a scheduled outage, to request a replacement control unit. If the unit is available at the time of the call, it can usually be shipped out within 24 hours. You replace your field control unit with the like-new replacement and return the field unit to the Woodward facility as explained below (see "Returning Equipment for Repair" later in this chapter).

Charges for the Replacement/Exchange service are based on a flat rate plus shipping expenses. You are invoiced the flat rate replacement/exchange charge plus a core charge at the time the replacement unit is shipped. If the core (field unit) is returned to Woodward within 60 days, Woodward will issue a credit for the core charge. [The core charge is the average difference between the flat rate replacement/exchange charge and the current list price of a new unit.]

Katolight Service - Master Repair Manual - Page 3443

Return Shipment Authorization Label. To ensure prompt receipt of the core, and avoid additional charges, the package must be properly marked. A return authorization label is included with every Replacement/Exchange unit that leaves Woodward. The core should be repackaged and the return authorization label affixed to the outside of the package. Without the authorization label, receipt of the returned core could be delayed and cause additional charges to be applied.

Flat Rate Repair

Flat Rate Repair is available for the majority of standard products in the field. This program offers you repair service for your products with the advantage of knowing in advance what the cost will be. All repair work carries the standard Woodward service warranty (Woodward Product and Service Warranty 5-01-1205) on replaced parts and labor.

Flat Rate Remanufacture

Flat Rate Remanufacture is very similar to the Flat Rate Repair option with the exception that the unit will be returned to you in "like-new" condition and carry with it the full standard Woodward product warranty (Woodward Product and Service Warranty 5-01-1205). This option is applicable to mechanical products only.

Returning Equipment for Repair

If a control (or any part of an electronic control) is to be returned to Woodward for repair, please contact Woodward in advance to obtain a Return Authorization Number. When shipping the item(s), attach a tag with the following information:

- name and location where the control is installed;
- name and phone number of contact person;
- complete Woodward part number(s) and serial number(s);
- description of the problem;
- instructions describing the desired type of repair.



CAUTION

To prevent damage to electronic components caused by improper handling, read and observe the precautions in Woodward manual 82715, *Guide for Handling and Protection of Electronic Controls, Printed Circuit Boards, and Modules*.

Katolight Service - Master Repair Manual - Page 3444

Packing a Control

Use the following materials when returning a complete control:

- protective caps on any connectors;
- antistatic protective bags on all electronic modules;
- packing materials that will not damage the surface of the unit;
- at least 100 mm (4 inches) of tightly packed, industry-approved packing material;
- a packing carton with double walls;
- a strong tape around the outside of the carton for increased strength.

Return Authorization Number

When returning equipment to Woodward, please telephone and ask for the Customer Service Department [1 (800) 523-2831 in North America or +1 (970) 482-5811]. They will help expedite the processing of your order through our distributors or local service facility. To expedite the repair process, contact Woodward in advance to obtain a Return Authorization Number, and arrange for issue of a purchase order for the item(s) to be repaired. No work can be started until a purchase order is received.

NOTE

We highly recommend that you make arrangement in advance for return shipments. Contact a Woodward customer service representative at 1 (800) 523-2831 in North America or +1 (970) 482-5811 for instructions and for a Return Authorization Number.

Replacement Parts

When ordering replacement parts for controls, include the following information:

- the part number(s) (XXXX-XXX) that is on the enclosure nameplate;
- the unit serial number, which is also on the nameplate.

Katolight Service - Master Repair Manual - Page 3445

How to Contact Woodward

In North America use the following address when shipping or corresponding:

Woodward Governor Company
PO Box 1519
1000 East Drake Rd
Fort Collins CO 80522-1519, USA

Telephone—+1 (970) 482-5811 (24 hours a day)
Toll-free Phone (in North America)—1 (800) 523-2831
Fax—+1 (970) 498-3058

For assistance outside North America, call one of the following international Woodward facilities to obtain the address and phone number of the facility nearest your location where you will be able to get information and service.

Facility	Phone Number
Australia	+61 (2) 9758 2322
Brazil	+55 (19) 3708 4800
India	+91 (129) 523 0419
Japan	+81 (476) 93-4661
The Netherlands	+31 (23) 5661111

You can also contact the Woodward Customer Service Department or consult our worldwide directory on Woodward's website (**www.woodward.com**) for the name of your nearest Woodward distributor or service facility. [For worldwide directory information, go to **www.woodward.com/ic/locations**.]

Engineering Services

Woodward Industrial Controls Engineering Services offers the following after-sales support for Woodward products. For these services, you can contact us by telephone, by e-mail, or through the Woodward website.

- Technical Support
- Product Training
- Field Service

Contact information:

Telephone—+1 (970) 482-5811
Toll-free Phone (in North America)—1 (800) 523-2831
E-mail—icinfo@woodward.com
Website—**www.woodward.com/ic**

Katolight Service - Master Repair Manual - Page 3446

Technical Support is available through our many worldwide locations or our authorized distributors, depending upon the product. This service can assist you with technical questions or problem solving during normal business hours. Emergency assistance is also available during non-business hours by phoning our toll-free number and stating the urgency of your problem. For technical support, please contact us via telephone, e-mail us, or use our website and reference ***Customer Services*** and then ***Technical Support***.

Product Training is available at many of our worldwide locations (standard classes). We also offer customized classes, which can be tailored to your needs and can be held at one of our locations or at your site. This training, conducted by experienced personnel, will assure that you will be able to maintain system reliability and availability. For information concerning training, please contact us via telephone, e-mail us, or use our website and reference ***Customer Services*** and then ***Product Training***.

Field Service engineering on-site support is available, depending on the product and location, from one of our many worldwide locations or from one of our authorized distributors. The field engineers are experienced both on Woodward products as well as on much of the non-Woodward equipment with which our products interface. For field service engineering assistance, please contact us via telephone, e-mail us, or use our website and reference ***Customer Services*** and then ***Technical Support***.

Katolight Service - Master Repair Manual - Page 3447

Technical Assistance

If you need to telephone for technical assistance, you will need to provide the following information. Please write it down here before phoning:

General

Your Name_____
Site Location_____
Phone Number_____
Fax Number_____

Prime Mover Information

Engine/Turbine Model Number_____
Manufacturer_____
Number of Cylinders (if applicable)_____
Type of Fuel (gas, gaseous, steam, etc)_____
Rating_____
Application_____

Governor Information

Please list all Woodward governors, actuators, and electronic controls in your system:

Woodward Part Number and Revision Letter

_____

Control Description or Governor Type

_____

Serial Number_____

Woodward Part Number and Revision Letter

_____

Control Description or Governor Type

_____

Serial Number_____

Woodward Part Number and Revision Letter

_____

Control Description or Governor Type

_____

Serial Number_____

If you have an electronic or programmable control, please have the adjustment setting positions or the menu settings written down and with you at the time of the call.

Katolight Service - Master Repair Manual - Page 3448

Appendix
Menu Summary

Initial Prestart Settings

These tables are provided for the convenience of the ProAct™ user. Each number should be recorded as it is programmed with the Hand Held Programmer. Any changes should be noted so the adjustment can be referenced from its original setting.

Menu 1—Dynamics Settings

Menu Item	Default Setting	Gas Engine Prestart Setting	Diesel Engine Prestart Setting	Actual Setting
Gain A	0.25	0.025	0.050	_____
Gain A break point	0%	100%	100%	_____
Gain B	0.25	0.025	0.050	_____
Gain B break point	30%	100%	100%	_____
Gain C	0.25	0.025	0.050	_____
Gain C break point	60%	100%	100%	_____
Gain D	0.25	0.025	0.050	_____
Gain D break point	100%	100%	100%	_____
Stability	0.25 sec.	1.0 sec.	1.0 sec.	_____
Compensation	0.10 sec.	0.15 sec.	0.15 sec.	_____
Gain Ratio	1.00	1	1	_____
Gain Window	60 rpm	60 rpm	60 rpm	_____

Menu 2—Alternate Dynamics Settings

Menu Item	Default Setting	Gas Engine Prestart Setting	Diesel Engine Prestart Setting	Actual Setting
Alt Gain A	0.10	0.025	0.050	_____
Gain A break point	0%	100%	100%	_____
Alt Gain B	0.10	0.025	0.050	_____
Gain B break point	30%	100%	100%	_____
Alt Gain C	0.10	0.025	0.050	_____
Gain C break point	60%	100%	100%	_____
Alt Gain D	0.10	0.025	0.050	_____
Gain D break point	100%	100%	100%	_____
Alt Stability	1.0 sec.	1.0 sec.	1.0 sec.	_____
Compensation	0.20 sec.	0.15 sec.	0.15 sec.	_____
Alt Gain Ratio	1	1	1	_____
Alt Gain Window	60 rpm	60 rpm	60 rpm	_____

Katolight Service - Master Repair Manual - Page 3449

Menu 3—Speed Reference Settings

Menu Item	Default Setting	Actual Setting
Rated Speed	1800 rpm	_____
Idle Speed	1200 rpm	_____
Raise Limit	1890 rpm	_____
Lower Limit	1200 rpm	_____
Accel Time	8 sec.	_____
Decel Time	3 sec.	_____
Raise Rate	2500 rpm/min.	_____
Lower Rate	2500 rpm/min.	_____
20 mA Remote Ref.	1890 rpm	_____
4 mA Remote Ref	1710 rpm	_____
Droop	5%	_____
Idle droop	0%	_____
Idle Droop break point	0%	_____
Speed Switch A On	600 rpm	_____
Speed Switch A Off	540 rpm	_____
Speed Switch B On	1200 rpm	_____
Speed Switch B Off	1140 rpm	_____
Speed Switch C On	2000 rpm	_____
Speed Switch C Off	1900 rpm	_____

Menu 4—Limiter Settings

Menu Item	Default Setting	Actual Setting
Max Fuel Limit	100%	_____
Transient Limit	0%	_____
Transient Time	0 sec.	_____
Start Fuel Limit	40%	_____
Start Ramp	1%/sec.	_____
Start Speed	400 rpm	_____
Min Torque Limit	50%	_____
Torque Limit BP	1500 rpm	_____
Torque Limit at BP	70%	_____
Max Torque Limit	90%	_____

Menu 6—Configuration Set Points

Menu Item	Default Setting	Actual Setting
Configuration Key	0	*_____
Number of Gear Teeth	60	_____
Dynamics Map	Linear	_____
Failsafe	Enabled	_____

***—Set at 49 to change menu tunables**

Katolight Service - Master Repair Manual - Page 3450

ProAct Control Menu Summary

MENU 1—Dynamics Settings
Gain A
Gain A BP
Gain B
Gain B BP
Gain C
Gain C BP
Gain D
Gain D BP
Stability
Compensation
Gain Ratio
Window Width

MENU 2—Alternate Dynamics Settings
Alt Gain A
Alt Gain A BP
Alt Gain B
Alt Gain B BP
Alt Gain C
Alt Gain C BP
Alt Gain D
Alt Gain D BP
Alt Stability
Alt Compensation
Alt Gain Ratio
Alt Window Width

MENU 3—Speed Reference Settings
Rated Speed
Idle Speed
Raise Limit
Lower Limit
Accel Time
Decel Time
Raise Rate
Lower Rate
20 mA Remote Ref.
4 mA Remote Ref
Droop
Idle Droop
Idle Droop BP
Speed Switch A On
Speed Switch A Off
Speed Switch B On
Speed Switch B Off
Speed Switch C On
Speed Switch C Off

MENU 4—Limiter Settings
Max Fuel Limit
Transient Over Fuel
Transient Time
Start Fuel Limit
Start Ramp Rate
Start Speed
Min Torque Limit
Torque Limit BP
Torque Limit at BP
Max Torque Limit

MENU 5—Monitor Menu
Speed
Speed Reference
Actuator Output
Aux Input
Remote Input
Run/Stop Switch
Idle Rated Switch
Raise Switch
Lower Switch
Alternate Dynamics Switch
Remote Reference Switch
Isoch Switch
Diagnostic Switch
Speed Switch A
Speed Switch B
Speed Switch C
Fault Lamp

MENU 6—Configuration Set Points
*Configuration Key
Number of Gear Teeth
Dynamics Map
Failsafe Function

Be sure to save any changed set points before removing power from the control.

Katolight Service - Master Repair Manual - Page 3451

Katolight Service - Master Repair Manual - Page 3452

ProAct™ Control Specifications

Operating Temperature	–40 to +85 °C (–40 to +185 °F)
Storage Temperature	–55 to +100 °C (–67 to +212 °F)
Vibration	Sine Sweep, 6 hrs/axis, 24-2000 Hz 0.5 Oct./min input level 2.5 Gs
Shock	US MIL-STD-810C, Method 516.2, Procedure III
Transit Shock	US MIL-STD-810C, Method 516.2, Procedure IV
EMI/RFI:	
Conducted Susceptibility	
Frequency (Hz)	Amplitude (Vrms)
Power Leads— 30–1000	3.0
1000–10 000	3.5
10 000–8 000 000	1.5
8 000 000–1000 000 000	1.0
All other leads—	
30 000–500 000	0.5
500 000–1 000 000	1.0
Radiated Susceptibility:	Control will not fail in an unsafe manner up to 55 V/m, 15 kHz to 1000 MHz
Humidity:	95% ±5% at 60 °C for 6 hrs 50% ±5% at -40 °C for 2 hrs

We appreciate your comments about the content of our publications.

Send comments to: icinfo@woodward.com

Please include the manual number from the front cover of this publication.

Woodward/Industrial Controls
PO Box 1519, Fort Collins CO 80522-1519, USA
1000 East Drake Road, Fort Collins CO 80525, USA
Phone +1 (970) 482-5811 • Fax +1 (970) 498-3058

E-mail and Home Page—www.woodward.com

FM 57982
BS EN ISO 9001:1994
6 March 2001

**Woodward has company-owned plants, subsidiaries, and branches,
as well as authorized distributors and other authorized service and sales facilities throughout the world.**

Complete address/phone/fax/e-mail information for all locations is available on our website.

02/4/F

QST30
Generator Drive
Fuel Control Governor

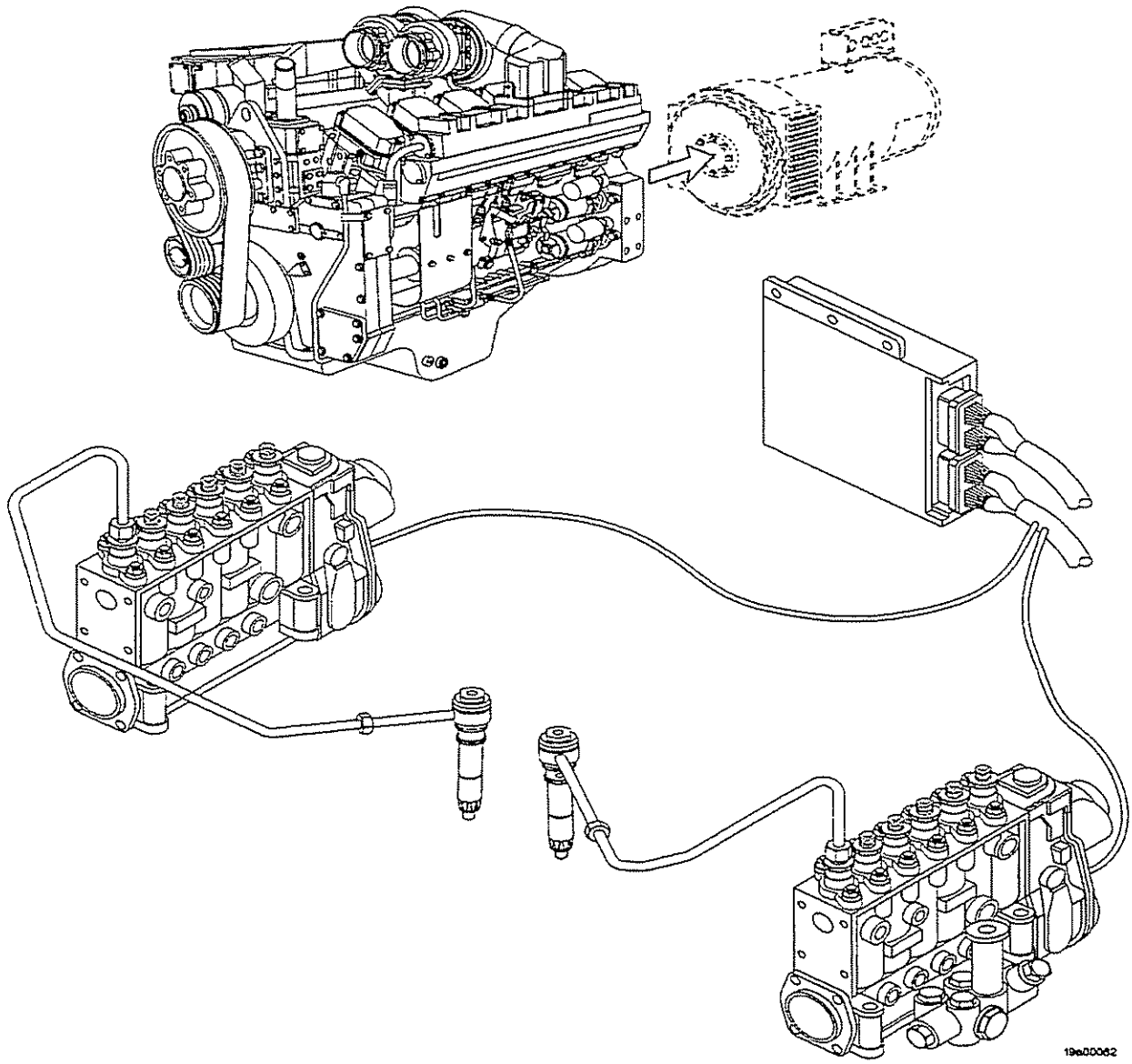

Copyright © 2002
Cummins Engine Company, Inc.
All Rights Reserved

Bulletin No. 3666323-01
Printed 2/02

Foreword

The QST30 Generator Drive Governor is used in conjunction with the Bosch fuel system. The governor can be adjusted for isochronous or droop governing applications. The governor is a normally closed (fail to the closed position) system upon loss of control voltage.

This publication contains the instructions for the installation, adjustment and troubleshooting of the Cummins QST30 governor in a generator drive application.

A series of specific service manuals (for example: Shop, Troubleshooting and Repair, and Specifications) are available and can be ordered by filling out and mailing the Literature Order Form located under Service Literature.

Cummins Engine Company, Inc. encourages the user of this manual to report errors, omissions, and recommendations for improvement. Use the postage paid, pre-addressed Literature Survey Form in the back of this manual for communicating your comments.

Questions are to be addressed to:

Cummins Engine Company, Inc.
Box 3005
Power Generation Customer Engineering Support
Mail Code 91800
Columbus, Indiana, U.S.A. 47202
Cable: CUMDIEX COLUMBUS

or call

1-800-DIESELS (1-800-343-7357).

Table of Contents

QST30 G-Drive	Page
About the Manual	1
Symbols	2
Illustrations	6
General Instructions	7
Acronyms and Abbreviations	10
Installation Tips	11
Adjustment, System	61
Description, Governor	13, 16
Description, System	34
Fuel System	18
Fuel Pump Replacement	19
Fuel Line Venting	28
Mounting, ECM	33
Operation, Isochronous/Droop	66
Operation, Parallel	71
Power Terms, Glossary of	91
Protection, Engine	30
Service Tool, Electronic	43
Start-up/Shutdown, Engine	69
Symbols, Electrical	89
Wiring, Engine	34
Wiring, Customer	38
Wiring, Multiple Unit (Barber-Colman)	73
Wiring, Multiple Unit (Woodward)	81
Tools and Repair Parts	101
Troubleshooting	107
Tables and Specifications:	
Engine Protection Setpoints	32
Adjustable Parameters	59
Monitoring and Data Logging Parameters	60
Ramp Times	68
Component and Electrical Specifications	98
Torque Values	104
Fault Codes	106

THIS PAGE LEFT INTENTIONALLY BLANK

About the Manual

This manual contains information needed to understand, correctly operate and maintain your fuel system governors as recommended by Cummins Engine Company, Inc. Additional service literature (Operation and Maintenance, Shop Manual, Troubleshooting and Repair Manual, etc.) can be ordered by filling out and mailing the Literature Order Form located in the back of this manual.

This manual does **not** cover base engine maintenance procedures. Refer to the Operation and Maintenance Manual, Bulletin No. 3666134, for information.

This manual does **not** cover generator equipment maintenance or repair procedures. Consult the generator equipment manufacturer for specific maintenance and repair recommendations.

Both metric and U.S. customary values are listed in this manual. The metric value is listed first, followed by the U.S. customary in brackets.

Numerous illustrations and symbols are used to aid in understanding the meaning of the text. Refer to page 2 for a complete listing of symbols and their definitions.

Refer to page 89 for electrical symbols used on the wiring diagrams.

Refer to page 91 for a Glossary of Power Terms.

Symbols

The following symbols have been used in this manual to help communicate the intent of the instructions. When one of the symbols appears, it conveys the meaning defined below.

	**WARNING** - Serious personal injury or extensive property damage can result if the warning instructions are not followed.
	**CAUTION** - Minor personal injury can result or a part, an assembly, or the engine can be damaged if the caution instructions are **not** followed.
	Indicates a **REMOVAL** or **DISASSEMBLY** step.
	Indicates an **INSTALLATION** or **ASSEMBLY** step.
	**INSPECTION** is required.
	**CLEAN** the part or assembly.
	**PERFORM** a mechanical or time **MEASUREMENT.**
	**LUBRICATE** the part or assembly.
	Indicates that a **WRENCH** or **TOOL SIZE** will be given.
	**TIGHTEN** to a specific torque.
	**PERFORM** an electrical **MEASUREMENT.**
	Refer to another location in this manual or another publication for additional information.
	During this procedure, the **MAIN CIRCUIT BREAKER IS "CLOSED".** Normal power is supplied to the equipment.
	During this procedure, the **MAIN CIRCUIT BREAKER IS "OPEN".** Normal power is **not** supplied to the equipment.
	This procedure requires that the **GENERATOR SET IS "ON"** to supply power to the equipment.
	This procedure requires that the **GENERATOR SET IS "OFF".** Power is not supplied to the equipment.
	This procedure requires that **THE MAIN WIRING HARNESS MUST** be disconnected.
	The **PRESENCE of DANGEROUS VOLTAGE.** More that 40 volts A.C.
	The component weighs 23 kg. [50 lb.] or more. To avoid personal injury, use a hoist or get assistance to lift the component.

Simbolos

Los simbolos siguientes son usados en este manual para clarificar el proceso de las instrucciones. Cuando aparece uno de estos simbolos, su significado se especifica en la parte inferior.

	**ADVERTENCIA -** Serios daños personales o daño a la propiedad puede resultar si las instrucciones de Advertencia **no** se consideran.
	**PRECAUCION -** Daños menores puedin resultar, o de piezas del conjunto o el motor puede averiarse si las instrucciones de Precaución **no** se siguen.
	Indica un paso de **REMOCION o DESMONTAJE**.
	Indica un paso de **INSTALACION o MONTAJE.**
	Se requiere **INSPECCION.**
	**LIMPIESE** la pieza o el montaje.
	**EJECUTESE** una **MEDICION** mecánica o del tiempo.
	**LUBRIQUESE** la pieza o el montaje.
	Indica que se dará una **LLAVE DE TUERCAS** o el **TAMAÑO DE HERRAMIENTA.**
	**APRIETESE** hasta un par torsor especifico.
	**EJECUTESE** una **MEDICION** eléctrica.
	Para información adicional refiérase a otro emplazamiento de esta manual o a otra publicación anterior.
	Durante el procedimiento, **EL DISYUNTOR PRINCIPAL ESTA CERRADO.** Se suministra potencia normal al equipo.
	Durante esta procedimiento, **EL DISYUNTOR PRINCIPAL ESTA ABIERTO.** No se suministra potencia normal al equipo.
	Este procedimiento requiere que el **GRUPO ELECTROGENO ESTE CONECTADO** para suministrar potencia al equipo.
	Este procedimiento requiere que el **GRUPO ELECTROGENO ESTE DESCONECTADO.** No se suministrar potencia al equipo.
	Esta procedimiento requiere que debe desconectarse el **HAZ PRINCIPAL DE CONDUCTORES PREFORMADO.**
	Proporicona un aviso de precaución para evitar daños corporales causados por choques eléctricos o electrocución. El peligro está en la vecindad del alto voltaje c.a. sin aislamiento.
	El componente pesa 23 kg [50 lb] o mas. Para evitar dano corporal empleen una cabria u obtengan ayuda para elevar el componente.

Symbole

In diesem Handbuch werden die folgenden Symbole verwendet, die wesentliche Funktionen hervorheben. Die Symbole haben folgende Bedeutung:

	WARNUNG - Wird die Warnung nicht beachtet, dann besteht erhöhte Unfall- und Beschädigungsgefahr.
	VORSICHT - Werden die Vorsichtsmassnahmen nicht beachtet, dann besteht Unfall- und Beschädigungsgefahr.
	AUSBAU bzw. ZERLEGEN.
	EINBAU bzw. ZUSAMMENBAU.
	INSPEKTION erforderlich.
	Teil oder Baugruppe REINIGEN.
	DIMENSION - oder ZEITMESSUNG.
	Teil oder Baugruppe ÖLEN.
	WERKZEUGGRÖSSE wird angegeben.
	ANZUG auf vorgeschriebenes Drehmoment erforderlich.
	Elektrische MESSUNG DURCHFÜHREN.
	Weitere Informationen an anderer Stelle bzw. in anderen Handbüchern.
	Während des Arbeitsgangs ist der **HAUPTTRENNSCHALTER GESCHLOSSEN.** Das Gerät wird von der normalen Stromversorgung versorgt.
	Während des Arbeitsgangs ist der **HAUPTTRENNSCHALTER GEÖFFNET.** Das Gerät wird nicht von der normalen Stromversorgung versorgt.
	Der Arbeitsgang erfordert, daB der **LAUFENDE STROMVERSORGER** das Gerät mit Strom versorgt.
	Der Arbeitsgang erfordert, daB der **STROMVERSORGER ABGESCHALTET IST** und das Gerät nicht mit Strom versorgt wird.
	Dieser Arbeitsgang erfordert Abklemmen des **HAUPTKABELSTRANGS.**
	Unfallgefahr bedingt durch elektrischen Schlag. Nichtisolierte Hochspannungsleitungen in der Nähe.
	Das teil weigt 23 kg [50 lb] oder mehr. Zur vermeidung von koerperverletzung winde benutzen oder hilfe beim heben des teils in anspruch nehmen.

Symboles

Les symboles suivants sont utilisés dans ce manuel pour aider à communiquer le but des instructions. Quand l'un de ces symboles apparlaît, il évoque le sens défini ci-dessous:

	**AVERTISSEMENT -** De graves lésions corporelles ou des dommages matériels considérables peuvent survenir si les instructions données sous les rubriques "Avertissement" **ne** sont **pas** suivies.
	**ATTENTION -** De petites lésions corporelles peuvent survenir, ou bien une pièce, un ensemble ou le moteur peuvent être endommagés si les instructions données sous les rubriques "Attention" **ne** sont **pas** suivies.
	Indique une opération de **DEPOSE.**
	Indique une opération de **MONTAGE.**
	**L'INSPECTION** est nécessaire.
	**NETTOYER** la pièce ou l'ensemble.
	**EFFECTUER** une **MESURE** mécanique ou de temps.
	**GRAISSER** la pièce ou l'ensemble.
	Indique qu'une **DIMENSION DE CLE** ou **D'OUTIL** sera donnée.
	**SERRER** à un couple spécifique.
	**EFFECTUER** une **MESURE** électrique.
	Se reporter à un autre endroit dans ce manuel ou à une autre publication pour obtenir des infomations plus complètes.
	Pendant la procédure, le **DISJONCTEUR PRINCIPAL EST FERME.** L´équipement recoit l´alimentation normale.
	Pendant cette procédure, le **DISJONCTEUR PRINCIPAL EST OUVERT.** L´équipement ne recoit pas l´alimentation normale.
	Cette procédure nécessite que le **GROUPE ELECTROGENE SOIT EN MARCHE** pour alimenter l´équipement.
	Cette procédure nécessite que le **GROUPE ELECTROGENE SOIT EN ARRET.** L´équipement n´est pas alimenté.
	Cette procédure nécessite de déconnecter le **CABLAGE PRINCIPAL.**
	Avertit de prendre soin d´éviter des lésions corporelles provenant de décharge électrique ou d'électrocution. Il y a dans le voisinage une haute tension C.A. non isolée.
	Le composant pese 23kg [50 lb] ou davantage. Pour eviter toute blessure, employer un appariel de levage ou demander de l'aide pour le soulever.

Illustrations

Some of the illustrations throughout this manual are generic and will **not** look exactly like the engine or parts used in your application. The illustrations can contain symbols to indicate an action required and an acceptable or **not** acceptable condition.

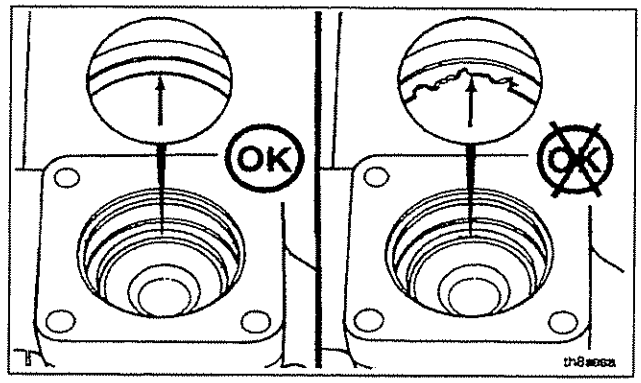

The illustrations included in this manual are intended to illustrate procedures performed or location of particular items.

The procedure performed or location of the product described will be the same even though the illustrations may vary.

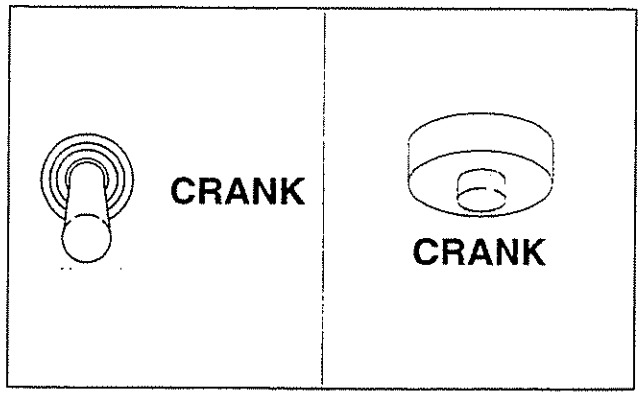

General Safety Instructions

Important Safety Notice

⚠ WARNING ⚠

Improper practices or carelessness can cause burns, cuts, mutilation, asphyxiation or other bodily injury or death.

Read and understand all of the safety precautions and warnings before performing any repair. This list contains the general safety precautions that **must** be followed to provide personal safety. Special safety precautions are included in the procedures when they apply.

- Make sure the work area surrounding the product is dry, well lit, ventilated, free from clutter, loose tools, parts, ignition sources and hazardous substances. Be aware of hazardous conditions that can exist.
- **Always** wear protective glasses and protective shoes when working.
- Rotating parts can cause cuts, mutilation or strangulation.
- Do **not** wear loose-fitting or torn clothing. Remove all jewelry when working.
- Disconnect the battery (negative [-] cable first) and discharge any capacitors before beginning any repair work. Disconnect the air starting motor if equipped to prevent accidental engine starting. Put a "Do **Not** Operate" tag in the operator's compartment or on the controls.
- Use ONLY the proper engine barring techniques for manually rotating the engine. Do **not** attempt to rotate the crankshaft by pulling or prying on the fan. This practice can cause serious personal injury, property damage, or damage to the fan blade(s) causing premature fan failure.
- If an engine has been operating and the coolant is hot, allow the engine to cool before you slowly loosen the filler cap and relieve the pressure from the cooling system.
- Do **not** work on anything that is supported ONLY by lifting jacks or a hoist. **Always** use blocks or proper stands to support the product before performing any service work.
- Relieve all pressure in the air, oil, fuel and the cooling systems before any lines, fittings or related items are removed or disconnected. Be alert for possible pressure when disconnecting any device from a system that utilizes pressure. Do **not** check for pressure leaks with your hand. High pressure oil or fuel can cause personal injury.
- To prevent suffocation and frostbite, wear protective clothing and ONLY disconnect fuel and liquid refrigerant (freon) lines in a well-ventilated area. To protect the environment, liquid refrigerant systems **must** be properly emptied and filled using equipment that prevents the release of refrigerant gas (fluorocarbons) into the atmosphere. Federal law requires capturing and recycling refrigerant.
- To avoid personal injury, use a hoist or get assistance when lifting components that weight 23 kg [50 lb] or more. Make sure all lifting devices such as chains, hooks or slings are in good condition and are of the correct capacity. Make sure hooks are positioned correctly. **Always** use a spreader bar when necessary. The lifting hooks **must not** be side-loaded.
- Corrosion inhibitor, a component of SCA and lubricating oil, contains alkali. Do **not** get the substance in your eyes. Avoid prolonged or repeated contact with skin. Do **not** swallow internally. In case of contact, immediately wash skin with soap and water. In case of contact, immediately flood eyes with large amounts of water for a minimum of 15 minutes. IMMEDIATELY CALL A PHYSICIAN. KEEP OUT OF THE REACH OF CHILDREN.
- Naptha and Methyl Ethyl Ketone (MEK) are flammable materials and **must** be used with caution. Follow the manufacturer's instructions to provide complete safety when using these materials. KEEP OUT OF THE REACH OF CHILDREN.
- To avoid burns, be alert for hot parts on products that have just been turned off, and hot fluids in lines, tubes and compartments.
- **Always** use tools that are in good condition. Make sure you understand how to use them before performing any service work. Use ONLY genuine Cummins or Cummins ReCon® replacement parts.
- **Always** use the same fastener part number (or equivalent) when replacing fasteners. Do **not** use a fastener of lessor quality if replacements are necessary.
- Do **not** perform any repair when fatigued or after consuming alcohol or drugs that can impair your functioning.
- Some state and federal agencies in the United States of America have determined that used engine oil can be carcinogenic and can cause reproductive toxicity. Avoid inhalation of vapors, ingestion and prolonged contact with used engine oil.

General Repair Instructions

This engine incorporates the latest diesel technology at the time it was manufactured; yet, it is designed to be repaired using normal repair practices performed to quality standards.

- **Cummins Engine Company, Inc. does not recommend or authorize any modification or repairs to engines or components except for those detailed in Cummins Service Information. In particular, unauthorized repair to safety-related components can cause personal injury or death. Below is a partial listing of components classified as safety-related:**

Air Compressor
Air Controls
Air Shutoff Assemblies
Balance Weights
Cooling Fan
Fan Hub Assembly
Fan Mounting Bracket(s)
Fan Mounting Capscrews
Fan Hub Spindle
Flywheel
Flywheel Crankshaft Adapter
Flywheel Mounting Capscrews
Fuel Shutoff Assemblies
Fuel Supply Tubes
Lifting Brackets
Throttle Controls
Turbocharger Compressor Casing
Turbocharger Oil Drain Line(s)
Turbocharger Oil Supply Line(s)
Turbocharger Turbine Casing
Vibration Damper Mounting Capscrews

- **Follow all safety instructions noted in the procedures**

  — Follow the manufacturer's recommendations for cleaning solvents and other substances used during the repair of the engine. Some solvents and used engine oil have been identified by government agencies as toxic or carcinogenic. Avoid excessive breathing, ingestion and contact with such substances. **Always** use good safety practices with tools and equipment.

- **Provide a clean environment and follow the cleaning instructions specified in the procedures**

  — The engine and its components **must** be kept clean during any repair. Contamination of the engine components will cause premature wear.

- **Perform the inspections specified in the procedures**

- **Replace all components or assemblies which are damaged or worn beyond the specifications**

- **Use genuine Cummins new or ReCon® service parts and assemblies**

  — The assembly instructions have been written to use again as many components and assemblies as possible. When it is necessary to replace a component or assembly, the procedure is based on the use of new Cummins or Cummins ReCon® components. All of the repair services described in this manual are available from all Cummins Distributors and most Dealer locations.

- **Follow the specified disassembly and assembly procedures to avoid damage to the components**

Complete rebuild instructions are available in the shop manual which can be ordered or purchased from a Cummins Authorized Repair Location. Refer to Service Literature Section for ordering instructions.

Welding on a mobile or stationary generator-set with an Electronic Controlled Fuel System

⚠ CAUTION ⚠

Disconnect both the positive (+) and negative (-) battery cables from the battery before welding on the unit. Attach the welder ground cable no more than 0.61 meters [2 feet] from the part being welded. Do not connect the ground cable of the welder to the ECM cooling plate or ECM. Welding on the engine or engine mounted components is not recommended.

General Cleaning Instructions

Solvent and Acid Cleaning

Several solvent and acid-type cleaners can be used to clean the engine parts. Experience has shown that the best results can be obtained using a cleaner that can be heated to 82 to 93 degrees Celsius [180 to 200 degrees Fahrenheit]. A cleaning tank that provides a constant mixing and filtering of the cleaning solution will give the best results. **Cummins Engine Company, Inc. does not recommend any specific cleaners. Always** follow the cleaner manufacturer's instructions.

Remove all the gasket material, o-rings, and the deposits of sludge, carbon, etc., with a wire brush or scraper before putting the parts in a cleaning tank. Be careful **not** to damage any gasket surface. When possible, steam clean the parts before putting them in the cleaning tank.

⚠ WARNING ⚠

Acid is extremely dangerous and can damage the machinery. Always provide a tank of strong soda water as a neutralizing agent.

Rinse all of the parts in hot water after cleaning. Dry completely with compressed air. Blow the rinse water from all of the capscrew holes and the oil drillings.

If the parts are **not** to be used immediately after cleaning, dip them in a suitable rustproofing compound. The rustproofing compound **must** be removed from the parts before installation on the engine.

Steam Cleaning

Steam cleaning can be used to remove all types of dirt that can contaminate the cleaning tank. It is a good way to clean the oil drillings.

⚠ WARNING ⚠

Wear protective clothing to prevent personal injury from the high pressure and extreme heat.
Do **not** steam clean the following parts:

1. Electrical Components
2. Wiring
3. Injectors
4. Fuel Pump
5. Belts and Hoses
6. Bearings
7. Electronic Control Module (ECM)
8. ECM connectors

Glass or Plastic Bead Cleaning

Glass or plastic bead cleaning can be used on many engine components to remove carbon deposits. The cleaning process is controlled by the size of the glass or plastic beads, the operating pressure, and the cleaning time.

⚠ CAUTION ⚠

Do not use glass or plastic bead cleaning on aluminum piston skirts. Do not use glass bead cleaning on aluminum ring grooves. Small particles of glass or plastic will embed in the aluminum and result in premature wear. Valves, turbocharger shafts, etc. can also be damaged. Follow the cleaning directions listed in the procedures.

NOTE: Plastic bead blasting media, Part No. 3822735, can be used to clean aluminum ring grooves. Do **not** use any bead blasting media on pin bores or aluminum skirts.

Follow the equipment manufacturer's cleaning instructions. The following guidelines can be used to adapt to manufacturer's instructions:

1. Bead Size:
   - Use U.S. size No. 16-20 for piston cleaning with plastic bead media, Part No. 3822735.
   - Use U.S. size No. 70 for piston domes with glass media.
   - Use U.S. size No. 60 for general purpose cleaning with glass media.
2. Operating Pressure:
   - Glass: Use 620 kPa [90 psi] for general purpose cleaning.
   - Plastic: Use 270 kPa [40 psi] for piston cleaning.
3. Steam clean or wash the parts with solvent to remove all of the foreign material and glass or plastic beads after cleaning. Rinse with hot water. Dry with compressed air.
4. Do **not** contaminate the wash tanks with glass or plastic beads.

Acronyms and Abbreviations

A	Ampere
AC	Alternating Current
ABO	Area Business Organization
AWG	American Wire Gage
°C	Degree Celsius
cSt	Centistokes
COM	Communication
CTS	Cooling Temperature Sensor
CW	Clockwise
CCW	Counterclockwise
DC	Direct Current
DSR	Data Set Ready
DTR	Data Terminal Ready
ECM	Electronic Control Module
EPA	Environment Protection Agency
EPROM	Erasable Programmable Read Only Memory
EPS	Engine Position Sensor
ESS	Engine Speed Sensor
°F	Degree Fahrenheit
FSOV	Fuel Shutoff Valve
ft (FT)	Foot
GOEM	G-Drive Original Equipment Manufacturer
H_2O	Water
HCT	High Coolant Temperature
Hg	Mercury
hp	Horsepower
Hz	Hertz
in	Inch
Kg	Kilogram
kPa	Kilopascal
KW	Kilowatt
lb	Pound
LED	Light-Emitting Diode
LOP	Low Oil Pressure
mA	Milliampere
mm	Millimeter
N·m	Newton-meter
O/M	Owner-Operator Manual
OEM	Original Equipment Manufacturer
OPS	Oil Pressure Sensor
OSS	Over Speed Sensor
psi	Pounds Per Square Inch
PT	Potential Transformer
PWM	Pulse Width Modulator
rpm(RPM)	Revolutions Per Minute
RXD	Receive Data
SCA	Supplemental Coolant Additive
TDC	Top Dead Center
TXD	Transmit Data
V	Volts
VAC	Volts-Alternating Current
VDC	Volts-Direct Current

QST30 Governor Installation Tips

1. Recognize that all governor wiring must be connected "Point to Point".

2. There must be a minimum of 2.5 VAC (from magnetic pickup speed sensor) present between terminals 21 and 22 during cranking and anytime the engine is operating.

3. Follow all Cummins Service Bulletins and Installation Requirements (Ref.: QST30 G-Drive Engine Installation Requirements, 3884904).

4. Follow Installation Requirements for return fuel plumbing to prevent aeration of supply fuel.

5. Connector B of the customer built harness accepts 0.8 - 1.0mm [#20 - #18] wire.

6. Use 1.0 mm [#18] twisted wire for load sharing bias and voltage reference leads.

7. Follow instructions for proper twisting and shielding of wire.

8. When using Woodward and Barber-Colman modules for parallel operation of generator sets, properly calibrate the governor controller before adding the load sharing, auto-synchronizer and/or load command hardware, to the system. Insure that Barber-Colman and Woodward controls are calibrated per current and applicable supplier procedures.

9. For parallel systems, make certain the voltage regulators are equipped, and properly set, for parallel operation.

10. To avoid pin and harness damage, use the following test lead service parts when taking a measurement (Reference Page 101):

Weatherpack		Deutsch		Deutsch/Metri-Pac	
Male	3823995	Male	3823993 3824811	Male	3822758
Female	3823996	Female	3823994 3824812	Female	3822917

11. Install the governor controller within 12.7 m [50 ft.] (total harness length) of the engine connector (at the flywheel housing).

12. Install any customer supplied controls (that integrate with the QST30 ECM) within 12.7 m [50 ft.] (total harness length) of the ECM.

13. Do not mount the governor control box directly to the engine block or any engine component. The ECM is not warranted for engine mounting.

14. Do not use any battery negative or other voltages of the governor for relay or other electrical component's circuits.

15. Do not remove the ECM "A" or "B" connectors from the QST30 governor control box until power to the governor control box is switched off or removed.

16. Do not adjust the remote speed pot while in the idle mode.

QST30 Governor Installation Tips (cont.)

17. Do not short out or overload the magnetic pickup output with speed switch or tachometer loads.

18. Do not use the ECM speed sensor (magnetic pickup) backup connector under any circumstance for customer instrumentation or loads. This connection is for engine speed backup only in the event the main coil connection fails. With both connectors hooked up, magnetic coupling between the coils may occur generating false data from the speed sensor to the ECM.

Governor Description

The Speed Governor contains an Engine Governor Control Module, Control Module Harness, an Engine Mounted Harness and an Engine Mounted Speed Sensor (magnetic pickup).

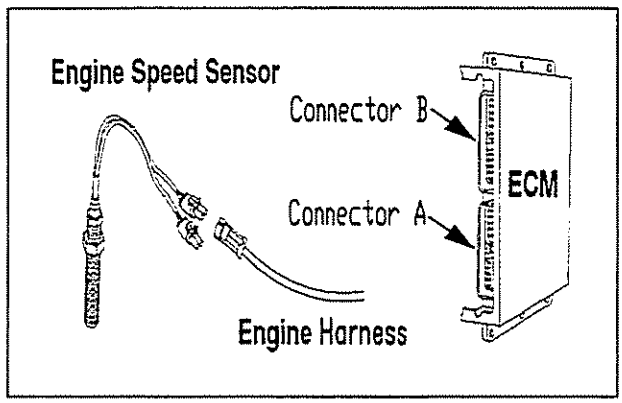

The QST 30 Governor is a normally closed system; that is, when voltage to the actuators is interrupted, the control rack is returned to the zero fuel position shutting the engine down.

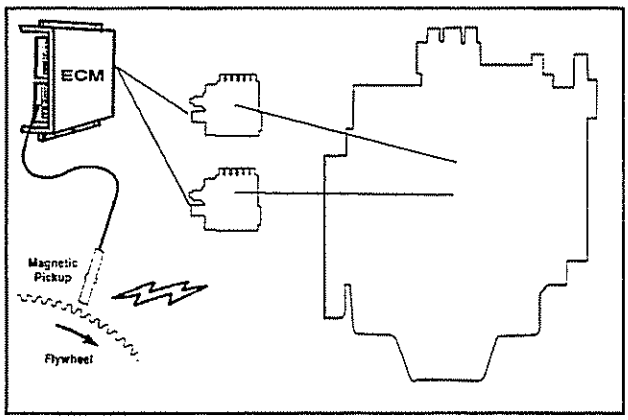

The magnetic pickup senses engine speed at the flywheel ring gear and sends an alternating current (AC) electrical signal to the governor control. The governor control compares the electrical signal from the magnetic pickup with a preset reference point. If there is a difference in the two signals, the control will adjust the voltage to the fuel pump actuators.

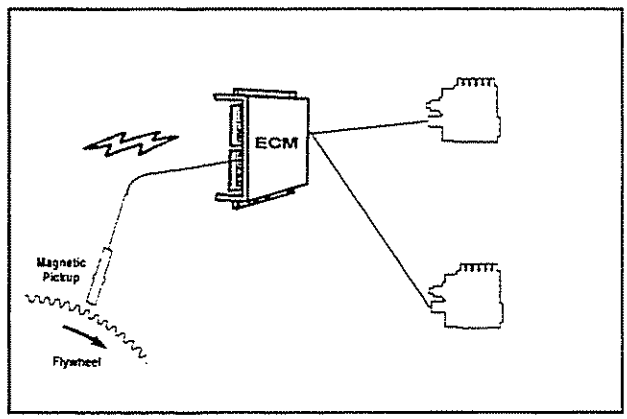

A change in voltage to the actuator coil will cause linear movement in the fuel pump control racks. The fuel flow, and engine speed or power, will change with the regulated position of the control racks.

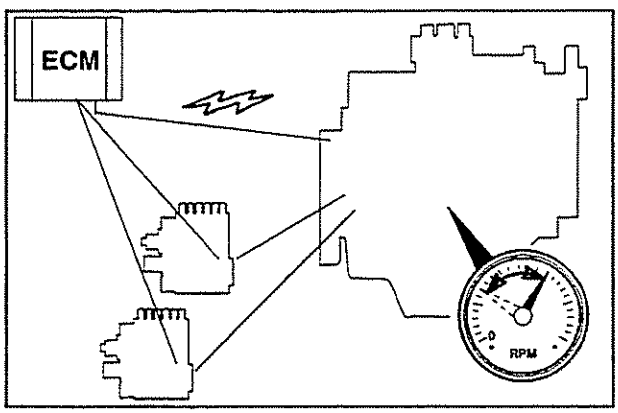

Magnetic Pickup Installation

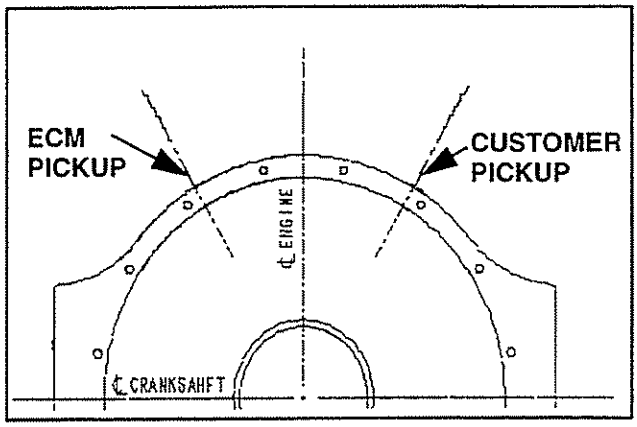

The magnetic pickup is an electromagnetic speed sensing device mounted in the flywheel housing. The flywheel housing is set up with two magnetic pickup hole locations. When viewed from the rear (Generator side), the left-hand hole is for the ECM pickup, the right-hand hole is for the customer's use.

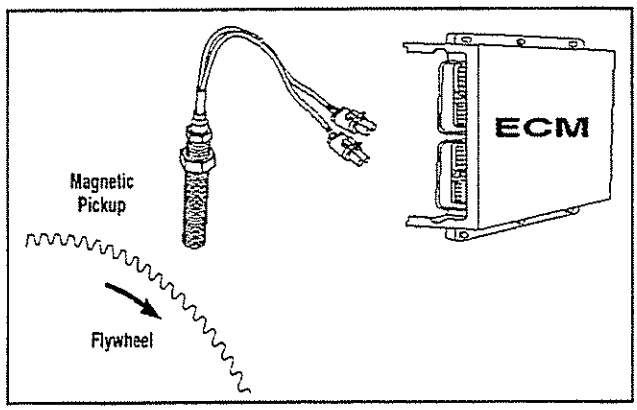

The ECM magnetic pickup will have two connectors. One connector is for the engine harness hookup. The other connector is for backup only. (The backup will have an additional plug seal). **DO NOT** use the back-up connector for other devices, as 'magnetic coupling' between the two connector coils could cause unreliable data from the speed sensor.

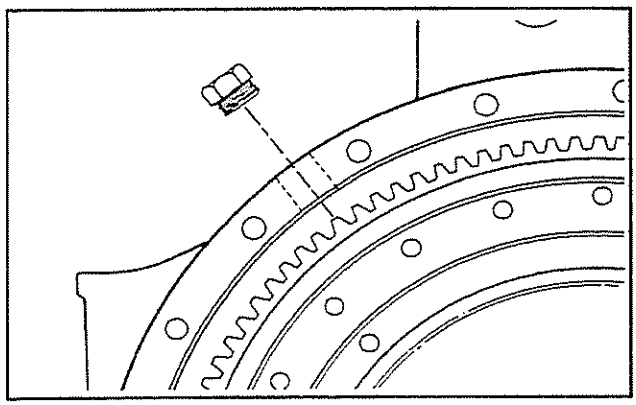

When installing the customer side magnetic pickup, first remove the pipe plug on the right-hand side of the flywheel housing.

Ensure that a ring gear tooth is centered under the magnetic pickup hole. Rotate the flywheel if necessary.

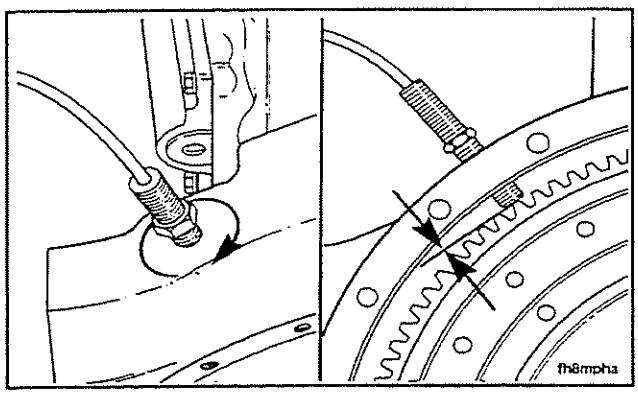

To install the magnetic pickup, screw the magnetic pickup in until it contacts the targeted gear tooth. The magnetic pickup will screw in very easily; do not use excessive pressure to install.

Note: If the magnetic pickup does not turn with finger pressure, check the hole and magnetic pickup threads. Chase threads with a tap if necessary. Using a magnet, remove any chips created by the tap.

Back the magnetic pickup out (counterclockwise) 1/2 to 3/4 turn.

If a feeler gauge can be inserted between the magnetic pickup and the flywheel ring gear tooth, back the magnetic pickup out 0.71 to 1.07 mm [0.028 to 0.042 in.] from the gear tooth.

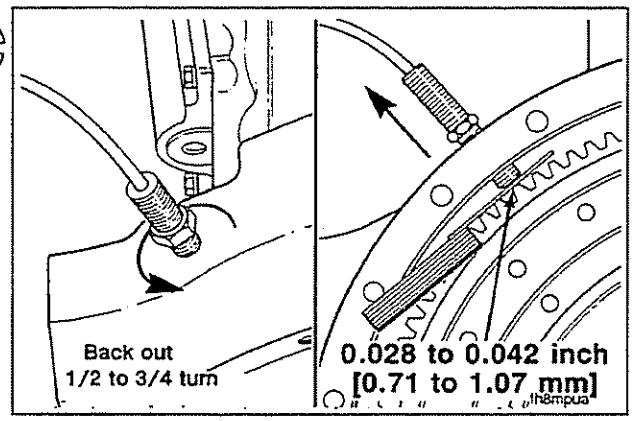

Tighten the jam nut on the flywheel housing. While holding the magnetic pickup, torque the jam nut to 34-47 N·m [25-35 ft-lb].

⚠ CAUTION ⚠

Jam nut over-torque will damage the magnetic pickup.

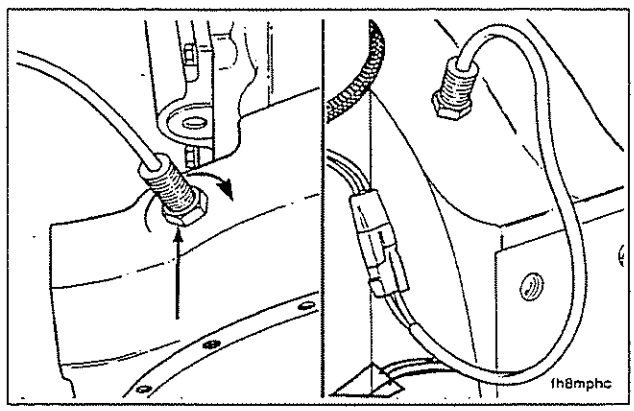

Plug the electrical connection into the magnetic pickup, when required.

Install the main generator, if it was removed.

When a ring gear tooth passes the magnetic pickup, an AC voltage is induced producing the speed signal for the ECM. One cycle is induced for each gear tooth.

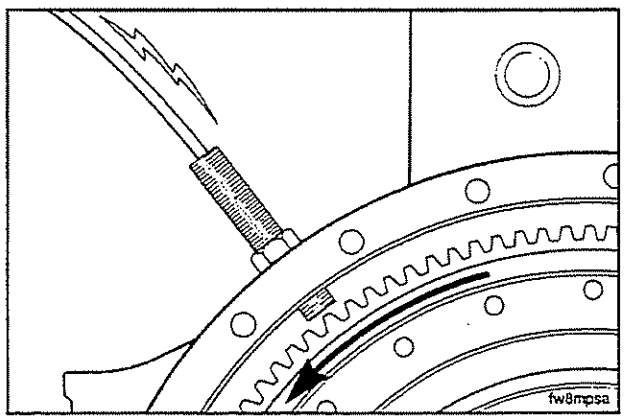

The speed signal voltage is connected to the ECM speed signal input pins (pins 21 and 22 of Connector A) via the engine and connecting harnesses. Voltage readings should be between 2.5 to 50 VAC under any running condition (cranking or run speeds).

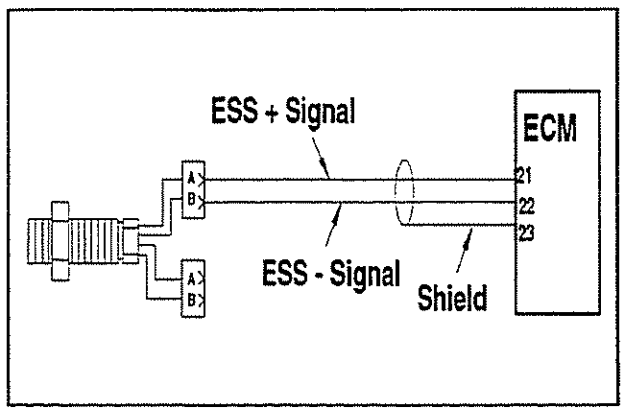

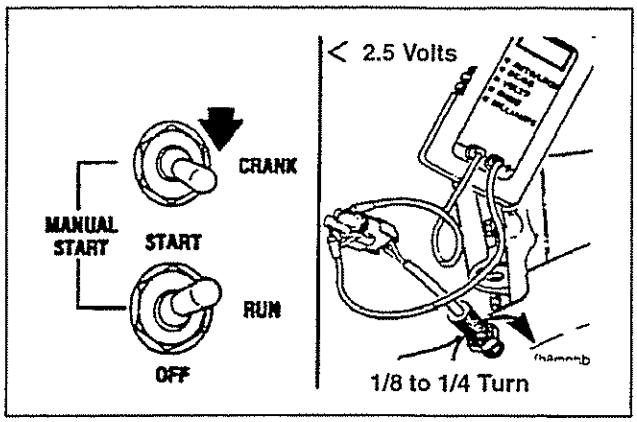

Check the magnetic pickup voltage at the pigtail connector designated for use. If the magnetic pickup signal is less than 2.5 VAC when cranking the engine, screw the pickup in (clockwise) 1/8 to 1/4 turn.

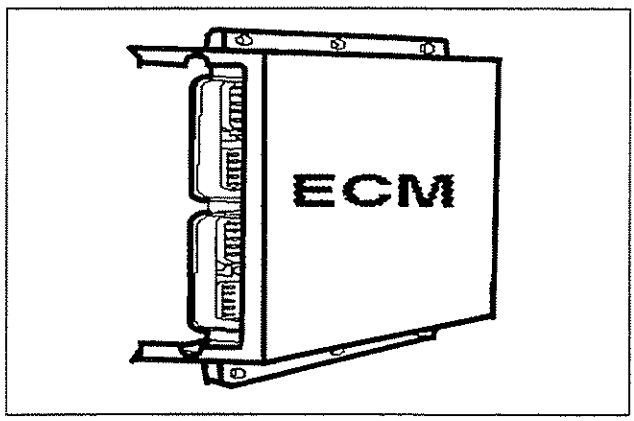

Power Source

The governor control is designed to operate between 22 to 34 VDC.

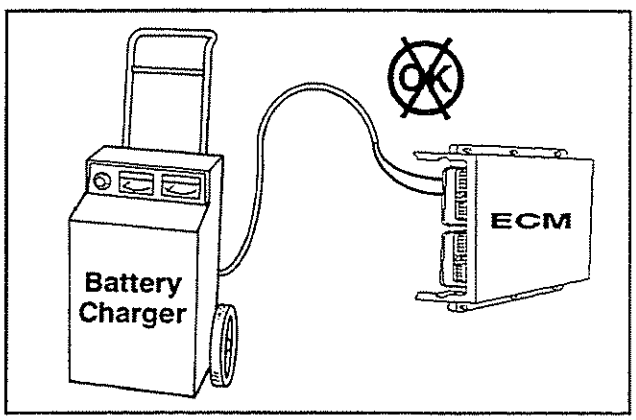

⚠ CAUTION ⚠

Do not connect the governor control to a battery charger. Due to the circuitry and method of operation of the chargers, the governor will not function properly. Connect the battery charger to the battery.

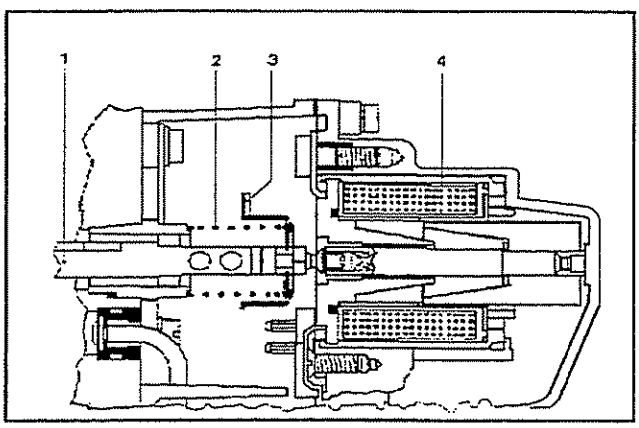

Governor Actuator Description

The Governor Actuator is an electromagnetic device located in each fuel pump (Bosch RE30 actuators). When the actuator coil (4) is energized by an ECM voltage it causes the actuator plunger (3) to move in a linear direction. The plunger, together with the return spring (2), controls the position of the fuel control rack (1) (in a linear direction).

Linear rack movement causes the control sleeve to rotate the fuel plunger.

A camshaft moves the fuel plunger up and down.

The rotational movement together with the up-and-down movement of the fuel plunger, meters the amount of fuel supplied to the injector.

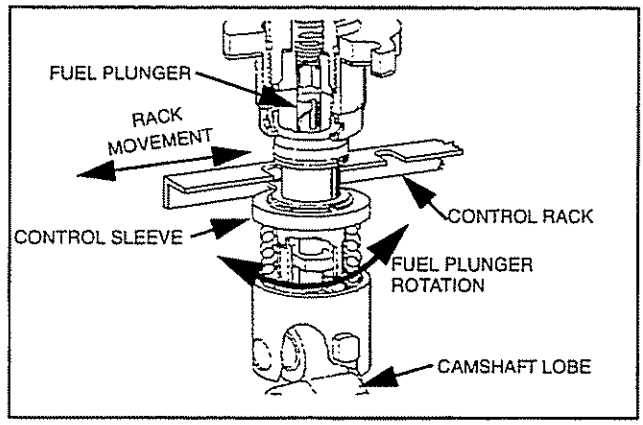

The Rack Travel Sensor sends a signal to the ECM verifying that the control rack has been properly positioned by the actuator.

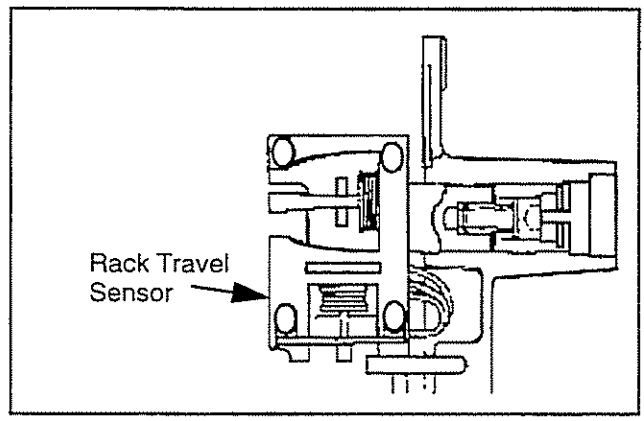

If the actuator is not energized, the return spring forces the control rack to the zero fuel position shutting the engine down. This action rotates the fuel plunger to the spill port which bypasses fuel through the overflow valve to the return line.

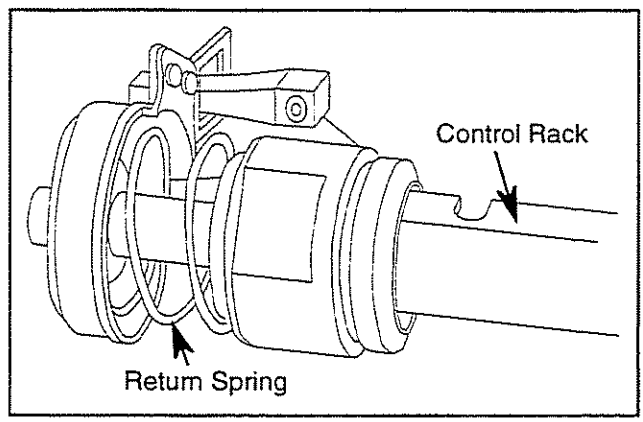

If a Service Tool is available, it can be used to perform a Fuel Pump Rack Test. (See Fuel Pump Rack Test page 46).

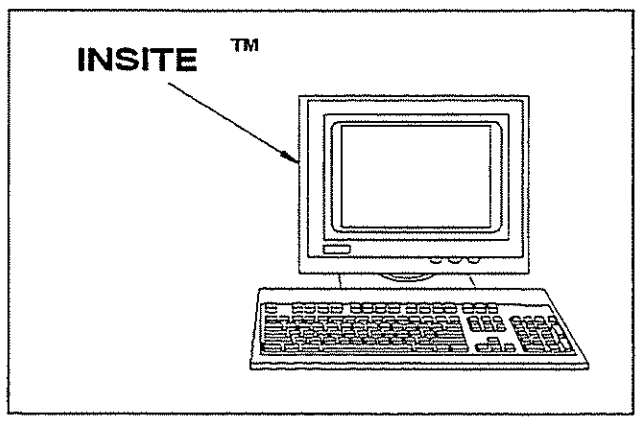

Fuel System Flow

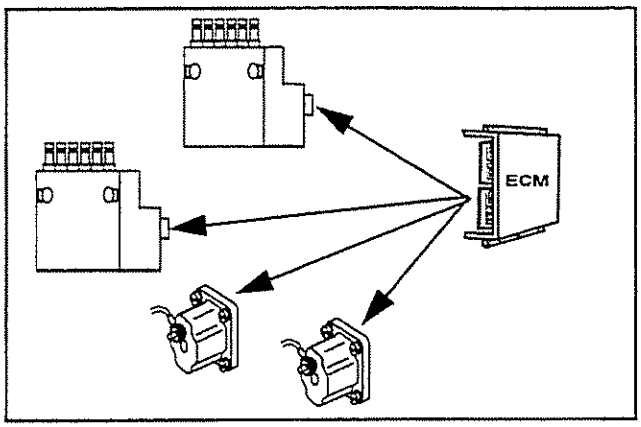

Engine idle and run speeds are programmed into the ECM module. When the engine is in the 'IDLE' or 'RUN' mode, the ECM sends electronic signals to the fuel shutoff valves and governor actuators.

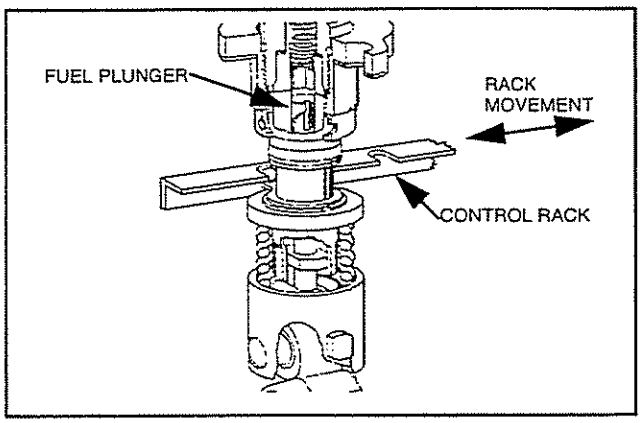

An electronic signal energizes and opens the fuel shutoff valves, allowing fuel to flow to the fuel pumps. Another electric signal energizes the actuators which forces the control racks in the fuel pumps to move. The movement of the control rack rotates the fuel plunger in each fuel pump metering the amount of fuel to the injectors.

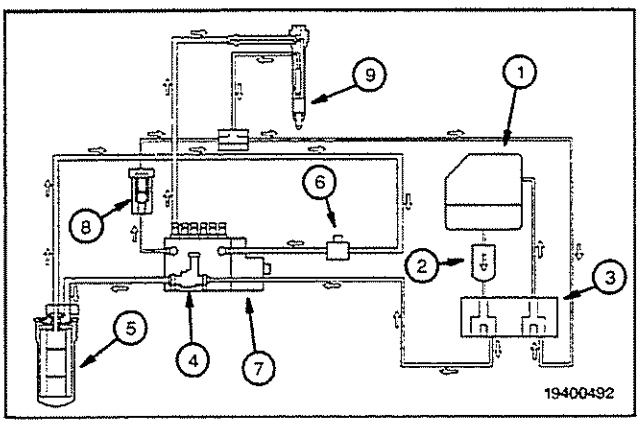

With the shutoff valves open and the governor actuators positioned for the metering of fuel, fuel is allowed to flow from the fuel tank (1) through the prefilter (2) to the fuel connection block (3). The fuel connection block distributes fuel to each fuel lift (transfer) pump.

Note: The fuel tank, prefilter and connection block are common for both engine banks. For clarity the graphic representation shows fuel flow to one bank only.

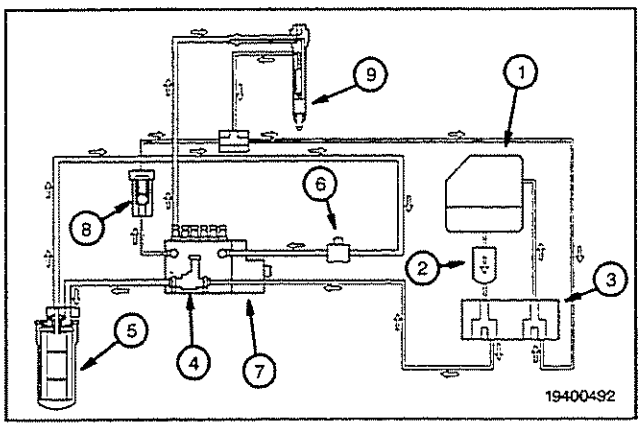

The following information applies to each engine bank: Fuel flows from the fuel connection block (3) to the lift pump (4) through the fuel filter (5) to the shutoff valve (6) and into the fuel pump (7). Fuel is metered, inside the fuel pump, to the injector where it is injected into the firing chamber. Excess fuel in the fuel pump is returned through an overflow valve (8) to the fuel connection block. The fuel connection block combines the excess fuel (from both fuel pumps and injector return lines) and returns it to the fuel tank.

When the 'RUN/STOP' switch is in the 'STOP' position, the electronic signals to the fuel shut-off valves and governor actuators are removed (zero voltage).

The shutoff valve(s) is an ON/OFF (open/closed) spring loaded valve. Without sufficient supply signal voltage, the spring in the valve(s) returns it to the CLOSED position. When in the closed position, fuel can not pass through the valve.

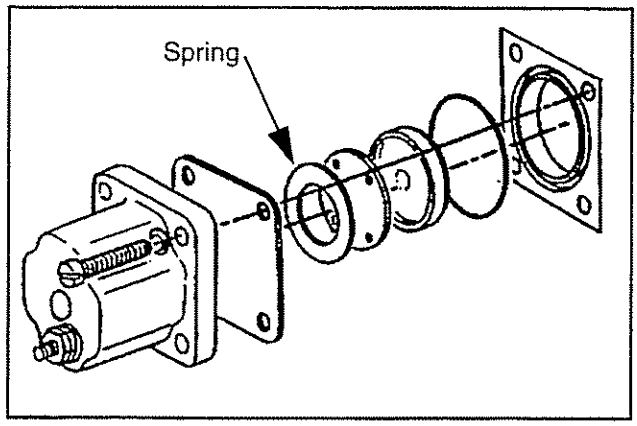

Without RUN or IDLE governing voltage, the return spring in the governor actuator(s) will return the fuel rack(s) to the zero fueling position stopping fuel flow to the injectors.

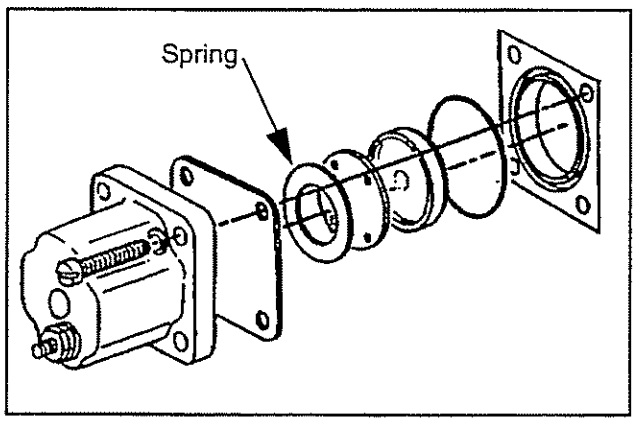

Fuel Pump Replacement (with coupling drive)

Rotate the engine slowly in a clockwise direction to align the timing mark (as stated on the data plate) on the crankshaft damper with the timing pointer. Ensure that the #1 cylinder (right bank) is on the compression stroke.

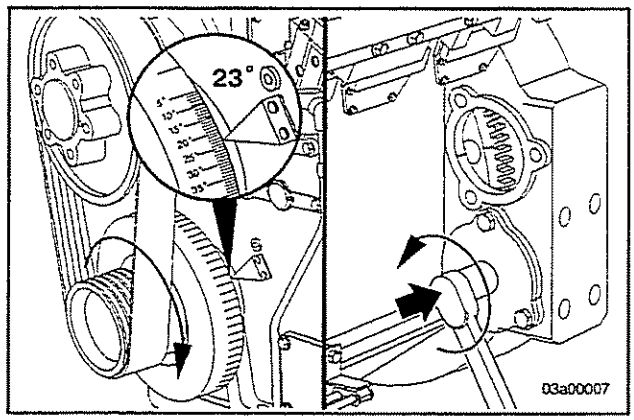

Lock Fuel Pump Timing (coupling drive)

Clean the debris from around the fuel pump timing pin cap. Remove cap (2), sealing washer (3) and timing pin (1). Reverse the timing pin and re-install in the locked position. Install cap and sealing washer.



Torque Value

Timing Pin Cap	30 N·m [22 ft-lb]

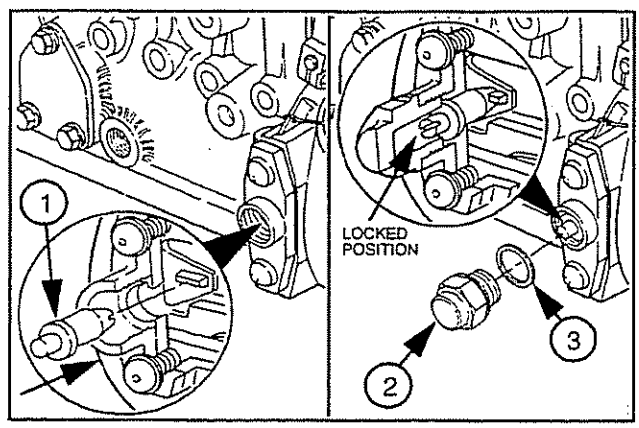

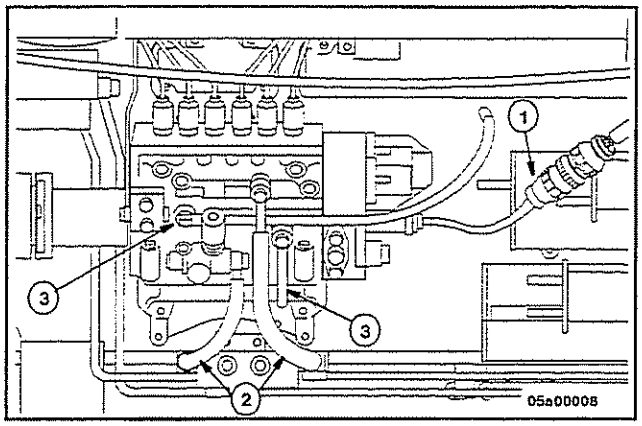

Fuel Pump Removal (coupling drive)

Clean the debris from around the in-line fuel injection pump. Disconnect the electrical connection (1), low pressure fuel lines (2) and oil lines (3).

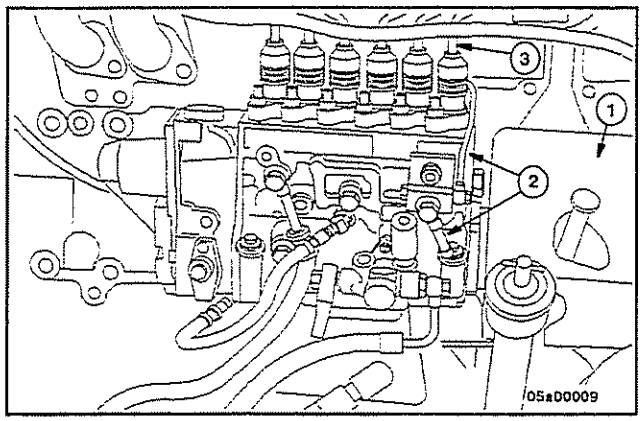

Remove the injection pump drive shaft cover (1). Disconnect the fuel pump drain line and fuel return tube (2) and the high pressure fuel lines (3).

Install protective covers to prevent any dirt or dust from getting into the discharge ports of the injection pump.

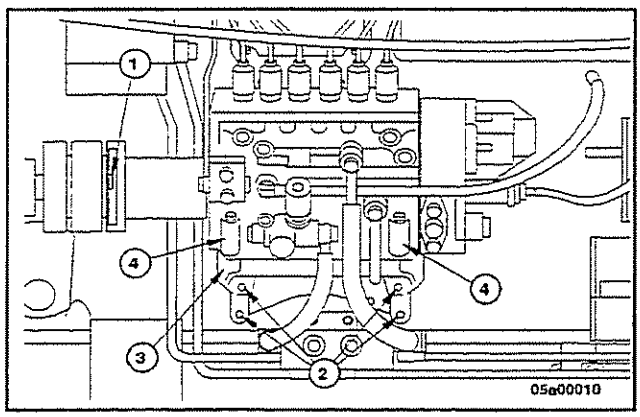

To remove the injection pump assembly from the engine:

- Disconnect the coupling bolts (1).
- Loosen the four injection pump bracket mounting bolts (2).
- Remove the injection pump and bracket (3) at an angle as one unit.
- Separate the fuel pump from the bracket by removing the mounting bolts (4).

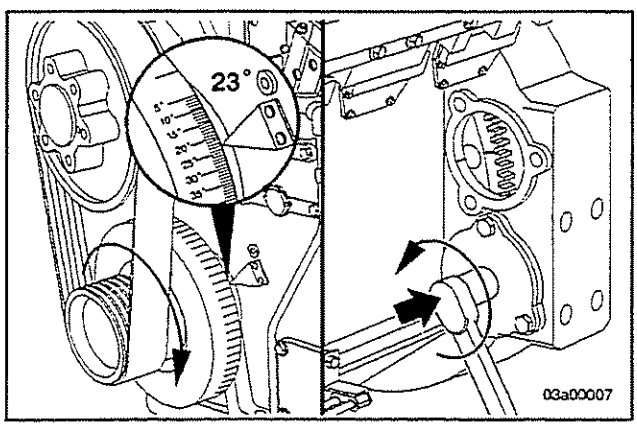

Fuel Pump Installation (coupling drive)

Rotate the engine slowly in a clockwise direction to align the timing mark (as stated on the data plate) on the crankshaft damper with the timing pointer. Ensure that the #1 cylinder (right bank) is on the compression stroke.

Note: Both the right bank and left bank fuel pumps are installed with the engine in this position.

Remove the fuel injection pump timing pin cap and verify that the pump is locked.

Install the timing pin (1), cap (2) and sealing washer (3).

Torque Value

Timing Pin Cap 30 N·m [22 ft-lb]

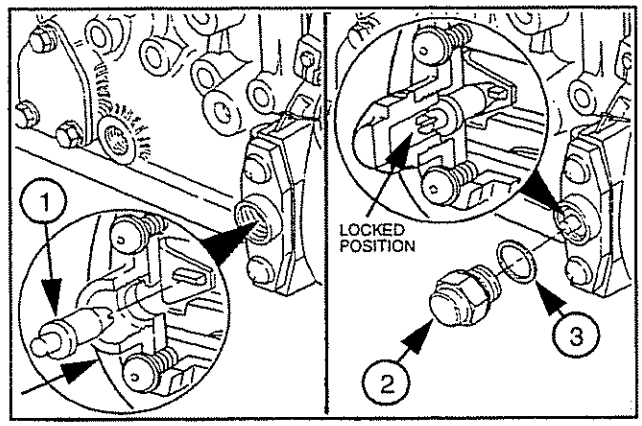

Set the in-line fuel injection pump assembly in position. With the bracket partially installed on the fuel pump, set the assembly (3) at an angle and install on the engine. Tighten the four injection pump bracket mounting bolts (2) and four pump mounting bolts (4). Tighten the coupling bolts (1).

Torque Values

Pump Mounting Bolts	66 N·m [49 ft-lb]
Bracket Mounting Bolts	66 N·m [49 ft-lb]
Coupling Bolts	108 N·m [80 ft-lb]

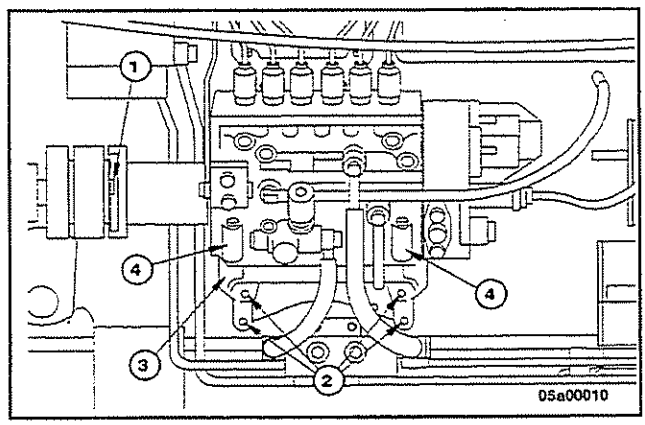

Install the high pressure fuel lines (3)

Torque Value

24 N·m [17 ft-lb]

Install the fuel pump drain line and fuel return tube (2).

Torque Value

9 N·m [80 in-lb]

Install the injection pump drive shaft cover (1).

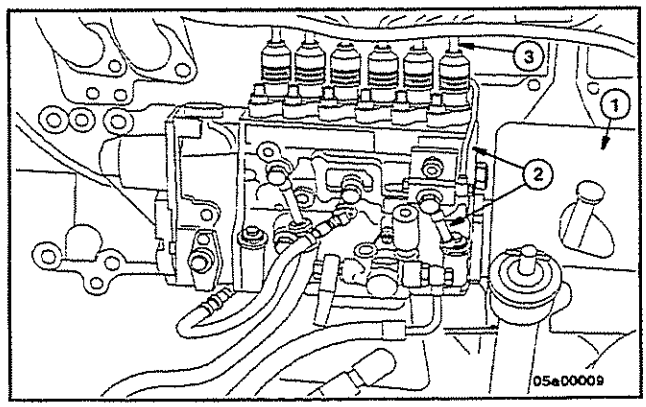

Install the low pressure fuel lines (2).

Torque Value

24 N·m [17 ft-lb]

Install the oil lines (3).

Torque Value

27 N•m [20 ft-lb]

Install the electrical connection (1).

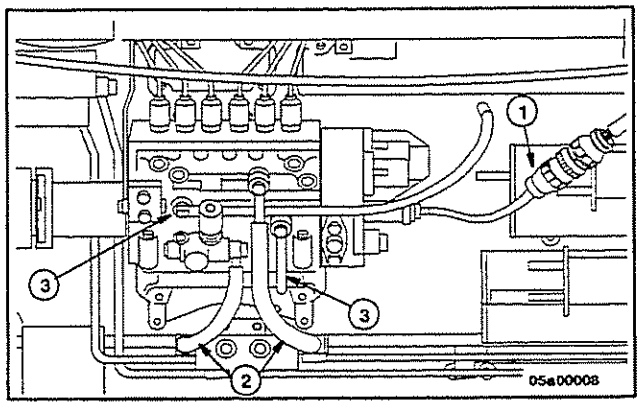

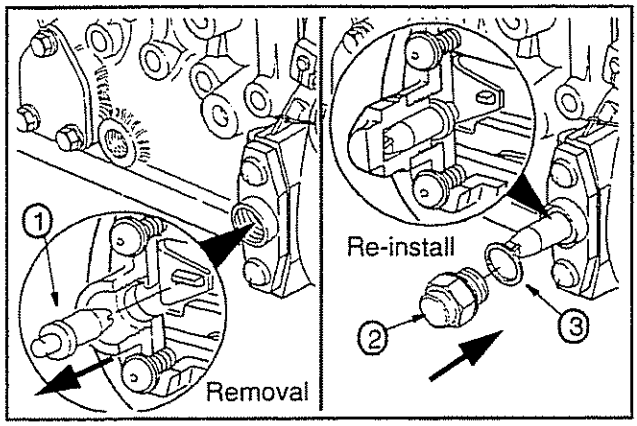



Unlock Fuel Pump Timing (coupling drive)

⚠ CAUTION ⚠

Severe damage to the fuel pump will occur unless the fuel pump is unlocked prior to operation.

Remove the fuel pump timing pin cap (2), sealing washer (3) and timing pin (1). Reverse the timing pin and re-install in the unlocked position. Install cap and sealing washer.

Torque Value

Timing Pin Cap	30 N·m [22 ft-lb]

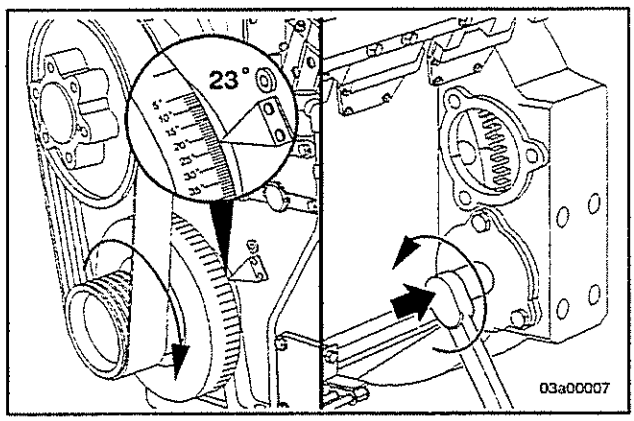

Fuel Pump Replacement (with flange drive)

Rotate the engine slowly in a clockwise direction to align the timing mark (as stated on the data plate) on the crankshaft damper with the timing pointer. Ensure that the #1 cylinder (right bank) is on the compression stroke.

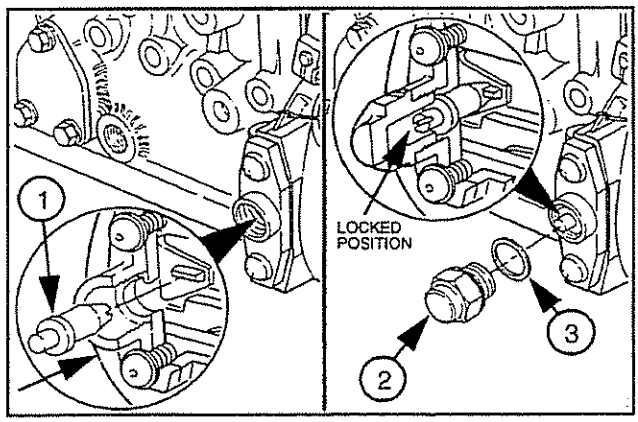



Lock Fuel Pump Timing (flange drive)

Clean the debris from around the fuel pump timing pin cap. Remove cap (2), sealing washer (3) and timing pin (1). Reverse timing pin and re-install in the locked position. Install cap and sealing washer.

Torque Value

Timing Pin Cap	30 N·m [22 ft-lb]

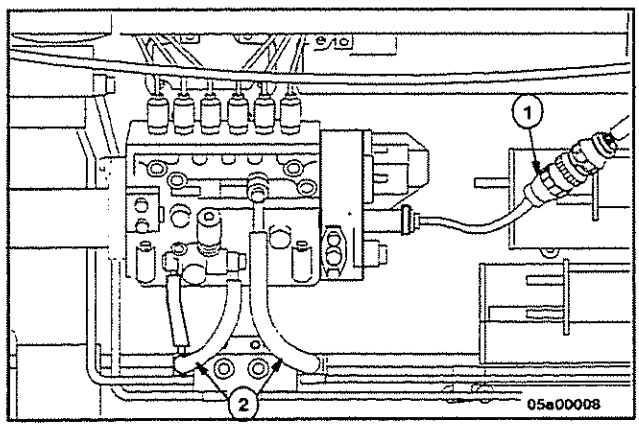



Fuel Pump Removal (flange drive)

Clean the debris from around the in-line fuel injection pump. Disconnect the electrical connection (1) and low pressure fuel lines (2).

Disconnect the fuel pump drain line (1) and the high pressure fuel lines (2).

Install protective covers to prevent any dirt or dust from getting into the discharge ports of the injection pump.

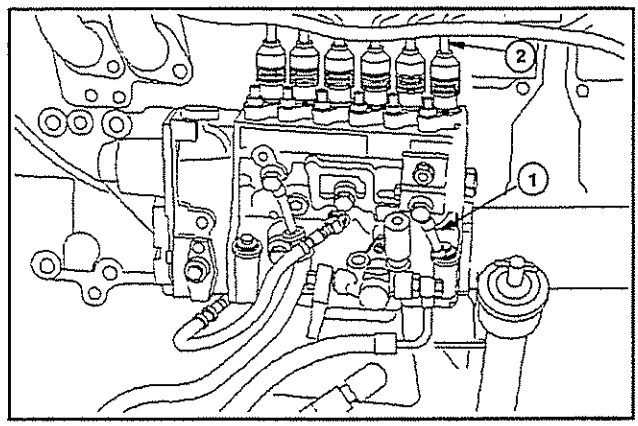

To remove the injection pump from the engine:

Remove the four capscrews (1), washers and nuts holding the pump to the drive housing.

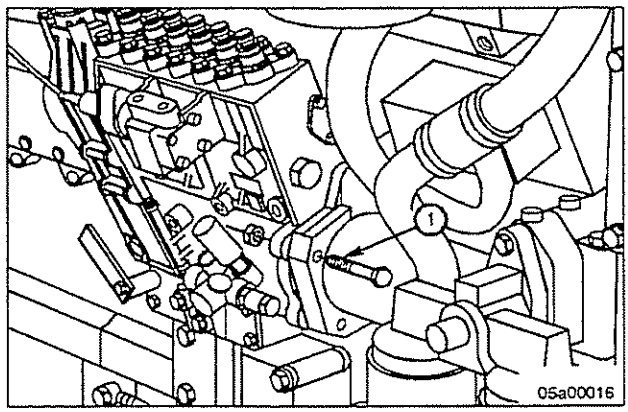

Remove the two front injection pump bracket mounting capscrews(1).

Remove the two bottom injection pump bracket mounting capscrews (2).

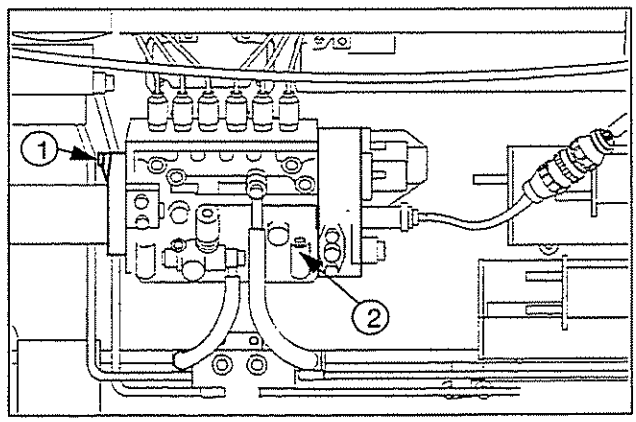

Remove the pump from the drive housing.

Disengage and remove the spline coupling from the pump driveshaft gear prior to delivery to the repair location. Use a standard 3 jaw puller kit if necessary.

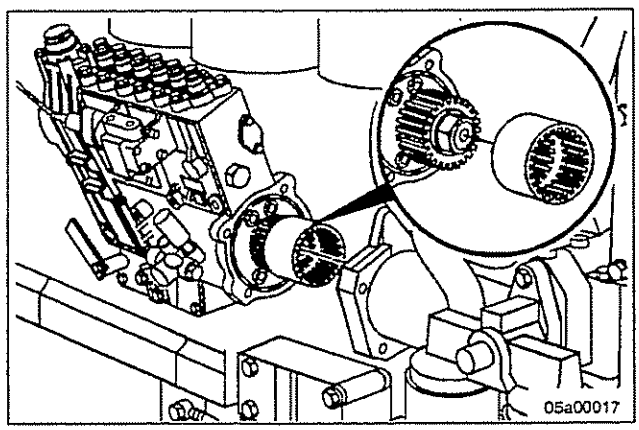

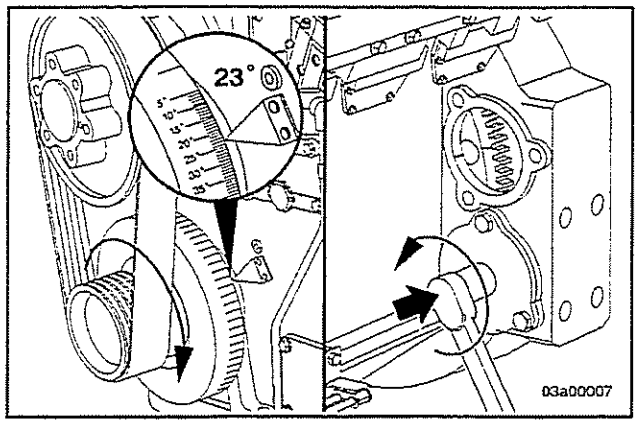

Fuel Pump Installation (flange drive)

Rotate the engine slowly in a clockwise direction to align the timing mark (as stated on the data plate) on the crankshaft damper with the timing pointer. Ensure that the #1 cylinder (right bank) is on the compression stroke.

NOTE: Both the right and left bank fuel pumps are installed with the engine in this position.

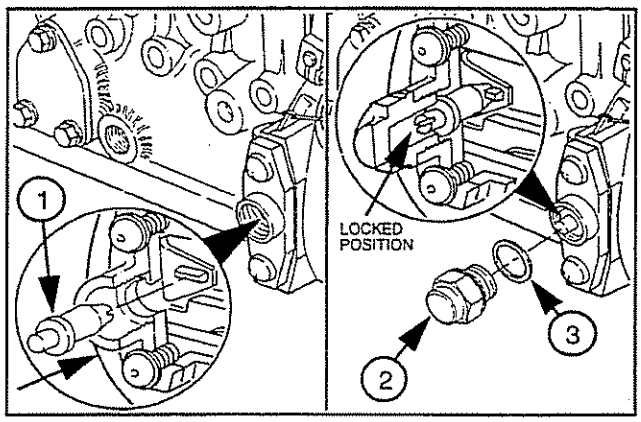

Remove the fuel injection pump timing pin cap and verify that the pump is locked.

Install the timing pin (1), cap (2) and sealing washer (3).

Torque Value

Timing Pin Cap 30 N·m [22 ft-lb]

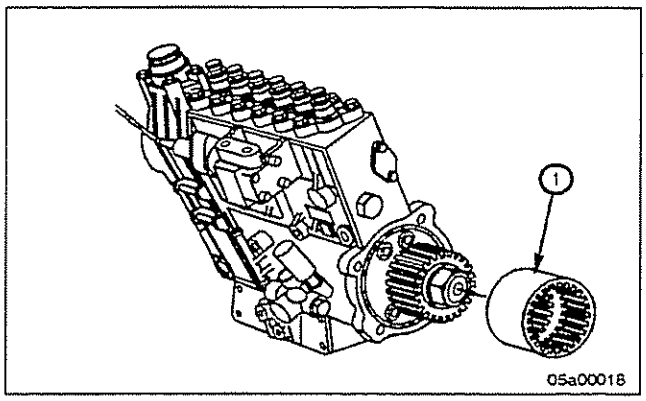

Install the spline coupling (1) onto the pump driveshaft gear.

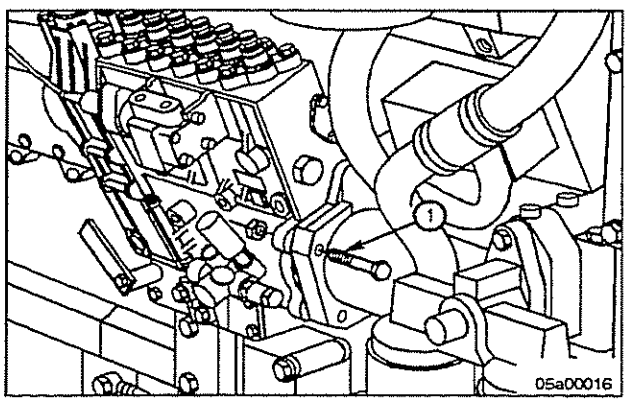

Engage the spline coupling and install the pump driveshaft gear into the drive housing.

⚠ CAUTION ⚠

If the pump does not align, do NOT force the pump and driveshaft into alignment. Forcing will result in fuel pump damage.

Note: The injection pump assembly **must** be at an angle to the engine block and properly aligned with the front and bottom pump support brackets mounted to the engine block.

If the pump does not align, remove the cover plate on the front gear cover to gain access to the fuel pump drive gear.

Note: The fuel pump drive gear is a two-piece gear, secured by four capscrews. One of the four capscrews will be hidden from view by the larger idler gear.

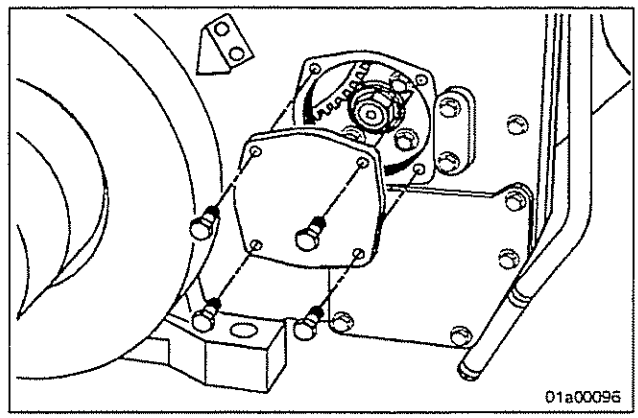

Before loosening **any** of the capscrews, rotate the crankshaft in the opposite direction of rotation until the fourth capscrew appears.

Loosen this capscrew **only** and tighten finger-tight **only.**

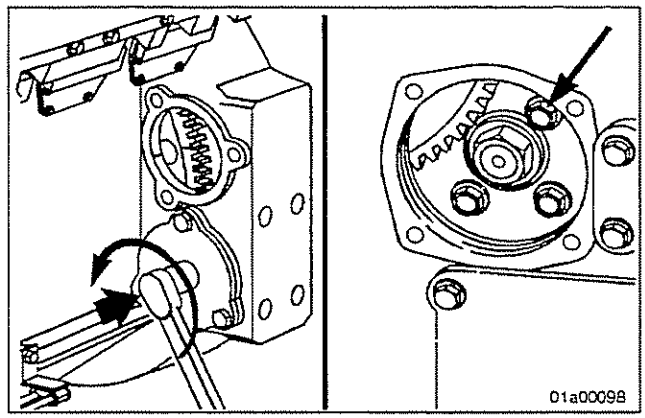

Rotate the engine clockwise until the crankshaft damper pointer aligns with the specified engine timing on the data plate.

Loosen the remaining three capscrews, then tighten finger-tight **only.**

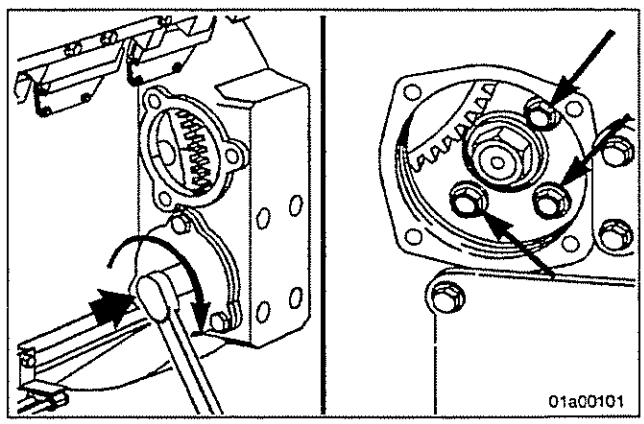

Engage the spline coupling and install the pump driveshaft gear into the drive housing.

The injection pump assembly **must** be at an angle to the engine block and properly aligned with the front and bottom pump support brackets mounted to the engine block.

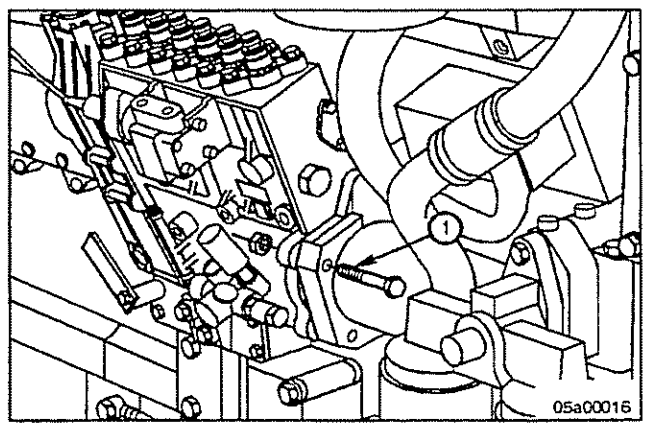

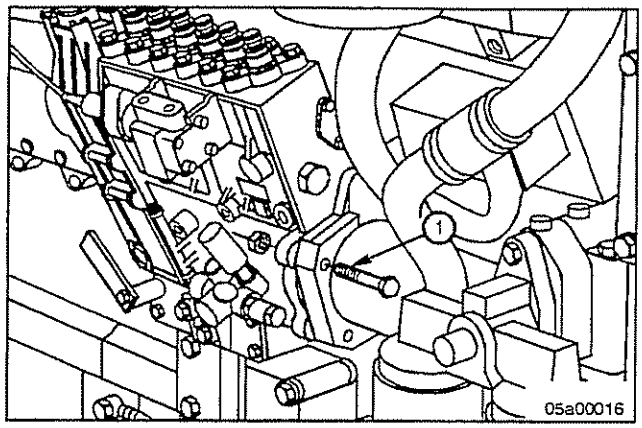



Install the four capscrews (1), washers and nuts that mount the pump to the drive housing and tighten.

Torque Value

66 N·m [49 ft-lb]

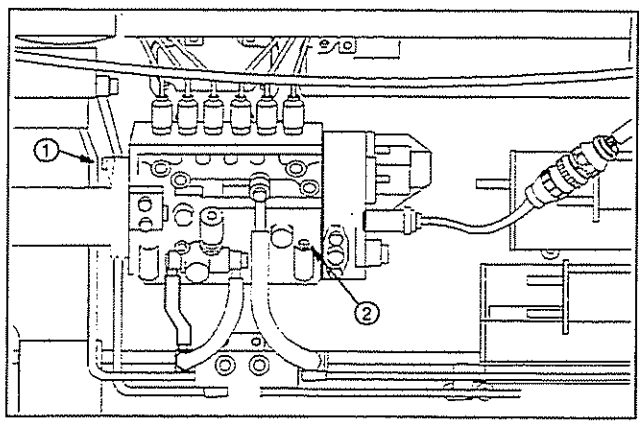



Install the two front injection pump bracket mounting capscrews (1) and tighten.

Install the two bottom injection pump bracket mounting capscrews (2) and tighten.

Torque Value

66N·m [49 ft-lb]

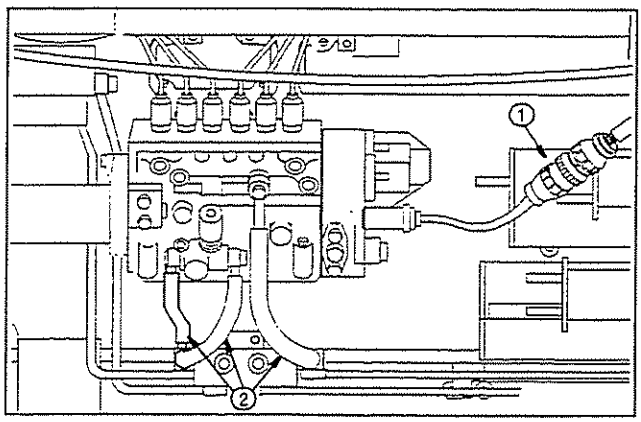



Install the low pressure fuel lines (2).

Torque Value

24 N·m [17 ft-lb]

Install the electrical connection (1).

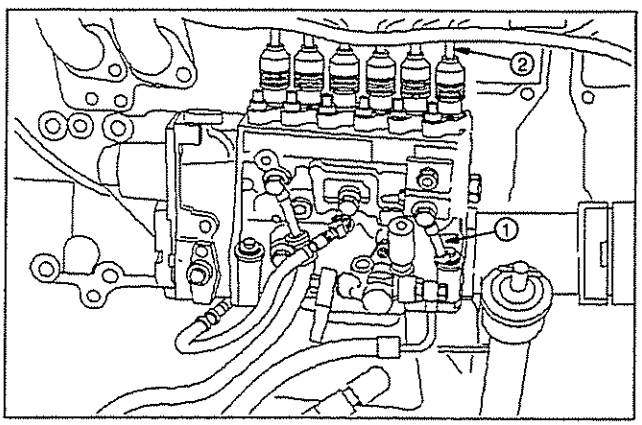



Install the high pressure fuel line (2).

Torque Value

24 N·m [17 ft-lb]

Install the fuel pump drain line (1).

Torque Value

9 N·m [80 in-lb]

Tighten the three visible capscrews in the fuel pump drive gear.

Torque Value

115 N·m [84 ft-lb]

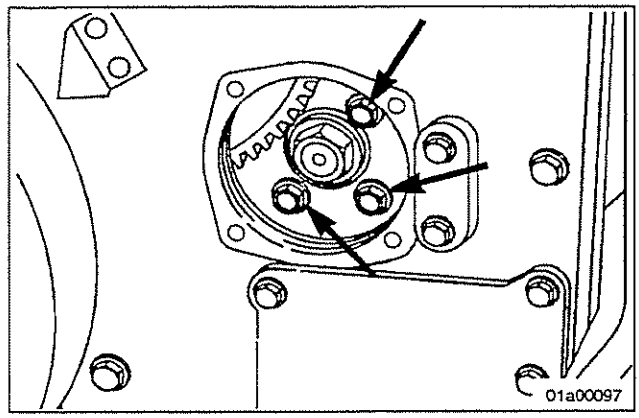

Unlock Fuel Pump Timing (flange drive)

⚠ CAUTION ⚠

Severe damage to the fuel pump WILL occur unless the fuel pump is unlocked prior to operation.

Remove the fuel pump timing pin cap (2), sealing washer (3) and timing pin (1). Reverse the timing pin and reinstall in the unlocked position. Install cap and sealing washer.

Torque Value

Timing Pin Cap 30 N·m [22 ft-lb]

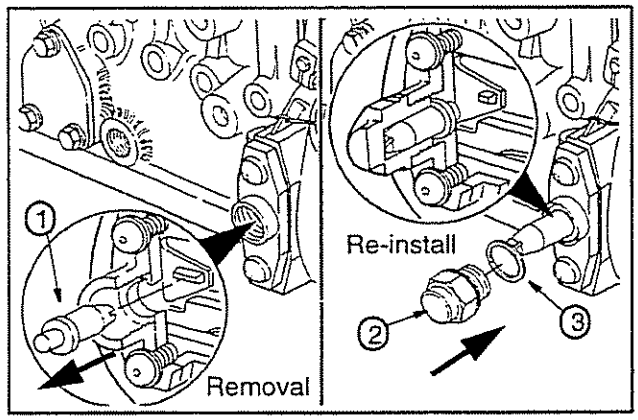

Rotate the engine one full revolution.

Tighten the fourth capscrew.

Torque Value

115 N·m [84 ft-lb]

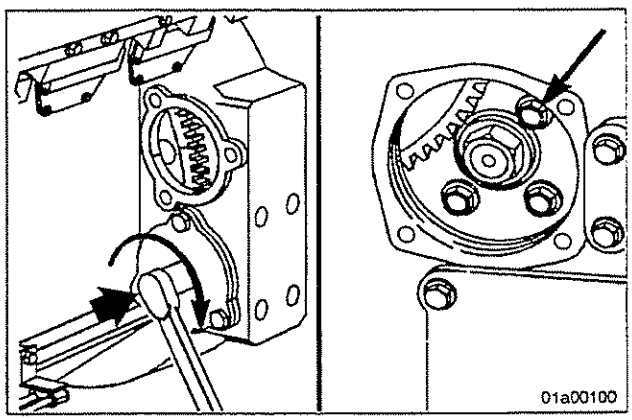

Re-Install the cover plate on the front gear cover.

Torque Value

65 N·m [48 ft-lb]

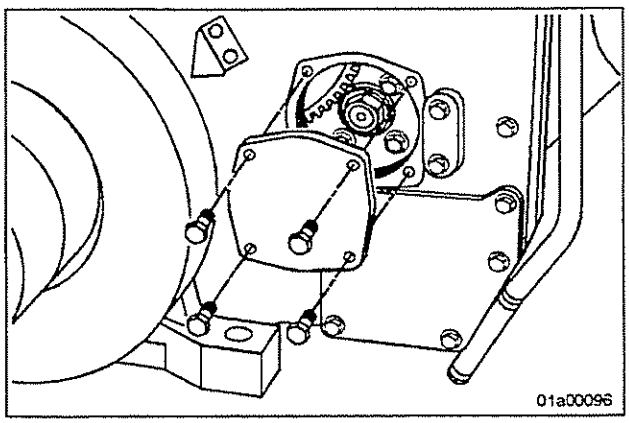

Fuel Line Venting

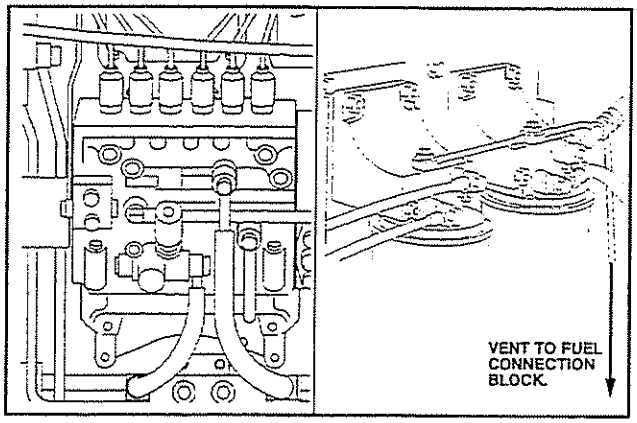

Controlled venting is provided at the fuel pump through the fuel drain manifold. Small amounts of air introduced when changing the fuel filters or fuel pump supply line will be vented automatically, if the fuel filter is changed in accordance with the instructions (O/M Manual).

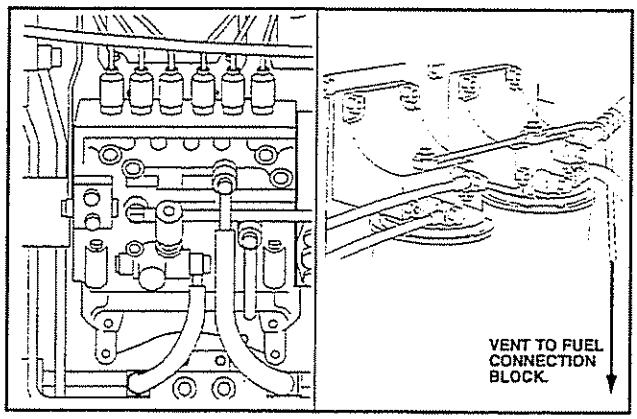

Note: Manual venting is required if:

- The fuel filter is **not** filled prior to installation.
- Fuel injection pump is replaced.
- High pressure fuel line connections are loosened or fuel lines replaced.
- Initial engine start-up or start-up after an extended period of no engine operation.
- Engine has been run until fuel tank emptied.

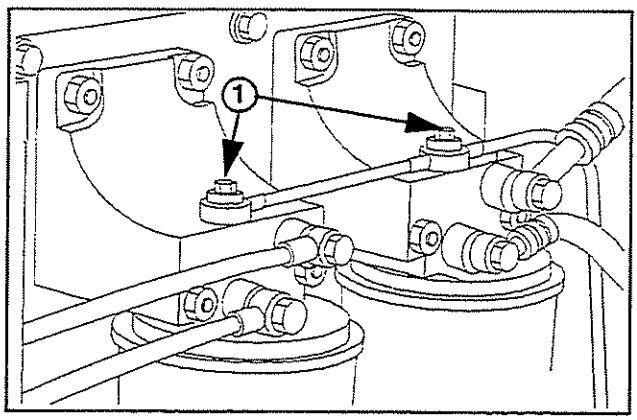

Low Pressure Fuel Line(s)

To vent the low pressure fuel lines, loosen the fuel filter head pressure relief banjo fittings (1) on top of the fuel filter head.

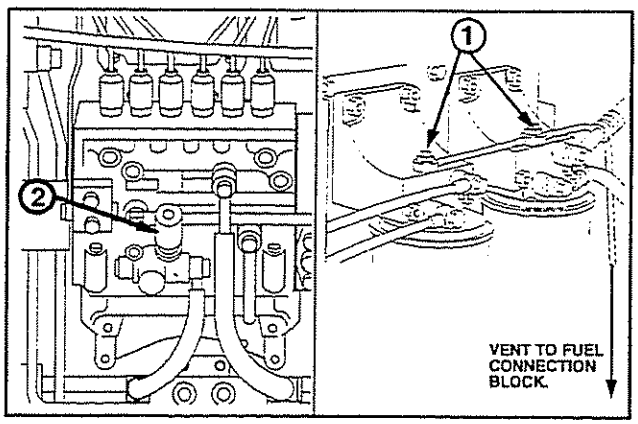

Operate the plungers (2) on the fuel lift pumps until the fuel flowing from the pressure relief fittings (1) is free of air. Tighten the banjo fittings (1).

Torque Value

8.8 N·m [6.5 ft-lb]

Pump(s)

Loosen the fuel pump galley outlet line banjo fitting(s) (3).

Either

Energize the Fuel Pump Shutoff Valves (24VDC) and operate the plunger (2) on the fuel lift pump(s) until fuel bleeds from the line,

Or

crank the engine (ensuring power is supplied to the ECM) until fuel bleeds from the line.

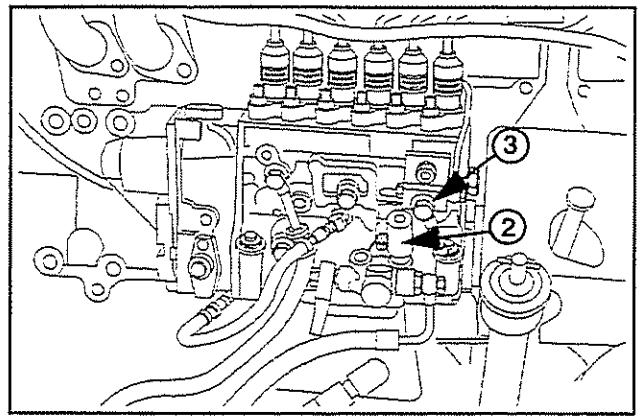

Tighten the fuel pump galley outlet line banjo fitting(s) (3).

Torque Value

23 N·m [17 ft-lb]

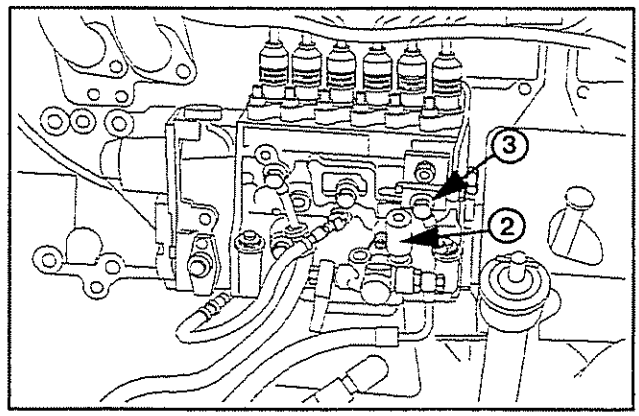

High Pressure Fuel Line(s)

⚠ WARNING ⚠

The pressure of the fuel in the line is sufficient to penetrate the skin and cause serious bodily harm. Carefully loosen the fittings to ensure there is still proper thread engagement and wear hand protection.

Loosen the fittings at the injectors. Crank the engine to allow the trapped air to bleed from the lines. Tighten the fittings.

Note: Do not engage the starter for more than 30 seconds each time when it is used to vent the system. Wait 2 minutes between engagements.

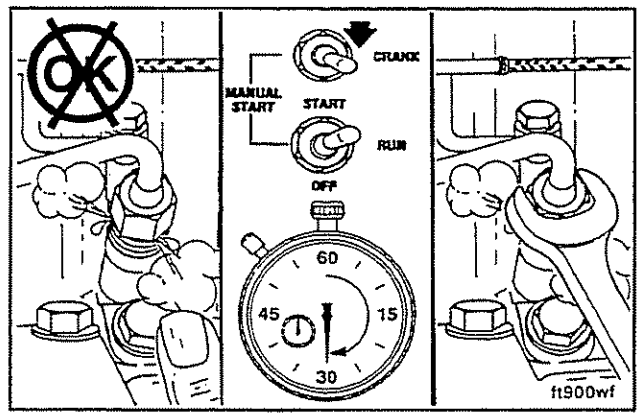

Start the engine.

⚠ WARNING ⚠

Turn the engine switch to the RUN position. Follow the engine safety precautions and the normal engine starting procedure (see page 69).

After the engine starts, vent one line at a time until the engine runs smoothly.

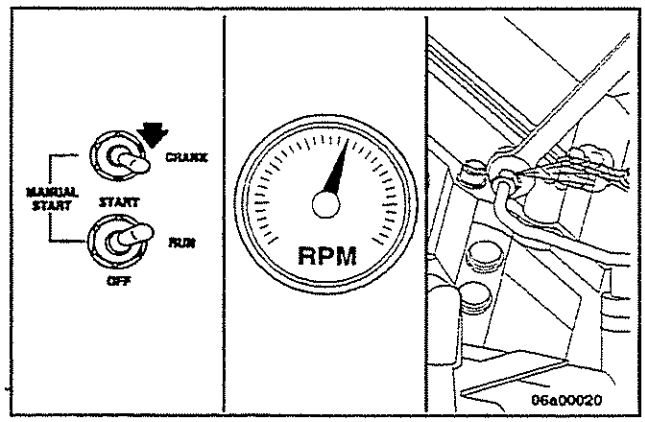

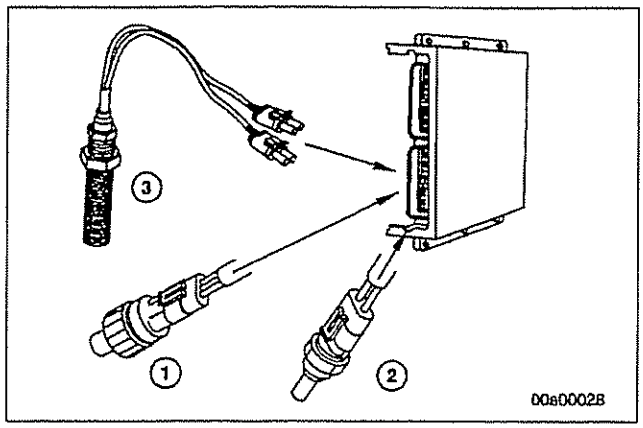

Engine Protection

The QST30 ECM provides engine protection for low oil pressure, high coolant temperature and overspeed conditions.

For a complete listing of engine protection warning, shutdown and factory defaults set-points, see Engine Protection Setpoints on page 32.

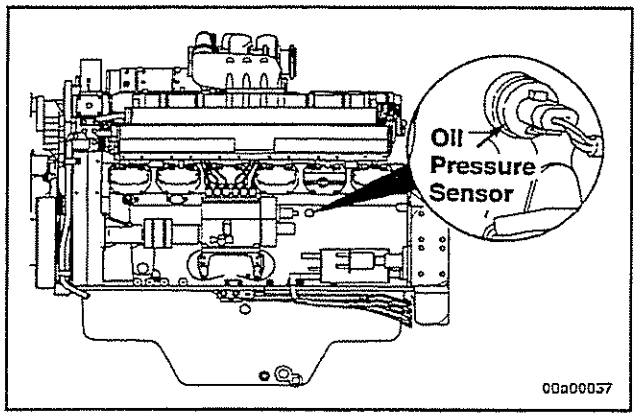

Engine Oil Pressure

The Oil Pressure Sensor (OPS) is located on the left bank side of the engine block to the rear of the fuel pump.

The OPS provides engine protection in the low lubricating oil pressure condition.

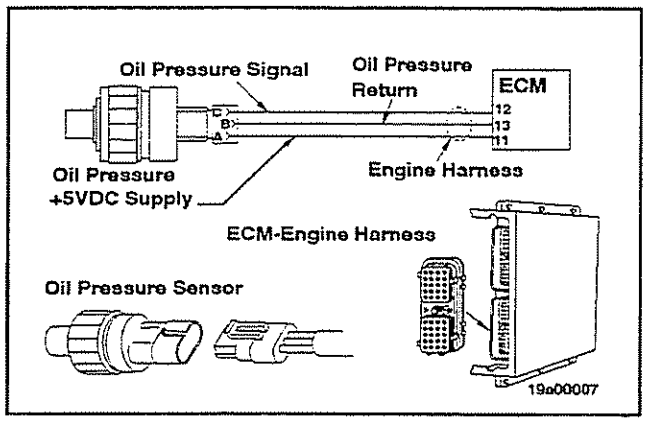

The Oil Pressure Sensor is used by the ECM to monitor the engine's lubricating oil pressure. The ECM monitors the voltage on the signal pin and converts this to a pressure value. If the OPS indicates oil pressure has fallen below the low oil pressure threshold, the engine will shut down and the Common Alarm output relay and Low Oil Pressure relay driver will energize.

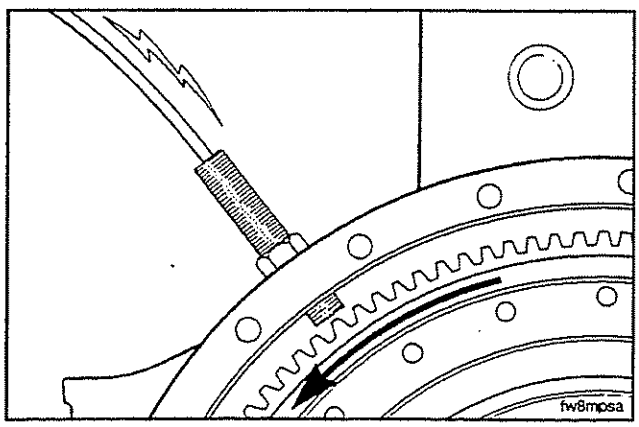

Engine Speed

The Engine Speed Sensor (ESS) is located on the left bank side of the engine in the flywheel housing.

The ESS provides engine protection in the overspeed and loss of speed signal conditions.

The Engine Speed Sensor is used by the ECM to monitor engine speed. If the ESS indicates engine speed has exceeded the engine over-speed threshold, or the ECM detects a loss of speed signal condition (<50 RPM), the engine will shut down and the Common Alarm output relay and Overspeed (if maximum RPM was exceeded) relay driver will energize.

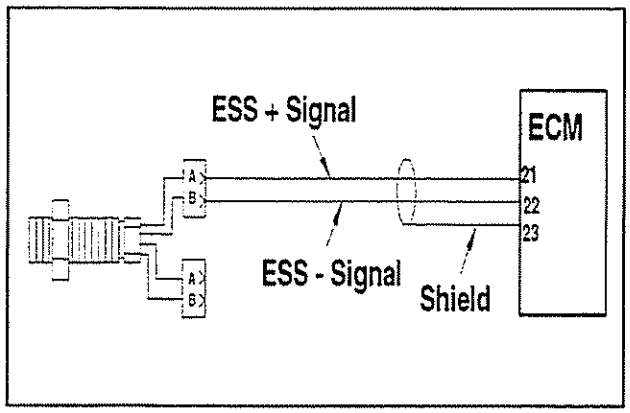

Engine Coolant Temperature

The Coolant Temperature Sensor (CTS) is located in the upper casing of the thermostat housing on the left bank side of the engine block.

The CTS provides engine protection in the high coolant temperature condition.

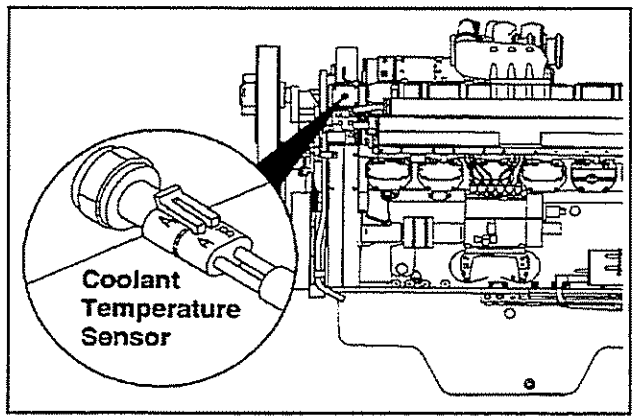

The Coolant Temperature Sensor is used by the ECM to monitor the temperature of the engine coolant. The ECM converts the voltage on the signal pin to a temperature value. If the CTS indicates the coolant has exceeded the high temperature threshold, the engine will shut down and the Common Alarm output relay and High Coolant Temperature relay driver will energize.

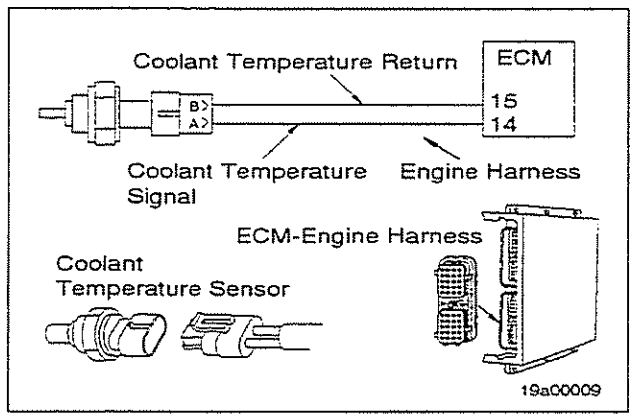

Engine Protection Setpoints

Engine Pre-Alarms (Warnings)

Engine Pre-Alarms	Adjustable Range	Default Value
Coolant Temperature Warning	-18 to 124 Deg. C [0 to 255 Deg. F]	97.2 Deg. C [207 Deg. F]
Oil Pressure Warning (Idle Speed)	0 to 689.5 kPa [0 to 100 PSI]	103.4 kPa [15 PSI]
Oil Pressure Warning (Rated Speed)	0 to 689.5 kPa [0 to 100 PSI]	275.8 kPa [40 PSI]
Fuel Pump Rack Position (vs. Commanded Rack Position)	Non-Adjustable	>0.20 VDC
High Voltage at Coolant Temperature Sensor	Existing Sensor Condition	
Low Voltage at Coolant Temperature Sensor	Existing Sensor Condition	
High Voltage at Oil Pressure Sensor	Existing Sensor Condition	
Low Voltage at Oil Pressure Sensor	Existing Sensor Condition	
Non-Critical ECM Memory Error	Existing ECM Condition	

Note: All Pre-Alarms energize the Common Warning Relay.

Engine Shutdowns (Alarms)

Engine Shutdowns	Adjustable Range	Default Value
Coolant Temperature Alarm	Non-Adjustable	105.6 Deg. C [222 Deg. F]
Oil Pressure Alarm (Idle Speed)	Non-Adjustable	68.9 kPa [10 PSI]
Oil Pressure Alarm (Rated Speed)	Non-Adjustable	275.8 kPa [35 PSI]
Engine Overspeed	1000-2070 RPM	2070 RPM
Loss of Engine Speed Signal	Non-Adjustable	< 50 RPM
Critical ECM Memory Error	Existing ECM Condition	

Note: All Engine Shutdowns energize the Common Alarm Relay.

Default Values are factory preset values that are preprogrammed into all ECMs and are the parameter settings when the customer receives the ECM (unless the customer's local ABO informs of local resetting of specific parameters).

ECM Mounting

Electronic Control Module Mounting

The ECM is provided with (6) six mounting holes. There are three mounting holes on each rail, 6 mm in diameter and 75 mm apart. The hole distance between rails is 191 mm.

The ECM unit has a mass of 2.7 kg [6 lb].

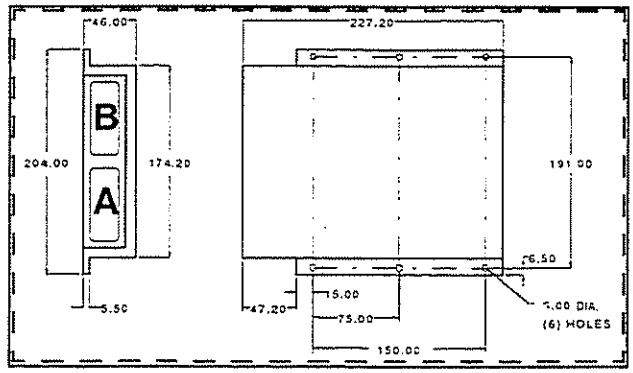

How to Mount the ECM

Determine the location for the ECM. Ensure that there is sufficient clearance for the wiring harnesses to be mounted to the ECM.

- Use all 6 mounting holes.
- Either machine and tap, or drill thru clearance holes for capscrews and nuts to secure the ECM to the mounting surface.

⚠ CAUTION ⚠

Make sure there is no grease or dirt on the ECM mounting surfaces. Properly tighten the 6 capscrews per the capscrew size/ grade torque recommendations to prevent mounting failures.

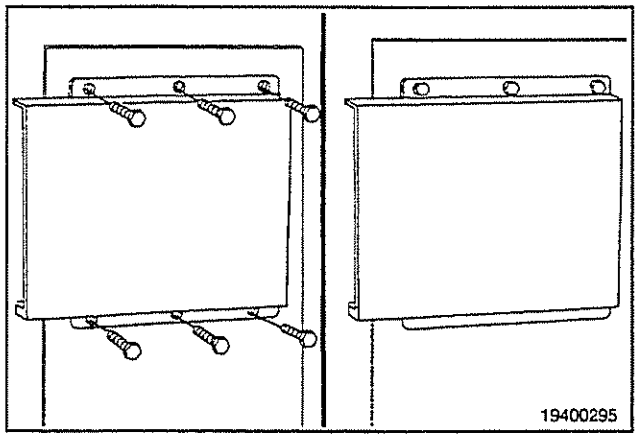

Where Not to Mount ECM

Do not mount the ECM directly to the engine block or to any engine block component without proper thermal and/or vibratory isolation.

The ECM is **NOT** certified for block temperatures and vibration spectrums.

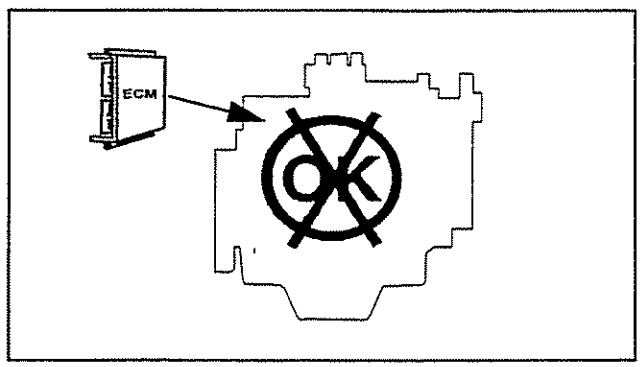

Engine Wiring Extension Harnesses

The ECM may be mounted up to 15.2 m [50 ft.] (total harness length) from the engine harness at the flywheel housing. Various extention harness lengths are available and may be combined to make up to a total of 15.2 m.

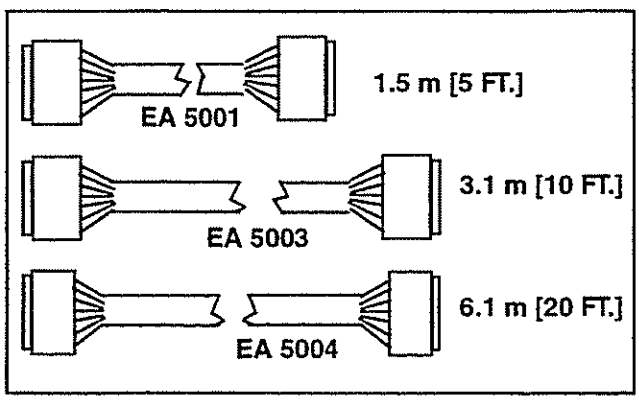

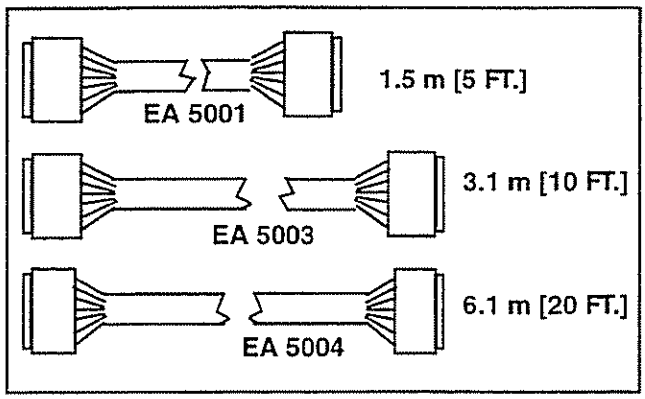

Every engine is supplied with a 1.5 m [5 ft.] ECM harness (included with the ECM). This harness interfaces the engine and/or extension harnesses to the ECM connector. This harness (in the ECM kit) must be included as part of the total 15.2 m of harness length (1.5m ECM harness plus up to 13.7 m [45 ft.] in extension harnessing equals 15.2 m maximum total harness length).

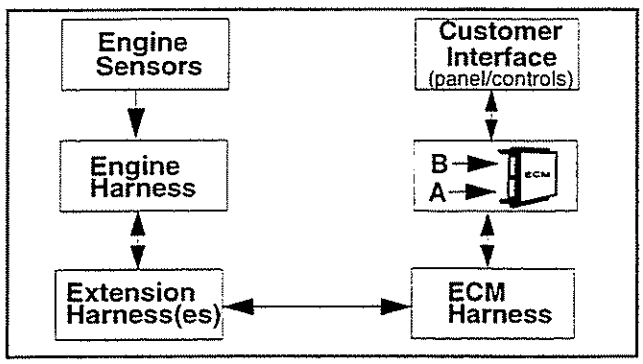

System Description

The QST30 G-Drive speed governing system consists of the ECM speed governor; ECM, engine and extension (when utilized) harnesses; engine water temperature, oil pressure and speed sensors; and customer supplied controls.

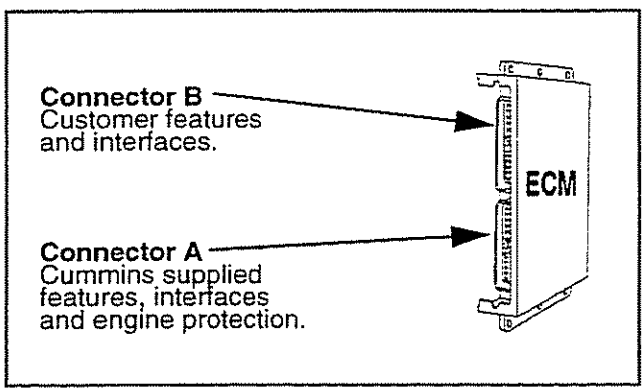

ECM Connectors

Cummins engine control and monitor functions are supplied between the engine harness and the ECM through Connector A.

Customer features and interfaces are obtained through connector B of the ECM.

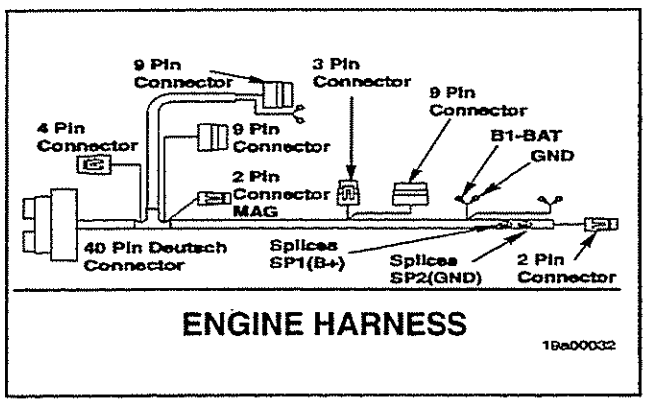

Engine Wiring

Engine Wiring Harness

Every Cummins QST30 G-Drive engine is shipped with a factory mounted engine wiring harness and a kit consisting of the ECM (for customer mounting) and ECM harness (which contains the A harness connector which mates with the ECM A connector).

The engine wiring harness provides the interface between the engine sensors and the ECM for sensor inputs. It also provides the interface between the ECM and the engine to govern speed and, when necessary, to shut down the engine for engine protection.

The engine wiring harness is connected to the engine control module through Connector A of the ECM (via engine extension harnessing and the ECM harness).

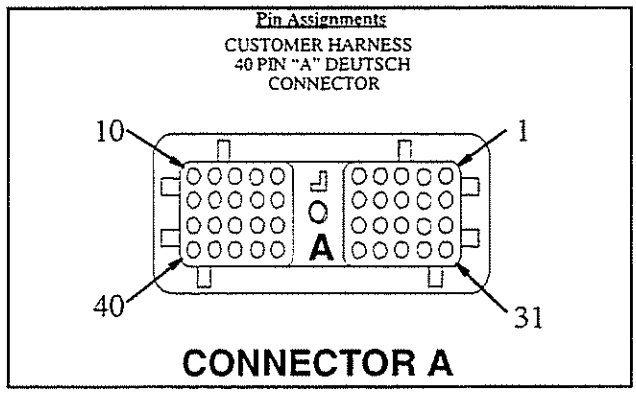

Fuel Shutoff Valves (FSOV)

The ECM provides +24VDC to both the left and right bank fuel shutoff valve solenoids (under proper running conditions) through pins 39 and 40.

The FSOV solenoid ground post is only used on Isolated Ground solenoids. (See wiring diagram on page 37 for proper hookup).

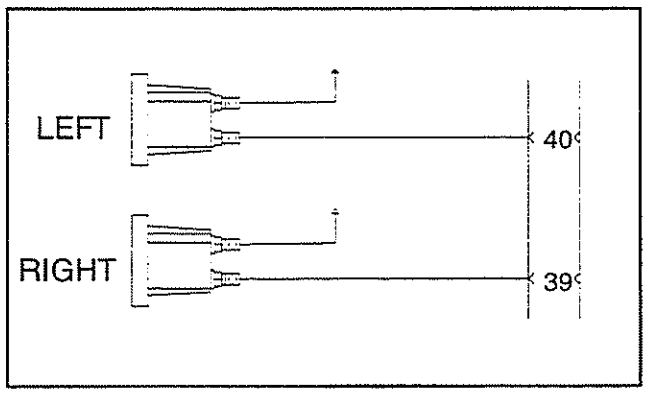

Datalink Connector

Pins 31, 32, 33 and 34 are used to transfer data between the ECM and the PC electronic Service Tool (via a 9 pin round Deutsch connector).

PC Service Tool	P/N 3825145
PC Serial Port Interconnect Cable	P/N 3825183

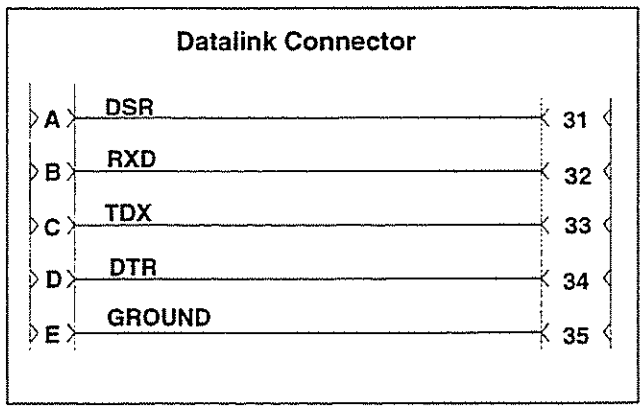

Fuel Pump Connector, Left Bank

Pin 5 is a signal supplied to the ECM.

Pins 3 and 6 are returns to the ECM.

Pins 1 and 7 are power and signals supplied by the ECM.

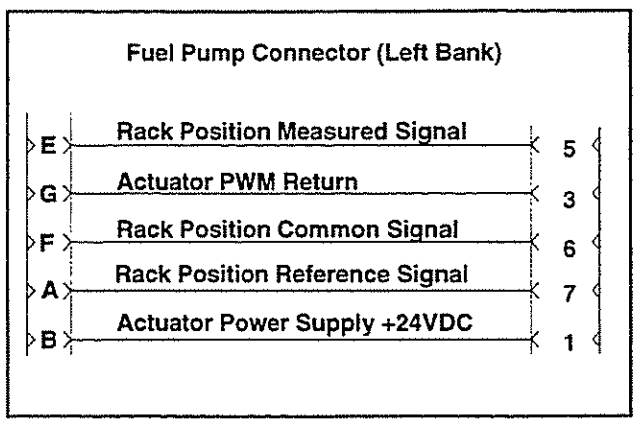

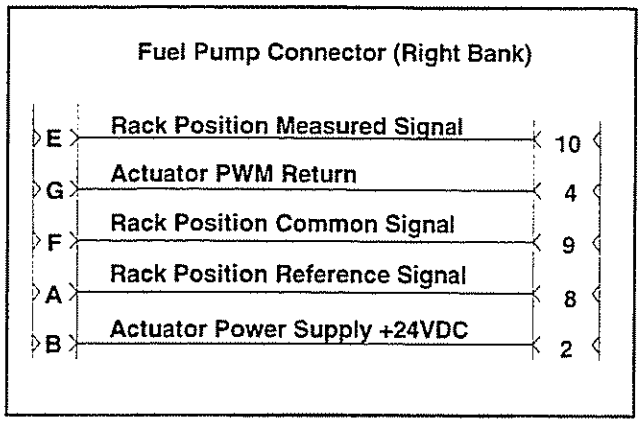

Fuel Pump Connector, Right Bank

Pin 10 is a signal supplied to the ECM.

Pins 4 and 9 are returns to the ECM.

Pins 2 and 8 are power and signals supplied by the ECM.

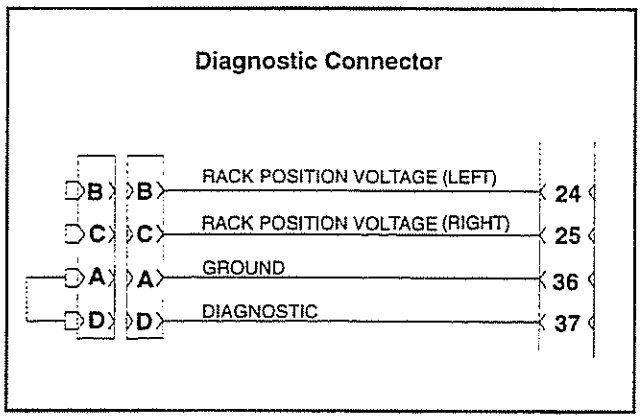

Diagnostic Connector

For the ECM to enter diagnostic mode, the diagnostic input (D) must be left open with respect to ground (A).

For discussion on diagnostic mode, see the INSITE™ for QST30 G-Drive (PC Service Tool) User's Manual, Bulletin No. 3666196.

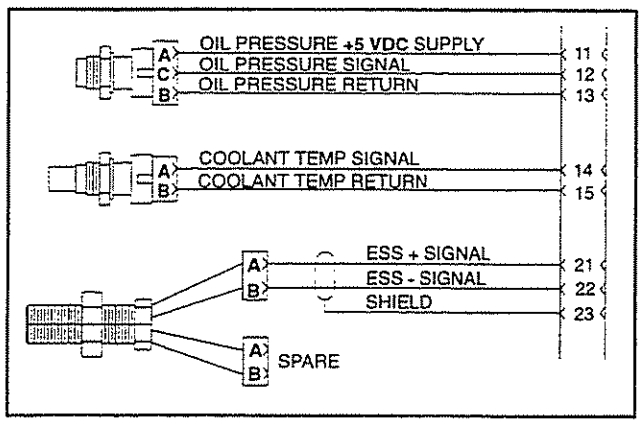

Engine Sensors

The engine harness connects reference and sensor signals between the ECM and Oil Pressure, Coolant Temperature and Engine Speed sensors through their corresponding pins.

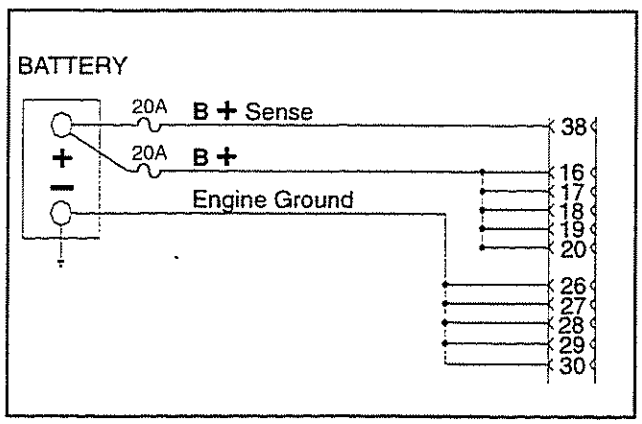

Power Supply and Ground

The engine harness provides B+ (un-switched +24VDC) power, B+ Sensing voltage and Battery Ground to the ECM.

QST30 G-DRIVE WIRING DIAGRAM
ENGINE HARNESS

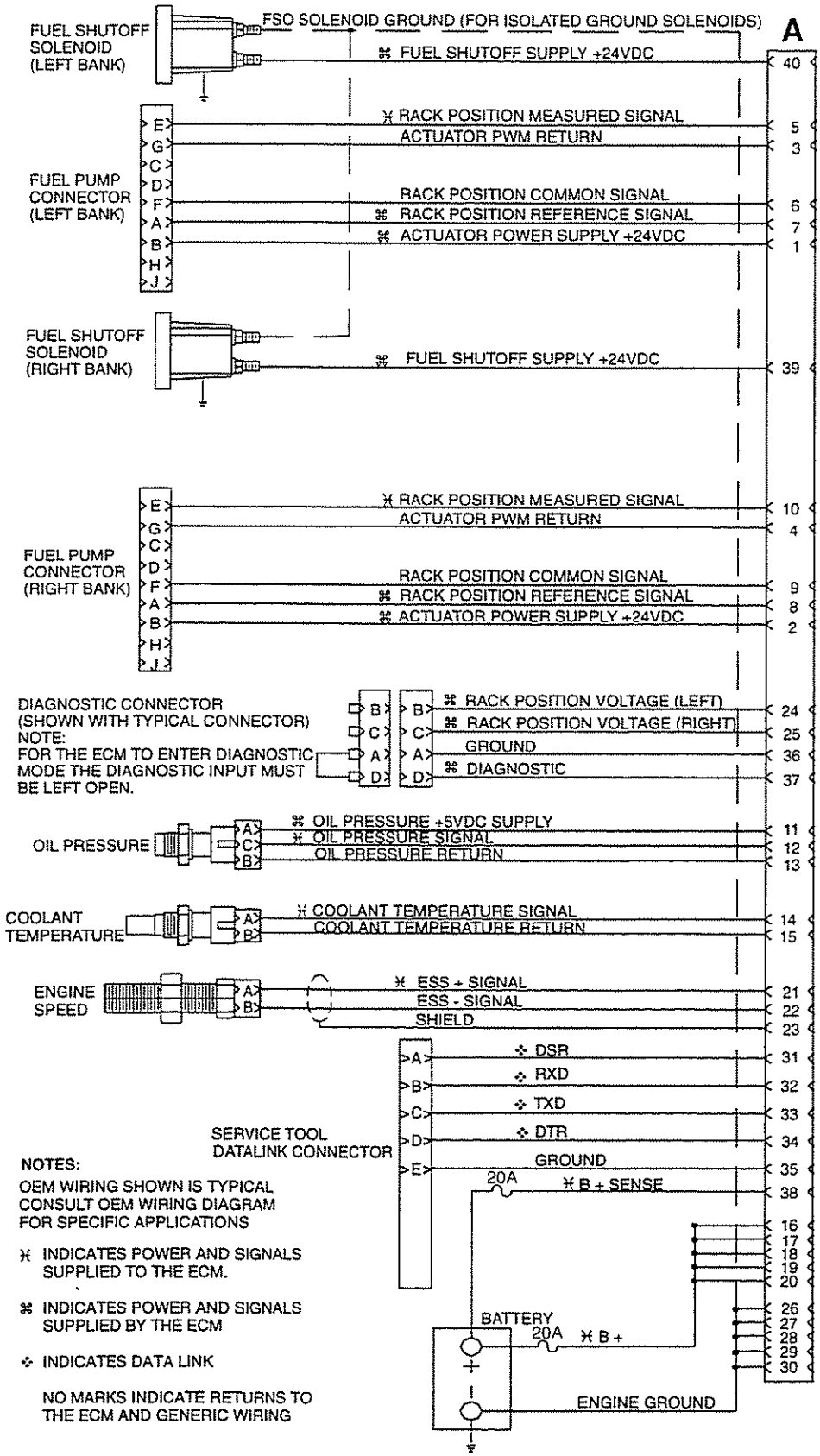

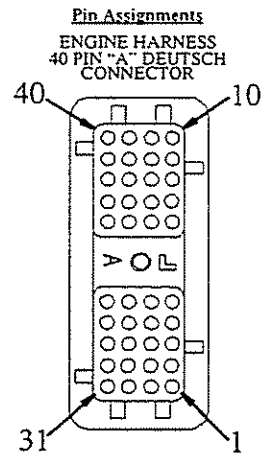

CONNECTOR A

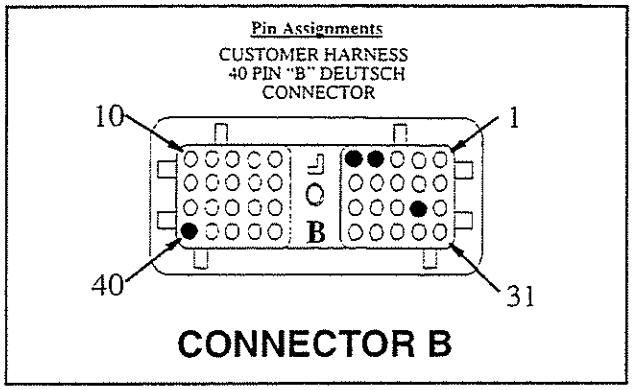

Customer Wiring

Customer features and interfaces are obtained through Connector B of the ECM. It is the customer's responsibility to build a wiring harness utilizing the B Connector. This wiring harness is limited to 15.2 m [50 ft.] total length, from the ECM to the customer controls.

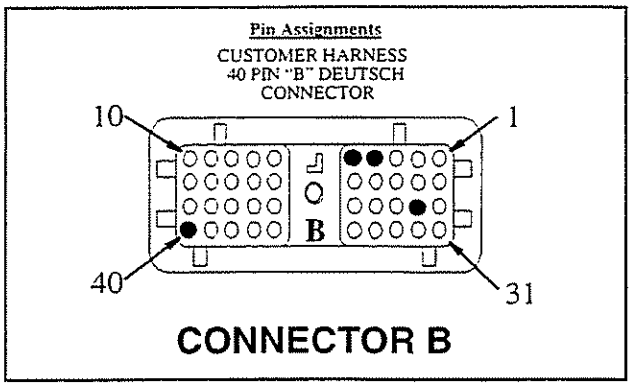

B Connector Information

	Deutsch P/N	Cummins P/N
B Connector	DRC26-40SB-L011	3621208
Connector Socket	0462-201-20141	3656990
Cavity Plugs	0413-204-2005	3657034

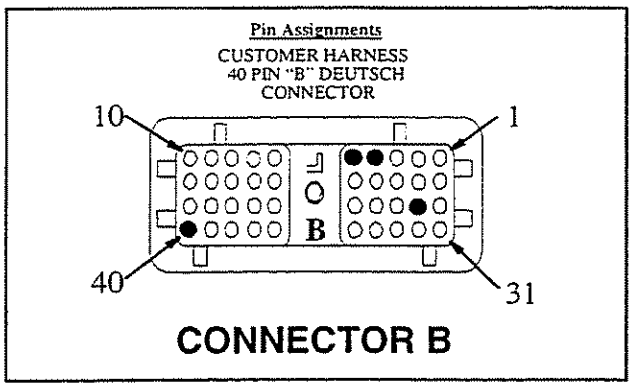

B Connector Kits

Option Kit No.: EA 5005
Service Kit P/N: 3092340

Note: Kits contain a 40-pin Deutsch "B" connector, 40 sockets and 40 cavity plugs for customer build.

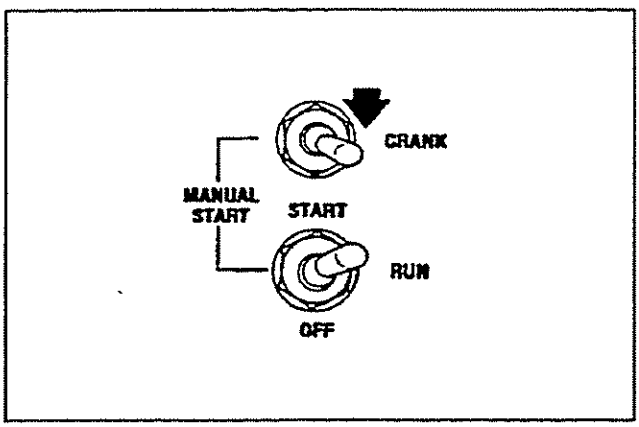

Start and Crank Circuit

It is the responsibility of the customer to provide their own Start and Crank circuit. See Cummins G-Drive Installation Guidelines for starting and cranking electrical circuits.

Run/Stop Switch

A customer supplied Run/Stop input supplies 24VDC Battery Positive (switched B+) to pin 24. B+ supplied to pin 24 allows the ECM to energize the FSOVs when cranking and to govern the engine speed when speed increases to >400 RPM.

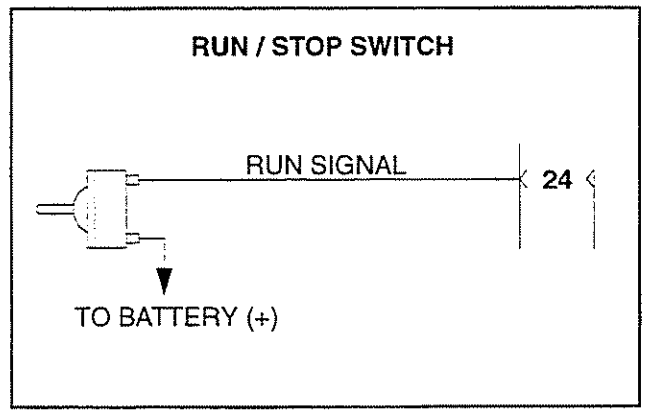

Idle/Rated Speed Switch

Idle speed mode is selected by grounding pin 3 via a customer supplied Idle/Rated switch. Idle or Rated speed mode can also be selected via the electronic Service Tool.

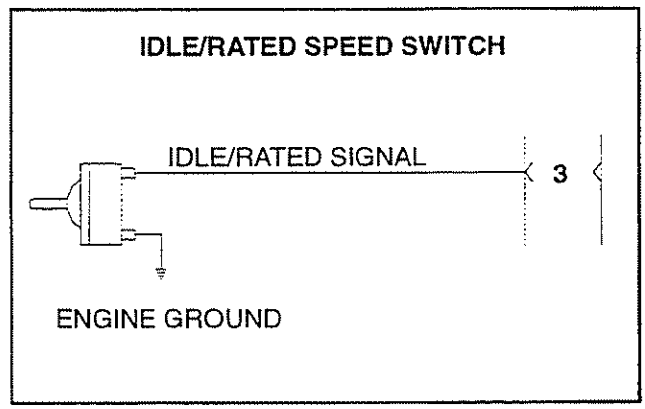

Remote Speed Adjust Potentiometer

A customer supplied 5,000 ohm potentiometer provides for ± 6% engine speed adjustment around engine Run speed (Run speed = 1500 or 1800 RPM). Pin 12 is for the potentiometer's center wiper.

Note: The ECM must be calibrated (via the electronic Service Tool) to recognize if a remote speed adjust pot is being utilized between pins 11 through 13 (Remote Speed Adjust Enable).

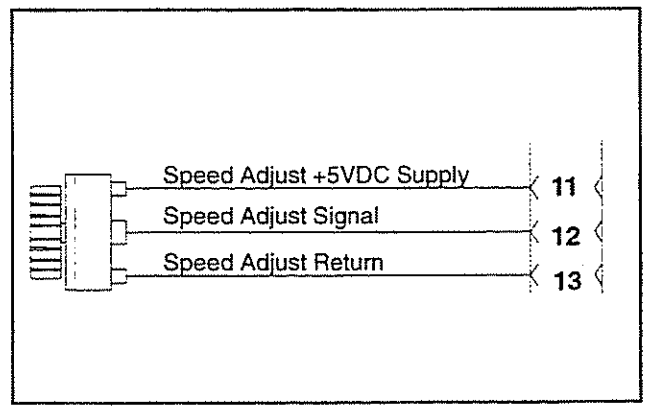

Alternate Frequency Switch

The Service Tool is used to set up Alternate Speed selections (see Adjustments on page 45). The Alternate (or second selection for rated engine speed) is selected by grounding pin 2 via a customer supplied switch.

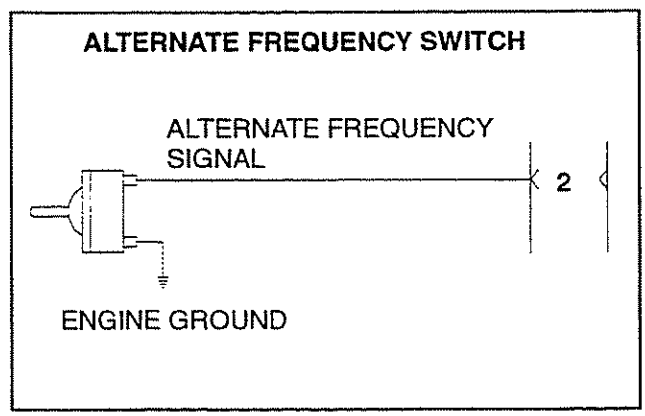

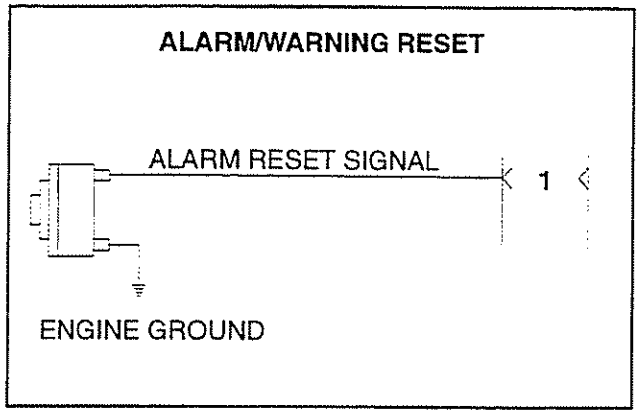

Alarm/Warning Reset Switch

A customer supplied switch resets all Alarm/ Warning functions and inactive Fault Codes by grounding pin 1. Warning relay drivers and relay contacts can be reset while the engine is running or shut down. Alarm shutdown relay drivers and contacts, and inactive fault codes, can be reset only when the engine is shut down. To restart the engine on an alarm shutdown, the Run/Stop switch must be moved to the OFF position then back to Run.

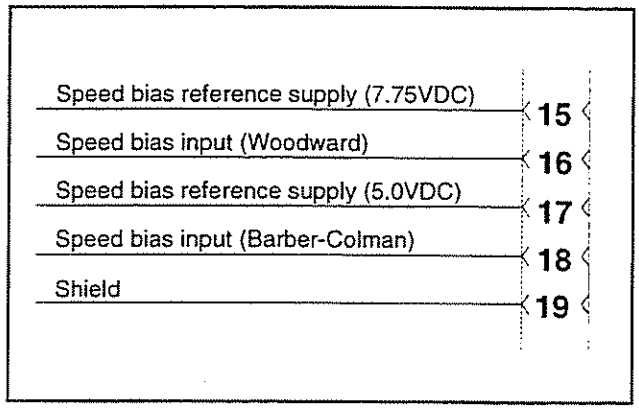

Barber-Colman & Woodward Speed Bias Inputs

Provides for integration with standard Barber-Colman and Woodward Load Sharing, Auto-Synchronizing, Load Commander, etc. hardware, both digital and analog (see Multiple Unit Wiring).

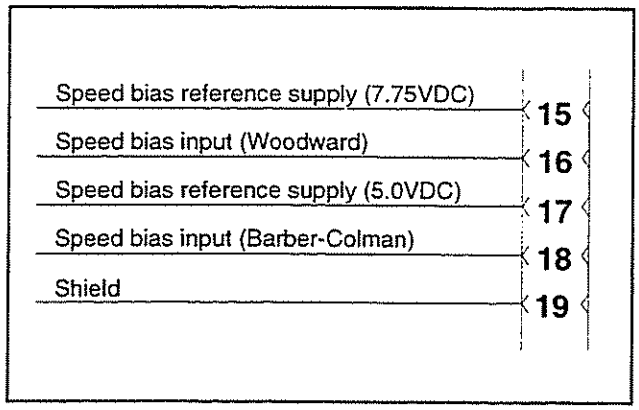

Woodward utilizes only the 5.0VDC reference supply while Barber-Colman utilizes both the 5.0 and 7.75VDC reference supplies.

Note: The QST30 ECM supplies the reference voltages (via internal 5.0 and 7.75VDC power supplies) to the Woodward or Barber-Colman load controls.

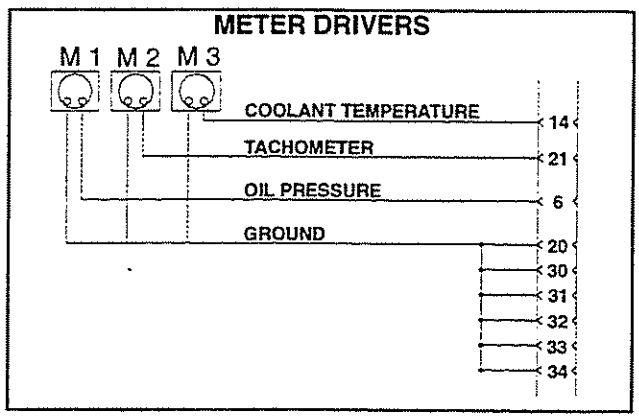

Meter Driver Outputs

Drivers for Coolant Temperature, Engine Speed and Engine Oil Pressure are provided for customer supplied meters rated at 0-1mA input. These meters can be calibrated and tested for accuracy with the electronic Service Tool.

Relay Driver Outputs

Relay drivers rated for 200mA maximum at 24VDC can be used to drive customer supplied LEDs, horns, or relays for HCT, LOP and Engine Overspeed conditions.

With the exception of Engine Overspeed, alarm shutdowns are non-adjustable. Pre-Alarms (Warnings) are adjustable via the Service Tool. See Engine Protection Setpoints on page 32 for adjustable ranges and factory settings.

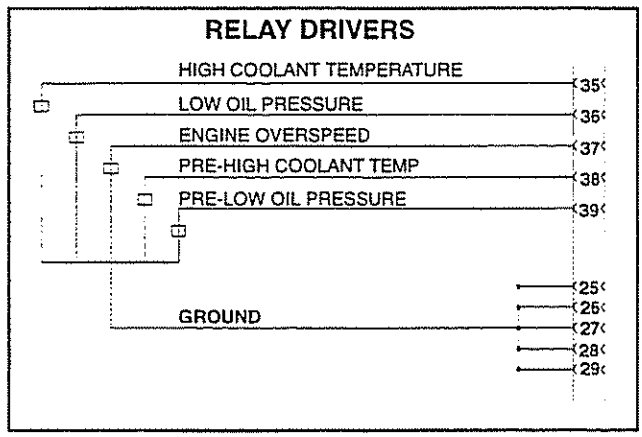

Common Alarm/Warning Relay Contacts

Any alarm (shutdown) or pre-alarm (warning) function will close a corresponding set of normally open (N/O) relay contacts for customer use.

Relay contacts are rated for 2A at 30VDC and 1.2A at 50VDC.

Note: See the Fault Code Table (page 106) for all fault conditions that energize the Alarm and Warning Relays.

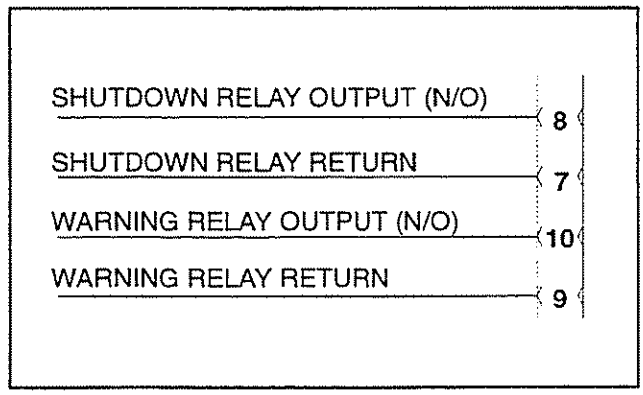

QST30 G-DRIVE WIRING DIAGRAM
CUSTOMER/GOEM HARNESS

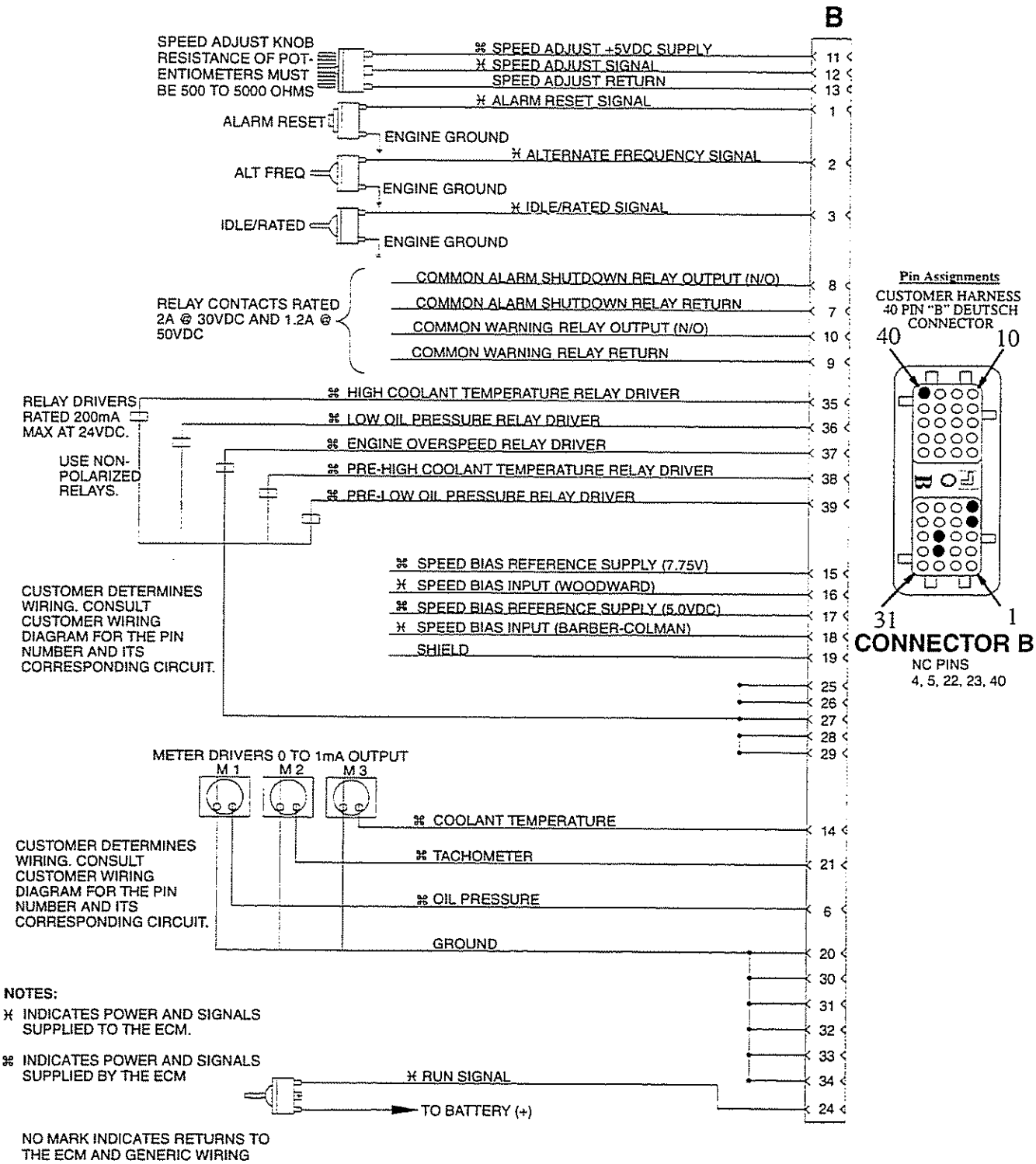

Electronic Service Tool

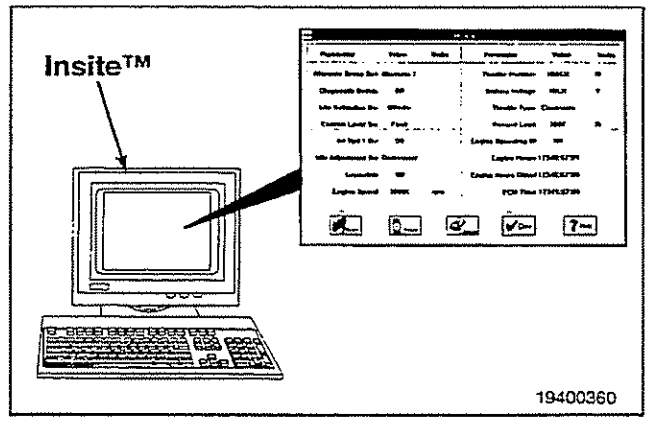

The electronic service tool, INSITE™ QST30 G-Drive (Part No. 3825145), is a Windows® 95 software application. The QST30 G-Drive service tool functions with all Cummins QST30 generator drive electronic control modules (ECMs) to diagnose and troubleshoot engine problems or modify an engine's operating settings.

Note: The INSITE™ QST30 G-Drive electronic service tool is not to be confused with other Cummins INSITE™ service tools designed for industrial and automotive ECMs. The INSITE™ QST30 G-Drive tool is compatible **only with** QST30 generator drive ECMs and, conversely, other INSITE™ tools are incompatible with generator drive ECMs.

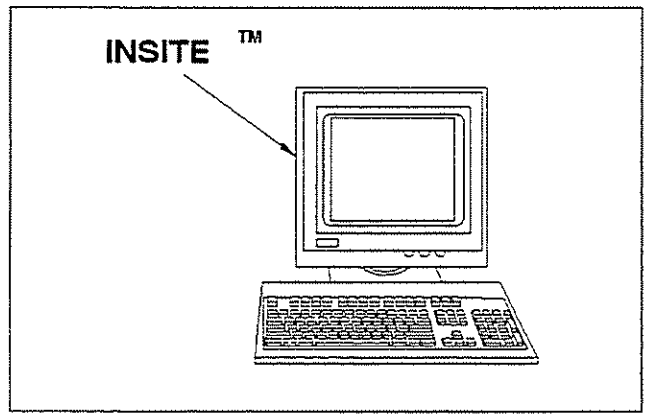

INSITE™ QST30 G-Drive is to be used on an IBM or compatible personal computer (desktop or portable) that is attached to an ECM with the proper serial interconnect cable (Part No. 3825183). The PC can then be used to retrieve the latest information about the engine, monitor data to assess the operation of the engine or make a number of customer selected adjustments to the engine.

Note: For further information on the INSITE™ QST30 G-Drive service tool, see the INSITE™ QST30 G-Drive User's Manual (Bulletin No. 3666196).

Establishing Communication with the ECM

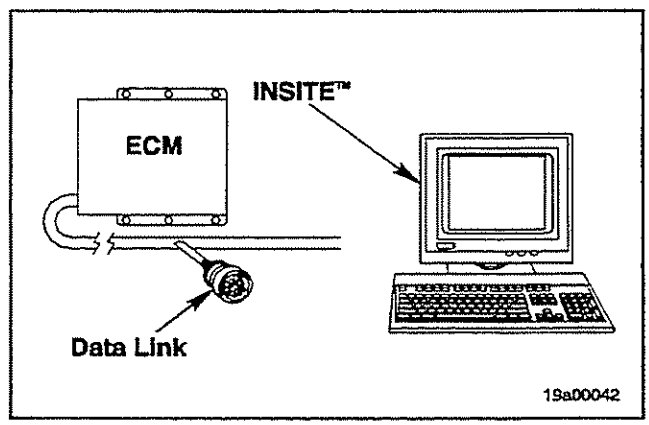

Install the serial interconnect cable (3825183) to the back of the PC and the 9-pin Deutsch connector to the engine harness.

Power up the ECM by removing the cap on the 4-pin Weatherpack Diagnostic Connector (opening the circuit between pins 36 and 37 of the ECM's A-connector) in the engine harness. See Engine Harness Diagram on page 37.

Note: Both the 9-pin Deutsch and 4-pin Weatherpack engine harness connectors are located near the flywheel housing on the left bank side of the engine.

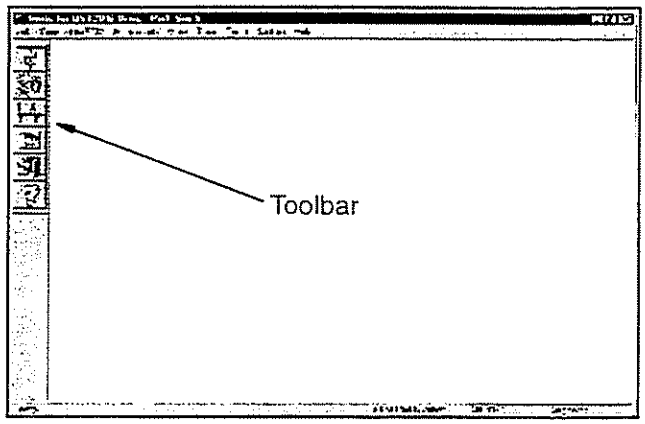

Start the INSITE™ QST30 G-Drive program by opening the QST30 G-Drive application icon or, from the Windows® 95 Programs menu, highlighting the QST30 menu and clicking on INSITE for QST30 G-Drive (this will automatically establish communications with the ECM if everything is set up correctly).

Verify that communications have been established from the Main QST30 G-Drive Window. If any of the six buttons in the left hand toolbar are grayed out (three will gray out if there is a lack of data transfer) proper communications have **not** been established.

Note: Ensure (via the System User Option window) that communication is set to the correct serial port (e.g. Port 1, Port 4, etc.).

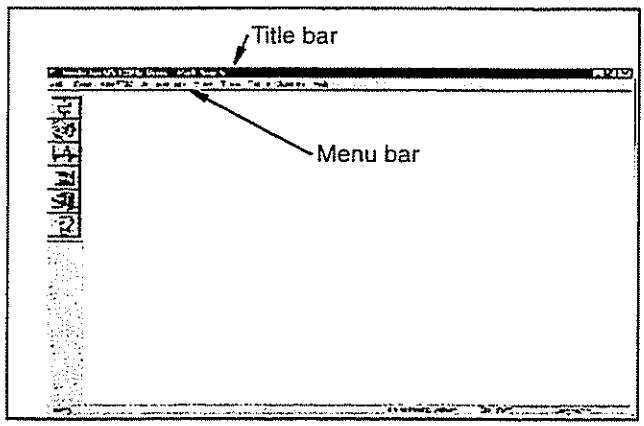

The Main INSITE™ for QST30 G-Drive Window

All functions are performed from the Main INSITE™ QST30 G-Drive Window. This window incorporates many of the standard operating techniques used in Windows® 95.

The **Title** bar displays the product name (INSITE for QST30 G-Drive) and the selected communication port.

The **Menu** bar, below the Title bar, provides complete access to every function in the service tool through drop-down menus.

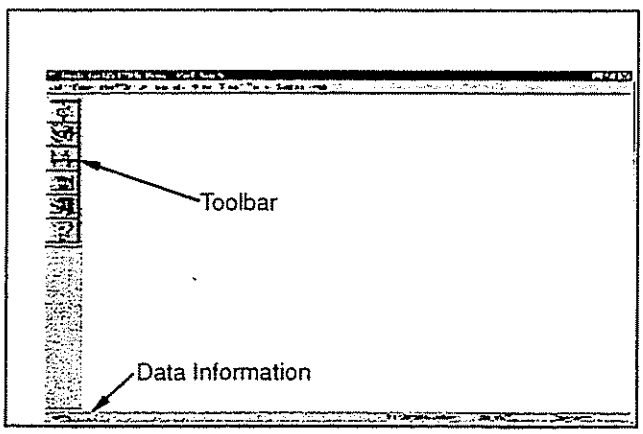

The **Toolbar**, at the left of the main window, contains buttons that can be clicked to quickly access the most frequently used commands.

The **Data Information Line**, near the bottom of the window, displays reference information about the current function, the active ECM part number and the current operating mode.

Adjustments (Features and Parameters)

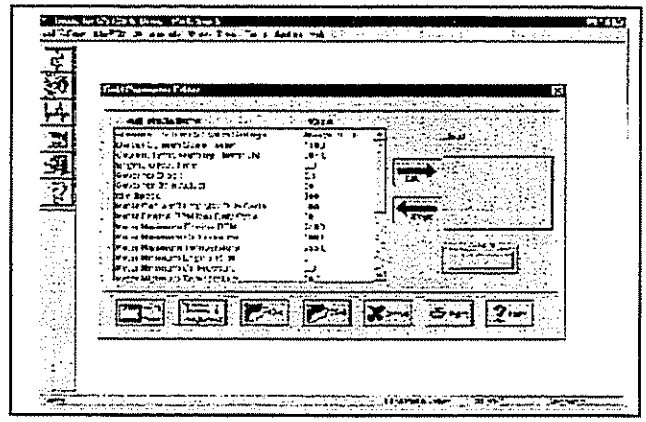

The Features and Parameters command in the Adjustments menu allows access to the Field Parameter Editor dialog box to view or edit (change the value of) any QST30 g-drive adjustable engine parameter.

For a **listing of all Adjustable Parameters,** and their ranges, see the Adjustable Parameters Listing on page 59.

Note: Access to, and adjustments from, this screen are only allowed when the engine is **not** running.

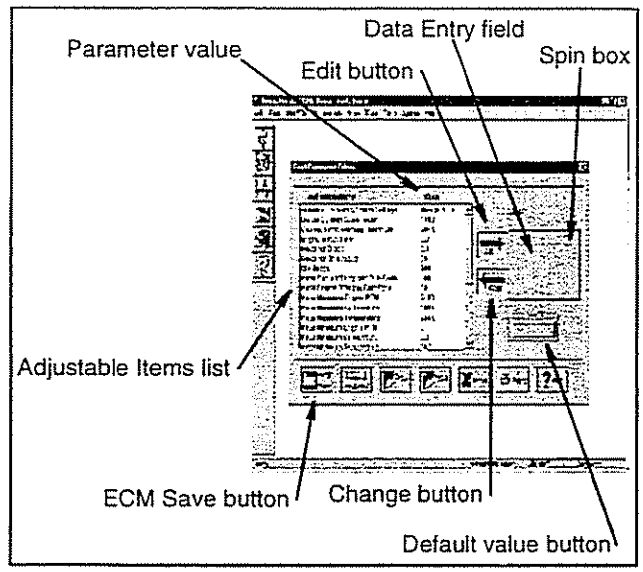

To change a parameter setting:

- From the list of Adjustable Items, highlight the parameter with the mouse then click the Edit button, or double click on the parameter.
- Edit the parameter value by either using the spin box; clicking in the data entry field, deleting the current setting and entering the desired value; or clicking on the Default value button.
- Click the Change button (or Enter) to change the parameter's value in the list of Adjustable Items.
- To permanently save parameter changes to the ECM, click on the ECM Save button at the bottom left of the screen.

View (Fault Information)

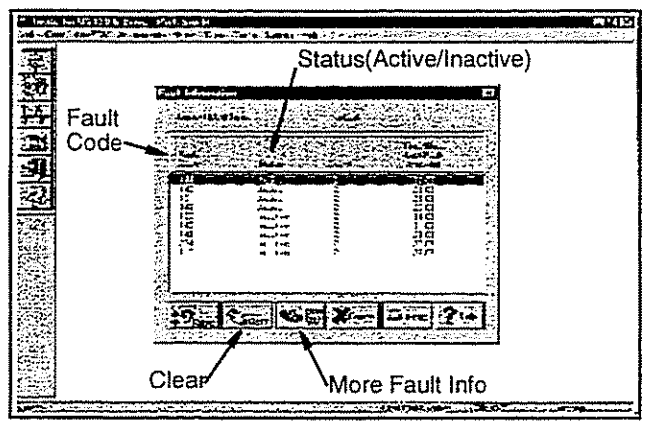

The Fault Information command in the View menu displays fault codes, fault information, and snapshot data as well as providing troubleshooting steps.

Each Fault Code indicates a particular malfunction or abnormal condition within the ECM, subsystem, or engine.

Active Faults indicate that the condition is present now. Inactive Faults indicate a condition that is not presently active.

The Clear button erases all fault codes in the ECM. This button is **disabled** when the engine is running.

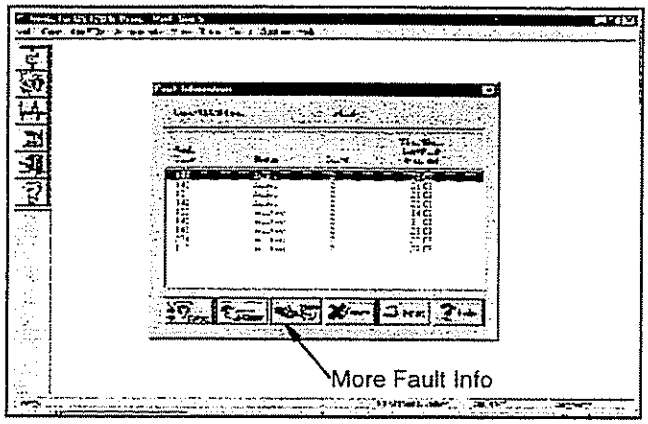

There are several dialog boxes associated with the Fault Information command:

- The **Fault Information** dialog box displays a summary list of fault data for an engine.
- The **Fault Information - Additional Information** dialog box allows selection of diagnostic information or more detailed fault data for display.

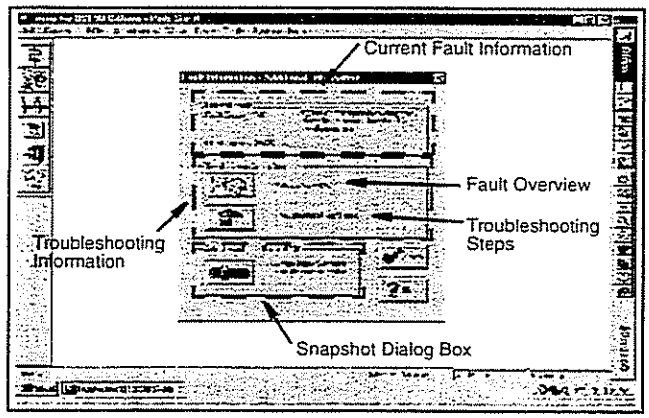

- The **Fault Overview** window describes each fault in detail.
- The **Troubleshooting Steps** window describe specific actions that can be taken to correct a fault.
- The **Snapshot** dialog box displays key engine sensor data and switch settings that were recorded at the first and last occurrence of each fault.

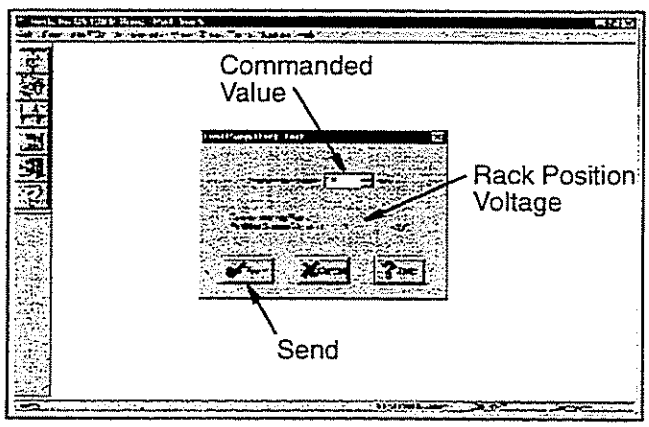

Tests (Fuel Pump Rack Test)

The Fuel Pump Rack Test command in the Tests menu allows testing of the fuel pump rack actuator circuits (both banks). This test can only be performed when the engine is **not** running.

This test allows positioning of the fuel pump racks between 0 and 20 mm of rack travel. For any position commanded, the test screen displays the voltage (VDC) which should be read on the rack position signal circuits in the engine harness diagnostic connector (pins B and C with respect to ground pin A). See Engine Harness Diagram on page 37.

Tests (Relay Driver Test)

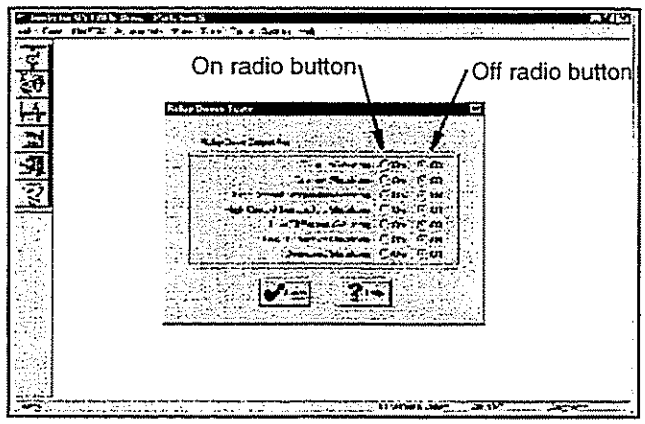

The Relay Driver Test command in the Tests menu allows the available Relays and Relay Drivers to be toggled on or off. This test can be used for diagnostic testing of customer's fault indicator circuits. This test can also be used to help troubleshoot the ECM Relay contacts, ECM Relay Driver outputs, relays being driven, relay wiring and devices (lamps, alarms, etc.) being activated.

- Click the On radio button to energize an output for a parameter.
- Click the Off radio button to de-energize an output for a parameter.

Tests (Fault Simulation Test)

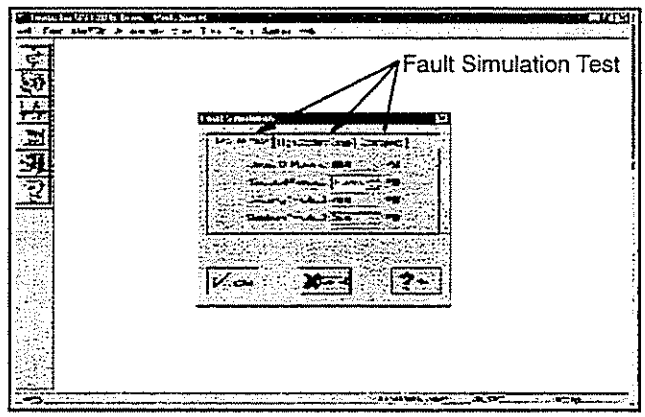

The Fault Simulation Test command in the Tests menu allows simulation of conditions in the engine that would cause faults. This is useful for testing and demonstrating proper operation of the engine protection system including sensors and ECM diagnostics.

There are three Fault Simulation Tests that can be performed while the engine is running:

- Low Oil Pressure Test
- High Coolant Temperature Test
- Engine Overspeed Test

⚠ CAUTION ⚠

Fault Simulation tests should not be performed while the engine generator set is connected to any load or bus or equipment damage may result.

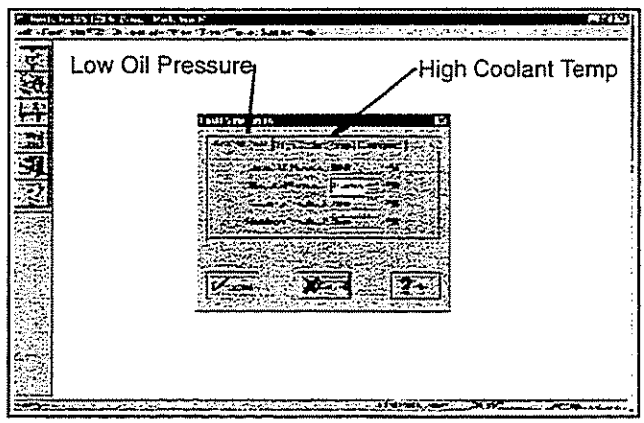

For Low Oil Pressure and High Coolant Temperature Fault Simulations, the engine's actual sensor outputs are temporarily overridden. To prevent the engine from being left in a defenseless condition (the ECM reading a safe condition during override instead of an actual condition), a timer cancels the Simulation Test after a 20 second time out. The timer is reset to 20 seconds after each adjustment to the simulated value. The timer is displayed in each dialog box when the Simulation is being run.

⚠ CAUTION ⚠

If the PC shuts down for any reason during Simulation, the engine must be powered off and restarted for the fault sensors to be reactivated.

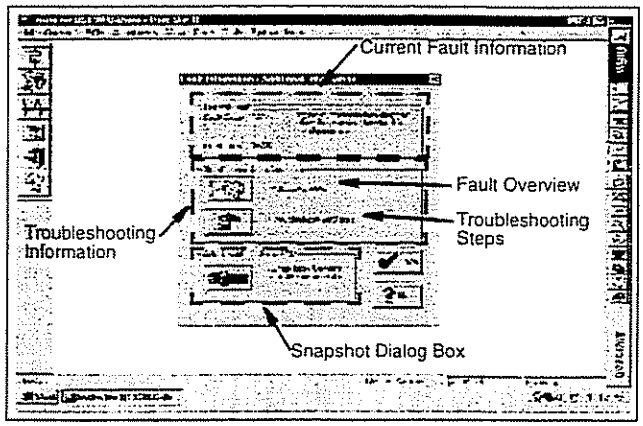

After completing any Fault Simulation, use the Fault Information command in the View menu to check the results of the simulation. Fault Codes and associated Snapshot Data can be displayed.

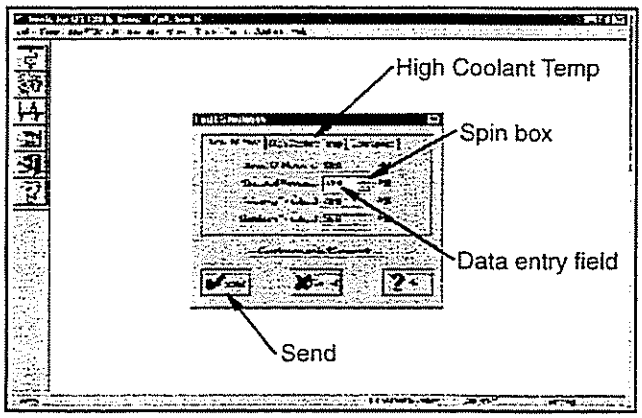

Fault Simulation Test - High Coolant Temperature

The High Coolant Temp tab dialog box under the Fault Simulation Test command allows simulating a High Coolant Temperature condition that would cause high coolant temperature faults. From this dialog box, the actual coolant temperature sensor input value to the ECM can be overridden by adjusting the Simulated Temperature value.

- Click the up or down arrow in the spin box to change Simulated Temperature in one degree increments,

or

- type the desired Simulated Temperature value in the data entry field then click the Send button to send the value to the ECM.

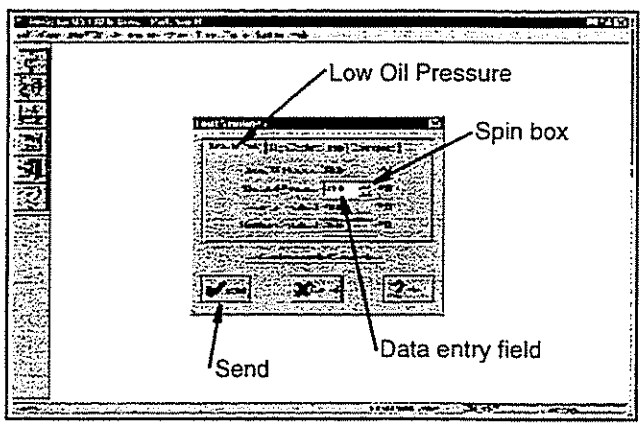

Fault Simulation Test - Low Oil Pressure

The Low Oil Press tab dialog box under the Fault Simulation Test command allows simulating of a Low Oil Pressure condition that would cause low oil pressure faults. From this dialog box, the actual oil pressure sensor input value to the ECM can be overridden by adjusting the Simulated Pressure value.

- Click the up or down arrow in the spin box to change Simulated Pressure in one PSI increments,

or

- type the desired Simulated Pressure value in the data entry field then click the Send button to send the value to the ECM.

Fault Simulation Test - Overspeed

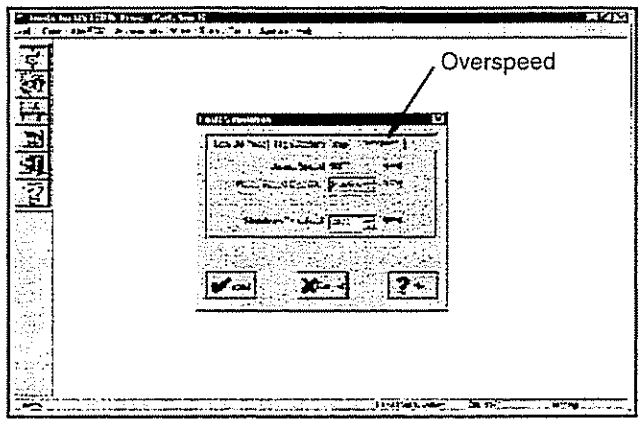

The Overspeed tab dialog box under the Fault Simulation Test command allows creation of a safe Engine Overspeed condition that would cause an engine overspeed shutdown fault. From this dialog box, the Overspeed Shutdown Threshold can be temporarily changed to any desired value (within the Overspeed Shutdown adjustment range) and Rated Engine Speed can be overridden by adjusting the Rated Engine Speed Override value.

Note: Whenever acceptable, it is always desirable to perform overspeed shutdowns at a speed lower than the maximum Overspeed Shutdown Threshold, 2070 RPM, which is also the factory default value.

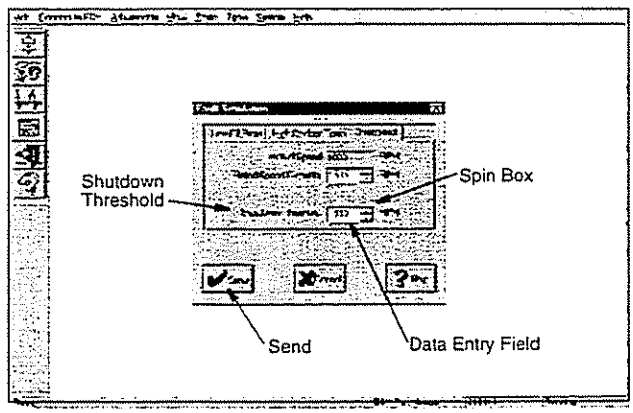

Adjust Shutdown Threshold:

- Click the up or down arrow in the spin box to change Shutdown Threshold in ten RPM increments,

or

- type the desired Shutdown Threshold value in the data entry field, Click the Send button to send the value to the ECM.

Adjust Rated Speed:

- Click the up or down arrow in the spin box to change Rated Speed Override in ten RPM increments,

or

- type the desired Rated Speed Override value in the data entry field then click the Send button to send the value to the ECM.

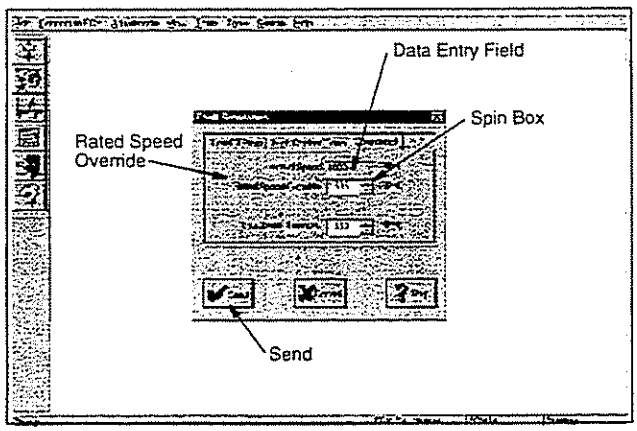

Note: When changing the Rated Speed Override commanded value, the audible change in engine speed may not be as smooth as the programmed ramp functions in the ECM. Service Tool commanded changes to Rated Engine Speed are governed from the service tool, not the ECM.

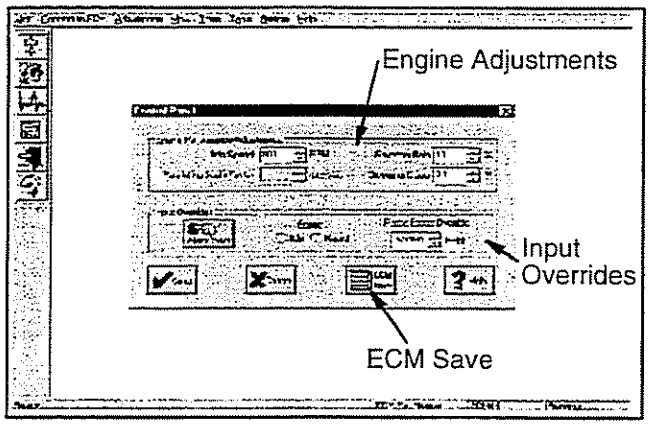

Tools (Control Panel)

The Control Panel command in the Tools menu allows control of a running engine directly from the INSITE™ QST30 G-Drive service tool. This is useful for either diagnostics or setting certain engine parameters while **running** versus changing parameters only when the engine **is not** running.

Engine Performance Adjustment parameters in the Control Panel screen can be permanently saved to the ECM using the ECM Save button.

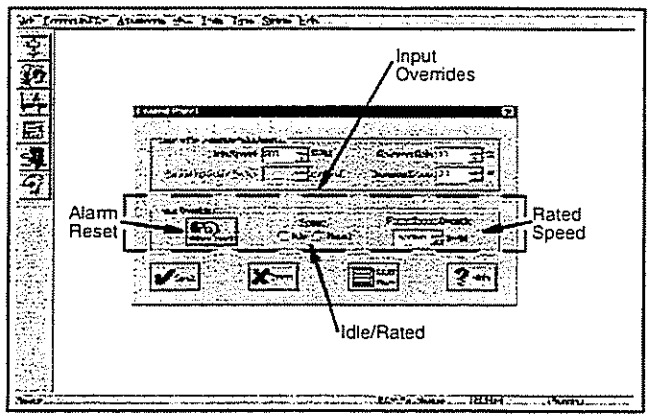

Input Overrides allow for control of switched inputs from the service tool (Alarm Reset and Idle/Rated) and direct control of Rated Engine Speed (1000-2070 RPM).

△ CAUTION △

The Idle/Rated switching and Rated Speed Override control should only be used while the engine generator set is not connected to any load or bus, otherwise engine damage may result.

Note: When the Control Panel screen is exited, control will return to the external control inputs.

Note: When changing the Rated Speed Override commanded value, the audible change in engine speed may not be as smooth as the programmed ramp functions in the ECM. Service Tool commanded changes to Rated Engine Speed are governed from the service tool, not the ECM.

Tools (Meter Calibration)

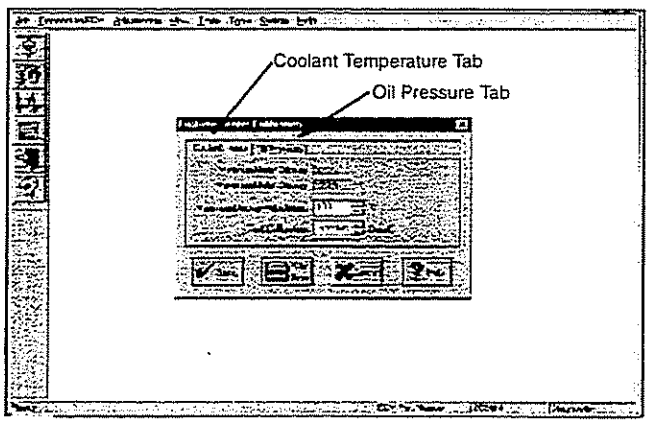

The Meter Calibration command in the Tools menu allows proper setting of customer meter displays and verifying their correct functioning.

There are two meter calibrations that can be performed from the Meter Calibration command while the engine is **not** running:

- Coolant Temperature
- Oil Pressure

Note: The engine must be shut down to perform these calibrations as sensor inputs are temporarily overridden. If allowed while the engine was running, improper functioning of the engine protection feature could result.

Meter Calibration - Coolant Temperature

The Coolant Temp tab dialog box (under the Meter Calibration command) allows setting of a customer Coolant Temperature Meter display and is used to verify correct meter functioning.

The Maximum Display Adjustment field (meter driver % duty cycle) allows adjustment of the customer's Coolant Temperature meter for calibration. The Test Calibration field inputs a desired Coolant Temperature override signal in place of the sensor input.

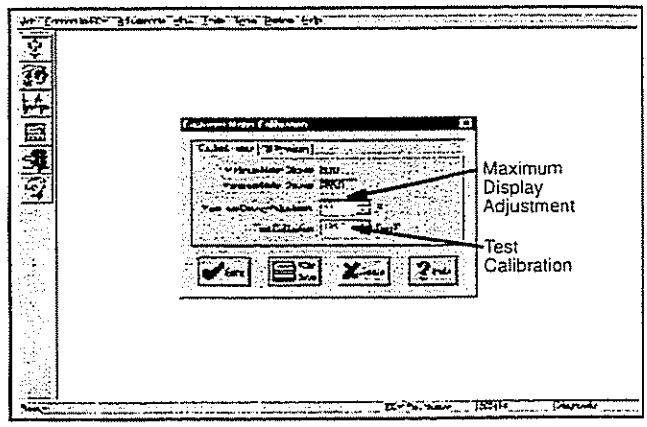

To change parameter settings:

- Type values in the data entry boxes or click the up or down arrow in the spin boxes. Click the Send button to send the value to the ECM.

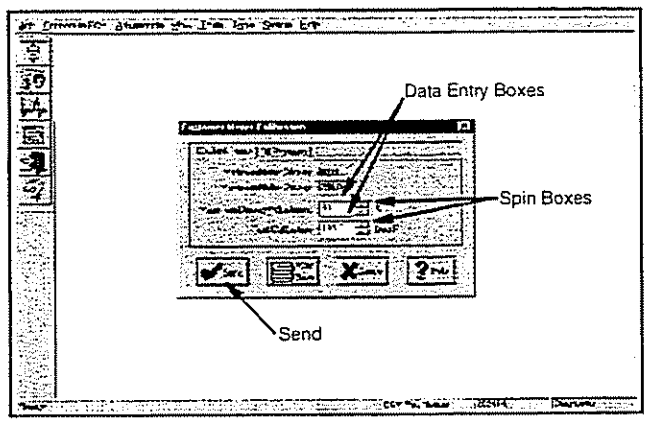

To calibrate the customer Coolant Temperature Meter:

- Ensure that the Minimum and Maximum Meter Display values are correct.
- Enter a Test Calibration value for the highest meter accuracy desired (e.g. 90.6° C [195 F]).
- If required, adjust the Maximum Display Adjustment value until the customer's meter display matches the Test Calibration value (e.g. if the meter reads too high a value, lower the percent duty cycle).
- If adjustment of the Maximum Display Adjustment was required to improve meter accuracy, save the most accurate percent duty cycle to the ECM by clicking the ECM Save button.

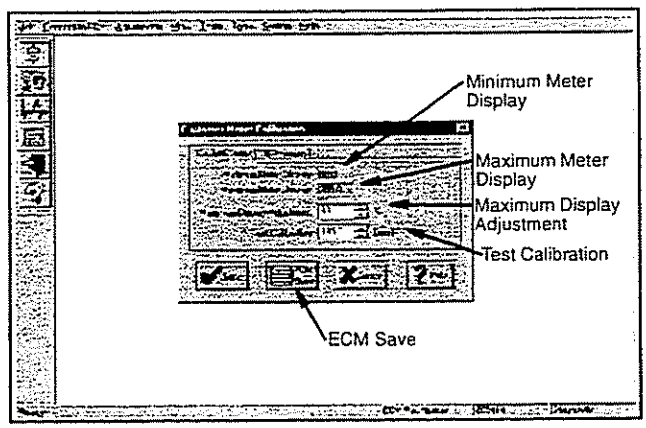

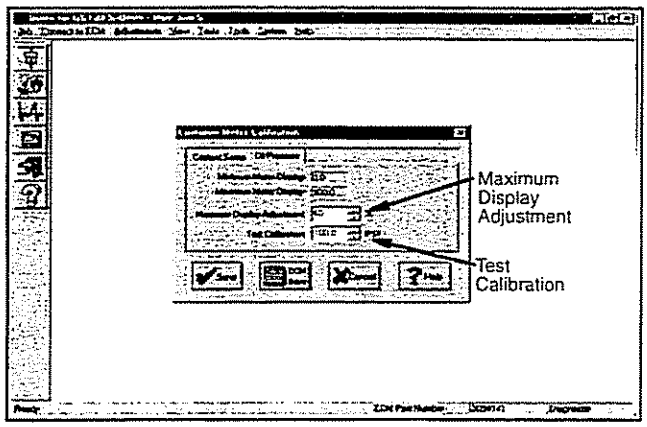

Meter Calibration - Oil Pressure

The Oil Pressure tab dialog box (under the Meter Calibration command) allows setting of a customer Oil Pressure Meter display and is used to verify correct meter functioning.

The Maximum Display Adjustment field (meter driver % duty cycle) allows adjustment of the customer's Oil Pressure meter for calibration. The Test Calibration field inputs a desired Oil Pressure override signal in place of the sensor input.

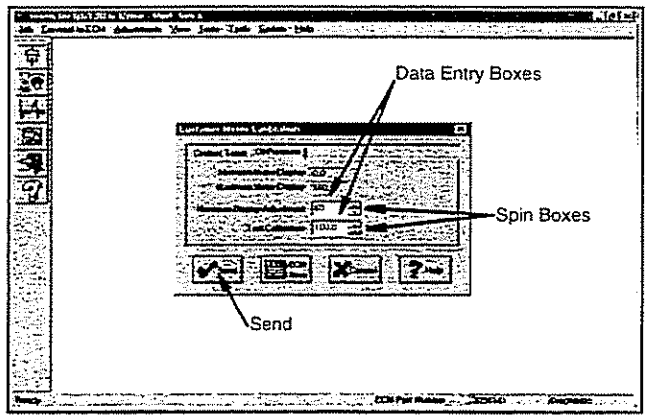

To change parameter settings:

- Type values in the data entry boxes or click the up or down arrow in the spin boxes. Click the Send button to send the value to the ECM.

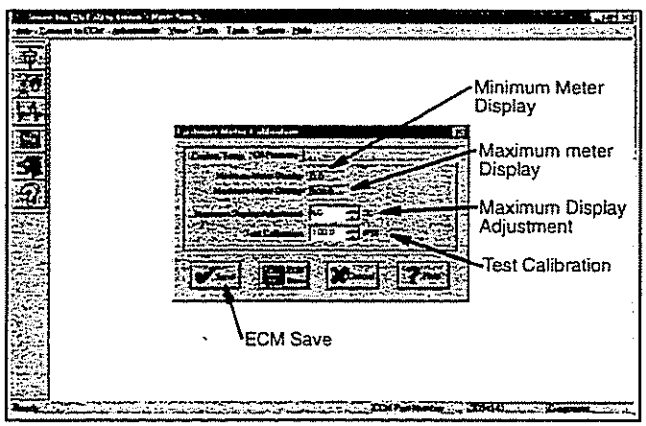

To Calibrate the customer Oil Pressure Meter:

- Check that the Minimum and Maximum Meter Display values are correct.
- Enter a Test Calibration value where the highest meter accuracy is desired (e.g. 414 kPa [60 PSI]).
- If required, adjust the Maximum Display Adjustment value until the customer's meter display matches the Test Calibration value (e.g. if the meter display reads too high a value, lower the percent duty cycle).
- If adjustment of the Maximum Display Adjustment was required to improve meter accuracy, save the most accurate percent duty cycle to the ECM by clicking the ECM Save button.

Tools (Tachometer Calibration)

The Tachometer Calibration command in the Tool menu allows for the setting of a customer Tachometer display and verifying its correct functioning. Calibration of the customer's tachometer is performed while the engine is **running** with the settings verified by varying Rated Engine Speed (1000-2070 RPM).

The Maximum Display field (meter driver % duty cycle) allows adjustment of the customer's Tachometer. for calibration. The Rated Speed Override field adjusts actual engine speed for meter accuracy verification.

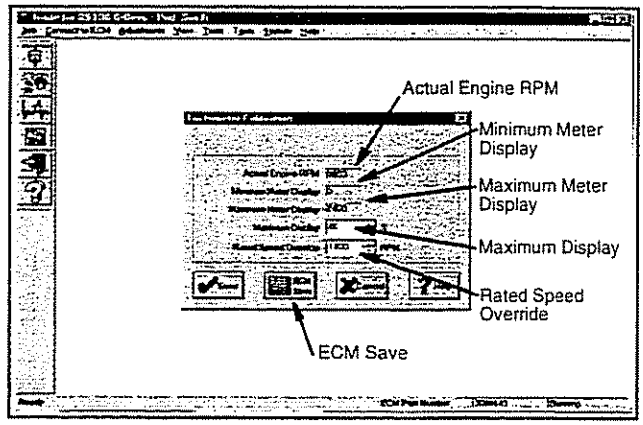

To change parameter settings:

- Type values into the data entry boxes or click the up or down arrow in the spin boxes then click the Send button to send the value to the ECM.

Note: When changing the Rated Speed Override commanded value, the audible change in engine speed may not be as smooth as the program ramp functions in the ECM. During Service Tool commanded changes to Rated Engine Speed, speed ramping is governed from the Service Tool, not the ECM.

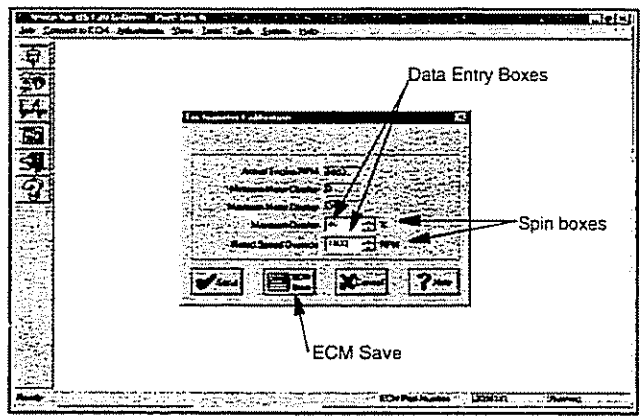

⚠ CAUTION ⚠

Rated Speed Override control should only be used while the engine generator set is not connected to any load bus or equipment damage may result.

To calibrate the Customer Tachometer:

- Check the Minimum and Maximum Meter Display values are correct.
- Enter a Rated Speed Override value where the highest meter accuracy is desired (e.g. 1500 or 1800 RPM).
- If required, adjust the maximum Display value until the customer's meter display matched the Actual Engine RPM value (e.g. if the meter reads too high a value, lower the percent duty cycle).
- If adjustment of the Maximum Display was required to improve meter accuracy, save the most accurate percent duty cycle to the ECM by clicking the ECM Save button.

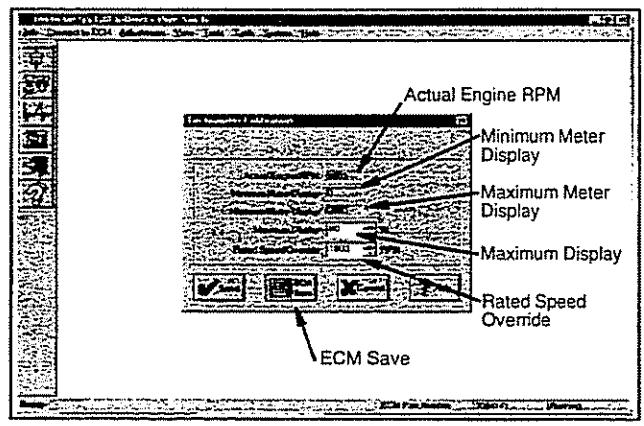

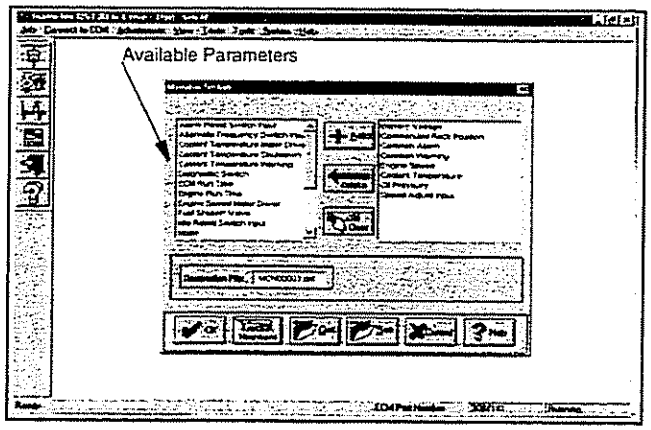

Tools (Monitor)

The Monitor command in the Tools menu allows the viewing of data for up to **sixteen** specific engine parameters of a running engine.

For a **listing of all Monitor Parameters**, see the Monitor and Data Logger Parameters Listing on page 60.

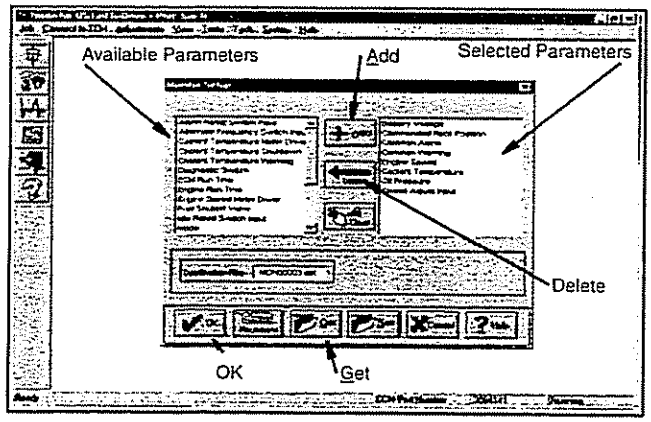

To specify a group of parameters to Monitor:

- **To add a parameter**, double click, or single click to highlight the parameter then click the Add button, on each desired parameter in the Available Parameters box,

  or

  retrieve a desired Monitor setup file using the Get button and selecting the desired file.

- **To delete a parameter**, double click, or single click to highlight then click the Delete button, on each non-desired parameter in the Selected Parameters box.

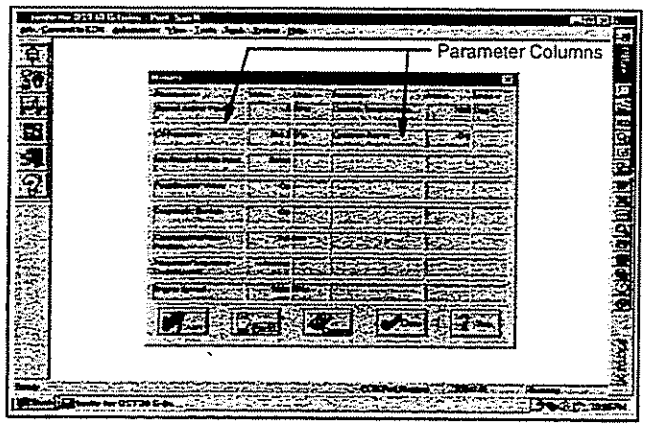

To begin Data Monitoring:

- Specify which engine parameters are to be Monitored.
- Click the OK button at the bottom of the Monitor Setup screen.

Note: To create Log setup files or to capture monitored data to a log file, see the INSITE™ QST30-G-Drive User's Manual (Bulletin No. 3666196).

Tools (Data Logger)

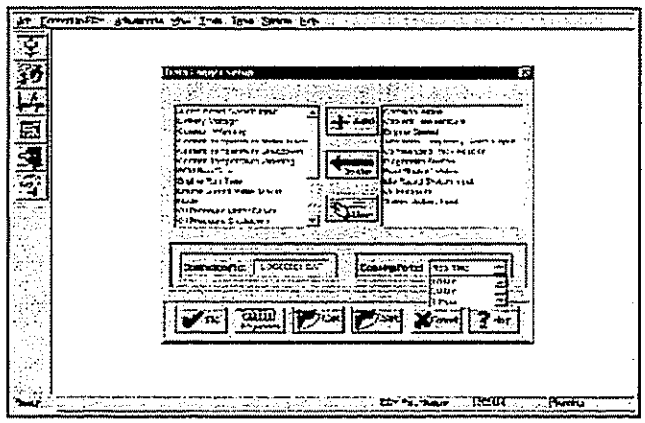

The Data Logger command in the Tools menu allows the saving of up to **sixteen** specific engine parameters of a running engine to a data file. This data can be used to troubleshoot engine problems by isolating and analyzing specific operating parameters over time.

Available engine parameters for Data Logging are the same as those available in the Monitor command. For a **listing of all Data Logger Parameters**, see the Monitor and Data Logger Parameters Listing on page 60.

To specify a group of parameters to Data Log:

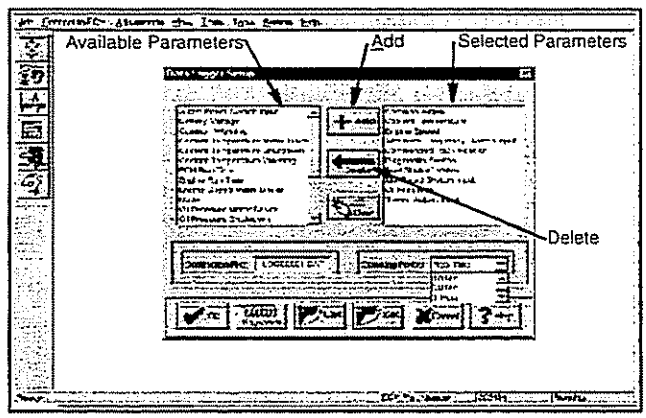

- **To add a parameter,** double click, or single click to highlight then click the Add button, on each desired parameter in the Available Parameters box,

  or

  retrieve a desired Log setup file using the Get button and selecting the desired file.

- **To delete a parameter**, double click, or single click to highlight then click the Delete button, on each non-desired parameter in the Selected Parameters box.

To begin Data Logging:

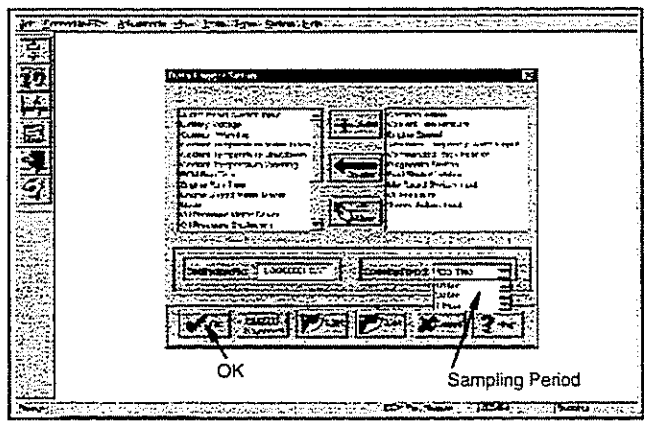

- Specify which engine parameters are to be Data Logged.
- Specify the desired Sampling Period (real time up to one hour) in the Sampling Period drop down box in the Data Logger Setup screen.
- Click the OK button in the Data Logger Setup screen.
- Add any desired comments then click the Start button in the Data Logger screen.

Note: To create Log setup files, see the INSITE™ QST30 G-Drive User's Manual (Bulletin No. 3666196).

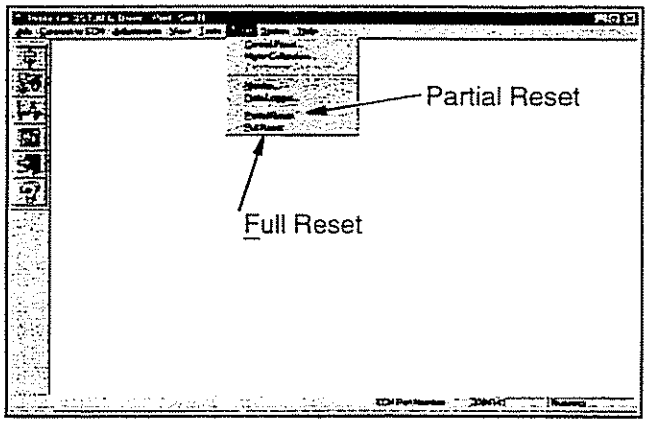

Tools (Partial and Full Reset)

The Partial Reset command in the Tools menu allows the resetting of features and functions in the ECM that **do not** affect customer-defined parameter settings (a Partial Reset **does not** erase any customer adjusted parameter settings).

The Full Reset command in the Tools menu allows the resetting of **all** features and functions in the ECM to their **default** settings (a Full Reset returns the ECM to its original factory settings and **does** erase all customer adjusted parameter settings).

Partial or Full Resets can only be performed while the engine is **not** running.

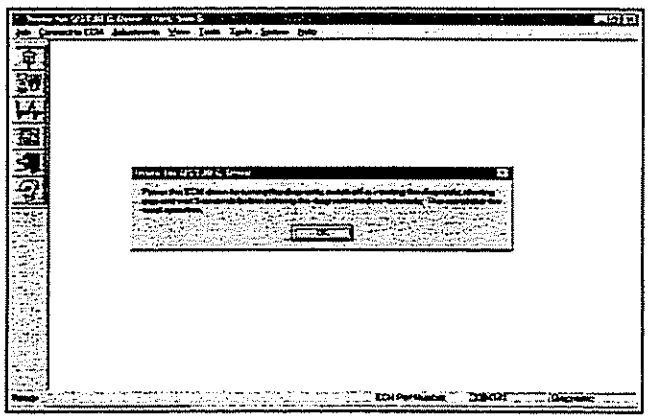

After selecting either Reset command, power to the ECM must be removed and then restored for the reset to take effect.

⚠ CAUTION ⚠

The Full Reset command erases all customer-defined settings from the ECM, such as parameter adjustments and meter calibrations.

Note: Partial or Full Resets should not be performed unless it is recommended by either the Fault Information (Troubleshooting) System in the Service Tool or the Fuel System Troubleshooting and Repair Manual.

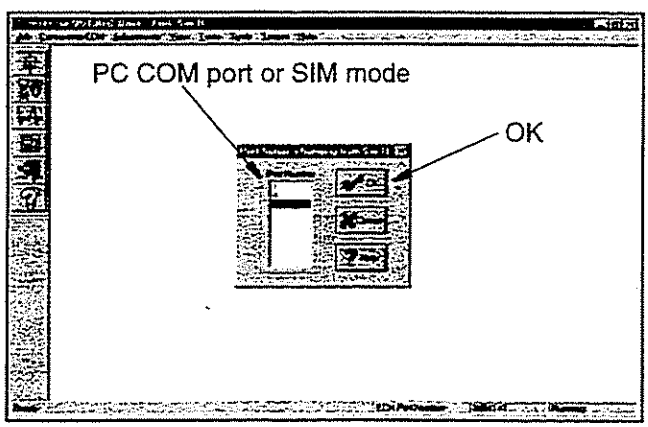

System (User Options...)

The User Options command in the System menu allows the setting of the Communication Port on the Service Tool's PC or to place the Service Tool in a simulator mode. Simulator modes are provided to use and demonstrate INSITE™ QST30 G-Drive without being attached to an ECM.

Selections available in the Port Setup dialog box (under User Options):

- Numerical selections (PC COM port numbers)
- Sim S (engine Shutdown/Diagnostic Simulator mode)
- Sim R (engine Run Simulator mode)

To select a COM port setting or Simulator mode:

- In the Port Setup dialog box, double click, or single click to highlight then click the OK button, on the desired COM port number or mode of simulation listed.

The selected setting or mode will activate immediately.

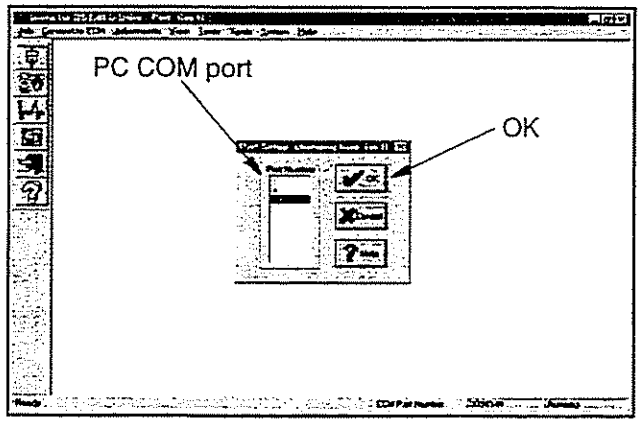

System (Units of Measure...)

The Units of Measure command in the System menu allows specifying desired measurement units for Coolant Temperature and Oil Pressure.

Selections available in the System of Measurement dialog box (under Units of Measure):

- Latin America (psi and Deg. C)
- Metric (kPa and Deg. C)
- US (psi and Deg. F)

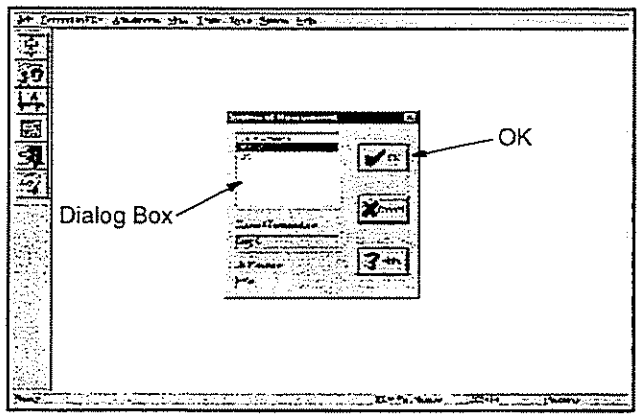

The measurement system that is highlighted when the System of Measurement dialog box is first opened under the Units of Measure command is the measurement system that is currently active.

To select a measurement system:

- In the System of Measurement dialog box, double click, or single click to highlight then click the OK button, on the desired measurement system listed.

The selected measurement system will activate immediately.

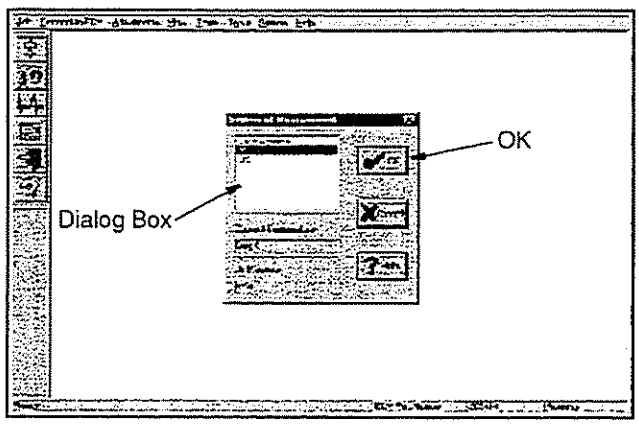

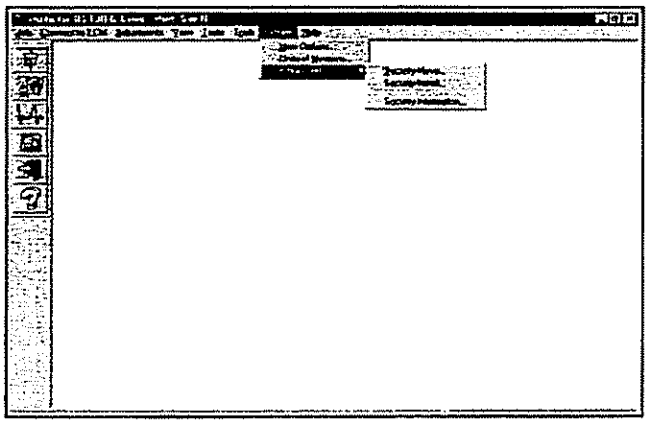

System (Administrator)

The Administrator submenu on the System menu allows moving, installing or viewing Security information for the Service Tool.

Administrator commands:

- The **Security Move** command moves the security key **to** or **from** the Service Tool's PC hard drive.
- The **Security Install** command installs a security key after the Service Tool has already been installed on the PC.
- The **Security Information** command identifies the location and serial number of the security key.

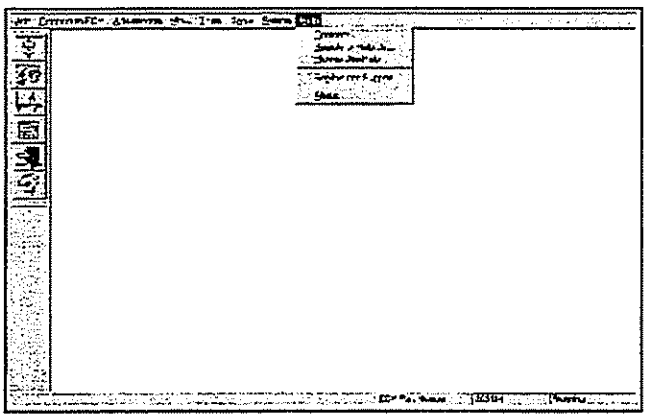

Help

The Help menu provides information about how to work with INSITE™ QST30 G-Drive.

Help commands:

- The **Contents** command displays the Table of Contents of the INSITE™ QST30 G-Drive Help System.
- The **Search for Help On** command allows selected keyword searches and displays related topics.
- The **How to Use Help** command provides instructions on how to use a Windows® Help system.
- The **Service and Support** command displays pertinent telephone numbers and addresses to obtain assistance and information about using INSITE™ QST30 G-Drive.
- The **About** command displays identifying information (serial and version numbers) about that particular INSITE™ QST30 G-Drive tool.

Adjustable Parameters Listing

Parameter	Range/Selections	Default Value
Alternate Frequency Switch Setting	50 Hz, Alt=60 Hz 60 Hz, Alt=50 HZ Always 50 Hz or Always 60 Hz	60 Hz, Alt=50 Hz
Barber-Colman Scale Factor	500 to 2000 rpm/volt	1100 rpm/volt
Coolant Temp. Warning Threshold	-18 to 124 °C [0 to 255 °F]	97.2 °C [207 °F]
Engine Offset Time	0 to 9,999,999 Hours	0 Hours
Governor Droop	0 to 10%	0% (Isochronous)
Governor Gain Adjust	1 to 100%	10%
Idle Speed	700 to 900 rpm	800 rpm
Meter Coolant Temp. Max. Duty Cycle	0 to 100%	100%
Meter Engine RPM Max. Duty Cycle	0 to 100%	100%
Meter Maximum Engine RPM	0 to 2400 rpm	2400 rpm
Meter Maximum Oil Pressure	0 to 689.5 kPa [0 to 100 psi]	689.5 kPa [100 psi]
Meter Maximum Temperature	-18 to 124 °C [0 to 255 °F]	124 °C [255 °F]
Meter Minimum Engine RPM	0 to 2400 rpm	0 rpm
Meter Minimum Oil Pressure	0 to 689.5 kPa [0 to 100 psi]	0 kPa [0 psi]
Meter Minimum Temperature	-18 to 124 °C [0 to 255 °F]	-18 °C [20 °F]
Meter Oil Press. Max. Duty Cycle	0 to 100%	100%
Oil Press. Warn. Threshold at Idle	0 to 689.5 kPa [0 to 100 psi]	103.4 kPa [15 psi]
Oil Press. Warn Threshold at Rated	0 to 689.5 kPa [0 to 100 psi]	275.8 kPa [40 psi]
Overspeed Shutdown RPM	1000 to 2070 rpm	2070 rpm
Ramp Time (Crank to Rated)	(See Table of Ramp Times)	0
Ramp Time (Idle to Rated)	(See Table of Ramp Times)	0
Speed Adjust Knob	Enabled or Disabled	Disabled
Speed Bias Input Type	Barber-Colman Woodward or Disabled	Disabled
Torque Curve Adjustment	0.0 to +1.0%	0%
Woodward Scale Factor	20 to 60 rpm/volt	36 rpm/volt

Default Values are factory set trims (calibrations) programmed into all ECMs and are the parameter settings when the customer receives the ECM (unless the customer's local ABO informs of local resetting of specific parameters).

Default Values may vary from the above set trims for reasons of specific engine rating or market requirements (example: Alternate Frequency Switch setting which determines engine run speed).

For additional engine specific **Default Value** information, consult the Customer Interface Software (DO) option section of the Sales Handbook.

Monitor and Data Logger Parameters Listing

Parameter	Value
Alarm Reset Switch Input	Either depressed (On) or released (Off)
Alternate Frequency Switch Input	Either Normal or Alternate
Barber-Colman Speed Bias	± RPM speed bias offset (from Barber-Colman controls)
Battery Voltage	Un-switched battery supply to ECM
Commanded Rack Position	Fuel rack position (mm) commanded by ECM
Common Alarm	Relay status: On or Off
Common Warning	Relay status: On or Off
Coolant Temperature	Value read from the ECM
Coolant Temperature Meter Driver	Percent (%) duty cycle
Coolant Temperature Shutdown	Relay Driver status: On or Off
Coolant Temperature Warning	Relay Driver status: On or Off
Diagnostic Switch	Either Diagnostic mode (On) or Running mode (Off)
ECM Run Time	Total ECM power up time read from the ECM (in hours:minutes)
Engine Run Time	Value read from the ECM (in hours:minutes)
Engine Speed	Value read from the ECM
Engine Speed Meter Driver	Percent (%) duty cycle
Fuel Shutoff Valve	Shutoff valves commanded status: On or Off
Idle Rated Switch Input	Either Idle or rated
Mode	The current operating state (Diagnostic or Run)
Oil Pressure	Value read from the ECM
Oil Pressure Meter Driver	Percent (%) duty cycle
Oil Pressure Shutdown	Relay Driver status: On or Off
Oil Pressure Warning	Relay Driver status: On or Off
Overspeed Shutdown	Relay Driver Status: On or Off
Run Stop Switch Input	Either Run or Stop
Speed Adjust Input	± RPM speed bias offset (from speed adjust potentiometer)
Speed Adjust Knob	Either Enable or Disable (for speed adjust potentiometer)
Speed Bias Input Type	Either Barber-Colman, Woodward, or Disabled
Version Number	ECM software version number
Woodward Speed Bias	± RPM speed bias offset (from Woodward controls)

Up to sixteen of the above engine and ECM parameters may be Monitored or Data Logged via the INSITE™ QST30 G-Drive electronic service tool.

System Adjustments

Idle Speed

Idle speed is adjustable between 700 and 900 RPM using the INSITE™ QST30 G-Drive electronic service tool. Refer to the following sections to adjust Idle Speed:

- Adjustments (Features and Parameters) on page 45.
- Tools (Control Panel) on Page 50.

The factory **default setting** for the Idle Speed is **800 RPM**.

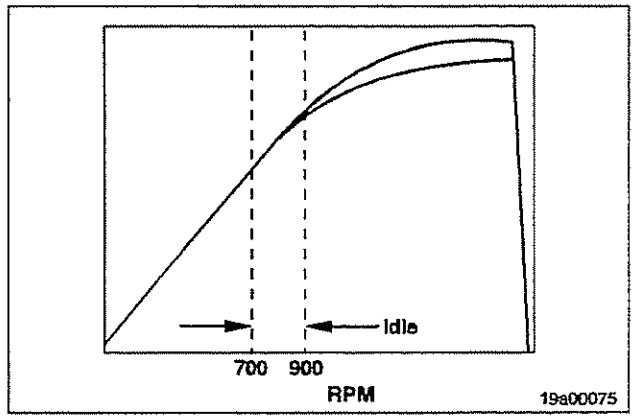

Rated Speed Selection

The selection of Rated Speed RPM (1500 or 1800 RPM) is made using the INSITE™ QST30 G-Drive electronic service tool. Refer to the Electronic Service Tool Adjustments (Features and Parameters) section on page 45 to select desired Rated Speed.

The Alternate Frequency Switch Setting (under the Features and Parameters command) determines what frequency/RPM will be Primary and which will be Alternate when used with a customer supplied Alternate Frequency Switch (see 50/60 HZ Operation). When no Alternate Frequency Switch is used, the ECM will govern Rated Speed at the Primary setting.

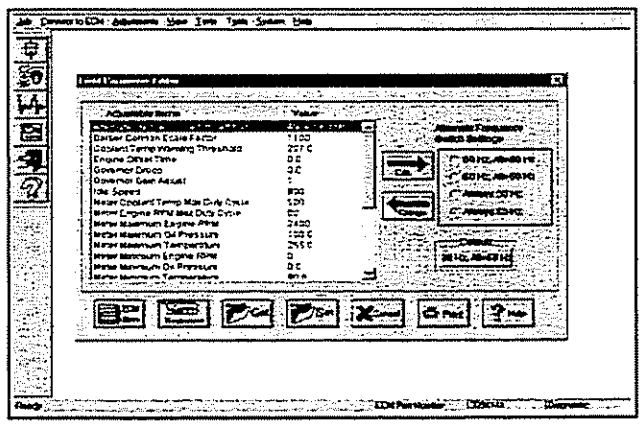

Available Alternate Frequency Switch Setting selections:

- 50 HZ (Primary), Alt=60 HZ
- 60 HZ (Primary), Alt=50 HZ
- Always 50 HZ
- Always 60 HZ

Consult the Customer Interface Software (DO) option section of the Sales Hand Book for the factory Alternate Frequency switch **default setting**.

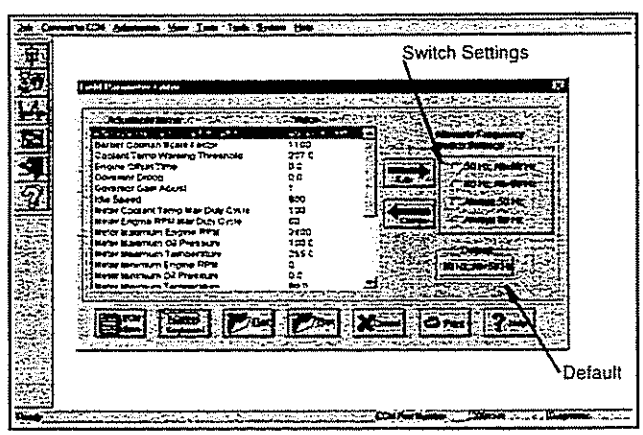

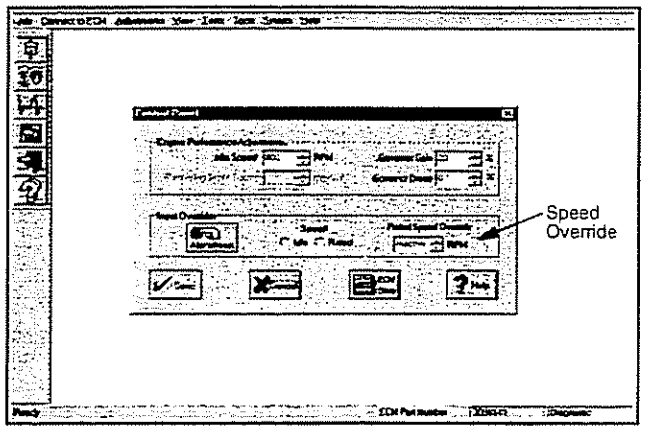

Rated Speed Adjustment

Rated Speed (Run speed) is non-adjustable (1500 or 1800 ± 0 RPM) except with the use of a customer supplied Remote Speed Adjust potentiometer (see Remote Speed Adjust) while in normal operation.

Temporary Rated Speed adjustments can be made with the INSITE™ QST30 G-Drive service tool for troubleshooting and test purposes. Refer to the following sections if temporary adjustments to Rated Speed are required:

- Fault Simulation - Overspeed on page 49.
- Tools (Control Panel) on page 50.
- Tools (Tachometer Calibration) on page 53.

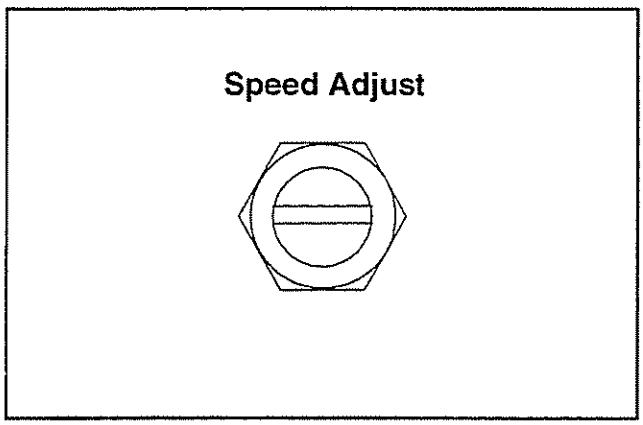

Remote Speed Adjustment

A customer supplied 5,000 ohm potentiometer provides for ± 6% adjustment around selected engine Run Speed. Refer to the Customer Wiring Remote Speed Adjust Potentiometer section on page 39 for proper wiring of a remote speed adjust potentiometer.

Note: The ECM must be calibrated to recognize if a remote speed adjust potentiometer is being utilized (Speed Adjust Knob **Enabled**).

The factory **default setting** for Speed Adjust Knob is **Disabled.**

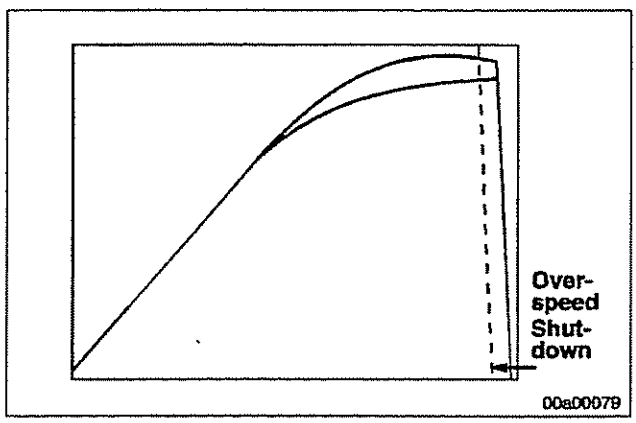

Overspeed Shutdown RPM Setpoint

The Overspeed Shutdowm RPM setpoint is adjustable between 1000 and 2070 RPM using the INSITE™ QST30 G-Drive electronic service tool. Refer to the following sections to adjust the Overspeed Shutdown setpoint, if required:

- Adjustments (Features and Parameters) on page 45.
- Fault Simulation - Overspeed on page 49.

The factory **default setting** for engine Overspeed Shutdown RPM is **2070 RPM.**

Idle/Rated Selection

A customer supplied Idle/Rated switch allows the selection of Idle or Rated speed mode. Refer to the Customer Wiring Idle/Rated Speed Switch section on page 39 for proper wiring of an Idle/Rated switch.

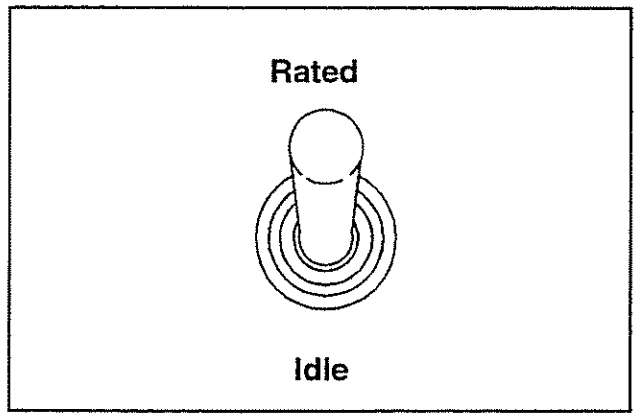

50/60 HZ Operation

A customer supplied Alternate Frequency Switch allows the selecting of 50 or 60 HZ Rated Speed operation without requiring an electronic service tool recalibration. Refer to the Customer Wiring Alternate Frequency Switching section on page 39 for proper wiring of an Alternate Frequency switch.

The Alternate Frequency Switch selects either the Primary or Alternate frequency/RPM the ECM is to govern at (see Rated Speed Selection).

Consult the Customer Interface Software (DO) option section of the Sales Hand Book for the factory Alternate Frequency switch **default setting**.

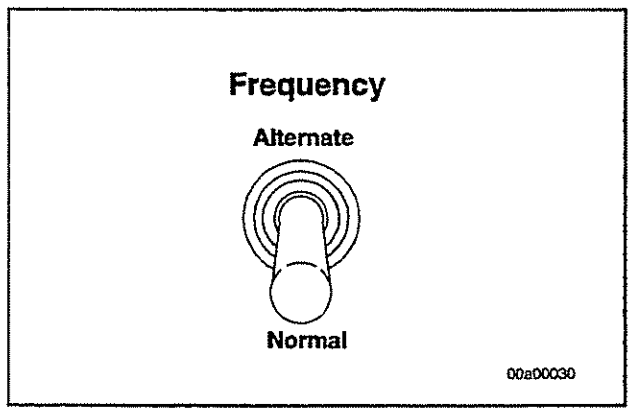

Speed Ramp Adjustments

The ECM provides for two speed ramp functions that are adjustable using the INSITE™ QST30 G-Drive electronic service tool:

- Ramp Time (Crank-to-Rated)
- Ramp Time (Idle-to-Rated)

Ramp Time (Crank-to-Rated) provides for speed ramping between Cranking and Rated speeds and Ramp Time (Idle-to-Rated) provides for speed ramping between Idle and Rated speeds.

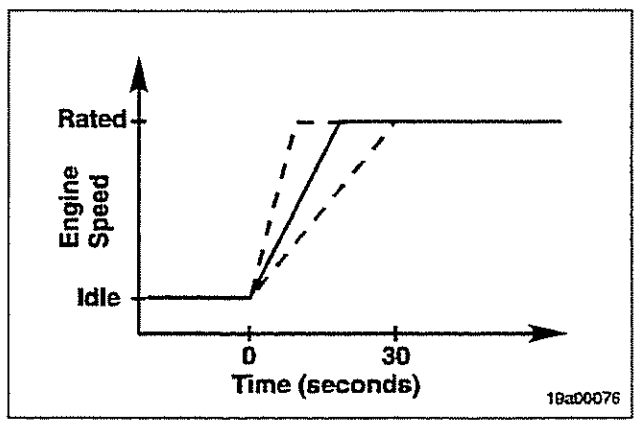

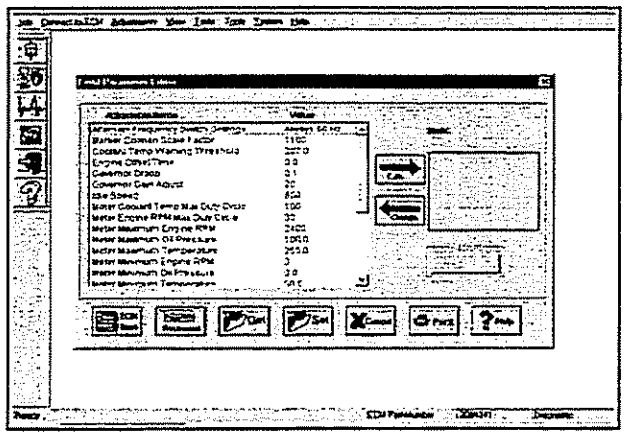

Refer to the Electronic Service Tool Adjustments (Features and Parameters) section on page 49 to select desired Ramp Times.

Note: Ramp times (in seconds) are dependent on Idle and Rated speed settings. Desired ramp times are selected by choosing Ramp #'s, **not** ramp times directly. Refer to the Table of Ramp Times on page 68 for ramp times (in seconds) based on RAMP # selections.

The factory **default setting** for both Ramp Times is Ramp # = **0**.

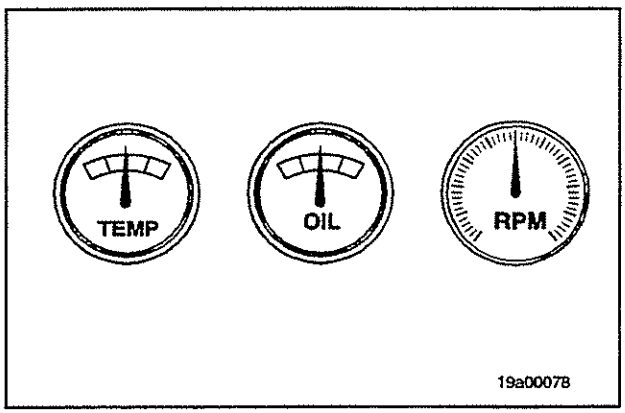

Meter Driver Calibrations

Meter Driver Duty Cycle is adjustable for the calibration of the following customer supplied meters (0-1 mA rated) using the INSITE™ QST30 G-Drive electronic service tool:

- Engine Coolant Temperature
- Engine Oil Pressure
- Engine Speed

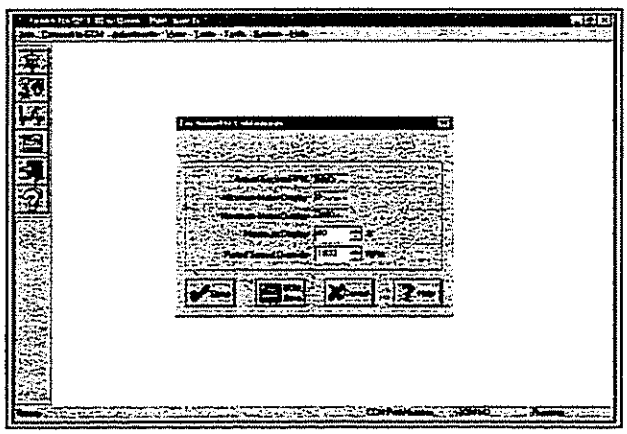

Refer to the following sections for proper Meter Driver Duty Cycle adjustments:

- Meter Calibration - Coolant Temp on page 51
- Meter Calibration - Oil Pressure on page 52
- Tools (Tachometer Calibration) on page 53

Governor Gain Adjustment

Governor Gain is adjustable between 1 and 100% using the INSITE™ QST30 G-Drive electronic service tool.

Typical QST30 engine-generator combinations will not require adjustments to the Governor Gain setting as both 1500 and 1800 RPM generator sets ordinarily exhibit satisfactory steady state stability and acceptable transient performance with the Gain value as set from the factory.

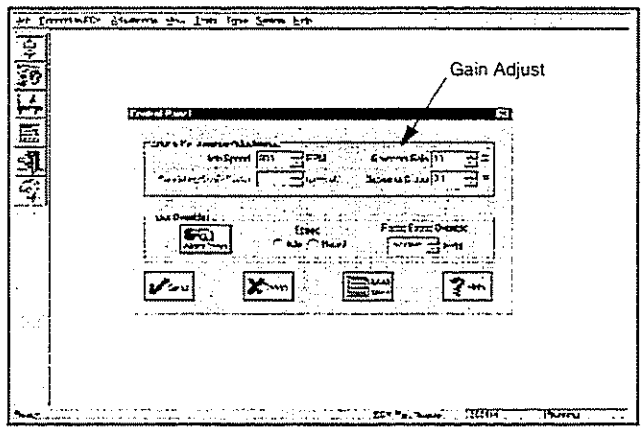

If required, refer to the following sections to adjust Governor Gain:

- Adjustment (Features and Parameters) on page 45
- Tools (Control Panel) on page 50

The factory **default setting** for Governor Gain Adjust is **10%**.

Note: Governor Gain Adjust settings of <3% may result in engine stall when started in Idle mode.

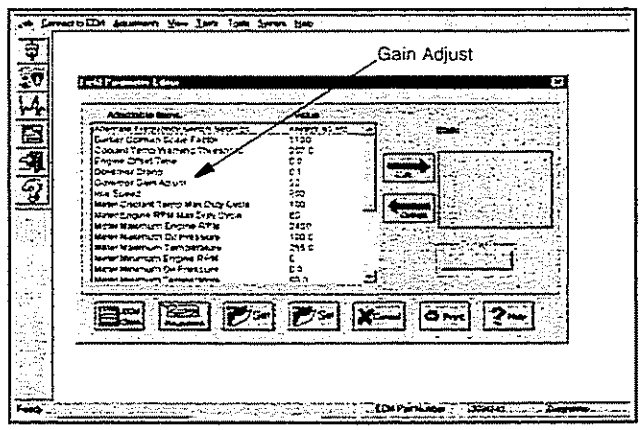

⚠ CAUTION ⚠

It takes a few seconds to initiate each service tool Gain adjustment. It is recommended that any increases in the Governor Gain setting be made in increments not exceeding 3% to prevent prolonged periods of unwanted instability.

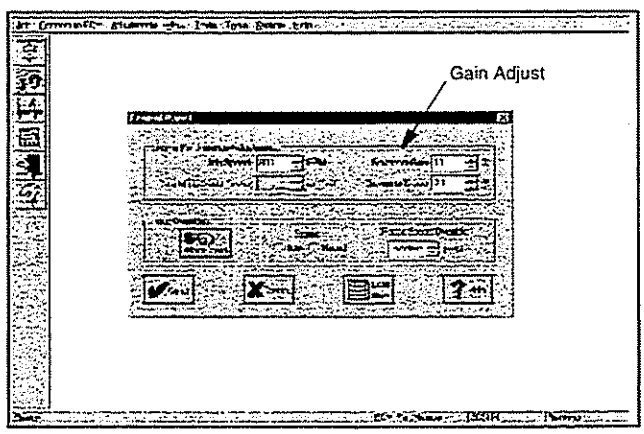

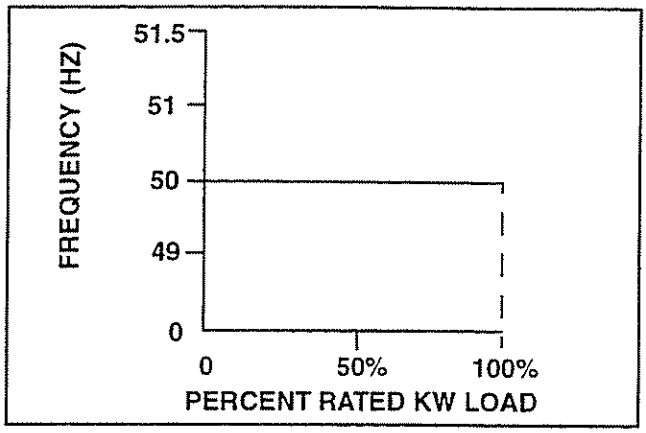

Governor Speed Droop Adjustment - Isochronous Mode

For Isochronous Speed operation, the Governor Droop setting needs to be set at zero (0)%.

The factory **default setting** for Governor Droop is **0%.**

If required, the Governor Droop setting can be adjusted using the INSITE™ QST30 G-Drive electronic service tool. Refer to the following sections to adjust Governor Droop:

- Adjustments (Features and Parameters) on page 45
- Tools (Control Panel) on page 50

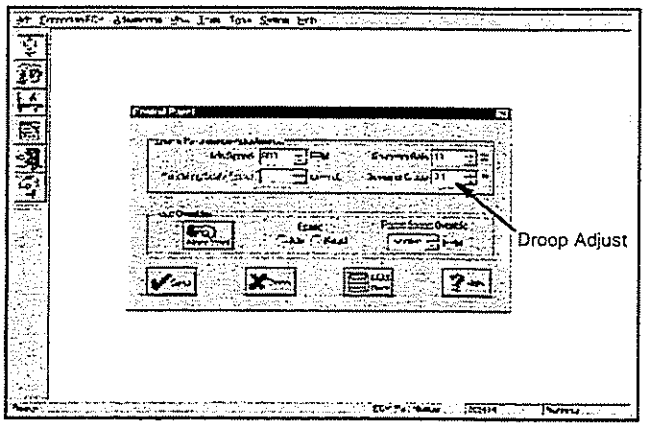

Governor Speed Droop Adjustment - Droop Mode

Governor Speed Droop is adjustable between 0 and 10% using the INSITE™ QST30 G-Drive electronic service tool. Refer to the following sections to adjust Governor Droop:

- Adjustments (Features and Parameters) on page 45
- Tools (Control Panel) on page 50

Note: Speed adjustments to obtain desired no-load Rated speeds **must** be made with a **Remote Speed Adjust** potentiometer (see Remote Speed Adjust).

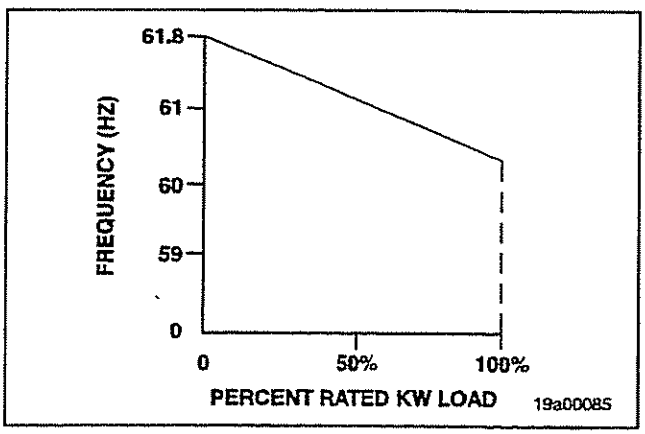

Engine-generator sets which are to operate at 60 HZ full-load, must have the engine no-load governed speed adjusted to:

61.8 Hz (1854 RPM) for
3% Speed Droop

63.0 Hz (1890 RPM) for
5% Speed Droop

Engine-generator sets which are to operate at 50 Hz full-load, must have the engine no-load governed speed adjusted to:

51.5 Hz (1545 RPM) for
3% Speed Droop

52.5 Hz (1575 RPM) for
5% Speed Droop

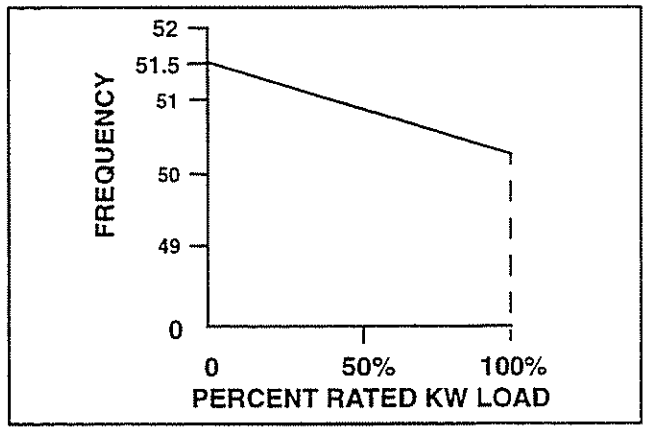

Percent Speed Droop on the engine-generator set can be verified by noting no-load and full-load speeds and using the % Speed Droop formula found on page 96.

When full-load KW is not available, to calculate what the Droop Governed speed should be under the available load, use this formula.

$$S_{al} = S_{nl} - \left(\left(\frac{\text{Available KW Load}}{\text{Rated KW}}\right) X (S_{nl} - S_{fl})\right)$$

Where:
S_{al} = Speed at Available KW Load
S_{fl} = Speed at Full KW Load
S_{nl} = Speed at No Load

Example:
Available KW Load = 400
Rated KW = 500
Speed at Full KW Load = 1800
Speed at No Load = 1854
$S_{al} = 1854 - \left(\left(\frac{400}{500}\right) X (1854 - 1800)\right)$
S_{al} = 1811 RPM

Table of Ramp Times

	1500 rpm Total Ramp Time			1800 rpm Total Ramp Time		
Ramp #	From 700 rpm Idle	From Crank or from 800 rpm Idle	From 900 rpm Idle	From 700 rpm Idle	From Crank or from 800 rpm Idle	From 900 rpm Idle
0	2 sec.	1 sec.	1 sec.	2 sec.	2 sec.	2 sec.
1	3 sec.	3 sec.	2 sec.	4 sec.	4 sec.	4 sec.
2	5 sec.	4 sec.	4 sec.	7 sec.	6 sec.	5 sec.
3	6 sec.	6 sec.	5 sec.	9 sec.	8 sec.	7 sec.
4	8 sec.	7 sec.	6 sec.	11 sec.	10 sec.	9 sec.
5	10 sec.	8 sec.	7 sec.	13 sec.	12 sec.	11 sec.
6	11 sec.	10 sec.	8 sec.	15 sec.	14 sec.	13 sec.
7	13 sec.	11 sec.	10 sec.	18 sec.	16 sec.	14 sec.
8	14 sec.	13 sec.	11 sec.	20 sec.	18 sec.	16 sec.
9	16 sec.	14 sec.	12 sec.	22 sec.	20 sec.	18 sec.
10	18 sec.	15 sec.	13 sec.	24 sec.	22 sec.	20 sec.
11	19 sec.	17 sec.	14 sec.	26 sec.	24 sec.	22 sec.
12	21 sec.	18 sec.	16 sec.	29 sec.	26 sec.	23 sec.
13	22 sec.	20 sec.	17 sec.	31 sec.	28 sec.	25 sec.
14	24 sec.	21 sec.	18 sec.	33 sec.	30 sec.	27 sec.
15	26 sec.	22 sec.	19 sec.	35 sec.	32 sec.	29 sec.
16	27 sec.	24 sec.	20 sec.	37 sec.	34 sec.	31 sec.
17	29 sec.	25 sec.	22 sec.	40 sec.	36 sec.	32 sec.
18	30 sec.	27 sec.	23 sec.	42 sec.	38 sec.	34 sec.
19	32 sec.	28 sec.	24 sec.	44 sec.	40 sec.	36 sec.
20	34 sec.	29 sc.	25 sec.	46 sec.	42 sec.	38 sec.
21	35 sec.	31 sec.	26 sec.	48 sec.	44 sec.	40 sec.
22	37 sec.	32 sec.	28 sec.	51 sec.	46 sec.	41 sec.
23	38 sec.	34 sec.	29 sec.	53 sec.	48 sec.	43 sec.
24	40 sec.	35 sec.	30 sec.	55 sec.	50 sec.	45 sec.
25	42 sec.	36 sec.	31 sec.	57 sec.	52 sec.	47 sec.
26	43 sec.	38 sec.	32 sec.	59 sec.	54 sec.	49 sec.
27	45 sec.	39 sec.	34 sec.	62 sec.	56 sec.	50 sec.
28	46 sec.	41 sec.	35 sec.	64 sec.	58 sec.	52 sec.
29	48 sec.	42 sec.	36 sec.	66 sec.	60 sec.	54 sec.
30	49 sec.	43 sec.	37 sec.	68 sec.	62 sec.	56 sec.

The **Ramp #** is **not** a unit measured in seconds, but a calibration (adjustable) parameter that delivers the time variables as stipulated in the table under the given conditions (from Crank or a given Idle RPM).

This table should be utilized to achieve a desired Ramp Time for both Crank to Rated and Idle to Rated ramp functions.

Starting Procedure After Extended Shutdown or Oil Change

GENERAL INFORMATION

Complete the following steps after each oil change or after the engine has been shut off for more than 120 hours. This will insure the engine receives the correct oil flow through the lubricating oil system.

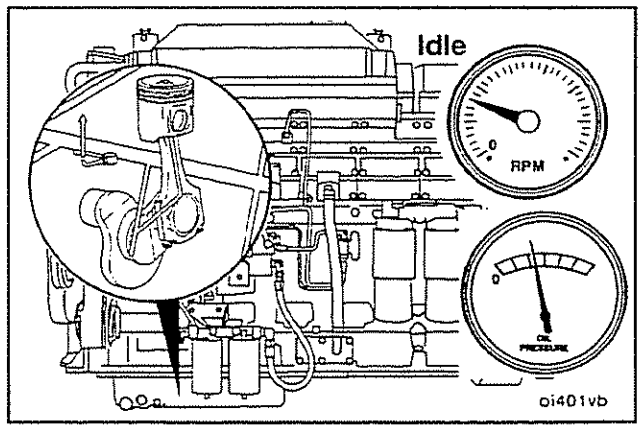

- Disconnect the multi-pin cable from both fuel pumps.
- Rotate the crankshaft, using the starting motor, until oil pressure appears on the gauge or the warning light goes out.
- Reconnect the multi-pin cable to both fuel pumps.
- Start the engine. Refer to normal starting procedures (see below).

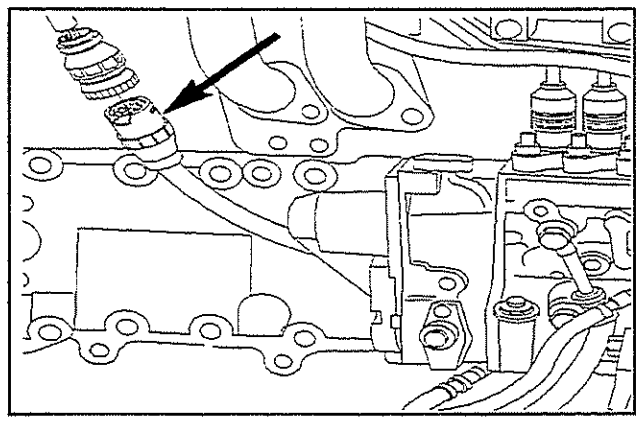

Engine Start-Up

Start the engine with the IDLE/RUN switch (using the idle feature) in the idle position.

To prevent damage to the starter, **do not** engage the starting motor more than 30 seconds. For electrical starting motor(s) wait two (2) minutes between each attempt to start to prevent overheating of the starter motor(s).

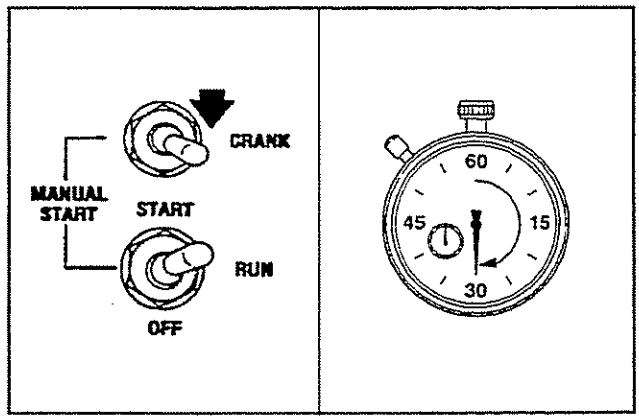

Engine oil pressure **must** be indicated on the gage within 15 seconds. If no pressure is observed shut off the engine immediately to avoid engine damage.

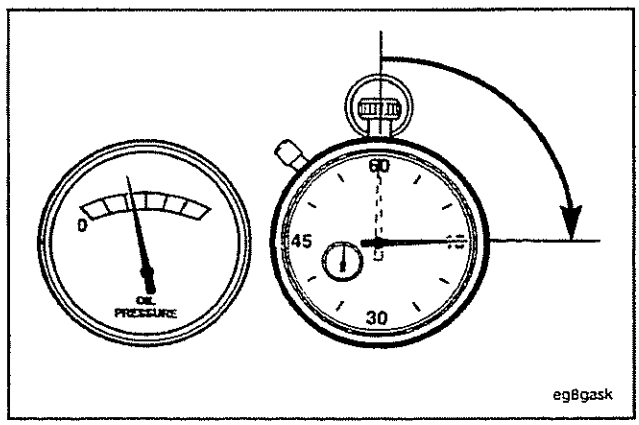

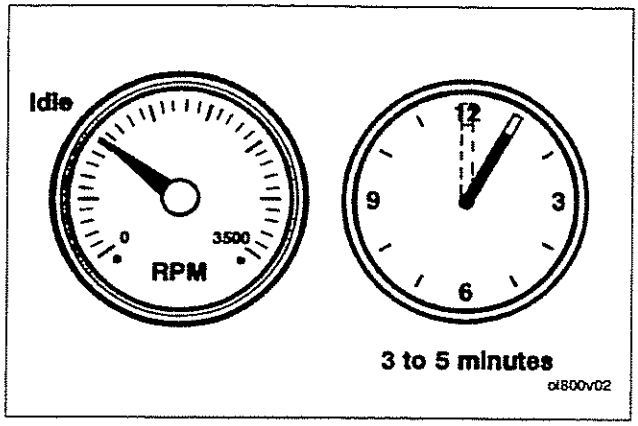

Idle the engine three to five minutes between 700 and 900 RPM (if using idle feature) before switching to Rated Speed RPM.

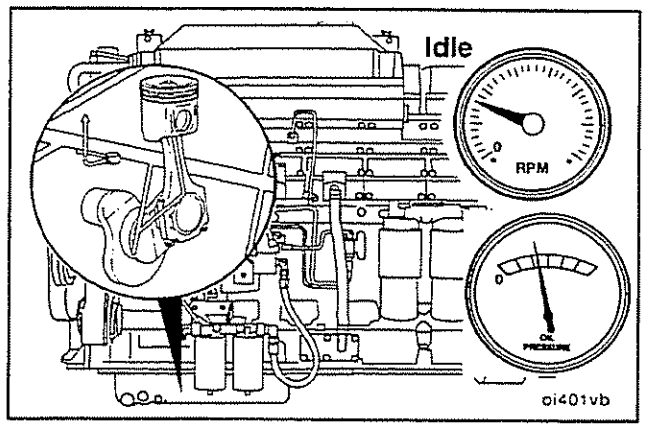

When starting a cold engine, increase the engine speed (RPM) slowly from Idle to Rated Speed to provide adequate lubrication to the bearings and to allow the oil pressure to stabilize.

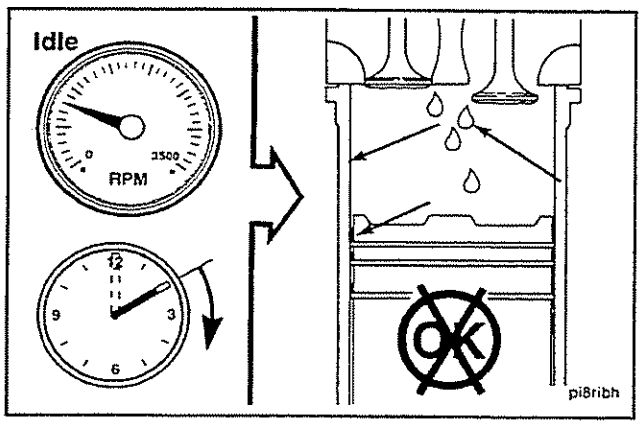

Do **not** idle the engine for excessively long periods. Long periods of idling, for more than 10 minutes, can damage an engine because combustion chamber temperatures drop so low the fuel will **not** burn completely. This can cause carbon to clog the injector spray holes, buildup on piston rings and valves to stick.

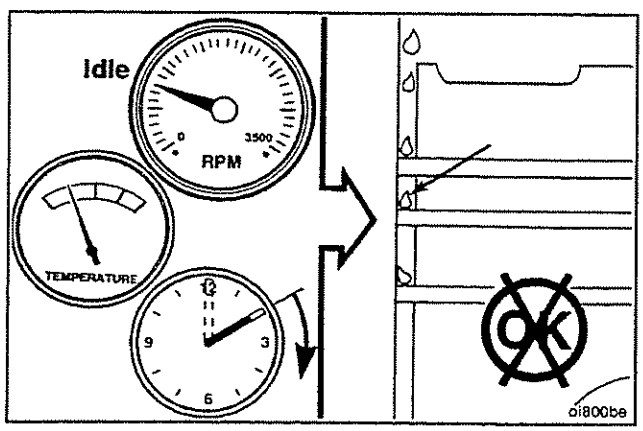

If the engine coolant temperature becomes too low, 60° C (140° F), raw fuel will wash the lubricating oil off the cylinder walls and dilute the crankcase oil; therefore, all moving parts of the engine will not receive the correct amount of lubrication.

Engine Shutdown

GENERAL INFORMATION

Allow the engine to idle three to five minutes after a full load operation before shutting it off. This allows the engine to cool gradually and uniformly.

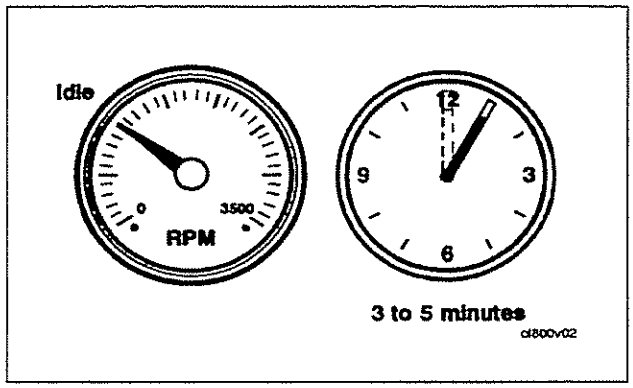

Engine-Generator Sets in Parallel

Speed Bias Input Type

Make necessary point-to-point connections as schematically shown in the Woodward and Barber-Colman Multi-Unit wiring sections in this bulletin.

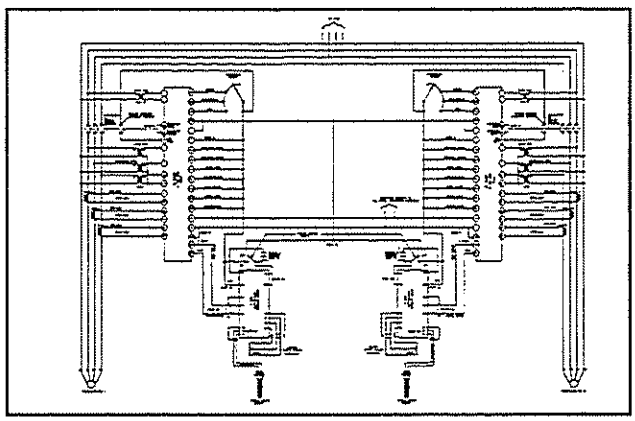

Change the Speed Bias Input Type to the correct setting using the INSITE™ QST30 G-Drive electronic service tool. Refer to the Electronic Service Tool Adjustments (Features and Parameters) section on page 45 to select the correct Speed Bias Input Type.

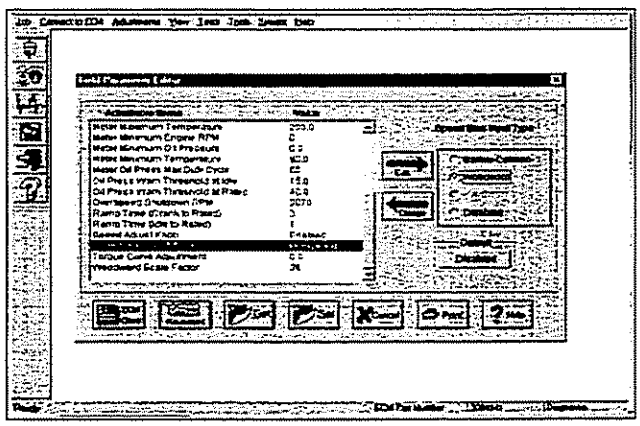

The factory **default setting** for Speed Bias Input Type is **Disabled**.

Speed Bias Scale Factors

Adjustments to the Woodward or Barber-Colman Scale Factors (similar to intermediate Woodward or Barber-Colman Gain adjustments) should not be made to improve system stability and/or response times, unless the individual QST30 ECM, and Woodward or Barber-Colman Gain adjustments fail to provide required performance.

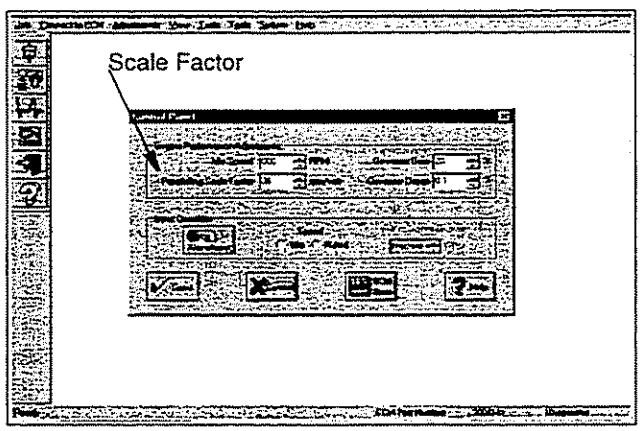

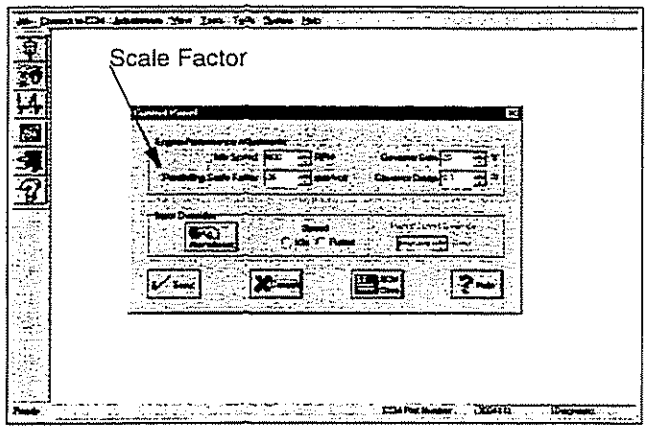

If required, the Woodward and Barber-Colman Scale Factor settings can be adjusted using the INSITE™ QST30 G-Drive electronic service tool. Refer to the following sections to adjust these Scale Factors:

- Adjustments (Features and Parameters) on page 45
- Tools (Control Panel) on page 50

The factory **default setting** for Barber-Colman Scale Factor is **1100 rpm/volt**. The factory **default setting** for Woodward Scale Factor is **36 rpm/volt**.

DYNA II Analog ILS Generator Sets (Refer to Barber-Colman Analog diagram on page 75)

DYNA II Auto-Synchronizer

The DYNA II Auto-Synchronizer (P/N DYN2 90200) can be used with the Cummins QST30 G-Drive governor and DYNA II Analog Isochronous Load Sharing Control to automatically synchronize one generator with another or with a bus. The Auto-Synchronizer eliminates the risk of operator error inherent with manual synchronizing.

The figure illustrates the wiring of two engine generator sets having Cummins QST30 G-Drive governors, DYNA II Analog Isochronous Load Sharing controls and DYNA II Auto-Synchronizers. Additional engine generator sets can be paralleled by wiring them at the point designated, PARALLELING LINES TO OTHER SYSTEMS.

NOTE: The Cummins QST30 G-Drive governors provide independent overspeed protection for each individual engine control system.

Note For Auto-Synchronizer

1. a. Closing a contact between 12 and 13 allows the Auto-Synchronizer to perform as a speed matching unit. The speed and phase of the incoming generator are controlled and a contact is closed to drive a circuit breaker. Once the circuit breaker is closed the contact between 12 and 13 should be opened. Another method would be to use the "Output Hold" dip switch, SW1, on the front of the unit.

   b. Open contacts or no jumper between 12 and 13 allows the Auto-Synchronizer to still sense any error, but it does not provide any control or contact closure.

2. Phasing of voltage potential to the Auto-Synchronizer is necessary to keep each signal in its correct phase relationship. If the generator voltage is not the same as the voltage rating of the Auto-Synchronizer, step-down transformers are required. The step-down transformers require a nominal 7 VA/PHASE for the Generator input and 2 VA/PHASE for the Bus input.

3. Connections to terminals 1-3 or 2-3 and 4-6 or 5-6 of the Auto Synchronizer must be the same voltage potential. Applying generator voltage without applying bus voltage may cause the engine to run faster or slower than the desired speed. However, when bus voltage is applied, the Auto-Synchronizer will change engine speed to quickly match the generator to the bus frequency.

Notes for Isochronous Load Sharing Module

4. Select the ILS current transformers to provide 2.5 to 5.0 amperes at full rated load. Current transformers require nominal 12.5 VA/PHASE at 5.0 amperes.

5. Step-down potential transformers require a nominal 6 VA/PHASE for the ILS.

6. Observe current and potential transformer markings when wiring system because it is necessary to keep each signal in its correct phase relationship to each other.

7. If the "load pulse" function is not being used, set the "load pulse" potentiometer fully counterclockwise.

8. The Droop-isochronous switch is not required if the system is always operated in the isochronous mode.

Notes for Isochronous Load Sharing Module (continued)

9. The QST30 G-Drive controller has a built in adjustable ramp, which is automatically enabled when the Idle/Rated mode is switched to Run. Do not use the ramp built in the analog ILS.

10. When neither terminal 17 or 18 are wired externally, jumper terminal 18 to ILS terminal 15.

General System Notes

11. Power switch current rating: 10 amps.

12. System battery supply. If more than one engine is started using the same battery supply, use a separate battery supply for the governor system.

13. If each generator has a separate power supply, connect the negative of all power supplies together for a common reference.

14. Use shielded and twisted leads as shown.

15. Customer supplied 24 VDC ECM power supply for Run Signal via pin-24 in OEM/Customer ECM "B" connector.

16. To help avoid possible noise induced instabilities, it is recommended the customer use the customer supplied Quantum 30 remote speed adjust pot feature and avoid utilizing a DYNA II Analog ILS remote speed selector rheostat.

17. Pins 16, 21, 22, 23 and 38 on Cummins Supplied 'A' connector (B+, B+ Sensing and Engine Speed Sensor).

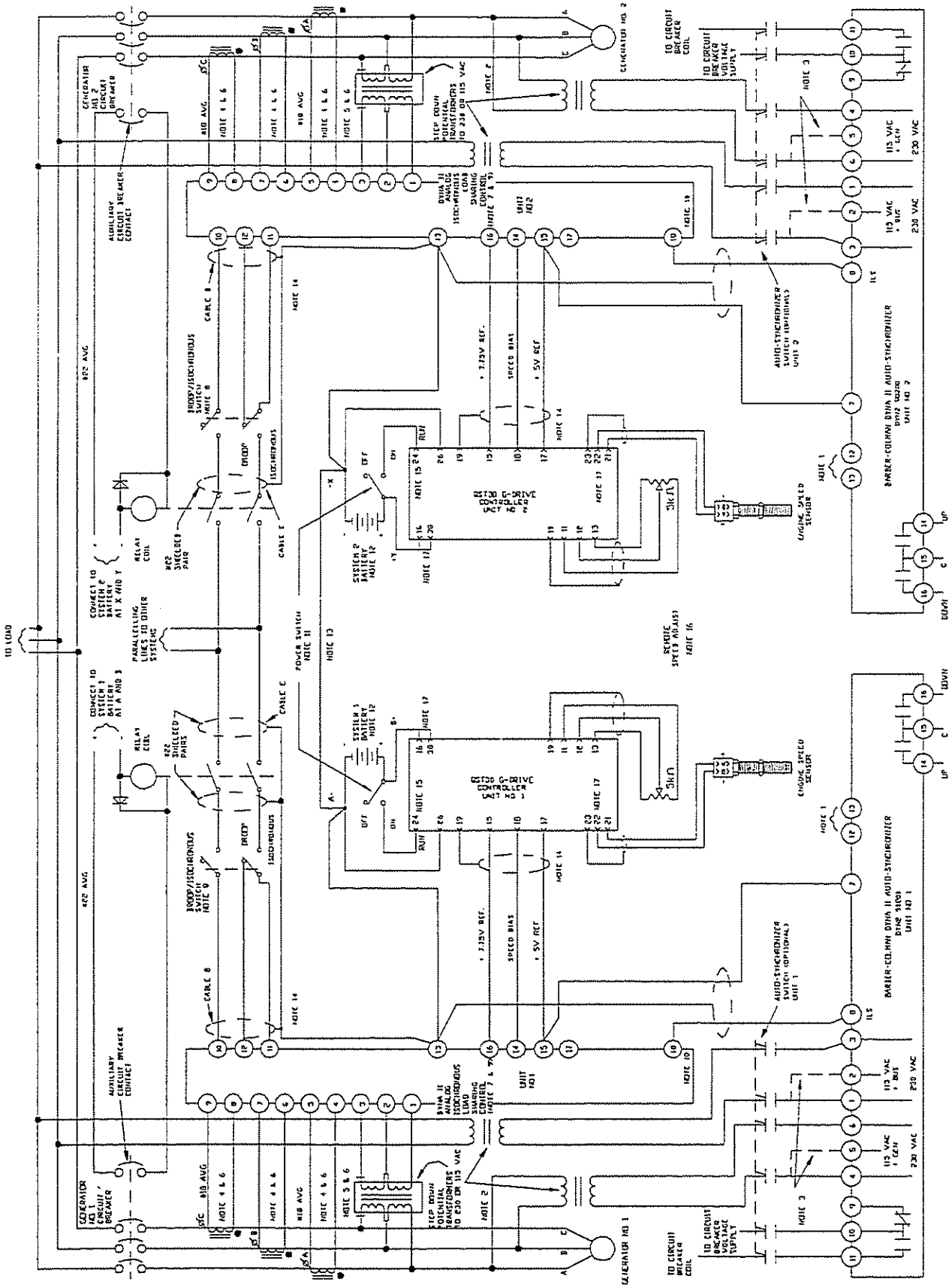

Load sharing control with customer mounted QST30 g-drive controllers, digital Barber-Colman auto-synchronizing and analog Barber-Colman isochronous load sharing control.

THIS PAGE LEFT INTENTIONALLY BLANK

DYNA II Digital ILS Generator Sets (Refer to Barber-Colman Digital Diagram on page 79)

DYNA II Auto-Synchronizer

The DYNA II Auto-Synchronizer (P/N DYN2 90200) can be used with the Cummins QST30 G-Drive governor and DYNA II Digital Isochronous Load Sharing Control to automatically synchronize one generator with another or with a bus. The Auto-Synchronizer eliminates the risk of operator error inherent with manual synchronizing.

The figure illustrates the wiring of two engine generator sets having Cummins QST30 G-Drive governors, DYNA II Digital Isochronous Load Sharing Controls, and DYNA II Auto-Synchronizers. Additional engine generator sets can be paralleled by wiring them at the point designated, PARALLELING LINES TO OTHER SYSTEMS.

NOTE: The Cummins QST30 G-Drive governors provide independent overspeed protection for each individual engine control system.

Notes For Auto-Synchronizer

1. a. Closing a contact between 12 and 13 allows the Auto-Synchronizer to perform as a speed matching unit. The speed and phase of the incoming generator are controlled and a contact is closed to drive a circuit breaker. Once the circuit breaker is closed the contact between 12 and 13 should be opened. Another method would be to use the "Output Hold" dip switch, SW1, on the front of the unit.

   b. Open contacts or no jumper between 12 and 13 allows the Auto-Synchronizer to still sense any error, but it does not provide any control or contact closure.

2. Phasing of voltage potential to the Auto-Synchronizer is necessary to keep each signal in its correct phase relationship. If the generator voltage is not the same as the voltage rating of the Auto-Synchronizer, step-down transformers are required. The step-down transformers require a nominal 7 VA/PHASE for the Generator input and 2 VA/PHASE for the Bus input.

3. Connections to terminals 1-3 or 2-3 and 4-6 or 5-6 of the Auto-Synchronizer must be the same voltage potential. Applying generator voltage without applying bus voltage may cause the engine to run faster or slower than the desired speed. However, when bus voltage is applied, the Auto-synchronizer will change engine speed to quickly match the generator to the bus frequency.

Notes For Isochronous Load Sharing Module

4. Select the ILS current transformers to provide 2.5 to 5.0 amperes at full rated load. Current transformers require nominal 12.5 VA/PHASE at 5.0 amperes.

5. Step-down potential transformers require a nominal 1 VA/PHASE for the ILS.

6. Observe current and potential transformer markings when wiring system because it is necessary to keep each signal in its correct phase relationship to each other.

7. If the "load pulse" function is not being used, set the "load pulse" potentiometer fully counterclockwise.

8. Droop-isochronous switch is not required if the system is always operated in the isochronous mode.

Notes For Isochronous Load Sharing Module (continued)

9. The QST30 G-Drive controller has a built in adjustable ramp, which is automatically enabled when the Idle/Run mode is switched to Run. Do not use the ramp built in the digital ILS.

10. When neither terminal 17 or 18 are wired externally, wire terminal 18 to ILS terminal 15.

General System Notes

11. Power switch current rating: 10 amps.

12. System battery supply. If more than one engine is started using the same battery supply, use a separate battery supply for the governor system.

13. If each generator has a separate power supply, connect the negative of all power supplies together for a common reference.

14. Use shielded and twisted leads as shown.

15. Customer supplied 24 VDC ECM power supply for Run Signal via pin-24 in OEM/Customer ECM "B" connector.

16. To help avoid possible noise induced instabilities, it is recommended the customer use the customer supplied Quantum 30 remote speed adjust pot feature and avoid utilizing a DYNA II Digital ILS remote speed selector rheostat.

17. Pins 16, 21, 22, 23 and 38 on Cummins Supplied 'A' connector (B+, B+ Sensing and Engine Speed Sensor).

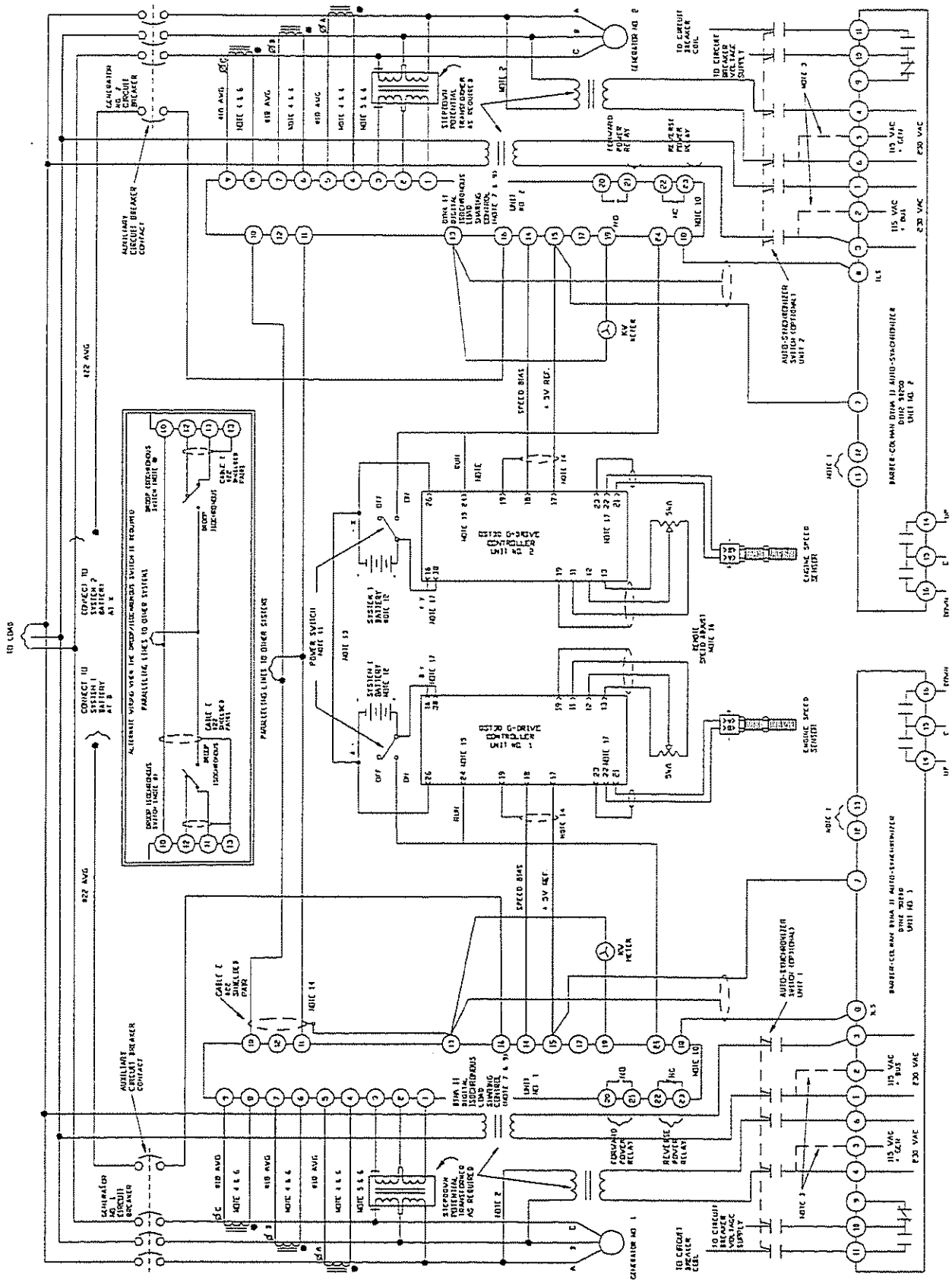

Load sharing control with customer mounted QST30 g-drive controllers, digital Barber-Colman auto-synchronizing and digital Barber-Colman isochronous load sharing control.

THIS PAGE LEFT INTENTIONALLY BLANK

Woodward Analog SPM-A and AGLC Generator Sets (Refer to Woodward Analog Diagram on page 83)

SPM-A Auto-Synchronizer

The SPM-A Auto-Synchronizer (P/N 9905-01) can be used with the Cummins QST30 G-Drive governor and the Analog Woodward Load Sensor Control to automatically synchronize one generator with another or with a bus. The SPM-A Synchronizer eliminates the risk of operator error inherent with manual synchronizing.

The figure illustrates the wiring of two engine generator sets having Cummins QST30 G-Drive governors, Load Sensor and AGLC load sharing controls and SPM-A auto-synchronizers. Additional engine generator sets can be paralleled by wiring them at the point designated, OTHER SYSTEM LOAD SHARING LINES.

NOTE: The Cummins QST30 G-Drive governors provide independent overspeed protection for each individual engine control system.

Notes for SPM-A Auto-Synchronizer

1. If the generator or bus voltages are not the same as the rating of the bus or generator sensing inputs, step-down transformers are required.

   Bus sensing step-down transformers (input terminals 6 thruogh 9) must be rated at a minimum of 0.1 VA and generator sensing step-down transformers (input terminals 2 through 5) must be rated at a minimum of 16.3VA/PHASE.

   Jumpers shown are for 115 VAC input. Consult Woodward for 190 to 260 VAC operation.

   Applying generator voltage without applying bus voltage may cause the engine to run faster or slower than the desired speed. However, when bus voltage is applied, the SPM-A will change engine speed to quickly match the generator to the bus frequency.

   NOTE: Minimum generator sensing PT rating allows for power draw of SPM-A, AGLC and Generator Load Sensor.

2. Proper phasing of voltage potential to the bus and generator PT's and SPM-A bus and generator inputs is necessary to keep each signal in its correct phase relationship. Failure to ensure proper phasing could potentially result in out-of-synch paralleling and subsequent hardware damage.

3. Breaker close relay contacts rated at 10 amps resistive and 6 amps inductive at 28 VDC, 3 Amps resistive and 2 amps inductive at 115 VAC, and 1.5 amps resistive and 1.0 amps inductive at 230 VAC.

Notes for Load Sensor and Automatic Load Control (AGLC)

4. Select current transformers to produce 5.0 amperes secondary current at full rated load. Current transformers require at least 0.1VA/PHASE at 5.0 amperes.

5. Observe current transformer markings as it is necessary to keep each signal in its correct phase relationship to each other.

6. Jumper 17 to 18 and 19 to 20 on Load Sensor when potential input terminals 1 through 3 is 95 to 130 VAC phase-to-phase (50 - 400 Hz.). Consult Woodward for 190 to 260 VAC option.

Notes for Load Sensor and Automatic Load Control (AGLC) (continued)

7. Terminals 15 and 16 on Load Sensor shown with jumper for isochronous load sharing. Open terminals 15 and 16 for droop load sharing.

8. Internal relay de-energizes to state shown when Unload Trip Level is reached on Unload to issue breaker open command. Breaker open relay contact ratings:

	Resistive	Inductive	Motor	Lamp
28VDC	10 Amp	6.0	3.0	1.0
115V, 400 Hz	5 Amp	2.5	3.0	0.8
115V, 60 Hz	3 Amp	2.0	1.5	0.5

9. Jumper 1 to 2 and 3 to 4 on AGLC for potential inputs of 105 to 132 VAC phase-to-phase. Consult Woodward for 210 to 264 VAC option.

General System Notes

10. Power switch current rating: 10 amps.

11. System battery supply. If more than one engine is started using the same battery supply, use a separate battery supply for the governor system.

12. If each generator has a separate power supply, connect the negative of all power supplies together for a common reference.

13. Use shielded and twisted leads as shown.

14. Customer supplied 24 VDC ECM power supply for Run Signal via pin-24 in OEM/Customer ECM "B" connector.

15. Pin 16, 21, 22, 23 and 38 on Cummins Supplied 'A' connector (B+, B+ Sensing and Engine speed Sensor).

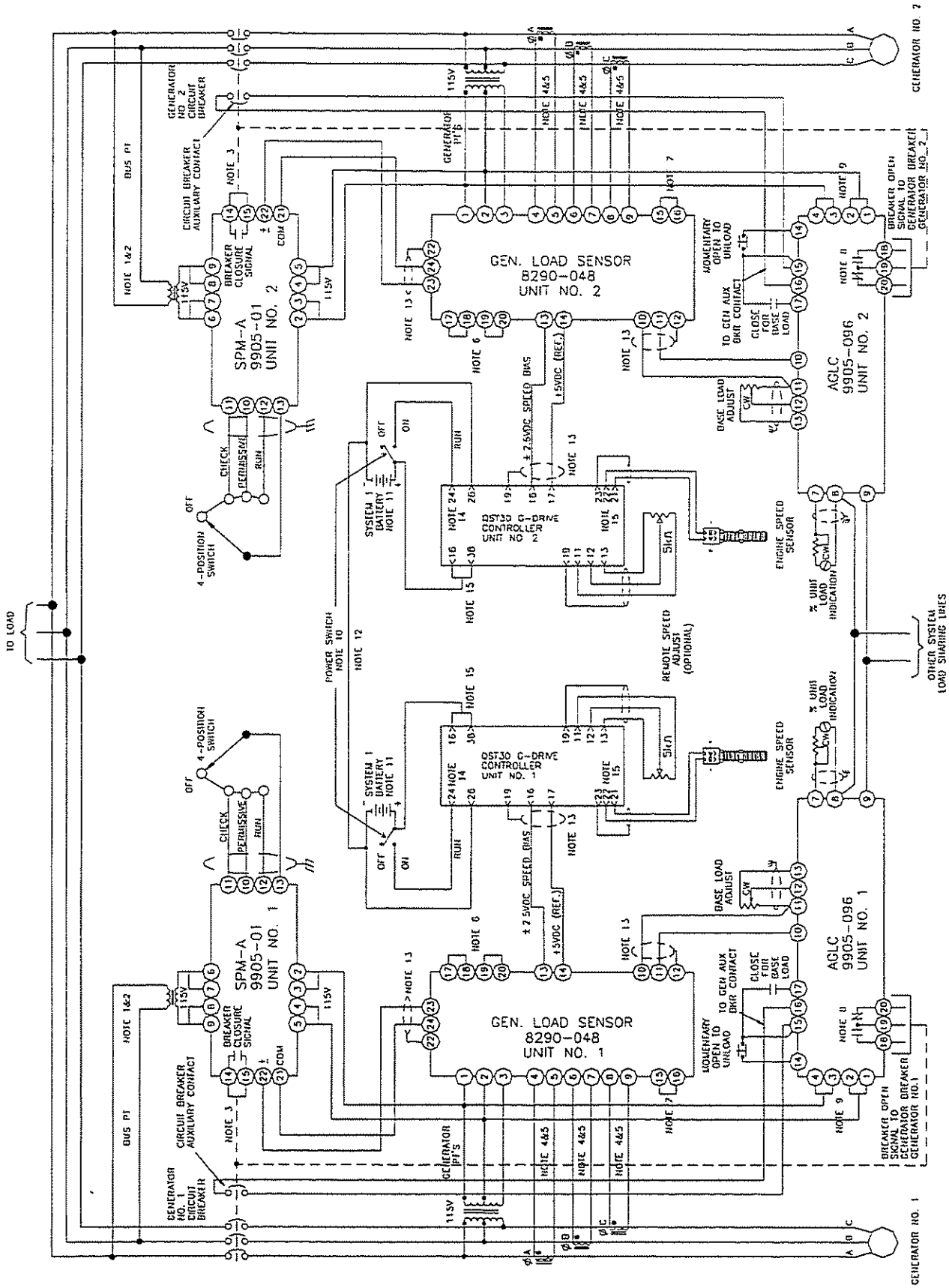

Load sharing control with customer mounted QST30 G-Drive controllers, analog Woodward SPM-A auto-synchronizing, and analog Woodward Load Sensor and AGLC load sharing control.

THIS PAGE LEFT INTENTIONALLY BLANK

Woodward Digital DSLC Generator Sets (Refer to Woodward Digital Diagram on page 87)

DSLC (Digital Synchronizer and Load Control)

The Woodward DSLC Synchronizer and Load Controller can be used with the Cummins QST30 G-Drive governor to automatically synchronize one generator with another or with a bus. The DSLC eliminates the risk of operator error inherent with manual synchronizing. In addition to synchronizing, the DSLC provides load sensing, automatic generator loading /unloading along with isochronous load sharing.

The figure illustrates the wiring of two engine generator sets having Cummins QST30 G-Drive governors and DSLC Synchronizer and Load Controllers. Additional engine generator sets can be paralleled by wiring them at the point designated, LONWORKS NETWORK TO ALL DIGITAL GENERATOR CONTROLS. The diagram as drawn shows a 120 VAC Wye configuration. Other potential configurations are 240 VAC Wye, 120 VAC and 240 VAC Open Delta configurations. You should consult pertinent Woodward technical manuals for the proper wiring in the case of these other configurations.

NOTE: The Cummins QST30 G-Drive governors provide independent overspeed protection for each individual engine control system.

Notes for DSLC

1. If the generator voltage is not the same as the rating of the bus or generator voltage sensing inputs (65 - 150 VAC, 45 - 66 Hz.), step-down transformers are required. Bus or generator step-down transformers require at least 0.1 VA/PHASE. Applying generator voltage without applying bus voltage may cause the engine to run faster or slower than the desired speed. However, when bus voltage is applied, the DSLC will change engine speed to quickly match the generator to the bus frequency.

2. Proper phasing of voltage potential to the bus and generator PT's and DSLC bus and generator inputs is necessary to keep each signal in its correct phase relationship. Failure to ensure proper phasing could potentially result in out-of-synch paralleling and subsequent hardware damage.

3. Select current transformers to produce 5.0 amperes secondary current at full rated load. Current transformers require at least .01 VA/PHASE at 5.0 amperes.

4. Observe current transformer markings as it is necessary to keep each signal in its correct phase relationship to each other.

5. Breaker close and open functions may require customer supplied relay. DSLC relay drivers are rated at 18-40 VDC, 200 mA.

6. Required DSLC power supply input is 18 to 40 VDC continuous.

7. Termination jumpers (terminals 41 and 42) are required on units located on each end of LonWorks network.

8. Properly ground the DSCL chassis for proper safety and shielding (Woodward DSLC chassis provides for case grounding stud).

General System Notes

9. Power switch current rating: 10 amps.

10. System battery supply. If more than one engine is started using the same battery supply, use a separate battery supply for the governor system.

11. If each generator has a separate power supply, connect the negative of all power supplies together for a common reference.

12. Use shielded and twisted leads as shown.

13. Customer supplied 24 VDC ECM power supply for Run Signal via pin-24 in OEM/Customer ECM "B" connector.

14. Pin 16, 21, 22, 23 and 38 on Cummins Supplied 'A' connector (B+, B+ Sensing and Engine Speed Sensor).

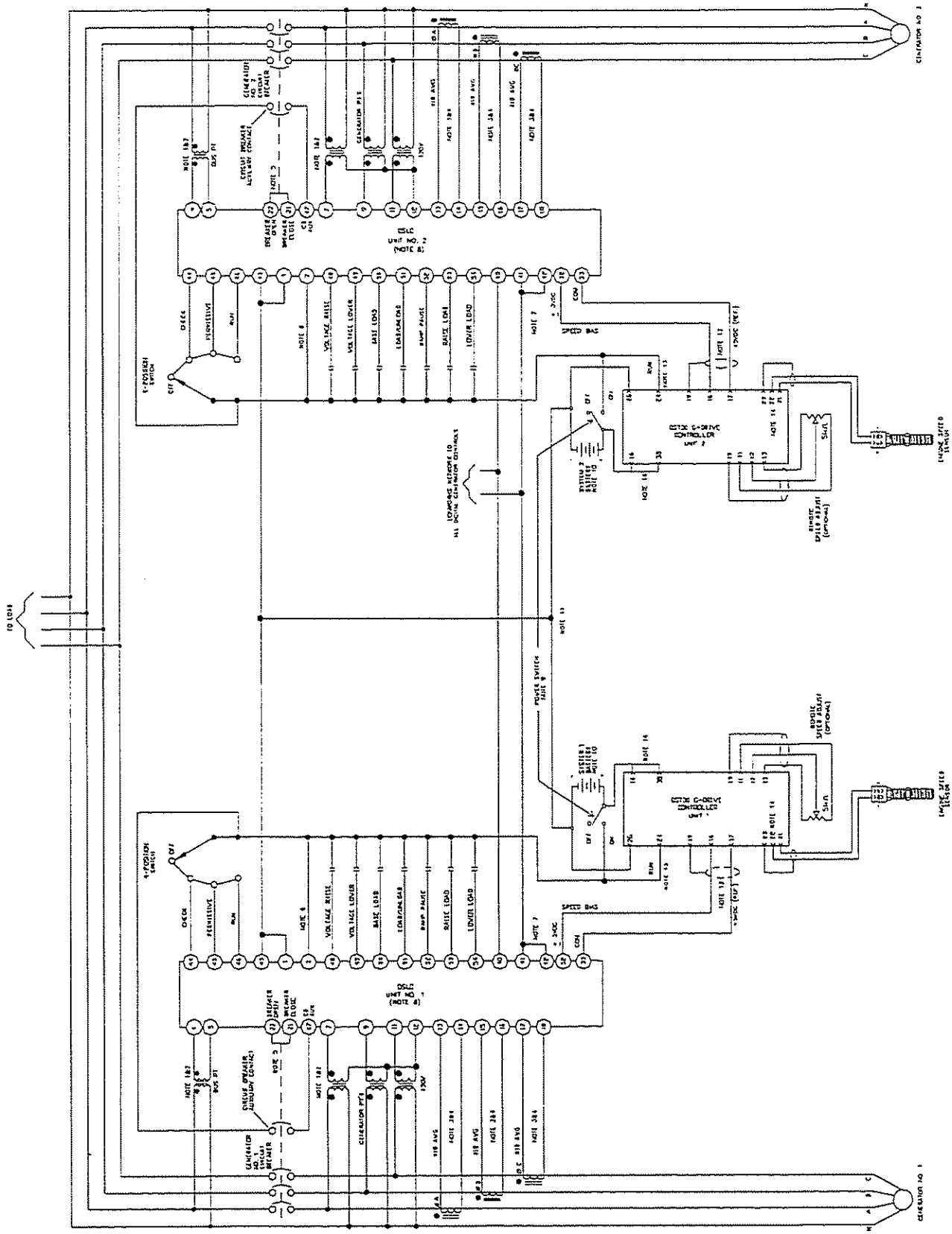

Load sharing control with customer mounted QST30 G-Drive controllers and digital Woodward auto-synchronizing and isochronous load sharing control (Woodward DSLC).

THIS PAGE LEFT INTENTIONALLY BLANK

Electrical Symbols

Name	Symbol
Battery	
Alternator (Frequency Source)	
Resistor	
Variable Resistor (Potentiometer) — 3 Terminal Device	
Variable Resistor (Potentiometer) — 2 Terminal Device	
Terminal Strip	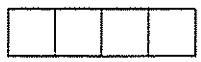
Switches:	
(N.O.) Normally Open	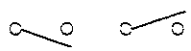
(N.C.) Normally Closed	
Transfer	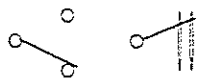
Transfer 3 position	
Relay Contact:	
(N.O.) Normally Open	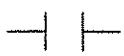
(N.C.) Normally Closed	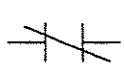

Name	Symbol
Transfer	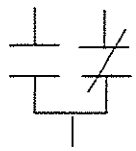
Capacitor	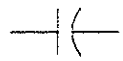
Fuse	
Circuit Breaker	
Jumper Wire	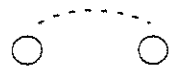
Coil	
Magnetic Core	
Transformer	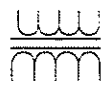
Variable Reluctance Magnetic Pickup	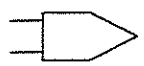
Female Contact	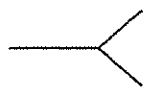
Male Contact	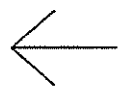

Name	Symbol
Shields:	
Shielded Wire	
Shielded Pair	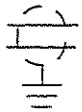
Crossing of Conductors (wires) not Connected	
Junction of Connected Conductors (wires)	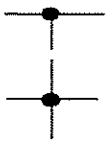
Grounded Chassis or Frame Connection	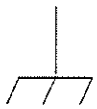

Conducting connection to a chassis or frame, of equivalent chassis connection of a printed wiring board. The chassis or frame (or equivalent chassis connection of a printed wiring board) may be at a different potential than the earth or structure in which this chassis or frame (or printed wiring board) is mounted.

Direct Conducting Connection to Circuit Return	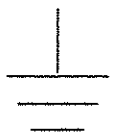

Conducting connection to a structure that services a function similar to that of an earth ground (that is, a structure such as a frame of an air, space or land vehicle that is not conductively connected to earth.)

Name	Symbol
Earth Safety Ground	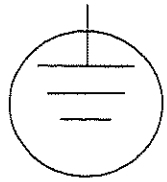

** This symbol may be used in place of symbol for direct conducting connection to circuit return to indicate a ground connection having a specified protective function (e.g., for protection against electrical shock in case of a fault).

** Ref. Electrical and Electronics Graphic Symbols and abbreviated name.

Glossary of Power Terms

A.C. – See Alternating Current.

Alternating Current – Electrical current which repeatedly varies from zero to a positive maximum value to zero to a negative maximum value and back to zero at a periodic rate. Since the applied voltage continually reverses polarity, the resultant current flow alternates in direction within the circuit.

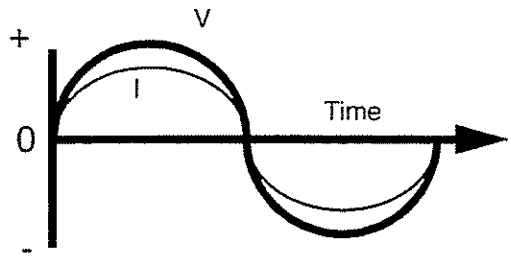

Alternating Current = I
Applied Voltage = V

AMP -- An abbreviation for the term Ampere.

Ampere -- The unit of measure of electrical current flow. One ampere of current will flow when one volt of electrical potential is applied across one ohm of resistance.

Auto-Transformer -- A transformer of single coil construction in which both the primary and secondary connections are made on the same coil but use different taps.

B- -- Symbol used to designate the negative polarity of a D.C. voltage supply.

B+ -- Symbol used to designate the positive polarity of a D.C. voltage supply.

Capacitance -- The property of a device which resists changes in voltage. In an A.C. circuit, a capacitive load will cause the voltage to lag behind the current flow. Stated more conventionally, the current leads the applied voltage. A capacitive load is, therefore, a leading power factor load (see Power Factor).

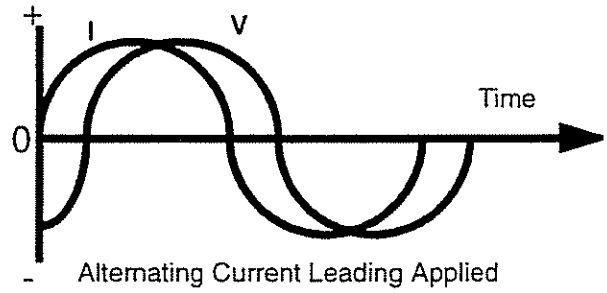

Alternating Current Leading Applied Voltage Caused by Capacitive Load

Capacitor – A device possessing the property of capacitance. A typical capacitor consists of two conducting surfaces separated by an insulating material. A capacitor stores electrical energy, blocks the flow of D.C. and permits the flow of A.C. to a degree largely dependent on the capacitance and the frequency of the applied A.C.

Circuit -- An electrical path through which an electric current may flow from a voltage supply to a load and return. A closed or complete circuit is one where current is flowing. An open circuit is where the path has been disrupted, such as an open switch or circuit breaker, thus stopping current flow.

Circuit Breaker -- A protective device for opening a circuit where current flow exceeds a predetermined value.

Circulating Current – Also called Cross Current. Current which flows between paralleled generators, most apparent with no external load on the paralleled generators. Circulating current is caused (1) by unequal excitation of the generators (reactive current, which may be reduced by changing the voltage regulator adjustment or connections); and (2) by unequal power from the engines that are driving the generators real current (and power) which can be eliminated by governor adjustments.

Conductor – A wire cable, bus, or other device intended to distribute current from the supply to the load. Technically, a conductor is any device which will permit the flow of current.

Contactor -- A device for opening and closing an electric circuit. Contactors are normally used in motor circuits where large amounts of current are controlled.

Cross Current -- See Circulating Current.

Cross Current Compensation -- A term, no longer approved, for a circuit arrangement that made paralleled generators share the reactive component of load current in proportion to the generator ratings. The circuit arrangement could also essentially eliminate the reactive component of circulating current flowing between paralleled generators (See Reactive Differential (Cross Current) Compensation and Reactive Droop Compensation).

Current (Electrical, Symbol I) -- The rate of transfer of electricity from one point to another. Current is usually a movement of electrons, but may also be a movement of positive ions, negative ions, or holes. Current is usually measured in amperes.

Cycle 00 -- A complete set of events before repetition occurs. In alternating current or voltage, a cycle starts at zero, continues to a maximum positive value returns to zero, continues to a maximum negative value, and is completed at zero.

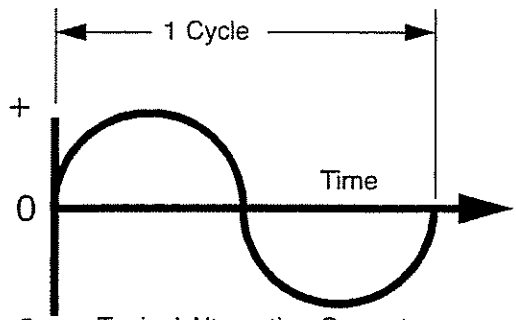

Typical Alternating Current
or Voltage Cycle

D.C. -- See Direct Current.

Diode -- A two terminal solid-state device which permits current to flow in one direction, but not in the other. In alternating current circuits, a diode will permit one half cycle to flow but will resist the flow of the opposite half cycle of current. Thus, alternating current is converted to direct current by a diode.

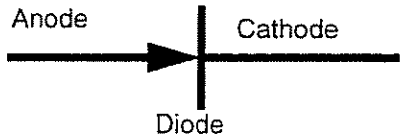

Diode

Direct Current (D.C.) -- An electric current that flows in one direction only. Conventional direct current is defined as flowing from positive to negative in the circuit outside the source (example: a battery or combination of diodes). Conventional current flows in the direction of the arrow through a diode. Electron flow and U.S. Navy designated current flow in the opposite diretion.

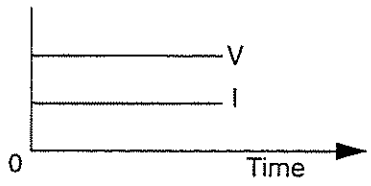

Direct Current I
Applied Voltage V

Distribution Panel -- A control panel containing circuit breakers, transfer switches, and other control devices which distribute the electrical power, such as from a generator set to the loads.

Double Pole Switch -- A switch which has two sets of contacts which operate on two independent circuits at the same time.

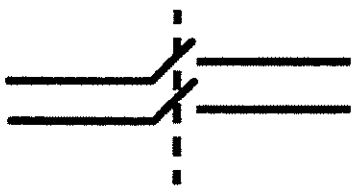

Typical Double Pole Switch Shown as a
Single Throw Type in the "Off" Position

Double Throw Switch -- A Switch which has a common pole that is closed to one contact and open to a second contact in one switch position. With switch operation, the first contact opens and the second contact closes to the common pole.



Typical Double Throw Switch
Shown as a Single Pole Type

E -- Symbol used to represent electrical potential (voltage).

Earth Ground -- An intentional connection made between the earth and the metallic frame of electrical equipment as a means to eliminate possible voltage hazards to personnel. Earth Ground also serves, in some cases, to reduce electrical interference in sensitive circuits such as television and radio equipment.

EMI -- An abbreviation for the term electromagnetic interference which is sometimes caused by SCR type devices and evident in radio and television operation.

Energy -- The capability of performing work.

Frequency -- The number of complete cycles of alternation current per unit of time. Typically, frequency is expressed in cycles per second or Hertz (HZ).

Frequency Droop -- A decrease in steady state frequency output of a generator caused by an increase in load. This decrease in frequency from the no load frequency is expressed as a percentage of the full load frequency or:

$$\%F_{Droop} = \frac{(F_{NL} - F_{FL}) \times 100}{F_{FL}}$$

Where: $\%F_{Droop}$ = *Percent Frequency Droop*
F_{NL} = *No Load Frequency*
F_{FL} = *Full Load Frequency*

A three percent frequency droop may be used to provide governor stability and for load sharing between paralleled generator sets.

Frequency Meter -- An instrument deigned to measure the frequency of an alternation current system.

Gain -- The increase in signal power that is produced by an amplifier, usually given as the ratio of output to input voltage, current, or power. In generator set systems, a low gain setting on the electric governor or voltage regulator provides a relatively small signal to correct variations of frequency or voltage. The frequency and/or voltage may wander or be slow in recovering to stable conditions after a load change. A high gain setting provides a relatively large signal to correct variations of frequency and/or voltage. If the gain is set too high, the electric governor or voltage regulator may over-correct. This may produce unacceptable hunting of the frequency and/or voltage.

Gate -- The third terminal of an SCR to which a voltage must be applied before the SCR will conduct.

Governor -- A device which controls engine speed and thus the generator output frequency.

Ground -- A connection, either accidental or intentional, between an electrical potential and the earth or some conducting body serving in place of the earth.

Heat Sink -- A device which absorbs heat from electrical devices such as diodes and SCR's and dissipates the heat to the surrounding air.

Hertz -- A term equivalent to cycles per second (See Frequency).

Hunting -- Oscillation in frequency or in voltage where steady state conditions are not reached, particularly after a load transient change.

I -- Symbol used to represent current.

Impedance -- The opposition to the flow of alternating current.

Induced Voltage -- The voltage which is produced by relative motion between a wire and a magnetic field.

Inductance -- The property of a device which resists changes in current. In an A.C. circuit, an inductive load will cause the current to lag behind the applied voltage. Stated more conventionally, the current lags the applied voltage. An inductive load is therefore a lagging power factor load (see Power Factor).

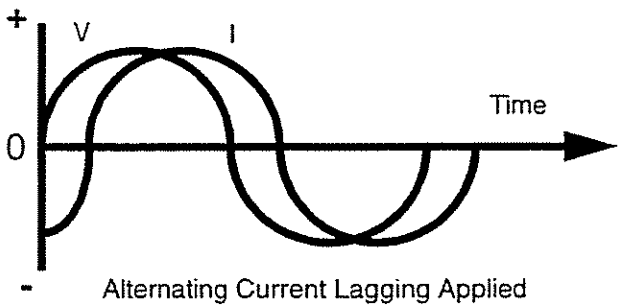

Alternating Current Lagging Applied Voltage Caused by Inductive Load

Inductor -- A device possessing the property of inductance. An inductor stores electrical energy, passes D.C., and opposes the flow of A.C. to a degree largely dependent on the inductance and the frequency of the applied A.C. A typical inductor consists of a coil of wire.

In Phase -- Alternating currents or voltages are in phase with respect to each other if they cross through zero and reach their positive and negative maximum values together.

Insulation -- A non-conductive material such as rubber or plastic intended to prevent current from flowing. Technically, insulation is any material which stops the flow of current.

Isochronous -- As it applies to engine governors, maintaining constant steady state speed regardless of the load within the rating of the engine. Thus, a generator set is said to be isochronous if the frequency remains the same regardless of load.

Normally Closed (Symbol N.C.) -- As applied to a magnetically operated device such as a valve or the contacts of a relay, Normally Closed indicates that the valve or the relay contacts are closed when no power is supplied to the operating magnet.

Normally Open (Symbol N.O.) -- As applied to a magnetically operated device such as a valve or the contacts of a relay, Normally Open indicates that the valve or the relay contacts are open when no power is supplied to the operating magnet.

Ohm -- The unit of measure of electrical resistance. One ohm of resistance will allow a current of one ampere to flow with an applied potential of one volt.

Ohmmeter -- An instrument for measuring electrical resistance.

Ohm's Law -- A fundamental law expressing the relationship between voltage, current, and resistance in electrical circuits. The law states that E = IR or voltage is equal to current times resistance.

Open Circuit -- 1) A circuit that does not provide a complete path for the flow of current. 2.) A condition of an electrical circuit caused by the breaking of continuity of one or more conductors of the circuit; often an undesired condition. 3) An arrangement of conductors and equipment that depends upon lack of continuity for operation, as open-circuit telegraphy; a circuit in which continuity is incomplete or interrupted.

Oscillogram -- The permanent record produced by an oscillograph, or a photograph of the trace produced by an oscilloscope.

Oscillograph -- A measurement device for determining waveform by recording the instantaneous values of a quantity such as voltage as a function of time.

Oscilloscope -- An instrument primarily for making visible the instantaneous value of one or more rapidly varying electrical quantities as a function of time or of another electrical or mechanical quantity.

Oscilloscope Dual Beam -- An oscilloscope in which the cathode-ray tube produces two separate electron beams that may be individually or jointly controlled.

Parallel Connection -- An electrical connection in which the input of one element is connected to the input of another element. The output connections are similarly connected together thus providing two or more paths for current to flow.

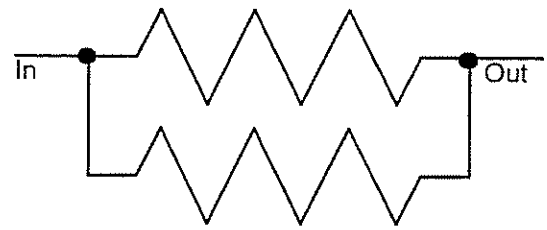

Parallel Connection

Parallel Operation -- The method by which two or more generators having the same voltage and frequency characteristics are connected to a common load.

Permanent Magnet Generator -- A generator which uses permanent magnets to create a magnetic field. As applied to Cummins Generators; a permanent magnet generator, within the main generator, supplies the power to the voltage regulator which in turn supplies the power to the exciter field. The permanent magnet generator still supplies power during a short circuit of the main generator. This permits the main generator to sustain high short circuit currents. The output of the permanent

magnet generator is electrically isolated from the main generator output and is not adversely affected by main generator output waveform distortion such as from SCR type loads.

PMG -- See Permanent Magnet Generator.

Polarity -- An electrical term which indicates the direction in which current flows in a conductor. In a direct current system, current flows in the same direction. In an alternating current system, current changes direction as the polarity of the A.C. voltage source changes.

Potential -- Another term to indicate voltage.

Potential Difference -- The difference in voltage between two points in a circuit.

Power -- Defined as the rate of performing work. Mechanical power is measured in horsepower or kilowatts. Electrical power is measured in kilowatts.

Power Factor -- The ratio of the true power (KW) requirements of a load to the apparent power (KVA) requirements of a load. The combined loads applied to a power source may have a resistive, capacitive, or inductive effect.

Resistive loads such as incandescent lighting or resistive heating elements cause no shift in the voltage/current wave forms and are, therefore, unity (1.0) power factor loads.

Inductive and capacitive loads, however, cause the voltage and current waveforms to shift with respect to one another. These types of loads are commonly called power factor loads (i.e., the power factor is less than 1.0).

See INDUCTANCE and CAPACITANCE for more information.

Power factor is frequently multiplied by 100 and expressed as a percentage.
The formula for power factor is:

$$Power\ Factor = \frac{True\ Power\ (KW)}{Apparent\ power\ (KVA)}$$

R -- Symbol used to represent resistance.

Reactive Differential (Cross Current) Compensation -- A circuit arrangement for operating generators in parallel with no generator voltage droop. Reactive Differential Compensation is accomplished by a differential interconnection of the secondaries of the generator current transformers used for Reactive Droop Compensation. This arrangement is not often used and is very difficult to set up when paralleling generators of different capacities.

Reactive Droop Compensation -- A circuit arrangement that creates a droop in generator output voltage that is proportional to the reactive load current. This circuit arrangement makes the paralleled generators share the reactive component of the load current in proportion to the generator ratings. It also can essentially eliminate the reactive component of circulating current which may flow between paralleled generators. The Reactive Droop Compensation arrangement is commonly called the Generator Paralleling Module.

Relay -- An electromechanical device having a magnetic coil which, when energized, opens or closes several sets of contacts.

Resistance -- Opposition to the flow of current.

Resistor (Symbol R) -- A device or component designed to have a definite amount of resistance. Resistors are used in circuits to limit current flow or to provide a voltage drop.

Resistor, Fixed -- A component which is used to control voltage and current by introducing a constant resistance of known value into the circuit.

Resistor, Variable -- Similar to a fixed resistor except the resistance value can be adjusted. The voltage adjust rheostat is a variable resistor.

Rheostat -- A variable resistor.

Series Connection -- An electrical connection in which the input of one element is connected to the output of another element providing only one path for current to flow.



Series Connection

Short Circuit -- An abnormal connection (including an arc) of relatively low resistance, whether made accidentally, or intentionally, between two points of different potential in a circuit. Equipment, not protected by fuse or circuit breakers, may be damaged by a short circuit.

Shunt Trip -- An electromechanical device which, when energized, trips the main line circuit breaker.

Single Pole Switch -- A switch which has only one set of contacts.



Typical Single Pole Switch Shown as a Single Throw Type in the "Off" Position

Single Throw Switch -- A switch which opens a set of contacts in one switch position and closes the contacts in the other position.



Typical Single Throw Switch Shown as a Single Pole Type in the "Off" Position

Speed Droop -- A decrease in steady state speed of an engine due to an increase in applied load. This decrease in speed from the no load speed is expressed as a percentage of full load speed or:

$$\%S_{Droop} = \frac{(S_{NL} - S_{FL}) \times 100}{S_{FL}}$$

Where: $\%S_{Droop}$ = *Percent Speed Droop*
S_{FL} = *Full Load Speed*
S_{NL} = *No Load Speed*

Solenoid -- An electromechanical device which when energized, acts on a movable core or plunger in the center of the energizing coil to perform mechanical work.

Solid-State -- A term which applies to electronic devices which are constructed using semiconductor material. Such devices include transistors, SCR's, and diodes.

Stability -- Freedom from undesired variations or oscillation. In generator set systems, the generator set is stable if it can maintain or quickly re-establish steady state conditions of voltage and frequency after a sudden load change.

Surge Suppressor -- A device capable of conducting current in either direction in the presence of high transient voltages thus protecting devices that could otherwise be damaged.

Synchronism -- The condition where two or more generators are operating at the same frequency and output voltage and are in phase with one another.

Synchronizing -- The procedure of matching the frequency, phase rotation, voltage, and phase relationship of one generator to another for purposes of paralleling the units onto a common bus.

Synchronous -- A generator whose output frequency is directly related (proportional) to the speed of the engine driving the generator.

Tachometer -- An instrument for measuring the rate of rotation expressed in revolutions per minute.

Temperature Drift -- A change in the value of a component caused by changes in operating temperature.

Terminal -- A mechanical device for making electrical connections.

Thyristor (SCR) -- A Silicon-Controlled Rectifier is a structure with an external connection (gate) to one of the inter layer. With no gate current, the SCR characteristic is that of a four-level diode.

Transformer -- Frequently, a device using a laminated iron core with a primary and secondary winding. A transformer changes some level of input (primary) voltage or current to a proportional output (secondary) voltage or current (see Current Transformer and Potential Transformer).

Transient -- A temporary change from the steady state conditions.

V -- Symbol used to represent voltage.

Volt -- The unit of measure of electrical potential (voltage). One volt of electrical potential will force a current of one ampere to flow through a resistance of one ohm.

Voltage -- Electrical potential or pressure which forces current to flow through a circuit.

Voltage Dip -- A temporary reduction in voltage generally resulting from an increase in load.

Voltage Droop -- A decrease in steady state voltage of a generator due to an increase in load applied. This decrease in voltage from the no load voltage is expressed as a percentage of the full load voltage or

$$\%V_{Droop} = \frac{(V_{NL} - V_{FL}) \, X \, 100}{V_{FL}}$$

Where: $\%V_{Droop}$ = *Percent Voltage Droop*
V_{NL} = *No Load Voltage*
V_{FL} = *Full Load Voltage*

Voltage Droop Compensation -- A system which permits paralleled generators to share the currents of a load in proportion to the generator set ratings.

Voltage Regulator -- A device which controls the voltage output of a generator at a preset value regardless of the amount of load applied.

Voltmeter -- An instrument designed to measure electrical potential or voltage.

ELECTRICAL SPECIFICATIONS

ALL CONTINUITY CHECKS
- OK (no open circuit) if less than 10 Ω

SHORTS TO GROUND
ESS circuits
- OK (no short circuits) if more than 10 kΩ

all other circuits
- OK (no short circuits) if more than 10 kΩ

SHORT CIRCUIT TO EXTERNAL VOLTAGE
- OK if less than 1.5 VDC

ECM Power Source
9 to 40 VDC

5 V POWER SUPPLY (Sensor and Switch)
@ ECM
- 4.75 to 5.25 VDC

@ Harness
- 4.75 to 5.25 VDC

SOLENOIDS
Fuel Shutoff Valve - 24 VDC
- Coil Resistance = 28 to 32 Ohms
- Voltage = 24 VDC

ECM CONNECTOR
Allen Screw Torque = 3 N·m [25 in-lb]

SENSOR SPECIFICATIONS

ENGINE SPEED SENSOR

First Coil Resistance = 840 Ω ± 10%
Second Coil Resistance = 1320 Ω ± 10%

OIL PRESSURE SENSOR

Torque = 14 [10 ft-lb]

Pressure (kPa)	Pressure [psi]	Voltage (V)
0	0	0.42 to 0.58
172	24	1.42 to 1.58
344	50	2.42 to 2.58
517	75	3.42 to 3.58
689	100	4.42 to 4.58

COOLANT TEMPERATURE SENSOR

Torque = 14 N•m [10 ft-lb]

Temperature (C)	Temperature (F)	Resistance (ohms)
0	32	30k to 36k
25	77	9k to 11k
50	122	3k to 4k
75	167	1250 to 1500
100	212	600 to 675

Component Specifications

Governor Control (ECM)

Operation

Governor Mode	: Isochronous to 10% droop
Steady State Stability	: <± .25%
Operating Input Frequency Range	: 2.4K to 5.0K Hz
Rated Speed Input Frequency (ESS)	: 1500 RPM - 3550 Hz
	: 1800 Rpm - 4260 Hz
Idle Speed Input Frequency Range (ESS)	: 1657 - 2130 Hz

Power

Operating Voltage	: 22.0 to 34.0VDC; 24VDC Recommended
Ground Polarity	: (-) Negative
Nominal Operating Current	: 3.5 amps at 24VDC
Maximum Operating Current	: 4.5 amps at 24VDC
Quiescent Current Draw	: 30 milliamps

Environmental

Ambient Operating Temp.	: -40° to 85°C [-40° to 185°F]
Maximum Temperature Drift	: Self compensating over operating range
Relative Humidity	: 0 to 95% non- condensing
Storage Temperature Range	: -40° to 85°C [-40° to 185°F]

Physical

Dimensions	: 204 mm X 227 mm X 46 mm [8.0 X 8.9 X 1.8 in.]
Weight	: 2.7 Kg [6.0 lb.]
Mounting	: Any position, off engine, typically in enclosure
Case Material	: Die Cast Aluminum

Protection Features

High Voltage Protection	: 35VDC for 24 hours continuous
Reverse of Supply Polarity	: Yes
Surge Protection	: 80VDC, 10 msec transient
Vibration Protection	:(Remote Control) Entire printed circuit board sealed with silicon-filled epoxy.

Magnetic Pickup Specifications

Thread Size	: M22 X 1.5
Tap Drill Size	: 19.50 mm
Proximity to Gear Teeth	: 0.71 - 1.07 mm [0.028 - 0.042] (Approx. 1/2 to 3/4 turn)
Temperature Range	: -55° to 105°C [-67°to 222°F]
Output at Cranking Speed	: 2.5VAC minimum
Maximum Output	: 50VAC
Coil Resistance	: First coil 840 Ω ± 10% Second coil 1320 Ω ± 10%

Remote Potentiometer Specifications (recommended)

Resistance	: 5K Ohms ± 5%
Linearity	: .25%
Travel	: 360° X10
Power Rating	: 2 Watts @ 70°C [158°F]
Insulation Rating	: 1000 M Ohms @ 500 VDC
Dielectric Strength	: 100V RMS
Operating Temperature Range	: -55°C to 105°C [-67°F to 221°F]

Part No.	Description
3886293	INSITE™ for QST30 G-Drive Electronic Service Tool
3163156	Electronic Service Tool Interconnect Cable
3825189	QST30 G-Drive Engine Wiring Repair Kit
3865337	Oil Pressure Sensor Unit
3865346	Water Temperature Sensor
3865349	Magnetic Pickup, Thread: M22 X 1.5
3094439	G1 - ECM
3094141	G2 - ECM
3094440	G3 - ECM
*TBD	Other QST30-G Engine Models
3094470	Engine Harness
3094469	ECM Harness
WR5002	1.5 m [5 ft.] Extension Harness
WR5005	3.1 m [10 ft.] Extension Harness
WR5006	6.1 m [20 ft.] Extension Harness
WR5007	ECM B Connector Kit
3092340	ECM B Connector Service Kit P/N

ECM Structure

Customer Interface Software Mandatory	Engine Control Module Dependent
G1 - DO 5006	G1 - PH 5705
G2 - DO 5005	G2 - PH 5703
G3 - DO 5004	G3 - PH 5706
Other QST30-G Engine Models-TBD*	Other QST30-G Engine Models-TBD*

Each engine model and rating has an individual ECM P/N (PH option) programed with rating torque curves and fuel limits. The PH dependent option is driven by a customer selected DO option for correct engine rating.

* Check with your local Cummins Distributer for proper DO option selection and PH option structure.

Electrical Diagnostic Tools

WHEN RUNNING DIAGNOSTICS OR TROUBLESHOOTING THE FUEL GOVERNING SYSTEM, THE FOLLOWING TOOLS SHOULD BE USED TO AVOID DAMAGE TO THE CONNECTIONS AND WIRING HARNESSES.

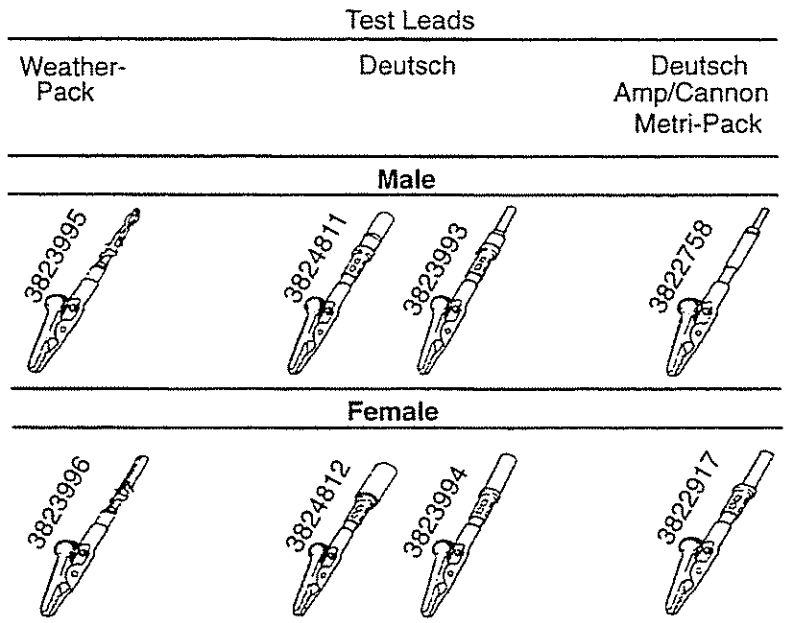

If damaged connections or wires are found they may be repaired using the following tools and electrical repair items:

Repair Tools

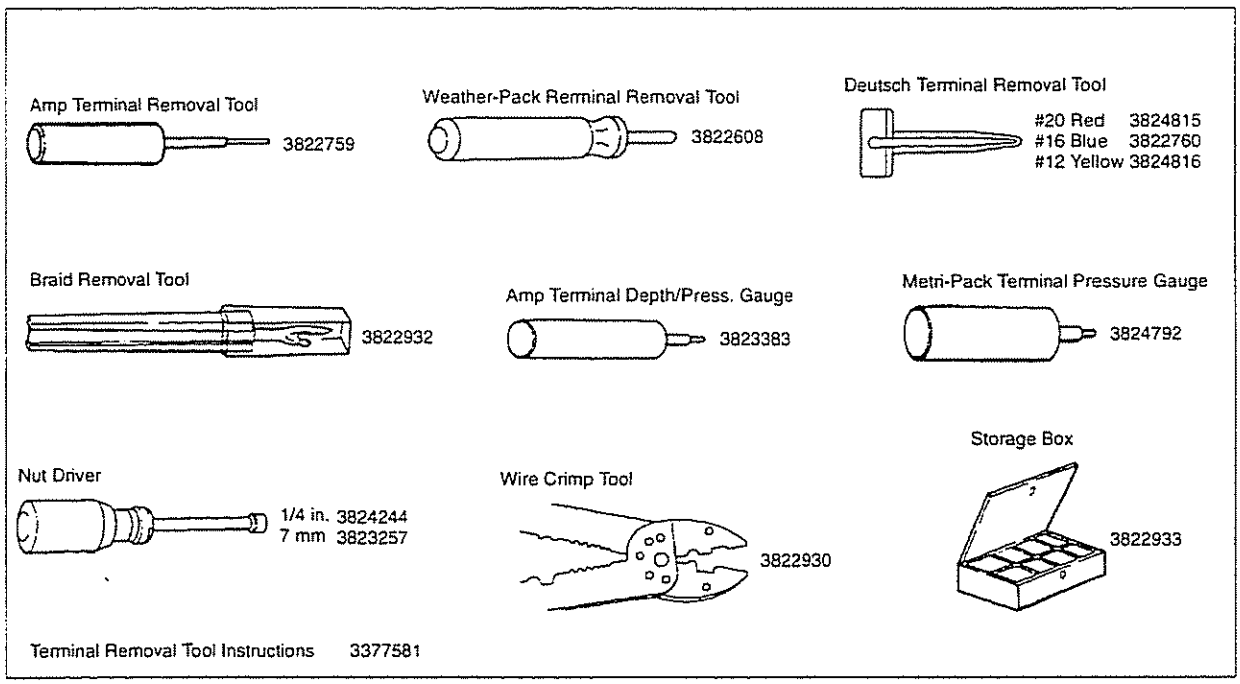

Terminal Connectors

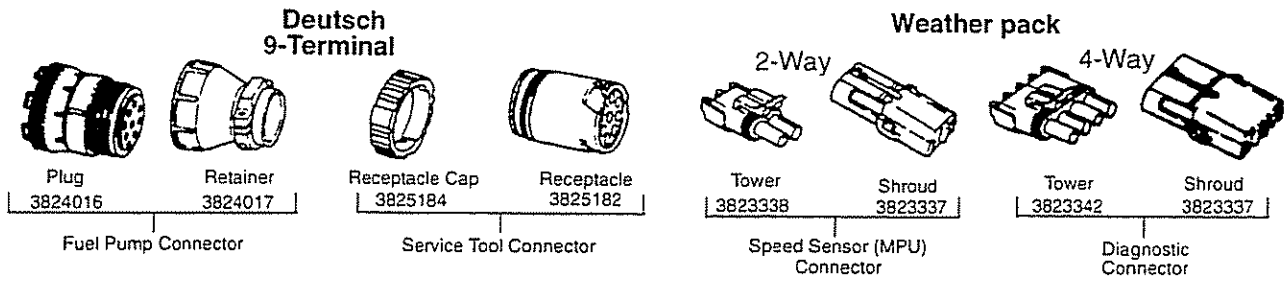

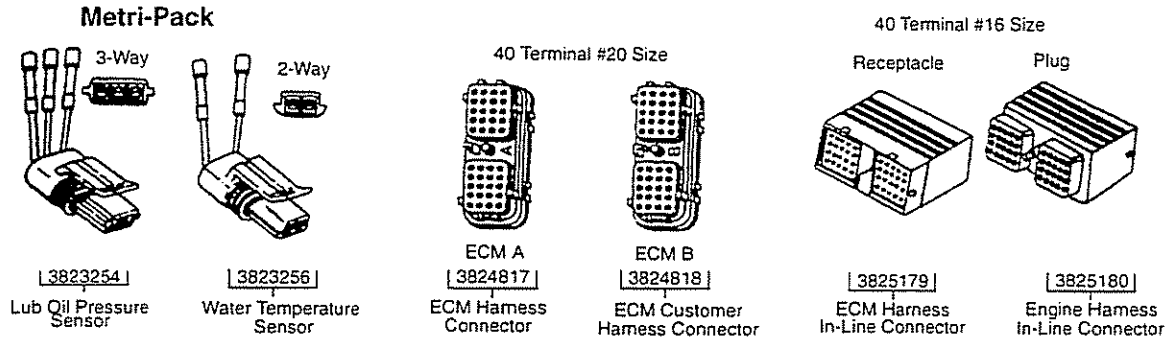

Wire Repair

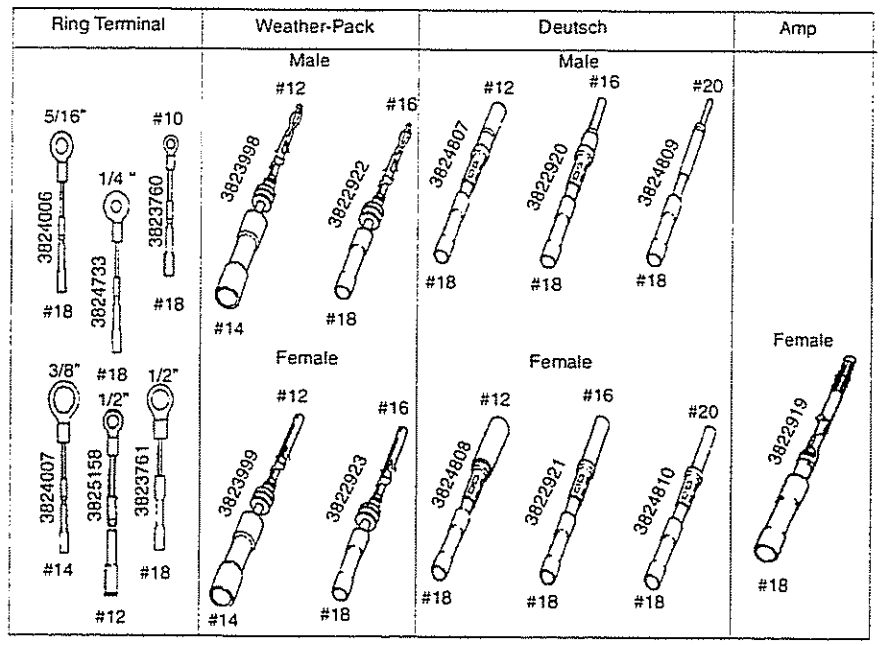

Miscellaneous Repairs

Connector Seals

Weather-Pack

4-Way



3824027

2-Way



3824025

Cavity Plugs

Weather-Pack (Green)

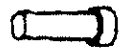

3823343

Deutsch (White)



3824002

Butt Splice (#18 - #22)



3823336

Butt Splice (#14 - #16)

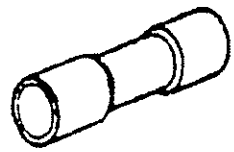

3824001

Lubricant

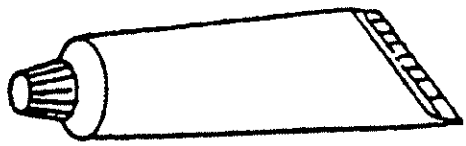

3822934

Electronic Engine Control - Torque Values

	Component or Assembly (Procedure)	Metric	U.S.
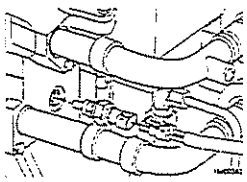	**Coolant Temperature Sensor** Coolant Temperature Sensor	14 N·m	10 ft-lb
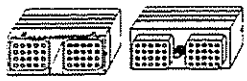	**Engine Harness Connectors** Deutsch Connector Allen Screw	3 N·m	25 in-lb
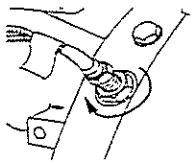	**Engine Speed Sensor (ESS)** Engine Speed Sensor Locknut	34 to 47 N·m	25 to 35 ft-lb
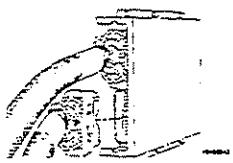	**Customer and ECM Harness Connectors** Deutsch Connector Allen Screw	3 N·m	25 in-lb
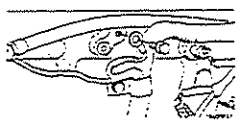	**Engine Block Ground Wire**	20 N·m	15 ft-lb
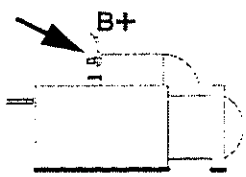	**Engine Positive (B+) Wiring Connection** Starter Positive Terminal Post	27-34 N·m	20-25 ft-lb
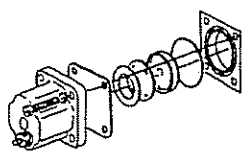	**Fuel Shutoff Valve (FSOV) Solenoid** Fuel Shutoff Valve Mounting Capscrew	8 N·m	72 in-lb

	Component or Assembly (Procedure)	Metric	U.S.
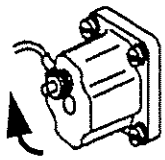	**Fuel Shutoff Valve (FSOV) Solenoid** Shutoff Valve Solenoid Coil Terminal Nut	2 N·m	15 in-lb
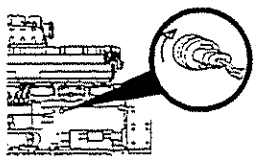	**Lubricating Oil Pressure Sensor** Lubricating Oil Pressure Sensor	14 N·m	10 ft-lb
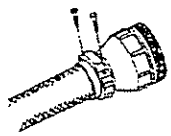	**Connector, 9-Pin** Cable Clamp Mounting Screws	0.75 N·m	6.6 in-lb

FAULT CODE TABLE

Fault Code	Reason	Effect
115	No engine speed signal detected between pins 21 and 22 of Engine Harness Connector.	Engine is shut down and cannot be run. Common Alarm output is energized.
135	High voltage detected at engine oil pressure sensor signal pin 12 of Engine Harness ECM Connector.	No effect on performance. Common Warning output is energized.
141	Low voltage detected at engine oil pressure sensor signal pin 12 of Engine Harness ECM Connector.	No effect on performance. Common Warning output is energized.
143	Engine oil pressure has dropped below the warning threshold for low oil pressure.	No effect on performance. Common Warning output is energized. Pre-low Oil Pressure relay driver is energized.
144	High voltage detected at engine coolant temperature sensor signal pin 14 of Engine Harness ECM Connector.	No effect on performance. Common Warning output is energized.
145	Low voltage detected at engine coolant temperature sensor signal pin 14 of Engine Harness ECM Connector.	No effect on performance. Common Warning output is energized.
146	Engine coolant temperature has exceeded the warning threshold for high coolant temperature.	No effect on performance. Common Warning output is energized. Pre-High Coolant Temperature relay driver is energized.
151	Engine coolant temperature has exceeded the alarm (shut down) threshold for high coolant temperature.	Engine will shut down. Common Alarm output is energized. High Coolant Temperature relay driver is energized.
171	Fuel pump rack position fault. One or both of the left bank or right bank fuel pump racks is not at the commanded position.	Performance could be sluggish or slow to respond. Common Warning output is energized.
234	Engine speed sensor signal on pins 21 and 22 of Engine Harness ECM Connector indicates engine speed greater than alarm (shut down) threshold.	Fuel shutoff valves are de-energized (valves closed). Common Alarm output is energized. Overspeed relay driver is energized.
342	The ECM has detected a memory checksum error in the memory containing critical engine parameters.	Engine will shut down. Common Alarm output is energized. (EMC data may be lost, including fault code data, adjustable parameter settings, ECM time, and engine run time.)
346	The ECM has detected a memory checksum error in the memory containing non-critical engine parameters.	None on performance. Common Warning output is energized. (ECM data may be lost, including fault code data, adjustable parameter settings, ECM time, and engine run time.)
415	Engine oil pressure has dropped below the alarm (shut down) threshold for low oil pressure.	Engine will shut down. Common Alarm output is energized. Low Oil Pressure relay driver is energized.

Troubleshooting Procedures and Techniques

⚠ WARNING ⚠

Troubleshooting presents hazards that can result in equipment damage, severe personal injury or death. Troubleshooting must be done by trained and experienced technicians.

A thorough analysis of the customer's complaint is the key to successful troubleshooting. The more information known about a complaint, the faster and easier the problem can be solved.

The Trouble Symptom Charts are organized so that a problem can be located and corrected by doing the easiest and most logical things first. Complete all steps in the sequence shown from top to bottom.

It is **not** possible to include all the solutions to problems that occur; however, these charts are designed to stimulate a thought process that will lead to the cause and correction of the problem.

Follow these basic troubleshooting steps:

- Get all the facts concerning the complaint
- Analyze the problem thoroughly
- Relate the symptoms to the basic engine systems and components
- Consider any recent maintenance or repair action that can relate to the complaint
- Double-check before beginning any disassembly
- Solve the problem by using the symptom charts and doing the easiest things first
- Determine the cause of the problem and make a thorough repair
- After repairs have been made, operate the engine to make sure the cause of the complaint has been corrected

Troubleshooting Symptoms Charts

Use the charts on the following pages to aid in diagnosing specific engine symptoms. Read each row of blocks from top to bottom. Follow through the chart to identify the corrective action.

For additional Troubleshooting Symptoms Charts pertaining to engine performance and the QST30 G-Drive Fuel System, see The QST Fuel System Troubleshooting and Repair Manual (Bulletin No. 3666184).

Symptom: Engine cranks but will not start (No Exhaust Smoke)

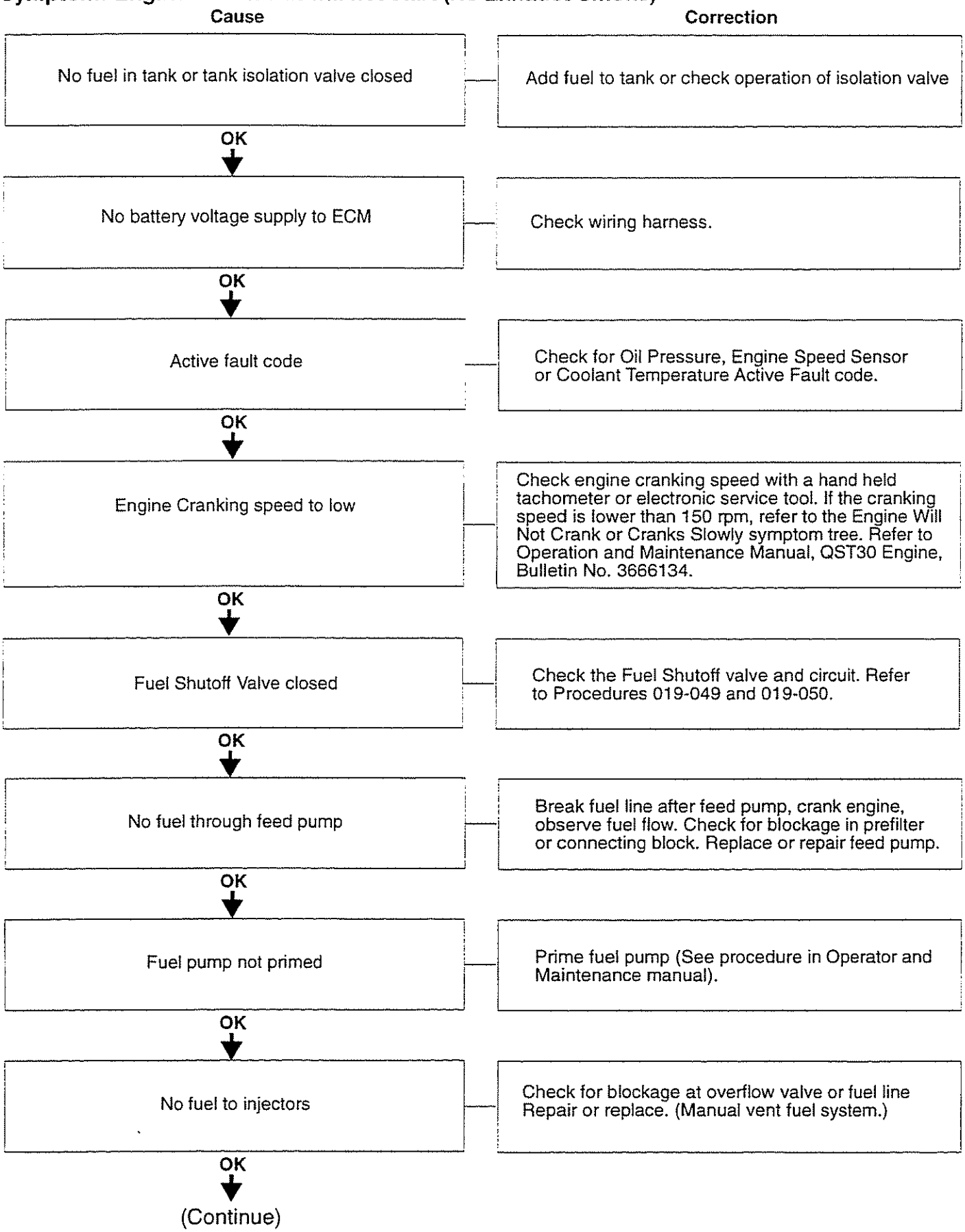

Symptom: Engine cranks but will not start (No Exhaust Smoke)(Continued).

Cause	Correction
Speed signal defective	Check Engine speed Sensor and wiring harness for defects.
OK ↓	
Air intake restriction.	Check the air intake system for restriction. Clean or replace the air filter and inlet piping as necessary. Refer to the operation and Maintenance Manual, QST30 Engine, Bulletin No. 3666134.
OK ↓	
Exhaust system restriction.	Check the exhaust system for restrictions.

Symptom: Engine cranks but will not start (Exhaust Smoke)

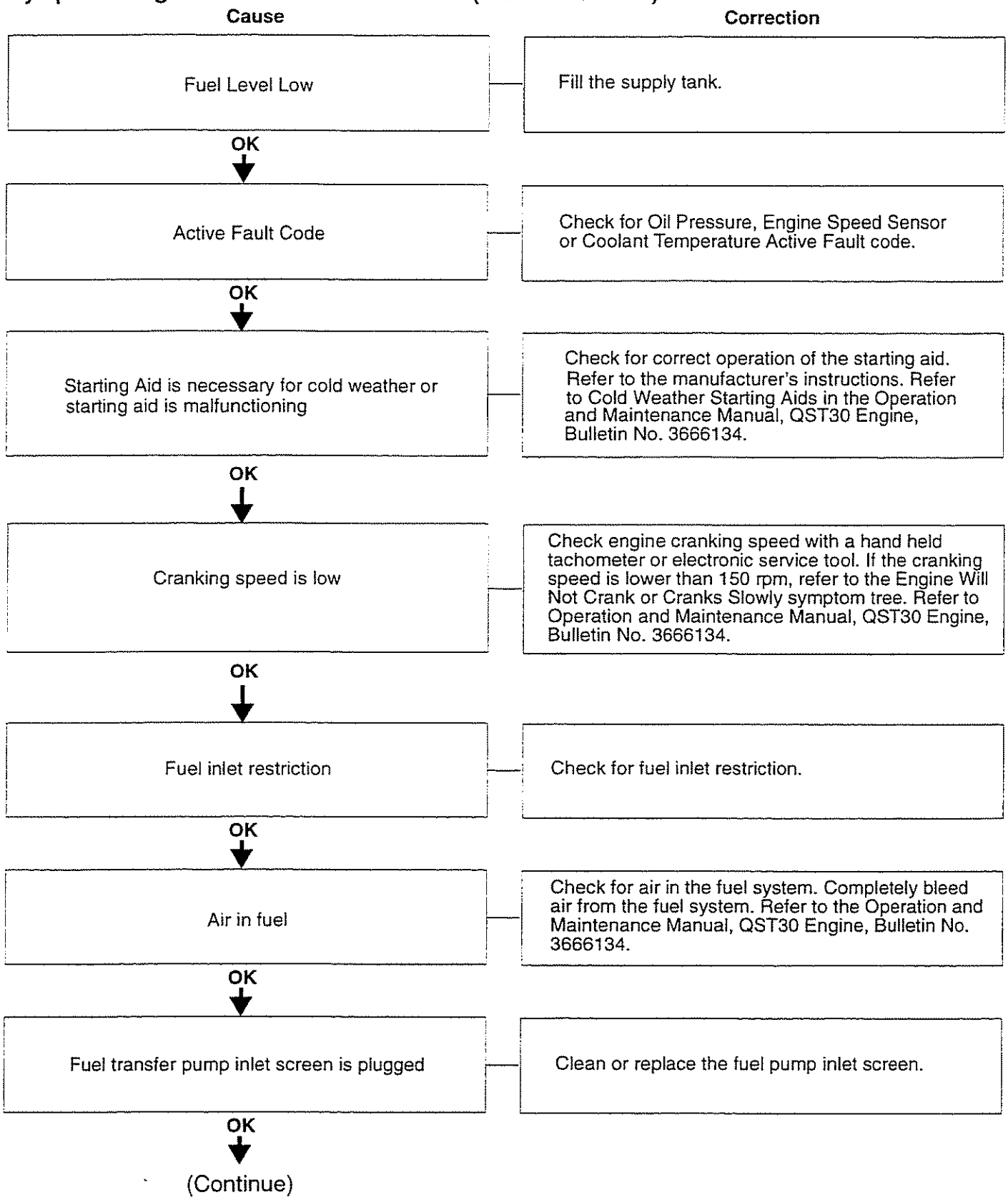

Symptom: Engine cranks but will not start (Exhaust Smoke)(Continued)

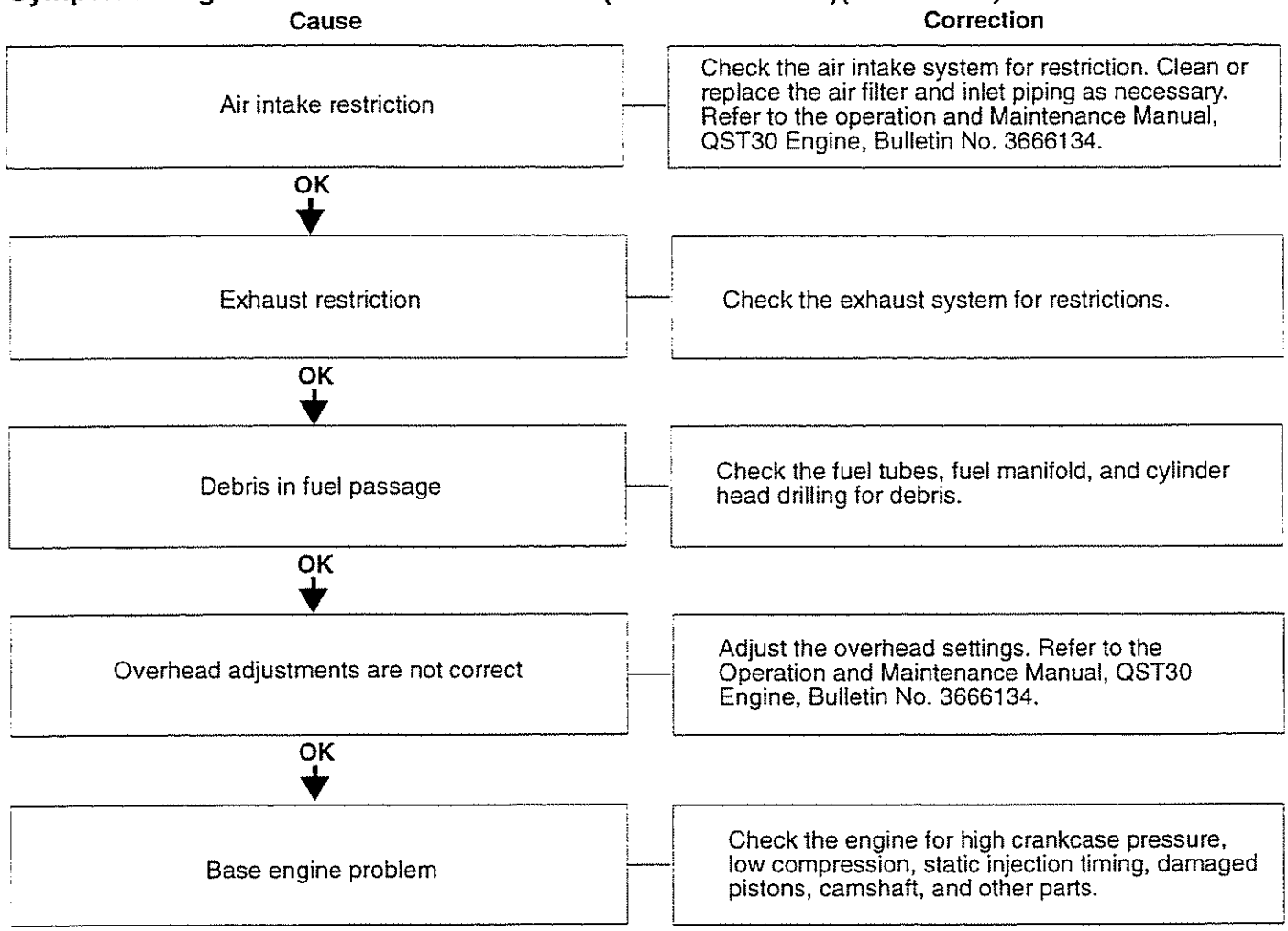

Symptom: Engine will not reach rated speed (RPM).

Cause	Correction
Tachometer is **not** calibrated or is malfunctioning	Compare the tachometer reading with a hand tachometer or an electronic service tool reading. Calibrate or replace the tachometer as necessary. Refer to the OEM service manuals.
OK ↓	
Engine speed sensor (ESS) or circuit is malfunctioning	Check the ESS for correct adjustment and for debris on the sensor. Check the ESS circuit. Refer to Procedure 019-042 and 019-106.
OK ↓	
Engine parasitics are excessive	Check engine driven units for correct operation. Check the cooling fan for correct operation and cycle time. refer to the OEM service manual.
OK ↓	
Fuel inlet restriction	Check for fuel inlet restriction.
OK ↓	
Electronic fault codes active or high counts of inactive fault codes	Refer to Section TF in the Troubleshooting and Repair manual for fault code troubleshooting.
OK ↓	
Programmable parameters or selected features are not correct.	Check the programmable parameters and the selected features with an electronic service tool. Set the parameters and features again if necessary.
OK ↓	
Fuel grade is not correct for the application or the fuel quality is poor	Operate the engine from a tank of good fuel. Refer to Fuel Recommendations and Specifications in the Operation and Maintenance Manual QST30 Engine Bulletin No. 3666134.
OK ↓	
Load is excessive for engine horsepower rating	Reduce the load on the engine. Refer to the OEM specifications.
OK ↓	

(Continue)

Symptom: Engine will not reach rated speed (RPM)(Continued)

Cause	Correction
Over head adjustments are not correct	Adjust the overhead settings. Refer to the Operation and Maintenance Manual, QST30 Engine Bulletin No. 3666134.
OK	
Fuel injection pump is malfunctioning	Remove and test the fuel injection pump. Replace the pump if necessary. Refer to the Operation and Maintenance Manual, QST30 Engine. Bulletin No. 36666134.
OK	
Base engine problem	Check the engine for high crankcase pressure, low compression, static injection timing, damaged piston, camshaft, and other parts.

Engine Will Not Remain Running:

Cause	Correction
Electronic fault codes active or high counts of inactive fault codes	Refer to Section TF in the Troubleshooting and Repair manual for fault code troubleshooting.
OK ↓	
Emergency Stop Signal tripped	Check generator operator interface for Emergency Stop signal.
OK ↓	
If engine will **not** restart	Refer to the Engine Difficulty to Start or Will Not Start symptom tree in Troubleshooting and Repair Manual
OK ↓	
Battery voltage supply to the electronic control module (ECM) has been lost	Check The Battery connections. Refer to the Operation and Maintenance Manual, QST30 Engine, Bulletin No. 3666134. Check the un-switched battery supply circuit. Refer to Procedure 019-087.
OK ↓	
Run signal to the ECM has been lost	Check the Stop/Run switch and circuit. Refer to Procedures 019-014 and 019-015.
OK ↓	
Fuel shutoff valve(s) closed (electronic controlled injection)	Check the fuel shutoff valve and circuit. Refer to Procedures 019-049 and 019050.
OK ↓	
OEM engine protection system is malfunctioning	Isolate the OEM engine protection system. Follow the OEM service manuals to check for a malfunction.
OK ↓	
Fuel inlet restriction	Check for fuel inlet restriction.
OK ↓	
(Continue)	

Engine Will Not Remain Running (Continued):

Cause	Correction
Air in the fuel system	Check for air in the fuel system. Completely bleed air from the fuel system. Refer to the Operation and Maintenance Manual, QST30 Engine, Bulletin No. 3666134.
OK ↓	
Fuel drain line restriction	Check the fuel drain lines for restriction. Clear or replace the fuel lines, check valves, or tank vents as necessary.
OK ↓	
Electronic control module (ECM) is malfunctioning	Replace the ECM. Refer to Procedure 019-031.
OK ↓	
Base engine problem	Check the engine for high crankcase pressure low compression, static injection timing, damaged piston, camshaft, and other parts.

Engine has rough performance:

Cause	Correction
Air in the fuel system	Check for air in the fuel system. Completely bleed air from the fuel system. Refer to the Operation and Maintenance Manual, QST30 Engine, Bulletin No. 3666134.
OK ↓	
Fuel inlet restriction	Check for fuel inlet restriction.
OK ↓	
Fuel drain line restriction	Check the fuel drain lines for restriction. Clear or replace the fuel lines, check valves, or tank vents as necessary.
OK ↓	
Fuel grade is **not** correct for the application or the fuel quality is poor	Operate the engine from a tank of good fuel. Refer to Fuel Recommendations and Specifications in the Operation and Maintenance Manual, QST30 Engine, Bulletin No. 3666134.
OK ↓	
Electronic fault codes active or high counts of inactive fault codes	Refer to Trouble shooting and Repair Manual section TF for fault code troubleshooting.
OK ↓	
Electronic control module (ECM) is **not** correct	Check the ECM part number and compare it to the Control Parts List, Bulletin No. 3379133. Replace the ECM if necessary. Refer to Procedure 019-031.
OK ↓	
Engine speed sensor (ESS) or circuit is malfunctioning	Check the ESS for correct adjustment and for debris on the sensor. Check the ESS circuit. Refer to Procedure 019-042 and 019-106.
OK ↓	
Overhead adjustments are **not** correct	Adjust the overhead settings. Refer to the Operation and Maintenance Manual, QST30 Engine, bulletin No. 3666134.
OK ↓	

(Continue)

Engine has rough performance (Continued):

Cause	Correction
Injector is malfunctioning	Replace the malfunctioning injector. Refer to the Operation and Maintenance Manual, QST30 Engine, Bulletin No. 3666134.
OK ↓	
Fuel pump overflow valve is malfunctioning	Check the overflow valve for correct operation.
OK ↓	
Fuel transfer pump is malfunctioning	Check the lift pump for correct operation. Check the pump output pressure. Replace the transfer pump if necessary. Refer to the Operation and Maintenance Manual, QST30 Engine, Bulletin No. 3666134.
OK ↓	
Debris in the fuel passages	Check the fuel tubes, fuel manifold, and cylinder head drilling for debris.
OK ↓	
Fuel injection pump is malfunctioning	Remove and test the fuel injection pump. Replace the pump if necessary. Refer to the Operation and Maintenance Manual, QST30 Engine, Bulletin No. 3666134.
OK ↓	
Static injection timing is not correct	Check the static injection timing when installing the fuel injection pump. Refer to the Operation and Maintenance Manual, QST30 Engine, Bulletin No. 3666134.
OK ↓	
Engine mounts are worn, damaged, or **not** correct	Visually check the engine mounts. Refer to the OEM service manual.
OK ↓	
Base engine problem	Check the engine for high crankcase pressure, low compression, static injection timing, damaged pistons, camshaft, and other parts.

Engine has Low Power:

Cause	Correction
Air in the fuel system	Check for air in the fuel system. Completely bleed air from the fuel system. Refer to the Operation and Maintenance Manual, QST30 Engine Bulletin No. 3666134.
OK ↓	
Engine parasitics are excessive	Check engine driven units for correct operation. Check the cooling fan cor correct operation and cycle time. Refer to the OEM service manual.
OK ↓	
Load is excessive for engine horsepower rating	Reduce the load on the engine. Refer to the OEM specifications.
OK ↓	
Engine is operating above recommended altitude.	Engine power decreases above recommended altitude. Refer to the Engine Data Sheet for specifications.
OK ↓	
Lubricating oil level is above specification	Check the oil level. Verify the dipstick calibration and oil pan capacity. Fill the system to the specified level. Refer to the Operation and Maintenance Manual, QST30 Engine Bulletin No. 3666134.
OK ↓	
Fuel level low in the tank	Fill the supply tank.
OK ↓	
Electronic fault codes active or high counts of inactive fault codes	Refer to Section TF for fault code troubleshooting.
OK ↓	
Programmable parameters or selected features are **not** correct	Check the programmable parameters and the selected features with an electronic service tool. Set the parameters and features again if necessary. Refer to the appropriate electronic service tool manual.
OK ↓	
(Continue)	

Engine has Low Power (Continued):

Cause	Correction
Electronic control module (ECM) is **not** correct	Check the ECM part number and compare it to the Control Parts List, Bulletin No. 3379133. Replace the ECM if necessary. Refer to Procedure 019-031.
OK ↓	
Air intake system restriction	Check the air intake system for restriction. Clean or replace the air filter and inlet piping as necessary. Refer to the Operation and Maintenance Manual, QST30 Engine, Bulletin No. 3666134.
OK ↓	
Engine speed sensor (ESS) or circuit is malfunctioning	Check the ESS for correct adjustment and for debris on the sensor. Check the ESS circuit. Refer to Procedure 019-042 and 019-106.
OK ↓	
Fuel leaks	Check the fuel lines, fuel connections, and fuel filters for leaks. Check the fuel lines to the supply tanks.
OK ↓	
Fuel inlet restriction	Check for fuel inlet restriction.
OK ↓	
Fuel drain line restriction	Check the fuel drain lines for restrictions. Clear or replace the fuel lines, check valves or rank vents as necessary.
OK ↓	
Intake manifold air temperature is above specification	Check the aftercare element for coolant restriction and refer to the Coolant Temperature is Above Specification symptom trees in the Operation and Maintenance Manual, QST30 Engine, Bulletin No. 3666134.
OK ↓	
Intake manifold air temperature is below specification	Refer to the Coolant Temperature Below Normal symptom in the Operation and Maintenance Manual, QST30 Engine, Bulletin No. 3666134.
OK ↓	
(Continue)	

Engine has Low Power (Continued):

Cause	Correction
Exhaust system restriction	Check the exhaust system for restrictions.
OK ↓	
Fuel pump overflow valve is malfunctioning	Check the overflow valve for correct operation.
OK ↓	
Fuel transfer pump is malfunctioning	Check the lift pump for correct operation. Check the pump output pressure. Replace the transfer pump if necessary. Refer to the Operation and Maintenance Manual, QST30 Engine, Bulletin No. 3666134.
OK ↓	
Fuel transfer pump inlet is plugged	Check the lift pump for correct operation. Check the pump pressure. Replace the transfer pump if necessary. Refer to the Operation and Maintenance Manual, QST30 Engine, Bulletin No. 3666134.
OK ↓	
Air intake or exhaust leaks	Visually inspect the air intake and exhaust systems for air leaks. Check for loose or damaged piping connections and missing pipe plugs. Check the turbocharger and exhaust manifold mounting.
OK ↓	
Turbocharger is **not** correct	Check the turbocharger part number and compare it to the Control Parts List (CPL), Bulletin No. 3379133. Replace the turbocharger if necessary.
OK ↓	
Fuel grade is **not** correct for the application or the fuel quality is poor.	Operate the engine from a tank of good fuel. Refer to Fuel Recommendations and Specifications. in the Operation and maintenance Manual, QST30 Engine, Bulletin No. 3666134.
OK ↓	
Fuel inlet temperature to pump is above specification	Fill the fuel tank, turn off or bypass the fuel heaters, and check the fuel cooler. Refer to the OEM service manuals.
OK ↓	

(Continue)

Engine has Low Power (Continued):

Cause	Correction
Static injection timing is **not** correct	Check the static injection timing when installing the fuel injection pump. Refer to the Operation and Maintenance manual, QST30 Engine, Bulletin No. 3666134.
OK ↓	
Debris in the fuel passages	Check the fuel tubes, fuel manifold, and cylinder head drilling for debris.
OK ↓	
Injector is malfunctioning	Replace the malfunctioning injector. Refer to the Operation and Maintenance Manual, QST30 Engine, Bulletin No. 3666134.
OK ↓	
Overhead adjustments are not correct	Adjust the overhead settings. Refer to the Operation and Maintenance Manual, QST30 Engine, Bulletin No. 3666134.
OK ↓	
Fuel injection pump is malfunctioning	Remove and test the fuel injection pump. Replace the pump if necessary. Refer to the Operation and Maintenance Manual, QST30 Engine, Bulletin No. 3666134.
OK ↓	
Base engine problem	Check the engine for high crankcase pressure, low compression, static injection timing, damaged pistons, camshaft, and other parts.

Engine Acceleration or Response Poor

Cause	Correction
Verify the complaint	Test the engine operation while under load. Perform an engine acceleration test. Perform an engine load test. Observe the commanded rack position with INSITE™.
OK ↓	
Electronic fault codes active or high counts of inactive fault codes	Refer to Section TF for Fault code troubleshooting.
OK ↓	
Programmable parameters or selected features are **not** correct	Check the programmable parameters and the selected features with an electronic service tool. Set the parameters and features again if necessary. Refer to the appropriate electronic service tool manual.
OK ↓	
Engine parasitics are excessive	Check engine driven units for correct operation. Check the cooling fan for correct operation and cycle time. Refer to the OEM service manual.
OK ↓	
Load is excessive for engine horsepower rating	Reduce the load on the engine. Refer to the OEM specifications.
OK ↓	
Engine is operating above recommended altitude	Engine performance decreases above recommended altitude. Refer to the Engine Data Sheet for specifications.
OK ↓	
Intake manifold air temperature is below specification	Refer to the Coolant Temperature Below Normal symptom tree in the Operation and Maintenance Manual, QST30 Engine, Bulletin No. 3666134.
OK ↓	
Coolant temperature sensor is malfunctioning	Check the coolant temperature sensor. Refer to Procedure 019-019.
OK ↓	

(Continue)

Symptom: Engine Acceleration or Response Poor (continued):

Cause	Correction
Fuel inlet restriction	Check for fuel inlet restriction.
OK ↓	
Fuel transfer pump is malfunctioning	Check the lift pump for correct operation. Check the pump output pressure. Replace the transfer pump if necessary. Refer to the Operation and Maintenance Manual, QST30 Engine, Bulletin No. 3666134.
OK ↓	
Air in the fuel system	Check for air in the fuel system. Completely bleed air from the fuel system. Refer to the Operation and Maintenance Manual, QST30 Engine, Bulletin No. 3666134.
OK ↓	
Fuel drain line restriction	Check the fuel drain lines for restriction. Clear or replace the fuel lines, check valves, or tank vents as necessary.
OK ↓	
Air intake or exhaust leaks	Visually inspect the air intake and exhaust system for air leaks. Check for loose or damaged piping connections and missing pipe plugs. Check the turbocharger and exhaust manifold mounting.
OK ↓	
Air intake system restriction	Check the air intake system for restriction. Clean or replace the air filter and inlet piping as necessary. Refer to the Operation and Maintenance Manual QST30 Engine, Bulletin No. 3666134.
OK ↓	
Exhaust system restriction	Check the exhaust system for restrictions.
OK ↓	
Fuel grade is **not** correct for the application or the fuel quality is poor	Operate the engine from a tank of good fuel. Refer to Fuel Recommendations and Specifications in the Operation and Maintenance Manual, QST30 Engine, Bulletin No. 3666134.
OK ↓	

(Continue)

Engine Acceleration or Response Poor (continued):

Cause	Correction
Debris in the fuel passages	Check the fuel tubes, fuel manifold, and cylinder head drilling for debris.
OK ↓	
Fuel inlet temperature to pump is above specification	Fill the fuel tank, turn off or bypass the fuel heaters, and check the fuel cooler. Refer to the OEM service manuals.
OK ↓	
Debris in the fuel passage	Check the fuel tubes, fuel manifold, and cylinder head drilling for debris.
OK ↓	
Overhead adjustments are not correct	Adjust the overhead settings. refer to the Operation and Maintenance Manual, QST30 Engine, Bulletin No. 3666134.
OK ↓	
Fuel pump overflow valve is malfunctioning	Check the overflow valve for correct operation.
OK ↓	
Fuel transfer pump inlet screen is plugged	Clean or replace the fuel pump inlet screen.
OK ↓	
Fuel injection pump is malfunctioning	Remove and test the fuel injection pump. Replace the pump if necessary. Refer to the Operation and Maintenance Manual, QST30 Engine, Bulletin No. 3666134.
OK ↓	
Base engine problem	Check the engine for high crankcase pressure, low compression, static injection timing, damaged piston, camshaft, and other parts.

Symptom: Engine will not shut off

Cause	Correction
Electronic fault codes active or high counts of inactive fault codes	Refer to section TF for fault troubleshooting.
OK ↓ Stop/Run switch circuit is malfunctioning	Check the Stop/Run switch circuit. Refer to Procedure 019-015.
OK ↓ Engine is running on fumes drawn into the air intake.	Check the air intake ducts. Locate and isolate the source of the fumes. Repair as necessary. Refer to the OEM service manuals.
OK ↓ Fuel Shutoff Valve is malfunctioning	Ground (short circuit) shutoff valve or remove FSOV Signal Wire. Refer to Procedures 019-014 and 019-015.
OK ↓ Turbocharger oil seal is leaking	Check the turbocharger oil seals for leaks.

Publications

Available service/application literature is as follows:

Publication	Bulletin Number
• QST30-G1/G2/G3 Parts Manual	3672102
• QST30 Shop Manual	3666196
• QST30 O & M Manual	3666134
• QST30 G-Drive Wiring/Fault Code Diagram	3666185
• QST30 G-Drive Fuel System T & R Manual	3666184
• INSITE™ For QST30 G-Drive User's Manual	3666196
• QST30 G-Drive Pocket Fault Code Cards	3666242
• QST30 G-Drive Engine Installation Requirements	3884904

All of the literature listed above may be purchased from Gannett Direct Mail Services (GDMS) using

TOSS Instructions for ordering from Gannett are as follows:

1. On the COMMAND line Type: REVI #FORM (press ENTER).
2. Move cursor to the COMMAND line and type: FIND GANNETT (press ENTER).
3. Move cursor to the COMMAND line and type: COPY nnn, (nnn=Gannett Order Form number) (press ENTER).
4. Now complete the form that has been copied into your draft file and hit PF4 key to send.

It's just that easy.

Service Literature Ordering Locations

Region	Ordering Location
United States and Canada	Cummins Distributors or Contact 1-800-DIESELS (1-800-343-7357)
U.K., Europe, Mid-East, Africa, and Eastern European Countries	Cummins Engine Co., Ltd. Royal Oak Way South Daventry Northants, NN11 5NU, England
South and Central America (excluding Brazil and Mexico)	Cummins Americas, Inc. 16085 N.W. 52nd. Avenue Hialeah, FL 33104
Brazil and Mexico	Cummins Engine Co., Inc. International Parts Order Dept., MC 40931 Box 3005 Columbus, IN 47201-3005
Far East (excluding Australia and New Zealand)	Cummins Diesel Sales Corp. Literature Center 8 Tanjong Penjuru Jurong Industrial Estate Singapore
Australia and New Zealand	Cummins Engine Company Pty. Ltd. Z Caribbean Drive Scoresby, Victoria 3179 Australia

Obtain current price information from your local Cummins Distributor or (for U.S.A. and Canada) by calling Cummins Toll Free Number 1-800-DIESELS (1-800-343-7357).

THIS PAGE LEFT INTENTIONALLY BLANK

Literature Order Form

Use this form for prompt handling of you literature order.

Item	Bulletin Number	Title of Publication	Quantity	U.S. Price Each	Amount
1				$	$
2					
3					
4					
5					
6					
				Order Total	

Contact your Cummins distributor for prices and availability.

For problems with literature orders (for U.S.A. and Canada), contact 1-800-DIESELS (1-800-343-7357). All other locations contact your local Distributor.

Prices subject to change without notice.

Please cut on dotted line

Literature Order Form

Use this form for prompt handling of you literature order.

Item	Bulletin Number	Title of Publication	Quantity	U.S. Price Each	Amount
1				$	$
2					
3					
4					
5					
6					
				Order Total	

Contact your Cummins distributor for prices and availability.

For problems with literature orders (for U.S.A. and Canada), contact 1-800-DIESELS (1-800-343-7357). All other locations contact your local Distributor.

Prices subject to change without notice.

Mail the Literature Order Form along with your ship-to address to your nearest Cummins distributor.

FROM:		
Name:		
Street Address:		
City:	State/Province:	Zip/Postal Code:
Country:		

SHIP TO: (Name and address where literature is to be shipped)		
Name:		
Street Address:		
City:	State/Province:	Zip/Postal Code:
Country:		

Please cut on dotted line

Mail the Literature Order Form along with your ship-to address to your nearest Cummins distributor.

FROM:		
Name:		
Street Address:		
City:	State/Province:	Zip/Postal Code:
Country:		

SHIP TO: (Name and address where literature is to be shipped)		
Name:		
Street Address:		
City:	State/Province:	Zip/Postal Code:
Country:		

Cummins Customized Parts Catalog

Cummins is pleased to announce the availability of a parts catalog compiled specifically for you. Unlike the generic versions of parts catalogs that support general high volume parts content; Cummins Customized catalogs contains only the new factory parts that were used to build your engine.

The catalog cover, as well as the content, is customized with you in mind. You can use it in your shop, at your worksite, or as a coffee table book in your RV or boat. The cover contains your name, company name, address, and telephone number. Your name and engine model identification even appears on the catalog spine. Everybody will know that Cummins created a catalog specifically for you.

This new catalog was designed to provide you with the exact information you need to order parts for your engine. This will be valuable for customers that do not have easy access to the Cummins Electronic Parts Catalog or the Cummins Parts Microfilm System.

Additional Features of the Customized Catalog include:

- Engine Configuration Data
- Table of Contents
- Separate Option and Parts Indexes
- Service Kits (when applicable)
- ReCon Part Numbers (when applicable)

ORDERING THE CUSTOMIZED PARTS CATALOG

Customers can call Gannett Marketing Services at 1-800-646-5609 and order by credit card. Ask for bulletin 3672139 the Customized Parts Catalog. North American customers can mail in the attached postage pre-paid order card.

ATTENTION: INTERNATIONAL CUSTOMERS (outside U.S.A.) insert the completed Customized Catalog order form in an envelope and mail to the address printed on the order form. Or, use the E-mail address **catalog@gdms.com** to place an order for a Customized Parts Catalog.

Contact GDMS for the current price; Freight will be an additional expense.

This information is required to provide a Customized Parts Catalog:

- Name
- Street Address
- Company Name (optional)
- Telephone no.
- Credit Card No.
- Cummins Engine Serial Number (located on the engine dataplate)

Unfortunately not all Cummins Engines can be supported by this parts catalog. Engines older than 1984 or newer than 3 months may not have the necessary parts information to compile a catalog. We will contact you if this occurs and explain why we are unable to fill your order.

Customized Parts Catalogs are produced specifically for a single customer. This means they are not returnable for a refund. If we make an error and your catalog is not useable, we will correct that error by sending you a new catalog.

NO POSTAGE
NECESSARY
IF MAILED
IN THE
UNITED STATES

BUSINESS REPLY MAIL

FIRST CLASS PERMIT NO. 15, COLUMBUS INDIANA

–POSTAGE WILL BE PAID BY ADDRESSEE–

CUMMINS ENGINE COMPANY, INC.
MAIL CODE 40905
BOX 3005
COLUMBUS, IN 47202-3005

Customized Parts Catalog Order Form

Customer Name _____

Street _____

City _____ State _____ Zip _____

Company Name (Optional) _____

Telephone _____

Credit Card Number _____ Expires _____

Signature _____

Engine Serial Number _____

NO POSTAGE
NECESSARY
IF MAILED
IN THE
UNITED STATES

BUSINESS REPLY MAIL

FIRST CLASS PERMIT NO. 15, COLUMBUS INDIANA

-POSTAGE WILL BE PAID BY ADDRESSEE-

CUMMINS ENGINE COMPANY, INC.
MAIL CODE 41302
BOX 3005
COLUMBUS, IN 47202-3005

Do not use this form to order additional literature. Refer to Service Literature for literature information.

Literature Survey Form

Bulletin No.: 3656323-01

We are always open to any suggestions or recommendations that will aid in improving our manuals. Use this postage paid survey form to evaluate this manual. Please check the appropriate response and use the space provided below to list any additional comments:

	Yes	No
Is the needed information easy to locate in the manual?	____	____
Is the information easy to read?	____	____
Is the information easy to understand?	____	____
Does the information sufficiently cover the subject?	____	____
Are subjects in the Index specific enough to locate in the manual?	____	____
Are the important points sufficiently emphasized?	____	____
Are the illustrations easy to understand?	____	____
Does the text support the operation being illustrated?	____	____
Do you use the Table of Contents and Section Contents?	____	____
Do you use the Index?	____	____

Please provide comments on any response(s) marked "No" in this survey and on any suggestions you feel could improve our manuals.

_____
_____
_____
_____
_____
_____

Name: _____
Company: _____
Street Address: _____
City: _____ State/Province: _____
Country: _____ Zip/Postal Code: _____

Do not use this form to order additional literature. Refer to Service Literature for literature information.

POWER WITH

INTELLIGENCE.

QSX15, QSK45, QSK60

GENERATOR DRIVE CONTROL SYSTEM

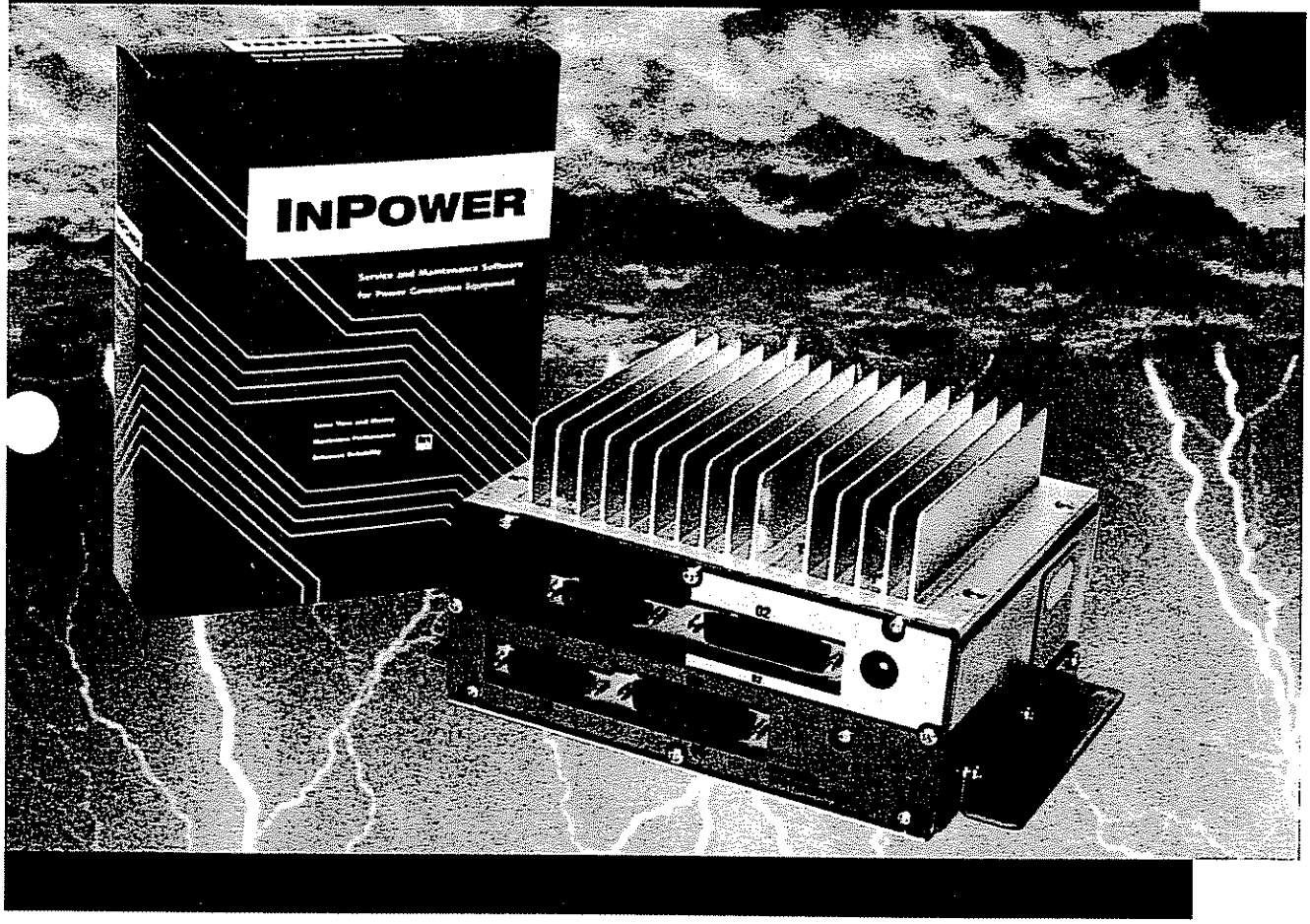

Table of Contents

About the Manual 6

Illustrations 7

Acronyms and Abbreviations 8

Electronic Control Module 9
- **Electronic Interfaces** 10
- **Hardwired Interconnections** 11
- **Dimensions** 13
- **Installation** 14
- **Power Source** 18
- **Positive / Isolated Grounding** 18

Wiring Harnesses and Interface Connectors 19
- **Engine ECM Connectors** 20
  - Connector 02 20
  - Connector 05 21
- **Customer ECM Connectors** 21
  - Connector 03 21
  - Connector 06 21
- **Extension Harness** 22
- **Engine Harness** 22
- **Inline Connectors** 23
  - Inline Connectors A, B and C 23
  - Inline Connector D 23
  - Inline Connector E 24
  - Battery Charging Alternator Flashout (1-Pin Weather-Pack) 25
  - Inline Connector Mate-With Information 26
- **QSX15 Engine Harness** 27
- **QSX15 Extension Harness** 29
- **QSX15 Alternator and Starter Harness** 30
- **QSX15 Alternator and Starter Wiring Schematic** 31
- **QSK45 / QSK60 Engine Harness** 32
- **QSK45 / QSK60 Extension Harness** 35
- **QSK45 / QSK60 Starter Harness, Right Bank** 36
- **QSK45 / QSK60 Starter Harness, Left Bank** 37
- **QSK45 / QSK60 Delco Alternator to Starter Harness, Left & Right Bank** 38
- **QSK45 / QSK60 Starter and Delco Alternator Wiring Schematic** 39
- **QSK45 / QSK60 Prestolite Alternator to Starter Harness, Left & Right Bank** 40
- **QSK45 / QSK60 Starter and Prestolite Alternator Wiring Schematic** 41

Magnetic Pickup Adjustment 42

Run/Stop Controls 44
- Run/Stop 44
- Local Emergency Stop 44
- Remote Emergency Stop 45

Starter Control 46
Crank 47
Cycle/Continuous Cranking 47
Continuous Cranking 47
Cycle Cranking 47
Starting-to-Rated Speed Ramp 48
Backup Start Disconnect 48
Backup Starting Systems 48

Idle/Rated Speed 49
Idle Speed Adjust 50
Idle-to-Rated Speed Ramp 50
Rated-to-Idle Speed Ramp 50

Perfomance, Frequency and Droop Controls 51
Governor Gain Adjust 51
Droop Adjust 53
Isochronous Mode 55
Frequency Adjust 56
Alternate Frequency 58

Load Sharing / Autosynchronization 59
±2.5V Speed Bias 59
±0.2V Speed Bias 59
Speed Bias Input Type 60
Engine-Generator Sets in Parallel 61
Barber Colman DYNA II Analog ILS Generator Sets 62
Barber Colman DYNA II Digital ILS Generator Sets 67
Woodward Analog SPM-A and AGLC Generator Sets 71
Woodward Digital DSLC Generator Sets 75

Engine Protection 80
Shutdown Override 81
Alarm Lamp/Relay Drivers 83
Engine Shutdown Alarms 83
Common Shutdown Alarm 83
Engine Warning Alarms 83
Common Warning Alarm 83

Fault Diagnostics 84
Diagnostic LEDs 84
Overspeed (OS) 84
Low Oil Pressure (LOP) 84
High Engine Temperature (HET) 84
Common Shutdown 84
Common Warning 84
Service Tool Interface 85
Fault Codes 85
Diagnostic Mode 85
Fault Flash Out 87
Fault Acknowledge 88
Snapshot Data 89

90

System Check-Out / Test 90
Built-In Test 91
Lamp/Relay Driver Start-Up Test 91
Outputs Test 91
Fuel Shut-Off Test 91
Starter Test 92
Additional Test Capabilities 92
Meter Drivers 93
Lamp/Relay Drivers 94
Engine Protection Verification 95

Miscellaneous Outputs / Capabilities 95
Reset Fuel Consumption 95
Power Limiter 96

Engine Monitoring 96
Analog Meter Drivers 97
Modbus Communications Datalink 97
Engine Sensor Parameters 97
Switch Input States 97
Adjustable Input Settings 97
Speed Bias Inputs 97
Lamp/Relay Driver States 98
Actuator Driver States 98
Fault/Diagnostic Data 98
Other GCS/ECM Data 99

First Time Engine Start 99
Engine Check 99
Control System Functional Test 100
Engine Starting 101

Miscellaneous Application Requirements and Information 101
Customer Supplied Redundant Fuel Shut-Off Devices 101
Customer Supplied Coolant Level Switch 102

Appendixes
Appendix A: Modbus Register Data 106
Appendix B: Modbus Register Data - QSX15 Only 106
Appendix C: Modbus Register Data - QSK45 and QSK60 Only 107
Appendix D: Modbus Bit Data 108
Appendix E: Supported Modbus Exception Codes 109
Appendix F: Supported Modbus Diagnostics 110
Appendix G: Electronic Device Usage 112
Appendix H: Keyed Connector Backshell Assembly Instructions 116
Appendix I: Component Manufacturers' Addresses 118
Appendix J: Operating, Electrical & Environmental Specifications 121
Appendix K: Electrical Symbols 123

Glossary of Power Terms 129

Service Literature Ordering Locations 130

Literature Order Form 131

Features List by Functional Grouping

Control Features
Switch Inputs
Run/Stop....44
Crank....47
Idle/Rated Speed....49
Alternate Frequency....58
Fault Acknowledge....88
Diagnostic Mode....85
Adjustable Inputs
Governor Gain Adjust....51
Droop Adjust....53
Frequency Adjust....56
Load Sharing/Autosynchronization Speed Bias Inputs
±2.5V Speed Bias....59
±0.2V Speed Bias....59
Speed Bias Input Type....60
Engine-Generator Sets in Parallel....61
Miscellaneous Outputs
Starter Control....46
Battery Charging Alternator Flashout (1-Pin Weather-Pack)....25
Configurable Features
Cycle/Continuous Cranking....47
Continuous Cranking....47
Cycle Cranking....47
Starting-to-Rated Speed Ramp....48
Idle Speed Adjust....50
Idle-to-Rated Speed Ramp....50
Rated-to-Idle Speed Ramp....50
Reset Fuel Consumption....95
Power Limiter....95

Fault Diagnostics and Troubleshooting....84
Diagnostic LEDs....84
Overspeed (OS)....84
Low Oil Pressure (LOP)....84
High Engine Temperature (HET)....84
Common Shutdown....84
Common Warning....84
Service Tool Interface....85
Fault Codes....85
Fault Flash Out....87
Snapshot Data....89

Engine Protection....80
Alarm Lamp/Relay Drivers....83
Engine Shutdown Alarms....83
Common Shutdown Alarm....83
Engine Warning Alarms....83
Common Warning Alarm....83
Emergency Shutdown/Start Inhibit
Local Emergency Stop....44
Remote Emergency Stop....45
Backup Start Disconnect....48
Shutdown Override....81

96
Engine Monitoring 96
Analog Meter Drivers 97
Modbus Communications Datalink 97
Engine Sensor Parameters 97
Switch Input States 97
Adjustable Input Settings 97
Speed Bias Inputs 97
Lamp/Relay Driver States 98
Actuator Driver States 98
Fault/Diagnostic Data 98
Other GCS/ECM Data 98

90
System Check-Out/Test 90
Built-In Test 91
Lamp/Relay Driver Start-up Test 91
Outputs Test 91
Fuel Shut-Off Test 91
Starter Test 92
Additional Test Capabilities 92
Meter Drivers 93
Lamp/Relay Drivers 94
Engine Protection Verification 14

Electronic Control Module Mounting 19

Wiring Harnesses and Interface Connectors 20
Engine ECM Connectors 20
Connector 02 21
Connector 05 21
Customer ECM Connectors 21
Connector 03 21
Connector 06 22
Extension Harness 22
Engine Harness 23
Inline Connectors 23
Inline Connectors A, B and C 23
Inline Connector D 24
Inline Connector E 26
Inline Connector Mate-With Information 118

Operating, Electrical and Environmental Specifications 118
Operation 118
Power 118
Environmental 119
Physical 119
Protection 119
Standards Compliance 119
Electrical Interface Characteristics 119

About the Manual

This manual contains information needed to understand, correctly operate and maintain your Generator Drive Control System as recommended by Cummins Engine Company, Inc. Additional service literature (Operation and Maintenance, Shop Manual, Troubleshooting and Repair Manual, etc.) can be ordered by filling out and mailing the Literature Order Form located in the back of this manual.

This manual does **not** cover base engine maintenance procedures. Refer to the Operation and Maintenance Manual, Bulletin for the specific engine model for information.

This manual does **not** cover generator equipment maintenance or repair procedures. Consult the generator equipment manufacturer for specific maintenance and repair recommendations.

Both metric and U.S. customary values are listed in this manual. The metric value is listed first, followed by the U.S. customary in brackets.

This document, and the information contained herein, is PROPRIETARY and shall not be disclosed, whole or in part, to others in hard copy or electronic form, reproduced by any means, or used for any purpose other than a purpose explicitly stated herein without written consent of Cummins, Inc.

Illustrations

Some of the illustrations throughout this manual are generic and will **not** look exactly like the engine or parts used in your application. The illustrations can contain symbols to indicate an action required and an acceptable or **not** acceptable condition.

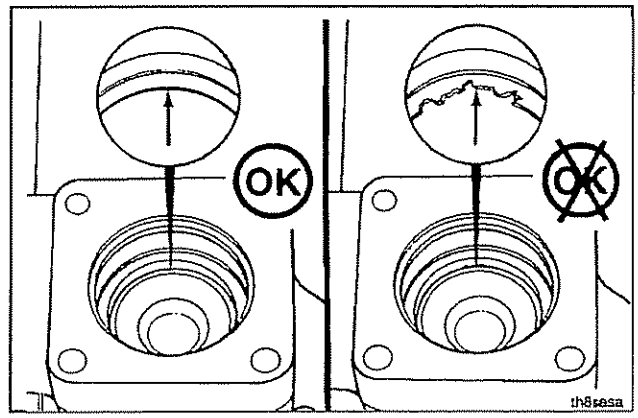

The illustrations included in this manual are intended to illustrate procedures performed or location of particular items.

The procedure performed or location of the item described will be the same even though the illustrations may vary.

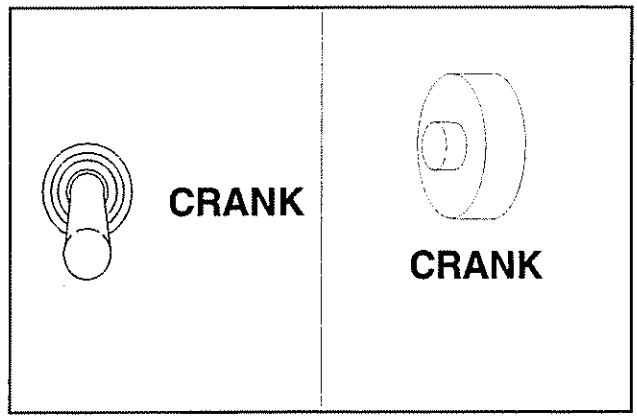

Illustrations showing connector contact positions for connections to the Electronic Control Module (ECM) are shown as viewed looking at the connector on the ECM, not the interfacing connector of the wiring harness.

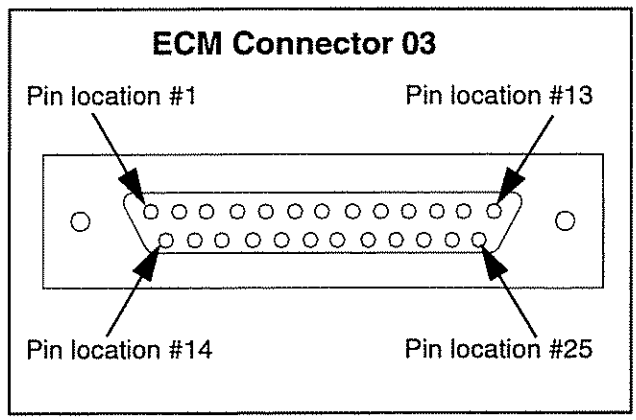

Illustrations showing connector contact positions for connections to the inline connectors of the wiring harnesses are viewed looking at the corresponding connector on the factory supplied engine or extension wiring harness, not the connector of the interfacing harness.

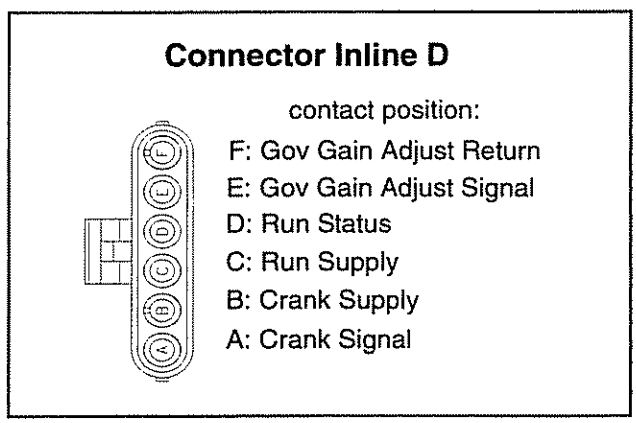

Acronyms and Abbreviations

A	Ampere
AC	Alternating Current
ABO	Area Business Organization
AEB	Application Engineering Bulletin
AMPS	Amperes
AWG	American Wire Gage
BIT	Built-In Test
B+	Battery Positive
°C	Degree Celsius
cSt	Centistokes
COM	Communication
CTS	Cooling Temperature Sensor
CW	Clockwise
CCW	Counterclockwise
DC	Direct Current
DSR	Data Set Ready
DTR	Data Terminal Ready
ECM	Electronic Control Module
EMC	Electro-Magnetic Compatibility
EMF	Electro-Motive Force
EMI	Electro-Magnetic Interference
EPA	Environment Protection Agency
EPROM	Erasable Programmable Read Only Memory
EPS	Engine Position Sensor
E-STOP	Emergency Stop
ESS	Engine Speed Sensor
°F	Degree Fahrenheit
FSOV	Fuel Shutoff Valve
ft (FT)	Foot
GCS	Generator-Drive Control System
GND	Ground
GOEM	G-Drive Original Equipment Manufacturer
H_2O	Water
HCT	High Coolant Temperature
Hg	Mercury
hp	Horsepower
HPI-PT	High Pressure Injection-Pressure/Time. Time is held constant while pressure is adjustable.
HPI-TP	High Pressure Injection-Time/Pressure. Pressure is held constant while time is adjustable.
Hz	Hertz
IEC	International Electrotechnical Commission
IP53	Ingress Protection - Dust-Protected & Spraying Water
IP54	Ingress Protection - Dust-Protected & Splashing Water
In	Inch
kg	Kilogram
kPa	Kilopascal
kW	Kilowatt
lb	Pound
LED	Light-Emitting Diode
LOP	Low Oil Pressure
mA	Milli-Ampere
mW	Milli-Watts
mm	Millimeter
N·m	Newton-meter
NEC	National Electric Code
NEMA	National Electric Manufacturers Association
O/M	Owner-Operator Manual
OEM	Original Equipment Manufacturer
OPS	Oil Pressure Sensor
OSS	Over Speed Sensor
PC	Personal Computer
p-p	Peak to Peak
P/N	Part Number
psi	Pounds Per Square Inch
PT	Potential Transformer
rpm(RPM)	Revolutions Per Minute
RTU	Remote Terminal Unit
RXD	Receive Data
PWM	Pulse Width Modulator
SCA	Supplemental Coolant Additive
TDC	Top Dead Center
TXD	Transmit Data
URL	Uniform Resource Locator
V	Volts
VAC	Volts-Alternating Current
VDC	Volts-Direct Current
WWW	World-Wide-Web

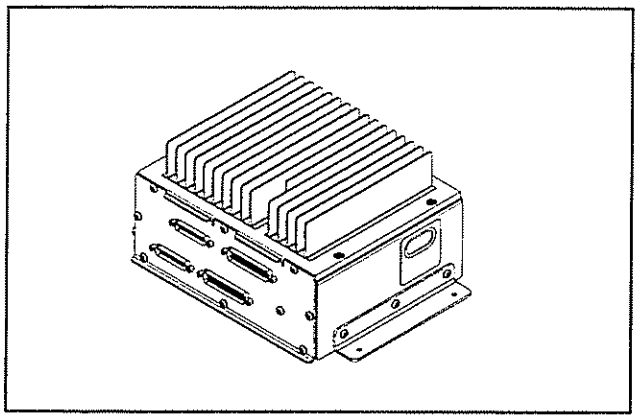

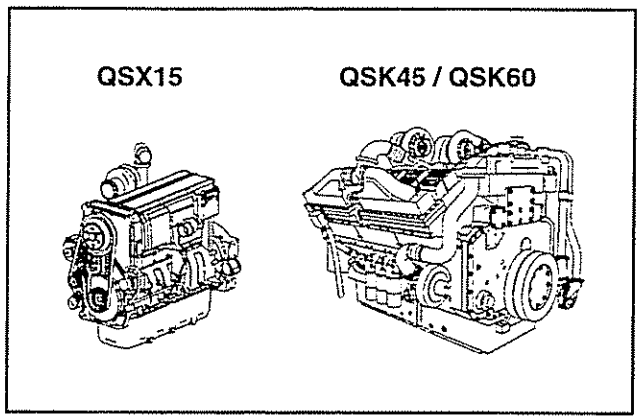

InPower™ Configurable Feature

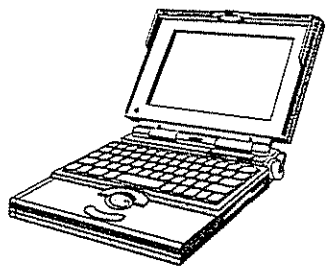

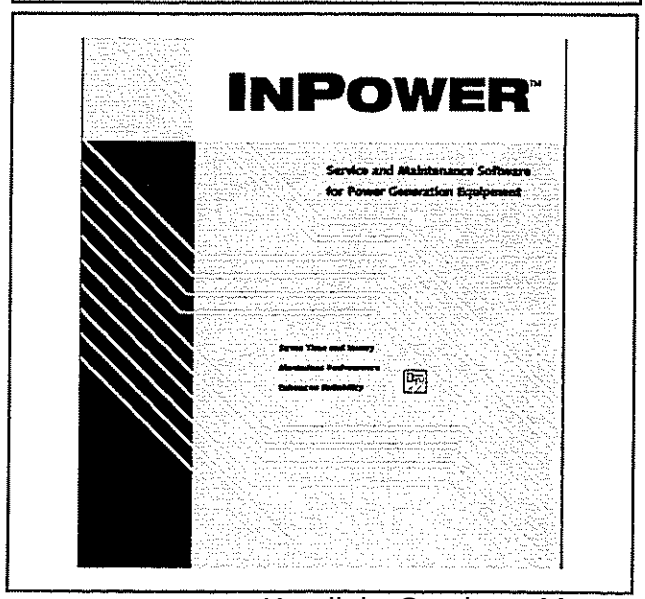

Electronic Control Module

The Electronic Control Module (ECM) is the "brain" of the Generator-Drive Control System (GCS). The ECM is a state-of-the-art electronic digital control device. The primary function of the ECM is to govern the engine speed. The ECM hardware and software provides the following additional features:

- Operator Controls Interface
- Engine Monitoring using:
  - MODBUS Serial Communications Datalink
  - Meter Drivers
  - InPower™ Electronic Service Tool
- Engine Protection
- System Fault Diagnostics
- System Check-Out / Test

> ***NOTE:*** *Because the QSX15 uses the HPI-**TP** fuel system, and the QSK45 and QSK60 use the HPI-**PT** fuel system, there are two different ECM's. The user interfaces are the same for both types of ECM's, therefore, the differences are transparent to the operator. There are some engine wiring differences though. Throughout this manual, it can be assumed that no notation means the information applies to all engine models. If information is specific to one model, that text and/or graphic will be identified as referring to the applicable model(s).*

There are many features of the GCS that are configured using the InPower™ electronic service tool (Cummins Part No. 3886301). InPower™ is a packaged software application that installs on a compatible PC. The configurable features will be discussed in this manual, however, all functions of InPower™ are not covered. Refer to the InPower™ for Generator-Drive Control System Manual (Cummins Bulletin No. 3397100) for more detailed information about using InPower™. Note that the PC that has the InPower™ software installed requires a separate service cable (Cummins Part No. 3163156) to communicate with the ECM through the RS-232 service datalink connector on the Engine Harness.

> ***NOTE:*** *All configurable features are disabled by default (the factory setting is "Disabled"). The customer must enable the features(s), using InPower™, in order to make the feature(s) operational. The steps required to enable specific configurable features are described in the respective sections of this manual.*

ECM Electronic Interfaces

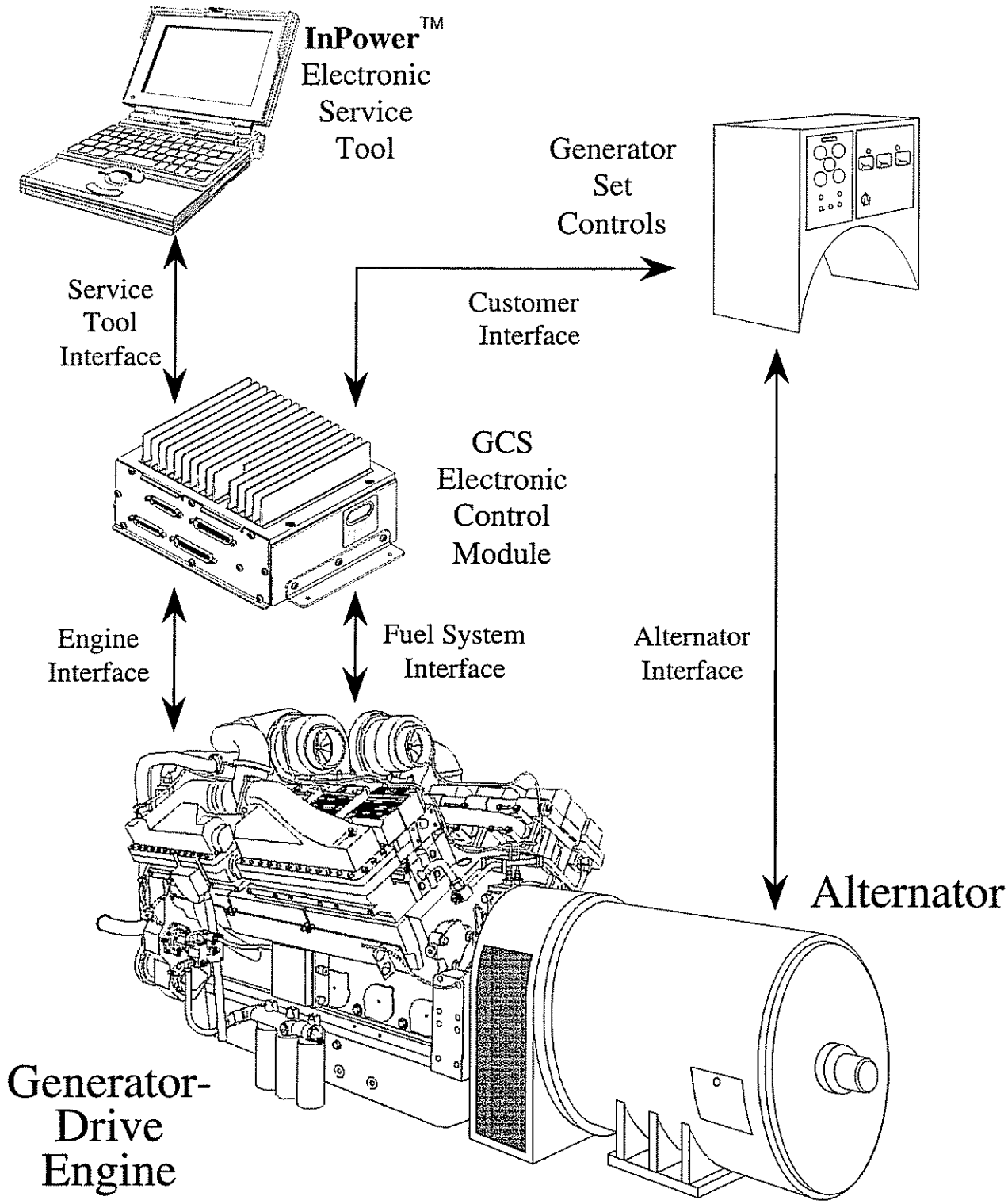

ECM Hardwired Interconnections

The illustration on page 12 shows the features implemented via hardwired interconnections to the ECM, including the on-module Diagnostic LED's and the ECM mounting brackets.

This manual references the applicable ECM connectors and pins where each feature requiring a hardwired interface to the ECM is implemented. Refer to pages 27 through 41 for figures and schematics showing the external component wiring for each engine.

There are pins on the ECM connectors that provide an electrical ground (GND) for all hardwired interfaces requiring a ground reference or signal return path.

⚠ CAUTION ⚠

The use of the ECM ground (GND) pins is required when implementing the hardwired interfaces. The ground reference or signal path for these interfaces must not be connected directly to the battery posts or other grounding points, such as the engine block. Using the ECM GND pins is necessary to reduce the adverse effect of electrical noise on the proper operation of the electronic features.

The ***Electrical Interface Characteristics*** for the hardwired interfaces are specified in Appendix J. All customer connections to the ECM must comply with these interface specifications in order to ensure proper operation of the hardwired features.

ECM Hardwired Interconnections

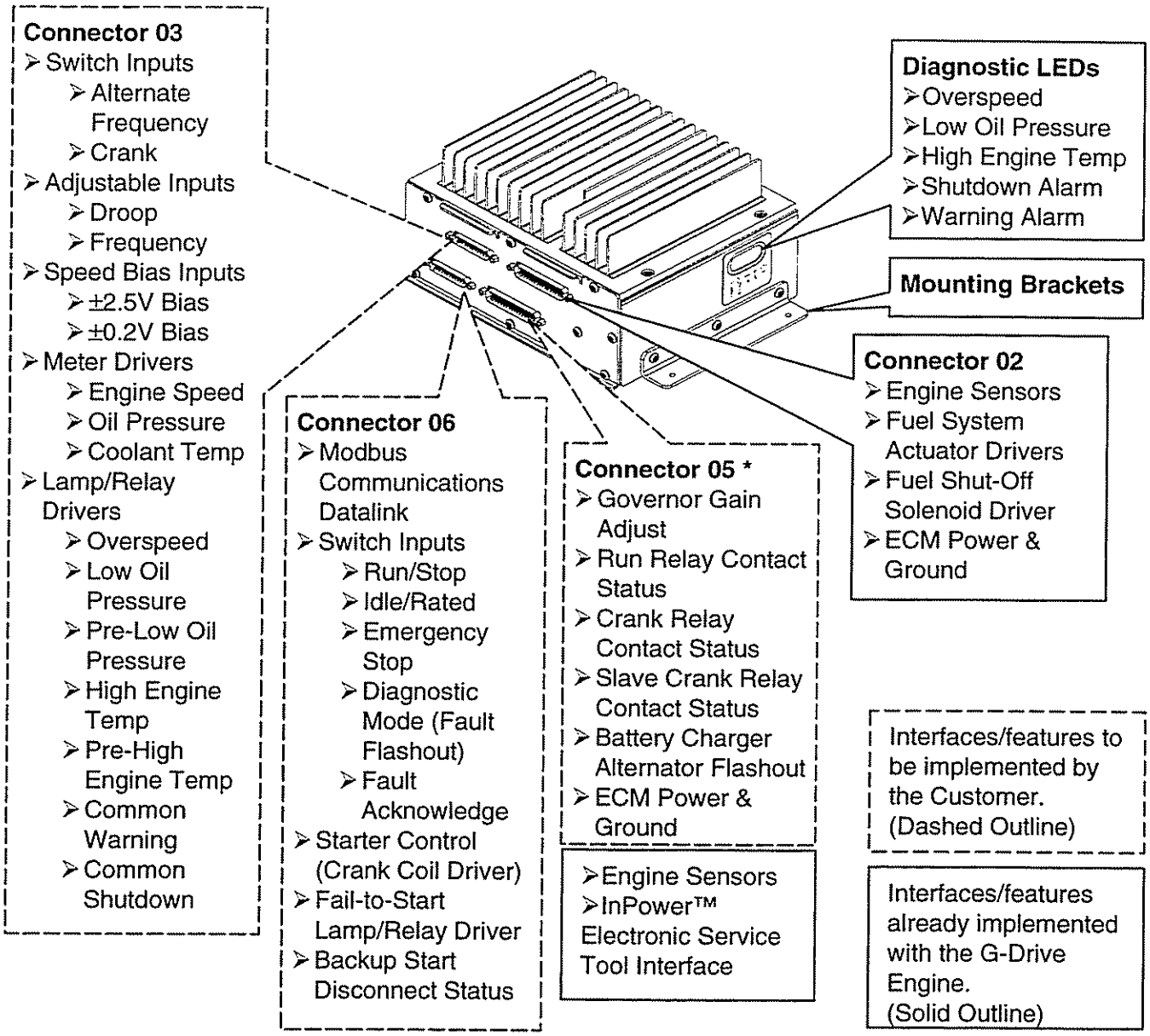

* The features of ECM Connector 05 are accessible to the customer by making the appropriate connections to Inline Connector D of the Extension Harness, Inline Connector E, and 1-Pin Weather-Pack Connector of the Engine Harness.

ECM Dimensions

The ECM measures 228.0 x 182.5 x 129.7mm [8.98 x 7.19 x 5.11 in.], including the heat-sink. Refer to the section "Installation" on page 14 for details and cautions before selecting a location for mounting the ECM.

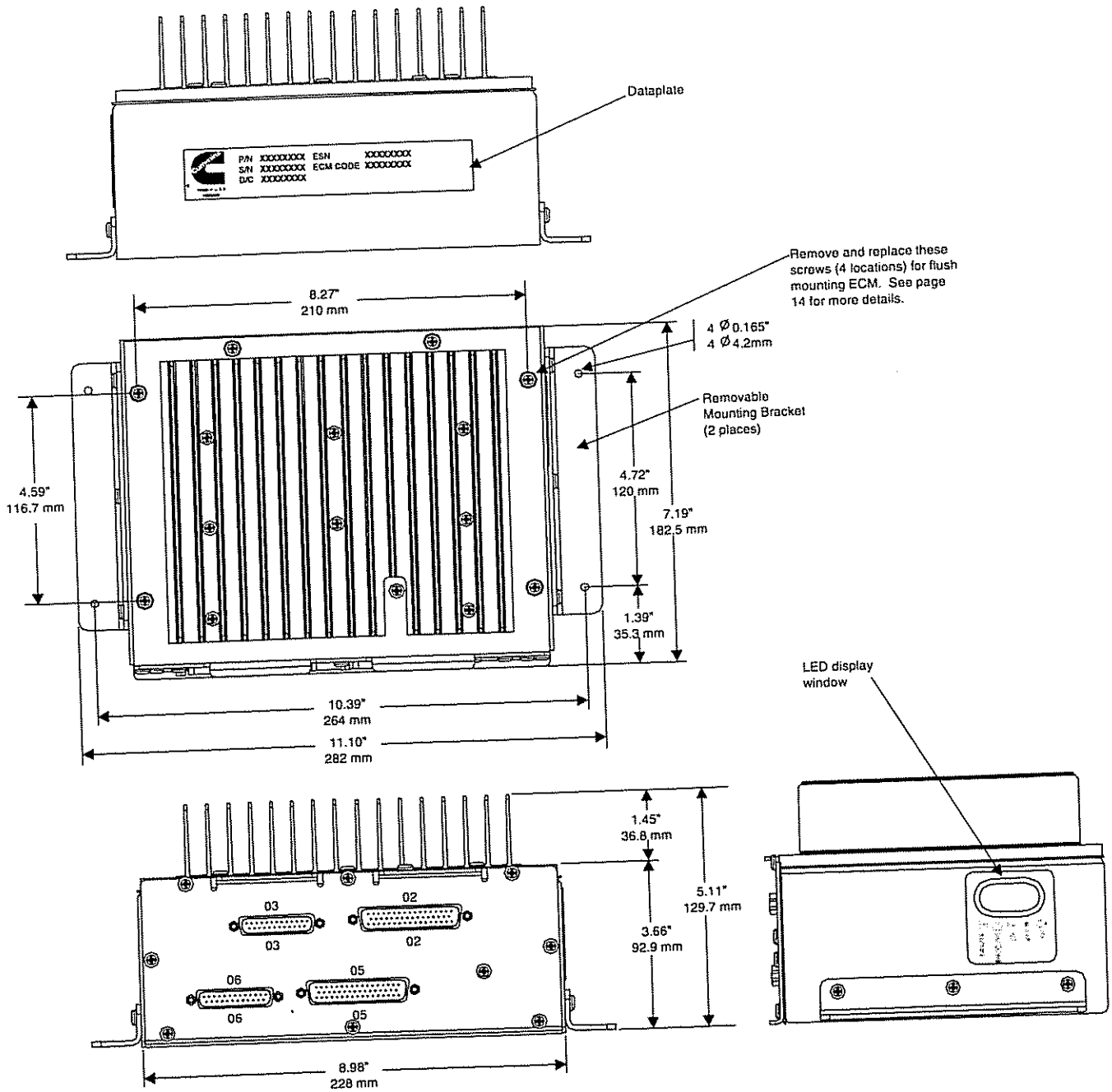

Installation

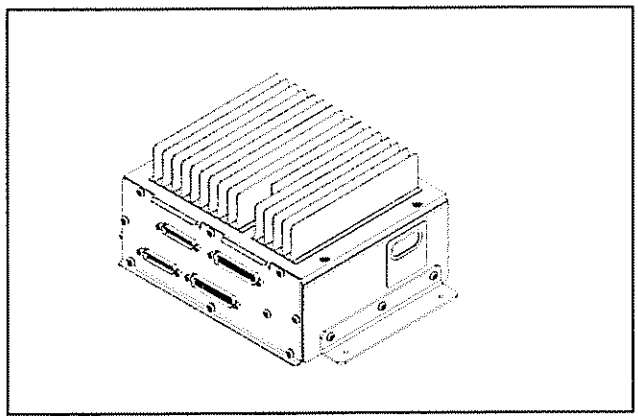

> **⚠ WARNING ⚠**
>
> *To avoid personal injury, or death, it is important that all electrical equipment be properly bonded or grounded. All metallic parts that could become energized under abnormal conditions must also be properly bonded or grounded.*

The chassis of the ECM must be properly bonded to provide protection against EMI and to conduct any fault current that may be imposed on the ECM. Typical requirements for bonding and grounding are given in the National Electrical Code. All connections, wire sizes, etc., must conform to the requirements of the electrical codes in effect at the installation site.

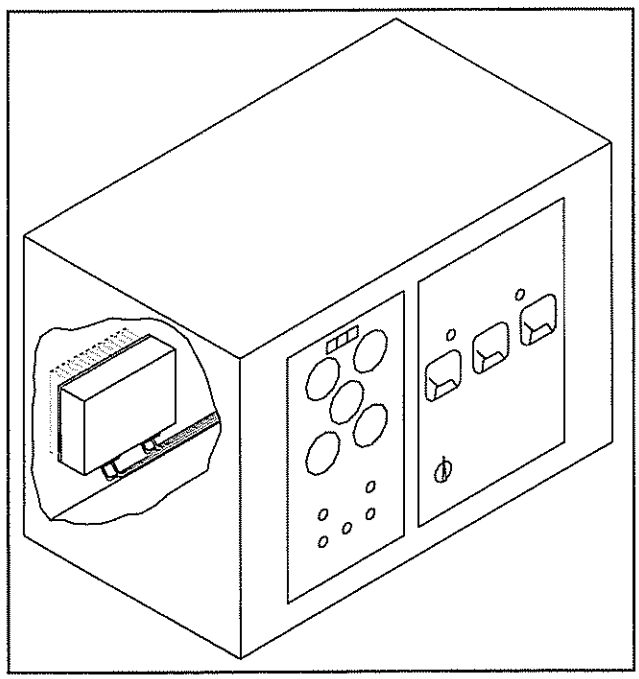

Where to Mount the ECM

The ECM is supplied by the factory, with each engine, as a kitted part and needs to be installed by the customer.

> **⚠ CAUTION ⚠**
>
> *The ECM must **NOT** be mounted directly to the engine. It is the customer's responsibility to provide proper mounting and ensure that the mounting method complies with all published environmental and application requirements. See Appendix J listing applicable operating and environmental specifications.*

The ECM includes brackets, already attached to the ECM, for installing the ECM with the backside flush to a mounting surface. See the figure on page 16 for details of the bracket mounting hole locations and dimensions.

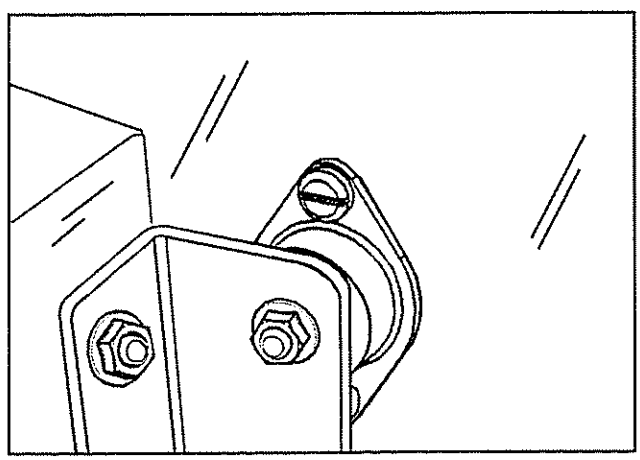

When the ECM mounting brackets are used to mount, the ECM to a panel or some other structure, the ECM must be adequately isolated to prevent damage due to vibration. If vibration isolators must be used to ensure compliance with the ECM vibration requirements, be sure to follow all manufacturer guidelines when selecting vibration isolators for use with the ECM installation.

> ***NOTE:** When vibration isolators are used, be sure that specified radial and axial load limits of the isolators are not exceeded. Be sure to provide adequate strain relief by installing clamps and allowing a sufficient bend radius on wiring harnesses.*

⚠ CAUTION ⚠

Close attention must be paid to the difference in the ambient cooling air requirements for the ECM and the heat-sink to prevent damage to the ECM. More importantly, pay attention to the maximum expected surface temperature of the heat-sink to avoid personal injury. See ***Appendix J*** *listing applicable operating and environmental specifications.*

It is important that the location of the ECM allows adequate airflow to provide proper cooling to the ECM electronics. In some instances it may be necessary to have the cooling vanes of the ECM heat sink protrude through an opening in the control panel, exposing it to ambient air. When using this means to install the ECM, an opening must be cut in the mounting surface and attachment holes drilled per the template on the following page. Four (4) mounting screws must be removed, two (2) from either side of the heat-sink base, and replaced with screws of the same thread and size but longer by the thickness of the mounting surface. The replacement screws must have the appropriate head to accommodate the holes drilled in the mounting surface (i.e. countersunk or flat).

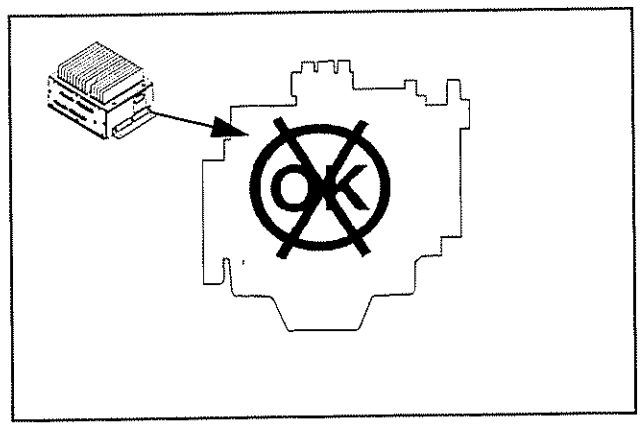

NOTE: *The mounting brackets are not used in this configuration and can be removed, however, the bracket attachment screws* ***MUST BE REPLACED*** *in the ECM case in order to ensure proper protection against the environment (i.e. dust and water ingress).*

Make sure there is no grease or dirt on the ECM mounting surfaces. Properly tighten the 4 mounting screws per the mounting screw size/grade torque recommendations to prevent mounting failures.

NOTE: *To comply with IP53 and NEMA-3R enclosure spray angle requirements, the ECM must be mounted with the connectors facing down. If the ECM is installed with the connectors facing sideways (heat-sink up), the customer must ensure that the installation complies with IP53 and NEMA-3R requirements. The ECM must* ***NEVER*** *be installed with the connectors facing up or with the heat-sink vanes oriented horizontally (level to the ground). The customer must also ensure that there is sufficient clearance for the wiring harnesses to be mounted to the ECM, and that the harnesses are properly supported to prevent undue stress or strain on both the harness and ECM connectors.*

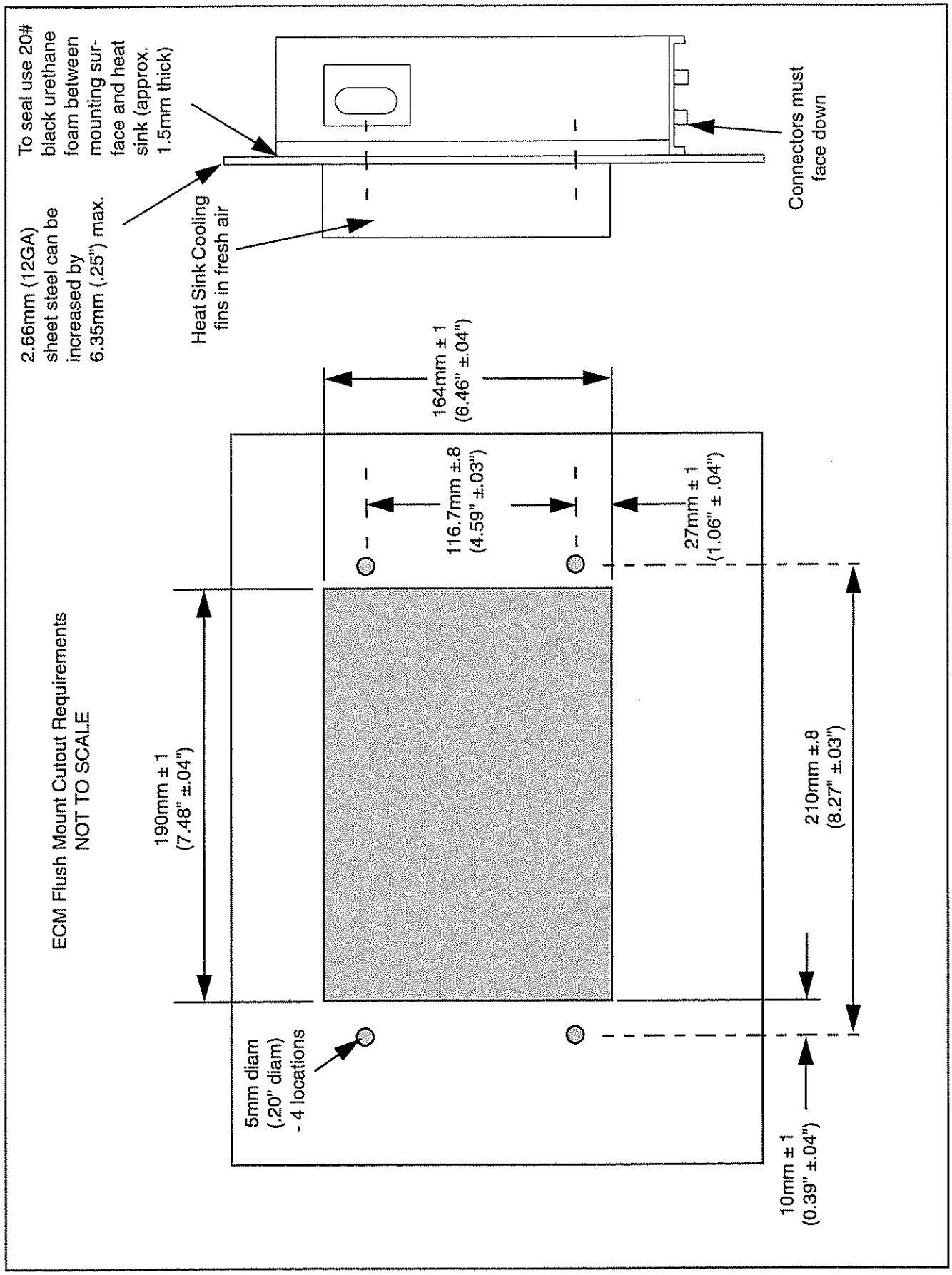
To seal use 20# black urethane foam between mounting surface and heat sink (approx. 1.5mm thick)
2.66mm (12GA) sheet steel can be increased by 6.35mm (.25") max.
Heat Sink Cooling fins in fresh air
Connectors must face down
ECM Flush Mount Cutout Requirements
NOT TO SCALE
164mm ± 1 (6.46" ±.04")
116.7mm ±.8 (4.59" ±.03")
27mm ± 1 (1.06" ± .04")
190mm ± 1 (7.48" ±.04")
210mm ±.8 (8.27" ±.03")
5mm diam (.20" diam) - 4 locations
10mm ± 1 (0.39" ±.04")

The customer is responsible for supplying a wiring harness(es) that interfaces with the two 25-pin ECM connectors, labeled 03 and 06, and the customer connections at Inline connectors D & E. See the ***Wiring Harnesses and Interface Connectors*** section on page 19 for further details.

A "keying plate" is attached to the ECM on the side with the connectors. This keying plate has keyways, a polarizing feature, that mate with the backshells included with the keyed connector kits supplied by the factory with each engine. The keying feature of the 25-position connector assemblies built using the kits is designed to prevent improper connection of the customer supplied generator set interface harness to ECM connectors 03 and 06. See ***Appendix H*** for detailed instructions on how to assemble the keyed connector kit parts.

The following chart will assist in identifying the interfacing wiring harness connectors:

Connector Number	Keying Polarization	Label Color
06	Key A (25 position)	Green
03	Key B (25 position)	Brown
05	Key A (50 position)	Green
02 (QSK45/60)	Key B (50 position)	Brown
02 (QSX15)	Key C (50 position)	Yellow

NOTE: *When attaching the keyed connectors to the ECM, the thumbscrews should be torqued to 0.79 - 0.90 N m [7-8 in-lb].*

NOTE: *Because the connectors provided with the keyed connector kits are a high quality part using gold-plated terminals, the connectors* ***DO NOT*** *have to be coated or packed with any type of protective lubricant or anti-corrosion compound.*

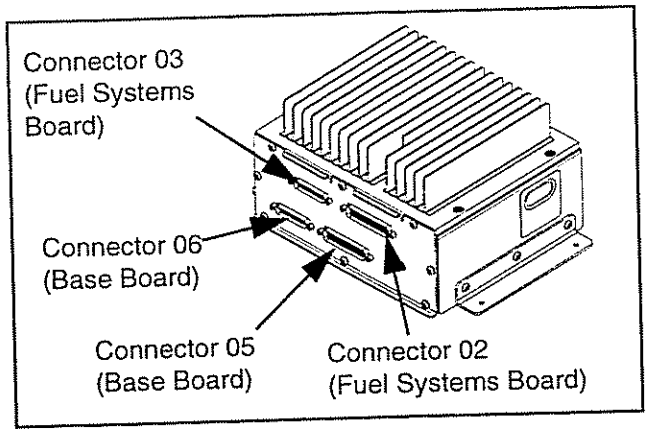

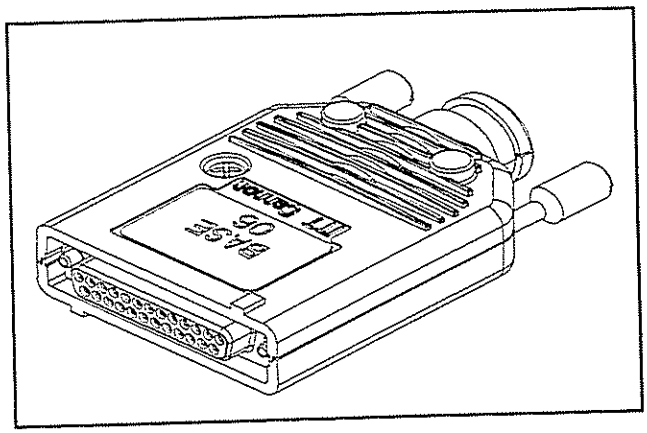

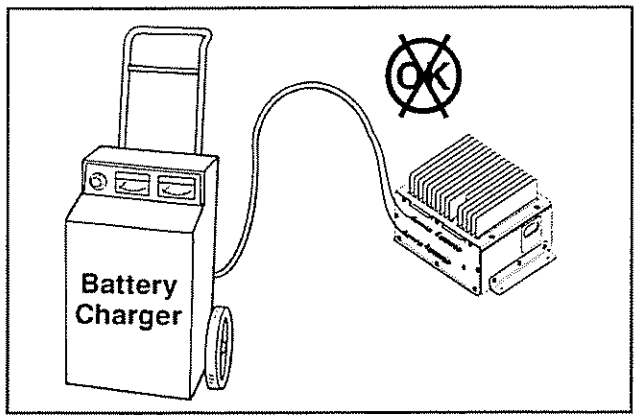

Power Source

The ECM is designed to operate at a nominal 24 VDC. The ECM can operate normally within a range of 18 to 35 VDC continuous and as low as 10VDC during cranking.

⚠ CAUTION ⚠

Do not connect the ECM to a battery charger. Due to the circuitry and method of operation of the chargers, the governor will not function properly. Connect the battery charger to the battery.

⚠ CAUTION ⚠

To avoid damage to the ECM, disconnect all electrical connections to the ECM and remove the ECM from the generator set prior to using any type of welding equipment that requires electrical power to operate.

NOTE: *To prevent loss of valuable diagnostic information, such as Fault Codes and Snapshot Data, power must be available to the ECM at all times during normal engine operation and for at least one minute following an engine shutdown.*

Positive / Isolated Grounding

When using a grounding method other than a negative ground system, where the electrical system ground reference is not connected to Battery (-), the following items must be taken into consideration to prevent damage to the GCS or to other electrical system components:

- Optical isolation devices are recommended for interfacing to the RS-485 Modbus Communications and the RS-232 InPower Electronic Service Tool datalinks.
- Any Load Sharing / Autosynchronization equipment interfacing to the GCS must use the same grounding method or be properly isolated electrically.
- The starter, battery charging alternator, and all wiring harnesses and components (i.e. protection diodes installed to prevent damage to relay contacts or relay drivers) must be designed to operate properly when connected using the grounding method being implemented.

Wiring Harnesses and Interface Connectors

The QSX15, QSK45, and QSK60 engines are shipped with a factory mounted Engine Harness and kit containing the ECM, Extension Harness, including the mate-with connectors, contacts, and connector accessories (keyed backshells and hardware) required for interfacing with ECM connectors 03 and 06. The Extension Harness is 3.3 m [10 ft.] in length. The customer is responsible for manufacturing the harness required for interfacing with ECM connectors 03 and 06.

A wiring harness that integrates the features of Inline Connector E, the 1-Pin Weather-Pack (as required), and other option components pre-installed and delivered with the engine (i.e. Crank Slave Relay, Starting Motor(s), and Battery Charging Alternator) is supplied, and factory installed, when certain options are purchased with the engine. If these options are not purchased with the engine, it is the customer's responsibility to manufacture and install the required wiring harness to interface with all required engine electrical components. All published application guidelines, requirements, and practices must be strictly followed.

The ECM has four connectors, two 50-pin Engine ECM Connectors connectors (labeled 02 and 05), and two 25-pin Customer ECM Connectors (labeled 03 and 06). Connectors 02 & 05 are used primarily for engine control related features. Connectors 03 & 06 are used primarily for customer control related features.

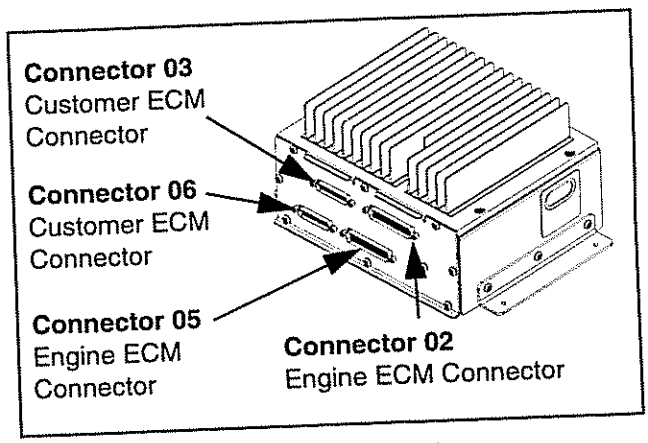

The Engine ECM Connectors directly interface with the Extension Harness. In conjunction with the Extension Harness, Engine Harness, engine mounted sensors, and engine fuel system, these connectors are used to provide engine sensor information to the ECM and fueling control commands from the ECM to the engine fuel system.

The Customer ECM connectors provide access to customer features of the ECM. It is the customer's responsibility to provide a harness that interfaces directly with these Customer ECM Connectors.

NOTE: *The maximum length between the ECM and the location for customer feature terminations (i.e. control panel, switches, potentiometers, speed bias signals, etc.) is 15.24 m [50 ft.], with the exception of the Modbus RS-485 communications data bus.*

See the ***Modbus Communications Datalink*** section on page 97 for further details. The conductor size to be used for the customer generator set interface harness terminations to the Customer ECM Connectors is 0.5 mm^2 [20 Ga.].

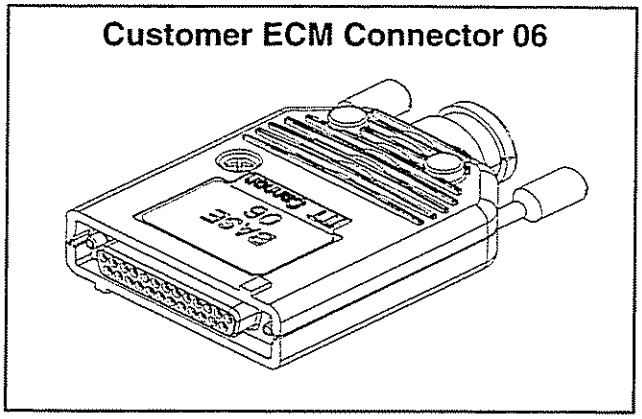

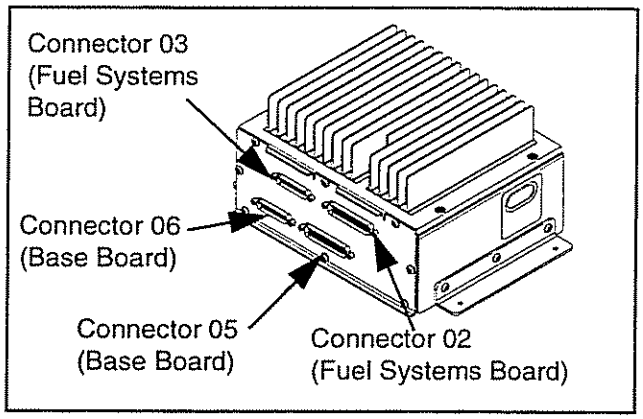

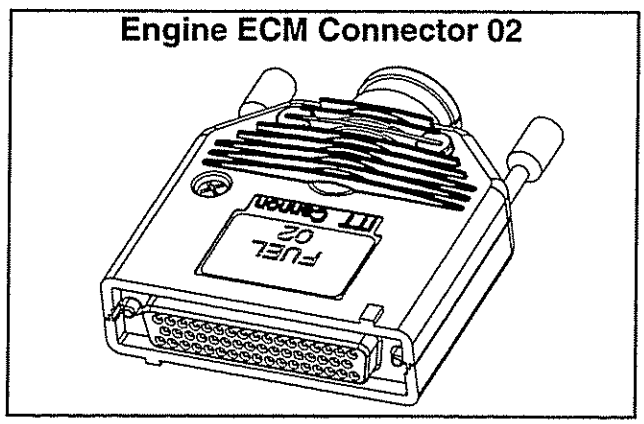

Keyed connector kits are included with each engine. The connector kits contain all of the necessary connector hardware required for the customer to interface with the two Customer ECM connectors. This includes the two 25-position mating connectors, a grommet for each connector, the necessary quantity of contacts, and the keyed connector backshells. The connector kits do not include the wires, or the hardware required to terminate the wires at the opposite end of the wiring harness (i.e. control panel terminations). See the ***Installation*** section on page 14 for further details about assembling the keyed connector kits and installing the customer supplied generator set interface harness.

The connector contacts provided in the keyed connector kits accept 0.5 mm^2 [20 Ga.] size conductor wire.

> ***NOTE:*** *The contacts included in the keyed connector kits are a non-standard part meeting high quality requirements. Substitute contacts* ***MUST NOT*** *be used.*

The connector backshells provided with the keyed connector kits have a polarized keying feature that, when properly installed on the customer generator set interface harness, prevents incorrect harness connections to the ECM.

> ***NOTE:*** *The customer is required to build the generator set interface harness using the hardware provided with the factory supplied keyed connector kits. Warranty claims related to the Customer ECM Connectors* ***WILL NOT*** *be honored unless the connector kit parts are used and assembled in accordance with the instructions supplied with the kits.*

Engine ECM Connectors

Connector 02

Engine ECM Connector 02 (Fuel System Board Connector) is a male 50-position D-subminiature plug with pins. The mate-with female connector on the Extension Harness is a 50-position D-subminiature receptacle with sockets.

Connector 05

Engine ECM Connector 05 (Base Board Connector) is a male 50-position D-subminiature plug with pins. The mate-with female connector on the Extension Harness is a 50-position D-subminiature receptacle with sockets.

> ***NOTE:*** *Both connectors 02 and 05, which are part of the factory supplied Engine Harness assembly, have a keying feature that prevents them from unintentionally being interchanged with one another.*

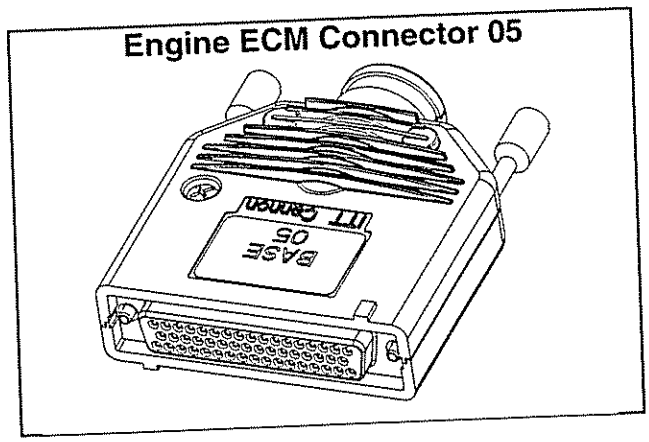

Customer ECM Connectors

Connector 03

Customer ECM Connector 03 (Fuel System Board Connector) is a male 25-position D-subminiature plug with pins. The mate-with female connector on the customer supplied generator set interface harness is a 25-position D-subminiature receptacle with sockets.

The following customer features are accessible via hardwired interface to Connector 03:

- Alternate Frequency Switch
- Crank Switch
- Droop Adjust
- Frequency Adjust
- ±2.5V Speed Bias
- ±0.2V Speed Bias
- Engine Speed, Oil Pressure and Coolant Temperature Meter Drivers
- Overspeed (OS), Low Oil pressure (LOP) and High Engine Temp (HET) Shutdown Lamp/Relay Drivers
- Pre-LOP and Pre-HET Warning Lamp/Relay Drivers
- Common Warning Lamp/Relay Driver
- Common Shutdown Lamp/Relay Driver

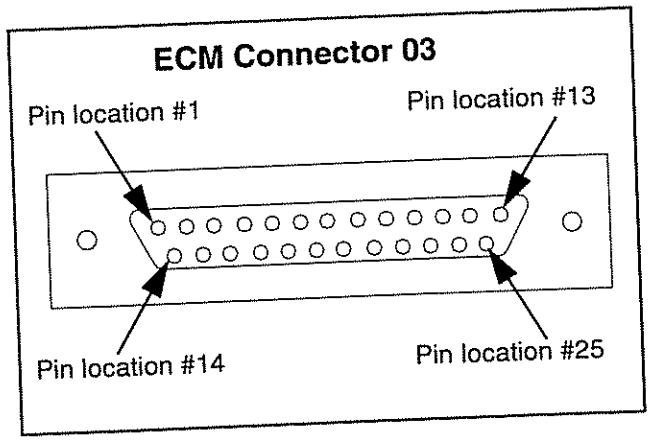

Connector 06

Customer ECM Connector 06 (Base Board Connector) is a male 25-position D-subminiature plug with pins. The mate-with female connector on the customer supplied generator set interface harness is a 25-position D-subminiature receptacle with sockets.

The following customer features are accessible via hardwired interface to Connector 06:

- Modbus RS-485 Communications Datalink
- Run/Stop Switch
- Idle/Rated Switch
- Emergency Stop Switch
- Diagnostic Mode Switch (Fault Flash Out Enable)

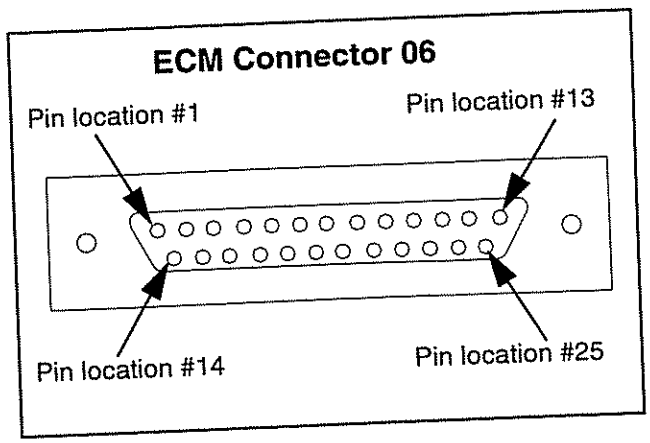

- Fault Acknowledge Switch
- Starter Control (Crank Relay Coil Driver)
- Fail-to-Start Lamp / Relay Driver
- Backup Start Disconnect Status

> ***NOTE:*** *As mentioned prior, the factory supplied connector kits for connectors 03 and 06 include backshells with a keying feature that, when properly installed on the customer generator set interface harness, prevents them from unintentionally being interchanged with one another.*

Extension Harness

The Extension Harness provides the means for mounting the ECM off of the engine, elsewhere on the generator set or some other remote location. This is accomplished by extending the circuits from the Engine Harness Inline connectors, located near the engine's flywheel housing, to ECM Connectors 02 and 05. The Inline Connectors comply with IP54/NEMA-4 specifications.

The Extension Harness allows access to the following customer features of ECM connector 05 via hardwired interfaces to Inline Connector D:

- Inline Connector D
  - Governor Gain Adjust
  - Run Relay Contact Status
  - Crank Relay Contact Status

Engine Harness

The factory supplied Engine Harness allows access to the following customer features of ECM connector 05 (including both connectors 02 and 05 for ECM Battery (+) and GND) via hardwired interfaces to Inline Connector E and the 1-Pin Weather-Pack connector:

- Inline Connector E
  - Crank Slave Relay Coil Supply Voltage
  - Crank Slave Relay Contact Status
  - ECM Power [Battery (+)]
  - ECM Ground [GND]
- 1-Pin Weather-Pack
  - Battery Charging Alternator Flashout

Further details discussing customer connections to each Inline Connector follow.

Inline Connectors

Inline Connector A, B and C

Inline Connectors A, B and C contain wiring for timing and fueling control actuators, the fuel shut-off solenoid driver, engine sensors, diagnostic mode enable, and service tool RS-232 communications datalink signals. Pre-wired by Cummins, OEM wiring is ***prohibited*** at these inline connectors.

⚠ CAUTION ⚠

No attempt should be made to bypass existing engine sensors or actuators or to operate the engine using 3rd party governor control systems.

Inline Connector D

The inline connector D requires customer supplied wiring for Crank Relay contacts, Run Relay contacts, and the Governor Gain Adjust potentiometer.

NOTE: *The Run Relay contact connections are only used when the battery charging alternator requires additional energy to turn-on voltage regulation at low speeds. See the* ***Battery Charging Alternator Flashout*** *section on page 25 for further details.*

Customer Supplied Wiring for Inline D

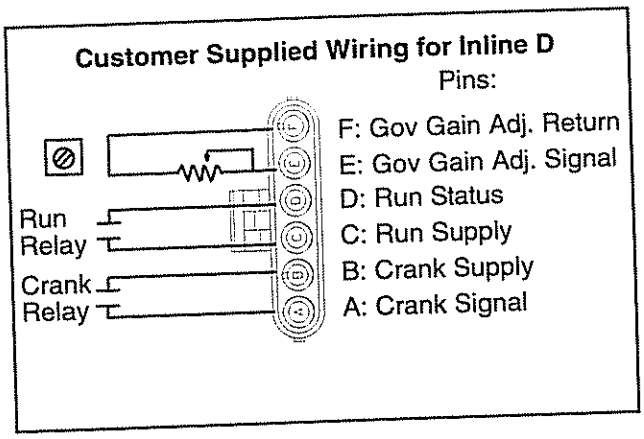

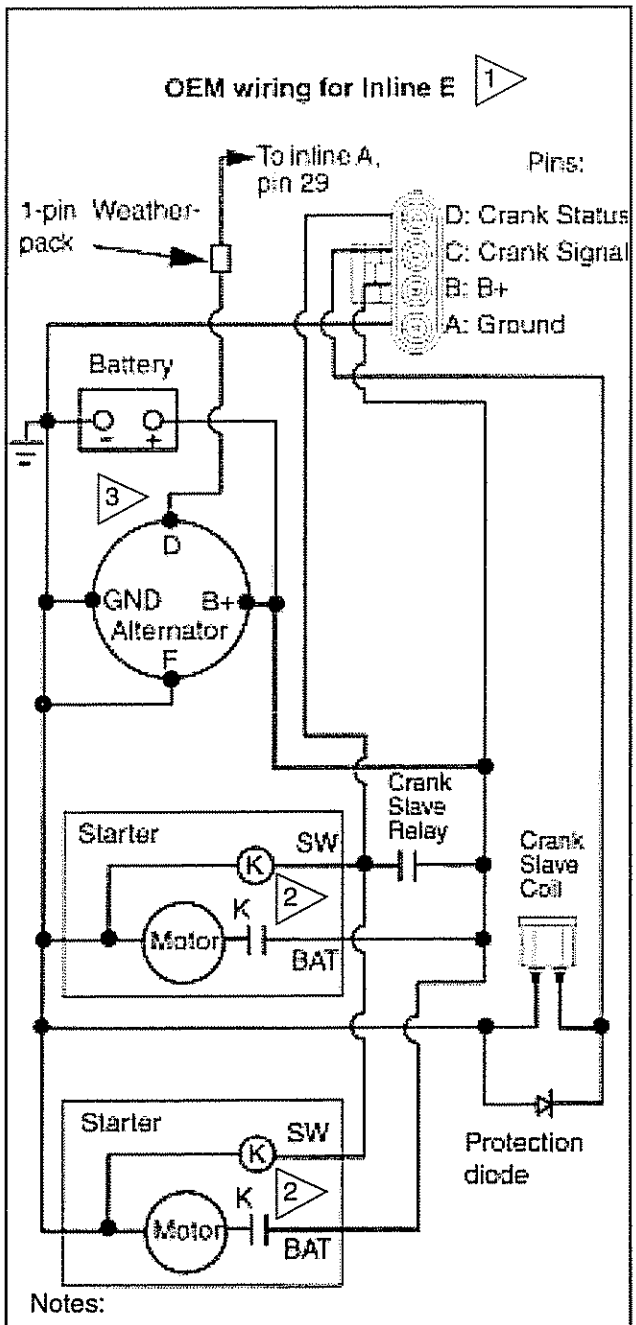

Notes:

1. Cummins offers options for purchasing a battery charging alternator and / or starting motor(s) with the engine. If either option is purchased, the appropriate wiring harnesses are included. If the customer has not purchased either of these options and chooses to install their own electrical accessories, they must also provide the proper wiring harness that interfaces to Inline Connector E.
2. "K" indicates relay and associated contacts.
3. "D" indicates Charging Alternator Flashout Terminal

Inline Connector E

The QSX15, QSK45 and QSK60 utilize a 4 pin inline connector for crank signal and status, Battery (+) and Ground (GND) connections.

If either the optional battery charging alternator or optional starter(s) are not purchased with the engine, the customer must supply the required wiring harness that interfaces with Inline Connector E and the customer supplied device(s).

When using a customer supplied starter or alternator the following electrical system and controls related application items must be considered:

- Starter Motor(s)
  - Starting system voltage
  - Case grounded or case insulated
  - Magnetic switch mounting
  - Battery cranking capacity
  - Special requirements for cold cranking (i.e. additional battery capacity)
  - Wiring and connections
    - > Cable Routing
    - > Electrical grounding/bonding
    - > Cable size (voltage drops & circuit resistance)
    - > Diode protection of relays and relay drivers

⚠ WARNING! ⚠

Due to the high Pull-In and Hold-In current draw of the typical starter motor solenoid, a magnetic switch (also called Crank Slave Relay) is required. When using a magnetic switch, a primary Crank Relay must be used to power the magnetic switch (Crank Slave Relay). A protection diode, sometimes referred to as a free-wheeling or fly-back diode, must be installed in parallel with the magnetic switch coil to prevent back-EMF from the coil causing damage to the primary Crank Relay contacts.

- Alternator
  - Cable Routing
  - Electrical grounding/bonding
  - Cable size (voltage drops & circuit resistance)

Battery Charging Alternator Flashout (1-Pin Weather-Pack)

The Alternator Flashout output provides battery power (supplied through the Run Status input on pin 18 of ECM connector 05) to the rotor windings of the battery charging alternator when the Run Relay contacts at connector Inline D (Pins C & D) are closed. The Flash Status output (Alternator Flashout output) is used on some battery charging alternators to provide the additional energy required to turn on the alternator voltage regulator at low speeds.

The customer can implement this feature by connecting the battery charging alternator flashout terminal to the 1-Pin Weather-Pack connector. The contacts of a Run relay must be connected to pins C & D of Inline Connector D to supply battery power, through the ECM, to the alternator flashout terminal when the Run Relay is energized.

> ***NOTE:*** *If the alternator flashout output is not used, the Run Relay contact connections to Inline Connector D* ***DO NOT*** *need to be made.*

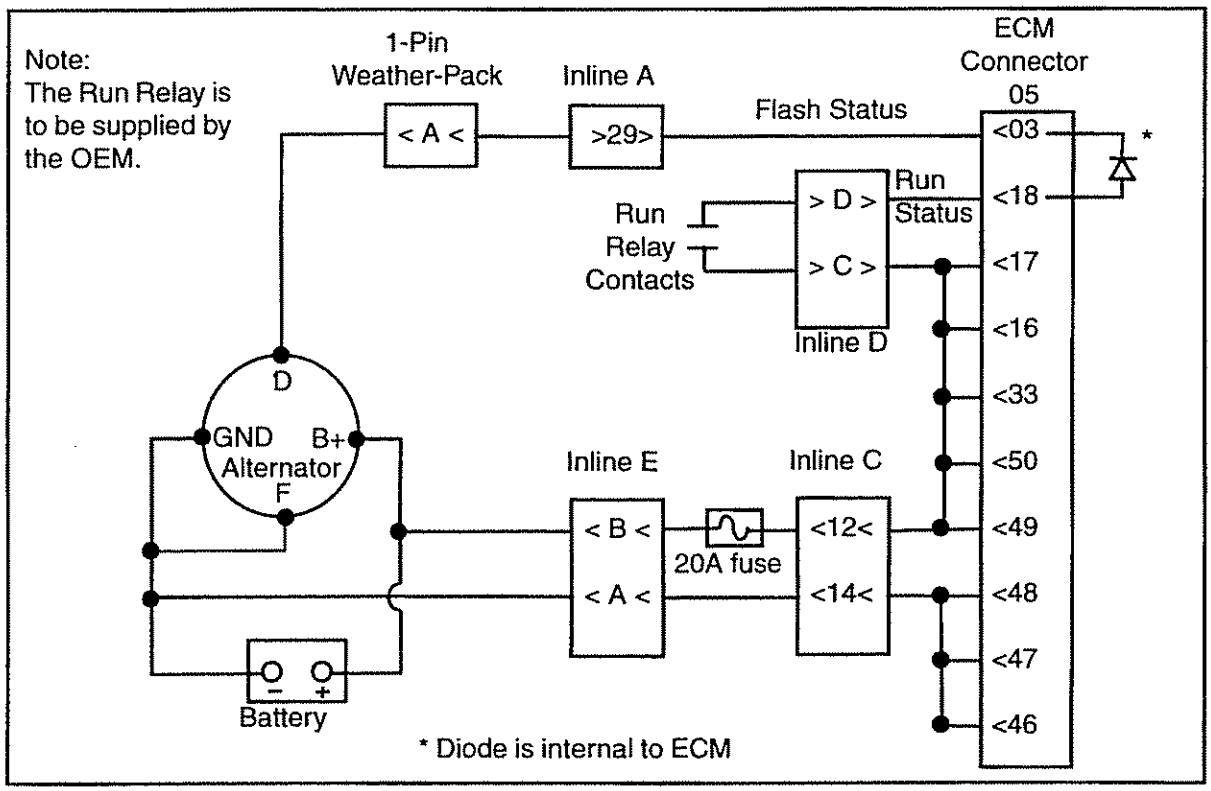

Inline Connector D, E & 1-Pin Mating information		
Connector & Contact Position	Mate-With Part No. *	Description
Inline D	12010975	Packard Weather-Pack 6-position Shroud
A	12124587	3.0 mm^2 (12 AWG) Weather-Pack Male Terminal
B	12124587	3.0 mm^2 (12 AWG) Weather-Pack Male Terminal
C	12089040	0.5 mm^2 (20 AWG) Weather-Pack Male Terminal
D	12089040	0.5 mm^2 (20 AWG) Weather-Pack Male Terminal
E	12089040	0.5 mm^2 (20 AWG) Weather-Pack Male Terminal
F	12089040	0.5 mm^2 (20 AWG) Weather-Pack Male Terminal
Inline E	12015797	Packard Weather-Pack 4-position Tower
A	12124581	3.0 mm^2 (12 AWG) Weather-Pack Female Terminal
B	12124581	3.0 mm^2 (12 AWG) Weather-Pack Female Terminal
C	12124581	3.0 mm^2 (12 AWG) Weather-Pack Female Terminal
D	12010996	0.8 mm^2 (18 AWG) Weather-Pack Female Terminal
1-Pin	12010996	Packard Weather-Pack 1-position Shroud
A	12089040	0.8 mm^2 (18 AWG) Weather-Pack Male Terminal

* All Part No.'s are Packard Weather-Pack. Use the cable seal specified on the corresponding drawing for each terminal.

Inline Connector Mate-With Information

Mating connector information for Inline connectors D & E and the 1-pin Weather-Pack are identified at the left. Each conductor of the mating connector should use the specified terminal size and the corresponding wire conductor size.

The following pages include figures showing the various sensor connection locations on the wiring harnesses. Also included are figures, and schematic diagrams, for the optional battery charging alternator and starter system options available for purchase and use with the respective engines.

QSX15 Engine Harness

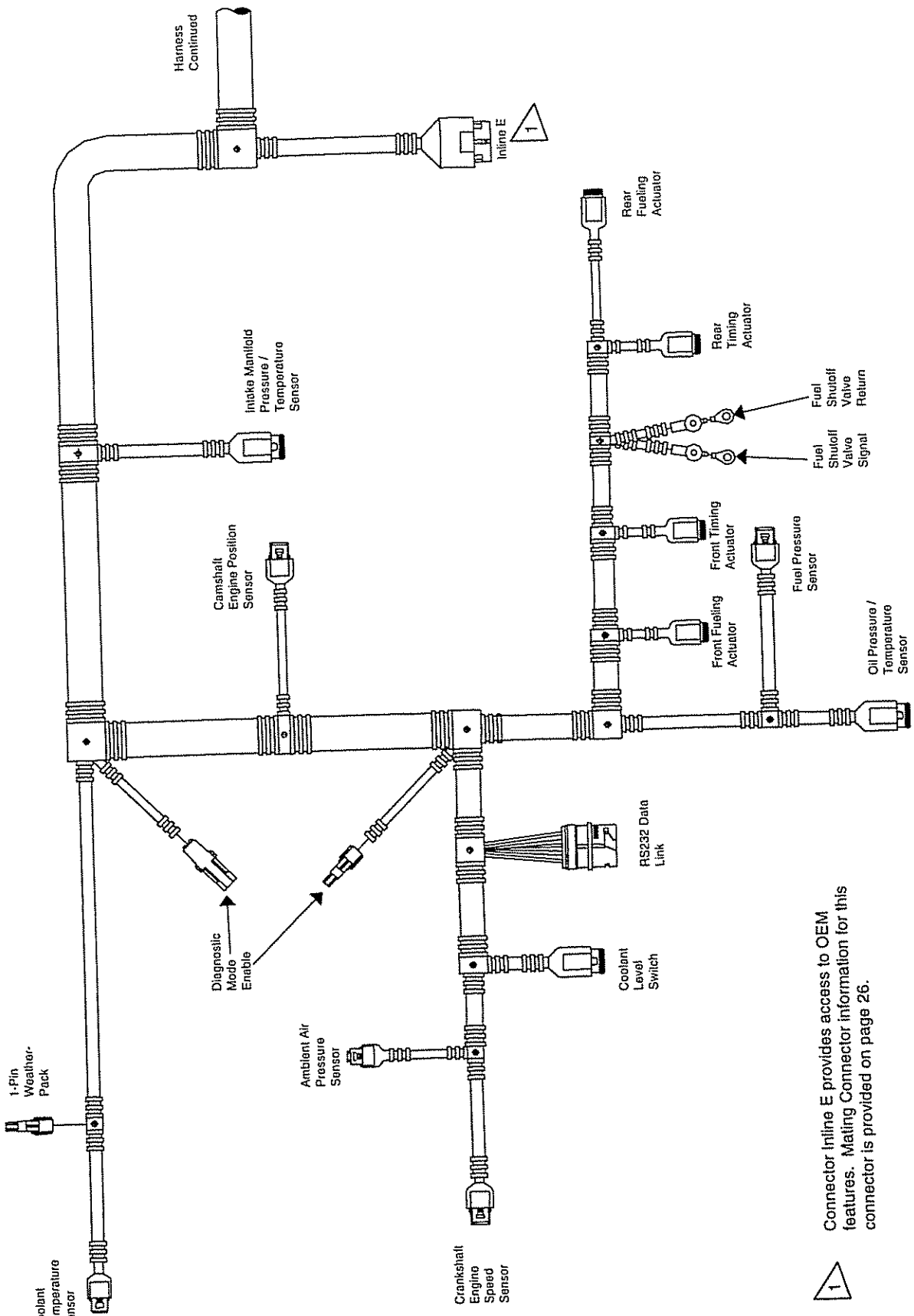

QSX15 Engine Harness (Continued)

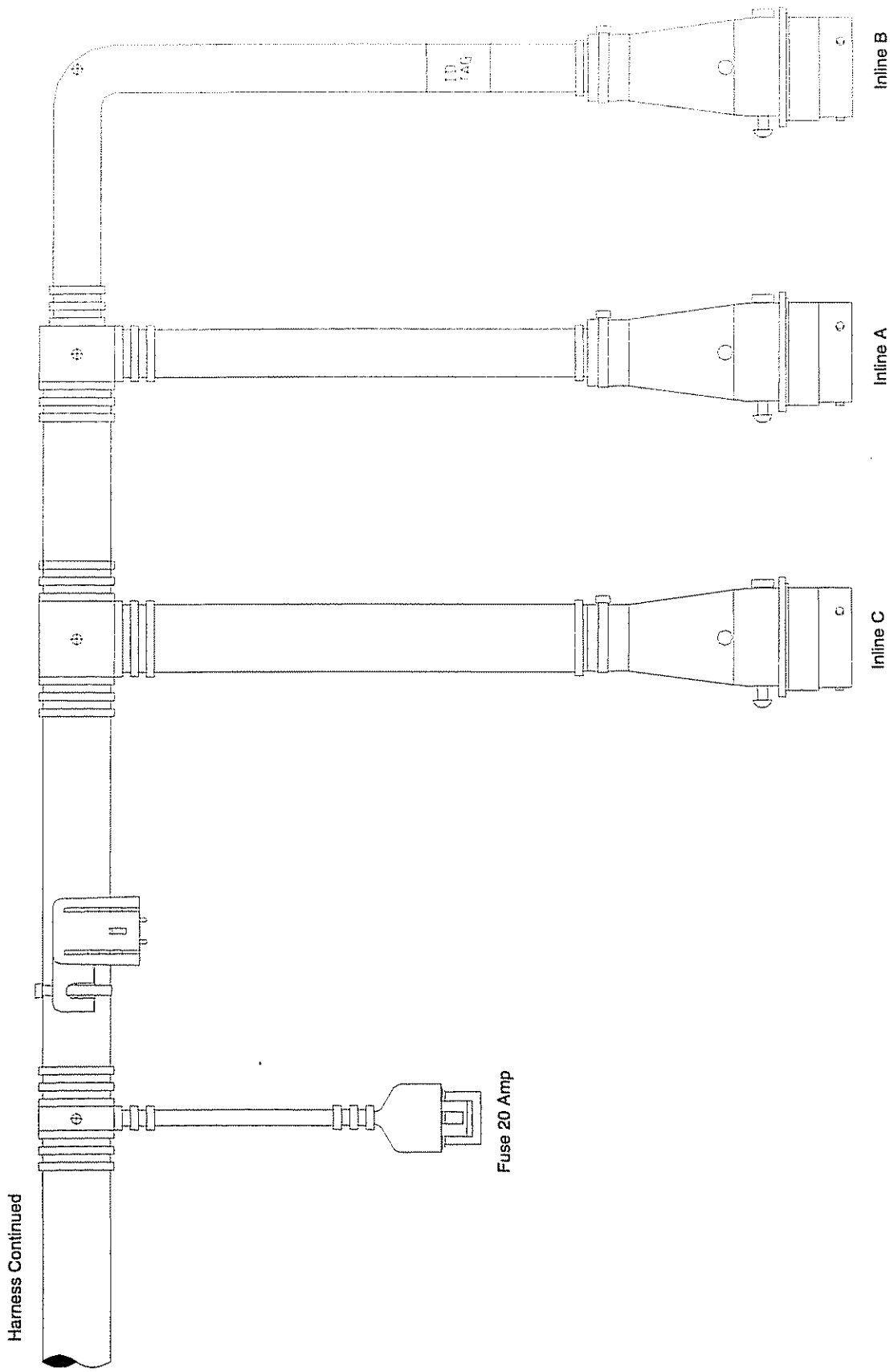

QSX15 Extension Harness

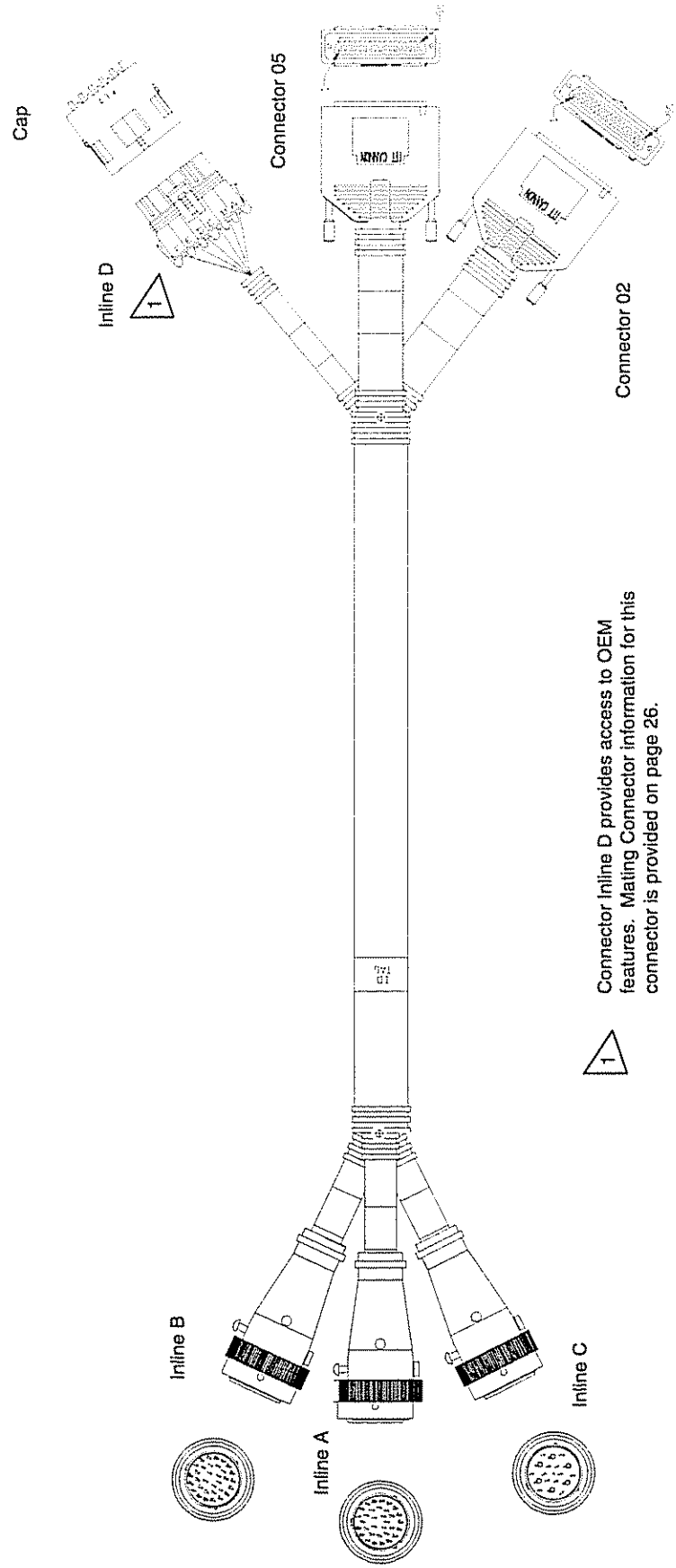

QSX15 Alternator and Starter Harness

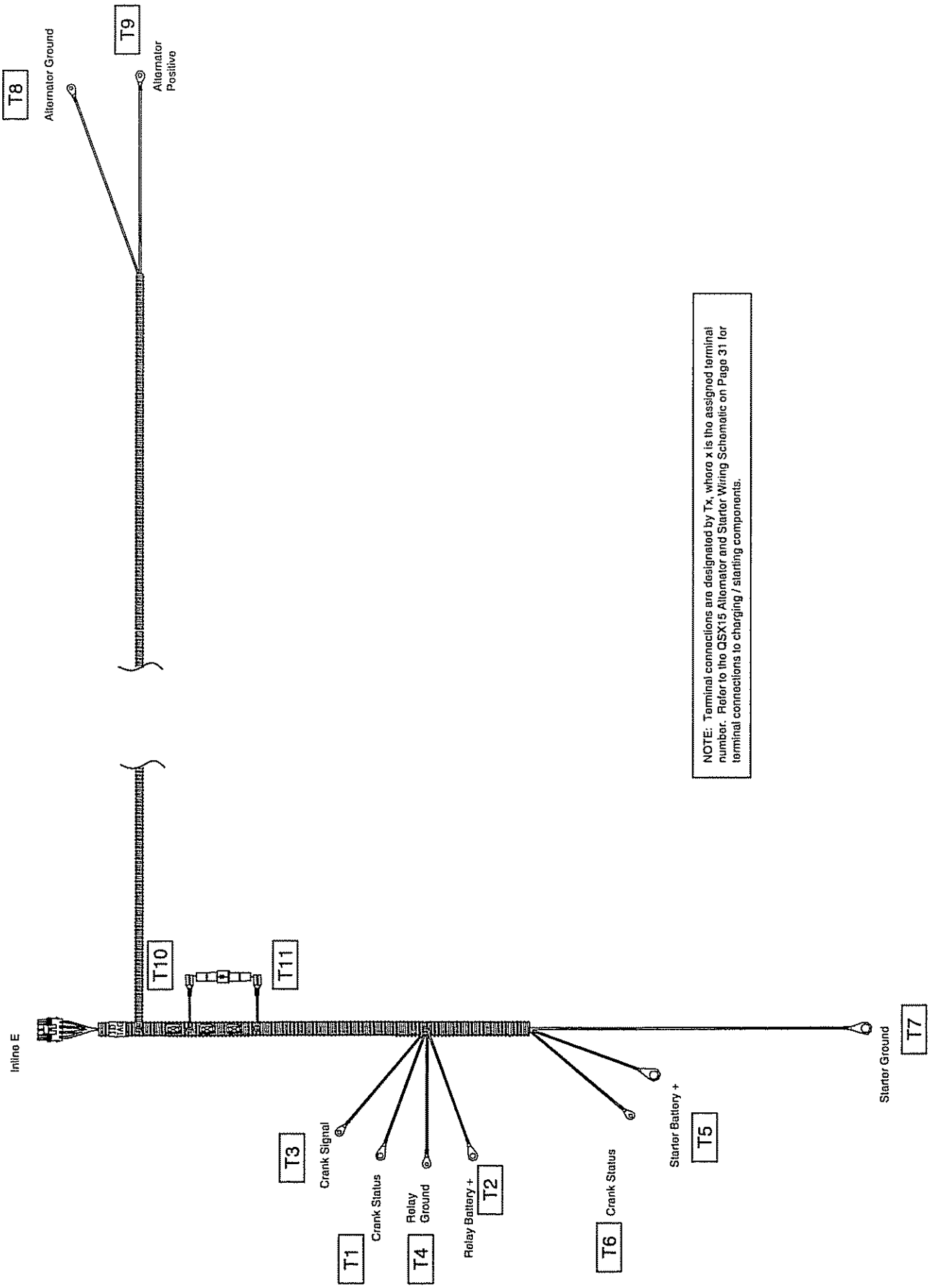

QSX15 Alternator and Starter Wiring Schematic

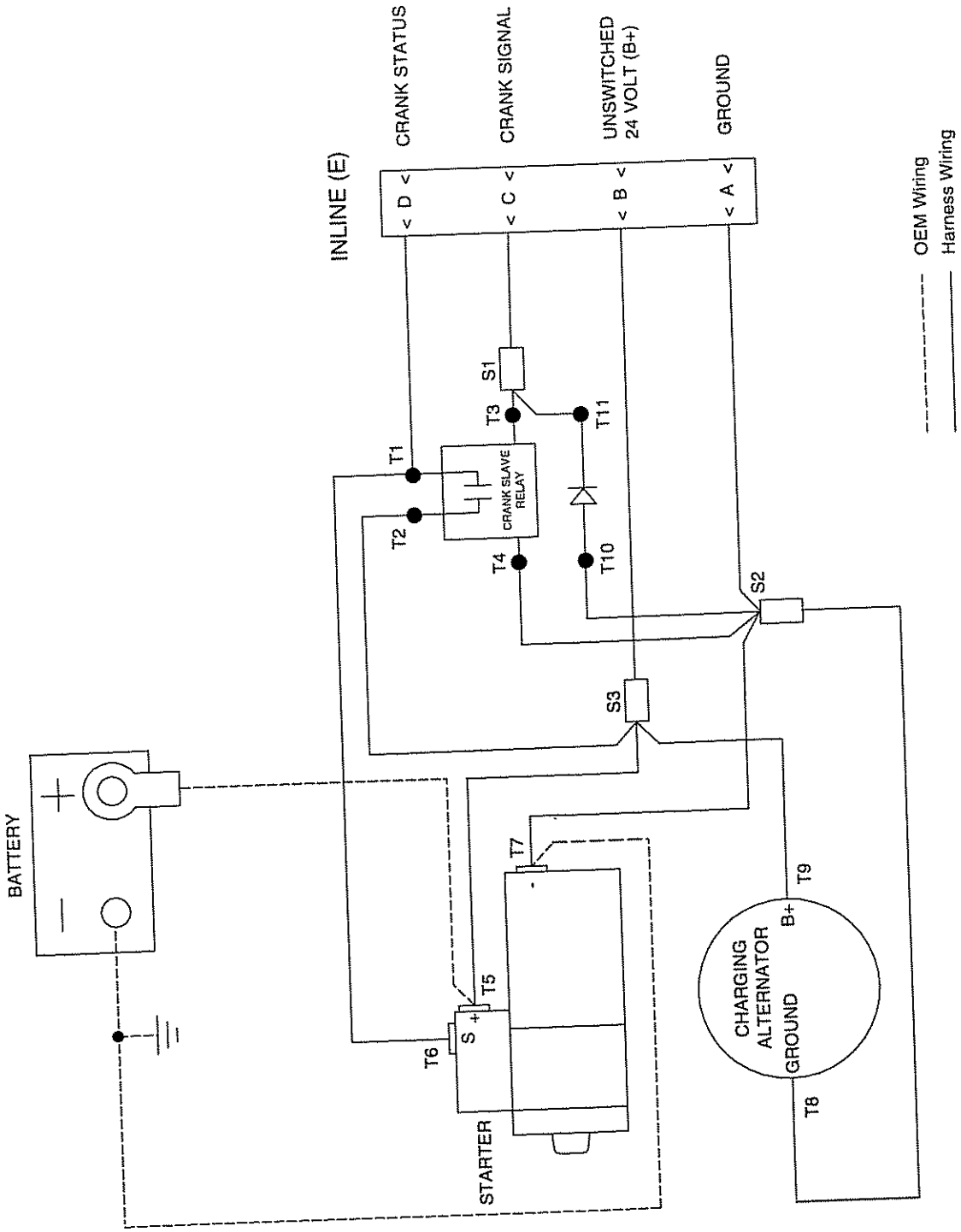

QSK45 / QSK60 Engine Harness

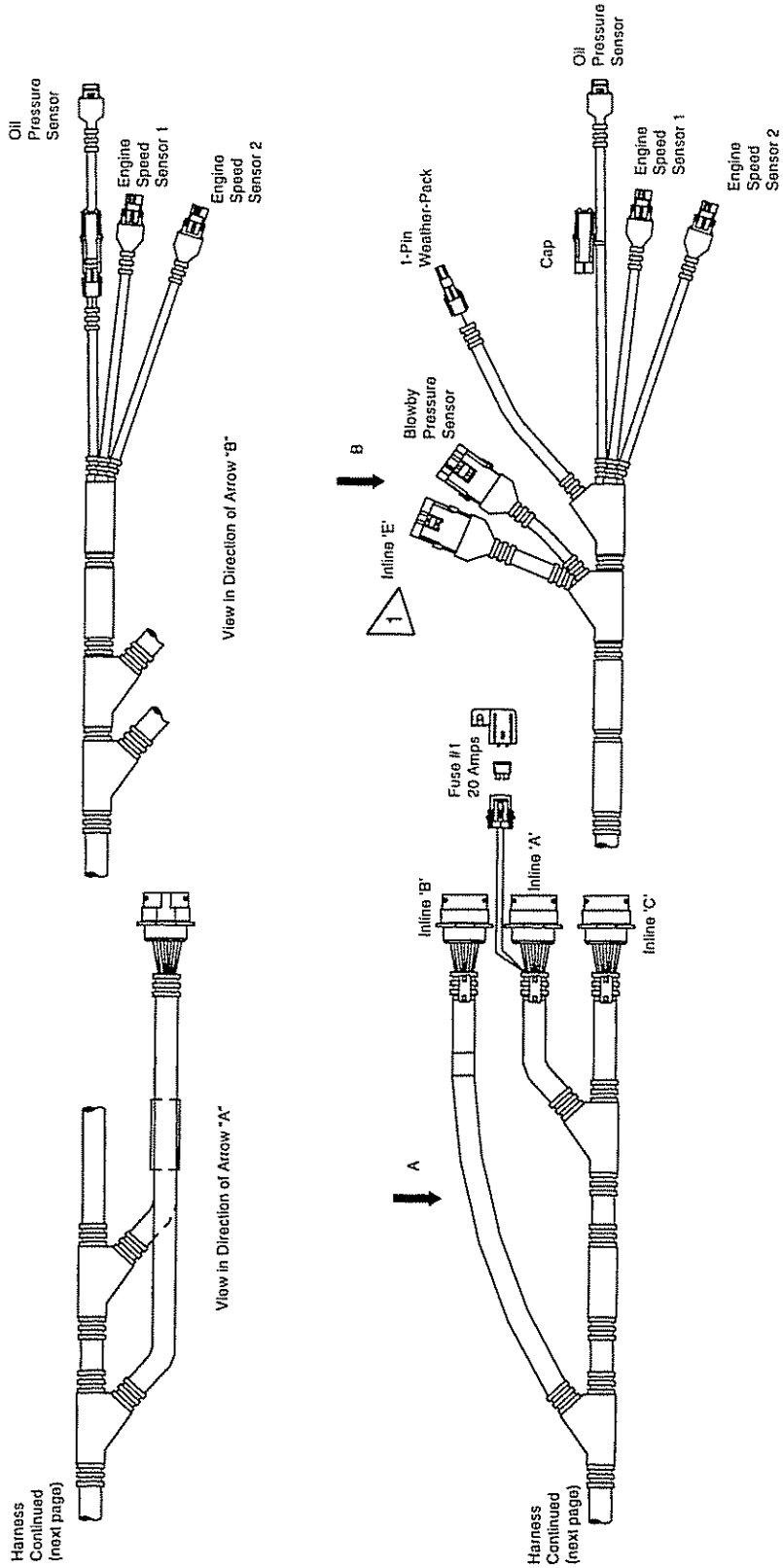

Connector Inline E provides access to OEM features. Mating Connector information for this connector is provided on page 26.

1

QSK45 / QSK60 Engine Harness (Continued)

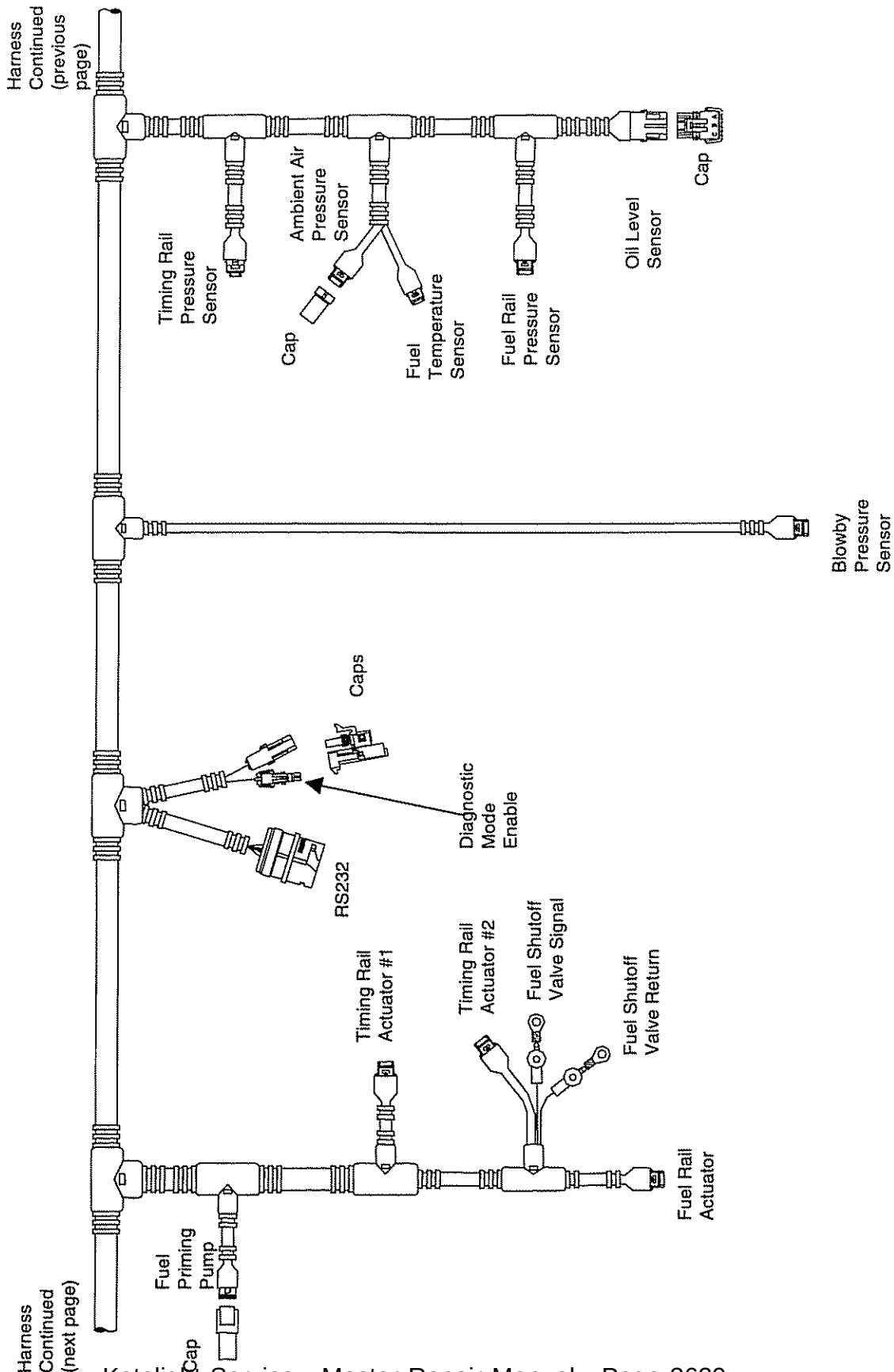

QSK45 / QSK60 Engine Harness (Continued)

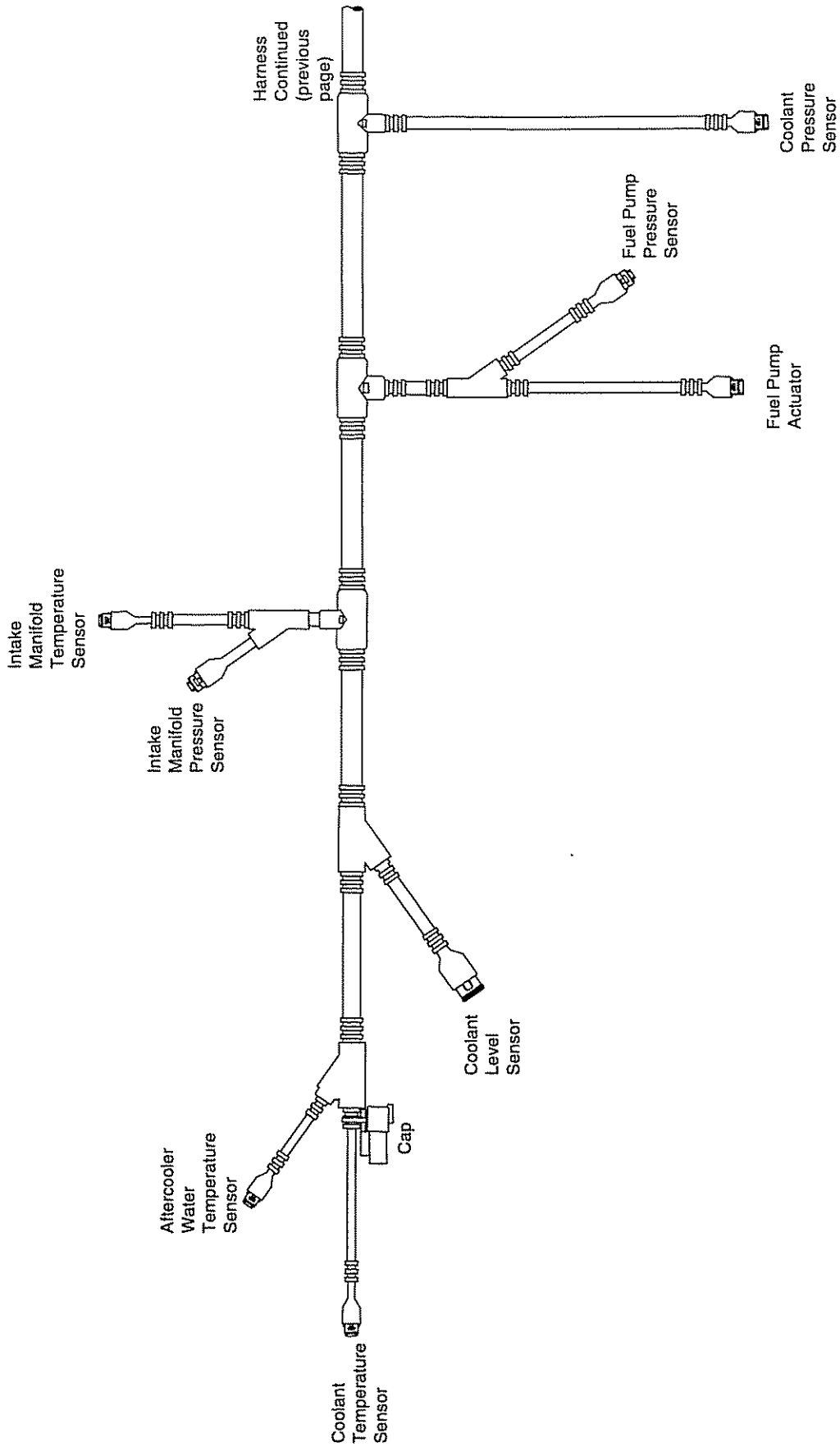

QSK45 / QSK60 Extension Harness

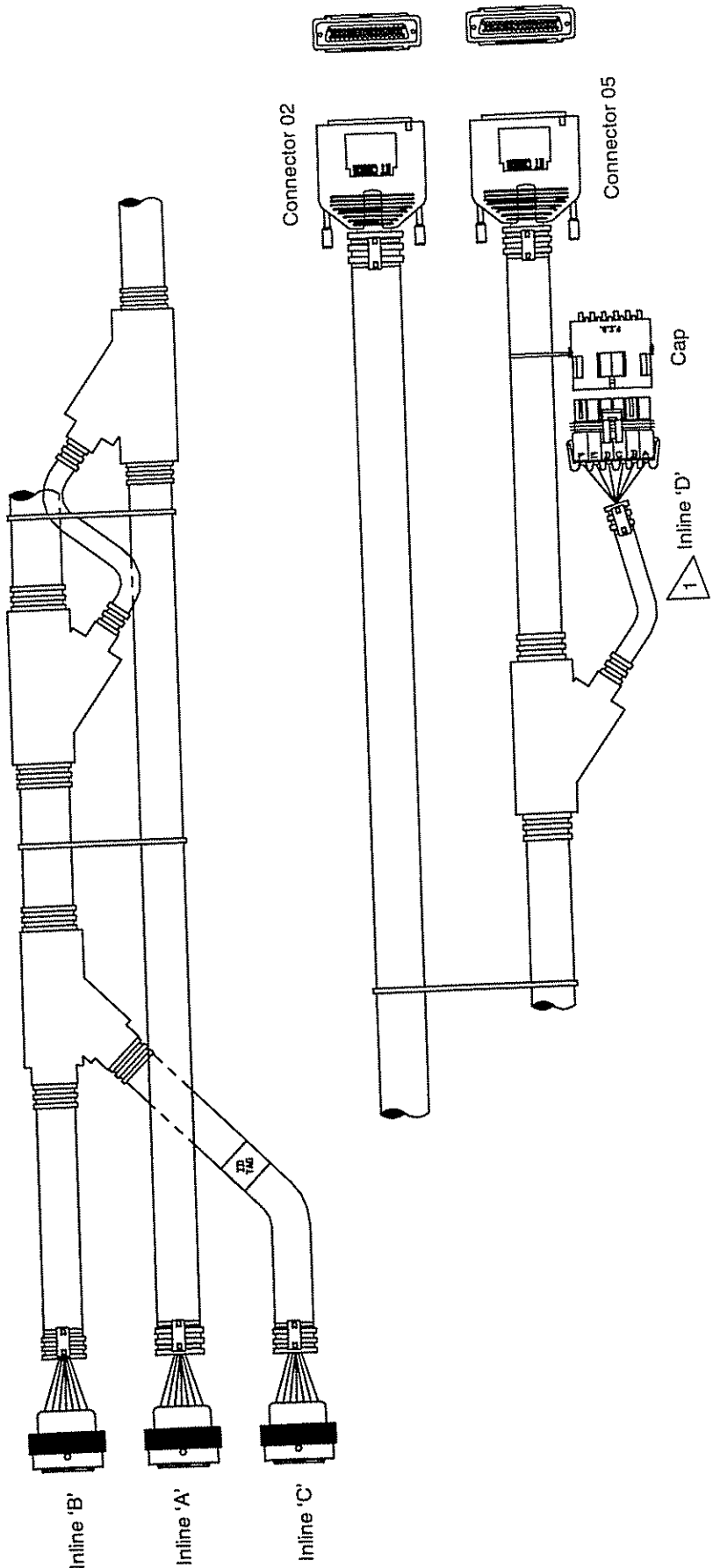

1 Connector Inline D provides access to OEM features. Mating Connector information for this connector is provided on page 26.

QSK45 / QSK60 Starter Harness, Right Bank

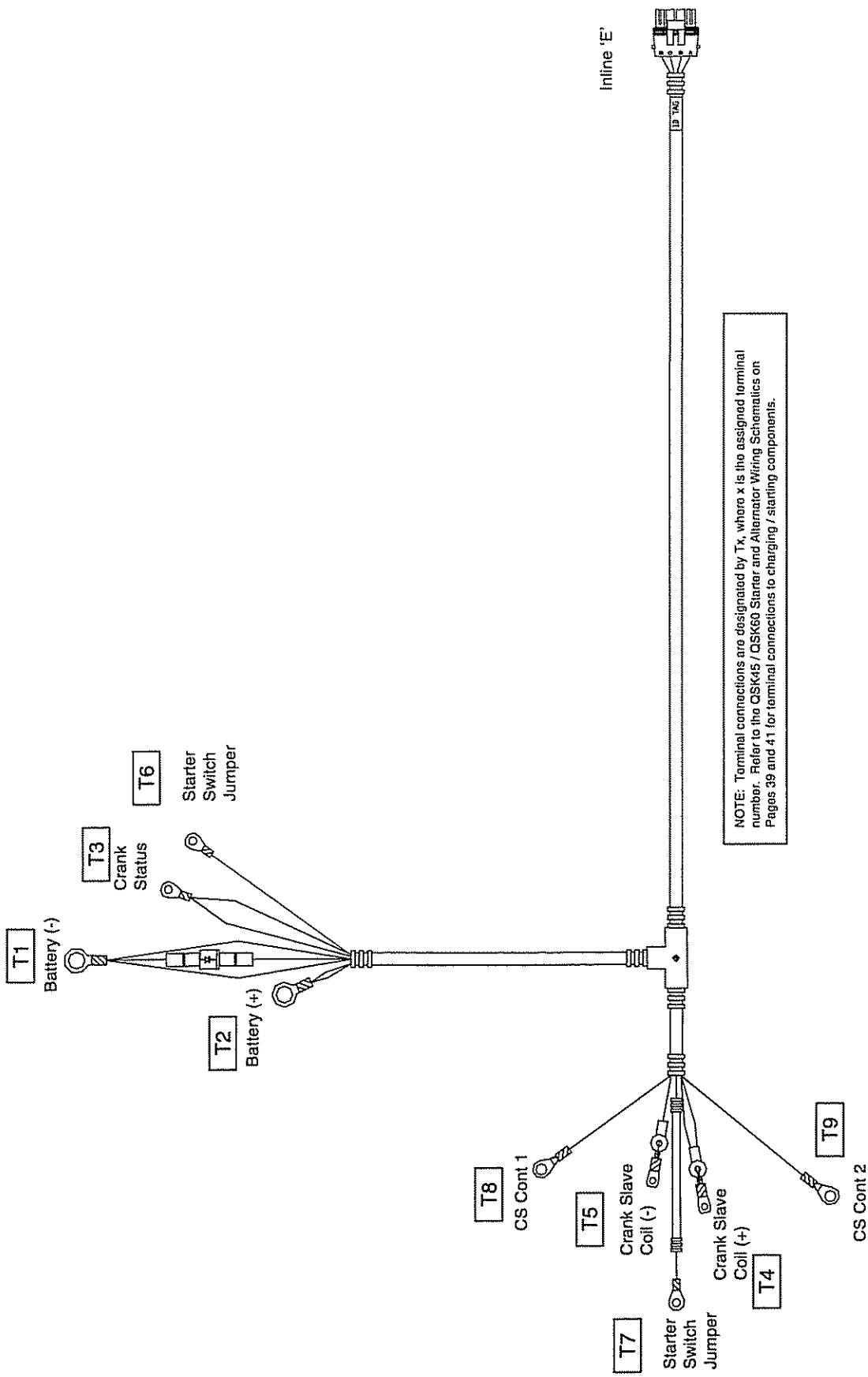

QSK45 / QSK60 Starter Harness, Left Bank

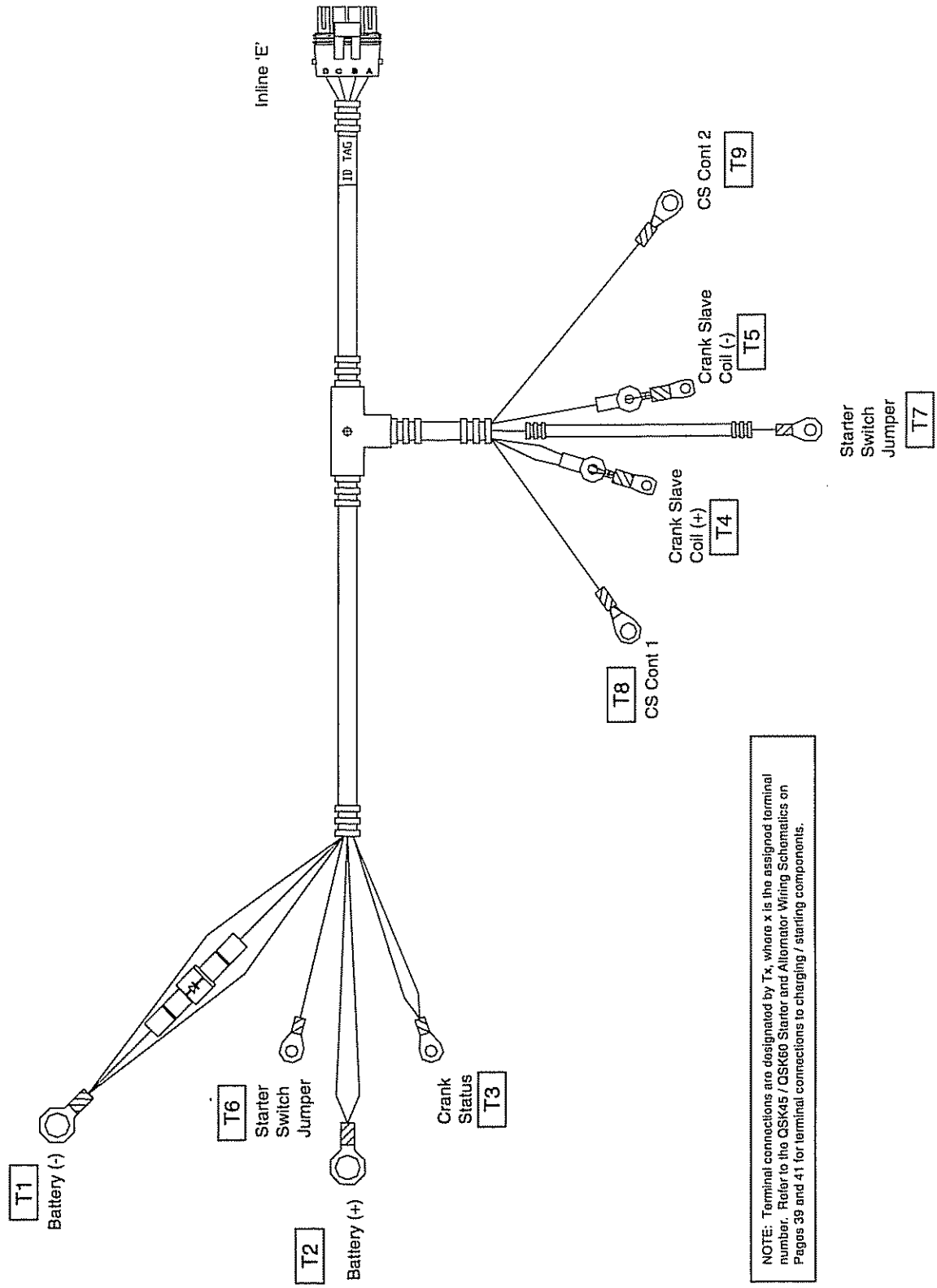

QSK45 / QSK60 Delco Alternator to Starter Harness, Left & Right Bank

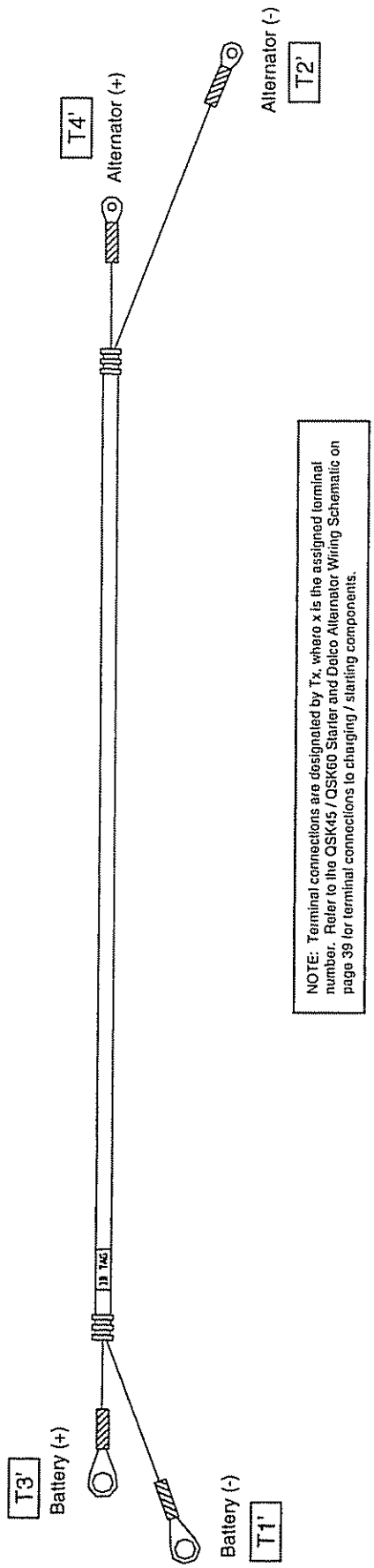

QSK45 / QSK60 Starter and Delco Alternator Wiring Schematic

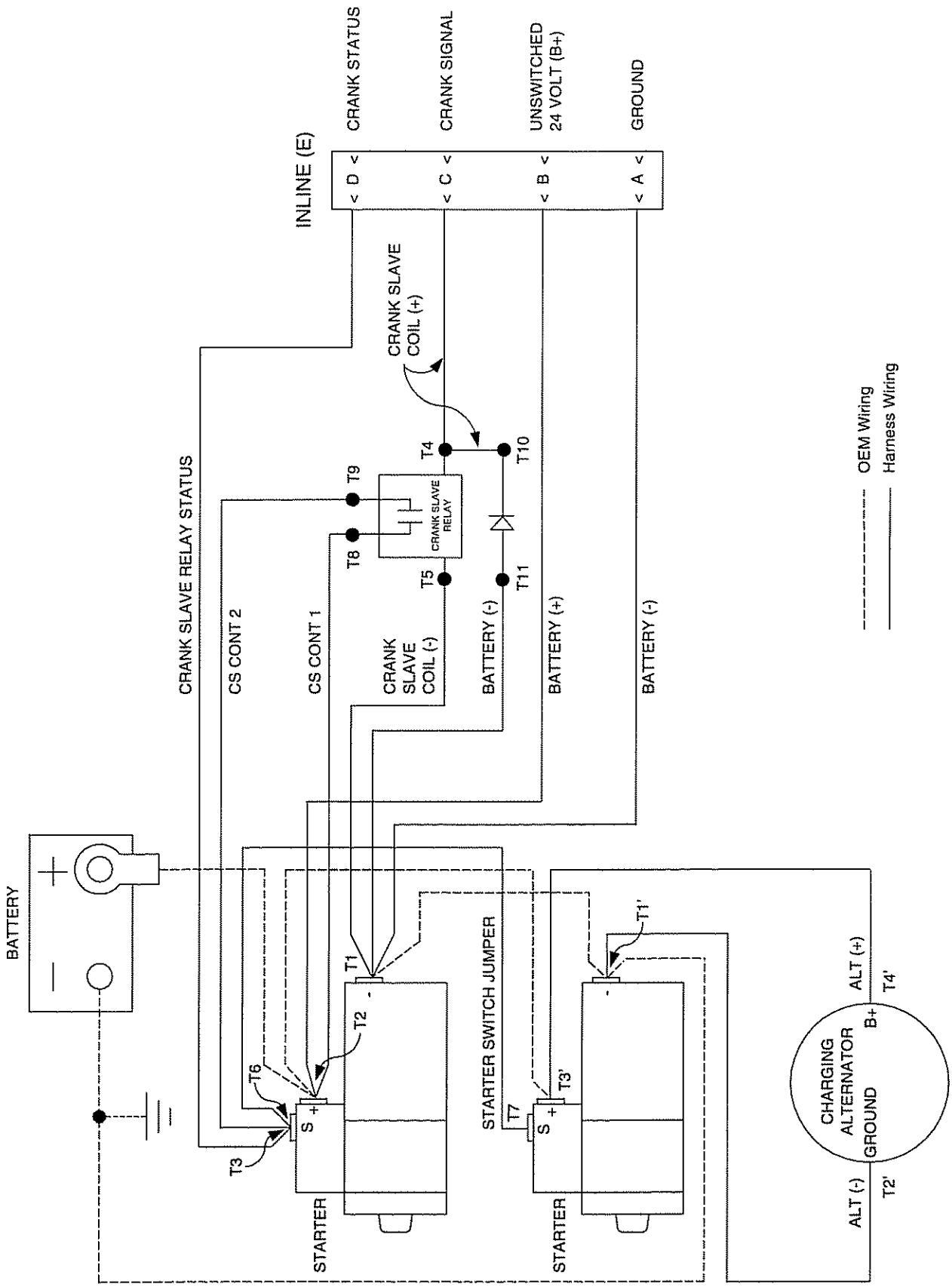

QSK45 / QSK60 Prestolite Alternator to Starter Harness, Left & Right Bank

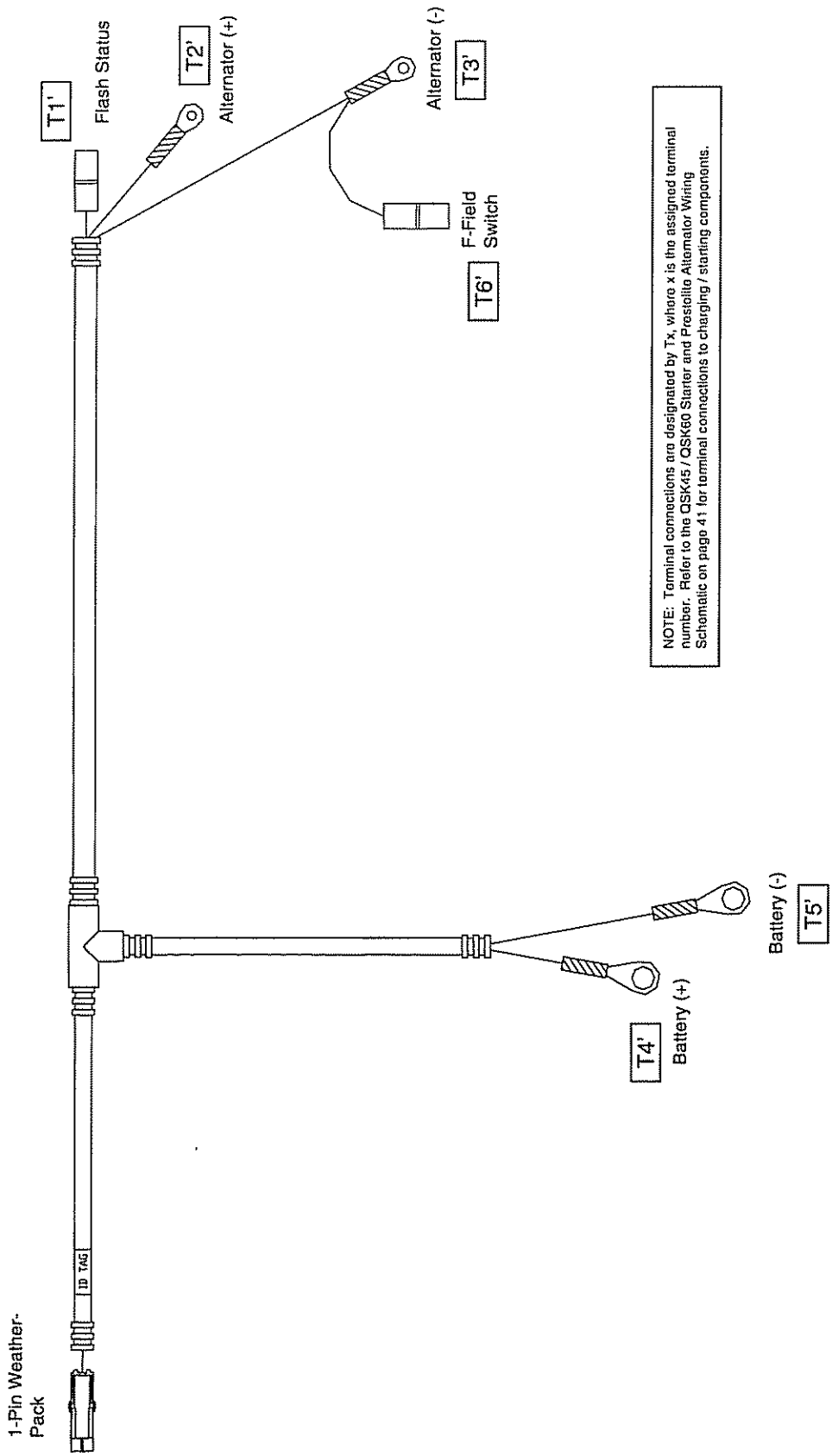

QSK45 / QSK60 Starter and Prestolite Alternator Wiring Schematic

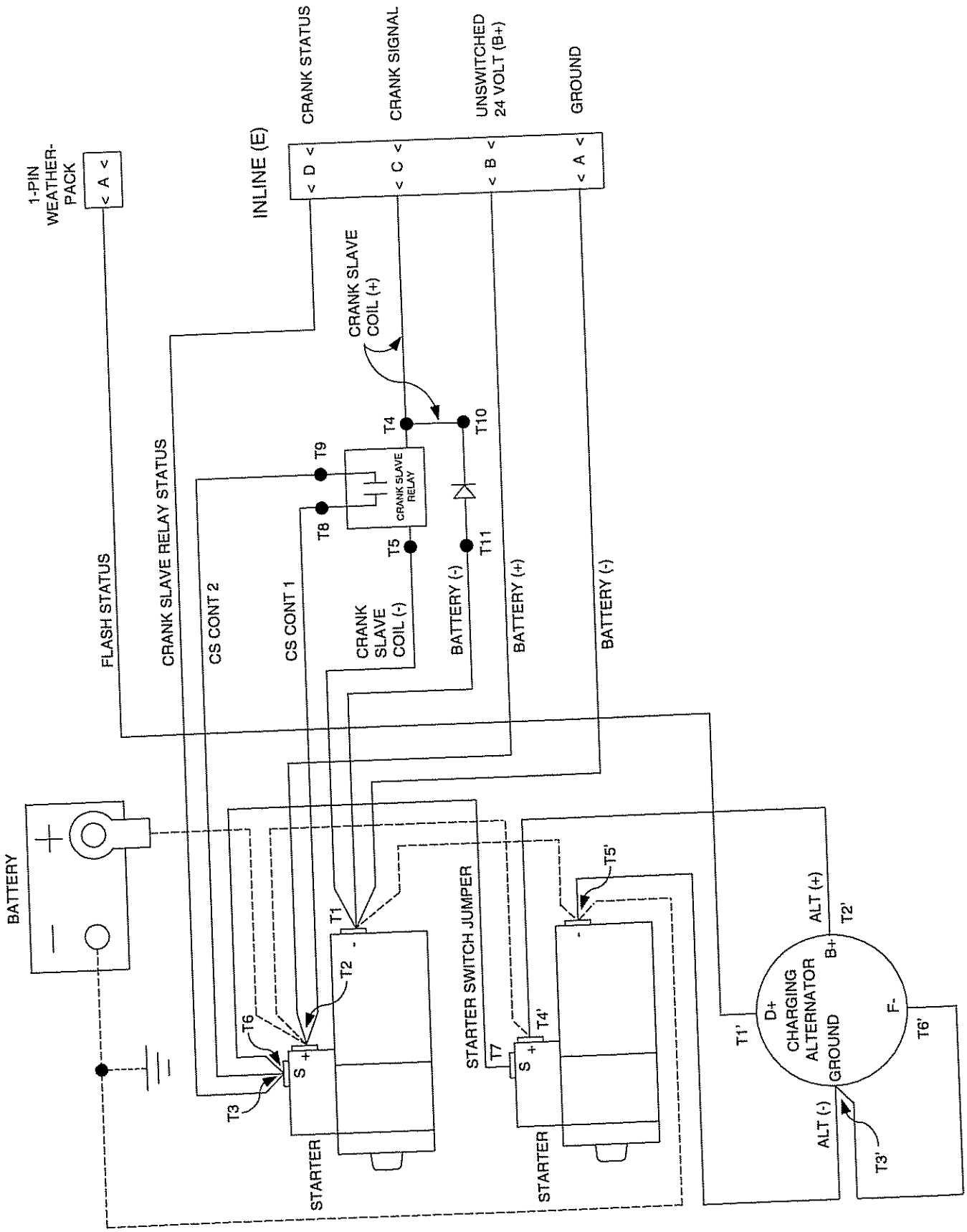

Magnetic Pickup Adjustment

QSX 15 Only:

The QSX15 engine model uses a hall effect type sensors for detecting engine speed and cam position. This type of sensor does not require any adjustment.

QSK45 and QSK60 Only:

The QSK45 and QSK60 engine models us a magnetic pickup type sensor, an electromagnetic device, mounted in the flywheel housing for detecting engine speed. The flywheel housing is set up with two magnetic pickup hole locations. One of these two hole locations is used for the GCS speed sensor.

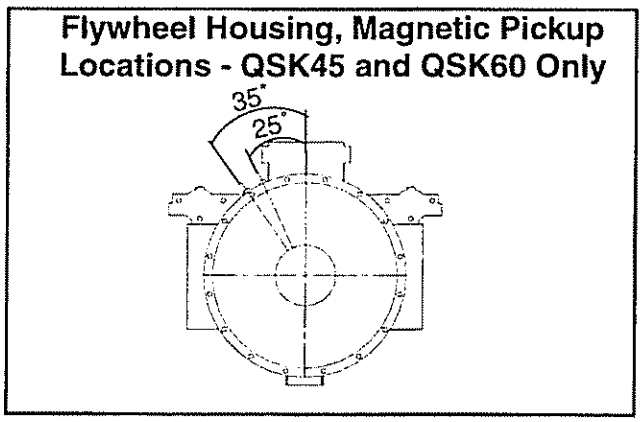

The GCS speed sensor is a dual-coil magnetic pickup design that has two connectors, one for each coil. Both coils must be connected to the engine harness to provide backup speed detection in the event that one of the two coils fails.

To adjust the speed sensor, ensure that a ring gear tooth is centered under the magnetic pickup hole. Rotate the flywheel if necessary.

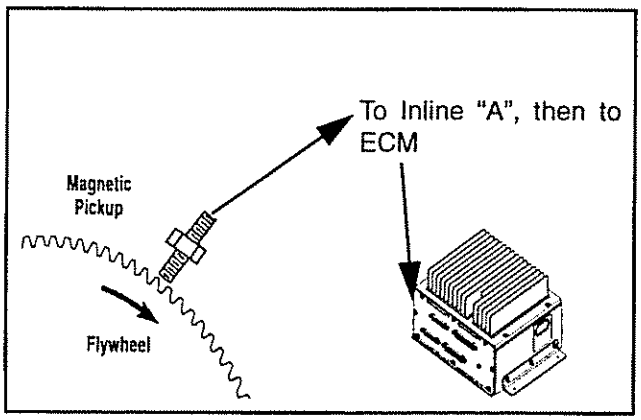

Screw the magnetic pickup in until it contacts the targeted gear tooth. The magnetic pickup will screw in very easily; do not use excessive pressure.

NOTE: *If the magnetic pickup does not turn with finger pressure, check the hole and magnetic pickup threads. Chase threads with a tap if necessary. Using a magnet, remove any chips created by the tap.*

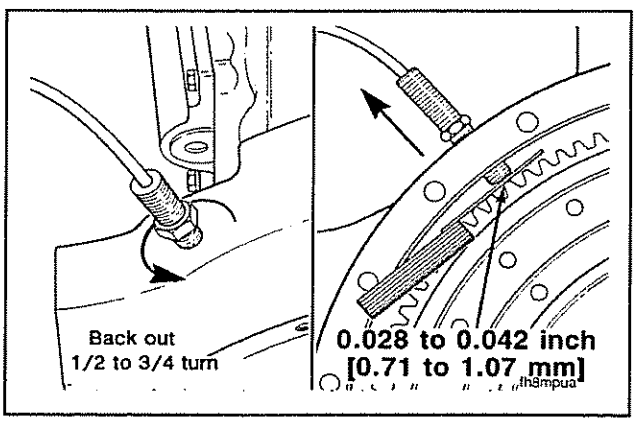

Back the magnetic pickup out (counterclockwise) 1/2 to 3/4 turn.

If a feeler gauge can be inserted between the magnetic pickup and the flywheel ring gear tooth, back the magnetic pickup out 0.71 to 1.07 mm [0.028 to 0.042 in.] from the gear tooth.

Tighten the jam nut on the flywheel housing. While holding the magnetic pickup, torque the jam nut to 34-47 N·m [25-35 ft-lb].

⚠ CAUTION ⚠

Jam nut over-torque will damage the magnetic pickup.

When a ring gear tooth passes the magnetic pickup, an AC voltage is induced producing the speed signal for the ECM. One cycle is induced for each gear tooth.

The speed sensor is connected to the ECM speed sensor signal and return pins via extension harness Inline connector A. The voltage generated by the speed sensor should be between 2.5 to 50 V_{p-p} under any running condition (cranking or run speeds).

If the magnetic pickup signal is less than 2.5 V_{p-p} when cranking the engine, screw the pickup in (clockwise) 1/8 to 1/4 turn.

NOTE: *One of the two magnetic pickup connectors can be disconnected in order to measure the speed sensor voltage at the sensor. Be sure to re-connect the magnetic pickup connector once all measurements have been completed.*

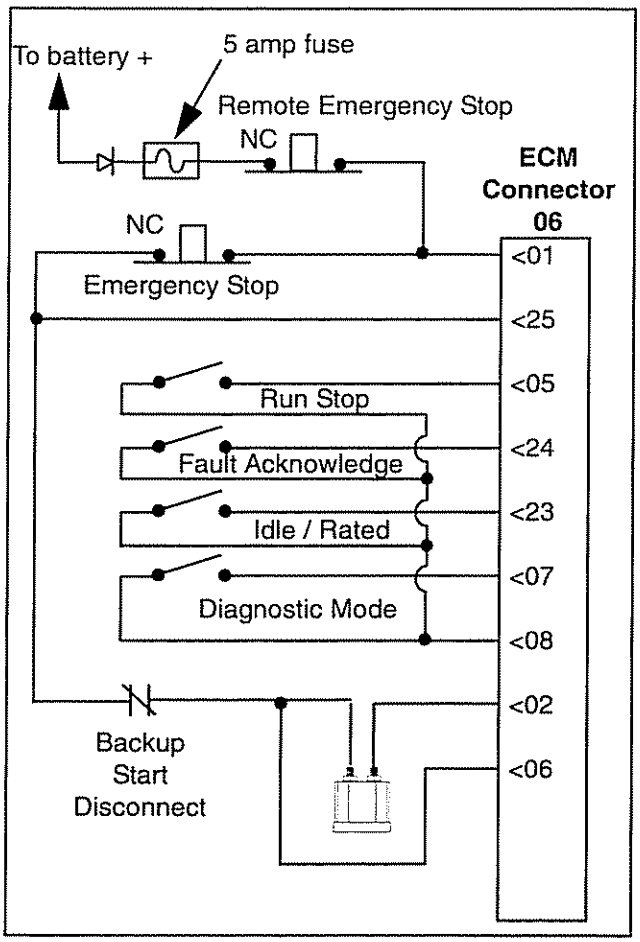

Run/Stop Controls

The information in this section pertains to running or stopping the engine.

Run/Stop

A Run/Stop input is provided to enable starting, running, and stopping the engine.

When used in conjunction with the Crank switch input, when the Run/Stop input is in the "Run" state, the ECM will enable the Starter Control and fueling control for starting and running the engine. See the ***Crank*** feature description on page 47 for further details.

In "Stop" state, the ECM will command the engine to stop running and inhibit starting once the engine has stopped.

To implement this feature, the customer supplies a bi-state signal, to pin 5 of ECM connector 06. Pin 8 of ECM connector 06 is used to supply an electrical signal path to GND through the ECM.

When the switch is set in the position that connects GND to the Run/Stop input, the ECM will enter the "Run" mode (GND = Run). When the switch input is set in the position that opens the circuit connection, disconnecting GND from the Run/Stop input, the ECM enters the "Stop" mode (Open = Stop).

Local Emergency Stop

The Local Emergency Stop, or Local E-Stop, feature is implemented by providing a normally-closed momentary bi-state signal, or switch, connected bewteen pins 1 and 25 of ECM connector 06. This feature provides a means to immediately shutdown the engine during an emergency condition by opening the Local E-Stop switch located at the operator panel, interrupting power to the Fuel Shut-Off Valve and fuel system actuator driver circuits of the ECM through pin 25 of ECM connector 06 (Open = E-Stop).

***NOTE: DO NOT** use the Emergency Stop for normal or routine shutdowns. This switch is for emergency stopping only.*

The engine Run/Stop state can also be controlled electronically using InPower™. This is accomplished by setting the *Run/Stop Command* parameter to the desired state.

NOTE: *The Run/Stop electronic trim setting and switch input are both used by the ECM to determine the operating state of the engine. The electronic trim and switch input must both be set to "Run" in order for the engine to be able to start and run. If either the electronic trim or the switch input, or both, are set to "Stop" the engine will not start or run.*

If the customer prefers using the switch input as the sole means of controlling the engine operating speed, the Run/Stop Command *parameter must be set to "Run" at all times. The* Run/Stop Command *parameter defaults to "Run" on ECM power-up.*

InPower™ Configurable Feature

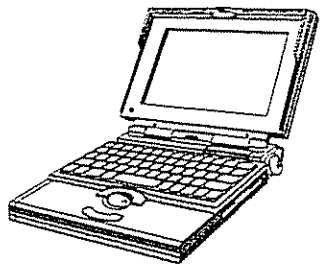

Run/Stop Control

InPower™ Location:

Monitor
Control
Starting / Stopping
Run/Stop Command

Remote Emergency Stop

Similar to the Local E-Stop switch, the Remote E-Stop feature is implemented by providing a normally-closed momentary bi-state signal, or switch, to pin 1 of ECM connector 06. This feature provides a means to immediately shutdown the engine during an emergency condition by opening the Remote E-Stop switch located at a location remote from the operator panel, interrupting power to the Fuel Shut-Off Valve and fuel system actuator driver circuits of the ECM through pin 25 of ECM connector 06 (Open = E-Stop).

The engine can also be electronically shutdown using the InPower™ service tool. This is accomplished by setting the *Remote E-Stop Command* parameter to "Stop".

Remote Emergency Stop

InPower™ Location:

Monitor
Control
Starting / Stopping
Remote E-Stop Command

⚠ WARNING ⚠

The electronic shutdown Remote E-Stop Command does not cause battery power to be physically disconnected from the ECM Fuel Shut-Off Valve and fuel system actuator driver circuits. If application requirements for the generator set dictate that emergency stopping of the engine must absolutely prevent operation of such fueling control circuits, the hard-wired Emergency Stop inputs must be used.

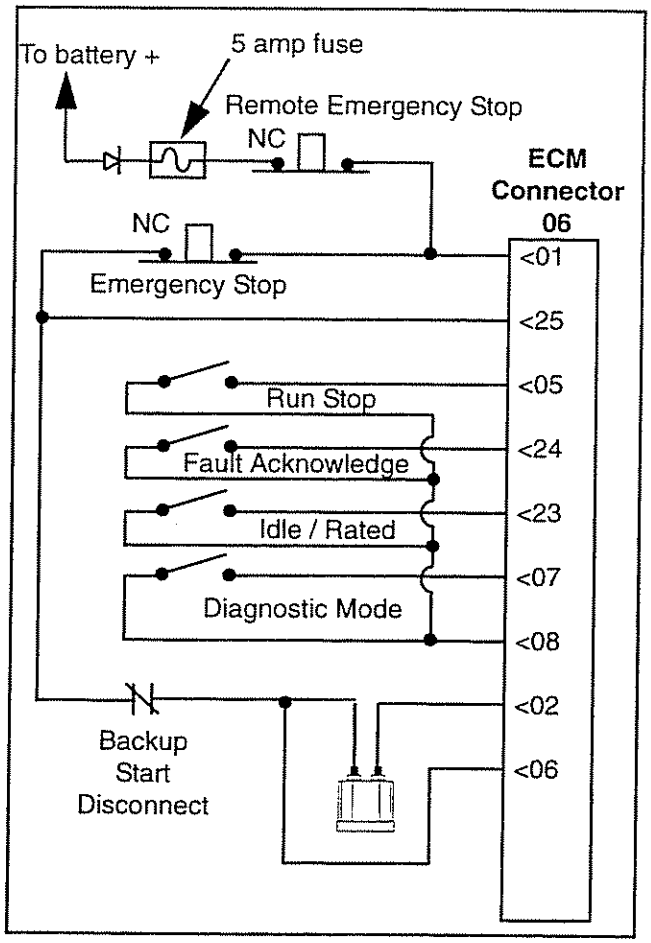

Starter Control

The Starter Control feature provides the means to control the engine starter solenoid and the cranking routine during engine start-up. The Starter Control cranking routine is initated based on the state of the Crank and Run/Stop switch inputs. See pages 44 and 47 describing the ***Run/Stop*** and ***Crank*** features for further details.

Following is an operational description of the GCS Starter Control feature. This description assumes that the starting circuit is connected as shown in the respective wiring schematics on pages 31, 39 and 41, and that the Emergency Stop inputs and Backup Start Disconnect are connected as shown at the left.

The Run/Stop switch must be placed in the "Run" state and the Crank Relay coil high side must be connected to Battery (+) (i.e. the Local E-Stop, Remote E-Stop and Backup Start Disconnect switches are all closed).

Engine cranking is initiated by holding the Crank switch in the "Crank" state. The Crank Coil relay driver will immediately activate the Crank Relay driver output at pin 2 of ECM connector 06, providing a signal path to GND, which energizes the Crank Relay coil. The Crank Relay will then provide power to the Crank Slave Relay (or magnetic switch) coil closing the Crank Slave Relay contacts, which in turn will supply power to the starter motor switch, causing the starter motor to engage and to begin cranking the engine.

Once the engine speed has reached a pre-programmed starter disconnect speed, the Crank Relay coil driver will open, de-energizing the Crank Relay. In turn, the Crank Slave Relay will de-energize and the starter will disengage as the engine speed continues to ramp-up to either the idle or rated speed depending upon the state of the Idle/Rated switch input. See the ***Idle/Rated Speed*** feature description on page 49 for further details.

> ***NOTE:*** *Use of the GCS Starter Control feature is not required in order to start and run the engine. If a customer supplied starting system is used, the Run/Stop switch must still be placed in the "Run" state in order to start and run the engine.*

Crank

A Crank switch input is provided to command the ECM to initiate the crank sequence to start the engine, as explained in the previous section.

To implement this feature, the customer supplies a bi-state (normally open) signal, or switch, to pin 3 of ECM connector 03. Pin 16 of ECM connector 03 is used to provide an electrical signal path to GND through the ECM. The Crank swich input must be enabled, using InPower™, to make this feature operational. This is accomplished by setting the *Crank Switch Enable* parameter to "Enabled".

When the switch is set in the position that connects GND to the Crank input, the input is in the "Crank" state (GND = Crank).

When the switch is set in the position that opens the circuit connection, disconnecting GND from the Crank input, the input is in the "Not Crank" state (Open = Not Crank).

When the Crank switch input transitions from the "Not Crank" state to the "Crank" state while the engine is not yet running, and the Run/Stop switch is in the "Run" state, the ECM will initiate the cycle/continuous crank sequence. See the ***Cycle/Continuous Cranking*** section following for further details.

There is no effect on engine operation when the Crank switch input transitions from the "Crank" state to the "Not Crank" state once the engine has already started. If this switch transition occurs prior to the engine starting after the crank sequence has been initiated the crank sequence will cease immediately.

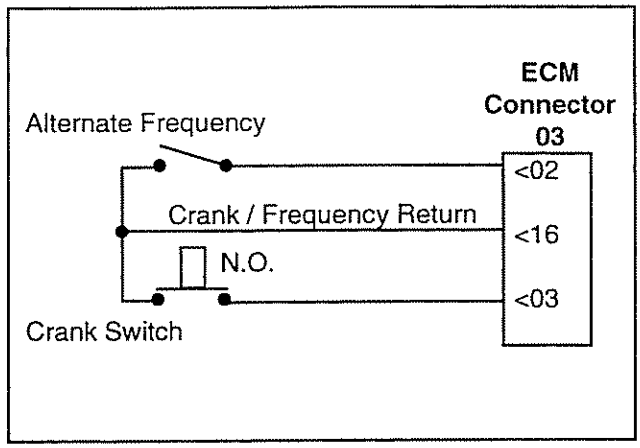

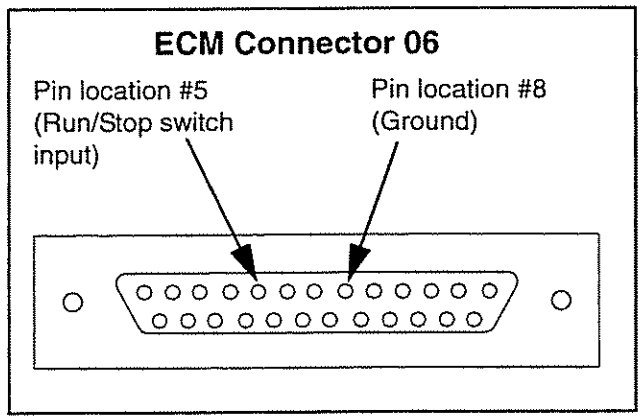

InPower™
Configurable Feature

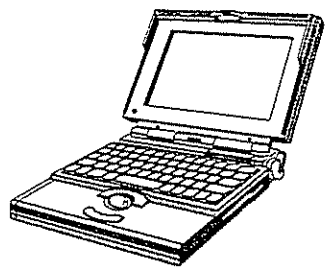

Cycle/Continuous Cranking

The Starter Control feature allows the use of either cycle or continuous cranking routines which are set-up and selected using the InPower™ service tool.

The **Continuous Cranking** routine provides the capability to engage the starter only once for a configurable length of time. The *Continuous Crank Engage Time* parameter allows the user to define how long the starter will crank in an attempt to start the engine.

The **Cycle Cranking** routine provides the capability to perform a maximum of seven starting attempts with configurable starter engage and rest times. The *Cycle Crank Attempts* parameter allows the user to determine how many times the starter will attempt to start the engine. The *Cycle Crank Engage Time* parameter allows the user to define how long the starter will crank during each start attempt. The *Cycle Crank Rest Time* parameter defines how long the starter will wait, or rest, between starting attempts.

Starting Control

InPower™ Location:

Adjustments

Starting

Crank Switch Enable

Cycle / Continuous Crank Select

Continuous Crank Engage Time

Cycle Crank Attempts

Cycle Crank Engage Time

Cycle Crank Rest Time

Speed Ramping

InPower™ Location:

Adjustments

Governor

Idle and Ramping

Starting to Rated Ramp Time

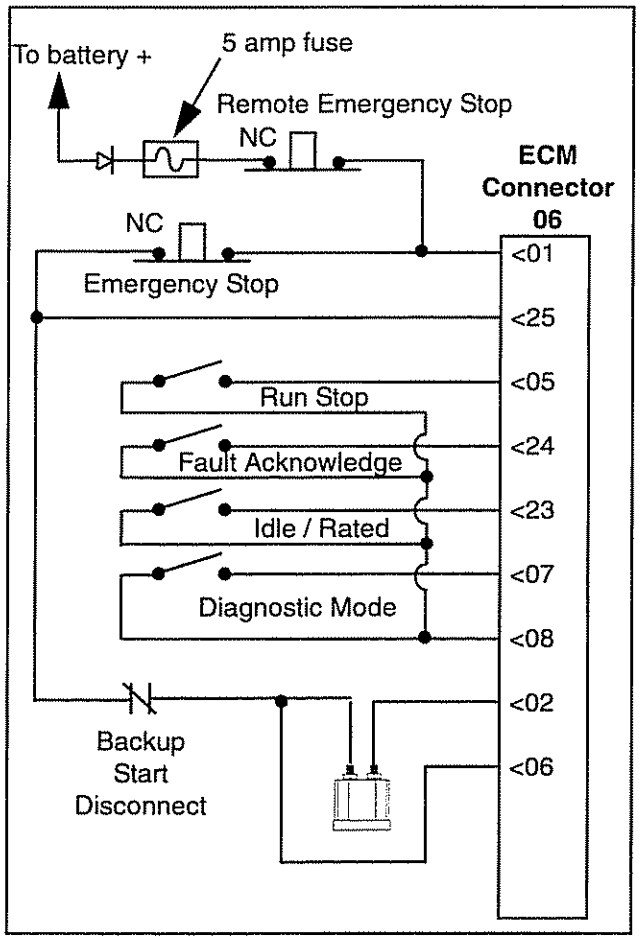

Starting-to-Rated Speed Ramp

During starting with the Idle/Rated Switch Input set to "Rated", the engine will ramp-up (accelerate) to rated speed at the Starting-to-Rated Speed Ramp rate.

If the ramp rate is set at or near 0 seconds, the engine speed will accelerate to achieve rated speed as quickly as possible based on the governor gain settings and the generator set performance. The user can increase or decrease the governor gain using the ***Governor Gain Adjust*** feature described on page 51.

Backup Start Disconnect

The Backup Start Disconnect is implemented by providing a bi-state switched signal, or switch, between pin 25 of ECM connector 06 and the high-side of the Crank Relay coil.

This feature provides a means to manually disengage the starter by removing power to the Crank Relay coil when the Backup Start Disconnect switch located on the operator panel is "open" (Open = Inhibit/Disengage Starter).

This feature is intended to save the starter from damage in case the Starter Control feature does not automatically disengage the starter when the engine reaches the required start disconnect speed. See the ***Starter Control*** feature description on page 46 for further details.

Backup Starting Systems

The GCS Starter Control feature can be implemented for use as either the primary or secondary starting system where backup starting control is required.

> ***NOTE:*** *If the GCS Starter Control feature is used as part of a backup starting system, it is the customer's responsibility to ensure that the GCS Starter Control feature is set-up in the correct manner to avoid interference with the proper function of either of the starting systems.*

Idle/Rated Speed

An Idle/Rated speed input is provided to allow control of the engine speed.

To implement this feature, the customer supplies a bi-state signal, or switch, to pin 23 of ECM connector 06. Pin 8 of ECM connector 06 is used to provide an electrical signal path to GND through the ECM.

When the switch is in the position that connects GND to the Idle/Rated input, the ECM enters the "Idle" speed mode (GND = Idle). Upon transition to the Idle speed mode, the generator set speed will ramp from the current speed to the idle speed. See the ***Rated-to-Idle Speed Ramp*** feature description on page 50 for further details regarding transitions from rated to idle speed.

When the switch input is set in the position that opens the circuit connection, disconnecting GND from the Idle/Rated input, the ECM enters the "Rated" speed mode (Open = Rated). Upon transition to the Rated speed mode, the generator set speed will ramp from the current speed up to the rated speed. See the ***Idle-to-Rated Speed Ramp*** feature description on page 50 for further details regarding transitions from idle to rated speed.

If the Idle/Rated switch input is set to "Rated" prior to starting the engine, the rate at which the engine will ramp-up to rated speed is determined based on the Starting-to-Rated Speed Ramp setting. See the ***Starting-to-Rated Speed Ramp*** feature description on page 48 for further details.

The Idle/Rated speed can also be controlled electronically using InPower™. This is accomplished by setting the *Idle / Rated Command* parameter to the desired state.

> ***NOTE:*** *The Idle/Rated electronic trim setting and switch input are both used by the ECM to determine the operating speed of the engine. The electronic trim and switch input must both be set to "Rated" in order for the engine to operate at rated speed. If either the electronic trim or the switch input, or both, are set to "Idle" the engine will operate at idle speed.*
>
> *If the customer prefers using the switch input as the sole means of controlling the engine operating speed, the* Idle / Rated Command *parameter must be set to "Rated" at all times. The* Idle / Rated Command *parameter defaults to "Rated" on ECM power-up.*

ECM Connector 06

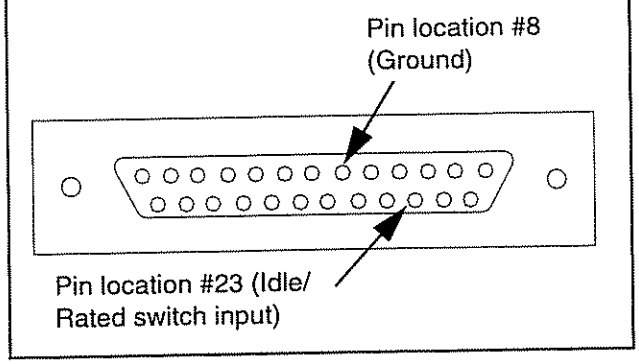

**InPower™
Configurable Feature**

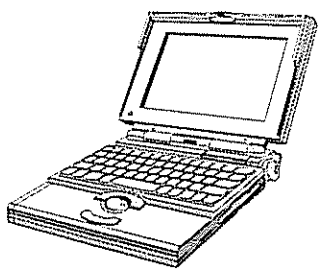

Idle/Rated Speed

InPower™ Location:

Monitor

Control

Starting / Stopping

Idle / Rated Command

InPower™ Configurable Feature



Idle Speed Adjust

InPower™ Location:

Adjustments

Governor

Idle and Ramping

Engine Idle Speed

Idle to Rated Ramp Time

Rated to Idle Ramp Time

Idle Speed Adjust

The engine idle speed can be set between a minimum and maximum limit pre-programmed in the ECM. This is accomplished by setting the *Engine Idle Speed* parameter to the desired idle speed using InPower™.

Idle-to-Rated Speed Ramp

When the engine is at idle speed and the Idle/Rated switch Input state transitions from "Idle" to "Rated", the engine speed will ramp-up (accelerate) to rated speed at the Idle-to-Rated Speed Ramp rate.

If the ramp rate is set at or near 0 seconds, the engine speed will accelerate to achieve rated speed as quickly as possible based on the governor gain settings and the generator set performance. The customer can increase or decrease the governor gain using the ***Governor Gain Adjust*** feature described on page 51.

Rated-to-Idle Speed Ramp

When the engine is at rated speed and the Idle/Rated Switch Input state transitions from "Rated" to "Idle", the engine speed will ramp-down (decelerate) to idle speed at the Rated-to-Idle Speed Ramp rate.

If the ramp rate is set at or near 0 seconds, the engine speed will decelerate to achieve idle speed as quickly as possible based upon the governor gain settings and the generator set performance. The customer can increase or decrease the governor gain using the ***Governor Gain Adjust*** feature described on page 51.

Performance, Frequency and Droop Controls

Governor Gain Adjust

An adjustable signal input is provided to adjust the governor gain. The governor gain is adjustable from 0.05 (least amount of gain) to 10.00 (highest amount of gain).

The customer can implement the Governor Gain Adjust feature by connecting one side of a 5kΩ potentiometer to the analog ground at pin F of the Inline D connector, the other side is connected to pin E of the Inline D connector, and the wiper is also connected to pin E of the Inline D connector.

A potentiometer with a smaller resistance can be used to improve the adjustment sensitivity. Using a smaller resistance potentiometer will also decrease the adjustment range.

This feature can also be implemented by supplying a 0 to 3.177 VDC variable voltage to pin E of the Inline D connector, using pin F of the Inline D connector as a GND reference.

⚠ CAUTION ⚠

When using a variable voltage input, the voltage must not exceed 5 VDC.

The governor gain setting is directly proportional to the potentiometer resistance, or input voltage. As the resistance increases, the gain increases. The amount of gain can be calculated using the formulas shown at the right.

The Inline D connector is located on the Extension Harness. See the ***Wiring Harnesses and Interface Connectors*** section on page 19 for further details about the Extension Harness.

Governor Gain Adjust - Inline D

Pins:

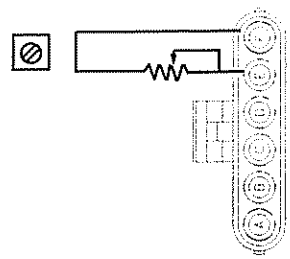

F: Gov Gain Adjust Return
E: Gov Gain Adjust Signal

When using a 5kΩ potentiometer:

$$\text{Gain} = \left[\frac{R_{pot}}{5000\ \Omega} \times 9.95\right] + 0.05$$

OR

When using a potentiometer less than 5kΩ:

$$\text{Gain} = \left[\frac{R_{pot}}{(R_{pot} + 2870\ \Omega)} \times 15.6613\right] + 0.05$$

OR

When using a variable voltage:

$$\text{Gain} = \left[\frac{V_{in}}{3.17662\ V} \times 9.95\right] + 0.05$$

Where:

R_{pot} = Potentiometer Resistance (Ω)
V_{in} = Signal Input Voltage (V)

Examples:

R_{pot} = 2500 Ω (Using a 5kΩ potentiometer)

$$\text{Gain} = \left[\frac{2500\ \Omega}{5000\ \Omega} \times 9.95\right] + 0.05 = 5.025$$

R_{pot} = 1336 Ω (Using a 2kΩ potentiometer)

$$\text{Gain} = \left[\frac{1336\ \Omega}{1336\ \Omega + 2870\ \Omega} \times 15.6613\right] + 0.05 = 5.025$$

V_{in} = 1.58831 V

$$\text{Gain} = \left[\frac{1.58831\ V}{3.17662\ V} \times 9.95\right] + 0.05 = 5.025$$

InPower™ Configurable Feature



The governor gain can also be set by changing a trim value electronically using InPower™. Either the potentiometer or the electronic trim may be used to determine the governor gain, but not both simultaneously.

Governor Gain Adjust

InPower™ Location:

Adjustments
Governor
Gain and Droop
Governor Gain Adjust
Governor Gain Adjust Select

NOTE: *A selection must be set to either "Pot" or "Trim", using InPower™, to tell the ECM whether a potentiometer is being used for this feature, or if the electronic trim governor gain setting is to be used.*

If a potentiometer is used the signal input must also be enabled, using InPower™, after the "Pot" selection is set-up.

Governor Gain Adjust

InPower™ Location:

Adjustments
Features
Inputs
Governor Gain Adjust Pot Enable

⚠ CAUTION ⚠

Improper configuration or adjustment of the Governor Gain feature can cause unstable engine operation. The customer is responsible for performing any necessary system and generator set tests to ensure that this feature has been properly set-up.

Droop Adjust

An adjustable signal input is provided to control the governor speed droop. The speed droop is adjustable from 0 to 10%.

The customer can implement the Droop Adjust feature by connecting one side of a 5kΩ potentiometer to the analog ground at pin 14 of connector 03, the other side connected to pin 24 of connector 03, and the wiper also connected to pin 24 of connector 03.

This feature can also be implemented by supplying a 0 to 3.177 VDC variable voltage to pin 24 of ECM connector 03, using pin 14 of ECM connector 03 as a GND reference.

⚠ CAUTION ⚠

When using a variable voltage input, the voltage must not exceed 5 VDC.

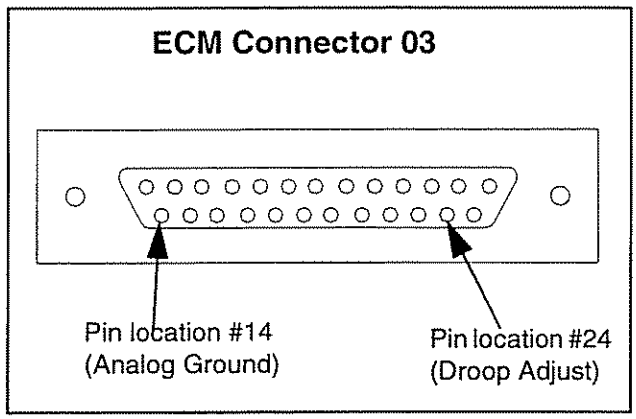

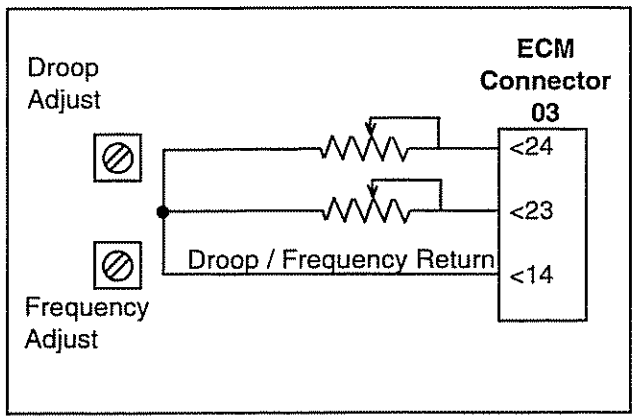

The droop adjust setting is directly proportional to the potentiometer resistance, or input voltage. As the resistance increases, the droop increases. The amount of droop can be calculated using the formula shown at the right.

$$\% \text{ Droop} = \frac{R_{pot}}{5000\ \Omega} \times 10.00\%$$

OR

$$\% \text{ Droop} = \frac{V_{in}}{3.17662\ V} \times 10.00\%$$

Where:

R_{pot} = Potentiometer Resistance (Ω)
V_{in} = Signal Input Voltage (V)

Examples:

$R_{pot} = 2500\ \Omega$

$$\% \text{ Droop} = \frac{2500\ \Omega}{5000\ \Omega} \times 10.00\% = 5.00\%$$

$V_{in} = 1.58831\ V$

$$\% \text{ Droop} = \frac{1.58831\ V}{3.17662\ V} \times 10.00\% = 5.00\%$$

InPower™ Configurable Feature

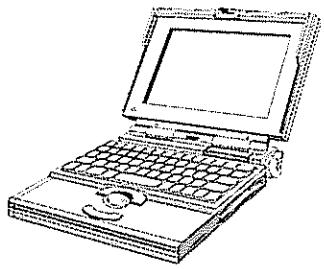

Droop Adjust

InPower™ Location:

Adjustments

Governor

Gain and Droop

Droop Adjust

Droop Adjust Select

Droop Adjust

InPower™ Location:

Adjustments

Features

Inputs

Droop Adjust Pot Enable

The speed droop can also be set by changing a trim value electronically using InPower™. Either the potentiometer or the electronic trim may be used to determine the speed droop, but not both simultaneously.

NOTE: *A selection must be set to either "Pot" or "Trim", using InPower™, to tell the ECM whether a potentiometer is being used for this feature, or if the electronic trim droop setting is to be used.*

If a potentiometer is used, the signal input must also be enabled, using InPower™, after the "Pot" selection is set-up.

⚠ CAUTION ⚠

Improper configuration or adjustment of the Droop feature can cause undesireable engine speed variation. The customer is responsible for performing any necessary system and generator set tests to ensure that this feature has been properly set-up.

Droop engine-generator sets which are to operate at 60Hz full-load, must have the engine no-load governed speed adjusted to:

- 61.8 Hz (1854 RPM) for 3% Speed Droop
- 63.0 Hz (1890 RPM) for 5% Speed Droop

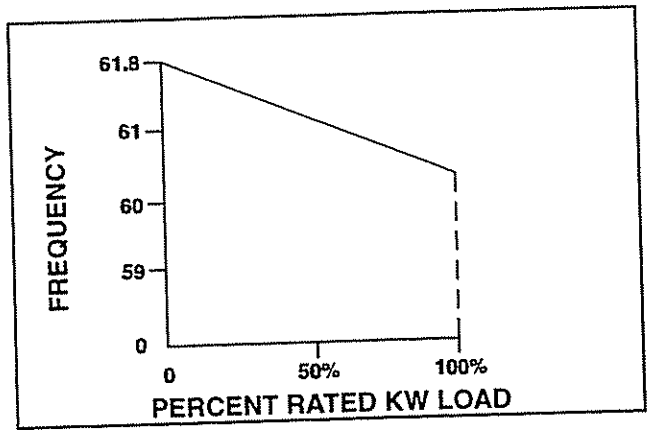

Droop engine-generator sets which are to operate at 50Hz full-load, must have the engine no-load governed speed adjusted to:

- 51.5 Hz (1545 RPM) for 3% Speed Droop
- 52.5 Hz (1575 RPM) for 5% Speed Droop

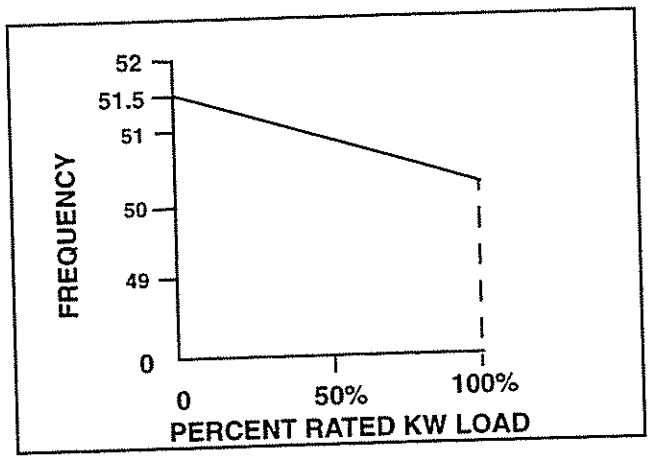

NOTE: *Speed adjustments to obtain desired no-load rated speeds must be made using the* Frequency Adjust *feature (see the Frequency Adjust section on page 56).*

Percent Speed Droop on the engine-generator set can be verified by noting no-load and full-load speeds and using the Speed Droop formula found at right.

When full-load kW is not available, to calculate what the Droop Governed speed should be under the available load, use this formula.

$$S_{al} = S_{nl} - \left(\left(\frac{\text{Available kW Load}}{\text{Rated kW}}\right) \times (S_{nl}-S_{fl})\right)$$

Where:
S_{al} = Speed at Available kW Load
S_{fl} = Speed at Full kW Load
S_{nl} = Speed at No Load

Example:
Available kW Load = 400
Rated kW = 500
Speed at Full kW Load = 1800
Speed at No Load = 1854
$S_{al} = 1854 - \left(\left(\frac{400}{500}\right) \times (1854-1800)\right)$
S_{al} = 1811 RPM

Isochronous Mode

For Isochronous Speed operation, the Droop setting needs to be set at 0%.

The Droop setting can be adjusted using the InPower™ electronic service tool, or a variable analog signal as described in the ***Droop Adjust*** section on page 53.

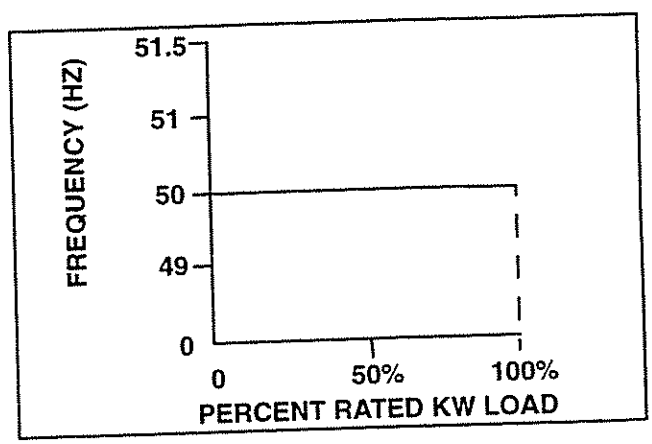

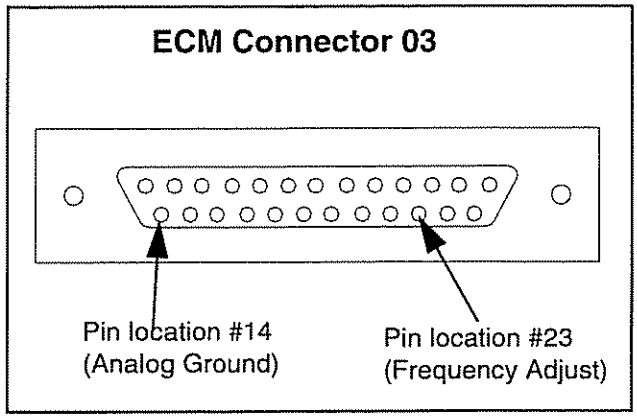

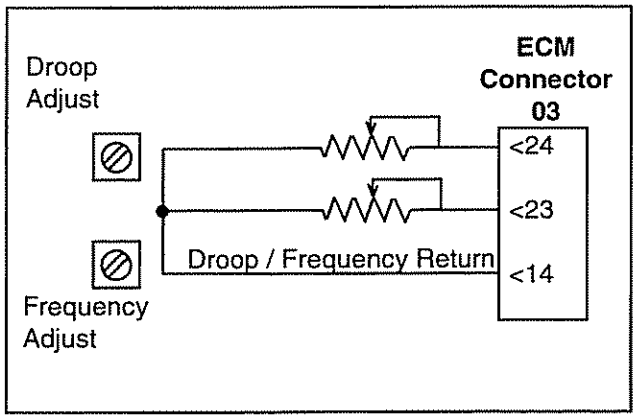

$$\Delta \text{ Frequency} = \left[\frac{R_{pot}}{5000\ \Omega} \times 6\text{Hz}\right] - 3\text{Hz}$$

OR

$$\Delta \text{ Frequency} = \left[\frac{V_{in}}{3.17662\ \text{V}} \times 6\text{Hz}\right] - 3\text{Hz}$$

Where:

R_{pot} = Potentiometer Resistance (Ω)
V_{in} = Signal Input Voltage (V)

Examples:

R_{pot} = 1667 Ω

$$\Delta \text{ Frequency} = \left[\frac{1667\Omega}{5000\ \Omega} \times 6\text{Hz}\right] - 3\text{Hz} = -1\text{Hz}$$

V_{in} = 1.05887 V

$$\Delta \text{ Frequency} = \left[\frac{1.05887\ \text{V}}{3.17662\ \text{V}} \times 6\text{Hz}\right] - 3\text{Hz} = -1\text{Hz}$$

Frequency Adjust

An adjustable signal input is provided to adjust the generator set frequency. The frequency is adjustable within ±9Hz of the rated operating frequency.

The customer can implement the Frequency Adjust feature by connecting one side of a 5 kΩ potentiometer to the analog ground at pin 14 of connector 03, the other side connected to pin 23 of connector 03, and the wiper also connected to pin 23 of connector 03.

This feature can also be implemented by supplying a 0 to 3.177 VDC variable voltage to pin 23 of ECM connector 03, using pin 14 of ECM connector 03 as a GND reference.

⚠ CAUTION ⚠

NOTE: *When using a variable voltage input, the voltage must not exceed 5 VDC.*

The frequency adjust setting is directly proportional to the potentiometer resistance, or input voltage. As the resistance increases, the frequency increases. The amount of frequency change can be calculated using the formula shown at the left.

The governor frequency is adjustable by ±9Hz using a combination of both a remote mounted potentiometer and the frequency adjustment trim which can be set using InPower™.

The potentiometer allows an adjustment range of ±3Hz, while the frequency adjustment trim allows an additional adjustment range of ±6Hz.

NOTE: *The Frequency Adjust feature is different from the Droop Adjust and Governor Gain Adjust features in that both the potentiometer and the electronic trim can be used simultaneously. The effect of the potentiometer setting and the electronic trim setting is additive.*

For example, if the potentiometer were set to provide a +3Hz adjustment and the electronic trim where set to +4Hz, the overall frequency adjustment would be equal to +7Hz. Using another example, if the potentiometer where set to provide a -1Hz adjustment and the electronic trim where set to +6Hz, the overall frequency adjustment would be equal to +5Hz.

If a potentiometer is used, the signal input must be enabled, using InPower™. This is accomplished by setting the Frequency Adjust Pot Enable parameter to "Enabled".

⚠ CAUTION ⚠

Improper configuration or adjustment of the frequency adjust feature can cause the engine to operate at the incorrect speed. The customer is responsible for performing any necessary system and generator set tests to ensure that this feature has been properly set-up.

InPower™
Configurable Feature

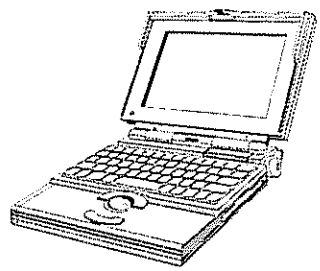

Frequency Adjust

InPower™ Location:

Adjustments
Governor
Frequency
Frequency Adjust

Frequency Adjust

InPower™ Location:

Adjustments
Features
Inputs
Frequency Adjust Pot Enable

Alternate Frequency

An Alternate Frequency input is provided to allow selecting between one of two generator set frequency settings.

To implement this feature, the customer supplies a bi-state signal, or switch, to pin 2 of ECM connector 03. Pin 16 of ECM connector 03 is used to provide an electrical signal path to GND through the ECM.

NOTE: *The alternate frequency selection feature is only enabled for engines that have been rated for dual speed operation. For engines rated for a single operating speed, the Alternate Frequency input is non-operational and no connection needs to be made to this input.*

When the switch is set in the position that opens the circuit connection, disconnecting GND from the Alternate Frequency input, and the engine is not running, the ECM will transition to the "Primary" (or "Normal') frequency setting (Open = Primary/Normal). Upon engine start-up, and after being commanded to run at "rated" speed, the engine speed will ramp-up to the speed specified for the Primary frequency setting.

When the switch is set in the position that connects GND to the Alternate Frequency input, and the engine is not running, the ECM will transition to the "Secondary" (or "Alternate") frequency setting (GND = Secondary/Alternate). Upon engine start-up, and after being commanded to run at "rated" speed, the engine speed will ramp-up to the speed specified for the Secondary frequency setting.

NOTE: *If the frequency selection using the Alternate Frequency input changes while the engine is running, the selected frequency setting will not take effect until after the engine is shut down and re-started.*

The frequency settings for the Primary/Secondary states of the Alternate Frequency input can be reversed (e.g. Primary = 50Hz / Secondary = 60Hz changed to Primary = 60Hz / Secondary = 50Hz) using InPower™. This is accomplished by setting the *Alternate Frequency Select* parameter to either "60Hz Primary" or "50Hz Primary".

The Alternate Frequency setting can also be controlled electronically using InPower™. This is accomplished by setting the *Alternate Frequency Select* parameter to either "60Hz Only" or "50Hz Only". These settings effectively disable the Alternate Frequency switch input, by overriding the switch setting.

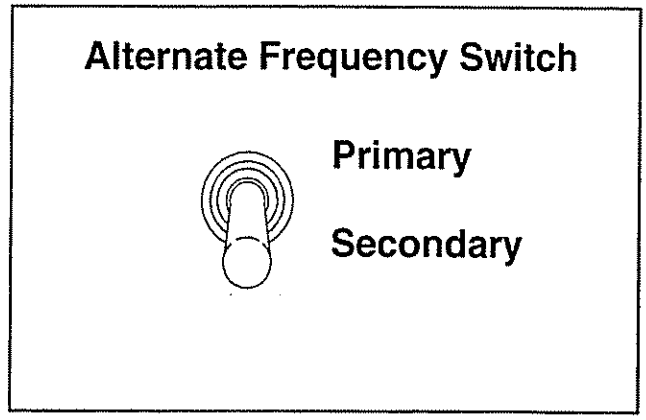

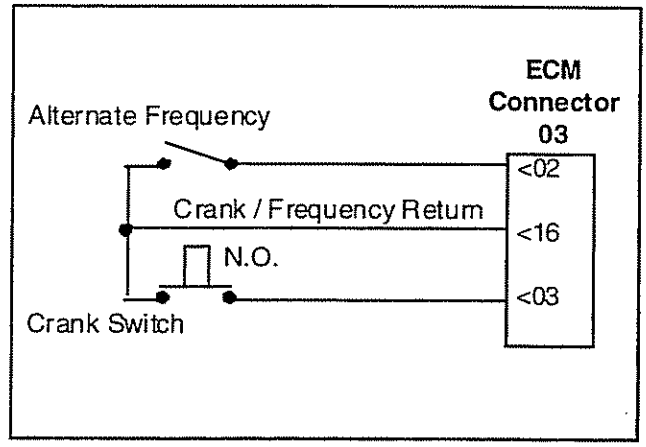

InPower™
Configurable Feature

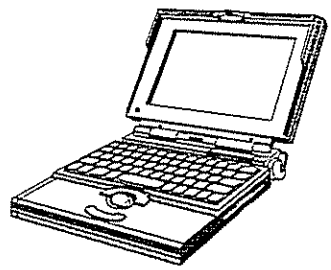

Alternate Frequency

InPower™ Location:

Adjustments

Governor

Frequency

Alternate Frequency Select

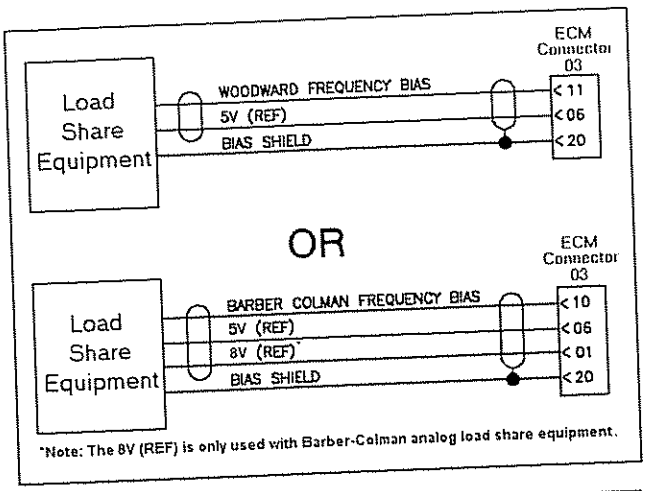

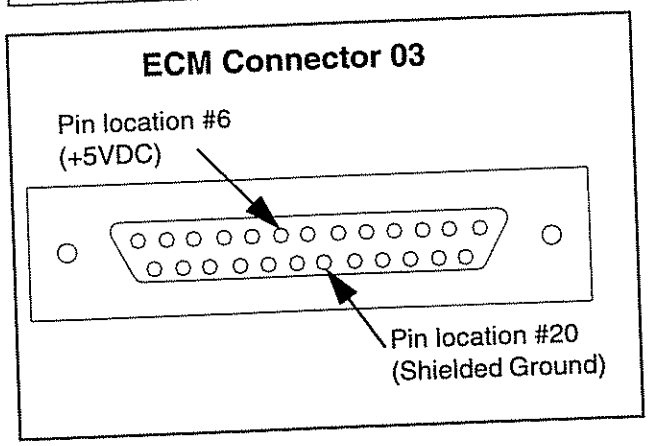

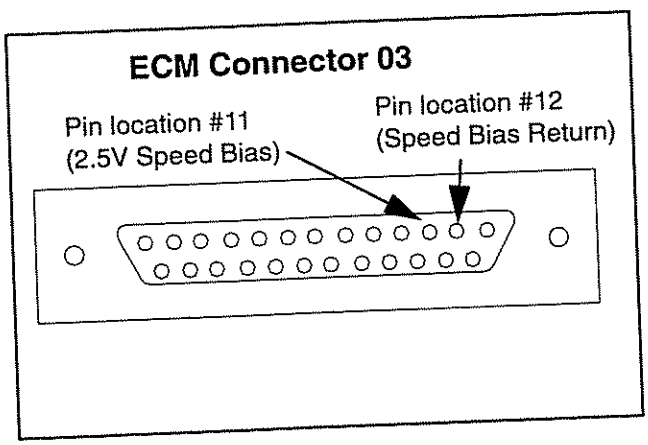

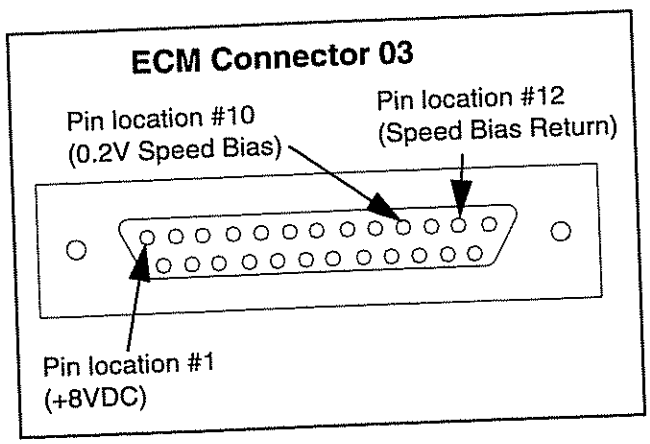

Load Sharing / Autosynchronization

The ECM provides two types of speed bias inputs making it compatible for use with off-the-shelf isochronous load share and synchronizing equipment (i.e. Woodward and Barber-Colman speed governing and load sharing controls).

NOTE: *The speed bias signal and the signal return conductors must be protected from EMI by a common shield. One end of the shield must be attached to GND and the other end must be left open-ended (not attached to GND). The open-end of the shield must terminate as close as possible to the connector of the interfacing device. To accommodate grounding the shield at the ECM end of the interface a shield ground is provided at ECM connector 03, pin 20. It is highly recommended that the shield be terminated at the ECM, which provides a common low impedance shield ground point.*

The ECM provides a +5VDC (±2%) supply voltage at pin 6 of connector 03. This supply voltage is to be used as the signal reference for both the ±2.5V and ±0.2V speed bias signals. The supply is rated to provide the specified voltage at 50mV$_{p-p}$ max. ripple voltage, and 25mA max. current.

±2.5V Speed Bias

A ±2.5V speed bias signal input is provided for interfacing with Woodward and Woodward compatible speed governing and load share controls. The ±2.5V speed bias signal represents a full scale speed bias control range of ±3Hz.

The customer can implement this feature by supplying a speed bias signal to pin 11 of connector 03. Pin 12 of connector 03 is to be used as the speed bias signal return.

±0.2V Speed Bias

A ±0.2V signal input is provided for interfacing with Barber-Colman and Barber-Colman compatible speed governing and load share controls. The ±0.2V speed bias signal represents a full scale speed bias control range of ±7.38Hz.

The customer can implement this feature by supplying a speed bias signal to pin 10 of connector 03. Pin 12 of connector 03 is to be used as the speed bias signal return.

In addition to the +5VDC reference supply voltage, the ECM also provides a +8VDC (±5%) power supply at pin 1 of connector 03. This supply voltage is provided as a means to power the electronic circuits on analog load share equipment. The supply is rated to provide the specified voltage at $50mV_{p-p}$ max. ripple voltage, and 15 mA max. current.

Speed Bias Input Type

The type of speed bias input to be used is selected, using InPower™. This is accomplished by setting the *Frequency Bias Select* parameter to either "Barber Colman" or "Woodward", depending on which speed bias input is being used.

Once the type of speed bias input to be used is selected the speed bias input must be enabled, using InPower™, to make this feature operational. This is accomplished by setting either the *Barber Colman Frequency Bias Enable* parameter or *Woodward Frequency Bias Enable* parameter to "Enabled", depending on which speed bias input is being used.

NOTE: *The Load Sharing / Autosynchronization feature will not operate unless the corresponding speed bias input is enabled, and the type of speed bias selected is the same as the speed bias input being used.*

If the speed bias input is not used, the Frequency Bias Select *parameter should be set to "None".*

InPower™ Configurable Feature



Load Sharing / Autosynchronization

InPower™ Location:

Adjustments

Features

Inputs

Frequency Bias Select

Barber Colman Frequency Bias Enable

Woodward Frequency Bias Enable

Engine-Generator Sets in Parallel

Make necessary point-to-point connections as schematically shown in the Woodward and Barber-Colman wiring diagrams shown on the following pages.

Change the Speed Bias Input Type to the correct setting using InPower™. Refer to the ***Speed Bias Input Type*** section on page 60 for details about selecting the correct Speed Bias input type.

Barber-Colman DYNA II Analog ILS Generator Sets

(Refer to Barber-Colman Analog diagram on page 65)

DYNA II Auto-Synchronizer

The DYNA II Auto-Synchronizer (P/N DYN2 90200) can be used with the Cummins GCS and DYNA II Analog Isochronous Load Sharing Control to automatically synchronize one generator with another or with a bus. The Auto-Synchronizer eliminates the risk of operator error inherent with manual synchronizing.

The figure illustrates the wiring of two engine generator sets having Cummins GCS, DYNA II Analog Isochronous Load Sharing controls and DYNA II Auto-Synchronizers. Additional engine generator sets can be paralleled by wiring them at the point designated, PARALLELING LINES TO OTHER SYSTEMS.

NOTE: The Cummins GCS provides independent overspeed protection for each individual engine control system.

Note For Auto-Synchronizer

1. a. Closing a contact between 12 and 13 allows the Auto-Synchronizer to perform as a speed matching unit. The speed and phase of the incoming generator are controlled and a contact is closed to drive a circuit breaker. Once the circuit breaker is closed the contact between 12 and 13 should be opened. Another method would be to use the "Output Hold" dip switch, SW1, on the front of the unit.

   b. Open contacts or no jumper between 12 and 13 allows the Auto-Synchronizer to still sense any error, but it does not provide any control or contact closure.

2. Phasing of voltage potential to the Auto-Synchronizer is necessary to keep each signal in its correct phase relationship. If the generator voltage is not the same as the voltage rating of the Auto-Synchronizer, step-down transformers are required. The step-down transformers require a nominal 7 VA/PHASE for the Generator input and 2 VA/PHASE for the Bus input.

3. Connections to terminals 1-3 or 2-3 and 4-6 or 5-6 of the Auto Synchronizer must be the same voltage potential. Applying generator voltage without applying bus voltage may cause the engine to run faster or slower than the desired speed. However, when bus voltage is applied, the Auto-Synchronizer will change engine speed to quickly match the generator to the bus frequency.

Notes for Isochronous Load Sharing Module

4. Select the ILS current transformers to provide 2.5 to 5.0 amperes at full rated load. Current transformers require nominal 12.5 VA/PHASE at 5.0 amperes.

5. Step-down potential transformers require a nominal 6 VA/PHASE for the ILS.

6. Observe current and potential transformer markings when wiring system because it is necessary to keep each signal in its correct phase relationship to each other.

7. If the "load pulse" function is not being used, set the "load pulse" potentiometer fully counterclockwise.

8. The Droop-isochronous switch is not required if the system is always operated in the isochronous mode.

9. The GCS ECM has a built in adjustable ramp. **DO NOT** use the ramp built in the analog ILS.

10. When neither terminal 17 or 18 are wired externally, jumper terminal 18 to ILS terminal 15.

General System Notes

11. Run/Stop switch rating: 100 mA @ 24VDC.

12. System battery supply. If more than one engine is started using the same battery supply, use a separate battery supply for the governor system.

13. If each generator has a separate power supply, connect the negative of all power supplies together for a common reference.

14. Use shielded and twisted leads as shown.

15. Customer supplied ground/open signal for Run/Stop input is at ECM Connector 06, pin 5. The ground signal return for this input is at ECM Connector 06, pin 8.

16. To help avoid possible noise induced instabilities, it is recommended the customer use the customer supplied GCS ECM remote speed adjust pot feature and avoid utilizing a DYNA II Analog ILS remote speed selector rheostat.

17. Battery voltage B+ is applied to the ECM via the Cummins supplied connector Inline E, pin B. Battery ground is terminated at the ECM via the Cummins supplied connector Inline E, pin A.

THIS PAGE INTENTIONALLY BLANK

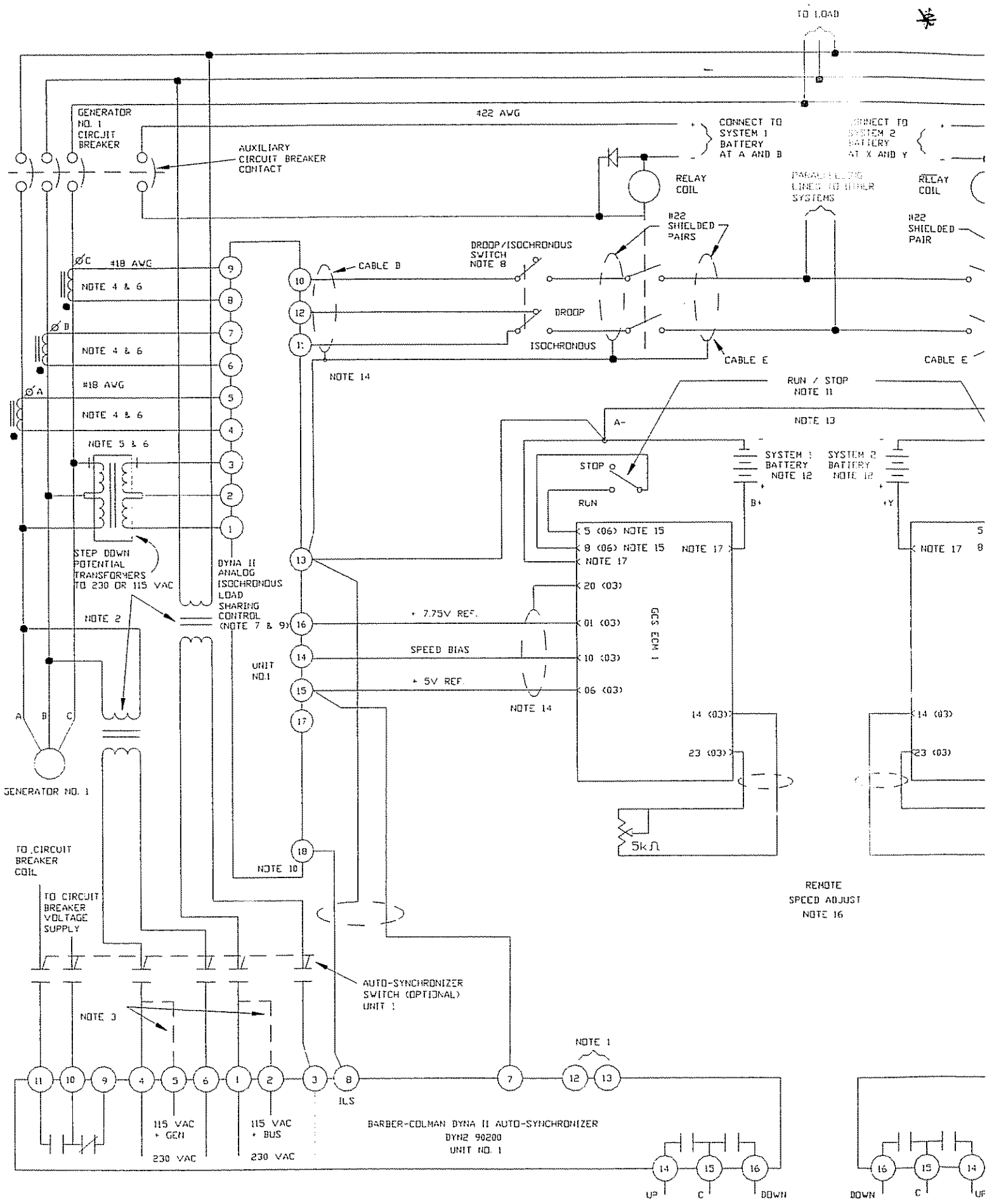
TO LOAD
GENERATOR NO. 1 CIRCUIT BREAKER
#22 AWG
AUXILIARY CIRCUIT BREAKER CONTACT
CONNECT TO SYSTEM 1 BATTERY AT A AND B
CONNECT TO SYSTEM 2 BATTERY AT X AND Y
RELAY COIL
PARALLELING LINES TO OTHER SYSTEMS
RELAY COIL
#22 SHIELDED PAIRS
#22 SHIELDED PAIR
DROOP/ISOCHRONOUS SWITCH NOTE 8
CABLE B
DROOP
ISOCHRONOUS
CABLE E
CABLE E
NOTE 14
RUN / STOP NOTE 11
NOTE 13
A-
STOP
RUN
SYSTEM 1 BATTERY NOTE 12
SYSTEM 2 BATTERY NOTE 12
B+
+Y
ØC #18 AWG
NOTE 4 & 6
ØB
NOTE 4 & 6
ØA #18 AWG
NOTE 4 & 6
NOTE 5 & 6
STEP DOWN POTENTIAL TRANSFORMERS TO 230 OR 115 VAC
NOTE 2
DYNA II ANALOG ISOCHRONOUS LOAD SHARING CONTROL (NOTE 7 & 9)
UNIT NO.1
+ 7.75V REF.
SPEED BIAS
+ 5V REF.
NOTE 14
5 (06) NOTE 15
8 (06) NOTE 15
NOTE 17
NOTE 17
NOTE 17
20 (03)
01 (03)
10 (03)
06 (03)
GCS ECM 1
14 (03)
23 (03)
5kΩ
NOTE 17
14 (03)
23 (03)
A B C
GENERATOR NO. 1
TO CIRCUIT BREAKER COIL
TO CIRCUIT BREAKER VOLTAGE SUPPLY
NOTE 10
REMOTE SPEED ADJUST NOTE 16
AUTO-SYNCHRONIZER SWITCH (OPTIONAL) UNIT 1
NOTE 3
NOTE 1
11 10 9 4 5 6 1 2 3 8 7 12 13
ILS
115 VAC + GEN
230 VAC
115 VAC + BUS
230 VAC
BARBER-COLMAN DYNA II AUTO-SYNCHRONIZER
DYN2 90200
UNIT NO. 1
14 15 16
UP C DOWN
16 15 14
DOWN C UP

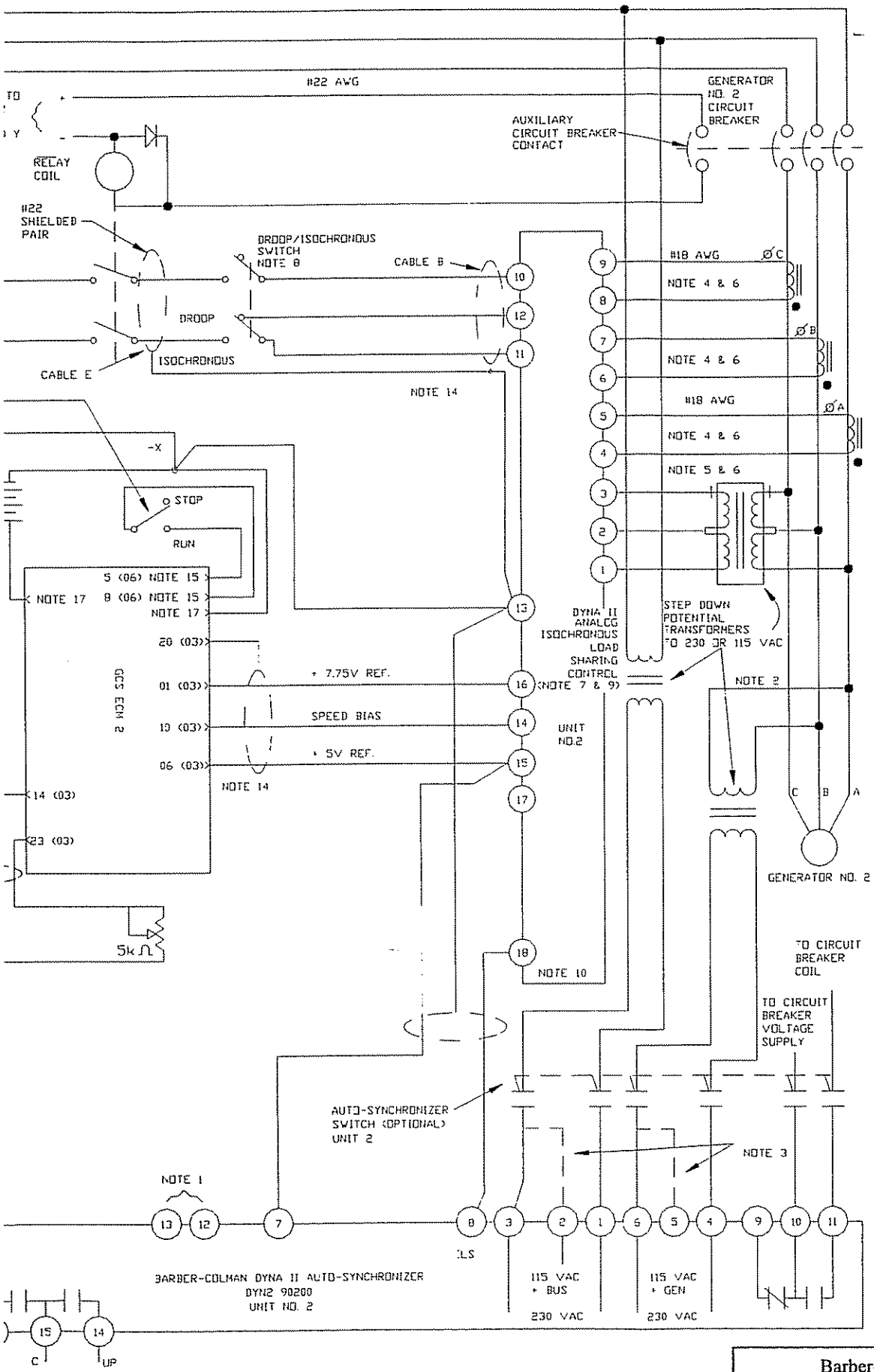

Barber-Colman Analog Wiring Diagram.

QSX15, QSK45, QSK 60 Generator Drive Control System
Page 65

Barber-Colman DYNA II Digital ILS Generator Sets

(Refer to Barber-Colman Digital Diagram on page 69)

DYNA II Auto-Synchronizer

The DYNA II Auto-Synchronizer (P/N DYN2 90200) can be used with the Cummins GCS and DYNA II Digital Isochronous Load Sharing Control to automatically synchronize one generator with another or with a bus. The Auto-Synchronizer eliminates the risk of operator error inherent with manual synchronizing.

The figure illustrates the wiring of two engine generator sets having Cummins GCS, DYNA II Digital Isochronous Load Sharing Controls, and DYNA II Auto-Synchronizers. Additional engine generator sets can be paralleled by wiring them at the point designated, PARALLELING LINES TO OTHER SYSTEMS.

NOTE: The Cummins GCS provides independent overspeed protection for each individual engine control system.

Notes For Auto-Synchronizer

1. a. Closing a contact between 12 and 13 allows the Auto-Synchronizer to perform as a speed matching unit. The speed and phase of the incoming generator are controlled and a contact is closed to drive a circuit breaker. Once the circuit breaker is closed the contact between 12 and 13 should be opened. Another method would be to use the "Output Hold" dip switch, SW1, on the front of the unit.

   b. Open contacts or no jumper between 12 and 13 allows the Auto-Synchronizer to still sense any error, but it does not provide any control or contact closure.

2. Phasing of voltage potential to the Auto-Synchronizer is necessary to keep each signal in its correct phase relationship. If the generator voltage is not the same as the voltage rating of the Auto-Synchronizer, step-down transformers are required. The step-down transformers require a nominal 7 VA/PHASE for the Generator input and 2 VA/PHASE for the Bus input.

3. Connections to terminals 1-3 or 2-3 and 4-6 or 5-6 of the Auto-Synchronizer must be the same voltage potential. Applying generator voltage without applying bus voltage may cause the engine to run faster or slower than the desired speed. However, when bus voltage is applied, the Auto-synchronizer will change engine speed to quickly match the generator to the bus frequency.

Notes For Isochronous Load Sharing Module

4. Select the ILS current transformers to provide 2.5 to 5.0 amperes at full rated load. Current transformers require nominal 12.5 VA/PHASE at 5.0 amperes.

5. Step-down potential transformers require a nominal 1 VA/PHASE for the ILS.

6. Observe current and potential transformer markings when wiring system because it is necessary to keep each signal in its correct phase relationship to each other.

7. If the "load pulse" function is not being used, set the "load pulse" potentiometer fully counterclockwise.

8. Droop-isochronous switch is not required if the system is always operated in the isochronous mode.

9. The GCS ECM has a built in adjustable ramp. **DO NOT** use the ramp built in the digital ILS.

10. When neither terminal 17 or 18 are wired externally, wire terminal 18 to ILS terminal 15.

General System Notes

11. Run/Stop switch rating: 100mA @ 24VDC.

12. System battery supply. If more than one engine is started using the same battery supply, use a separate battery supply for the governor system.

13. If each generator has a separate power supply, connect the negative of all power supplies together for a common reference.

14. Use shielded and twisted leads as shown.

15. Customer supplied ground/open signal for Run/Stop input is at ECM Connector 06, pin 5. The ground signal return for this input is at ECM Connector 06, pin 8.

16. To help avoid possible noise induced instabilities, it is recommended the customer use the customer supplied GCS ECM remote speed adjust pot feature and avoid utilizing a DYNA II Digital ILS remote speed selector rheostat.

17. Battery voltage B+ is applied to the ECM via the Cummins supplied connector Inline E, pin B. Battery ground is terminated at the ECM via the Cummins supplied connector Inline E, pin A.

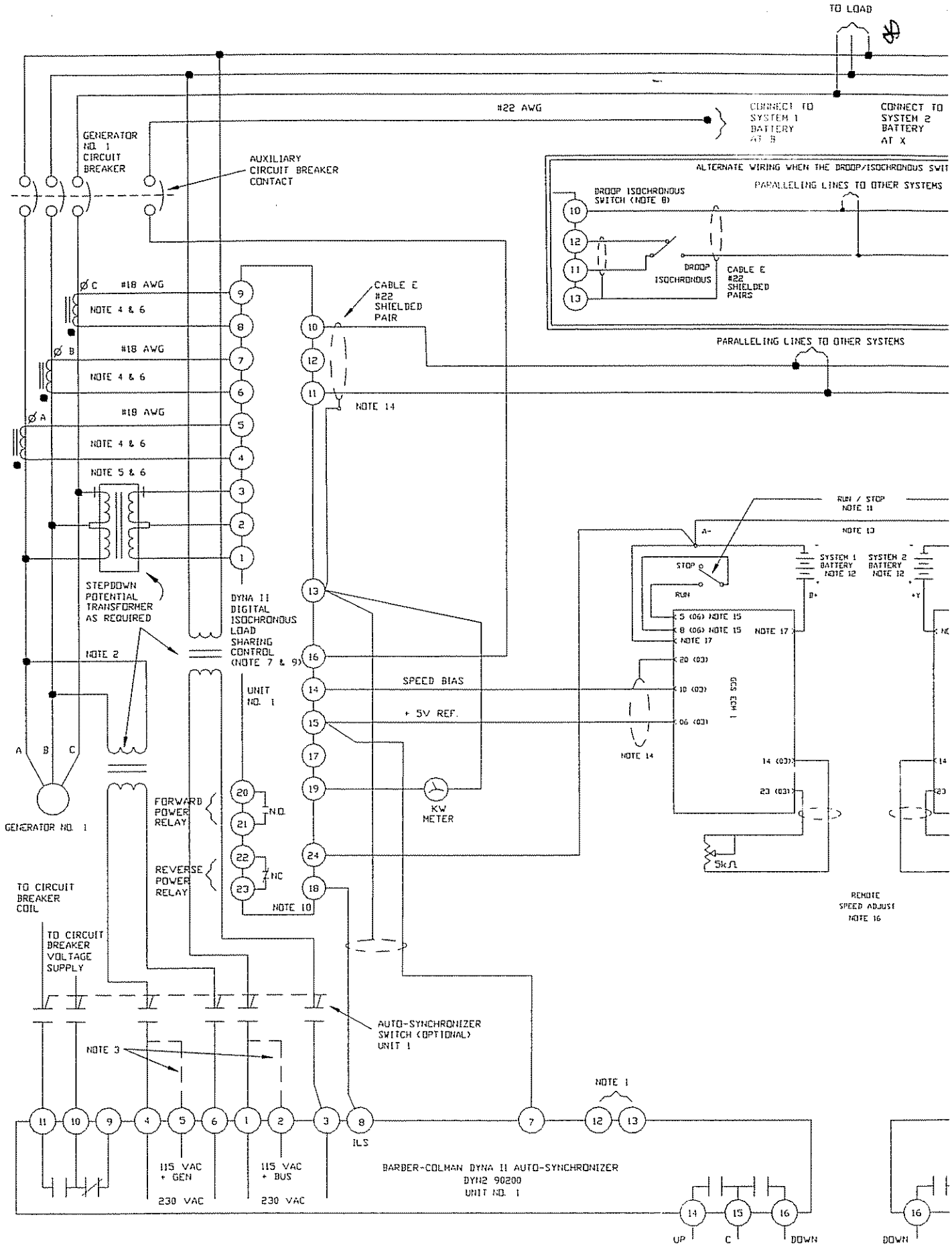
TO LOAD
#22 AWG
CONNECT TO SYSTEM 1 BATTERY AT B
CONNECT TO SYSTEM 2 BATTERY AT X
GENERATOR NO. 1 CIRCUIT BREAKER
AUXILIARY CIRCUIT BREAKER CONTACT
ALTERNATE WIRING WHEN THE DROOP/ISOCHRONOUS SWIT
DROOP ISOCHRONOUS SWITCH (NOTE 8)
PARALLELING LINES TO OTHER SYSTEMS
DROOP
ISOCHRONOUS
CABLE E #22 SHIELDED PAIRS
Ø C #18 AWG
NOTE 4 & 6
Ø B #18 AWG
NOTE 4 & 6
Ø A #18 AWG
NOTE 4 & 6
NOTE 5 & 6
CABLE E #22 SHIELDED PAIR
NOTE 14
PARALLELING LINES TO OTHER SYSTEMS
STEPDOWN POTENTIAL TRANSFORMER AS REQUIRED
NOTE 2
DYNA II DIGITAL ISOCHRONOUS LOAD SHARING CONTROL (NOTE 7 & 9)
UNIT NO. 1
SPEED BIAS
+ 5V REF.
RUN / STOP NOTE 11
NOTE 13
STOP
RUN
SYSTEM 1 BATTERY NOTE 12
SYSTEM 2 BATTERY NOTE 12
NOTE 17
NOTE 14
A B C
GENERATOR NO. 1
FORWARD POWER RELAY
N.O.
REVERSE POWER RELAY
N.C.
NOTE 10
KW METER
5kΩ
REMOTE SPEED ADJUST NOTE 16
TO CIRCUIT BREAKER COIL
TO CIRCUIT BREAKER VOLTAGE SUPPLY
AUTO-SYNCHRONIZER SWITCH (OPTIONAL) UNIT 1
NOTE 3
NOTE 1
ILS
115 VAC + GEN
230 VAC
115 VAC + BUS
230 VAC
BARBER-COLMAN DYNA II AUTO-SYNCHRONIZER
DYN2 90200
UNIT NO. 1
UP
C
DOWN
DOWN

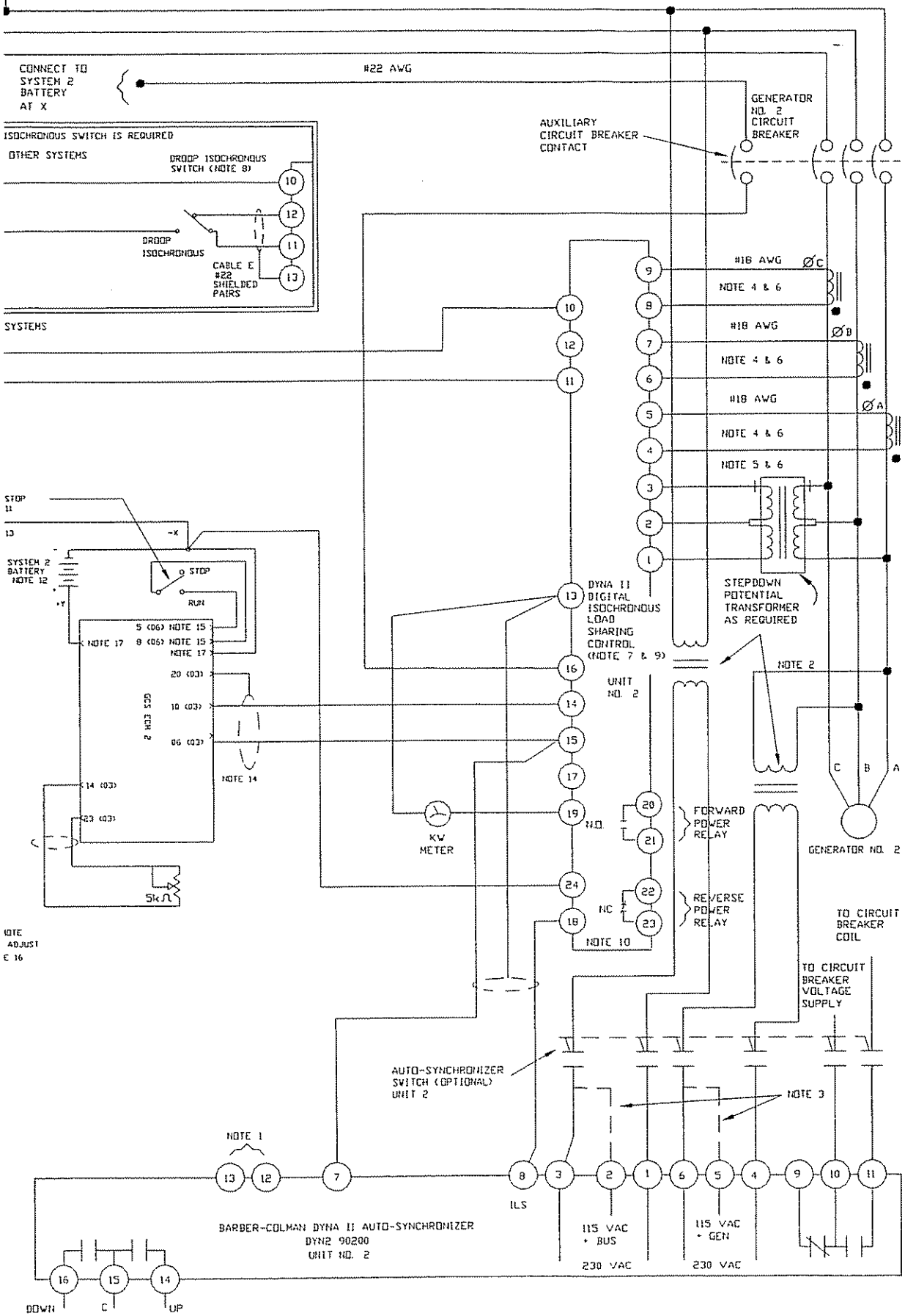

Barber-Colman Digital Wiring Diagram.

QSX15, QSK45, QSK 60 Generator Drive Control System

Page 69

Woodward Analog SPM-A and AGLC Generator Sets

(Refer to Woodward Analog Diagram on page 73)

SPM-A Auto-Synchronizer

The SPM-A Auto-Synchronizer (P/N 9905-01) can be used with the Cummins GCS and the Analog Woodward Load Sensor Control to automatically synchronize one generator with another or with a bus. The SPM-A Synchronizer eliminates the risk of operator error inherent with manual synchronizing.

The figure illustrates the wiring of two engine generator sets having Cummins GCS, Load Sensor and AGLC load sharing controls and SPM-A auto-synchronizers. Additional engine generator sets can be paralleled by wiring them at the point designated, OTHER SYSTEM LOAD
SHARING LINES.

NOTE: The Cummins GCS provides independent overspeed protection for each individual engine control system.

Notes for SPM-A Auto-Synchronizer

1. If the generator or bus voltages are not the same as the rating of the bus or generator sensing inputs, step-down transformers are required.

   Bus sensing step-down transformers (input terminals 6 thruogh 9) must be rated at a minimum of 0.1 VA and generator sensing step-down transformers (input terminals 2 through 5) must be rated at a minimum of 16.3VA/PHASE.

   Jumpers shown are for 115 VAC input. Consult Woodward for 190 to 260 VAC operation.

   Applying generator voltage without applying bus voltage may cause the engine to run faster or slower than the desired speed. However, when bus voltage is applied, the SPM-A will change engine speed to quickly match the generator to the bus frequency.

   NOTE: Minimum generator sensing PT rating allows for power draw of SPM-A, AGLC and Generator Load Sensor.

2. Proper phasing of voltage potential to the bus and generator PT's and SPM-A bus and generator inputs is necessary to keep each signal in its correct phase relationship. Failure to ensure proper phasing could potentially result in out-of-synch paralleling and subsequent hardware damage.

3. Breaker close relay contacts rated at 10 amps resistive and 6 amps inductive at 28 VDC, 3 Amps resistive and 2 amps inductive at 115 VAC, and 1.5 amps resistive and 1.0 amps inductive at 230 VAC.

Notes for Load Sensor and Automatic Load Control (AGLC)

4. Select current transformers to produce 5.0 amperes secondary current at full rated load. Current transformers require at least 0.1VA/PHASE at 5.0 amperes.

5. Observe current transformer markings as it is necessary to keep each signal in its correct phase relationship to each other.

6. Jumper 17 to 18 and 19 to 20 on Load Sensor when potential input terminals 1 through 3 is 95 to 130 VAC phase-to-phase (50 - 400 Hz.). Consult Woodward for 190 to 260 VAC option.

7. Terminals 15 and 16 on Load Sensor shown with jumper for isochronous load sharing. Open terminals 15 and 16 for droop load sharing.

Notes for Load Sensor and Automatic Load Control (AGLC) (Continued)

8. Internal relay de-energizes to state shown when Unload Trip Level is reached on Unload to issue breaker open command. Breaker open relay contact ratings:

	Resistive	Inductive	Motor	Lamp
28VDC	10 Amp	6.0	3.0	1.0
115V, 400 Hz	5 Amp	2.5	3.0	0.8
115V, 60 Hz	3 Amp	2.0	1.5	0.5

9. Jumper 1 to 2 and 3 to 4 on AGLC for potential inputs of 105 to 132 VAC phase-to-phase. Consult Woodward for 210 to 264 VAC option.

General System Notes

10. Run/Stop switch rating: 100mA @ 24VDC.

11. System battery supply. If more than one engine is started using the same battery supply, use a separate battery supply for the governor system.

12. If each generator has a separate power supply, connect the negative of all power supplies together for a common reference.

13. Use shielded and twisted leads as shown.

14. Customer supplied ground/open signal for Run/Stop input is at ECM Connector 06, pin 5. The ground signal return for this input is at ECM Connector 06, pin 8.

15. Battery voltage B+ is applied to the ECM via the Cummins supplied connector Inline E, pin B. Battery ground is terminated at the ECM via the Cummins supplied connector Inline E, pin A.

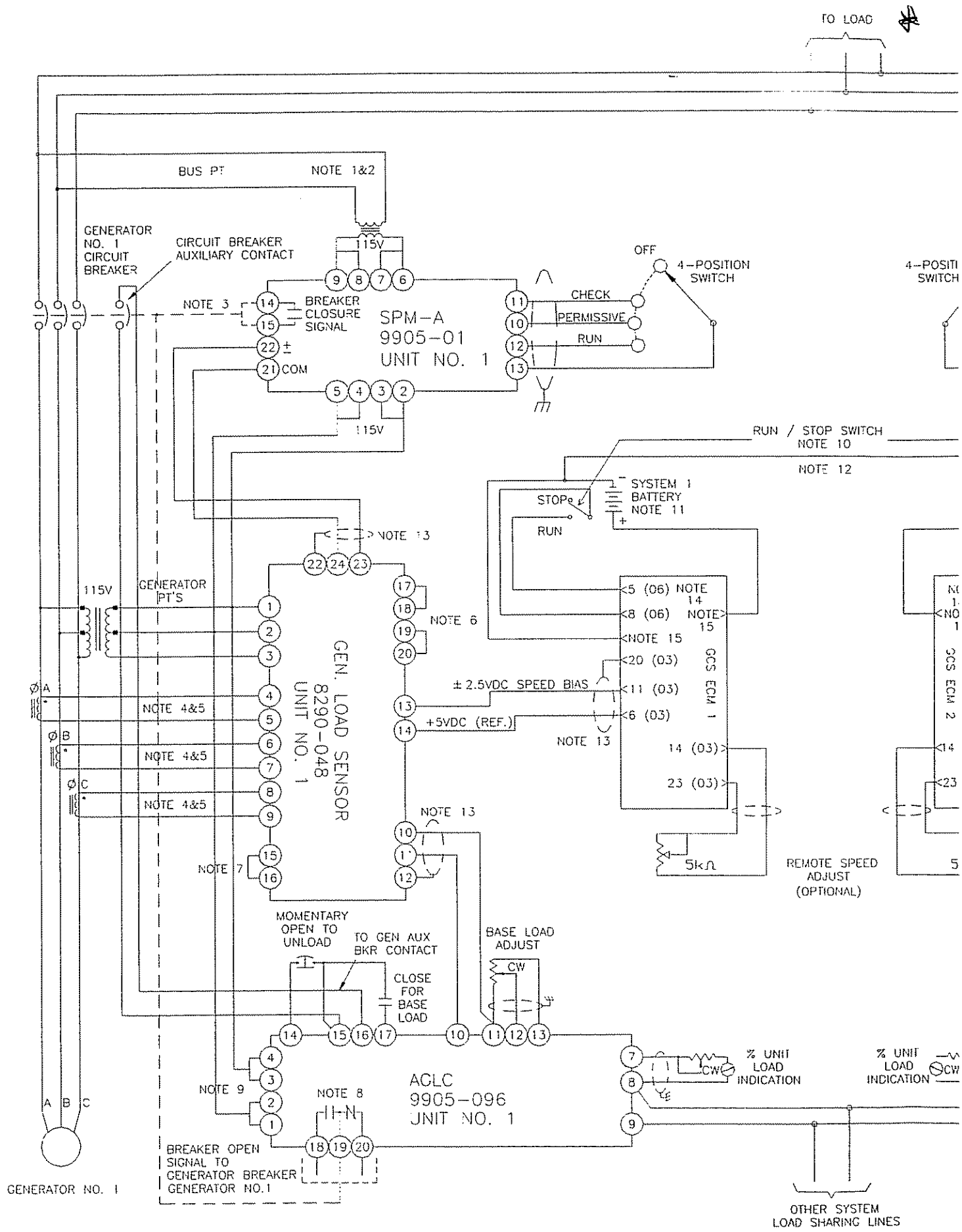
TO LOAD
BUS PT
NOTE 1&2
GENERATOR NO. 1 CIRCUIT BREAKER
CIRCUIT BREAKER AUXILIARY CONTACT
115V
OFF
4-POSITION SWITCH
NOTE 3
BREAKER CLOSURE SIGNAL
SPM-A
9905-01
UNIT NO. 1
CHECK
PERMISSIVE
RUN
COM
RUN / STOP SWITCH
NOTE 10
NOTE 12
SYSTEM 1 BATTERY
NOTE 11
STOP
RUN
NOTE 13
GENERATOR PT'S
NOTE 6
GEN. LOAD SENSOR
8290-048
UNIT NO. 1
NOTE 4&5
NOTE 7
± 2.5VDC SPEED BIAS
+5VDC (REF.)
GCS ECM 1
GCS ECM 2
5kΩ
REMOTE SPEED ADJUST (OPTIONAL)
MOMENTARY OPEN TO UNLOAD
TO GEN AUX BKR CONTACT
CLOSE FOR BASE LOAD
BASE LOAD ADJUST
CW
% UNIT LOAD INDICATION
NOTE 9
NOTE 8
AGLC
9905-096
UNIT NO. 1
BREAKER OPEN SIGNAL TO GENERATOR BREAKER GENERATOR NO.1
GENERATOR NO. 1
OTHER SYSTEM LOAD SHARING LINES

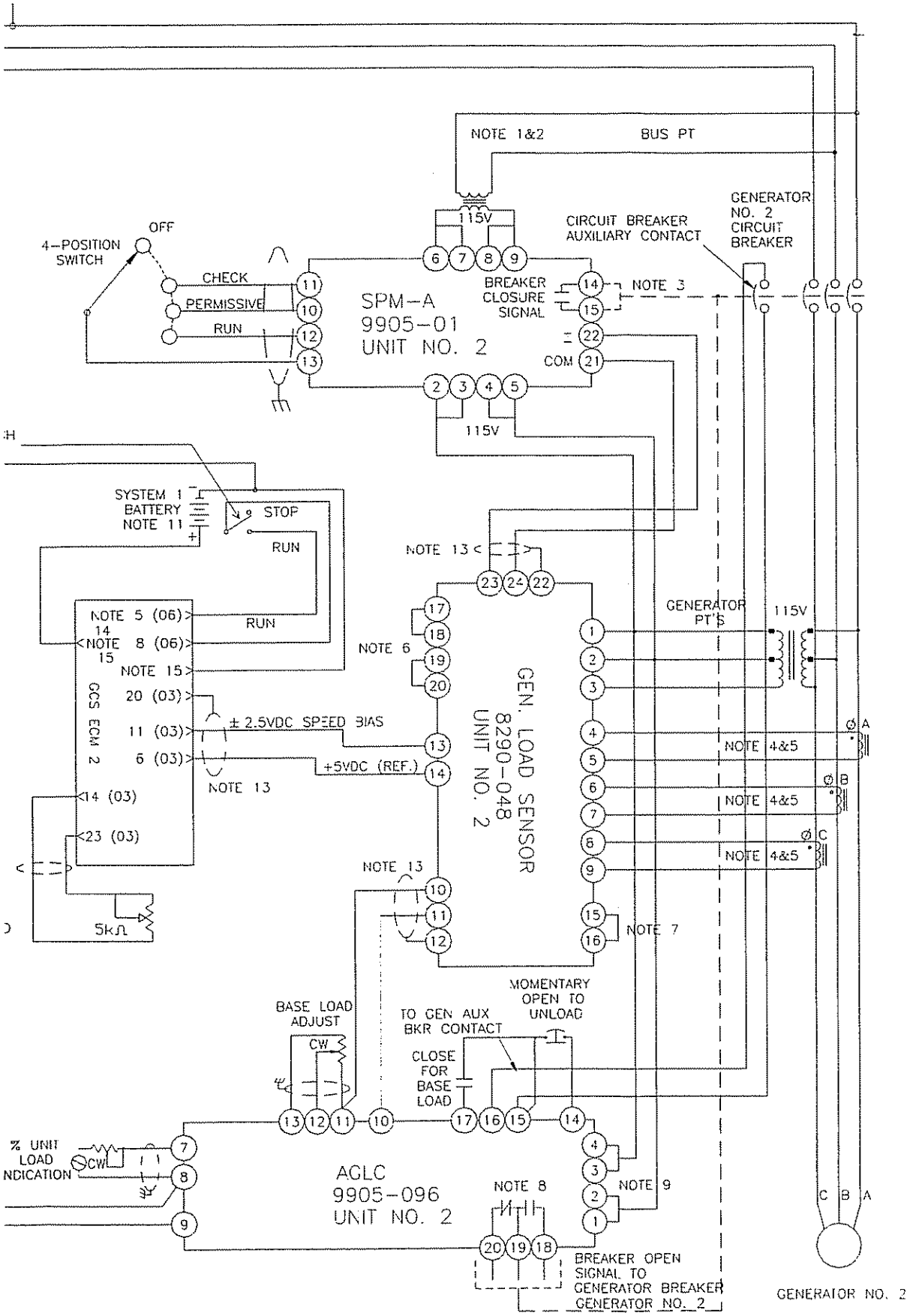

Woodward Analog Wiring Diagram.

QSX15, QSK45, QSK 60 Generator Drive Control System

Page 73

Woodward Digital DSLC Generator Sets

(Refer to Woodward Digital Diagram on page 77)

DSLC (Digital Synchronizer and Load Control)

The Woodward DSLC Synchronizer and Load Controller can be used with the Cummins GCS to automatically synchronize one generator with another or with a bus. The DSLC eliminates the risk of operator error inherent with manual synchronizing. In addition to synchronizing, the DSLC provides load sensing, automatic generator loading / unloading along with isochronous load sharing.

The figure illustrates the wiring of two engine generator sets having Cummins GCS and DSLC Synchronizer and Load Controllers. Additional engine generator sets can be paralleled by wiring them at the point designated, LONWORKS NETWORK TO ALL DIGITAL GENERATOR CONTROLS. The diagram as drawn shows a 120 VAC Wye configuration. Other potential configurations are 240 VAC Wye, 120 VAC and 240 VAC Open Delta configurations. You should consult pertinent Woodward technical manuals for the proper wiring in the case of these other configurations.

NOTE: The Cummins GCS provides independent overspeed protection for each individual engine control system.

Notes for DSLC

1. If the generator voltage is not the same as the rating of the bus or generator voltage sensing inputs (65 - 150 VAC, 45 - 66 Hz.), step-down transformers are required. Bus or generator step-down transformers require at least 0.1 VA/PHASE. Applying generator voltage without applying bus voltage may cause the engine to run faster or slower than the desired speed. However, when bus voltage is applied, the DSLC will change engine speed to quickly match the generator to the bus frequency.

2. Proper phasing of voltage potential to the bus and generator PT's and DSLC bus and generator inputs is necessary to keep each signal in its correct phase relationship. Failure to ensure proper phasing could potentially result in out-of-synch paralleling and subsequent hardware damage.

3. Select current transformers to produce 5.0 amperes secondary current at full rated load. Current transformers require at least .01 VA/PHASE at 5.0 amperes.

4. Observe current transformer markings as it is necessary to keep each signal in its correct phase relationship to each other.

5. Breaker close and open functions may require customer supplied relay. DSLC relay drivers are rated at 18-40 VDC, 200 mA.

6. Required DSLC power supply input is 18 to 40 VDC continuous.

7. Termination jumpers (terminals 41 and 42) are required on units located on each end of LonWorks network.

8. Properly ground the DSLC chassis for proper safety and shielding (Woodward DSLC chassis provides for case grounding stud).

General System Notes

9. Run/Stop switch rating: 100mA @ 24VDC.

10. System battery supply. If more than one engine is started using the same battery supply, use a separate battery supply for the governor system.

11. If each generator has a separate power supply, connect the negative of all power supplies together for a common reference.

12. Use shielded and twisted leads as shown.

13. Customer supplied ground/open signal for Run/Stop input is at ECM Connector 06, pin 5. The ground signal return for this input is at ECM Connector 06, pin 8.

14. Battery voltage B+ is applied to the ECM via the Cummins supplied connector Inline E, pin B. Battery ground is terminated at the ECM via the Cummins supplied connector Inline E, pin A.

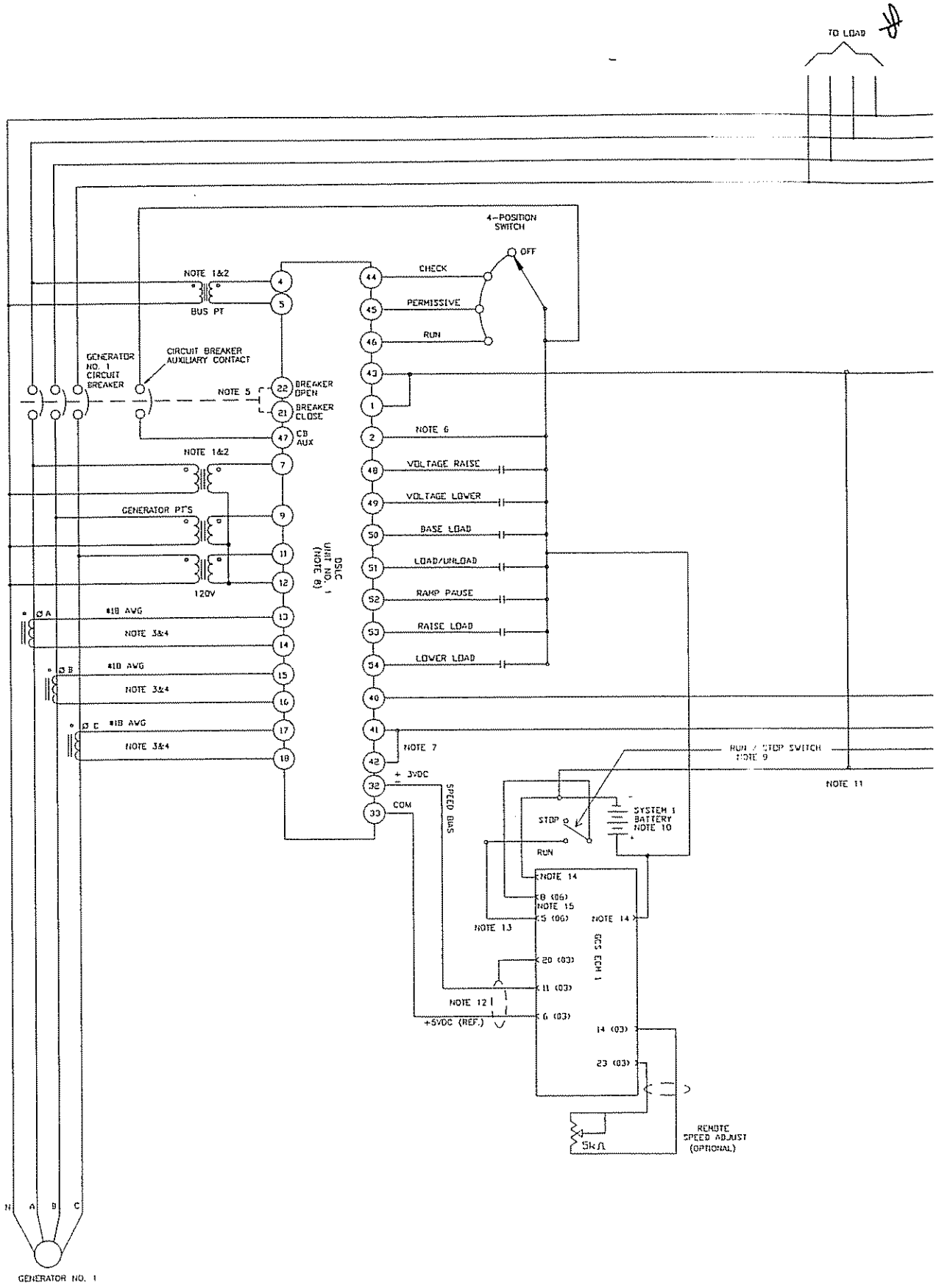
TO LOAD
4-POSITION SWITCH
OFF
CHECK
PERMISSIVE
RUN
NOTE 1&2
BUS PT
GENERATOR NO. 1 CIRCUIT BREAKER
CIRCUIT BREAKER AUXILIARY CONTACT
NOTE 5
BREAKER OPEN
BREAKER CLOSE
CB AUX
NOTE 6
VOLTAGE RAISE
VOLTAGE LOWER
BASE LOAD
LOAD/UNLOAD
RAMP PAUSE
RAISE LOAD
LOWER LOAD
GENERATOR PT'S
120V
DSLC UNIT NO. 1 (NOTE 8)
#18 AWG
NOTE 3&4
NOTE 7
+ 3VDC
COM
SPEED BIAS
RUN / STOP SWITCH NOTE 9
NOTE 11
SYSTEM 1 BATTERY NOTE 10
STOP
RUN
NOTE 14
NOTE 15
NOTE 13
NOTE 12
+5VDC (REF.)
GCS ECM 1
REMOTE SPEED ADJUST (OPTIONAL)
5kΩ
GENERATOR NO. 1

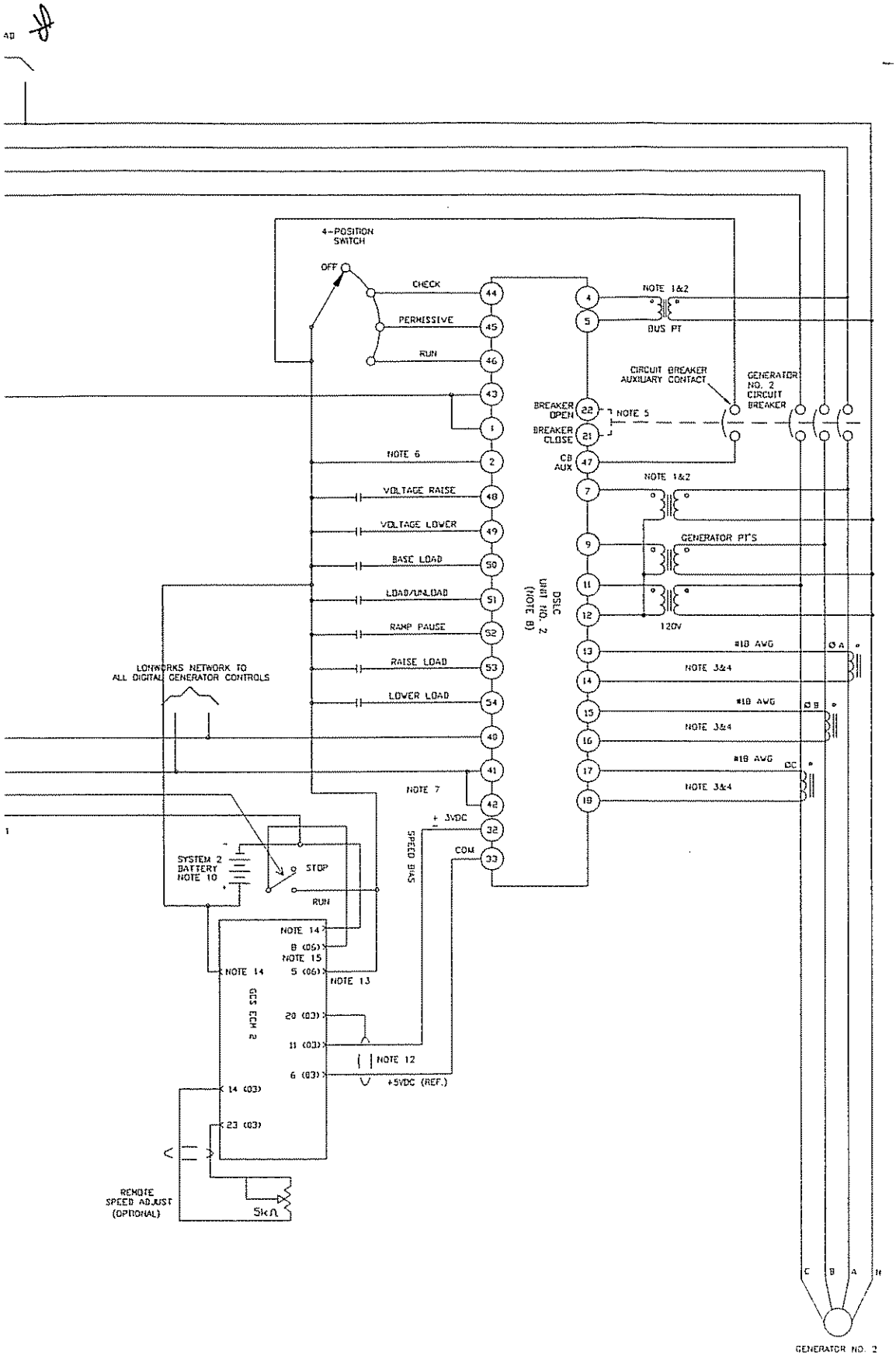

Woodward Digital Wiring Diagram.

QSX15, QSK45, QSK 60 Generator Drive Control System

Katolight Service - Master Repair Manual - Page 3681

THIS PAGE INTENTIONALLY BLANK

InPower™ Configurable Feature

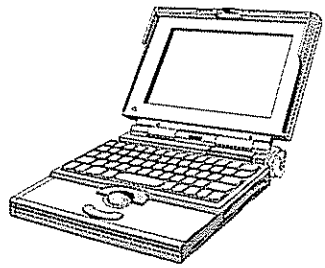

Engine Protection

InPower™ Location:

Adjustments

Engine Protection Adjustments

- ***Engine Cold Warning Threshold***
- ***LOP Warning Threshold Table***
- ***LOP Shutdown Threshold Table***
- ***HOT Warning Threshold ****
- ***HOT Shutdown Threshold ****
- ***LCL Warning Threshold***
- ***LCL Shutdown Threshold***
- ***LCP Warning Threshold Table *****
- ***LCP Shutdown Threshold Table *****
- ***LCT Warning Threshold***
- ***HCT Shutdown Threshold***
- ***HCT Shutdown Threshold***
- ***HBF Warning Threshold Table *****
- ***HBF Shutdown Threshold Table *****
- ***HFT Warning Threshold *****
- ***HFT Shutdown Threshold *****
- ***HAT Warning Threshold *****
- ***HAT Shutdown Threshold *****
- ***IMT Warning Threshold***
- ***IMT Shutdown Threshold***
- ***Overspeed Shutdown Threshold***

Engine Protection

The engine protections shown to the left are user configurable, within pre-programmed limits, using InPower™. The InPower™ software will not allow settings outside the minimum and maximum ranges established for your engine.

QSX15 Only:

The engine protections designated with a single asterisk (*) are only available on the QSX15 model engines.

QSK45 and QSK60 Only:

The engine protections designated with a double asterisk (**) are only available on the QSK45 and QSK60 model engines.

Abbreviations:

LOP	**Low Oil Pressure**
HOT*	**High Oil Temperature**
LCL	**Low Coolant Level**
LCP**	**Low Coolant Pressure**
LCT	**Low Coolant Temperature**
HCT	**High Coolant Temperature**
HBF**	**High Blowby FLow**
HFT**	**High Fuel Temperature**
HAT**	**High Aftercooler Water Temperature**
LCT	**Low Coolant Temperature**
IMT	**Intake Manifold Temperature**

NOTE: *When the engine coolant temperature is less than the LCT Warning Threshold* ***when the engine is running****, a Common Warning will be activated to signal that a Low Coolant Temperature condition exists.*

The Engine Cold Warning Threshold is intended for use when block heaters are installed. When the engine coolant temperature is less than the Engine Cold Warning Threshold ***prior to starting the engine****, a Common Warning will be activated to signal that an Engine Cold Warning condition exists.*

Setting the Engine Cold Warning Threshold at too high a level can cause nuisance Engine Cold Warning faults. The customer is responsible for properly setting the Engine Cold Warning Threshold at the proper level, dependent upon whether block heaters are being used, or are not used.

The switch for the Low Coolant Level (LCL) engine protection is mandatory and must be installed. A customer option for this switch is available from Cummins for use with these engines. See the Cummins G-Drive Sales Handbook or contact your local Cummins distributor for further details and ordering information. Also, see the ***Miscellaneous Application Requirements and Information*** section on page 101 for further details about the Coolant Level switch.

InPower™ Configurable Feature

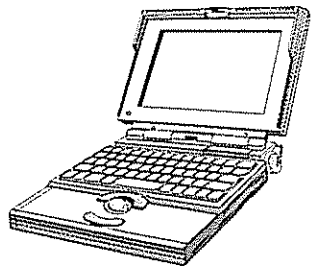

Shutdown Override

The ECM can be configured to allow continued engine operation while most shutdown faults are active. Even when enabled, the Shutdown Override feature does not allow engine operation while overspeed or loss of engine speed faults are active, or while the ECM detects that the Local E-Stop, Remote E-Stop, or Backup Start Disconnect switches are in an "open" state. All other shutdown faults are overridden when this feature is enabled.

Shutdown Override

InPower™ Location:

Adjustments

Features

Shutdown Override

Shutdown Override Enable

The Shutdown Override feature is enabled using the Cummins InPower™ electronic service tool. This is accomplished by setting the *Shutdown Override Enable* parameter to "Enabled".

⚠ WARNING ⚠

The Shutdown Override feature prevents the ECM from shutting down the engine, even when engine-damaging conditions are present. Damage done to the engine or the GCS while in Shutdown Override mode is ***NOT*** *covered by the engine warranty.*

This feature should only be used in applications where engine damage is an acceptable trade-off for keeping the engine running.

NEVER *use this feature to disable "nuisance" alarms. All alarms are to be treated as real until the root-cause is determined.*

An external switch can also be used to implement the shutdown override feature. The schematic diagrams on page 82 describe two different means to implement the external shutdown override control.

NOTE: *In order for the external Shutdown Override to operate, the Shutdown Override Enable parameter must be set to "Enabled" using InPower™.*

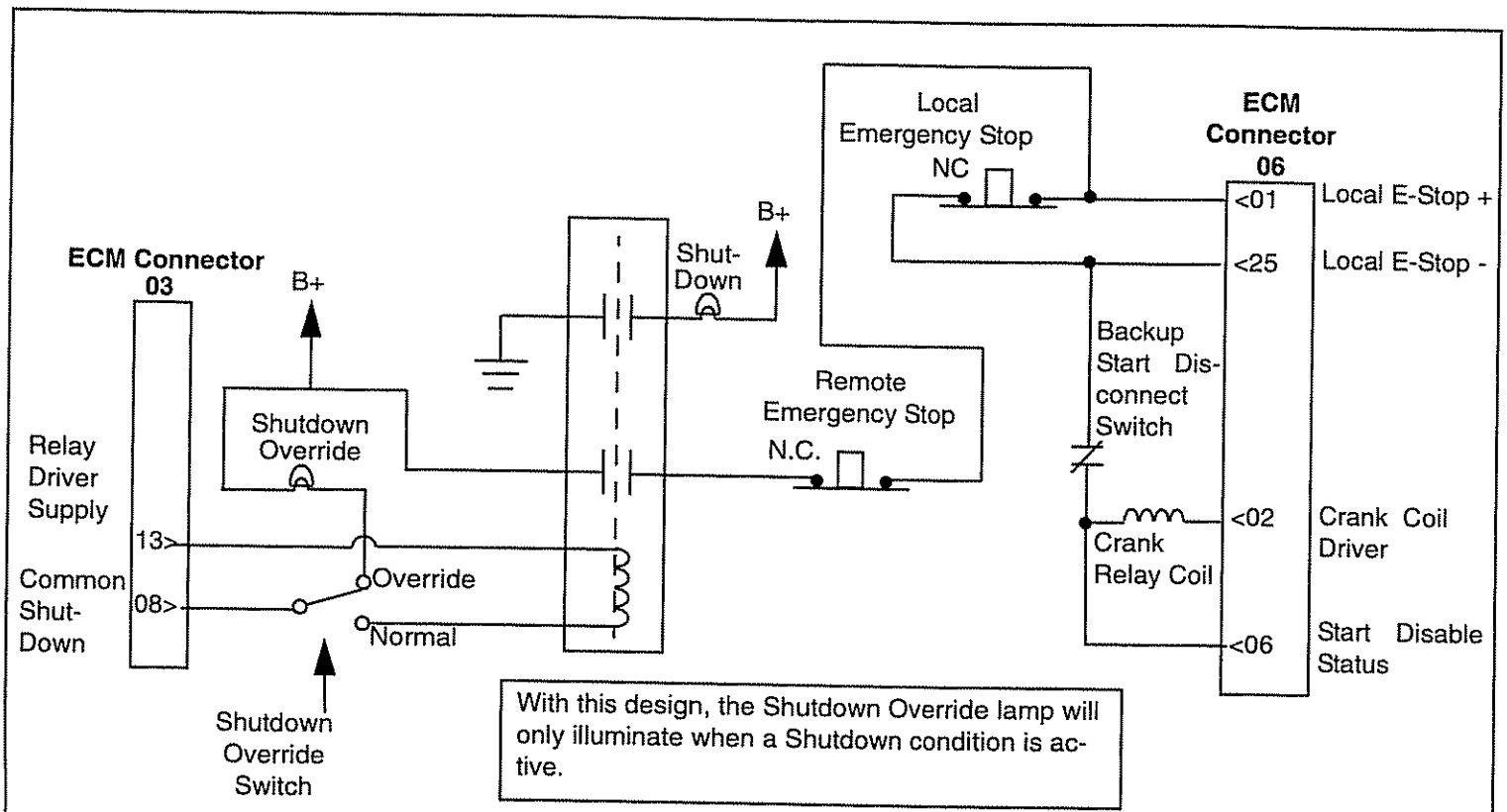
Local
Emergency Stop
NC
ECM
Connector
06
<01
Local E-Stop +
<25
Local E-Stop -
B+
ECM Connector
03
B+
Shut-
Down
Backup
Start Dis-
connect
Switch
Remote
Emergency Stop
N.C.
Shutdown
Override
Relay
Driver
Supply
13>
<02
Crank Coil
Driver
Crank
Relay Coil
Common
Shut-
Down
08>
Override
Normal
<06
Start Disable
Status
Shutdown
Override
Switch
With this design, the Shutdown Override lamp will only illuminate when a Shutdown condition is active.

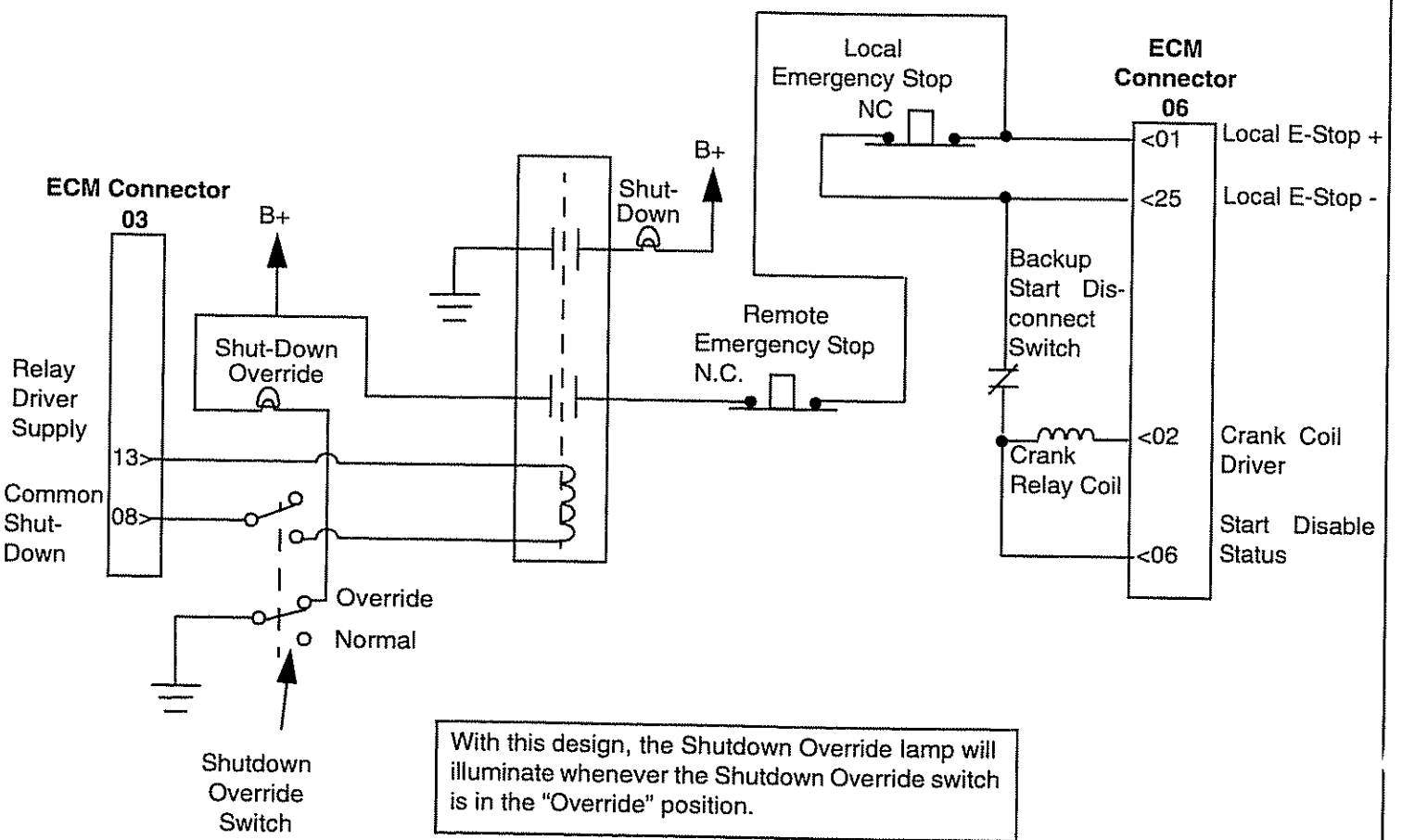
Local
Emergency Stop
NC
ECM
Connector
06
<01
Local E-Stop +
<25
Local E-Stop -
B+
ECM Connector
03
B+
Shut-
Down
Backup
Start Dis-
connect
Switch
Remote
Emergency Stop
N.C.
Shut-Down
Override
Relay
Driver
Supply
13>
<02
Crank Coil
Driver
Crank
Relay Coil
Common
Shut-
Down
08>
Override
Normal
<06
Start Disable
Status
Shutdown
Override
Switch
With this design, the Shutdown Override lamp will illuminate whenever the Shutdown Override switch is in the "Override" position.

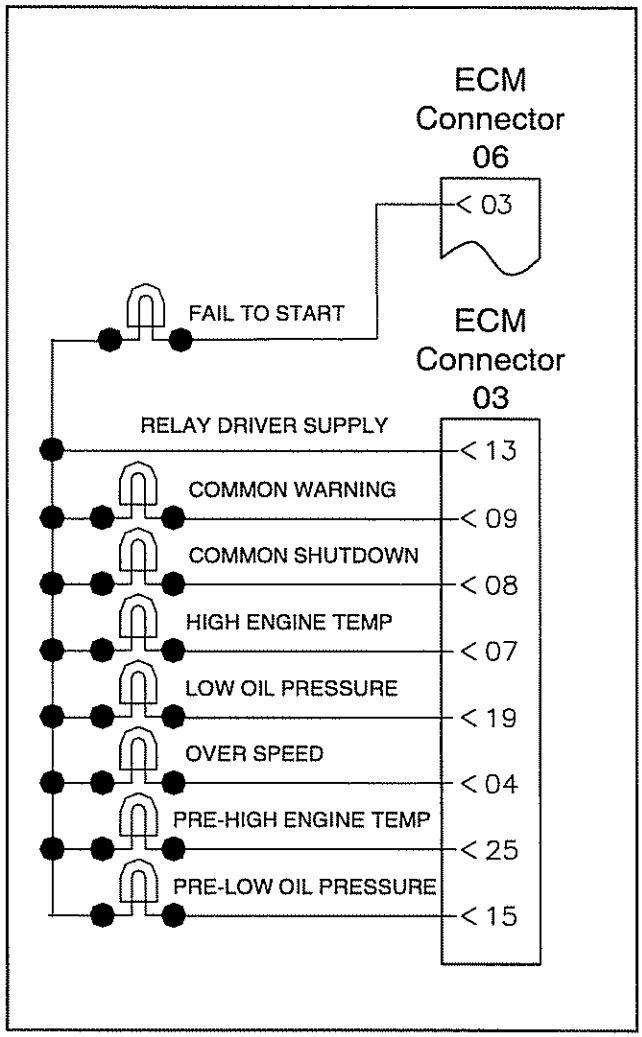

Alarm Lamp/Relay Drivers

Eight (8) output drivers are provided to annunciate that specific engine protection alarm conditions have occurred. Each output can be used to drive either a lamp or a relay. The following alarm drivers are provided:

Engine Shutdown Alarms

Drivers are provided for annunciating three Engine Shutdown Alarms for the following conditions:

- High Engine Temperature (HET)
- Low Oil Pressure (LOP)
- Overspeed (OS)

A condition that causes an HET, LOP or OS Engine Shutdown Alarm will activate the relay or lamp connected to the respective lamp/relay driver output.

Common Shutdown Alarm

A driver is provided for annunciating a Common Shutdown Alarm. The Common Shutdown Alarm activates when:

- Any Engine Shutdown Alarm condition is active
- The Local or Remote Emergency Stop Input is activated (either or both of these switches is "open")

Engine Warning Alarms

Drivers are provided for annunciating three Engine Shutdown Alarms for the following conditions:

- Pre-High Engine Temperature (HET)
- Pre-Low Oil Pressure (LOP)
- Fail-to-Start

A condition that causes a Pre-HET or Pre-LOP Engine Warning Alarm will activate the relay or lamp connected to the respective lamp/relay driver output. The Fail-to-Start output activates when the engine fails to start after the number of start attempts configured using the Cycle/Continuous Cranking feature have expired without successfully starting the engine. See the ***Cycle/Continuous Cranking*** section on page 47 for further details.

Common Warning Alarm

A driver is provided for annunciating a Common Warning Alarm. The Common Warning Alarm activates when any Engine Warning Alarm condition is active.

Each lamp/relay driver is rated to handle a maximum continuous voltage equivalent to Battery (+) and 200mA maximum continuous sink current.

InPower™
User Configurable Feature

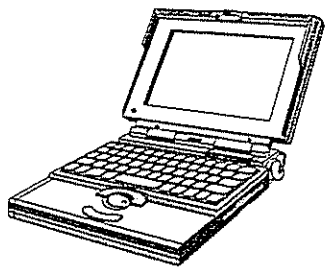

Alarm Lamp/Relay Driver Diagnostics

InPower™ Location:

Adjustments

Features

Relay Drivers

Relay Driver Supply Diagnostic Enable

Fail to Start Driver Diagnostic Enable

Common Warning Driver Diagnostic Enable

Common Shutdown Driver Diagnostic Enable

HET Driver Diagnostic Enable

LOP Driver Diagnostic Enable

Overspeed Driver Diagnostic Enable

Pre-HET Driver Diagnostic Enable

Pre-LOP Driver Diagnostic Enable

Diagnostic LED Display Window
(located on the side of the ECM)

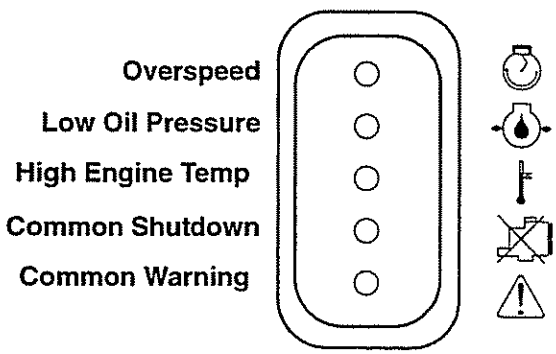

The lamp/relay driver outputs are implemented by making the appropriate connections to ECM connector 03, except for the Fail-to-Start driver output, which is at ECM connector 06.

The Relay Driver Supply voltage is supplied by the ECM at pin 13 of ECM connector 03.

The lamp/relay drivers and driver supply voltage diagnostics must be enabled in order for the ECM to properly diagnose and report any lamp/relay driver faults. This is accomplished by setting the corresponding driver, or the driver supply, diagnostic parameters to "Enabled" using InPower™.

NOTE: *The ECM lamp/relay driver diagnostics are capable of detecting an open or short circuit condition. In order for the open circuit diagnostic to properly function, the lamp/relay load must draw between 2 to 200 mA current at +24 VDC. A load drawing less than 2mA will be diagnosed and reported as a driver open circuit fault. If any lamp or relay driver load draws less than 2mA, the respective driver diagnostic should be disabled to prevent nuisance open circuit faults from being reported.*

Fault Diagnostics

The following information is not intended to take the place of similar information provided in the engine Troubleshooting and Repair Manual (Cummins Bulletin No. 3666393). If there are discrepancies between the information in this manual and the information in the Troubleshooting and Repair Manual, the Troubleshooting and Repair Manual takes precedence.

Diagnostic LEDs

There are five diagnostic LEDs located on the side of the ECM that are visible through the display window. Following is a description of the condition being reported when the respective LED is illuminated:



Overspeed - this red LED indicates that an overspeed shutdown fault has occurred.



Low Oil Pressure - this red LED indicates that an engine Low Oil Pressure shutdown fault has occurred.



High Engine Temperature - this red LED indicates that a High Coolant Temperature or a High Intake Manifold Temperature shutdown fault has occurred.



Common Shutdown - this red LED indicates that a shutdown fault, other than those identified above, has occurred.



Common Warning - This yellow LED indicates that a warning fault has occurred.

QSX15, QSK45, QSK60 Generator Drive Control System

Service Tool Interface

A 9-pin circular connector is accessible on the Engine Harness to provide a means of connecting the PC to the ECM so that the InPower™ electronic service tool can be used. Refer to the QSX15, QSK45, QSK60 Generator-Drive Control System Troubleshooting and Repair Manual (Cummins Bulletin No. 3666393) for further details.

Fault Codes

The ECM can record and report certain detectable diagnostic conditions. These conditions are recorded as fault codes, which can be used to assist in troubleshooting engine and control system failures. Refer to the QSX15, QSK45, QSK60 Generator-Drive Control System Troubleshooting and Repair Manual (Cummins Bulletin No. 3666393) for further details.

Fault codes recorded in the ECM memory can be accessed in three different ways:

- Diagnostic Mode (Fault Flash Out)
- Cummins InPower™ Electronic Service Tool
- Modbus Communications Datalink

Diagnostic Mode

A Diagnostic Mode input is provided to allow a means of placing the ECM into the diagnostic mode. When the ECM is in the diagnostic mode, fault codes are visually displayed, or "flashed out", using the Common Warning and Common Shutdown LEDs on the ECM. See the ***Fault Flash Out*** section on page 87 for further details.

To implement this feature, the customer supplies a bi-state signal, or switch, to pin 7 of ECM connector 06. Pin 8 of ECM connector 06 is used to provide an electrical signal path to GND through the ECM.

When the switch is set in the position that connects GND to the Diagnostic Mode input, the input is in the "Fault Flash Out Enabled" state (GND = Fault Flash Out Enabled).

When the switch is set in the position that opens the circuit connection, disconnecting GND from the Diagnostic Mode input, the input is in the "Fault Flash Out Inhibited" state (Open = Fault Flash Out Inhibited).

The diagnostic mode can also be enabled by removing the protective covers from the Diagnostic Mode Enable connectors on the Engine Harness, and plugging the two connectors together (the Diagnostic Mode Enable connectors are opposite genders).

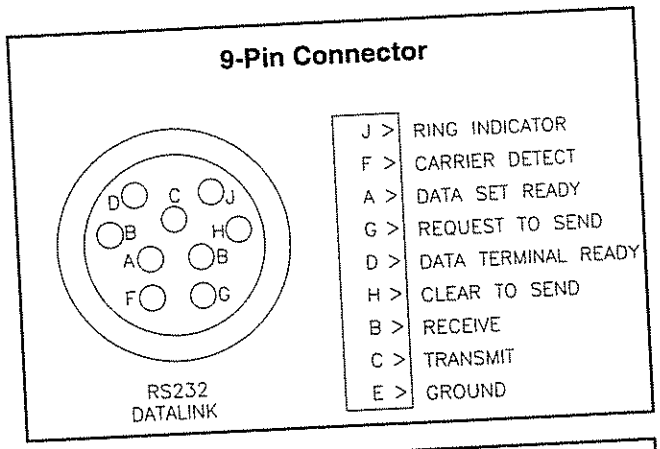

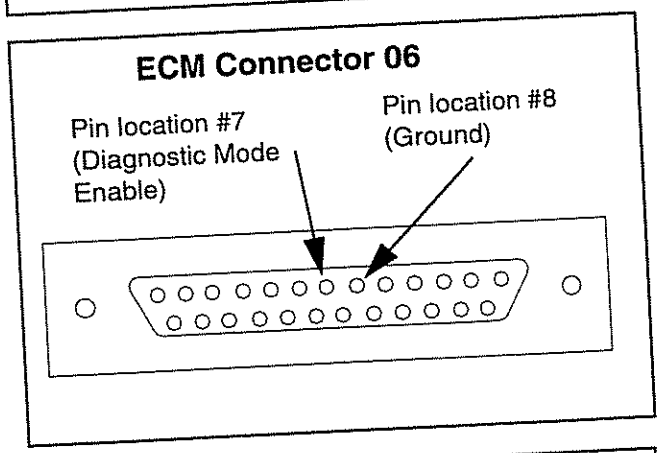

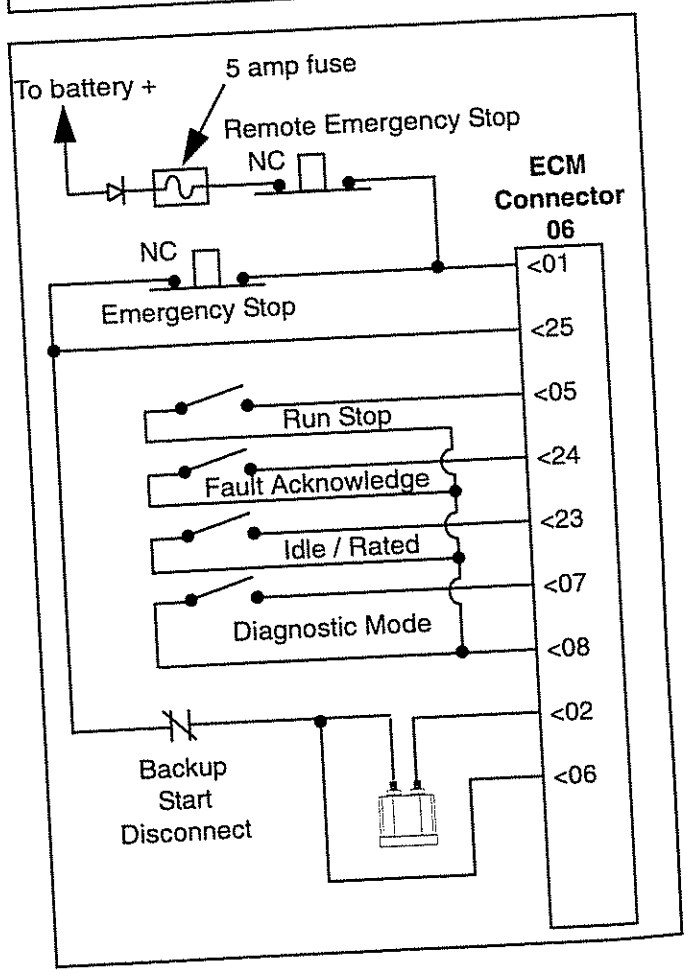

Diagnostic LED Display Window
(located on the side of the ECM)

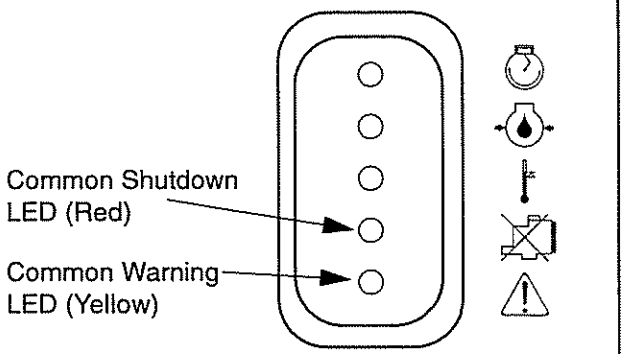

Once the diagnostic mode has been enabled, the Common Warning LED will flash once signifying the start of a new fault code, and then the fault code will flash out on the Common Shutdown LED. See the ***Fault Flash Out*** section on page 87 for further details.

> ***NOTE:*** *The Run/Stop input must be set to the "Stop" state in order to enter the Diagnostic Mode. If the Run/Stop input state changes to "Run" while the ECM is in the Diagnostic Mode, the ECM will immediately exit Diagnostic Mode and any fault flash out in process will terminate.*

InPower™
User Configurable Feature



The Cummins InPower™ electronic service tool can also be used to read the fault codes. Refer to the InPower™ for Generator-Drive Control System Manual (Cummins Bulletin No. 3397100) for detailed instructions on how to use InPower™ to read fault codes.

A third means of reading the fault codes is available via the Modbus communications datalink. See the ***Modbus Communications Datalink*** section on page 97 for further details.

GCS Faults

InPower™ Location:

Faults

QSX15, QSK45, QSK60 Generator Drive Control System

Fault Flash Out

When the ECM is in Diagnostic Mode, the Common Shutdown and Common Warning LEDs are used to display the fault codes of the currently active shutdown and warning faults.

These active fault codes are flashed out in the following method:

1. The first active fault code is flashed out 3 times consecutively.
2. If there is more than one active fault code, the process advances to the next fault and flashes out its code 3 times and so forth until all of the active faults have been displayed.
3. If the Fault Flashout mode is still active after all faults have been displayed, the process starts over again with the first active fault.
4. This cyclical display of active faults continues while Diagnostic Mode is active.

Following is a graphic depiction of the fault code flash out sequence for a 3-digit fault code:

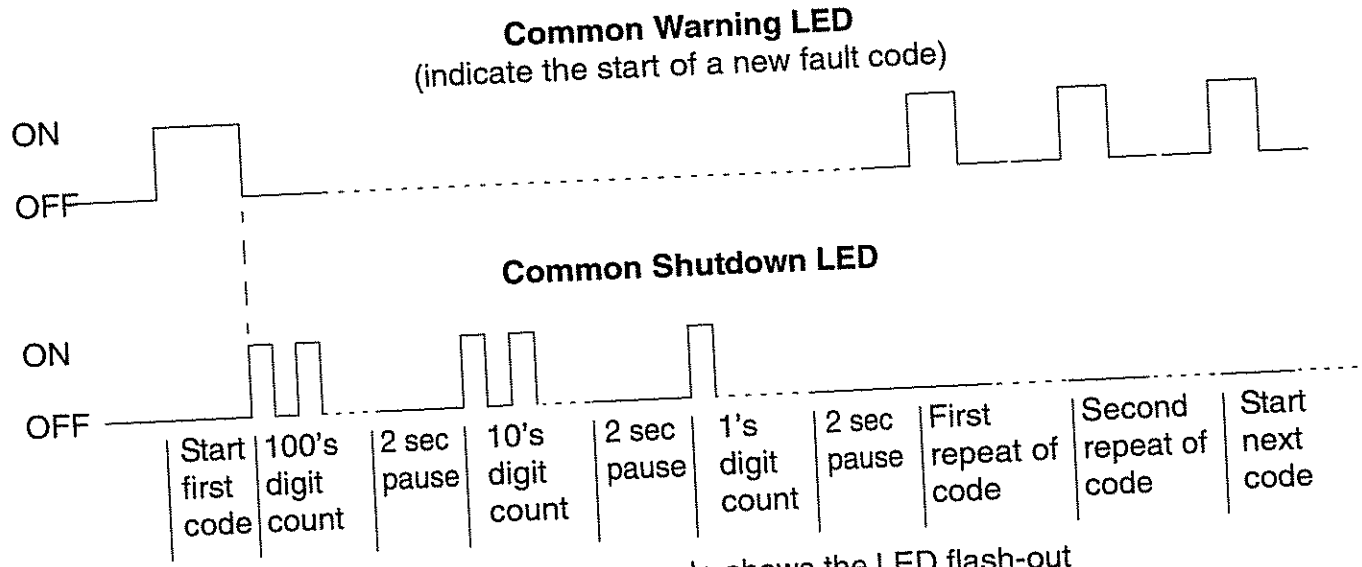

The above example shows the LED flash-out sequence for reporting fault code 221.

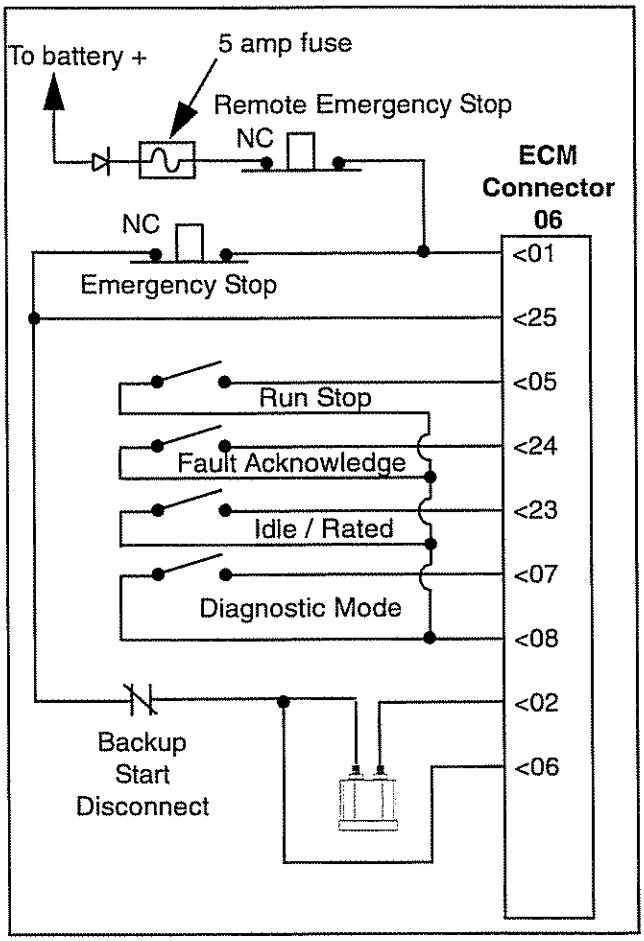

InPower™
User Configurable Feature



Fault Acknowledge

InPower™ Location:

Monitor

Control

Starting / Stopping

Fault Acknowledge Command

Fault Acknowledge

A Fault Acknowledge input is provided to allow a means of acknowledging the Common Warning and Common Shutdown lamp/relay driver outputs and Common Warning and Common Shutdown Diagnostic LED's that activate due to a fault condition. This feature is also used to acknowledge a shutdown condition and allow a re-start of the engine after it has shutdown due to an Emergency Shutdown condition.

To implement this feature, the customer supplies a normally open momentary bi-state signal, or switch, connection to pin 24 of ECM connector 06. Pin 8 of ECM connector 06 is used to supply an electrical signal path to GND through the ECM.

When the switch is actuated, momentarily connecting GND to the Fault Acknowledge input, the ECM will extinguish the indication of warning and shutdown conditions being displayed by the lamp/relay drivers and the diagnostic LED's (GND = Acknowledge, Open = Not Acknowledge).

> ***NOTE:*** *The Warning (Pre-Alarm) indications can be acknowledged when the engine is stopped or while the engine is still running. The Shutdown (Alarm) indications can only be acknowledged when the engine is stopped and the Run/Stop switch is in the "Stop" state.*
>
> *When a shutdown alarm condition is recognized by the ECM, the user must acknowledge this alarm before the engine can be re-started.*
>
> *Activation of the Fault Acknowledge input does not clear fault codes. The Cummins InPower™ Electronic Service Tool must be used to clear fault codes. Refer to the QSX15, QSK45, QSK60 Generator-Drive Control System Troubleshooting and Repair Manual (Cummins Bulletin No. 3666393) for details.*

The Fault Acknowledge feature can also be activated electronically using InPower™. This is accomplished by setting the *Fault Acknowledge Command* parameter to "Acknowledge". The ECM will automatically reset this parameter to "Not Acknowledge" after it has been activated.

NOTE: *Either the electronic trim, the switch input, or the MODBUS Fault Acknowledge bit can be used to acknowledge fault conditions. See the Modbus Communications Datalink section on page 97 for further information about the MODBUS communications datalink and the MODBUS Fault Acknowledge bit parameter.*

The Fault Acknowledge Command *parameter defaults to "Not Acknowledge" on ECM power-up.*

Snapshot Data

Snapshot data allows the relationship between the fault condition and the state of the ECM inputs and outputs, at the time the condition occurred, to be captured and viewed to assist in troubleshooting. When a fault code is recorded in the ECM, a "snapshot" of data is also recorded by the ECM.

The snapshot data is read using the Cummins InPower™ electronic service tool. Refer to the InPower™ for Generator-Drive Control System Manual (Cummins Bulletin No. 3397100) for detailed instructions on how to use InPower™ to read snapshot data.

NOTE: *To prevent loss of valuable diagnostic information, such as Fault Codes and Snapshot Data, power must be available to the ECM at all times during normal engine operation and for at least one minute following an engine shutdown.*

InPower™
Configurable Feature



Built-In Test

InPower™ Location:

Test

Self Test

Built In Test Command

System Check-Out / Test

Built-In Test

The following Built-In Tests are provided for the purpose of checking specific ECM electronic features:

- Lamp/Relay Driver Start-Up Test
- Stationary Test
- Cranking Test

The Lamp/Relay Driver Start-Up Test is automatically performed whenever the engine is started. It is also the first test conducted in the sequence of tests performed during the Stationary and Cranking Tests. The Stationary and Cranking Tests are initiated using InPower™ . This is accomplished by setting the *Built In Test Command* toggle parameter to the desired state, either "Test-Stationary" or "Test-Cranking".

When the Stationary Test is initiated the Outputs Test and Fuel Shut-Off Test, as described on page 91, will be performed sequentially.

When the Cranking Test is initiated the Outputs Test, Fuel Shut-Off Test, and Starter Test, as described on page 91, will be performed sequentially.

The Stationary or Cranking Tests can be aborted at any moment when commanded to do so using the Cummins InPower™ electronic service tool. This is accomplished by setting the *Built In Test Command* toggle parameter to "Test-Abort". The *Built In Test Command* toggle parameter will automatically reset to "Test-Abort" once the Stationary or Cranking Test is completed.

While conducting each test, the standard ECM diagnostic routines are performed. If any faults are detected during this time, the faults are recorded and reported using the means described in the ***Fault Diagnostics*** section on page 84.

QSX15, QSK45, QSK60 Generator Drive Control System

Lamp/Relay Driver Start-Up Test

The Lamp/Relay Driver supply voltage at connector 03 is normally on when the ECM is powered. During engine start-up the ECM will turn this supply voltage off for a 1.5 second interval as a means of testing the lamps/relays driven by the supply. Any Lamp/Relay Driver output that is active during this test will extinguish/de-energize during the 1.5 second test duration.

Outputs Test

During the Outputs test all meter drivers, lamp/relay drivers and diagnostic LEDs will be exercised. The meter driver output test will respond according to the Analog Output Test Profile shown to the right. The Lamp/Relay drivers and LEDs will respond according to the Discrete Output Test Profile shown to the right. Note that the Outputs Test for the lamps/relay drivers and the LEDs are performed first, followed by the meter drivers test.

Analog Output Test Profile

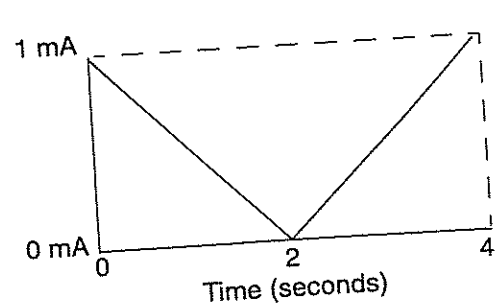

Fuel Shut-Off Test

Immediately following the Output Tests, the Fuel Shut-Off Test will be initiated. During this test, the FSO driver will respond according to the Discrete Output Test Profile shown to the right. Also, the fueling actuators are de-energized while this test is being conducted.

Discrete Output Test Profile

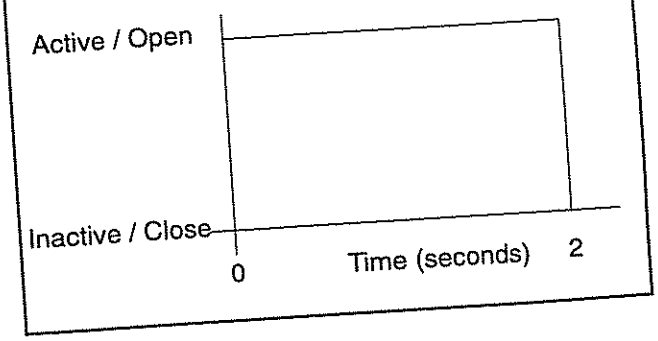

Starter Test

The Starter Test will be performed immediately following the Fuel Shut-Off Test, only when the Cranking Test is being performed. For this test, the Crank Relay driver output will respond to the Discrete Output Test Profile shown to the right.

⚠ WARNING ⚠

The Starter Test will cause the engine to crank for 2 seconds, although the engine will not start. All barring devices should be removed from the engine and personnel should be a safe distance away from the engine prior to initiating the Starter Test.

InPower™ Configurable Feature



Additional Test Capabilities

The GCS provides the following additional test capabilities. These test functions are set-up using InPower™.

> ***NOTE:*** *These tests require that the normal input/output signal levels be manually overriden by the user.*
>
> *Once testing is complete, be certain that all override enables are set back to "Disabled" to ensure that the ECM is using the actual engine sensor signals and controlling the meter and lamp/relay drivers to the actual output level/ state.*
>
> *Override enables will default back to "Disabled" when the ECM is powered off and back on.*

Meter Drivers Test

InPower™ Location:

Test
- Outputs
  - Meter Drivers
    - Coolant Temp
      - ***Coolant Temp Meter Override***
      - ***Coolant Temp Meter Override Enable***
    - Engine Speed
      - ***Engine Speed Meter Override***
      - ***Engine Speed Meter Override Enable***
    - Oil Pressure
      - ***Oil Pressure Meter Override***
      - ***Oil Pressure Meter Override Enable***

Meter Drivers

The normal analog meter driver outputs can be overriden to command a specified test output level. This is accomplished by setting the respective meter override enable command to "Enabled" and setting the override value to the desired meter output driver current.

Lamp/Relay Drivers

The state of each Alarm Lamp/Relay Driver output can be overriden individually. This is accomplished by setting the respective driver override enable command to "Enabled" and setting the override value to the desired driver output state.

Lamp/Relay Drivers Test

InPower™ Location:

Test
- Outputs
  - Relay Drivers
    - Common Shutdown
      - ***Common Shutdown Driver Override Command***
      - ***Common Shutdown Driver Override Enable***
    - Common Warning
      - ***Common Warning Driver Override Command***
      - ***Common Warning Driver Override Enable***
    - Fail to Start
      - ***Fail to Start Driver Override Command***
      - ***Fail to Start Driver Override Enable***
    - HET Shutdown
      - ***HET Driver/LED Override Command***
      - ***HET Driver/LED Override Enable***
    - LOP Shutdown
      - ***LOP Driver /LED Override Command***
      - ***LOP Driver/LED Override Enable***
    - Overspeed
      - ***Overspeed Driver/LED Override Command***
      - ***Overspeed Driver/LED Override Enable***
    - Pre-HET Warning
      - ***Pre-HET Driver Override Command***
      - ***Pre-HET Driver Override Enable***
    - Pre-LOP Warning
      - ***Pre-LOP Driver Override Command***
      - ***Pre-LOP Driver Override Enable***

Engine Protection Verification Test

InPower™ Location:

Test
- Fault Simulation
  - Engine Protection Tests
    - Aftercooler Water Temp**
      - ***Aftercooler Water Temp Override Command***
      - ***Aftercooler Water Temp Override Enable***
    - Blowby Flow**
      - ***Blowby Flow Override Command***
      - ***Blowby Flow Override Enable***
    - Coolant Pressure**
      - ***Coolant Pressure Override Command***
      - ***Coolant Pressure Override Enable***
    - Coolant Temp
      - ***Coolant Temp Override Command***
      - ***Coolant Temp Override Enable***
    - Fuel Temp**
      - ***Fuel Temp Override Command***
      - ***Fuel Temp Override Enable***
    - Intake Manifold Temp
      - ***Intake Manifold Temp Override Command***
      - ***Intake Manifold Temp Override Enable***
    - Oil Pressure
      - ***Oil Pressure Override Command***
      - ***Oil Pressure Override Enable***
    - Oil Temp*
      - ***Oil Temp Override Command***
      - ***Oil Temp Override Enable***
    - Overspeeding
      - ***Overspeed Shutdown Threshold***
      - ***Engine Speed Reference Override Command***
      - ***Engine Speed Reference Override Enable***
      - ***Accel Ramp for Engine Speed Override***
      - ***Decel Ramp for Engine Speed Override***

Engine Protection Verification

The normal sensor values used by the ECM to perform engine protection can be overriden to simulate a specified test signal level. This is accomplished by setting the respective engine sensor override enable command to "Enabled" and setting the override value to the desired sensor input level.

QSX 15 Only:

The engine protection verification test parameters designated with a single asterisk (*) are only available on the QSX15 model engines.

QSK45 and 60 Only:

The engine protection verification test parameters designated with a double asterisk (**) are only available on the QSK45 and QSK60 model engines.

Miscellaneous Outputs / Capabilities

Reset Fuel Consumption

The ECM stores the total cumulative amount of fuel used by the engine in non-volatile memory. There is also a second fuel consumption counter, called *Fuel Consumption Since Reset*, that stores the amount of fuel consumed since this counter was last reset. The *Fuel Consumption Since Reset* counter can be reset to zero using InPower™. This is accomplished by selecting the *Reset Fuel Consumption* toggle parameter.

InPower™ Configurable Feature

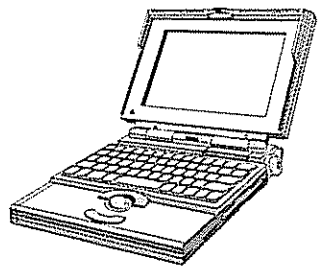

Reset Fuel Consumption

InPower™ Location:

Adjustments
Reset History Counters
Fuel
Reset Fuel Consumption

Power Limiter

The Power Limiter feature provides the capability to select a power limit best suited for the specific application in which the engine is being used (i.e. standy, prime, or continuous power applications). This is accomplished by setting the *Power Limiter State* parameter to the desired selection (Standy, Limited Time Prime, Unlimited Time Prime, or Continuous) using InPower™.

The Power Limiter feature must be enabled in order make the feature operational. This is accomplished by setting the *Power Limiter Enable* parameter to "Enabled" using InPower™. Once enabled, the engine power is limited by the maximum fueling that the fuel system is commanded to deliver to the engine based on limits pre-programmed in the ECM.

When the Power Limiter State is set to "Continuous" the *Continuous Scale Factor* parameter can be used to control the maximum amount of continuous power that the engine is capable of providing. This is accomplished by setting the *Continuous Scale Factor* to a value between 0 and 1, representing the percentage (between 0 and 100%) of the total engine continuous rated power capability.

> ***NOTE:*** *There is only a scale factor for use with continuous power applications. For engines used in standby or prime-time applications, the Power Limiter feature uses pre-programmed fueling limits and the Continuous Scale Factor parameter setting has no effect.*

Power Limiter

InPower™ Location:

Adjustments
Features
Power Limiter
Power Limiter State
Power Limiter Enable
Continuous Scale Factor

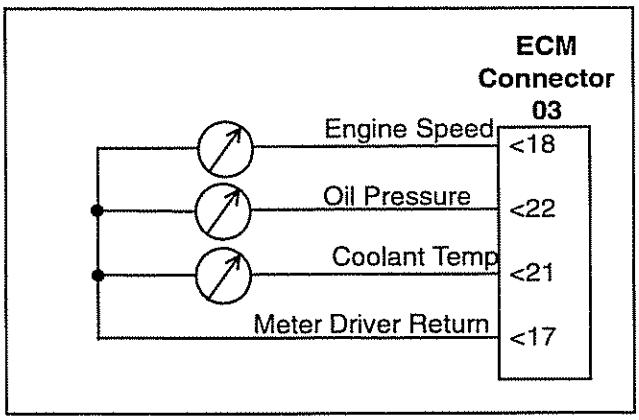

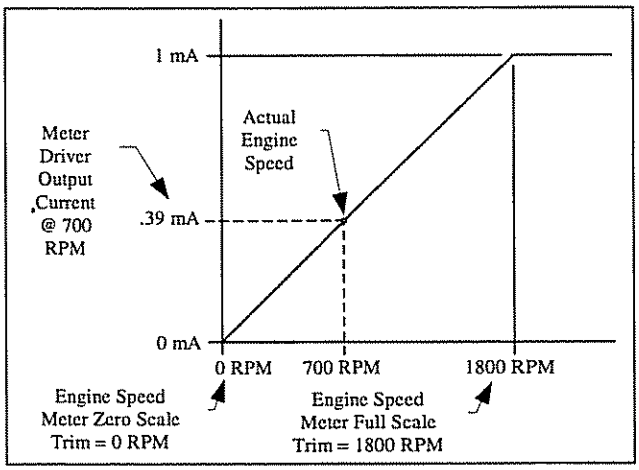

InPower™
Configurable Feature



Analog Meter Drivers

InPower™ Location:

Adjustments

Features

Meter Drivers

Engine Speed Meter Zero Scale

Engine Speed Meter Full Scale

Oil Pressure Meter Zero Scale

Oil Pressure Meter Full Scale

Coolant Temp Meter Zero Scale

Coolant Temp Meter Full Scale

Engine Monitoring

Analog Meter Drivers

Drivers are provided for driving analog meters to monitor the following three engine parameters:

- Engine Speed
- Oil Pressure
- Coolant Temperature

These parameters can be monitored by interfacing with the respective meter driver outputs and meter driver return input of ECM connector 03.

> ***NOTE:*** *The type of meter selected for use with this feature must have a 0 to 1 mA meter movement, with an impedance not greater than 100 ohms. The lower the impedance, the higher the accuracy of the indication will be. A meter with a 50 ohm impedance will provide an accuracy of approximately 1.2%.*

The meter drivers are configured using InPower™ to set the parameter trim values for the lower and upper parameter limits corresponding to 0 and 1 mA driver current levels. For example, the figure at the left is a graph depicting the driver response when configured to monitor the Engine Speed, using 0 and 1800 RPM as the trim values.

Katolight Service - Master Repair Manual - Page 3700

QSX15, QSK45, QSK60 Generator Drive Control System

Modbus Communications Datalink

The ECM contains data that can be read using a remote device communicating with the ECM via Modbus protocol on a two-wire half-duplex RS-485 serial communications bus. In this arrangement, the remote device is the master, and the ECM is a slave, supplying data to the master when requested. For further details refer to the Modbus master-slave technique described in the Modbus Protocol Reference Guide (Modicon Document No. PI-MBUS-300). The Modbus Protocol Reference Guide can be found on the World-Wide-Web (WWW) at the Schneider Automation Inc. web-site. The document is accessible on-line using Universal Resource Locator (URL):

http://www.modicon.com/techpubs/techpubnew/pi_mbus_300.pdf

The following engine and ECM information can be monitored using the Modbus datalink:

QSX 15 Only:

The Modbus data designated with a single asterisk (*) are only available on the QSX15 model engines.

QSK45 and QSK60 Only:

The Modbus data designated with a double asterisk (**) are only available on the QSK45 and QSK60 model engines.

Engine Sensor Parameters

- Engine Speed
- Coolant Temperature
- Oil Pressure
- Ambient Air Pressure
- Intake Manifold Pressure
- Intake Manifold Temperature
- Aftercooler Water Inlet Temperature**
- Blowby Flow**
- Coolant Pressure**
- Fuel Pump Pressure**
- Fuel Rail Pressure**
- Fuel Outlet Pressure*
- Oil Temperature*
- Fuel Inlet Temperature**
- Timing Rail Pressure**
- Coolant Level

Switch Input States

- Idle/Rated
- Run/Stop
- Remote Emergency Stop

Adjustable Input Settings

- Frequency Adjust Pot
- Droop Adjust Pot
- Governor Gain Adjust Pot

Speed Bias Inputs

- ±0.2V Speed Bias Signal
- ±2.5V Speed Bias Signal

Lamp/Relay Driver States

- Common Shutdown
- Common Warning

Actuator Driver States
- Fuel Shut-Off Solenoid

Fault/Diagnostic Data
- Active Warning Fault Events
- Active Shutdown Fault Events
- Most Recent Fault Events

Other GCS/ECM Data
- Battery Voltage
- Operator Interface Mode
- Engine Running Time
- ECM On-Time
- Base Frequency
- Base Speed
- Final Speed Reference
- Estimated Torque
- Load Profile Monitor
- Fuel Consumption Rate
- Cumulative Fuel Consumption

The customer can implement the RS-485 physical interface by connecting the shielded twisted-pair serial communications bus wires RS485+ and RS485- (pins 21 and 18 respectively) and the bus shield (pin 20) of ECM connector 06.

The Modbus operates at a communications rate of 9600 baud. At this data rate, the maximum specified bus length of 4000 ft. [1219m] can be achieved. If the ECM is connected at either end of the communications bus, Term 1 and Term 2 (pins 22 and 19 respectively) of ECM connector 06 are to be jumpered by shorting these two pins together. If the ECM is not connected at either end of the bus, Term 1 and Term 2 should be left unconnected.

For further details regarding RS-485 implementation and applications, refer to Electronic Industries Association Standard EIA-485, "Electrical Characteristics of Generators and Receivers for use in Balanced Digital Multi-Point Systems". Additional information can be found on the WWW at the B&B Electronics Manufacturing Company website. Refer to the "RS-422 and RS-485 Application Note" accessible on-line using URL:

http://www.bb-elec.com/bb-elec/literature/tech/485appnote.pdf

The information following provides specific details required to implement the digital portion of the Modbus Interface. Please refer to Modicon's Modbus Protocol Reference Guide for further details not inlcuded in this manual

The Modbus interface supports the Remote Terminal Unit (RTU) mode message framing only. The communications parameters are set at 1 start bit, 8 data bits, no parity and 2 stop bits. The ECM slave device address is 1.

Modbus register data available for all engine models is defined in Appendix A. Appendix B defines the register data available for only the QSX15 model engine. Appendix C defines the register data available for only the QSK45 and QSK60 model engines. Modbus register parameters are identified as either Signed (S) or Unsigned (U) in the Type column of the respective tables. Where signed values are used, the value is a 16-bit 2's complement number. The maximum amount of register data the ECM can return in a slave response is 16 registers. The maximum length of the entire message must not exceed 256 bytes.

Appendix D defines the bit data available via the Modbus for all engine models. The maximum amount of bit data the ECM can return in a slave response is 32 bits (specified as "inputs", per the Modbus Protocol Reference Guide). The maximum length of the entire message must not exceed 256 bytes.

Supported Modbus exception codes are defined in Appendix E, and supported diagnostic sub-functions are defined in Appendix F.

First Time Engine Start

Prior to starting the engine for the first time the following Engine Check and Functional Test procedures should be performed.

Engine Check

Perform the following checks:

- Verify nominal battery voltage
- Verify there are no active faults
- Using InPower™, verify the following critical sensors are indicating a normal value (with engine not running)
  - Boost Pressure
  - Fuel Rail Pressure
  - Fuel Pump Pressure
  - Oil Pressure
  - Coolant Temperature
- Manually check that the Oil Level is normal
- Manually check that the Coolant level is normal

If any problems or abnormal conditions are observed, perform any necessary troubleshooting and repairs prior to performing the following functional test.

Control System Functional Test

Perform the following control system tests in the sequence shown. Verify by observation that the expected system/engine response occurs during each test. These tests are described in detail in the ***Built-In Test*** section on page 90 of this manual.

- Stationary Test
- Cranking Test

If any test fails to produce the expected result, perform any necessary troubleshooting and repairs prior to attempting to start the engine for the first time.

Engine Starting

Prior to starting the engine for the first time, the ***Engine Check*** and ***Control System Functional Test*** procedures described on page 99 should be performed.

To start the engine, the Run/Stop input must be set to the "Run" state first. Then to engage the starter and crank the engine, the Crank input must be held in the "Crank" state until the engine starts and is running on its own power. The control system will automatically disengage the starter once the engine speed has increased above a pre-programmed starter disconnect speed. If the starter fails to automatically disengage, the Backup Start Disconnect switch should be used to disengage the starter. See the ***Backup Start Disconnect*** section on page 48 for details.

The control system is designed so that it can be programmed by the customer to prevent damage to the starter due to over-cranking. The maximum cranking time can be programmed using InPower. See the ***Cycle/Continuous Cranking*** section on page 47 for details. When the specified crank engage time has been achieved, the control system will automatically disengage the starter.

Miscellaneous Application Requirements and Information

Customer Supplied Redundant Fuel Shut-Off Devices (QSK45 and QSK60 Only)

On the QSK45 and QSK60 engines, timing rail pressure must be maintained for a minimum of 27 seconds immediately following a commanded engine shutdown. This is necessary in order to prevent hard starting on the next start-up following the shutdown. To comply with this requirement, a customer supplied Fuel Shut-Off (FSO) device must be delayed from shutting off the supply of fuel until after the minimum time interval has expired. A time delay relay driven by the customer supplied run relay can be used to implement the required time delay.

Customer Supplied Coolant Level Switch

The Engine Harness has a provision for installing a customer supplied Coolant Level Switch. The Coolant Level Switch interface connector on the harness is a Deutsch 4-position connector (Deutsch P/N DT06-4S with a P/N W4S wedge insert) using 0.969 - 1.442 mm^2 sockets (16-18 AWG; Deutsch P/N 1062-16-0122).

A Coolant Level Switch that is compatible for use with the engine can be purchased from Cummins. See the Cummins G-Drive Sales Handbook or contact your local Cummins distributor for further details and ordering information.

The control system must be set-up to read the Coolant Level Switch signal. This is accomplished by setting the *Coolant Level Switch Enable* parameter to "Enabled" using InPower™. This is necessary to ensure that a low coolant level condition can be detected and reported by the control system engine protection feature.

> ***NOTE:*** *Use of the Coolant Level Switch is mandatory and must be installed. The customer is responsible for performing a test to ensure that this feature is set-up correctly and that a low coolant level is being properly detected and reported.*

Double Slave Relay
Configuration with Time Delay

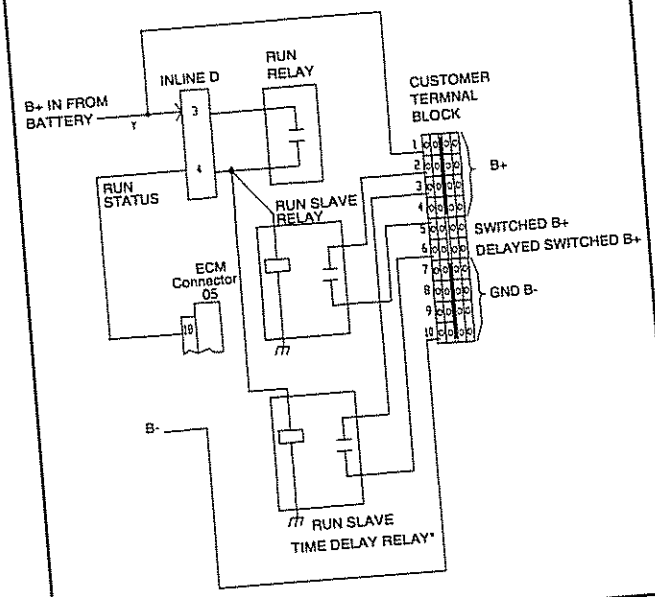

InPower™ Configurable Feature

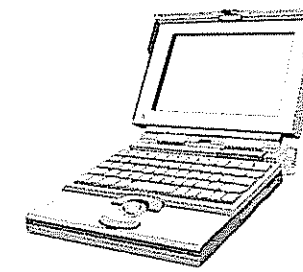

Coolant Level Switch Enable

InPower™ Location:

Adjustments
Engine Protection Adjustments
Coolant Level Switch Enable

Appendix A: Modbus Register Data[1]

Parameter	Function Code	Register Address (Decimal)	Total number of bytes	Read/ Write	Scaling	Type	Eng Units	Range
Engine Speed	04	30001	2	Read Only	8	S	rpm	≥ 0
Coolant Temperature	04	30002	2	Read Only	64	S	°F	-40 to 302
Oil Pressure	04	30003	2	Read Only	64	S	psig psia	0 to 100 (QSK45/60) 6.5 to 75 (QSX15)
Battery Voltage	04	30004	2	Read Only	64	S	volts	0 to 40
Frequency Adjust Pot	04	30005	2	Read Only	80	S	Hz	-3 to 3
Droop Adjust Pot	04	30006	2	Read Only	256	S	%	0 to 10
Ambient Air Absolute Pressure	04	30007	2	Read Only	64	S	In. Hg	10.2 to 30.5 (QSK45/60) 13.2 to 32.6 (QSX15)
Engine Running Time	04	30008-30009	4	Read Only	10	U	sec	0 to 200,000,000
ECM On Time	04	30010-30011	4	Read Only	1	U	sec	0 to 789,000,000
Base Frequency	04	30012	2	Read Only	80	U	Hz	50 to 60
Base Speed	04	30013	2	Read Only	8	U	rpm	1000 to 3600
Final Speed Reference	04	30014	2	Read Only	8	U	rpm	≥ 0
Estimated Torque	04	30015	2	Read Only	1	S	lb.-ft.	0 to 11,952
±0.2V Speed Bias	04	30016	2	Read Only	80	S	Hz	± 7.38
±2.5V Speed Bias	04	30017	2	Read Only	80	S	Hz	± 3
Fuel Consumption Rate	04	30018	2	Read Only	100	U	Gal./Hr.	0 to 600
Cumulative Fuel Consumption	04	30019 to 30020	4	Read Only	100	U	Gal.	0 to 10,000,000
Governor Gain Adjust Pot	04	30021	2	Read Only	256	U	N/A	0.05 to 10.0

1. The maximum amount of data the ECM can return in response to a Read Input Registers request (Function Code 04) is 16 registers. The maximum length of an entire message must not exceed 256 bytes.

Katolight Service - Master Repair Manual - Page 3706

QSX15, QSK45, QSK60 Generator Drive Control System

Parameter	Function Code	Register Address (Decimal)	Total number of bytes	Read/ Write	Scaling	Type	Eng Units	Range
Active Warning Fault Events List[a]	04	30033-30048	32 (total)	Read Only				
Fault Code			*2 each*		*1*	*U*	*N/A*	*0 to 9999*
Active Shutdown Fault Events List[a]	04	30049-30064	32	Read Only				
Fault Code			*2 each*		*1*	*U*	*N/A*	*0 to 9999*
Most Recent Fault Events List[b]	04	30065-30316	504 (total)	Read Only				
Fault Code			*2 each*		*1*	*U*	*N/A*	*0 to 9999*
Fault Count			*2 each*		*1*	*U*	*N/A*	*0 to 65535*
Time Stamp (last occurrence, ECM on time)			*4 each*		*1*	*U*	*sec*	*0 to 789,000,000*
Time Stamp (last occurrence, engine running time)			*4 each*		*10*	*U*	*sec*	*0 to 200,000,000*

a. The Active Warning and Active Shutdown Fault Events Lists each consist of 16 Fault Codes.

b. The Most Recent Fault Events List consists of 42 records of fault data. Each record consists of 12 bytes containing data for the Fault Code. Fault Code, Fault Count, ECM On-Time Time Stamp, and Engine Running Time Stamp. The Fault Count is the number of occurences for the respective Fault Codes.

Parameter	Function Code	Register Address (Decimal)	Total number of bytes	Read/ Write	Scaling	Type	Eng Units	Range
Load Profile Monitor[a] (50Hz Log)	04	30317-30336	40 (Total)	Read Only				
Range #1 (0% to 10% load)	*04*	*30317-30318*	*4 each*		*10*	*U*	*min*	*0 to 200,000,000*
Range #2 (> 10% to 20% load)	*04*	*30319-30320*	*4 each*		*10*	*U*	*min*	*0 to 200,000,000*
Range #3 (>20% to 30% load)	*04*	*30321-30322*	*4 each*		*10*	*U*	*min*	*0 to 200,000,000*
Range #4 (> 30% to 40% load)	*04*	*30323-30324*	*4 each*		*10*	*U*	*min*	*0 to 200,000,000*
Range #5 (> 40% to 50% load)	*04*	*30325-30326*	*4 each*		*10*	*U*	*min*	*0 to 200,000,000*
Range #6 (> 50% to 60% load)	*04*	*30327-30328*	*4 each*		*10*	*U*	*min*	*0 to 200,000,000*
Range #7 (> 60% to 70% load)	*04*	*30329-30330*	*4 each*		*10*	*U*	*min*	*0 to 200,000,000*
Range #8 (> 70% to 80% load)	*04*	*30331-30332*	*4 each*		*10*	*U*	*min*	*0 to 200,000,000*
Range #9 (> 80% to 90% load)	*04*	*30333-30334*	*4 each*		*10*	*U*	*min*	*0 to 200,000,000*
Range #10 (> 90% to 100% load)	*04*	*30335-30336*	*4 each*		*10*	*U*	*min*	*0 to 200,000,000*

a. The Load Profile Monitor is a record consisting of percentile Ranges #1 through #10. Each range consists of 4 bytes designating the amount of time (in minutes) that the engine has been operating in the respective load range.

Parameter	Function Code	Register Address (Decimal)	Total number of bytes	Read/ Write	Scaling	Type	Eng Units	Range
Load Profile Monitor[a] (60Hz Log)	04	30337-30356	40 (Total)	Read Only				
Range #1 (0% to 10% load)	*04*	*30337-30338*	*4 each*		*10*	*U*	*min*	*0 to 200,000,000*
Range #2 (> 10% to 20% load)	*04*	*30339-30340*	*4 each*		*10*	*U*	*min*	*0 to 200,000,000*
Range #3 (>20% to 30% load)	*04*	*30341-30342*	*4 each*		*10*	*U*	*min*	*0 to 200,000,000*
Range #4 (> 30% to 40% load)	*04*	*30343-30344*	*4 each*		*10*	*U*	*min*	*0 to 200,000,000*
Range #5 (> 40% to 50% load)	*04*	*30345-30346*	*4 each*		*10*	*U*	*min*	*0 to 200,000,000*
Range #6 (> 50% to 60% load)	*04*	*30347-30348*	*4 each*		*10*	*U*	*min*	*0 to 200,000,000*
Range #7 (> 60% to 70% load)	*04*	*30349-30350*	*4 each*		*10*	*U*	*min*	*0 to 200,000,000*
Range #8 (> 70% to 80% load)	*04*	*30351-30352*	*4 each*		*10*	*U*	*min*	*0 to 200,000,000*
Range #9 (> 80% to 90% load)	*04*	*30353-30354*	*4 each*		*10*	*U*	*min*	*0 to 200,000,000*
Range #10 (> 90% to 100% load)	*04*	*30355-30356*	*4 each*		*10*	*U*	*min*	*0 to 200,000,000*

a. The Load Profile Monitor is a record consisting of percentile Ranges #1 through #10. Each range consists of 4 bytes designating the amount of time (in minutes) that the engine has been operating in the respective load range.

Appendix B: Modbus Register Data[1] - QSX15 Only

Parameter	Function Code	Register Address (Decimal)	Total number of bytes	Read/ Write	Scaling	Type	Eng Units	Range
Intake Manifold Absolute Pressure	04	30513	2	Read Only	64	S	In. Hg	13.2 to 132.3
Intake Manifold Temperature	04	30514	2	Read Only	64	S	°F	-40 to 302
Fuel Outlet Absolute Pressure	04	30515	2	Read Only	64	S	psia	0 to 315
Oil Temperature	04	30516	2	Read Only	64	S	°F	-40-302

Appendix C: Modbus Register Data[1] - QSK45 and QSK60 Only

Parameter	Function Code	Register Address (Decimal)	Total number of bytes	Read/ Write	Scaling	Type	Eng Units	Range
Blowby Flow	04	30529	2	Read Only	128	S	cfm	0 to 17.95
Intake Manifold Absolute Pressure	04	30530	2	Read Only	64	S	In. Hg	0 to 152.7
Intake Manifold Temperature	04	30531	2	Read Only	64	S	°F	-40 to 302
Coolant Absolute Pressure	04	30532	2	Read Only	64	S	psia	0 to 75
Fuel Pump Absolute Pressure	04	30533	2	Read Only	64	S	psia	0 to 375
Fuel Rail Absolute Pressure	04	30534	2	Read Only	64	S	psia	15 to 250
Fuel Inlet Temperature	04	30535	2	Read Only	64	S	°F	-40 to 302
Timing Rail Absolute Pressure	04	30536	2	Read Only	64	S	psia	0 to 375
Aftercooler Water Inlet Temperature	04	30537	2	Read Only	64	S	°F	-40 to 302

1. The maximum amount of data the ECM can return in response to a Read Input Registers request (Function Code 04) is 16 registers. The maximum length of an entire message must not exceed 256 bytes.

Katolight Service - Master Repair Manual - Page 3710

Appendix D - Modbus Bit Data[1]

Switch Name	Function Code	Coil/Input Address (Decimal)	Total number of bits	Read/Write	States
Shutdown Override	01 (Read) 05 (Write)	00001	1	Read / Write	Enabled = 1 Disabled = 0
Fault Acknowledge[a]	01 (Read) 05 (Write)	00002	1	Read / Write	Acknowledge = 1 Not Acknowledge = 0
Idle/Rated Switch State	02	10001	1	Read Only	Rated =1, Idle = 0
Run/Stop Switch State	02	10002	1	Read Only	Run =1, Stop = 0
Remote Emergency-Stop Input	02	10003	1	Read Only	Stop =1, Not Stop =0
Coolant Level Switch State[b]	02	10004	1	Read Only	Low =1, Normal =0
Common Shutdown Lamp/Relay Driver Command	02	10005	1	Read Only	Driver On =1 Driver Off =0
Common Warning Lamp/Relay Driver Command	02	10006	1	Read Only	Driver On =1 Driver Off =0
Fuel Shut-off Valve Driver State	02	10007	1	Read Only	Driver On =1 Driver Off =0
Operator Interface Mode	02	10008 - 10011	4	Read Only	See Table Below

a. The Fault Acknowledge command is a momentary signal and should be held in the "acknowledge" state for no longer than 0.5 seconds when acknowledging a fault condition.

b. The Coolant Level Switch is to be supplied by the customer. The control system must be set -up to read the Coolant Level Switch signal. See the ***Customer Supplied Coolant Level Switch*** section on page 101 for further details.

Bit No.	B	A	9	8
Off	0	0	0	0
Ready	0	0	0	1
Fault Flashout	0	0	1	0
Non-Running Test	0	0	1	1
Starting	0	1	0	0
Idle	0	1	0	1
Rated	0	1	1	0
Normal Stop	0	1	1	1
Emergency Stop	1	0	0	0
Watchdog Test	1	0	0	1

1. The maximum amount of data the ECM can return in response to: i) a Read Coil Status request (Function Code 01) is 32 coils ii) a Force Single Coil request (Function Code 05) is 1 coil, or iii) a Read Input Status request (Function Code 02) is 32 inputs. The maximum length of an entire message must not exceed 256 bytes.

Katolight Service - Master Repair Manual - Page 3711

Appendix E - Supported Modbus Exception Codes

Code	Name	Description
01	Illegal Function	The function code received is not valid
02	Illegal Data Address	The data address received in the query is not a valid address
03	Illegal Data Value	A value contained in the query data field is not a valid value for the slave

Appendix F - Supported Modbus Diagnostics

Sub-Function Code	Name	Description
00	Return Query Data	The data passed in the query data field is to be returned (looped back) in the response. The entire response message should be identical to the query.
01	Restart Communications Option	The slave's peripheral port is to be initialized and restarted, and all of its communications event counters are to be cleared. If the port is currently in Listen Only Mode, no response is returned. If the port is not currently in Listen Only Mode, a normal response is returned.
04	Force Listen Only Mode	Forces the ECM into Listen Only Mode. This isolates it from the other devices on the network, allowing them to continue communicating without interruption from the addressed slave. No response is returned. The only function that will be processed after this mode is entered will be the Restart Communications Option function (function code 08, subfunction 01)
10	Clear Counters and Diagnostic Register	Clears all counters and the diagnostic register.
11	Return Bus Message Count	The response data field returns the quantity of messages that the slave has detected on the communications system, since its last restart, clear counters operation, or power up.
12	Return Bus Communication Error Count	The response data field returns the quantity of CRC errors encountered by the ECM since the its last restart, clear counters operation, or power-up.
13	Return Bus Exception Error Count	The response data field returns the quantity of Modbus exception responses returned by the ECM since the its last restart, clear counters operation, or power-up.
14	Return Slave Message Count	The response data field returns the quantity of messages addressed to the ECM, or broadcast, that the ECM has processed since its last restart, clear counters operation, or power-up.
15	Return Slave No Response Count	The response data field returns the quantity of messages addressed to the ECM for which it did not return a response (neither a normal response nor an exception response), since its last restart, clear counters operation, or power-up

Appendix G - Electronic Device Usage

Device Type/Description	QSK45/60	QSX15	Comments
Sensors			
Aftercooler Water Inlet Temperature	X		Provisions in ECM H/W for the QSX15
Ambient Air Pressure	X	X	
Blowby flow	X		
Coolant Level	X	X	**INSTALLATION OF THE COOLANT LEVEL SENSOR IS MANDATORY.** Provisions are in QSX15 and QSK45/60 wiring harnesses to connect customer supplied sensor.
Coolant Pressure	X		
Coolant Temperature	X	X	
Engine Speed Sensor (ESS)/ Engine Position Sensor (EPS)			
Crankshaft ESS		X	
Camshaft EPS		X	
Flywheel (Ring Gear) ESS	X		Sensor has redundant main/backup coils (both are wired to the ECM)
Fuel/Timing Pressure			
Fuel Outlet Pressure		X	
Fuel Pump Pressure	X		
Fuel Rail Pressure	X		
Timing Rail Pressure	X		
Fuel Temperature	X		
Intake Manifold Pressure	X	X	QSX15 uses combination pressure/temp sensor
Intake Manifold Temperature	X	X	QSX15 uses combination pressure/temp sensor
Oil Pressure	X	X	QSX15 uses combination pressure/temp sensor
Oil Temperature		X	QSX15 uses combination pressure/temp sensor
Switch Inputs			
Run/Stop	X	X	
Idle/Rated	X	X	
Crank	X	X	
Alternate Frequency	X	X	
Diagnostic Mode	X	X	
Fault Acknowledge	X	X	
Control/Service/Safety Discrete Inputs			
Emergency Stop (Local & Remote)	X	X	
Run Relay Contact Status	X	X	
Crank (Slave) Relay Contact Status	X	X	
Backup Start Disconnect Status	X	X	
Diagnostic Mode Enable	X	X	Two one-pin connectors (opposite gender) are plugged together to enable Diagnostic Mode

QSX15, QSK45, QSK60 Generator Drive Control System

Device Type/Description	QSK45/60	QSX15	Comments
Adjustable Inputs			
Governor Gain	X	X	
Speed Droop	X	X	
Frequency	X	X	
Speed Bias/Synchronizing Inputs			
+/- 0.2V Signal	X	X	For use with Barber-Colman compatible governing and load share equipment
+/- 2.5V Signal	X	X	For use with Woodward compatible governing and load share equipment
Drivers			
Lamp/Relay Drivers			
Common Warning	X	X	
Common Shutdown	X	X	
High Engine Temperature	X	X	
Low Oil Pressure	X	X	
Overspeed	X	X	
Pre-High Engine Temperature	X	X	
Pre-Low Oil Pressure	X	X	
Fail-to-Start	X	X	
Meter Drivers			
Engine Speed	X	X	
Oil Pressure	X	X	
Coolant Temperature	X	X	
Actuator Drivers			
HPI-TP Fuel System			
Fueling Actuator #1 (Front)		X	
Fueling Actuator #2 (Rear)		X	
Timing Actuator #1 (Front)		X	
Timing Actuator #2 (Rear)		X	
HPI-PT Fuel System			
Fuel Rail Actuator	X		
Fuel Pump Actuator	X		
Timing Rail Actuator (1)	X		
Timing Rail Actuator (2)	X		
Fuel Shut-Off Valve Solenoid	X	X	
Starter Control (Crank Coil Relay)	X	X	
Miscellaneous Outputs			
Battery Charging Alternator Field Flash Out	X	X	
Serial Communications Datalinks			
RS-232 Datalink (Service Tool Interface)	X	X	
MODBUS RS-485 Datalink (Customer Interface)	X	X	

Appendix H - Keyed Connector Backshell Assembly Instructions

Each keyed connector kit includes the following parts:

- Keyed Backshell
  (2 halves – includes color-coded connector identification label on each half)
- Backshell Fastening Screws (Qty. 2)
- Thumbscrews (Qty. 2)
- Wiring Harness Strain Relief Clamp (Qty. 1)
- Strain Relief Clamp Fastening Screws (Qty. 2)
- Connector Grommet Seal (Qty. 1)
- Connector Terminals (Qty. 30)
- Sealing Plugs (Qty. 30)
- Terminal Insertion/Extraction Tool (Qty. 1)

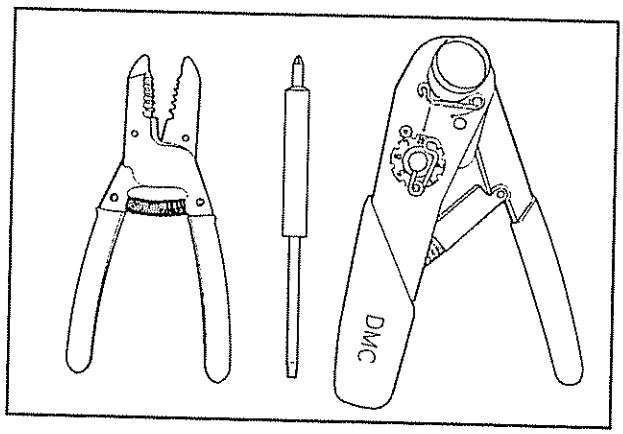

Required tools (not included in kit):

- Wire Strippers
- Standard Screwdriver
- Terminal Crimp Tool (and required accessories, i.e. positioner)

Following are the instructions explaining how to assemble the 25-position connector together with the wiring harness and the keyed connector backshell.

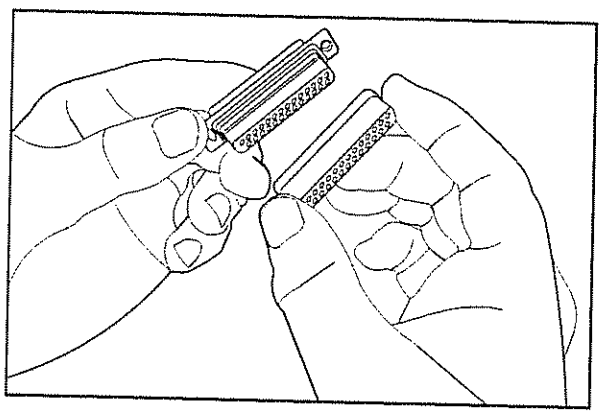

1. Position the connector grommet seal on the backside of the connector (the side that the harness conductors will be terminated to at the connector).

2. Strip 4.3 to 5.1 millimeters (0.17 to 0.20 inches) of insulation from the ends of the wire harness conductors.

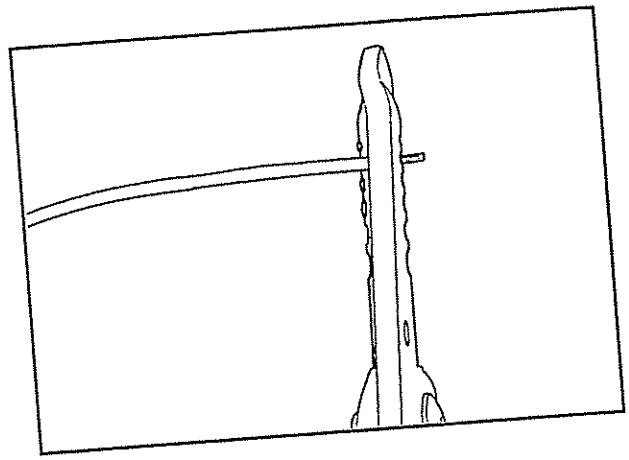

3. Using the appropriate terminal crimping apparatus, crimp the connector terminals onto the stripped, bare ends of the wire harness conductors. Use a crimp tool with frame style M22520/2-01 per MIL-C-22520, or equivalent. A hand-held or pneumatic crimp tool can be purchased from Daniels Manufacturing Corporation (P/N AFM8 for hand-held, P/N WA27F for pneumatic) along with the terminal positioner (Part No. K13-1 for use with 0.5 mm^2 [20 AWG] terminals).

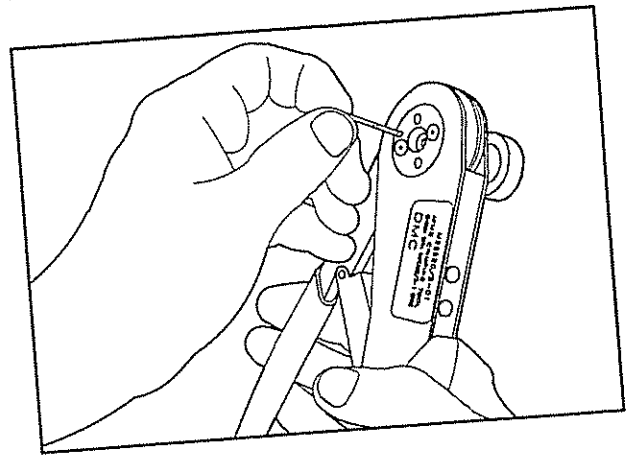

> ***NOTE:*** *Carefully read and follow all of the manufacturer's instructions for the specific crimp tool being used for this procedure. The AFM8 crimp tool from Daniels Manufacturing Corporation requires that the correct positioner be used and that the crimp tool selector knob is adjusted to the correct setting for the terminal size being used.*

4. Once all conductors to be used are crimped onto connector terminals, insert each terminal into the correct cavity of the connector. Because the grommet seal is covering the connector, each terminal will first have to be inserted through the corresponding cavity of the grommet seal. The terminal can be installed by using a small amount of pressure to push the terminal into the connector cavity. There will be a quiet "click" or "snap" sound when the detents in the connector cavity engage, indicating that the terminal is properly seated in the connector cavity.

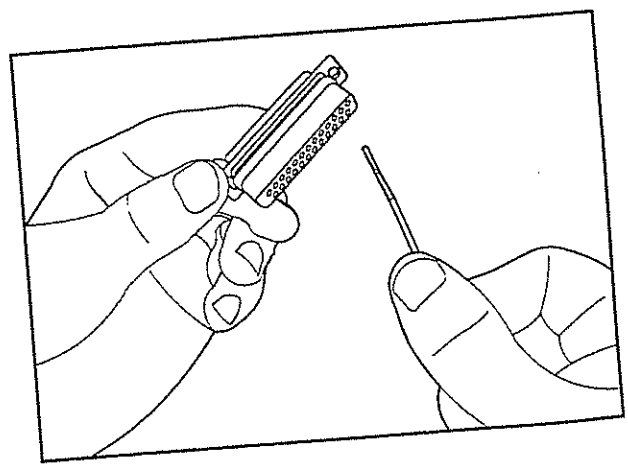

> ***NOTE:*** *If for any reason a terminal must be extracted from a connector cavity after it has already been installed, use the extraction tool provided in the kit to do so. The terminals are a rear-side removal type.*

5. The grommet seal must have a sealing plug inserted in the unpopulated cavity positions in order to provide adequate protection against debris and water intrusion. Insert a sealing plug into each open cavity position on the back (exposed) side of the grommet.
6. Ensure that all terminals are properly seated into each of the connector cavities. Applying a small amount of force to try and pull the harness conductor attached to the terminal out of the connector cavity can check this. If the terminal is improperly seated, it should easily pullout of the connector cavity. If the terminal is properly seated, there should be resistance when pulling on the conductor and the terminal will remain seated in the connector cavity.

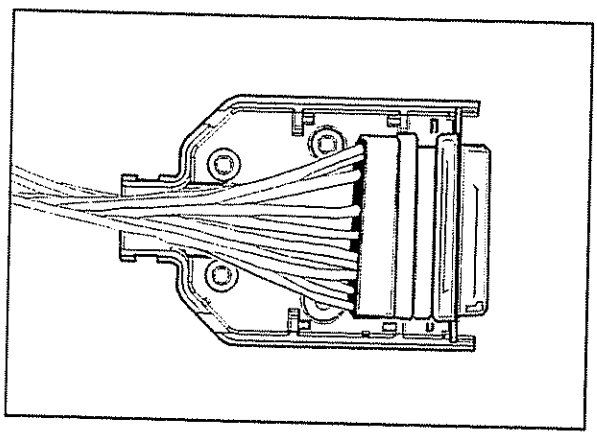

7. When all harness conductors have been inserted into the connector and properly seated, place the connector into one half of the keyed backshell, laying the harness bundle as shown in the diagram.

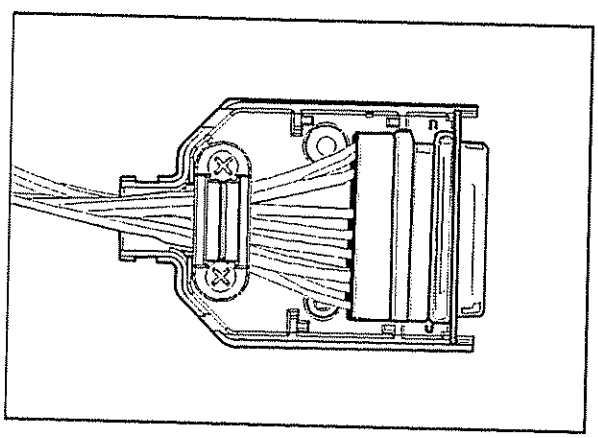

8. Place the strain relief clamp over the harness bundle and attach it to the backshell half using the two strain relief clamp screws provided.

9. Place the two thumbscrews into the proper locations of the backshell half.

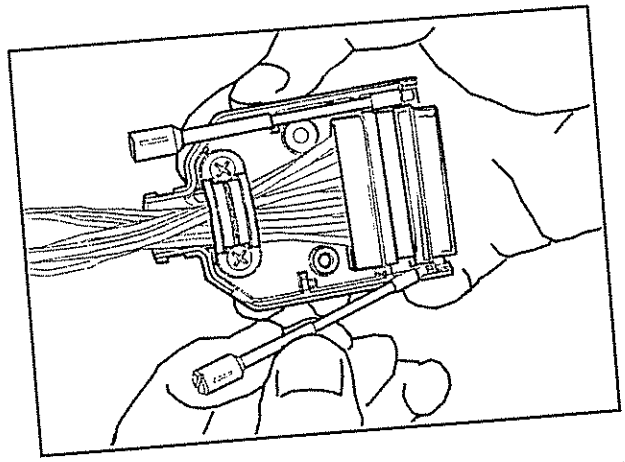

10. Finally, place the second half of the backshell in place, fitting it to the first half of the backshell to cover the exposed grommet seal and harness strain relief clamp and fasten the two backshell halves together using the two backshell fastening screws provided.

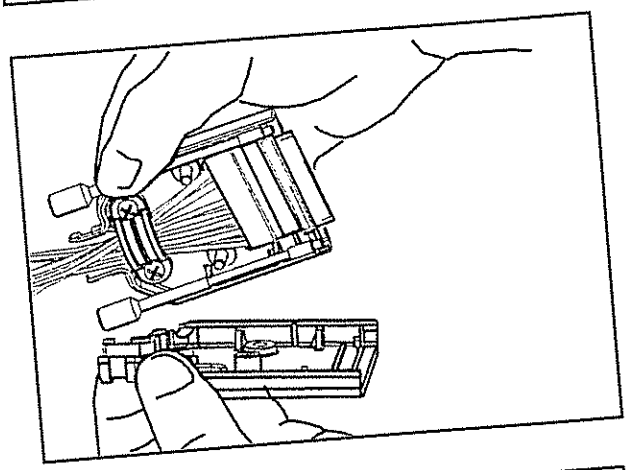

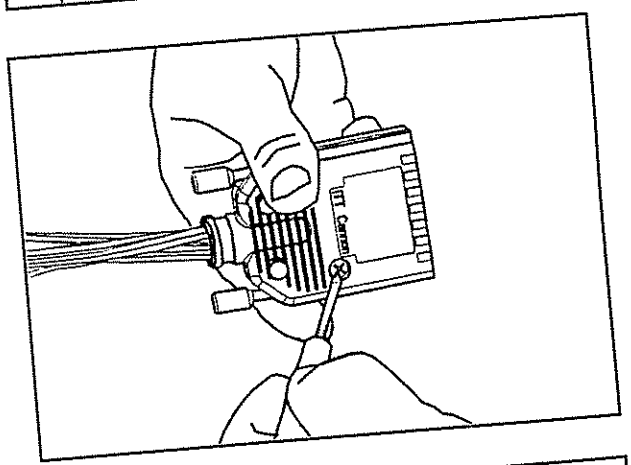

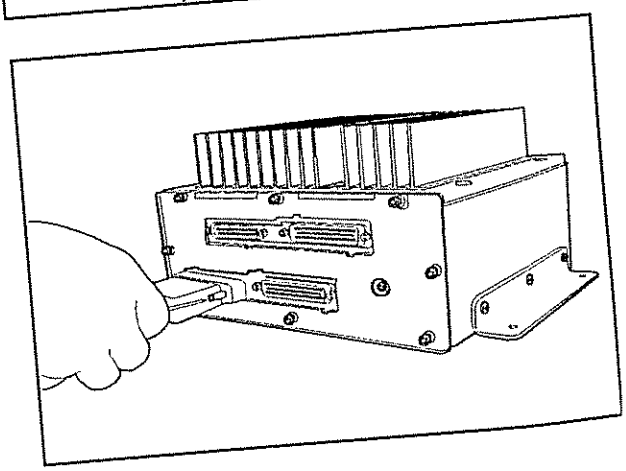

NOTE: *When attaching the keyed connectors to the ECM, the thumbscrews should be torqued to 0.79 - 0.90 N m (7-8 in.-lbs.).*

Appendix I - Component Manufacturers' Addresses

NOTE: The following list contains addresses and telephone numbers of suppliers of accessories used on Cummins engines. Suppliers can be contacted directly for any specifications **not** covered in this manual.

Alternators

Robert Bosch Ltd.
P.O. Box 98
Broadwater Park
North Orbital Road
Denham
Uxbridge
Middlesex UD9 5HG
England
Telephone: 01895-833633

Butec Electrics
Cleveland Road
Leyland
PR5 1XB
England
Telephone: 01744-21663

C.A.V. Electrical Equipment
P.O. Box 36
Warple Way
London
W3 7SS
England
Telephone: 01-743-3111

A.C. Delco Components Group
Civic Offices
Central Milton Keynes
MK9 3EL
England
Telephone: 01908-66001

C.E. Niehoff & Co.
2021 Lee Street
Evanston, Il 60202
Telephone: (708) 866-6030

Delco-Remy America
2401 Columbus Avenue
Anderson, In 46018
Telephone: (317) 646-3528

Leece-Neville Corp.
400 Main Street
Arcade, NY 14009
Telephone: (716) 482-1700

Coolant Level Switches

Robertshaw Controls Company
P.O. Box 400
Knoxville, TN 37901
Telephone: (216) 885-1773

Connnector Contact Crimp Tools & Accessories

Daniels Manufacturing Corp.
526 Thorpe Rd.
Orlando, FL 32824
Telephone: (407) 855-6161

Connnector Contact Insertion & Removal Tools

Aiconics, Inc.
13100 Kirkham Way #206
Poway, CA 92064
Telephone: (858) 513-2115

Electric Starting Motors

Butec Electrics
Cleveland Road
Leyland
PR5 1XB
England
Telephone: 01744-21663

C.A.V. Electrical Equipment
P.O. Box 36
Warple Way
London
W3 7SS
England
Telephone: 01-743-3111

A.C. Delco Components Group
Civic Offices
Central Milton Keynes
MK9 3EL
England
Telephone: 01908-66001

Delco-Remy America
2401 Columbus Avenue
Anderson, IN 46018
Telephone: (317) 646-3528

Leece-Neville Corp.
400 Main Street
Arcade, NY 14009
Telephone: (716) 482-1700

Nippondenso Inc.
2477 Denso Drive
P.O. Box 5133
Southfield, MI 48086
Telephone: (313) 350-7500

Electronic Switches

Cutler-Hammer Products
Eaton Corporation
4201 N. 27th Street
Milwaukee, WI 53216
Telephone: (414) 449-6600

Electronic Switches (continued)

Cutler-Hammer Products
Eaton Corporation
4201 N. 27th Street
Milwaukee, WI 53216
Telephone: (414) 449-6600

Gauges

A.I.S.
Dyffon Industrial Estate
Ystrad Mynach
Hengoed
Mid Glamorgam
CF8 7XD
Telephone: 01443-812791

Yokogawa Electric Corporation
9-32
Nakacho 2-chome Musashino-shi
Tokyo, 180-8750
Japan
Telephone: 81-422-52-5535

Grasslin U.K. Ltd.
Vale Rise
Tonbridge
Kent
TN9 1TB
England
Telephone: 01732-359888

Icknield Instruments Ltd.
Jubilee Road
Letchworth
Herts
England
Telephone: 04626-5551

Superb Tool and Gauge Co.
21 Princip Street
Birmingham
B4 61E
England
Telephone: 021-359-4876

Gauges (continued)

Kabi Electrical and Plastics
Cranborne Road
Potters Bar
Herts
EN6 3JP
England
Telephone: 01707-52444

Datcom Instruments
P.O. Box 128
East Petersburg, PA 17520
Telephone: (717) 569-5713

Rochester Gauges, Inc.
11616 Harry Hines Blvd.
P.O. Box 29242
Dallas, TX 75229

Crompton Instruments Ltd.
Freebournes Road
Withan Essex
CM8 3AH
England
Telephone: 44(0) 1376 512601

In-Line Connectors

Pioneer-Standard Electronics, Inc.
5440 Neiman Parkway
Solon, OH 44139
Telephone: (216) 349-1300

Deutsch
Industrial Products Division
37140 Industrial Avenue
Hemet, CA 92343
Telephone: (714) 929-1200

Ladd Industries, Inc.
4849 Hempstead Station Drive
Kettering, OH 45429
Telephone: (937) 438-2646
(800)223-1236

Load Share/ Synchronizing Controls

Woodward Governors Ltd.
P.O. Box 15
663 / 664 Ajax Avenue
Slough
Bucks
SL1 4DD
England
Telephone: 01753-26835

Load Share/ Synchronizing Controls (continued)

Woodward Governor Co.
P.O. Box 1519
Fort Collins, CO 80522
Telephone: (303) 482-5811
(800) 523-2831

Barber Colman Co.
1354 Clifford Avenue
Loves Park, IL 61132
Telephone: (815) 637-3000

United Technologies
Diesel Systems
1000 Jorie Blvd.
Suite 111
Oak Brook, IL 69521
Telephone: (312) 325-2020

Appendix J - Operating, Electrical & Environmental Specifications

Operation

Governor Mode	Isochronous to 10% Droop
Governor Gain Adjust	0.05 to 10.00
Frequency Adjust Range	±9Hz (±3Hz Using External Pot, ±6Hz Using InPower™)
Speed Bias Reference Voltage	+5VDC (±2%); $50mV_{(p-p)}$ Max. Ripple
±2.5V Speed Bias Signal	5.0V ± 2.5V (±3Hz full scale)
±0.2V Speed Bias Signal	5.0V ± 0.2V (±7.38Hz full scale)
Minimum Mag Pickup Speed Signal Input	$1.5V_{p-p}$ @ 200 rpm, $6.5V_{p-p}$ @ 1800 rpm

Power

Nominal Operating Voltage	+24VDC
Operating Voltage Range	+18 to +35VDC (+10VDC Minimum during engine starting)
Maximum Continuous Voltage	+35VDC
Ground Polarity	Negative Ground (Convertible to Positive or Isolated Ground; See the ***Positive/Isolated Grounding*** section on page 18 for further details)
Nominal Operating Current	3.5A @ +24VDC (HPI-PT ECM); 5.8A @ +24VDC (HPI-TP ECM)
Maximum Operating Current	6.0A @ +24VDC (HPI-PT ECM); 7.2A @ +18VDC (HPI-TP ECM)
Sleep Mode Operating Current	60mA (nominal)
Ready Mode Operating Current [ECM On & Engine Not Running]	350mA (nominal)

Environmental

Ambient ECM Housing Operating Temp.	-40° to158°F [-40° to 70°C]
Ambient ECM Heat Sink Operating Temp.	-40° to 140°F [-40° to 60°C]
Maximum ECM Heat Sink Surface Temperature	167°F [75°C] @ 140° F [60°C] ambient air temperature
Storage Temperature	-67° to 176°F [-55° to 80°C]
Vibration Limits	20-100Hz, 93.6mm/sec; 100-200Hz, 6g
Relative Humidity	0-95% Non-Condensing
Salt Fog Resistant	150 Hours, 5% salt @ 95°F
Radiated Immunity	per ENV50140, 10V/m
Conducted Susceptibility	per ENV 50141, 10V/m
Radiated Emissions	per EN55011
Electrical Fast Transient (EFT)	per EN61000-4-4 (Level 3)
Mounting (Off engine)	IP53/NEMA-3R (with connectors facing down)

Physical

Dimensions (Including Heat Sink; excluding mounting brackets)	228.0 mm X 182.5 mm X 129.7 mm (8.98 in. X 7.19 in. X 5.11 in.)
Weight	4.15 kg [9.16 lbs.]
Housing Metal	Sheet Steel
Heat Sink Metal	Aluminum

Protection

Voltage Surge Protection	per EN61000-4-5 and +63 V DC supply surge voltage
Reverse Polarity Protection	+28VDC Maximum
High Voltage Protection	+35VDC Maximum Continuous
Electrostatic Discharge (ESD)	per EN61000-4-2 (8kV direct contact, 15kV air discharge)

Standards Compliance

CE	Low Voltage Directive (73/23/EEC), EN50081-2, EN50082-2
NEMA	3R (ECM Housing)
IEC	IP53 (ECM Housing), IP54 (Harness Inline Connectors)
CSA[1]	C282-M (1989)
NFPA[1]	76A

Electrical Interface Characteristics

Lamp/Relay Driver Supply

Supply Voltage	+24VDC Nominal, +35VDC Maximum
Maximum Supply Current	1.5A
Maximum Supply Impedance	0.5Ω

Lamp/Relay Drivers

Driver Type	Low-Side (switched GND/Open)
Driver Voltage Rating	+24VDC Nominal, +35VDC Maximum
Maximum Sink Current (Driver On)	200mA
Maximum Driver Impedance (Driver On)	1Ω
Open Circuit Fault Current (Driver On)	< 2mA (See ***Alarm Lamp/Relay Drivers*** section on page 83 for further details.)

1. The Generator-Drive Control System is suitable for use with generator products intended to comply with the specified standards.

Electrical Interface Characteristics (Continued)

Analog Meter Drivers

Output Current ..... 0 to 1 mA
Maximum Meter Load Impedance 100Ω
Output Accuracy (@ 100Ω meter load)..... < ±0.5% of Full Scale
Output Resolution (@ 100Ω meter load) ..... < 0.5% of Full Scale

Analog (Adjustable) Inputs

Nominal Input Voltage Adjustment Range ..... 0 to 3.177VDC
Maximum Input Voltage 5VDC
Maximum Potentiometer Resistance ..... 5KΩ ± 5%

Remote Potentiometer Specifications (Recommended)

Resistance ..... 5KΩ ± 5%
Linearity 0.25%
Travel ..... 360° x 10
Power Rating ..... 2.5mW minimum @ 70 °C [158 °F]
Insulation Rating ..... 1000MΩ @ 500VDC
Dielectric Strength..... 100V RMS
Operating Temperature..... -55° to 105°C [-67° to 221 °F]

Speed (Frequency) Bias Reference & Voltage Supply

5VDC Reference Voltage..... +5VDC ± 2%; 50mV$_{p-p}$ Maximum ripple voltage; 25mA Maximum Current
8VDC Supply Voltage ..... +8VDC ± 5%; 50mV$_{p-p}$ Maximum ripple voltage; 15mA Maximum Current

Switch Inputs

Maximum Source Current..... 100mA (when input is connected to signal GND return)
Input Voltage(measured @ signal input)..... +5VDC when ECM is in Sleep Mode or B+ (approx. 24VDC) when ECM is not in Sleep Mode
Switching Threshold..... +2.5VDC

Appendix K - Electrical Symbols

Name		Symbol
Battery		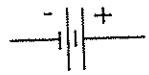
Alternator (Frequency Source)		
Resistor		
Variable Resistor (Potentiometer)	3 Terminal Device	
	2 Terminal Device	
Terminal Strip		
Switches:		
	(N.O.) Normally Open	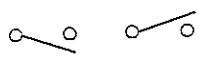
	(N.C.) Normally Closed	
	Transfer	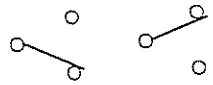
	Transfer 3 position	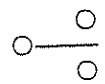
Relay Contact:		
	(N.O.) Normally Open	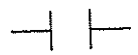
	(N.C.) Normally Closed	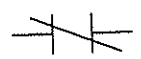

Name	Symbol
Transfer	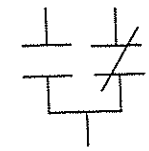
Capacitor	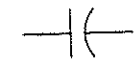
Fuse	
Circuit Breaker	
Jumper Wire	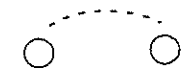
Coil	
Magnetic Core	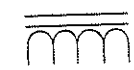
Transformer	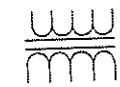
Variable Reluctance Magnetic Pickup	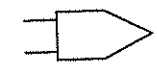
Female Contact	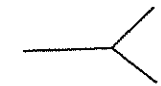
Male Contact	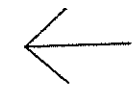

Name	Symbol
Shields:	
Shielded Wire	
Shielded Pair	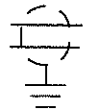
Crossing of Conductors (wires) not Connected	
Junction of Connected Conductors (wires)	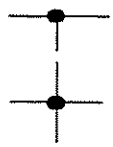
Grounded	
Chassis or Frame Connection	
Conducting connection to a chassis or frame, of equivalent chassis connection of a printed wiring board. The chassis or frame (or equivalent chassis connection of a printed wiring board) may be at a different potential than the earth or structure in which this chassis or frame (or printed wiring board) is mounted.	
Direct Conducting Connection to Circuit Return	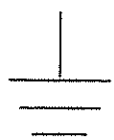
Conducting connection to a structure that services a function similar to that of an earth ground (that is, a structure such as a frame of an air, space or land vehicle that is not conductively connected to earth.)	

Name	Symbol
Earth Safety Ground	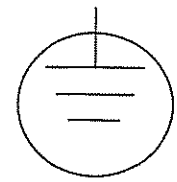
** This symbol may be used in place of symbol for direct conducting connection to circuit return to indicate a ground connection having a specified protective function (e.g., for protection against electrical shock in case of a fault).	
** Ref. Electrical and Electronics Graphic Symbols and abbreviated name.	

Glossary of Power Terms

A.C. -- See Alternating Current.

Alternating Current -- Electrical current which repeatedly varies from zero to a positive maximum value to zero to a negative maximum value and back to zero at a periodic rate. Since the applied voltage continually reverses polarity, the resultant current flow alternates in direction within the circuit.

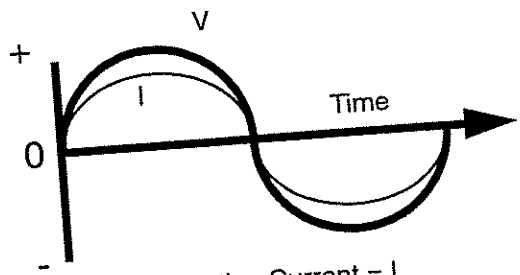

Alternating Current = I
Applied Voltage = V

AMP -- An abbreviation for the term Ampere.

Ampere -- The unit of measure of electrical current flow. One ampere of current will flow when one volt of electrical potential is applied across one ohm of resistance.

Auto-Transformer -- A transformer of single coil construction in which both the primary and secondary connections are made on the same coil but use different taps.

Bi-State -- Refers to the type of eletrical device, or the signal supplied by such a device, that has two discrete and mutually exclusive states. For example, a two-position toggle switch is a bi-state switching device that is either 'open' or 'closed'.

B- -- Symbol used to designate the negative polarity of a D.C. voltage supply.

B+ -- Symbol used to designate the positive polarity of a D.C. voltage supply.

Capacitance -- The property of a device which resists changes in voltage. In an A.C. circuit, a capacitive load will cause the voltage to lag behind the current flow. Stated more conventionally, the current leads the applied voltage. A capacitive load is, therefore, a leading power factor load (see Power Factor).

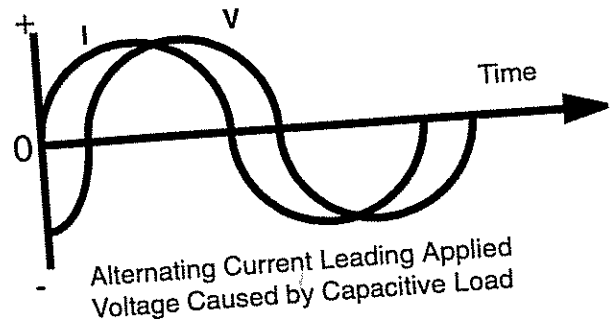

Alternating Current Leading Applied Voltage Caused by Capacitive Load

Capacitor -- A device possessing the property of capacitance. A typical capacitor consists of two conducting surfaces separated by an insulating material. A capacitor stores electrical energy, blocks the flow of D.C. and permits the flow of A.C. to a degree largely dependent on the capacitance and the frequency of the applied A.C.

Circuit -- An electrical path through which an electric current may flow from a voltage supply to a load and return. A closed or complete circuit is one where current is flowing. An open circuit is where the path has been disrupted, such as an open switch or circuit breaker, thus stopping current flow.

Circuit Breaker -- A protective device for opening a circu where current flow exceeds a predetermined value.

Circulating Current -- Also called Cross Current. Curre which flows between paralleled generators, most appare with no external load on the paralleled generators. Circul ing current is caused (1) by unequal excitation of the gen ators (reactive current, which may be reduced by changi the voltage regulator adjustment or connections); and by unequal power from the engines that are driving generators real current (and power) which can be eli nated by governor adjustments.

Conductor -- A wire cable, bus, or other device intende distribute current from the supply to the load. Technical conductor is any device which will permit the flow of rent.

Contactor -- A device for opening and closing an electric circuit. Contactors are normally used in motor circuits where large amounts of current are controlled.

Cross Current -- See Circulating Current.

Cross Current Compensation -- A term, no longer approved, for a circuit arrangement that made paralleled generators share the reactive component of load current in proportion to the generator ratings. The circuit arrangement could also essentially eliminate the reactive component of circulating current flowing between paralleled generators (See Reactive Differential (Cross Current) Compensation and Reactive Droop Compensation).

Current (Electrical, Symbol I) -- The rate of transfer of electricity from one point to another. Current is usually a movement of electrons, but may also be a movement of positive ions, negative ions, or holes. Current is usually measured in amperes.

Cycle 00 -- A complete set of events before repetition occurs. In alternating current or voltage, a cycle starts at zero, continues to a maximum positive value returns to zero, continues to a maximum negative value, and is completed at zero.

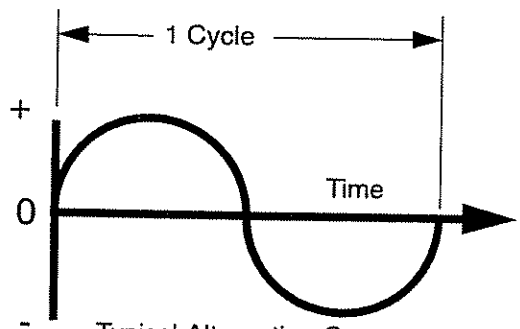

Typical Alternating Current
or Voltage Cycle

D.C. -- See Direct Current.

Diode -- A two terminal solid-state device which permits current to flow in one direction, but not in the other. In alternating current circuits, a diode will permit one half cycle to flow but will resist the flow of the opposite half cycle of current. Thus, alternating current is converted to direct current by a diode.

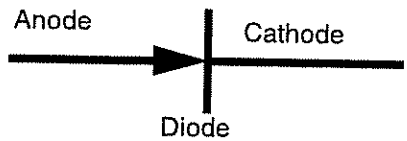

Diode

Direct Current (D.C.) -- An electric current that flows in one direction only. Conventional direct current is defined as flowing from positive to negative in the circuit outside the source (example: a battery or combination of diodes). Conventional current flows in the direction of the arrow through a diode. Electron flow and U.S. Navy designated current flow in the opposite direction.

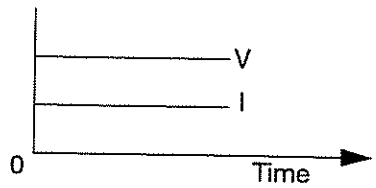

Direct Current I
Applied Voltage V

Distribution Panel -- A control panel containing circuit breakers, transfer switches, and other control devices which distribute the electrical power, such as from a generator set to the loads.

Double Pole Switch -- A switch which has two sets of contacts which operate on two independent circuits at the same time.

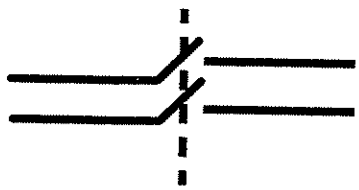

Typical Double Pole Switch Shown as a
Single Throw Type in the "Off" Position

E -- Symbol used to represent electrical potential (voltage).

Earth Ground -- An intentional connection made between the earth and the metallic frame of electrical equipment as a means to eliminate possible voltage hazards to personnel. Earth Ground also serves, in some cases, to reduce electrical interference in sensitive circuits such as television and radio equipment.

EMI -- An abbreviation for the term electromagnetic interference which is sometimes caused by SCR type devices and evident in radio and television operation.

Energy -- The capability of performing work.

Frequency -- The number of complete cycles of alternation current per unit of time. Typically, frequency is expressed in cycles per second or Hertz (HZ).

Frequency Droop -- A decrease in steady state frequency output of a generator caused by an increase in load. This decrease in frequency from the no load frequency is expressed as a percentage of the full load frequency or:

$$\%F_{Droop} = \frac{(F_{NL} - F_{FL}) \times 100}{F_{FL}}$$

Where: $\%F_{Droop}$ = *Percent Frequency Droop*
F_{NL} = *No Load Frequency*
F_{FL} = *Full Load Frequency*

A three percent frequency droop may be used to provide governor stability and for load sharing between paralleled generator sets.

Frequency Meter -- An instrument deigned to measure the frequency of an alternation current system.

Gain -- The increase in signal power that is produced by an amplifier, usually given as the ratio of output to input voltage, current, or power. In generator set systems, a low gain setting on the electric governor or voltage regulator provides a relatively small signal to correct variations of frequency or voltage. The frequency and/or voltage may wander or be slow in recovering to stable conditions after a load change. A high gain setting provides a relatively large signal to correct variations of frequency and/or voltage. If the gain is set too high, the electric governor or voltage regulator may over-correct. This may produce unacceptable hunting of the frequency and/or voltage.

Gate -- The third terminal of an SCR to which a voltage must be applied before the SCR will conduct.

Governor -- A device which controls engine speed and thus the generator output frequency.

Ground -- A connection, either accidental or intentional, between an electrical potential and the earth or some conducting body serving in place of the earth.

Heat Sink -- A device which absorbs heat from electrical devices such as diodes and SCR's and dissipates the heat to the surrounding air.

Hertz -- A term equivalent to cycles per second (See Frequency).

Hunting -- Oscillation in frequency or in voltage where steady state conditions are not reached, particularly after a load transient change.

I -- Symbol used to represent current.

Impedance -- The opposition to the flow of alternating current.

Induced Voltage -- The voltage which is produced by relative motion between a wire and a magnetic field.

Inductance -- The property of a device which resists changes in current. In an A.C. circuit, an inductive load will cause the current to lag behind the applied voltage. Stated more conventionally, the current lags the applied voltage. An inductive load is therefore a lagging power factor load (see Power Factor).

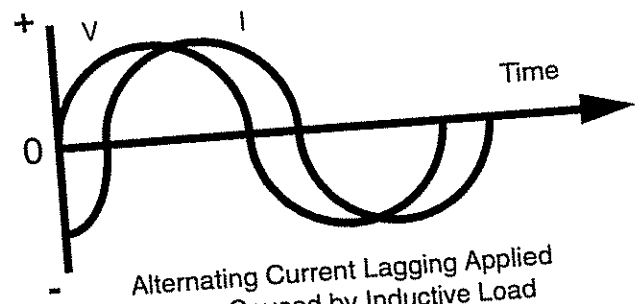

Alternating Current Lagging Applied Voltage Caused by Inductive Load

Inductor -- A device possessing the property of inductance. An inductor stores electrical energy, passes D.C., and opposes the flow of A.C. to a degree largely dependent on the inductance and the frequency of the applied A.C. A typical inductor consists of a coil of wire.

In Phase -- Alternating currents or voltages are in phase with respect to each other if they cross through zero and reach their positive and negative maximum values together.

Insulation -- A non-conductive material such as rubber or plastic intended to prevent current from flowing. Technically, insulation is any material which stops the flow of current.

Isochronous -- As it applies to engine governors, maintaining constant steady state speed regardless of the load within the rating of the engine. Thus, a generator set is said to be isochronous if the frequency remains the same regardless of load.

Normally Closed (Symbol N.C.) -- As applied to a magnetically operated device such as a valve or the contacts of a relay, Normally Closed indicates that the valve or the relay contacts are closed when no power is supplied to the operating magnet.

Normally Open (Symbol N.O.) -- As applied to a magnetically operated device such as a valve or the contacts of a relay, Normally Open indicates that the valve or the relay contacts are open when no power is supplied to the operating magnet.

Ohm -- The unit of measure of electrical resistance. One ohm of resistance will allow a current of one ampere to flow with an applied potential of one volt.

Ohmmeter -- An instrument for measuring electrical resistance.

Ohm's Law -- A fundamental law expressing the relationship between voltage, current, and resistance in electrical circuits. The law states that E = IR or voltage is equal to current times resistance.

Open Circuit -- 1) A circuit that does not provide a complete path for the flow of current. 2.) A condition of an electrical circuit caused by the breaking of continuity of one or more conductors of the circuit; often an undesired condition. 3) An arrangement of conductors and equipment that depends upon lack of continuity for operation, as open-circuit telegraphy; a circuit in which continuity is incomplete or interrupted.

Oscillogram -- The permanent record produced by an oscillograph, or a photograph of the trace produced by an oscilloscope.

Oscillograph -- A measurement device for determining waveform by recording the instantaneous values of a quantity such as voltage as a function of time.

Oscilloscope -- An instrument primarily for making visible the instantaneous value of one or more rapidly varying electrical quantities as a function of time or of another electrical or mechanical quantity.

Oscilloscope Dual Beam -- An oscilloscope in which the cathode-ray tube produces two separate electron beams that may be individually or jointly controlled.

Parallel Connection -- An electrical connection in which the input of one element is connected to the input of another element. The output connections are similarly connected together thus providing two or more paths for current to flow.

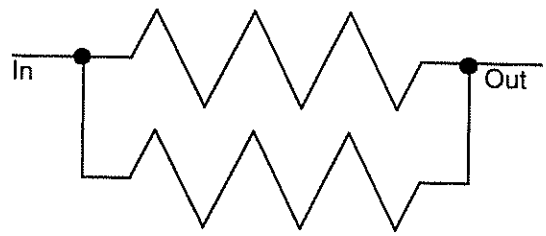

Parallel Connection

Parallel Operation -- The method by which two or more generators having the same voltage and frequency characteristics are connected to a common load.

Permanent Magnet Generator -- A generator which uses permanent magnets to create a magnetic field. As applied to Cummins Generators; a permanent magnet generator, within the main generator, supplies the power to the voltage regulator which in turn supplies the power to the exciter field. The permanent magnet generator still supplies power during a short circuit of the main generator. This permits the main generator to sustain high short circuit currents. The output of the permanent magnet generator is electrically isolated from the main generator output and is not adversely affected by main generator output waveform distortion such as from SCR type loads.

PMG -- See Permanent Magnet Generator.

Polarity -- An electrical term which indicates the direction in which current flows in a conductor. In a direct current system, current flows in the same direction. In an alternating current system, current changes direction as the polarity of the A.C. voltage source changes.

Potential -- Another term to indicate voltage.

Potential Difference -- The difference in voltage between two points in a circuit.

Power -- Defined as the rate of performing work. Mechanical power is measured in horsepower or kilowatts. Electrical power is measured in kilowatts.

Power Factor -- The ratio of the true power (KW) requirements of a load to the apparent power (KVA) requirements of a load. The combined loads applied to a power source may have a resistive, capacitive, or inductive effect.

Resistive loads such as incandescent lighting or resistive heating elements cause no shift in the voltage/current wave forms and are, therefore, unity (1.0) power factor loads.

Inductive and capacitive loads, however, cause the voltage and current waveforms to shift with respect to one another. These types of loads are commonly called power factor loads (i.e., the power factor is less than 1.0).

See INDUCTANCE and CAPACITANCE for more information.

Power factor is frequently multiplied by 100 and expressed as a percentage.
The formula for power factor is:

$$Power\ Factor = \frac{True\ Power\ (KW)}{Apparent\ power\ (KVA)}$$

R -- Symbol used to represent resistance.

Reactive Differential (Cross Current) Compensation -- A circuit arrangement for operating generators in parallel with no generator voltage droop. Reactive Differential Compensation is accomplished by a differential interconnection of the secondaries of the generator current transformers used for Reactive Droop Compensation. This arrangement is not often used and is very difficult to set up when paralleling generators of different capacities.

Reactive Droop Compensation -- A circuit arrangement that creates a droop in generator output voltage that is proportional to the reactive load current. This circuit arrangement makes the paralleled generators share the reactive component of the load current in proportion to the generator ratings. It also can essentially eliminate the reactive component of circulating current which may flow between paralleled generators. The Reactive Droop Compensation arrangement is commonly called the Generator Paralleling Module.

Relay -- An electromechanical device having a magnetic coil which, when energized, opens or closes several sets of contacts.

Resistance -- Opposition to the flow of current.

Resistor (Symbol R) -- A device or component designed to have a definite amount of resistance. Resistors are used in circuits to limit current flow or to provide a voltage drop.

Resistor, Fixed -- A component which is used to control voltage and current by introducing a constant resistance of known value into the circuit.

Resistor, Variable -- Similar to a fixed resistor except the resistance value can be adjusted. The voltage adjust rheostat is a variable resistor.

Rheostat -- A variable resistor.

Series Connection -- An electrical connection in which the input of one element is connected to the output of another element providing only one path for current to flow.



Series Connection

Short Circuit -- An abnormal connection (including an a of relatively low resistance, whether made accidentally, intentionally, between two points of different potential i circuit. Equipment, not protected by fuse or circuit bre ers, may be damaged by a short circuit.

Shunt Trip -- An electromechanical device which, w energized, trips the main line circuit breaker.

Single Pole Switch -- A switch which has only one set of contacts.



Typical Single Pole Switch Shown as a Single Throw Type in the "Off" Position

Single Throw Switch -- A switch which opens a set of contacts in one switch position and closes the contacts in the other position.



Typical Single Throw Switch Shown as a Single Pole Type in the "Off" Position

Speed Droop -- A decrease in steady state speed of an engine due to an increase in applied load. This decrease in speed from the no load speed is expressed as a percentage of full load speed or:

$$\%S_{Droop} = \frac{(S_{NL} - S_{FL}) \times 100}{S_{FL}}$$

Where: $\%S_{Droop}$ = *Percent Speed Droop*
S_{FL} = *Full Load Speed*
S_{NL} = *No Load Speed*

Solenoid -- An electromechanical device which when energized, acts on a movable core or plunger in the center of the energizing coil to perform mechanical work.

Solid-State -- A term which applies to electronic devices which are constructed using semiconductor material. Such devices include transistors, SCR's, and diodes.

Stability -- Freedom from undesired variations or oscillation. In generator set systems, the generator set is stable if it can maintain or quickly re-establish steady state conditions of voltage and frequency after a sudden load change.

Surge Suppressor -- A device capable of conducting current in either direction in the presence of high transient voltages thus protecting devices that could otherwise be damaged.

Synchronism -- The condition where two or more generators are operating at the same frequency and output voltage and are in phase with one another.

Synchronizing -- The procedure of matching the frequency, phase rotation, voltage, and phase relationship of one generator to another for purposes of paralleling the units onto a common bus.

Synchronous -- A generator whose output frequency is directly related (proportional) to the speed of the engine driving the generator.

Tachometer -- An instrument for measuring the rate of rotation expressed in revolutions per minute.

Temperature Drift -- A change in the value of a component caused by changes in operating temperature.

Terminal -- A mechanical device for making electrical connections.

Thyristor (SCR) -- A Silicon-Controlled Rectifier is a structure with an external connection (gate) to one of the inter layer. With no gate current, the SCR characteristic is that of a four-level diode.

Transformer -- Frequently, a device using a laminated iron core with a primary and secondary winding. A transformer changes some level of input (primary) voltage or current to a proportional output (secondary) voltage or current (see Current Transformer and Potential Transformer).

Transient -- A temporary change from the steady state conditions.

V -- Symbol used to represent voltage.

Volt -- The unit of measure of electrical potential (voltage). One volt of electrical potential will force a current of one ampere to flow through a resistance of one ohm.

Voltage -- Electrical potential or pressure which forces current to flow through a circuit.

Voltage Dip -- A temporary reduction in voltage generally resulting from an increase in load.

Voltage Droop -- A decrease in steady state voltage of a generator due to an increase in load applied. This decrease in voltage from the no load voltage is expressed as a percentage of the full load voltage or

$$\%V_{Droop} = \frac{(V_{NL} - V_{FL}) \times 100}{V_{FL}}$$

Where: $\%V_{Droop}$ = *Percent Voltage Droop*
V_{NL} = *No Load Voltage*
V_{FL} = *Full Load Voltage*

Voltage Droop Compensation -- A system which permits paralleled generators to share the currents of a load in proportion to the generator set ratings.

Voltage Regulator -- A device which controls the voltage output of a generator at a preset value regardless of the amount of load applied.

Voltmeter -- An instrument designed to measure electrical potential or voltage.

Katolight Service - Master Repair Manual - Page 3732

Service Literature Ordering Locations

Region	Ordering Location
United States and Canada	Cummins Distributors or Contact 1-800-DIESELS (1-800-343-7357)
U.K., Europe, Mid-East, Africa, and Eastern European Countries	Cummins Engine Co., Ltd. Royal Oak Way South Daventry Northants, NN11 5NU, England
South and Central America (excluding Brazil and Mexico)	Cummins Americas, Inc. 16085 N.W. 52nd. Avenue Hialeah, FL 33104
Brazil and Mexico	Cummins Engine Co., Inc. International Parts Order Dept., MC 40931 Box 3005 Columbus, IN 47201-3005
Far East (excluding Australia and New Zealand)	Cummins Diesel Sales Corp. Literature Center 8 Tanjong Penjuru Jurong Industrial Estate Singapore
Australia and New Zealand	Cummins Engine Company Pty. Ltd. Z Caribbean Drive Scoresby, Victoria 3179 Australia

Obtain current price information from your local Cummins Distributor or (for U.S.A. and Canada) by calling Cummins Toll Free Number 1-800-DIESELS (1-800-343-7357).

Literature Order Form

Use this form for prompt handling of you literature order.

Item	Bulletin Number	Title of Publication	Quantity	U.S. Price Each	Amount
1				$	$
2					
3					
4					
5					
6					
				Order Total	

Contact your Cummins distributor for prices and availability.

For problems with literature orders (for U.S.A. and Canada), contact 1-800-DIESELS (1-800-343-7357). All other locations contact your local Distributor.

Prices subject to change without notice.

Please cut on dotted line

Literature Order Form

Use this form for prompt handling of you literature order.

Item	Bulletin Number	Title of Publication	Quantity	U.S. Price Each	Amount
1				$	$
2					
3					
4					
5					
6					
				Order Total	

Contact your Cummins distributor for prices and availability.

For problems with literature orders (for U.S.A. and Canada), contact 1-800-DIESELS (1-800-343-7357). All other locations contact your local Distributor.

Prices subject to change without notice.
Mail the Literature Order Form along with your ship-to address to your nearest Cummins distributor.

FROM:		
Name:		
Street Address:		
City:	State/Province:	Zip/Postal Code:
Country:		

SHIP TO: (Name and address where literature is to be shipped)		
Name:		
Street Address:		
City:	State/Province:	Zip/Postal Code:
Country:		

Please cut on dotted line

Mail the Literature Order Form along with your ship-to address to your nearest Cummins distributor.

FROM:		
Name:		
Street Address:		
City:	State/Province:	Zip/Postal Code:
Country:		

SHIP TO: (Name and address where literature is to be shipped)		
Name:		
Street Address:		
City:	State/Province:	Zip/Postal Code:
Country:		

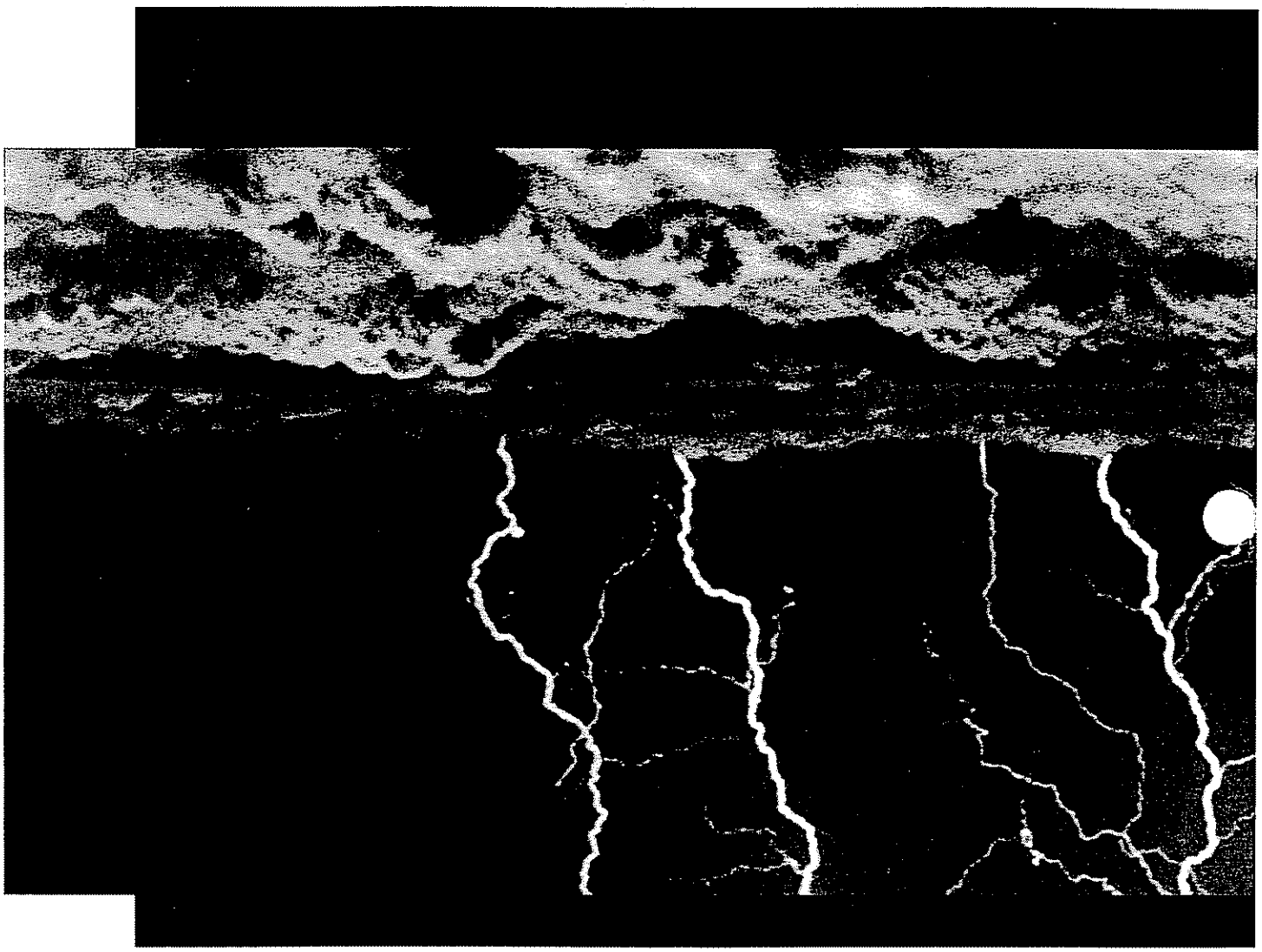

Cummins Inc.
Box 3005
Columbus, IN 47202-3005 U.S.A.

Registered Office
Cummins Engine Company, Ltd.
48-50 Coombe Road
New Malden,
Surrey KT3 4QL,
England
Registration 573951 England

Copyright© 2000
Cummins Engine Company, Inc.

Bulletin 3884960
Printed in U.S.A. 11/00

Katolight Service - Master Repair Manual - Page 3738

Application Information

ASCO® Series 165 Automatic Transfer Switches

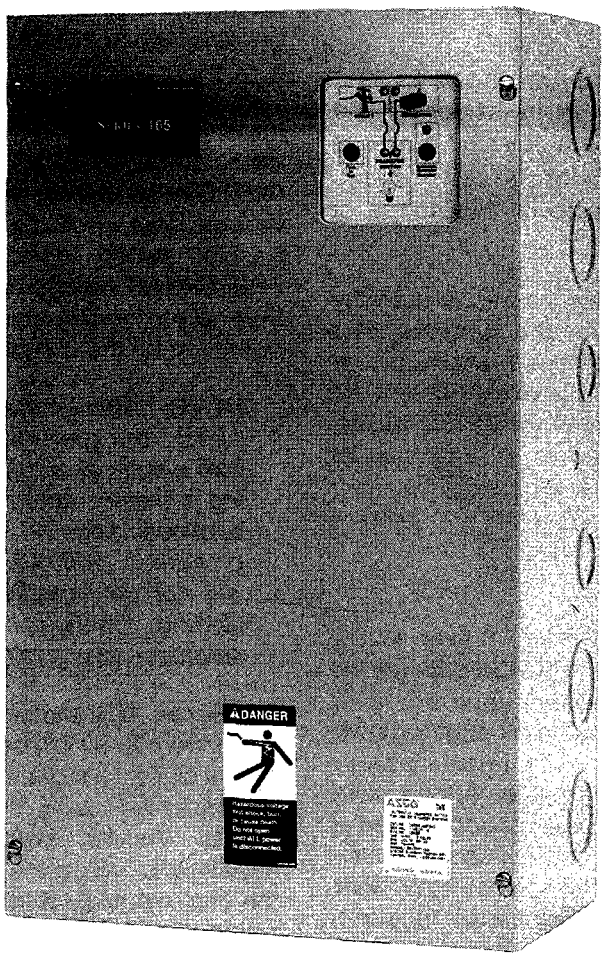

ASCO® Series 165 Automatic Transfer Switch
in Type 1 enclosure.

General Information

Equipment Approvals, Codes, and Safety

ASCO Series 165 transfer switches are Listed under the Underwriters Laboratories, Inc.® (UL®) Standard for Safety for Transfer Switch Equipment, UL 1008.

These transfer switches are intended for use only in Optional Standby Systems in accordance with the National Fire Protection Association, Inc.® (NFPA®) sponsored National Electrical Code®, NEC® / NFPA 70, 1999, Article 702. Optional Standby Systems are intended to protect facilities or property where life safety does not depend on the performance of the system.

ASCO Series 165 transfer switches are listed for and specifically intended for such service in residential and light commercial applications where standby power is needed. **ASCO** also manufactures transfer switch equipment for other applications outside of this scope of service.

The NEC requires that all equipment in optional standby systems be approved for the intended purpose. The Series 165 transfer switches meet these requirements. The transfer switch is designed to positively prevent the inadvertent interconnection of the PREFERRED (utility) and ALTERNATE (generator) sources of supply in its operation.

Transfer Switch Design

The transfer switch provides electrical power to the selected loads from either the PREFERRED (utility) source or the ALTERNATE (generator) source but will never permit the two sources to be connected together because of the mechanical design of the transfer switch. This provides a safe method of transfer during utility power outages by preventing accidental connection of the generator to the utility power lines that could result in injury to utility workers servicing the lines or neighbors. It also protects the generator from possible damage after the utility service is restored and the transfer switch transfers the loads back to the PREFERRED (utility) source.

Automatic or Manual Operation

Series 165 transfer switches are available in either *automatic* or *manually* operated models. Both types serve the electrical loads in the same manner as described in the section titled *Transfer Switch Design*.

The **Series 165 automatic transfer switch** includes a digital controller that continuously monitors the PREFERRED (utility) source. When the PREFERRED (utility) source fails for 3 seconds (refer to the controller specifications in the *Owner's Manual* for voltage settings), the generator engine is signalled to start. When the generator's power output is acceptable (refer to the controller specifications in the *Owner's Manual* for voltage settings) and it has warmed up for 15 seconds, the controller signals the transfer switch to connect the loads to the ALTERNATE (generator) output. After the PREFERRED (utility) source returns to an acceptable voltage level for 5 minutes, the controller signals the transfer switch to connect the loads back to the PREFERRED (utility) source. The generator engine is then signalled to stop after 1 minute of unloaded operation by the controller.

> **NOTE**: *When installing the automatic transfer switch, the generator engine must be provided with electrical automatic starting controls including a battery, automatic choke, engine-cranking termination control, and over-cranking shutdown protection. Without these controls the generator will not be capable of providing the automatic starting functions required for an automatic standby power system.*

The **Series 165 *manual* transfer switch** uses the same power transfer switch as the *automatic* model. It does not have a digital controller because the switching operation is accomplished using the external operating handle. A *manual* transfer switch is used in *non-automatic* applications. When the PREFERRED (utility) source fails the user manually starts the generator engine. After it is running the user manually transfers the transfer switch to the ALTERNATE (generator) source using the operating handle on the outside of the switch enclosure. After the PREFERRED (utility) source is restored (which must be determined by the user's observations of loads only connected to the utility source) the user transfers the transfer switch to the PREFERRED (utility) source using the same operating handle. The user can then shut off the generator engine.

Katolight Service - Master Repair Manual - Page 3740

The decision in selecting an *automatic* or *manually* operated transfer switch, and thus an automatic or manual standby power system, is typically based on the level of importance that the user and possible occupants will place on continuity of electrical service to the selected loads. In general –

An *automatic* transfer switch should be used if –

- The user requires that the selected loads be provided standby power in the minimum period of time during a utility power outage.
- The user or any persons present during a utility power outage may not be knowledgeable or capable of the actions that must be taken to start the generator and manually operate the transfer switch.
- The selected loads must be provided electrical power even when the premises are unoccupied.

A *manual* transfer switch can be used if –

- There is no requirement to provide power to the selected loads immediately during a utility power outage.
- The user or any persons present during a utility power outage will be knowledgeable and capable of the actions that must be taken to start the generator and manually operate the transfer switch. This may have to be done during conditions of reduced lighting, total darkness, or other unfavorable conditions.
- There is no requirement to provide continuous power to the selected loads when premises are unoccupied.

Installation Requirements

Safe installation requires that a qualified electrical equipment installer install the necessary wiring and equipment. The transfer switch and associated equipment must be installed in accordance with the National Electrical Code and all applicable local codes. In addition, the equipment must be installed under any required building permits and be inspected prior to operation.

⚠ WARNING

Read and understand all instructions before installing, operating, or servicing. Failure to do so could result in serious personal injuries or property damage.

Equipment Ratings

Series 165 transfer switches are designed for 120/240 volts ac, 60 Hertz, single phase, 3 wire loads. They are provided in the following ampere ratings that are suitable for use with a standby generator up to the indicated maximum rating.

Ampere Rating (per phase)	**Maximum Generator Rating** Kilowatts (KW) at 240 volts
100 amps	24 KW
200 amps	48 KW

To determine the ampere rating of the transfer switch being installed, refer to the nameplate on the front of the unit using the explanation of nameplate data provided on the cover of the *Owner's Manual*. Refer to the generator manufacturer's nameplate data and generator manual to determine the generator voltage, ampere, and KW ratings. The voltage rating of the generator and the utility service must be the same as the transfer switch. The ampere ratings of the utility and generator feeders and circuit breakers must be equal to or less than the transfer switch rating. The transfer switch cannot be installed where it may be operated above its nameplate ampere rating.

To determine what type of transfer switch is being installed, *automatic* or *manual* (non–automatic), check the first line of the nameplate on the front of the product. **If installing an "automatic transfer switch" the generator must be capable of automatic starting**; refer to the note in the section titled *Automatic* or *Manual Operation* on page 2.

Installation Considerations

There are two basic methods that may be used to install a complete optional standby power system. In general, the selected generator's ampere rating as compared to the incoming utility service's ampere rating will determine which installation method should be used.

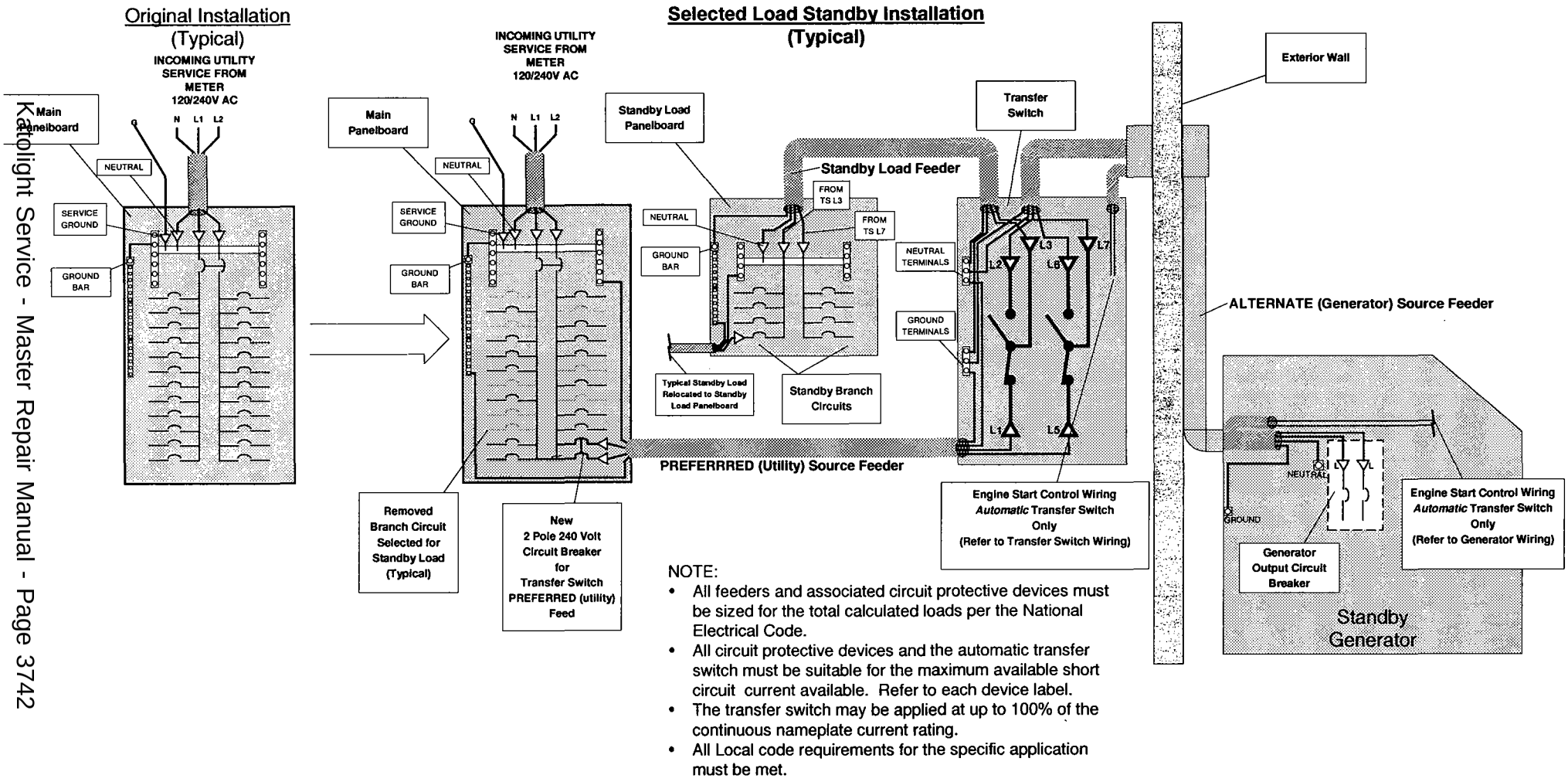

NOTE:

- All feeders and associated circuit protective devices must be sized for the total calculated loads per the National Electrical Code.
- All circuit protective devices and the automatic transfer switch must be suitable for the maximum available short circuit current available. Refer to each device label.
- The transfer switch may be applied at up to 100% of the continuous nameplate current rating.
- All Local code requirements for the specific application must be met.

Figure 1. Selected Load Standby Installation.

Selected Load Standby Installation

Selected Load Standby installations are the most common type. This type of installation is based on the pre-selection of the loads that will require standby power. The generator and transfer switch are sized by their ampere ratings based on the total computed load of the pre-selected standby branch circuits as defined in the National Electrical Code, NEC/NFPA 70, 1999, Article 220. The transfer switch may be either an *automatic* or *manual* model.

The advantage of this type of installation is that a generator that has an ampere rating less than the utility feeder can feed selected loads during a utility outage. In existing premises, the *main panelboard* remains connected to the incoming utility service. A second circuit breaker panelboard is installed to feed the selected loads that will be provided with standby power. This becomes the *standby load panelboard*. The transfer switch position determines which source; PREFERRED (utility) or ALTERNATE (generator) provides power to the loads connected to the standby load panelboard. Figure 1 on page 4 shows a typical Selected Load Standby Installation diagram.

In the example of the Selected Load Standby Installation (Figure 1), the branch circuit from the *main panelboard* provides the PREFERRED (utility) feed to the transfer switch. Typically, the PREFERRED (utility) and ALTERNATE (generator) circuit breaker ratings would be equal to the output of the generator with appropriately sized feeders to the transfer switch. The rating of the *standby load panelboard* would have the same rating as the generator. The maximum load that can be connected to the *standby load panelboard* is then based on this rating as defined in the National Electrical Code.

The Selected Load Standby Installation is also well suited for use with portable generators and a manual transfer switch since the *standby load panelboard* is selected based on the output of the generator. The primary difference is in the method used to connect the exterior wiring for the ALTERNATE (generator) feeder to the transfer switch into the permanent wiring system of the premises. The following diagram (Figure 2) shows a typical connection method for the portable generator.

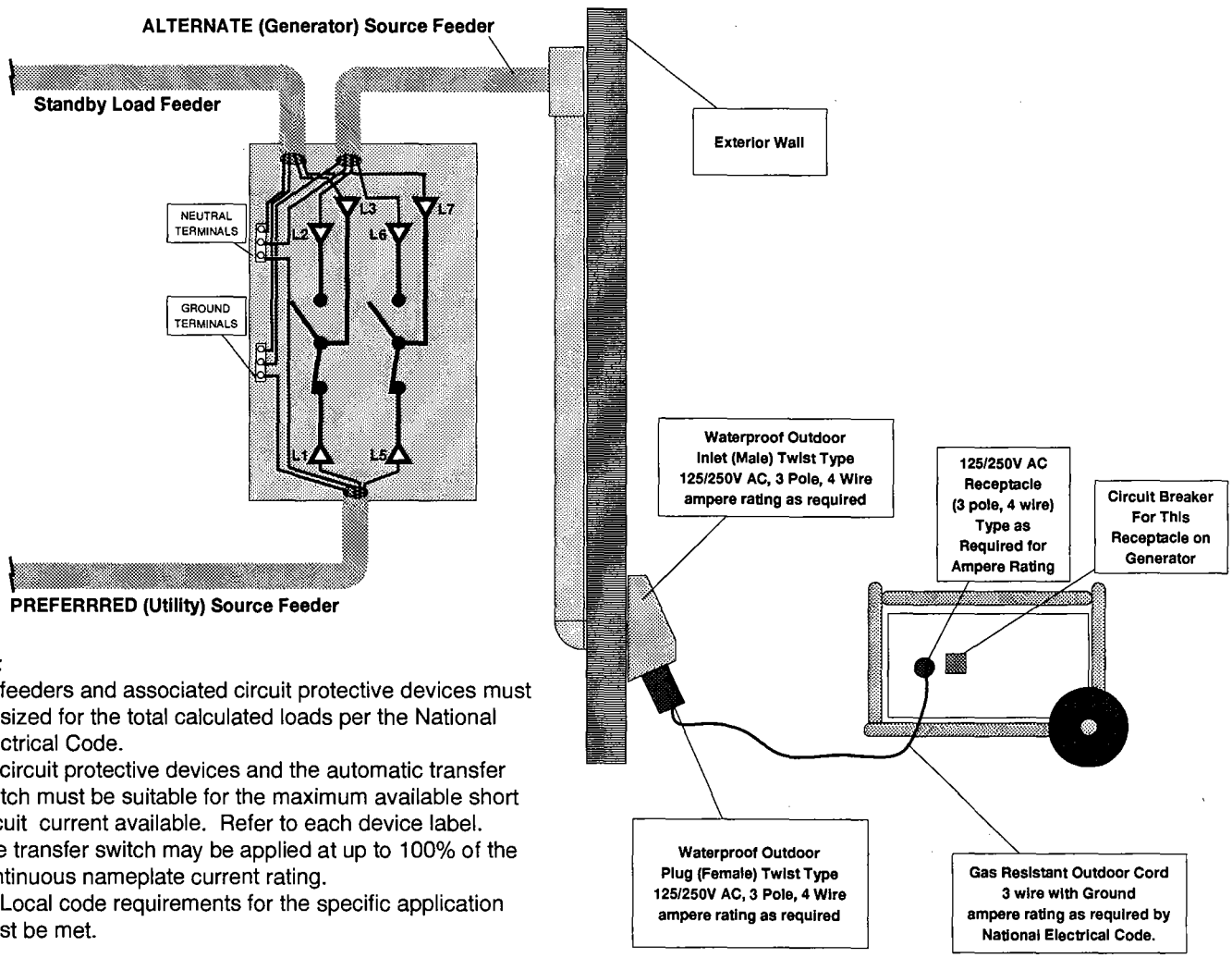

NOTE:

- All feeders and associated circuit protective devices must be sized for the total calculated loads per the National Electrical Code.
- All circuit protective devices and the automatic transfer switch must be suitable for the maximum available short circuit current available. Refer to each device label.
- The transfer switch may be applied at up to 100% of the continuous nameplate current rating.
- All Local code requirements for the specific application must be met.

Male inlets and female plugs are available in various ampere sizes. Note that when using portable generators, Article 702 of the National Electrical Code (Optional Standby Systems) does not apply.

Figure 2. Connection method for the portable generator.

Katolight Service - Master Repair Manual - Page 3743

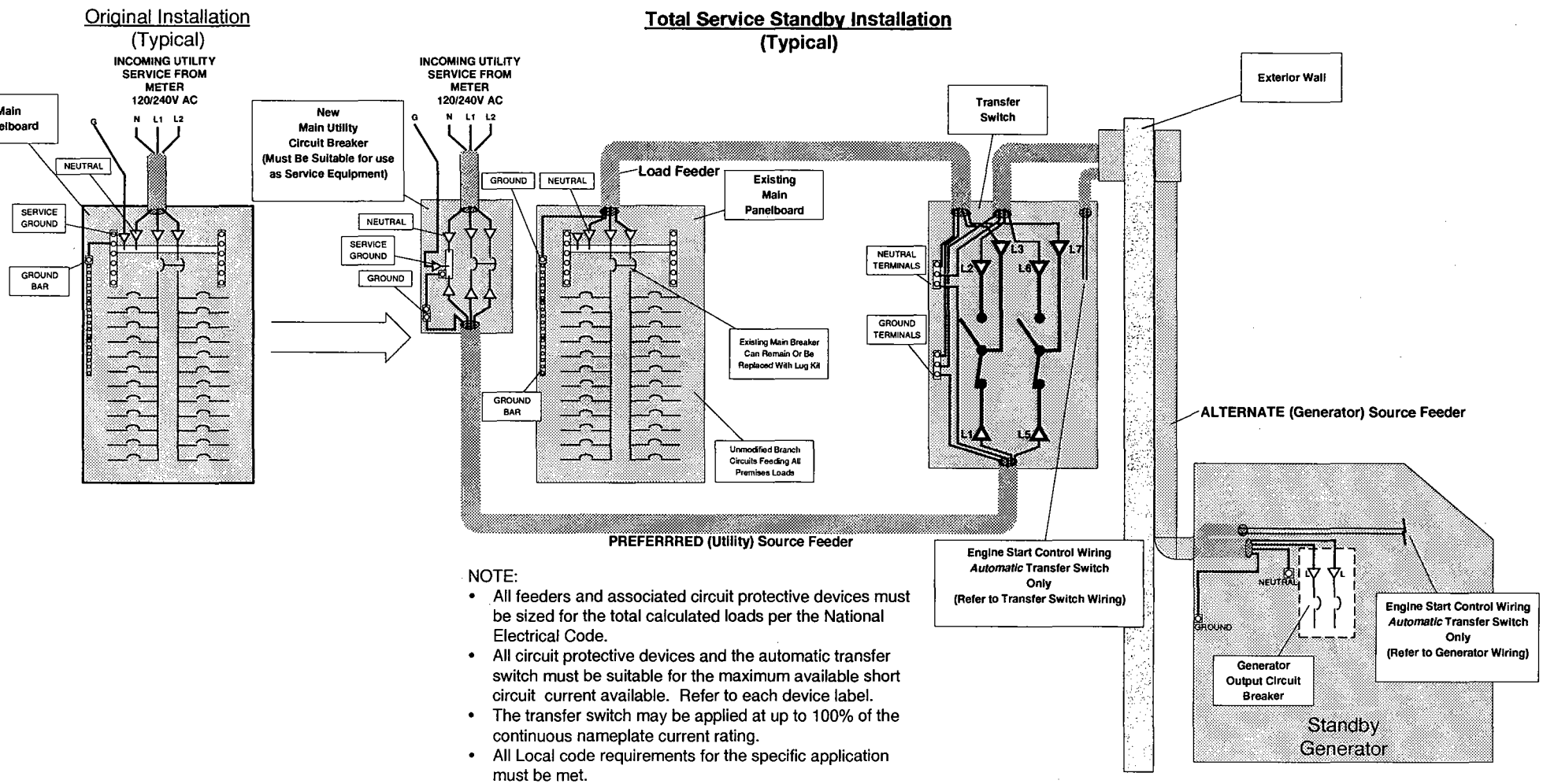

NOTE:

- All feeders and associated circuit protective devices must be sized for the total calculated loads per the National Electrical Code.
- All circuit protective devices and the automatic transfer switch must be suitable for the maximum available short circuit current available. Refer to each device label.
- The transfer switch may be applied at up to 100% of the continuous nameplate current rating.
- All Local code requirements for the specific application must be met.

Figure 3. Total Service Standby Installation.

Total Service Standby Installation

When the generator ampere rating is, at least, equal to the total computed load of the *main panelboard* as defined in the National Electrical Code, NEC/NFPA 70, 1999, Article 220, a Total Service Standby installation can be implemented. The transfer switch may be either an *automatic* or *manual* model.

Total Service Standby power system installations utilize a single circuit breaker panelboard to distribute power to all premise loads. This is the *main panelboard*. The "main" terminals of the *main panelboard* are connected to the LOAD terminals of the transfer switch. The transfer switch position determines which source; PREFERRED (utility) or ALTERNATE (generator) provides power to the loads connected to the branch circuits of the *main panelboard*.

The advantage of this installation is that only a single circuit breaker panelboard is required. In existing premises, the original main panelboard can be utilized without rewiring of the branch circuits. The following diagram in Figure 3 shows a typical Total Service Standby Installation.

In the example of the Total Service Standby Installation above, a separate *main utility circuit breaker* is added for the incoming utility service for the transfer switch PREFERRED (utility) source feeder. Typically, this would be the same size as the main circuit breaker in the existing *main panelboard*. The main circuit breaker in the *main panelboard* may remain or it can be removed and replaced with main terminal lugs if a kit is available from the panelboard manufacturer. The generator output must be at least equal in size to the incoming utility feeder and *main panelboard* rating so that it has sufficient capacity to supply the loads and any other loads which may be added to the *main panelboard*, based on its rating, in the future. The output breaker of the generator and the feeder from it would be equal to those of the *main utility circuit breaker.*

Katolight Service - Master Repair Manual - Page 3745

© Automatic Switch Co. 1999

Lighthouse Control Panel Differences:

Lighthouse - 20kW or larger Units:
ASCO 165 ATS w/o start/stop control

- Part number on control board
  (lower left corner of front) 629100
- Part number on IC chip (upper left on back)
  629103-004 (004 is rev. #)

Lighthouse - Coleman 9kW or 15kW Units:
ASCO 165 ATS w/ start/stop control

- Part number on board 629068
- Part number on IC chip 629100-001

ASCO 165 ATS Voltage Check

Lighthouse - Coleman 9kW and 15kW Units

All voltages are DC and measured on a 9 pin connector ATS board.

Pin to Pin	Reading:	
3 to 2	_____	Should be 12Vdc any time battery is connected.
7 to 2	_____	Should be 12Vdc any time mode switch is in auto.
5 to 2	_____	Should be 12Vdc any time mode switch is in auto and diode is good.
8 to 2	_____	Should be 12Vdc when test switch is pressed or utility fails. (Crank solenoid.)
4 to 2	_____	Should be 12Vdc when test switch is pressed or utility fails. (Gas valve.)

***If these voltages are present at the proper times there is nothing wrong with the DC engine control circuitry.
***Voltages for pin 3 and 7 come from the generator. If not present problem is not in the ATS.
***Pin 2 must be connected to generator ground.

Addendum for 1000 & 1200 amp Series A300 Automatic Transfer Switches

Engine Starting Contacts

The engine control contact connections are located on the transfer switch. Connect signal wires to appropriate terminals as specified in Table 1 and shown in Figure 1 below.

Table 1. Engine start connections.

When normal source fails	Terminals on transfer switch
contact closes	TB14 and TB15
contact opens	TB14 and TB16

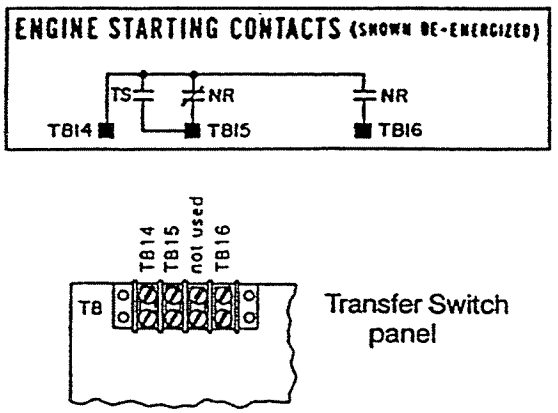

Figure 1. Engine starting contact label and location for 1000 and 1200 amp transfer switches.

Manual Operation

A detachable manual operator handle is provided on the Transfer Switch for maintenance purposes only. Manual operation of the switch must be checked before it is energized (operated electrically).

⚠ DANGER: To prevent the possibility of fatal electrical shocks and burns, do not manually operate the switch until all power and control circuits are disconnected. Open Normal and Emergency circuit breakers.

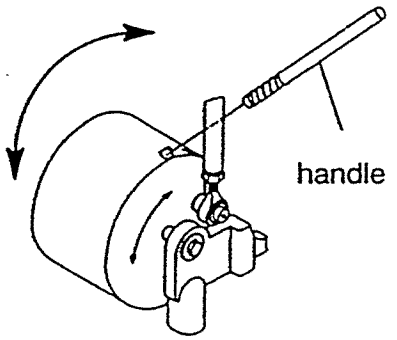

Figure 2. Maintenance handle for 1000 and 1200 amp transfer switches.

1. Insert the manual handle into the hole in the weight as shown in Figure 2 above.
2. Move the handle as shown to manually operate the Transfer Switch. The switch should operate smoothly without binding. If it does not, check for shipping damage or construction debris.
3. Return the Transfer Switch to the *N* (normal) position. Remove manual operator handle and store it on the Transfer Switch in the place provided.

⚠ WARNING: To prevent the possibility of personal injury or property damage, be sure to remove the manual handle after manually operating the transfer switch.

ASCO Controls are designed and manufactured by Automatic Switch Co., 50-60 Hanover Road, Florham Park, New Jersey 07932 (201) 966-2000

381339-193

ASCO A300 DIP SWITCH SETTINGS

SWITCH 1		DESCRIPTION	FACTORY SETTINGS
Act. 1	ON	NSV Dropout	
Act. 1	OFF	NSV Dropout	Left is on
Act. 2	ON	NSV Dropout	
Act. 2	OFF	NSV Dropout	Right is off
Act. 3	ON	NSV Dropout 90%	
Act. 3	OFF	NSV Dropout 95%	ON
Act. 4	ON	ES Freq. 50Hz	
Act. 4	OFF	ES Freq. 60Hz	OFF
Act. 5	ON	Motor Load Transfer ON	
Act.5	OFF	Motor Load Transfer OFF	OFF
Act. 6	ON	Single Phase	
Act. 6	OFF	Three Phase	OFF
Act. 7	ON	Opt. Timer Disabled/STD Timer Enabled*	
Act. 7	OFF	Opt. Timer Enabled/STD Timer Disabled*	OFF
Act. 8	ON	Exercise with Load	
Act. 8	OFF	Exercise without Load	OFF

SWITCH 2		DESCRIPTION	FACTORY SETTINGS
Act. 1	ON	Bypass Transfer Time Delay Disable	
Act. 1	OFF	Bypass Transfer Time Delay Enable	ON
Act. 2	ON	Remote Transfer to E (Peak Shave) Disable	
Act. 2	OFF	Remote Transfer to E (Peak Shave) Enable	ON
Act. 3	ON	Remote Test Disable	
Act. 3	OFF	Remote Test Enable	ON
Act. 4	ON	Inhibit Transfer to Emergency Disable	
Act. 4	OFF	Inhibit Transfer to Emergency Enable	ON
Act. 5	ON	Opt Timer Disabled/STD Timer Enabled*	
Act. 5	OFF	Opt Timer Enabled/STD Timer Disabled*	ON
Act. 6	ON	Delay After Transfer Enable	
Act. 6	OFF	Delay After Transfer Disable	OFF
Act. 7	ON	Delay Before Transfer	
Act. 7	OFF	Delay Before Transfer	ON
Act. 8	ON	Delay Before Transfer	
Act. 8	OFF	Delay Before Transfer	ON

SWITCH 3		DESCRIPTION	FACTORY SETTINGS
Act. 1	ON	Time Delay to Engine Start 1 second	
Act. 1	OFF	Time Delay to Engine Start 3 seconds	OFF
Act. 2	ON	Transformer Voltage Adj. HI	
Act. 2	OFF	Transformer Voltage Adj. LOW	ON
Act. 3		NOT USED	
Act. 4		Used with Acc. 72A Communication Module Only	
Act. 5		Used with Acc. 72A Communication Module Only	
Act. 6		Used with Acc. 72A Communication Module Only	
Act. 7		Used with Acc. 72A Communication Module Only	
Act. 8		Used with Acc. 72A Communication Module Only	

***Both Actuators Must Be Set For Correct Operation**

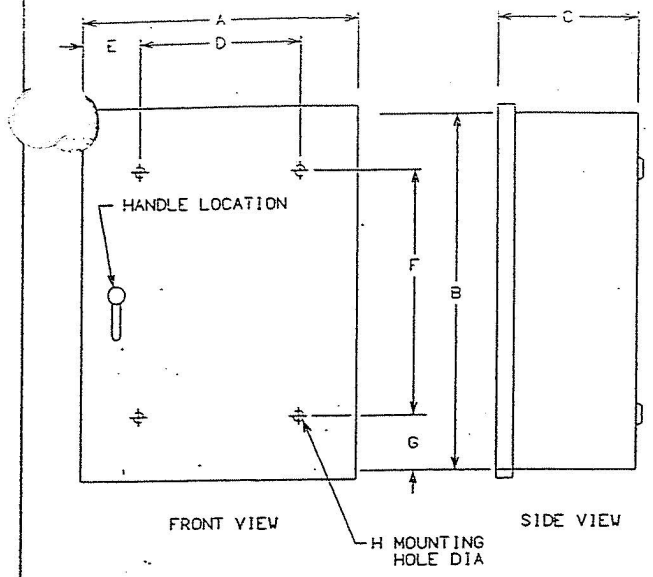

FIGURE 1

TYPE 1 ENCLOSURE FOR AUTOMATIC TRANSFER SWITCHES 30 - 800 AMP

AMP SIZE	FIG NO	DIMENSIONS A	B	C	D	E	F
30,70,104, 150,200	1	17.50 444.5	31.00 787.4	11.62 295.1	14.50 368.3	1.50 38.1	28.00 711.2
225,250, 400	1	18.00 457.2	48.00 1219.2	13.00 330.2	15.00 381.0	1.50 38.1	45.00 1143.0
600,800	1	24.00 609.6	63.00 1600.2	17.50 444.5	21.00 533.4	1.50 38.1	60.00 1524.0

	FIG NO	G	H
30,70,104, 150,200	1	1.50 38.1	0.37 Ø9.4
225,260, 400	1	1.50 38.1	0.37 Ø9.4
600,800	1	1.50 38.1	0.37 Ø9.4

TYPE 1 ENCLOSURES FOR AUTOMATIC TRANSFER SWITCHES WITH OPTIONAL SWITCHING NEUTRAL POLE OR OVERLAPPING NEUTRAL

AMP SIZE	FIG NO	DIMENSIONS A	B	C	D	E	F
30,70, 104,150	1	17.50 444.5	31.00 787.4	11.62 295.1	14.50 368.3	1.50 38.1	28.00 711.2
225,260 &400	1	18.00 457.2	48.00 1219.2	13.00 330.2	15.00 381.0	1.50 38.1	45.00 1143.0
600 & 800	1	30.00 762.0	63.00 1600.2	17.50 444.5	27.00 685.8	1.50 38.1	60.00 1524.0

	FIG NO	G	H
30,70, 104,150	1	1.50 38.1	0.37 Ø9.4
225,260 &400	1	1.50 38.1	0.37 Ø9.4
600 & 800	1	1.50 38.1	0.37 Ø9.4

NOTES

1. REMOVABLE DOOR, KEY LOCKING HANDLE. SINGLE DOOR HINGED ON RIGHT SIDE WITH SINGLE CENTER LATCH AND CAPTIVE SCREWS ON TOP AND BOTTOM.
2. FULL WIRING GUTTERS AND 0.75-0.50 DIA, Ø19.1-Ø12.7 MM, COMBINATION PILOT KNOCKOUTS PROVIDED TOP AND BOTTOM ONLY.

GENERAL NOTES
(FIGURES 1 & 2)

1. ENCLOSURES CONSTRUCTED IN ACCORDANCE WITH UL STANDARD 508.
2. STANDARD FINISH-LIGHT GREY ANSI #61.
3. WIDTH, HEIGHT, AND DEPTH DIMENSIONS ON FIGS. 1 & 2 ARE INSIDE DIMENSIONS. WIDTH, HEIGHT, AND DEPTH DIMENSIONS ON FIG 3 ARE OUTSIDE DIMENSIONS.
4. THE TRANSFER SWITCH UNIT IS MOUNTED ON THE INSIDE BACK SURFACE AND THE CONTROL PANEL AND ADD-ON PANEL SUB-ASSEMBLY MOUNTED ON THE INSIDE DOOR SURFACE. THE CONTROL PANEL IS CONNECTED TO THE TRANSFER SWITCH PANEL BY A WIRE HARNESS WITH A QUICK DISCONNECT PLUG.
5. AN OPERATOR'S MANUAL IS FURNISHED WITH EACH AUTOMATIC TRANSFER SWITCH. REFER TO THIS PUBLICATION PRIOR TO INSTALLATION AND OPERATION OF THE SWITCH.

APPROXIMATE SHIPPING WEIGHT, LBS (KG)
(WEIGHT INCLUDES TRANSFER SWITCH & CONTROLS)

AMP SIZE	POLES	WEIGHT TYPE 1	TYPES 3R,4 & 12
30, 70 & 104	2	67 (31)	82 (37)
	3	70 (32)	85 (38)
150 200	2	69 (32)	84 (38)
	3	72 (33)	87 (39)
225,260, 400	2	117 (53)	132 (60)
	3	125 (57)	140 (63)
600 & 800	2	250 (114)	250 (114)
	3	260 (118)	260 (118)

SIZES OF UL LISTED SOLDERLESS SCREW TYPE TERMINALS FOR EXTERNAL POWER CONNECTIONS

SWITCH RATING (AMPS)	RANGE OF AL-CU WIRE SIZES
30-104	ONE #14 TO 2/0 AWG
150	ONE #8 TO 3/0 AWG
200	ONE #8 TO 3/0 AWG COPPER ONLY
225,260,400	TWO #1/0 AWG TO 250 MCM OR ONE #4 AWG TO 600 MCM
600,800	THREE #2 AWG TO 600 MCM

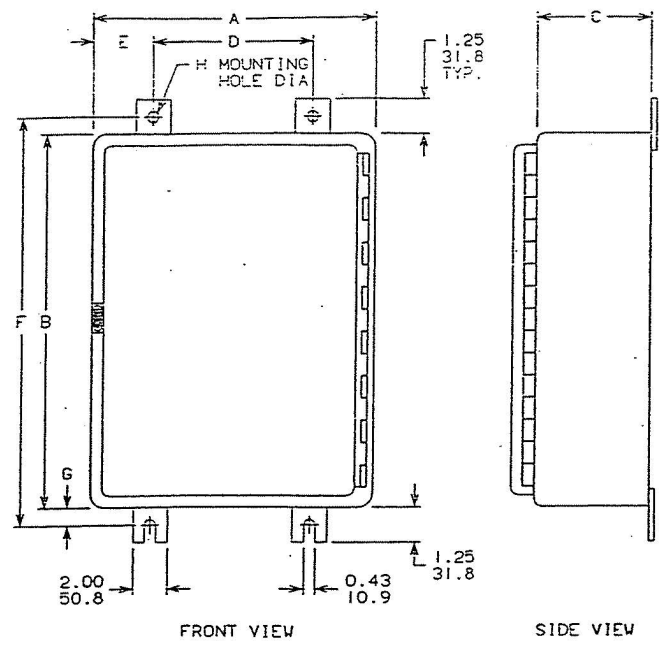

FIGURE 3

TYPE 3R,4, AND 12 ENCLOSURES FOR AUTOMATIC TRANSFER SWITCHES 30 - 800 AMP

AMP SIZE	FIG NO	DIMENSIONS A	B	C	D	E	F
30,70,104, 150,200	3	17.50 444.5	32.50 825.5	11.62 295.1	11.50 292.1	3.00 76.2	33.75 857.3
225,260 400	3	18.00 457.2	48.00 1219.2	13.00 330.2	12.00 304.8	3.00 76.2	49.25 1251.0
600,800	3	24.00 609.6	63.00 1600.2	17.50 444.5	18.00 457.2	3.00 76.2	64.25 1632.0

	FIG NO	G	H
30,70,104, 150,200	3	0.62 15.7	0.43 Ø10.9
225,260 400	3	0.62 15.7	0.43 Ø10.9
600,800	3	0.62 15.7	0.43 Ø10.9

TYPE 3R,4, AND 12 ENCLOSURES FOR AUTOMATIC TRANSFER SWITCHES WITH OPTIONAL SWITCHING NEUTRAL POLE OR OVERLAPPING NEUTRAL

AMP SIZE	FIG NO	DIMENSIONS A	B	C	D	E	F
30,70, 104,150	3	17.50 444.5	32.50 825.5	11.62 295.1	11.50 292.1	3.00 76.2	33.75 857.3
225,260 &400	3	18.00 457.2	48.00 1219.2	13.00 330.2	12.00 304.8	3.00 76.2	49.25 1251.0
600 & 800	3	30.00 762.0	63.00 1600.2	17.50 444.5	24.00 609.6	3.00 76.2	64.25 1632.0

	FIG NO	G	H
30,70, 104,150	3	0.62 15.7	0.43 Ø10.9
225,260 &400	3	0.62 15.7	0.43 Ø10.9
600 & 800	3	0.62 15.7	0.43 Ø10.9

NOTES

TYPE 3R TYPE 4 TYPE 12

1. SINGLE DOOR HINGED ON RIGHT SIDE WITH PADLOCK HASP. PLATED DOOR CLAMPS ON THREE (3) SIDES FOR TYPE 4, AND ONE (1) SIDE FOR TYPE 3R & 12.
2. FULL WIRING GUTTERS PROVIDED TOP AND BOTTOM.
3. NO KNOCKOUTS PROVIDED

ASCO SERIES 300
ENCLOSURE DRAWING

CATALOG NO. _____ CERTIFIED
TO ASCO ® S. O. _____
DATE _____ BY _____

INCHES MM | THIRD ANGLE PROJECTION

COMPUTER GENERATED DRAWING

Automatic Switch Co.®
FLORHAM PARK, NEW JERSEY, 07932
PRINTED IN U.S.A.

	BY	DATE
DRAWN	CC	4/95
CHECKED		
DFTG APVL		
ENGR APVL	SDH	4/95

PROPERTY OF AUTOMATIC SWITCH CO. USE PERMITTED FOR OUR WORK ONLY. ALL RIGHTS OF DESIGN OR INVENTION ARE RESERVED.

☐ AL ☐ AP ☒ CE ☐ AS ☐ AN
☐ AD ☐ AA ☐ ☐ ☐

COMPOSITE ENCLOSURE OUTLINE AND MOUNTING DIAGRAM FOR 2 & 3 POLE W/WO NEUTRAL 30 THROUGH 800 AMPS ASCO® SERIES 300 AUTOMATIC TRANSFER SWITCHES

ER NO	ITEM CHGD	CHG	DATE	APVL
145463	SEE ECN	B	8/97	YZ
144041	SEE ECN	A	4/97	YZ
134244	ISSUED	-	3/95	SDH

DS 497148

CHG LTR: B

Katolight Service - Master Repair Manual - Page 3755

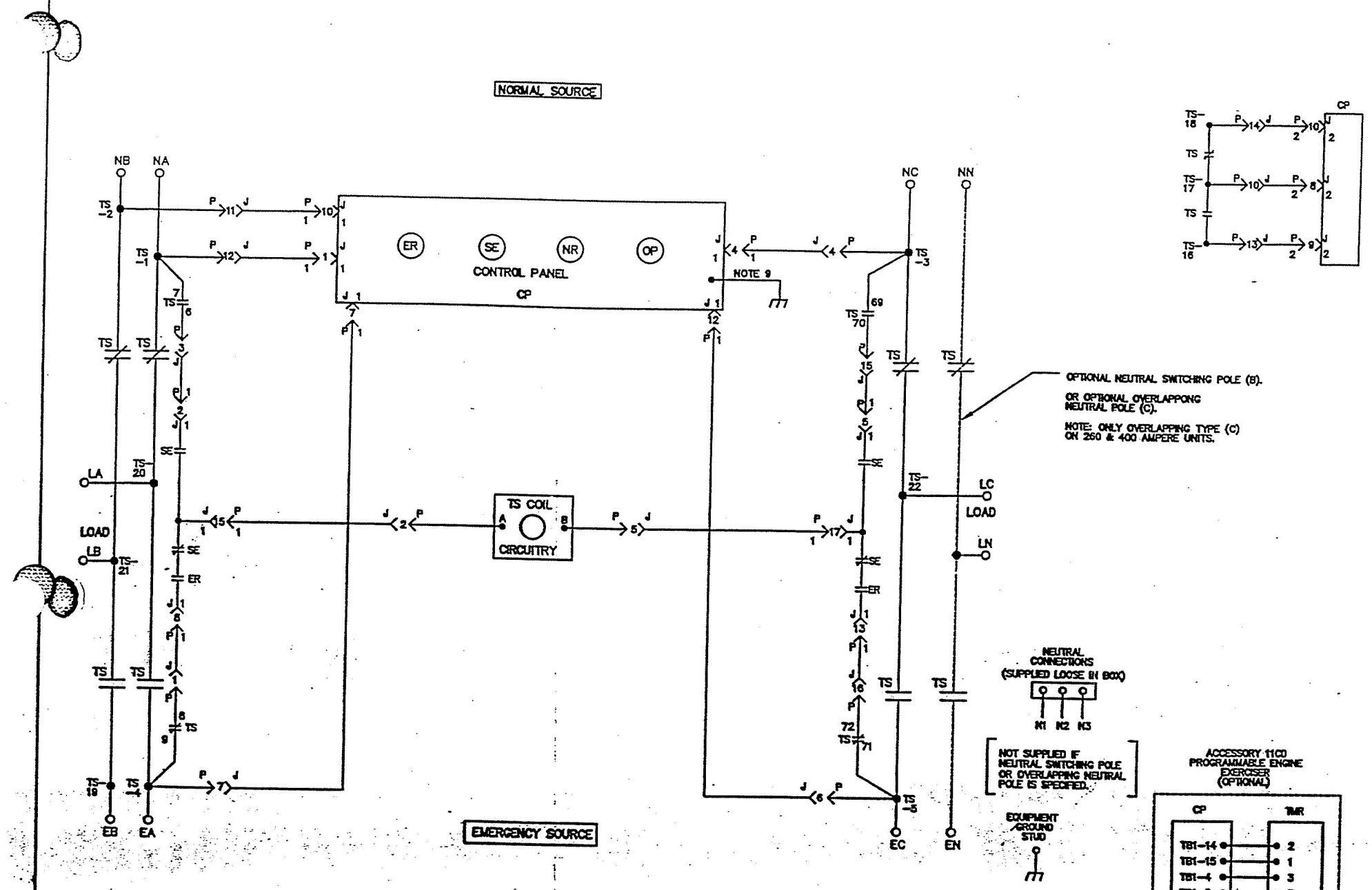

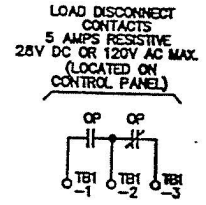

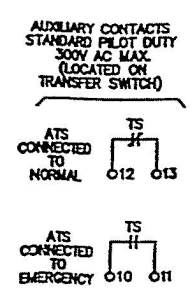

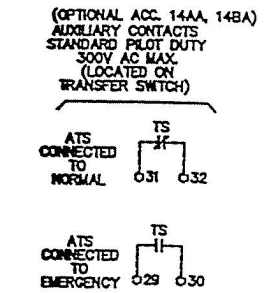

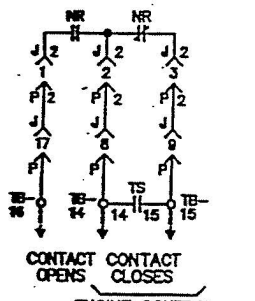

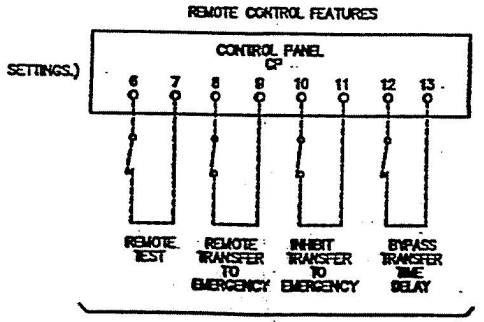

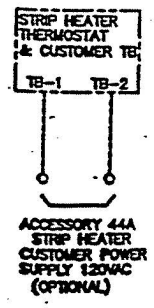

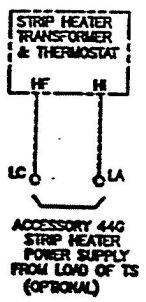

ASCO SERIES 300
WIRING DIAGRAM

POWER CONNECTIONS

SIZES OF UL LISTED SOLDERLESS SCREW TYPE TERMINALS FOR EXTERNAL POWER CONNECTIONS

SWITCH RATING (AMPS)	RANGE OF AL-CU WIRE SIZES (UNLESS SPECIFIED COPPER ONLY)
30–104	ONE #14 TO 2/0 AWG
150	ONE #6 TO 3/0 AWG
200	ONE #6 TO 3/0 AWG COPPER (CU) ONLY
225, 260, 400	TWO #1/0 AWG TO 250 MCM OR ONE #4 AWG TO 600 MCM
600,800	THREE #2 AWG TO 600 MCM
2500–4000A	SUITABLE FOR BUS BAR

GENERAL NOTES

1. SWITCH SHOWN DE-ENERGIZED CONNECTED TO NORMAL SOURCE.
2. DEVICE SYMBOLS AND DESIGNATIONS ARE IN ACCORDANCE WITH NEMA PUB. ICS PART 1–101A. 1–1983,
3. TS WIRES: #20 AWG ON 30–200 AMPS AND #16 AWG ON 225–800 AMPS, CONTROL WIRING IS #16 AWG. ALL WIRES ARE STRANDED COPPER. PANEL
4. CINDICATES CUSTOMER CONNECTION POINTS.
5. ◉INDICATES FACTORY CONNECTION POINTS.
6. CONNECTION POINTS THAT HAVE BOTH CUSTOMER CONNECTIONS AND FACTORY CON ARE SHOWN OPEN AS CUSTOMER CONNECTION POINTS. NECTIONS
7. THE TRANSFER UNIT IS MOUNTED ON THE BACK INSIDE SURFACE OF THE ENCLOS THE CONTROL PANEL AND ANY OPTIONAL ACCESSORIES ARE MOUNTED ON THE INSIDE SURFACE OF THE DOOR. URE.
8. AN OPERATOR'S MANUAL IS FURNISHED WITH EACH AUTOMATIC TRANSFER SWITCH. REFER TO THIS PUBLICATION PRIOR TO INSTALLATION AND OPERATION OF THE SWITCH.
9. SWITCH AND ALL CONTROL FEATURES ARE LISTED UNDER UL–1008.
10. GROUND STRAP ON CONTROL PANEL IS AFFIXED TO CHASSIS (ENCLOSURE) AT LOWER LEFT CONTROL PANEL MOUNTING STUD.
11. USE X SUFFIX WHEN SPECIFYING ENCLOSURES OTHER THAN TYPE 1 OR ACCESSORIES.

COMPUTER GENERATED DRAWING

BASIC CATALOG NUMBERS ASCO	POLES	AMPS	SUFFIXES VOLT CODE	CONTROL CODE	OPTIONAL ACCESSORY	ENCLOSURE CODE
300	B C	3	200	4 6	1 ALL UNITS	X SEE NOTE 10	C
			30 70 104 150 225 260 400 600 800 2500 3000 4000	4 6 8 C X		

SUFFIX CODE DESCRIPTIONS

VOLTAGE CODES (3 PHASE, 3 OR 4 WIRE, 50–60HZ)		CONTROL CODES ALL UNITS	POLE CODES		ENCLOSURE CODES	
4	199–208V	1 STANDARD	B	SWITCHED NEUTRAL	C	TYPE 1
6	220–240V				X C	TYPE 3R
8	460–480V		C	OVERLAPPING NEUTRAL		TYPE 4
C	575–600V					TYPE 12
X	399–415V					SEE NOTE 10
X	364–380V					
X	440V					

COMPOSITE 3 PHASE WIRING FOR ASCO® SERIES 300 AUTOMATIC TRANSFER SWITCHES RATED UP TO 600V AC MAX. WITH MICROPROCESSOR CONTROLS

CATALOG NUMBER _____ CERTIFIED TO ASEA ® S.O. _____

DATE _____ BY _____

DRAWN	DATE	CHECKED	DATE	APPLICATION	DATE	APPROVED	DATE
CC	2/95				2/95		

Automatic Switch Co.® FLORHAM PARK, N.J. U.S.A.

DS 493577

SHEET 1OF2

Katolight Service - Master Repair Manual - Page 3756

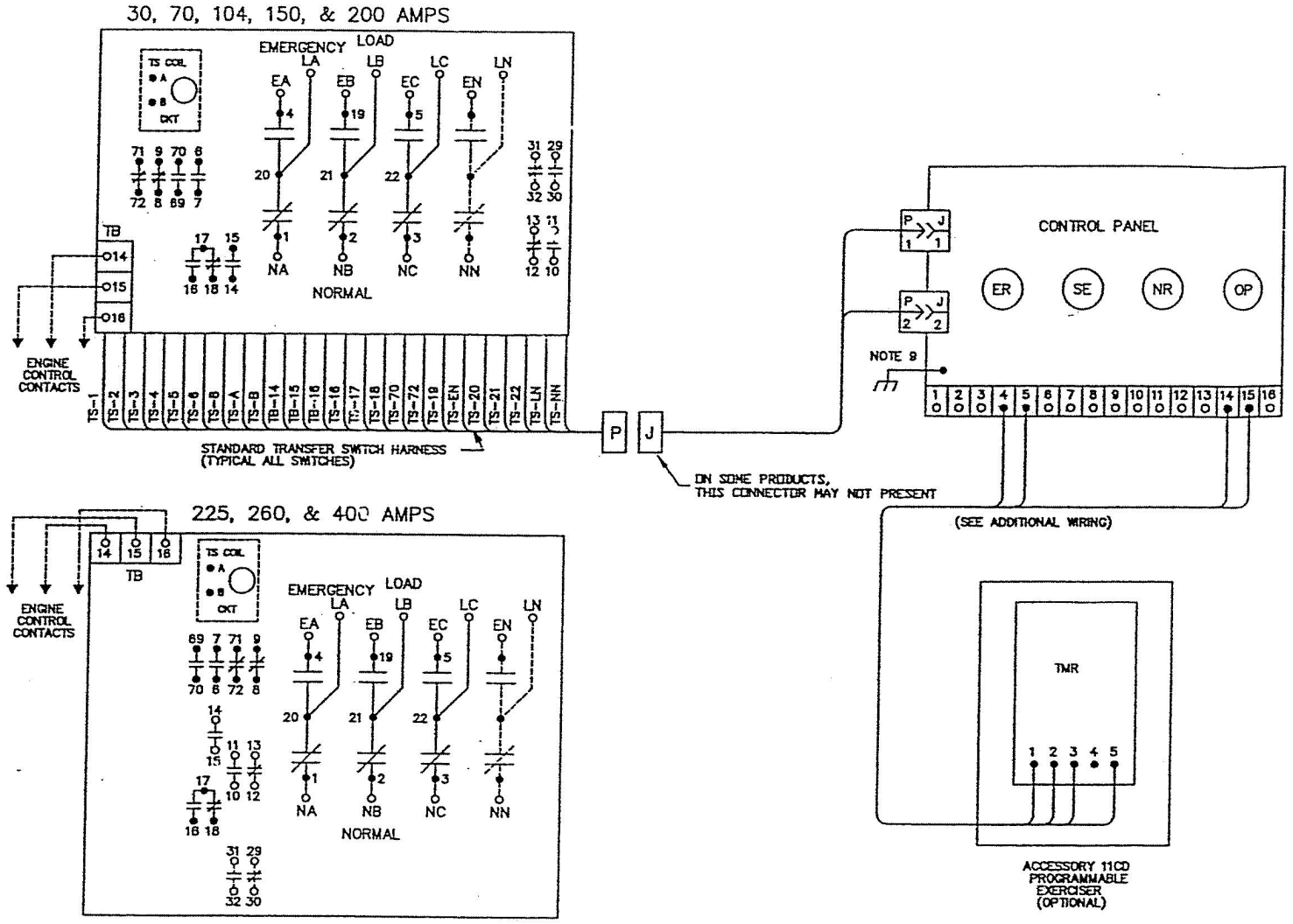

(ACCESSORY 11CD ONLY)

WIRE NO	ADDITIONAL WIRING WIRES TO BE ADDED	AWG / CLR
1	CP-TB1-4, TMR-3	16
2	CP-TB1-5, TMR-5	16
3	CP-TB1-14, TMR-2	16
4	CP-TB1-15, TMR-1	16

VOLTAGE AND FREQUENCY SENSING

A. DIFFERENTIAL TYPE VOLTAGE SENSING ON ALL PHASES OF NORMAL SOURCE. DROPOUT SETTING SELECTABLE AT 90, 85, 80 OR 70% OF NOMINAL. FACTORY SET AT 85%. PICKUP VOLTAGE ADJUSTABLE AT 90 OR 95% OF NOMINAL. (DEFAULT IS 95% IF DROPOUT IS SET TO 90%). FACTORY SET AT 90%. (REFER TO THE OPERATOR'S MANUAL FURNISHED WITH EACH TRANSFER SWITCH REGARDING CONTROL PANEL SETTINGS).

B. SINGLE PHASE VOLTAGE SENSING OF EMERGENCY SOURCE. NON-ADJUSTABLE DROPOUT SETTING AT 75% OF NOMINAL. NON-ADJUSTABLE PICKUP SETTING AT 90% OF NOMINAL.

C. FREQUENCY SENSING OF EMERGENCY SOURCE. NON-ADJUSTABLE DROPOUT SETTING AT 85% OF NOMINAL. NON-ADJUSTABLE PICKUP SETTING AT 95% OF NOMINAL.

TIME DELAYS

A. MOMENTARY NORMAL SOURCE OUTAGE DELAY ACTIVATED WHEN THE NORMAL SOURCE FAILS. DEACTIVATED WHEN THE NORMAL SOURCE IS ACCEPTABLE. PROVIDES A SELECTABLE (1 OR 3 SECOND) DELAY ON TRANSFER AND ENGINE STARTING SIGNALS. FACTORY SET AT 3 SECONDS. (REFER TO THE OPERATOR'S MANUAL FURNISHED WITH EACH TRANSFER SWITCH REGARDING CONTROL PANEL SETTINGS).

B. TRANSFER TO EMERGENCY DELAY- ACTIVATED AFTER THE MOMENTARY NORMAL SOURCE OUTAGE DELAY EXPIRES AND THE EMERGENCY SOURCE IS SENSED TO BE ACCEPTABLE. TRANSFER TO EMERGENCY IS COMMITTED TO ON INITIATION OF DELAY. DEACTIVATED WHEN THE EMERGENCY SOURCE IS UNACCEPTABLE. PROVIDES AN ADJUSTABLE DELAY FROM 0 TO 5 MINUTES. FACTORY SET AT 0 MINUTES. (REFER TO OPERATOR'S MANUAL FURNISHED WITH EACH TRANSFER SWITCH REGARDING CONTROL PANEL SETTINGS).

C. RETRANSFER TO NORMAL DELAY- ACTIVATED WHEN THE NORMAL SOURCE IS ACCEPTABLE. DEACTIVATED WHEN THE NORMAL SOURCE FAILS WITH NO TRANSFER TO NORMAL. ALSO DEACTIVATED WHEN THE EMERGENCY SOURCE FAILS WHILE THE NORMAL SOURCE IS ACCEPTABLE WITH TRANSFER TO NORMAL. ADJUSTABLE DELAY FROM 1 SECOND TO 30 MINUTES. FACTORY SET TO 30 MINUTES. (REFER TO THE OPERATOR'S MANUAL FURNISHED WITH EACH TRANSFER SWITCH REGARDING CONTROL PANEL SETTINGS).

D. UNLOADED RUNNING (ENGINE COOLDOWN) DELAY- ACTIVATED ON EXPIRATION OF RETRANSFER TO NORMAL DELAY OR FOLLOWING EXPIRATION OF THE NORMAL SOURCE OUTAGE DELAY WITHOUT A COMMIT TO TRANSFER TO EMERGENCY. NON-ADJUSTABLE DELAY OF 5 MINUTES.

E. MOMENTARY EMERGENCY SOURCE OUTAGE DELAY--ACTIVATED WHEN THE SWITCH IS IN THE EMERGENCY POSITION AND THE EMERGENCY SOURCE FAILS. FACTORY SET AT 4 SECONDS. RESET IF EMERGENCY RESTORES WITHIN 4 SECONDS.

ENGINE CONTROL CONTACTS

ONE SET OF FORM C CONTACTS (1 N/O & 1 N/C) THAT CHANGE POSITION ON EXPIRATION OF THE NORMAL SOURCE OUTAGE DELAY AND RESET ON EXPIRATION OF THE UNLOADED RUNNING (ENGINE COOLDOWN) DELAY. OUTPUT CONTACTS (NR) ARE RATED 5 AMPS RESISTIVE AT 28V DC OR 120V AC MAXIMUM.

OPERATOR INTERFACE INDICATORS & CONTROLS MEMBRANE TYPE

A. TRANSFER SWITCH TEST – MOMENTARY PUSHBUTTON TO SIMULATE NORMAL SOURCE FAILURE SEQUENCE OF OPERATION. PRESS AND HOLD FOR AT LEAST 15 SECONDS TO ALLOW TIME FOR ENGINE-GENERATOR SET TO START.

B. BYPASS TIME DELAY– MOMENTARY PUSHBUTTON TO BYPASS EITHER THE TRANSFER TO EMERGENCY DELAY, ENGINE EXERCISER PERIOD OR THE RETRANSFER TO NORMAL DELAY DEPENDING ON WHICH DELAY IS ACTIVE AT THE TIME THE PUSHBUTTON IS ACTIVATED.

C. SET ENGINE EXERCISER – MOMENTARY PUSHBUTTON TO ACTIVATE A SEVEN (7) DAY TIMER FOR AUTOMATIC WEEKLY TESTING OF THE ENGINE GENERATOR SET EITHER WITH OR WITHOUT LOAD TRANSFER. THE TIMER IS POWERED BY A NON-RECHARGEABLE 9V BATTERY WHEN NORMAL AND EMERGENCY SOURCES ARE UNAVAILABLE. DEPRESSING THE MOMENTARY PUSHBUTTON FOR 5 SECONDS SETS THE TIME OF WEEK AT WHICH TESTING IS TO OCCUR. THE FEATURE IS ACTIVATED BY SETTING A DIP SELECTOR SWITCH ON THE CONTROL PANEL. ENGINE START WITH OR WITHOUT LOAD TRANSFER IS SELECTED WITH A SECOND DIP SELECTOR SWITCH ON THE CONTROL PANEL. FACTORY SET TO DISABLED, NO LOAD. (REFER TO THE OPERATOR'S MANUAL FURNISHED WITH EACH TRANSFER SWITCH REGARDING CONTROL PANEL SETTINGS).

D. LOAD CONNECTED TO INDICATORS
GREEN LED INDICATOR TO INDICATE WHEN THE TRANSFER SWITCH LOAD IS CONNECTED TO THE NORMAL SOURCE.
RED LED INDICATOR TO INDICATE WHEN THE TRANSFER SWITCH IS CONNECTED TO THE EMERGENCY SOURCE.

E. SOURCE AVAILABLE INDICATORS
GREEN LED INDICATOR TO INDICATE WHEN THE NORMAL SOURCE IS AVAILABLE.
RED LED INDICATOR TO INDICATE WHEN THE EMERGENCY SOURCE IS AVAILABLE.

REMOTE CONTROL FEATURES

THE FOLLOWING CONTROL PANEL INPUTS PROVIDE REMOTE CONTROL FUNCTIONS FOR THE AUTOMATIC TRANSFER SWITCH. EACH CONTROL FUNCTION CAN BE IMPLEMENTED BY THE CUSTOMER PROVIDING THE FORM OF CONTROL CONTACT DESCRIBED. EACH CONTROL CONTACT MUST BE SUITABLE FOR A 5V DC LOW ENERGY CIRCUIT. EACH CONTROL FEATURE IS ACTIVATED BY SETTING A DIP TYPE SELECTOR SWITCH ON THE CONTROL PANEL. (REFER TO THE OPERATOR'S MANUAL FURNISHED WITH EACH TRANSFER SWITCH REGARDING CONTROL PANEL SETTINGS).

A. REMOTE TEST FEATURE– REQUIRES A CUSTOMER SUPPLIED, REMOTE, NORMALLY CLOSED CONTACT. OPENING OF THE CONTACT SIMULATES A FAILURE OF THE NORMAL SOURCE SIMILAR TO THE SEQUENCE OUTLINED FOR THE TRANSFER SWITCH TEST PUSHBUTTON. THE TRANSFER SWITCH WILL REMAIN CONNECTED TO THE EMERGENCY SOURCE UNDER ALL CONDITIONS WHILE THE CONTACT IS OPEN.

B. REMOTE TRANSFER TO EMERGENCY FEATURE REQUIRES A CUSTOMER SUPPLIED, REMOTE, NORMALLY CLOSED CONTACT. OPENING OF THE CONTACT CAUSES ENGINE START AND TRANSFER TO THE EMERGENCY SOURCE. RECLOSURE OF THE CONTACT ACTIVATES THE RETRANSFER TO NORMAL DELAY PRIOR TO RETRANSFER. IN THE EVENT THAT THE EMERGENCY SOURCE FAILS WHILE THE TRANSFER SWITCH IS CONNECTED TO EMERGENCY AND THE REMOTE CONTACT IS OPEN, THE TRANSFER SWITCH WILL AUTOMATICALLY RETRANSFER TO THE NORMAL SOURCE.

C. INHIBIT TRANSFER TO EMERGENCY FEATURE– REQUIRES A CUSTOMER SUPPLIED, REMOTE, NORMALLY CLOSED CONTACT. OPENING OF THE CONTACT WILL PROHIBIT THE TRANSFER SWITCH FROM TRANSFERRING TO THE EMERGENCY SOURCE WHILE CONNECTED TO THE NORMAL SOURCE.

D. BYPASS TRANSFER TIME DELAY FEATURE- REQUIRES A CUSTOMER SUPPLIED, REMOTE, NORMALLY CLOSED CONTACT. OPENING OF THE CONTACT BYPASSES THE RETRANSFER TO NORMAL DELAY IF ACTIVE.

LOAD DISCONNECT FEATURE

ONE SET OF FORM C CONTACTS (1 N/O & 1 N/C) THAT CHANGE POSITION ON ACTIVATION OF A SELECTABLE TIME DELAY BEFORE TRANSFER (LD TDBT) AND RESET EITHER IMMEDIATELY FOLLOWING TRANSFER OR FOR THE SAME DELAY AS SET FOR PRE-SIGNAL BEFORE TRANSFER. SELECTABLE AS 0, 3, 10 OR 20 SECONDS. FACTORY SET AT 0. (REFER TO THE OPERATOR'S MANUAL FURNISHED WITH EACH TRANSFER SWITCH REGARDING CONTROL PANEL SETTINGS). OUTPUT CONTACTS (OP) ARE RATED 5 AMPS RESISTIVE AT 28V DC OR 120V AC MAXIMUM.

MOTOR LOAD TRANSFER FEATURE

INPHASE TRANSFER CONTROL LOGIC TO INITIATE AN INPHASE TRANSFER OF MOTOR LOADS BETWEEN LIVE SOURCES. USED TO HELP PREVENT NUISANCE TRIPPING OF DISTRIBUTION CIRCUIT BREAKERS AND POSSIBLE DAMAGE TO MECHANICAL LOADS ASSOCIATED WITH OUT OF PHASE TRANSFER. ACTIVATED BY SETTING A DIP SWITCH ON THE CONTROL PANEL. FACTORY SET AS DISABLED. (REFER TO OPERATOR'S MANUAL FURNISHED WITH EACH TRANSFER SWITCH REGARDING CONTROL PANEL SETTINGS).

OTHER STANDARD FEATURES

A. SOLID NEUTRAL CONNECTION WITH FULL RATED TERMINAL LUGS FOR NORMAL, EMERGENCY AND LOAD.

B. EQUIPMENT GROUND STUD FOR INSTALLATION OF CUSTOMER PROVIDED GROUND TERMINATIONS.

PROGRAMMABLE ENGINE EXERCISER (ACCESSORY 11CD)

A PROGRAMMABLE SEVEN (7) DAY ELECTRONIC TIME SWITCH FOR AUTOMATIC WEEKLY TESTING OF THE ENGINE GENERATOR SET EITHER WITH OR WITHOUT LOAD. EACH DAY OF THE WEEK IS INDIVIDUALLY PROGRAMMABLE. THE TIME OF DAY IS PRESERVED FOR UP TO 150 HOURES BY A BATTERY BUILT INTO THE ELECTRONIC TIME SWITCH. THE FEATURE IS ACTIVATED BY SETTING A DIP SELECTOR SWITCH ON THE CONTROL PANEL. ENGINE START WITH OR WITHOUT LOAD TRANSFER IS SELECTED WITH A SECOND DIP SELECTOR SWITCH ON THE CONTROL PANEL. (REFER TO THE OPERATOR'S MANUAL FURNISHED WITH EACH TRANSFER SWITCH REGARDING CONTROL PANEL AND TIME SETTINGS).

SERIAL COMMUNICATIONS INTERFACE (ACCESSORY 72A)

RS-485 SERIAL INTERFACE TO CONTROL PANEL FOR REMOTE MONITORING AND CONTROL FROM ASCO COMMUNICATIONS BASED PRODUCTS.

ACC. 14AA	(2) AUXILIARY CONTACT CLOSED ON NORMAL.
ACC 14BA	(2) AUXILIARY CONTACT CLOSED ON EMERGENCY.
ACC. 44A	STRIP HEATER, THERMOSTAT & TB. CUSTOMER POWER SUPPLY 120VAC.
ACC. 44G	STRIP HEATER, THERMOSTAT & TRANSFOMER. POWER SUPPLY FROM LOAD TERMINALS OF TRANSFER SWITCH.
ACC. 37B	EXTENSION HARNESS FOR UNITS SHIPPED OPEN TO ACCOMODATE CUSTOMER MOUNTING OF CONTROLS AND SWITCH. EXTENSION IS 1828mm (72IN) LONG.

WIRING DIAGRAM, ASCO 300 AUTOMATIC TRANSFER SWITCHES

DRAWN	DATE	CHECKED	DATE	APP. ENGR.	DATE	APP. ENGR.	DATE
CC	2/95					SH	2/95

Automatic Switch Co.© FLORHAM PARK, N.J. U.S.A.

PROPERTY OF AUTOMATIC SWITCH COMPANY. USE PERMITTED FOR OUR WORK ONLY. ALL RIGHTS OF DESIGN OR INVENTION ARE RESERVED.

ECR NO. | REV CHKD | CHKD | DATE | APPD.

DS 493577

SHEET 2OF2

Katolight Service - Master Repair Manual - Page 3757

Operator's Manual

ASCO® Series 300 Automatic Transfer Switches D design, 30 through 230 amps

⚠ DANGER

DANGER is used in this manual to warn of high voltages capable of causing shock, burns, or death.

⚠ WARNING

WARNING is used in this manual to warn of possible personal injury.

⚠ CAUTION

CAUTION is used in this manual to warn of possible equipment damage.

An experienced licensed electrician must install the ATS.



30–200 amp. sizes

Refer to the outline and wiring drawings provided with your ASCO Series 300 ATS for all installation details.

ASCO Series 300 Automatic Transfer Switches (ATSs) are Listed under Underwriters Laboratories UL 1008 Standard for Safety for Automatic Transfer Switches. ASCO Series 300s are also Listed under CSA C22.2 No. 178 Standard for Automatic Transfer Switches. All control features are UL Component Recognized, which assures that ASCO automatic transfer switches meet OSHA Safety Requirements and will be acceptable to electrical inspectors.

ASCO Series 300 Automatic Transfer Switches are suitable for emergency and standby system applications. They meet emergency system rating requirements as defined in National Electrical Code (NEC) Article 700 and UL 1008. Also, they are suitable for the requirements of NEC Article 517 – Health Care Facilities, NEC Article 701 – Legally Required Standby Systems, NEC Article 702 – Optional Standby Systems, NFPA 99 Health Care Facilities, and NFPA 110 Emergency and Standby Power Systems.

Rating Label

Each automatic transfer switch contains a rating label to define the loads and fault circuit withstand / closing ratings. Refer to the label on the transfer switch for specific values.

⚠ WARNING

Do not exceed the values on the rating label. Exceeding the rating can cause personal injury or serious equipment damage.

TABLE OF CONTENTS

	section
INSTALLATION	1
SEQUENCE OF OPERATION	2
TESTING & SERVICE	3
ADJUSTMENTS	4
CONTROL FEATURES	5
INDEX	back cover

ASCO POWER TECHNOLOGIES L.P. 50 Hanover Road, Florham Park, New Jersey 07932–1591 USA
telephone 1 800 937–2726 (ASCO), for service call 1 800 800–2726 (ASCO) www.asco.com

381333–228 C

ASCO POWER TECHNOLOGIES CANADA PO Box 1238, 17 Airport Road, Brantford, Ontario, Canada N3T 5T3
telephone 519 758–8450, fax 519 758–0876, for service call 1 888 234–2726 (ASCO) www.asco.ca

Nameplate

The Transfer Switch nameplate includes data for each specific ASCO Series 300 ATS. Use the ATS only within the limits shown on this nameplate.

Catalog Number Identification

A typical Catalog Number is shown below with its elements explained. The example is for a Series 300 ATS with switched neutral, 3 pole, 200 amp, 480 V, in a Type 1 enclosure:

D 300 B 3 200 N 1 C

Neutral	Phase Poles	Amperes	Voltage		Controller	Enclosure
B – switched	2 – single Ø	30	A 115	K 415	1 – standard	C – type 1
C – overlapping	3 – three Ø	70	B 120	L 440	1X – if accessories ordered	F – type 3R
blank – solid		104	C 208	M 460		G – type 4
		150	D 220	N 480		L – type 12
		200 *	E 230	P 550		blank – open type
			F 240	Q 575		
			H 380	R 600		
			J 400			

* 200 amp. limited to 480 volts

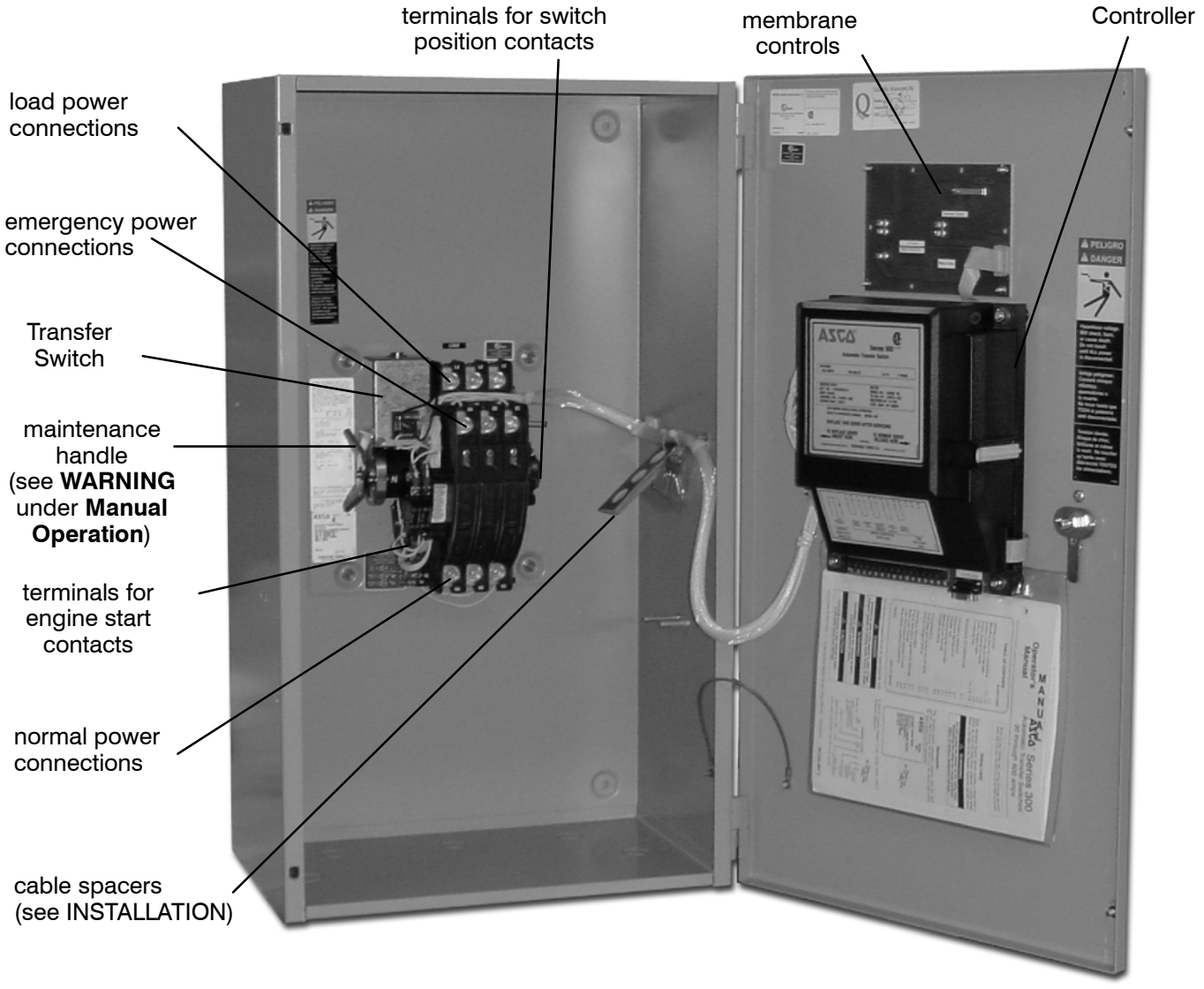

200 amp. size in typical enclosure with location of customer connections

Catalog Number Identification

A typical Catalog Number is shown below with its elements explained. The example is for a Series 300 ATS with switched neutral, 3 pole, 230 amp, 480 V, in a Type 1 enclosure:

D 300 | B | 3 | 230 | N | 1 | C

Neutral	Phase Poles	Amperes	Voltage	Controller	Enclosure
B – switched C – overlapping blank – solid	2 – single Ø 3 – three Ø	230 **	A 115 B 120 C 208 D 220 E 230 F 240 H 380 J 400 K 415 L 440 M 460 N 480	1 – standard 1X – if accessories ordered	C – type 1 F – type 3R G – type 4 L – type 12 blank – open type

** 230 amp. limited to 480 volts

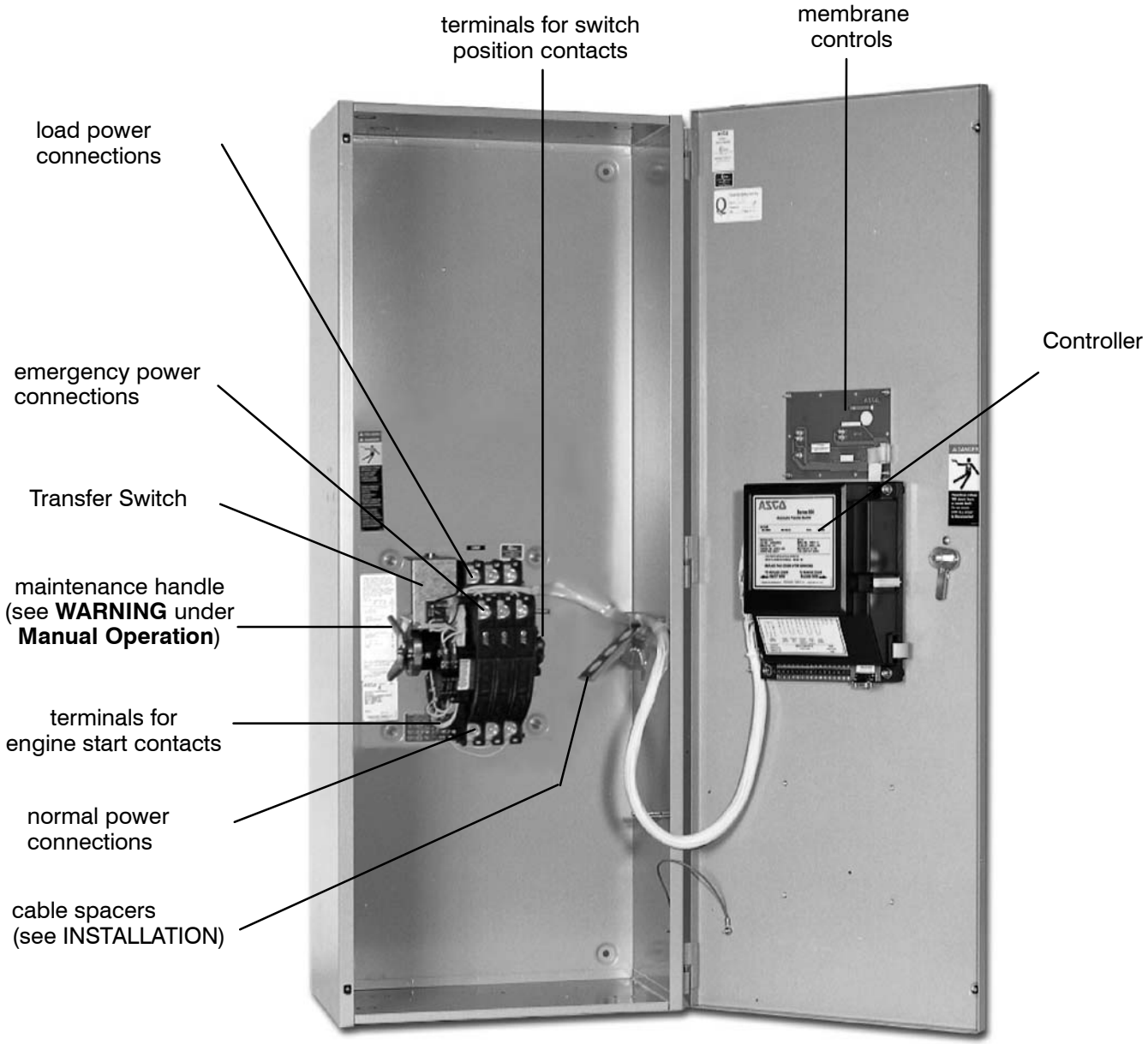

230 amp. size in typical enclosure with location of customer connections

SECTION 1 INSTALLATION

Series 300 Automatic Transfer Switches are factory wired and tested. Installation requires skid removal then securing the enclosure to the supporting foundation.

Mounting

Refer to the applicable enclosure outline drawing furnished with this switch and mount the Series 300 according to details and instructions shown on diagram.

Line Connections

Refer to the Wiring Diagram provided with your Series 300 ATS. All wiring must be made in accordance with the National Electrical Code and local codes.

It is unnecessary to remove pole covers from the transfer switch. If you do remove them, reinstall them carefully.

⚠ DANGER

De–energize the conductors before making any line or auxiliary circuitry connections. Be sure that Normal and Emergency line connections are in proper phase rotation. Place engine generator starting control in the OFF position. Make sure engine generator is not in operation.

⚠ CAUTION

Protect the automatic transfer switch from construction grit and metal chips to prevent malfunction or shortened life of the ATS.

Connecting Power Conductors

After the power cables have been tested, connect them to the appropriate terminal lugs on the transfer switch as shown on the wiring diagram provided with this Series 300. Make sure the lugs provided are suitable for use with the cables being installed. Standard terminal lugs are solderless screw type and will accept the wire sizes listed on the drawings provided with the Series 300. Be careful when stripping insulation from the cables; avoid nicking or ringing the conductor. Remove surface oxides from cables by cleaning with a wire brush. When aluminum cable is used, apply joint compound to conductors. Tighten cable lugs to the torque specified on rating label.

Three cable spacers are included with 150, 200, and 230 ampere transfer switches. When installing power cables, run the cables through the cable spacers as shown in Figure 1–1. Position cable spacers within 1½ inches from lugs.

⚠ CAUTION

The cable spacers must be located as shown for 150, 200, and 230 ampere transfer switches.

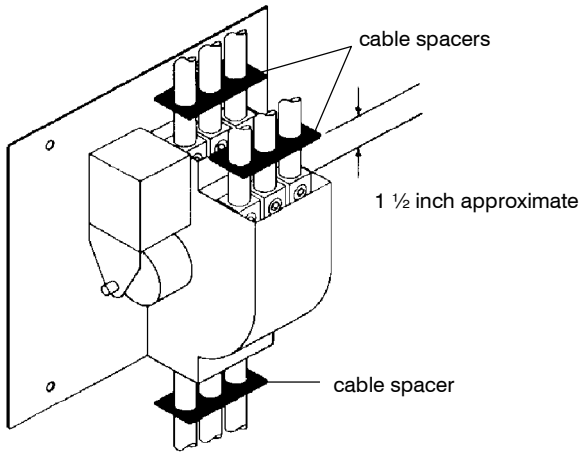

Figure 1–1. Cable spacers for 150, 200, & 230 amp. transfer switches.

Controller Ground

A grounding wire must be connected to the controller's lower left mounting stud. Because the controller is mounted on the enclosure door, a conductive strap must be used between the enclosure and the door. This connection provides proper grounding which does not rely upon the door hinges.

Harnesses

The transfer switch is connected to the left side of the controller by a plug–in harness (two plugs).

Auxiliary Circuits

Connect auxiliary circuit wires to appropriate terminals on transfer switch as shown on the wiring diagram provided with this Series 300 Automatic Transfer Switch. Make the necessary auxiliary connections by referring to **Section 5, Control Features**.

Engine Starting Contacts

Customer connections for engine control contact and TS auxiliary contacts connections are located on terminal block TB which is mounted on the front lower left of the transfer switch. Refer to wiring diagram provided with the Series 300 ATS and connect the engine start wires to the appropriate terminals. See Figure 1–2 and Table A.

Table A. Engine start connections.

When normal source fails	Terminals on transfer switch
contact closes	TB14 and TB15
contact opens	TB14 and TB16

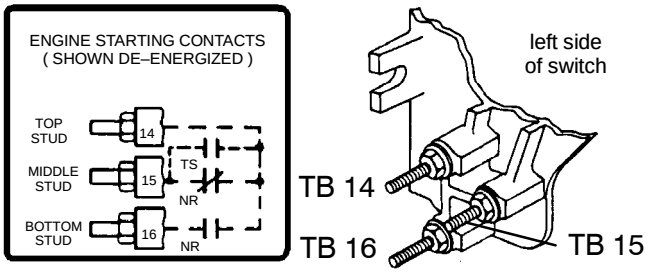

Figure 1–2. Engine starting contact label and terminals located on the transfer switch.

Connections to Controller for other Control Features

(located on bottom of Controller)

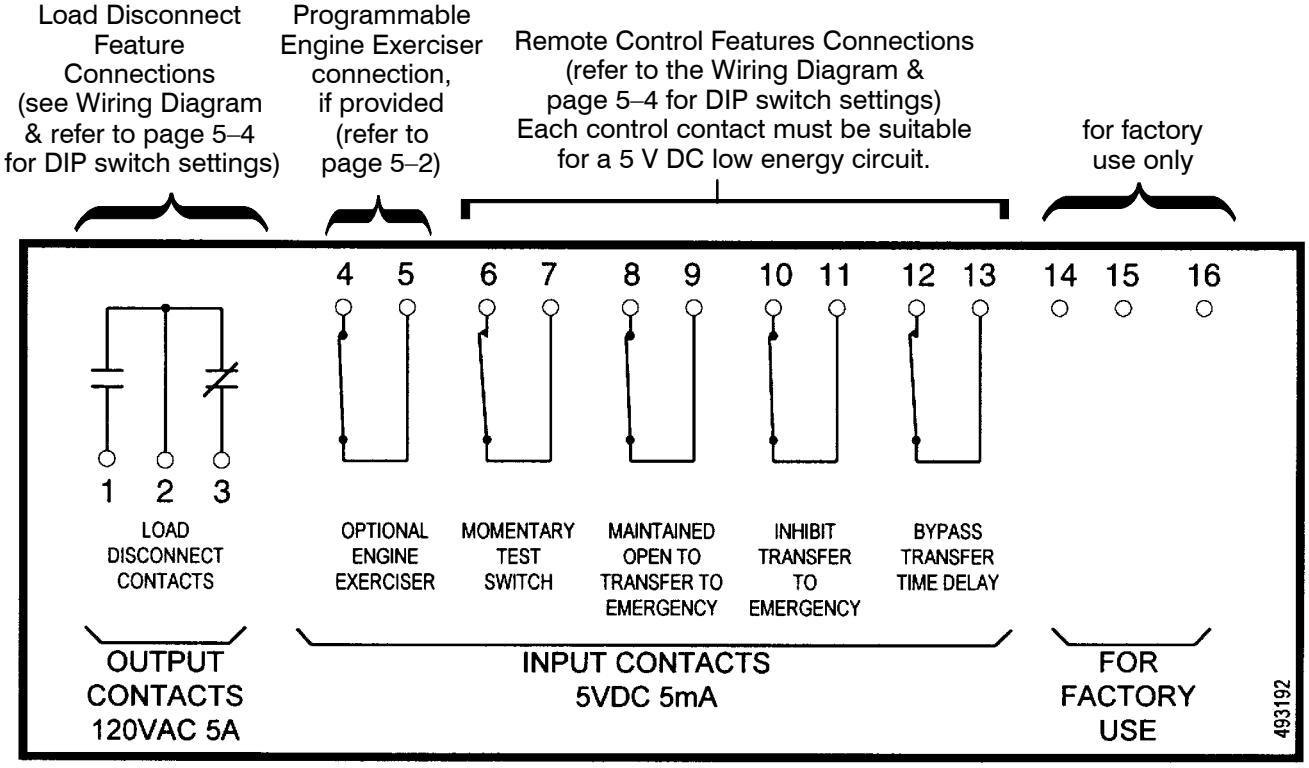

Figure 1–3. Input / output label on the Controller showing possible connections to the lower terminal block.

Functional Test

The Functional Test consists of three checks: manual operation, voltage checks, and electrical operation.

⚠ CAUTION

Do these checks in the order presented to avoid damaging the automatic transfer switch.

Read all instructions on the Wiring Diagram and labels affixed to the automatic transfer switch. Note the control features that are provided and review their operation before proceeding.

1 – Manual Operation Test

A maintenance handle is provided on the Transfer Switch for maintenance purposes only. Manual operation of the transfer switch should be checked before it is energized (operated electrically).

⚠ WARNING

Do not manually operate the transfer switch until both power sources are disconnected: open both circuit breakers.

1. After deenergizing both power sources, open the enclosure door. Locate and the maintenance handle on the left side of the transfer switch frame. See Figure 1–4.
2. Grasp the attached maintenance handle and turn it with thumb and fingers as shown to manually operate it. The maintenance handle turns the opposite direction of the weight. Move it up or down as shown to manually operate the transfer switch. It should operate smoothly without any binding. If it does not, check for shipping damage or construction debris.

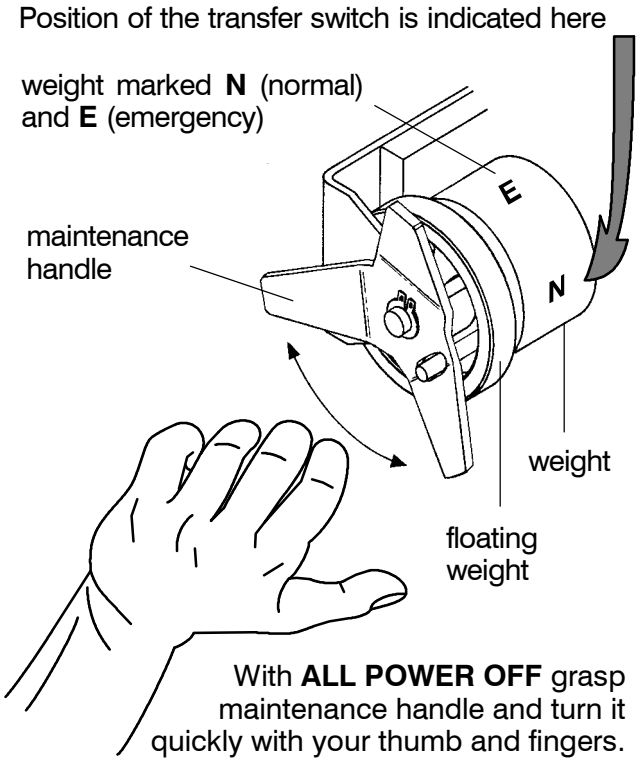

Figure 1–4. Maintenance handle and positions.

3. Return the transfer switch to the Normal position.

Note: If Normal and Emergency connections are reversed this operation is also reversed.

⚠ WARNING

Verify that the maintenance handle has been removed before proceeding!

Now continue to **2 – Voltage Checks** on next page.

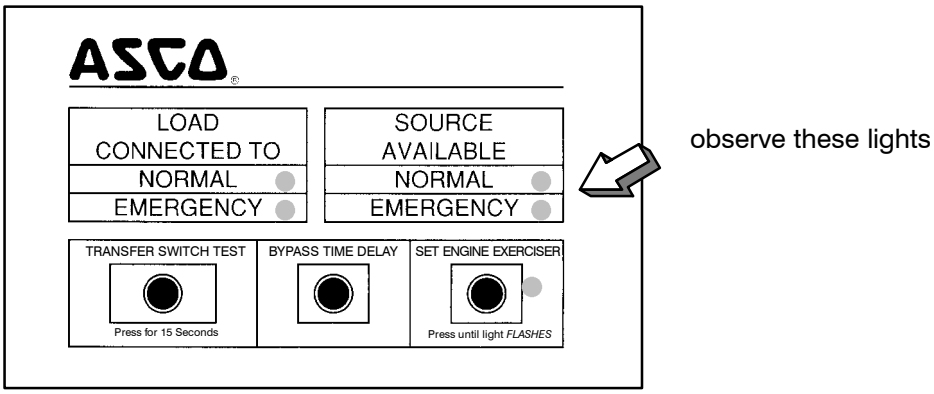

Figure 1–5. Standard controls and indicators.

2 – Voltage Checks

First check nameplate on transfer switch; rated voltage must be the same as normal and emergency line voltages.

⚠ CAUTION

Verify that the feeders have been connected to the proper lugs.

⚠ DANGER

Use extreme caution when using a meter to measure voltages in the following steps. Do not touch power terminals; shock, burns, or death could result !

Perform steps 1 through 6 at the right. Observe the status lights. See Figure 1–5.

- ● Black circle means light is on.
- ❍ White circle means light is off.

* If necessary, adjust voltage regulator on the generator according to the manufacturer's recommendations. The Automatic Transfer Switch will respond only to the rated voltage specified on the Transfer Switch nameplate.

Also see page 4–1 for the HI–LOW voltage adjust setting in the controller. The LOW setting shifts all voltage settings down 4.2%; for example, 240 V to 230 V.

1	Close the normal source circuit breaker. The *Load Connected To Normal* and the *Normal Source Available* lights should come on.	SOURCE AVAILABLE NORMAL ● EMERGENCY ○
2	Use an accurate voltmeter to check phase to phase and phase to neutral voltages present at the transfer switch normal source terminals.	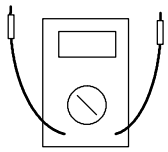
3	Close the emergency source circuit breaker. (Start generator, if necessary.) The *Load Connected To Normal* and the *Emergency Source Available* lights should come on.	SOURCE AVAILABLE NORMAL ○ EMERGENCY ●
4	Use an accurate voltmeter to check phase to phase and phase to neutral voltages present at the transfer switch emergency source terminals.*	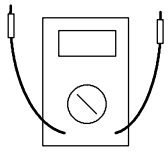
5	Use a phase rotation meter to check phase rotation of emergency source; it must be the same as the normal source.	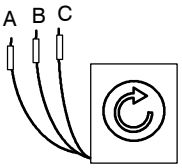
6	Shut down the engine–generator, if applicable. The *Emergency Source Accepted* light should go off. Then put the starting control selector switch (on the generator set) in the *automatic* position. Close enclosure door.	SOURCE AVAILABLE NORMAL ○ EMERGENCY ○

Now continue to **3 – Electrical Operation** on next page.

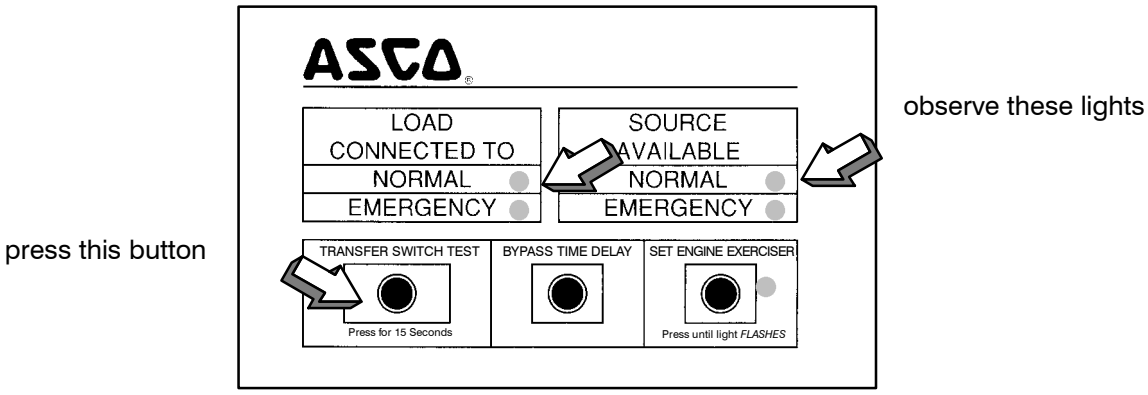

Figure 1–6. Standard controls and indicators.

3 – Electrical Operation

First check nameplate on transfer switch; rated voltage must be the same as normal and emergency line voltages.

⚠ CAUTION

Verify that the feeders have been connected to the proper lugs.

⚠ DANGER

Use extreme caution when using a meter to measure voltages in the following steps. Do not touch power terminals; shock, burns, or death could result !

Perform steps 1 through 8 at the right. Observe the status lights. See Figure 1–6.

- ● Black circle means light is on.
- ❍ White circle means light is off.

NOTE: If Motor Load Transfer feature is activated, then transfer may not occur immediately after the respective time delays. Transfer will only occur when the phase relationship between sources is correct.

This completes the Functional Test of the ASCO Series 300 Automatic Transfer Switch. Leave the engine–generator starting control in the *automatic* position.

1	The normal source must be available and the generator must be ready to start. Check that the *Normal Source Available* light is on.	SOURCE AVAILABLE NORMAL ● EMERGENCY ○
2	Press and hold the *Transfer Switch Test* button until the engine starts and runs. This should happen within 15 sec.	TRANSFER SWITCH TEST
3	The *Emergency Source Available* light should come on.	SOURCE AVAILABLE NORMAL ● EMERGENCY ●
4	If the *transfer to emergency delay* is used the transfer should occurs after a time delay (up to 5 minutes). For immediate transfer press the *Bypass Time Delay* button.	BYPASS TIME DELAY
5	The transfer switch should transfer to the Emergency position. The *Load Connected to Emergency* light should come on and the *Load Connected to Normal* light should go off.	LOAD CONNECTED TO NORMAL ○ EMERGENCY ●
6	If the *retransfer to normal delay* is used the retransfer should occur after a time delay (up to 30 minutes). For immediate retransfer press the *Bypass Time Delay* button.	BYPASS TIME DELAY
7	The transfer switch should transfer back to the Normal position. The *Load Connected to Normal* light should come on and the *Load Connected to Emergency* light should go off.	LOAD CONNECTED TO NORMAL ● EMERGENCY ○
8	The *unloaded running delay* keeps the generator running for 5 minutes (cool–down period). Then the generator should stop and the *Emergency Source Available* light should go off.	SOURCE AVAILABLE NORMAL ● EMERGENCY ○

SECTION 2 SEQUENCE OF OPERATION

Transfer To Emergency

The sequence for load transfer to emergency source begins automatically when normal source voltage falls below the preset dropout point or when *Transfer Switch Test* button is pressed. An under voltage condition on any phase of the normal source is detected by the sensor.

When the normal source voltage fails or the *Transfer Switch Test* button is pressed, the SE relay de-energizes and relay NR begins its timing cycle (1 or 3 seconds, *momentary normal source outage delay*). The NR relay is provided with a time delay on dropout to override momentary outages and prevent nuisance starting of the engine-driven generator. If the normal source voltage returns above the sensor dropout setting before the time delay expires, the NR relay timing cycle is reset to zero and relay SE energizes.

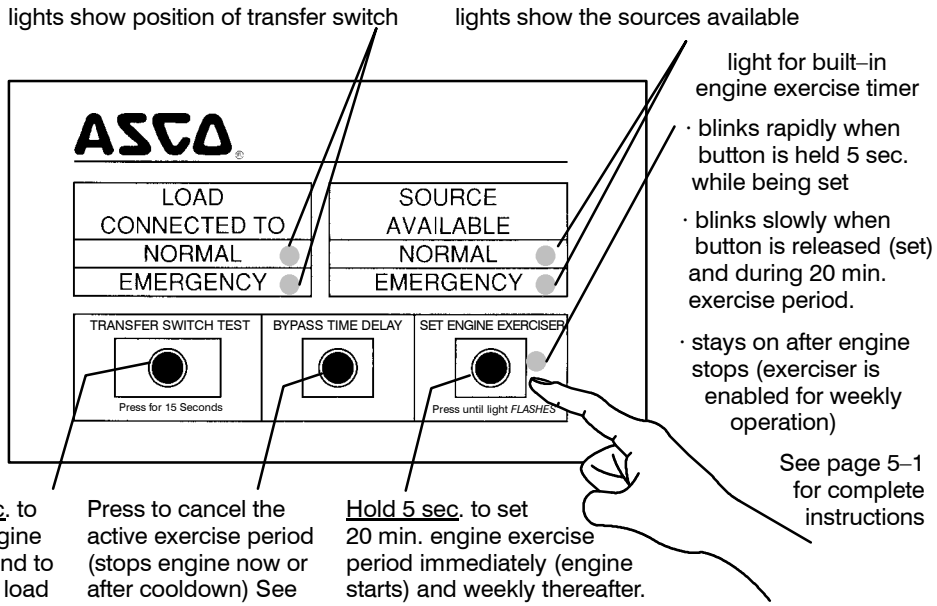

Figure 2–1. Membrane controls and indicator lights.

If the normal source voltage does not return above the sensor dropout setting before the time delay expires, the NR relay de-energizes and signals the engine-driven generator to start. At the same time, a voltage and frequency sensor begins monitoring the emergency source. The sensor will accept the emergency source only when both voltage and frequency reach preset pickup points. Usually about ten seconds elapse from dropout of the NR relay to acceptance by the sensor. This time span occurs because the engine-driven generator must crank, start, and run up to nominal pickup points. For this reason, if the *Transfer Switch Test* button is pressed it must be held for 15 seconds. If the emergency source is available immediately, the sensor may accept it as soon as NR relay drops out.

When the emergency source is accepted by the sensor, relay ER begins its timing cycle (*transfer to emergency delay*). ER relay is provided with an adjustable (0 to 5 minutes) time delay on pickup to delay transfer of the load to the emergency source. For immediate transfer press *Bypass Time Delay* button.

ER relay energizes, the TS coil is energized, the transfer switch operates, and all switch contacts (mains, controls, auxiliaries) reverse position. The transfer switch is now supplying the load from the emergency source.

The transfer switch will remain in the Emergency position until the normal source is restored. If the *Transfer Switch Test* button is used, the transfer switch will remain on emergency until the *retransfer to normal delay* times out.

Retransfer to Normal

The sequence for load retransfer to the normal source automatically begins when the voltage sensor detects restoration of the normal source. The voltage level must rise above the preset pickup point on all phases before the sensor will accept the normal source.

When the normal source is accepted by the sensor, relay SE begins its timing cycle (adjustable 1 sec. to 30 min., *retransfer to normal delay*). For immediate retransfer press *Bypass Time Delay* button. SE relay is provided with a time delay on pickup to prevent immediate load retransfer to the normal source. The delay insures that the normal source has stabilized before reconnection of vital loads. If the normal source voltage falls below the present dropout point before the time delay expires, the timing cycle is reset to zero. If the emergency source fails for more than 4 seconds during the timing cycle, ER relay drops out and the load is immediately retransferred to the normal source, if that source is acceptable.

SE relay energizes and ER relay is dropped out. The TS coil is energized, the transfer switch operates, and all switch contacts (mains, controls, auxiliaries) reverse position. The transfer switch is now supplying the load from the normal source again.

Upon retransfer to the normal source, NR relay begins its timing cycle (*unloaded running delay [engine cooldown]*). NR relay is provided with a 5 minute time delay on pickup to keep the engine running for a cool-down period.

NR relay energizes after the time delay and signals the engine-driven generator to shut down. All circuits are reset for any future normal source failure.

Activation of standard control features shown in Section 5 will alter the sequence of operation and introduce additional time delays during transfer operations.

SECTION 3 TESTING & SERVICE

PREVENTIVE MAINTENANCE

Reasonable care in preventive maintenance will insure high reliability and long life for the automatic transfer switch.

Operate the switch at least once a month. Perform this four step Electrical Operation Test. This is a test with load transfer.

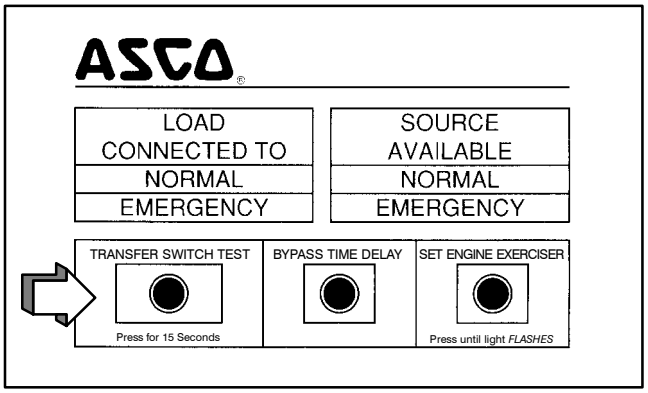

Transfer Switch Test

1.	Press and hold the door-mounted *TRANSFER SWITCH TEST* button until the engine starts and runs. This should happen within 15 seconds.
2.	The transfer switch will operate to the Emergency position. If the *Transfer To Emergency Delay* is used, the transfer will occur after a time delay (up to 5 minutes). For immediate transfer press *BYPASS TIME DELAY* button.
3.	The Transfer Switch will operate back to the Normal position after the *Retransfer To Normal Delay* (up to 30 minutes). For immediate retransfer press *BYPASS TIME DELAY* button.
4.	*Unloaded Running (Engine Cooldown) Delay* allows engine to run unloaded for 5 minutes.

Clean and inspect the switch once a year. De-energize all sources, then brush and vacuum away any excessive dust accumulation. Remove the transfer switch barriers and check contact condition. Replace contacts when pitted or worn excessively. Reinstall the barriers carefully.

Maintain transfer switch lubrication. The transfer switch has been properly lubricated, and under normal operating conditions no further lubricating is required. Renew factory lubrication if the switch is subjected to severe dust or abnormal operating conditions. Relubricate the operator if TS coil is replaced. Order **lubrication 625550–001** (Castrol *Endurex*® 4000 lubricant).

Replacement parts. Replacement parts are available in kit form. When ordering parts provide the Serial No. and Catalog No. from the transfer switch nameplate. Contact your local ASCO Power Technologies sales office or ASI. In the United States call 1–800–800–ASCO (2726), or in Canada call 1–888–234–ASCO (2726).

DISCONNECTING THE CONTROLLER

The harness disconnect plugs are furnished for repair purposes only and should not have to be unplugged. If the controller must be isolated, follow these steps carefully.

Disconnecting the Plugs

⚠ WARNING

Do not unplug the controller until step 1a. or 1b. below is completed.

1. Observe the position of the transfer switch.
   a. If the transfer switch is in the *Normal* position, place standby engine starting control in the *off* position. Then open the emergency source circuit breaker.
   b. If the transfer switch is in the *Emergency* position, open the normal source circuit breaker. Place the engine starting control in the *test* or *run* position.
2. Separate the quick disconnect plugs by squeezing the latches. Do not pull on the harness wires.
3. Label, remove, and tape the signal wires connected to the engine start terminals on the transfer switch: TB1 and TB3, or TB1 and TB2.

Reconnecting the Plugs

⚠ WARNING

Do not reconnect the controller until step 1a. or 1b. and 2 below are completed.

1. Observe the position of the transfer switch.
   a. If the transfer switch is in the *Normal* position, be sure that the standby engine starting control is still in the *off* position. The emergency source circuit breaker still should be open.
   b. If the transfer switch is in the *Emergency* position, normal source circuit breaker still should be open.
2. Reconnect the signal wires connected to the appropriate engine start terminals on the transfer switch. See **Section 1**, *Engine Starting Contacts*.
3. The harness plugs and sockets are keyed. Carefully align the plugs with the sockets and press straight in until both latches click.
4. Restore the opposite source as follows:
   a. If the transfer switch is in the *Normal* position, place the standby engine starting control in the *automatic* position. Then close the emergency source circuit breaker.
   b. If the transfer switch is in the *Emergency* position, close the normal source circuit breaker. The load will be automatically retransferred to the normal source after the *Retransfer to Normal Delay*. For immediate retransfer, press *BYPASS TIME DELAY* button. Place the engine starting control in the *automatic* position.

MANUAL LOAD TRANSFER

This procedure will manually transfer the load if the controller is disconnected.

⚠ WARNING

Do not manually operate the transfer switch until both power sources are disconnected: open both circuit breakers.

1. Open normal and emergency source circuit breakers.
2. Use the maintenance handle to manually operate transfer switch to the opposite source. See page 1–3, *Manual Operation Test*.
3. If the transfer switch is in the Emergency position manually start the engine generator and then close the emergency source circuit breaker.

TROUBLE-SHOOTING

Note the control features that are activated or furnished on the switch and review their operation. Refer to **Section 5**, **Control Features**.

⚠ WARNING

Proceed with care!
The automatic transfer switch is energized.

Table 3-1. Trouble-Shooting Checks.

PROBLEM	CHECK IN NUMERICAL SEQUENCE		
	1 OPERATION	2 GEN-SET	3 VOLTAGE
Gen-Set does not start when the *TRANSFER SWITCH TEST* button is pressed and held for 15 seconds or when the normal source fails.	Hold the *TRANSFER SWITCH TEST* button 15 sec. or the outage must be long enough to allow for the 1 or 3 sec. *Momentary Normal Source Outage Delay* plus engine cranking and starting time.	Starting control must be in automatic position. Batteries must be charged and connected. Check wiring to engine starting contacts.	—
Transfer switch does not transfer the load to emergency source after the gen-set starts.	Wait for *Transfer to Emergency Delay* (0 to 5 min.) to time out. For immediate transfer, press the *BYPASS TIME DELAY* button. If Motor Load Transfer is active, wait for in-phase condition (see below).	Generator output circuit breaker must be closed. Generator frequency must be at least 57 Hz.	Voltmeter should read at least 90% of nominal phase to phase voltage between transfer switch terminals EA and EC (or EL1 and EL2 for 2 pole switches). * * These are factory settings.
Transfer switch does not transfer the load to normal source when normal returns or when *TRANSFER SWITCH TEST* button is released.	Wait for *Retransfer to Normal Delay* (1 sec. to 30 min.) to time out. For immediate re–transfer, press *BYPASS TIME DELAY* button. If Motor Load Transfer is active, wait for in-phase condition (see below).	—	Voltmeter should read at least 90% of nominal phase to phase voltage between transfer switch terminals NB and NC, NC and NA, and NA and NB (or NL1 and NL2 for 2 pole switches).
Gen-Set does not stop after load retransfer to the normal source.	Wait for the 5 minute *Unloaded Running Delay* to time out.	Starting control must be in automatic position.	—

Trouble-Shooting the Motor Load Transfer Feature (refer to page 5–3)

⚠ DANGER

Use extreme caution when using a meter to measure voltages in the following steps. Do not touch power terminals; shock, burns, or death could result !

1. Connect a voltmeter (set for twice system phase–to–phase voltage) between Transfer Switch terminals NA and EA.
2. Manually start generator. Voltmeter needle should sweep back and forth at a regular rate between 0 and about twice system voltage.
3. Press and hold TRANSFER SWITCH TEST button. The load should transfer to emergency source when meter needle is near 0 volts. If transfer does not occur, Motor Load Transfer feature is not operating.
4. Release the **Transfer Switch Test** button. The load should retransfer back to the normal source after the *Retransfer to Normal Delay*, if used. The retransfer should occur when the needle is near 0 volts. If retransfer does not occur after the time delay, the Motor Load Transfer feature is not operating.
5. For immediate retransfer, press the BYPASS TIME DELAY button. Then disconnect the voltmeter.

If the problem is isolated to circuits on the controller or the transfer switch, call your local ASCO Power Technologies sales office or ASI. In the United States, call 1–800–800–2726. In Canada, call 1–888–234–2726. Furnish the Serial No., Bill of Material (BOM) No., & Catalog No. from transfer switch nameplate.

SECTION 4 ADJUSTMENTS

Time Delay Adjustment

Standard time delays are set to customer specifications (if none specified, standard factory settings are used).

To change a setting, follow procedure on page 4-2. Use Table 4-1 as a guide to time delay values and their corresponding adjustment DIP switch or potentiometer.

Table 4-1. Time Delay Settings

DESCRIPTION	LABELS	FACTORY SETTING	ADJUSTMENT RANGE	S3 DIP SWITCH		ADJUSTMENT POTENTIOMETER
Override Momentary Normal Source Outages	TD ES	3 seconds	1 second	Actuator 1 on		—
			3 seconds	Actuator 1 off		
Transfer to Emergency	TIMER N/E	0 minutes (full ccw)	0 to 5 minutes	—	—	P2
Override Momentary Emergency S. Outages	—	4 seconds	non-adjustable	—	—	—
Retransfer to Normal	TIMER E/N	30 minutes (full cw)	1 second to 30 minutes	—	—	P1
Unloaded Running (Engine Cooldown)	—	5 minutes	non-adjustable	—	—	—

Sensor Adjustments

Voltage and frequency sensor pickup and dropout points are set to customer specifications (if none specified, standard factory settings are used). To change a setting, follow procedure on page 4–2. Use Tables 4-2 and 4–3 for settings and corresponding DIP switch actuators.

⚠ WARNING

Any change in these settings may affect the normal operation of the automatic transfer switch. This change could allow the load circuits to remain connected to a low voltage source.

Table 4-2. Voltage and Frequency Settings. (☐ Shaded DIP switches are standard factory settings).

DESCRIPTION	LABELS	SETTING	% of nominal		S1 DIP SWITCH	
			FACT. SET	ADJ RANGE		
Normal Source Voltage	PU / N	Pickup	90 %	95 % *	Actuator 3 off	
				90 %	Actuator 3 on	
	DO / N	Dropout	85 %	90 % *	Actuator 1 off Actuator 2 off	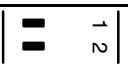
				85 %	Actuator 1 on Actuator 2 off	
				80 %	Actuator 1 off Actuator 2 on	
				70 %	Actuator 1 on Actuator 2 on	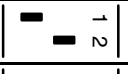
Emergency Source Voltage	– –	Pickup	90 %	non-adjustable	– –	
	– –	Dropout	75 %	non-adjustable		
Emergency Source Frequency	– –	Pickup	95 %	non-adjustable	– –	
	– –	Dropout	85 %	non-adjustable		
	60 / 50 Hz	60 / 50 Hz	60 Hz	60 Hz	Actuator 4 off	
				50 Hz	Actuator 4 on	
Voltage Phases	3 Ø , 1 Ø	3 Ø / 1 Ø	3 Ø	3 phase	Actuator 6 off	
				1 phase	Actuator 6 on	

* If dropout voltage is set to 90%, the pickup voltage must be set to 95%.

Table 4-3. Transformer Voltage Adjust.
(Low setting shifts all voltage settings down 4.2%; for example, 240 V to 230 V, or 480 V to 460 V)

DESCRIPTION	LABELS	FACTORY SETTING	ADJUSTMENT	S3 DIP SWITCH	
Voltage Adjust (4.2%)	LOW / HI	HI	LOW	Actuator 2 off	
			HI	Actuator 2 on	

⚠ WARNING

Do not make any setting changes while the controller is energized.

How to Change a Setting

1. Prevent the transfer switch from operating by disconnecting one source first, then the other, as follows:
   a. If the transfer switch is in the Normal position, open the emergency source circuit breaker. Turn the engine starting control to *off*. Then open the normal source circuit breaker.
   b. If the transfer switch is in the Emergency position, open the normal source circuit breaker. Turn engine starting control to *test* or *run*. Then open the emergency source circuit breaker.
2. Disconnect both harness plugs from controller by squeezing the latches. Do not pull on the wires.
3. Remove cover from the controller by releasing latch on right side with your thumb. See Figure 4-1.
4. Locate the appropriate adjustment potentiometer or DIP switch for the setting that you want to change. Refer to Table 4-1 and Table 4–2 on page 4-1 and Figure 4-2, Figure 4–3, Figure 4–4 on page 4–2.
5. Use a small screwdriver to turn the potentiometer clockwise to increase the time delay or counterclockwise to decrease it. See Figure 4-3.
6. Use a ball-point pen (or similar pointed tool) to slide the switch actuators left or right so they match the illustration next to the setting (left = off, right = on). Recheck the setting. See Figure 4-4.
7. Install the cover on the controller by hooking it on the left side and latching the right side.
8. Reconnect both harness plugs to the controller by aligning and pressing straight in until latches click.

⚠ WARNING

Close the enclosure door.

9. Close the enclosure door, then restore both sources:
   a. If the transfer switch is in the Normal position first close the normal source circuit breaker, then close the emergency source circuit breaker.
   b. If the transfer switch is in the Emergency position, close the normal source circuit breaker. The load will be automatically retransferred to the normal source. Then close the emergency source circuit breaker.
10. Turn the engine starting control to *automatic*.

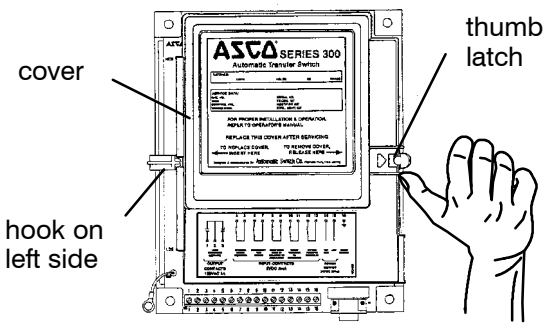

Figure 4-1. Controller cover latch.

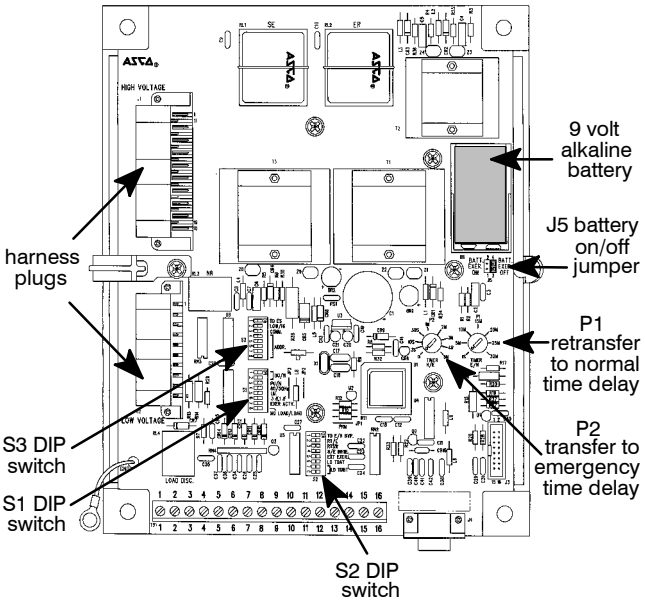

Figure 4-2. Location of potentiometers, DIP switches, battery, and battery jumper.

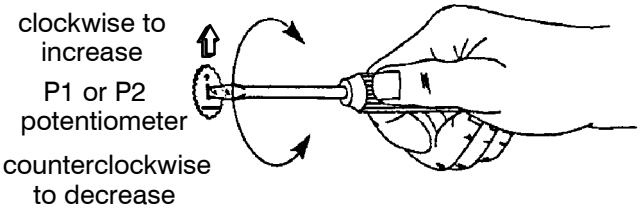

Figure 4-3. Changing time delay potentiometers.

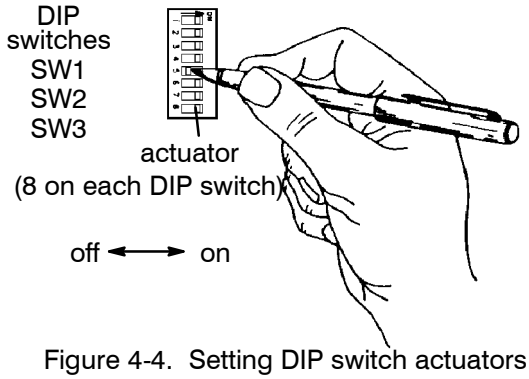

Figure 4-4. Setting DIP switch actuators.

SECTION 5 CONTROL FEATURES – ENGINE EXERCISERS

These timers periodically exercise the emergency engine-generator plant. They can be set to exercise with or without load transfer, or they can be completely disabled. The engine-generator should be exercised under load once a week for a minimum time period of 20 minutes, or follow the recommendations of the engine-generator set manufacturer. Refer to page 4–2 for location of DIP switches, battery (provided), and jumper block in the controller.

BUILT–IN ENGINE EXERCISER

The engine exerciser included in ASCO Series 300 Automatic Transfer Switches provides a once a week 20–minute exercise period. It occurs immediately when the SET ENGINE EXERCISER push button is pressed (and held for at least 5 seconds), and then at the same time weekly thereafter. A 9 volt alkaline battery (*Duracell*® MN1604, *Everready*® 522, or *Panasonic*® 6AM6) is furnished and installed in the controller to maintain the setting. The battery jumper block must be shifted to the ON position. See Figure 4–2 on page 4–2.

Fill in day and time set. Week Day _____ Time _____.

DIP Switch Settings

FUNCTION	S1 DIP SWITCH		S2 DIP SWITCH	
Std. Timer Enabled	Actuator 7 on	7	Actuator 5 on	5
Std. Timer Disabled	Actuator 7 off	7	Actuator 5 on	5
Exercise without Load	Actuator 8 off	8		
Exercise with Load	Actuator 8 on	8		

Shaded DIP switches are standard factory settings.

Press to cancel an active exercise period (stops generator).

If *Exercise with Load* is set, retransfers load to Normal, then stops generator after 5 min. cooldown.

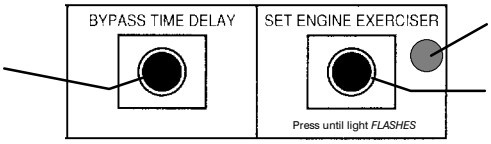

status light

Press and hold for 5 sec. or until status light blinks rapidly to set exercise period immediately and every week hereafter (generator starts).

If *Exerciser with Load* is set, transfers load to Emergency.

Figure 5-1. Operator panel pushbuttons and light.

Select below either *Exercise without Load* or *Exercise with Load* according to the setting of DIP switch S1, actuator 8. The load transfers from the Normal source to Emergency source (generator) and back again if *Exercise with Load* is selected.

Exercise without Load, DIP Switch S1, Actuator 8 off (8) How to Set Built–In Timer

Step	Push Button	Status Light	Function	Explanation
1	*SET ENGINE EXERCISER* hold 5 sec.	blinks rapidly ●○●○●○	set exercise period	Exercise the generator now and every week at this time hereafter.
2	release	blinks slowly ●○○●○○	exercise period now active	Generator starts and runs.
3	press *BYPASS TIME DELAY*	● stays on	cancel active exercise period	Generator stops.
4	—	● stays on	generator off	Exerciser enabled; repeats every 7 days.

Exercise with Load, DIP Switch S1, Actuator 8 on (8) How to Set Built–In Timer

Step	Push Button	Status Light	Function	Explanation
1	*SET ENGINE EXERCISER* hold 5 sec.	blinks rapidly ●○●○●○	set exercise period	Exercise the generator now and every week at this time hereafter.
2	release	blinks slowly ●○○●○○	exercise period now active	Generator starts and runs; the load transfers to Emergency.
3	press *BYPASS TIME DELAY*	blinks slowly ●○○●○○	cancel active exercise period	The load retransfers to Normal; then generator runs for 5 minute cooldown (light blinks slowly during cooldown).
4	—	● stays on	generator off	Exerciser enabled; repeats every 7 days.

NOTE: Every time *SET ENGINE EXERCISER* push button is pressed (held 5 seconds) the exercise period is changed.

Optional Accessory 11BG – SOURCE AVAILABILITY SIGNAL & PROGRAMMABLE ENGINE EXERCISER MODULE

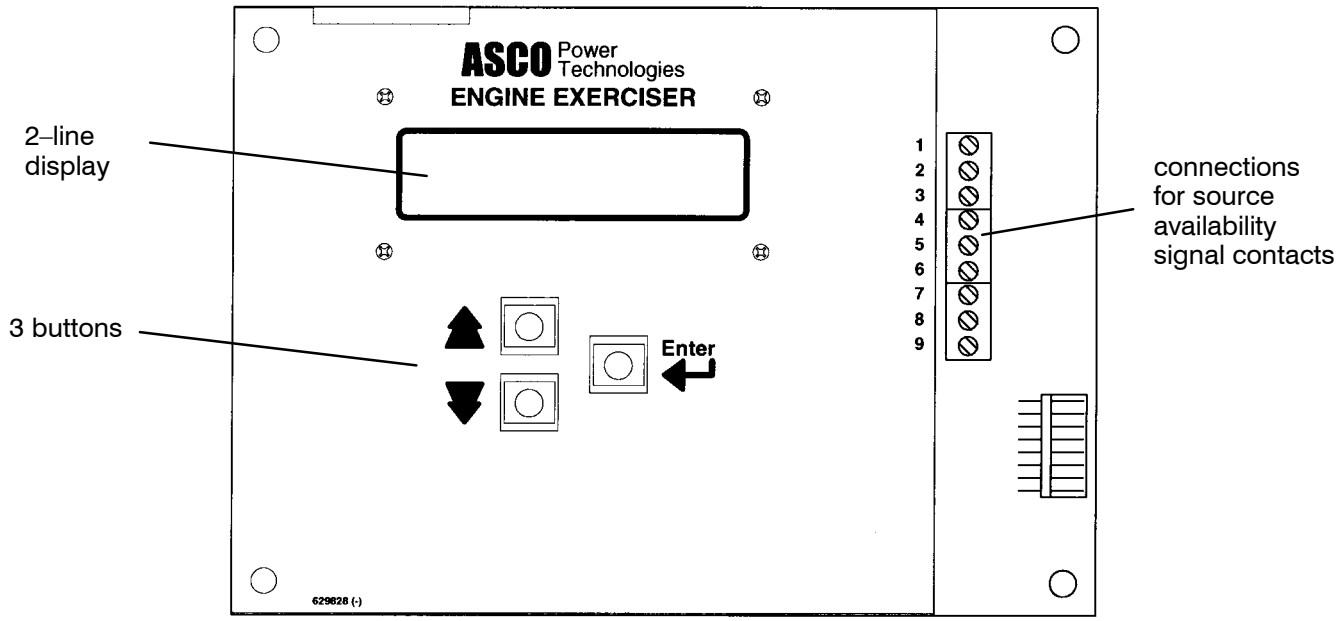

Figure 5–2. Accessory 11BG module (mounted behind operator interface and connected to the controller) includes source availability signal contacts and a programmable engine exerciser.

Source Availability Signal Contacts

The module provides one Form C contact each for the normal and emergency sources signal the acceptability of the source as sensed by the controller. The signal contacts operate in conjunction with the *Source Available* lights on the operator interface. Field wiring terminals are provided as shown in Figure 5–3 and the wiring diagram.

Contact ratings:

2 amps @ 30 Vdc, 0.5 amp. @ 125 Vac resistive

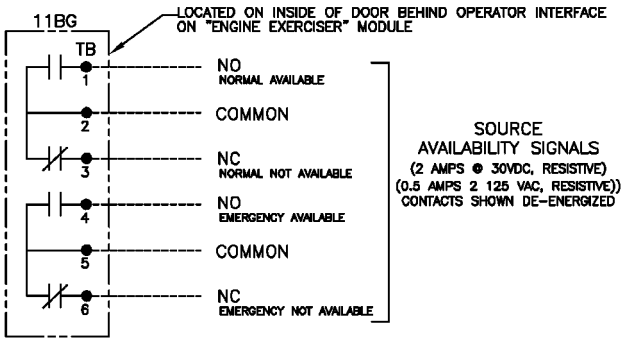

Figure 5–3. Source availability signal contacts.

Programmable Engine Exerciser

The module includes a programmable engine exerciser that provides for weekly or biweekly operation. This optional exercise timer may have to be turned on (enabled) by setting the S1 DIP switch actuator 7 to off, and S2 DIP switch actuator 5 to off. A backup battery in the controller (see page 4–2 and page 5–3) must be turned on to maintain the settings and to allow programming with the normal and emergency power turned off (page 5–1).

The programmable engine exerciser incorporates a 7 day or 14 day time base. Proper controller settings must be made to determine whether or not the test will be done with or without load transfer (S1 DIP switch actuator 8).

See next page for instructions on setting the timer.

DIP Switch Settings in the Controller

(see page 4–2)

FUNCTION	S1 DIP SWITCH		S2 DIP SWITCH	
Opt. Timer Enabled	Actuator 7 off		Actuator 5 off	
Opt. Timer Disabled	Actuator 7 off		Actuator 5 on	
Exercise without Load	Actuator 8 off			
Exercise with Load	Actuator 8 on			

Shaded DIP switches are standard factory settings.

How to Set Optional Programmable Engine Exerciser (part of Acc. 11BG module)

⚠ DANGER

Hazardous voltage capable of causing shock, burns, or death is used in this transfer switch. Deenergize both Normal & Emergency power sources before programming the exerciser.

Navigating the Menu

Use the UP and DOWN arrow keys to move through the displays.

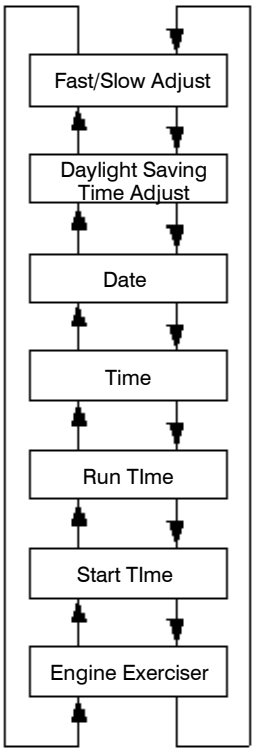

Changing the Parameters

Use the UP and DOWN arrow keys to move though the displays to the parameter to be changed. Push the ENTER key to start the editing process. The first parameter will flash. Use the UP and DOWN arrow keys to adjust the parameter to the desired value and press the ENTER key to save the value. The next parameter will now flash. Repeat the process until each parameter is properly configured.

Engine Exerciser Display

The Engine Exerciser Display shows the status of the engine exerciser. When the unit is shipped from the factory the programmable engine exerciser is "Disabled" and must be set to "Enabled" by the customer. When the engine exerciser is running, this display will count down the remaining time until the end of the exercise period.

Start Time Display

The Start Time Display shows the engine exerciser start time. There are four parameters that determine the start time:

weekly ("Every") or bi–weekly ("Alt") operation
day of week ("Sun" through "Sat")
start hour (0 through 23)
start minutes (0 through 59)

For example, if the user wants the exerciser to run every other Saturday at 3 PM, the proper configuration would be:

"Alt Sat @ 15:00"

NOTE: When choosing bi–weekly operation, the exerciser will always run on the week designated "(1)" on the date display.

Run Time Display

The Run Time Display shows the run time for the engine exerciser. The default setting from the factory is 30 minutes.

Time Display

The Time Display shows the present system time. The format is "hours:minutes:seconds".

NOTE: During total power outages, power to the accessory is maintained by a battery in the Controller (see page 4–2). Be sure that the 9–volt alkaline battery is fresh and enabled (jumper in ON position) so that the time and date settings are not lost.

Date Display

The Date Display shows the present system date. The format is "day of week (week) month/day of month/year".

NOTE: Week is either week 1 or week 2. This is used in conjunction with the bi–weekly timer.

Daylight Savings Time Adjust Display

This display shows whether the automatic daylight saving time adjustment is active. The factory default is "NO". If enabled, the unit will automatically adjust for daylight saving time at 2 AM on the first Sunday of April and the last Sunday of October.

Fast / Slow Adjust Display

This display shows the automatic fast/slow adjustment value. The factory default is 0. This feature can be used to trim a clock that runs fast or slow. For example, if your clock runs 10 seconds slow per week, change the fast/slow adjust value to "+10" and the unit will automatically add 10 seconds to the clock every week.

NOTE: Adjustments are made Sunday morning at 2 AM. If you want your exerciser period to start at 2 AM on Sunday, you cannot use this feature and the adjustment must be set to 0.

Programmable Engine Exerciser Settings

Fill in your settings for future reference

Weekly or Bi–weekly	Day of Week	Start Time	Run Time
Every = weekly *Alt* = bi–weekly	*Sun* through *Sat*	*0* – *23* hour *0* – *59* minute	*0* – *23* hour *0* – *59* minute *30* minutes is the default setting

Date exerciser was set _____

CONTROL FEATURES *(continued)*

INPHASE MONITOR FOR MOTOR LOAD TRANSFER

Inphase monitoring logic controls transfer and retransfer of motor loads, so that inrush currents do not exceed normal starting currents. It avoids nuisance tripping of circuit breakers and mechanical damage to motor couplings.

The Motor Load Transfer feature is built into the controller. DIP switch S1 (actuator 5) activates this feature: right = ON, left = OFF.

FUNCTION	S1 DIP SWITCH	
enable	Actuator 5 on	
disable	Actuator 5 off	

☐ Shaded DIP switches are standard factory settings.

Note

If the Motor Load Transfer feature is enabled, it will be activated following the Load Disconnect Feature Delay Before Transfer delay.

LOAD DISCONNECT FEATURE

Connect external circuits to the terminals indicated on the Wiring Diagram provided with the ATS.

The double throw (Form C) contact is rated for 28 VDC or 120 VAC (5 amps resistive). The contact operates prior to a selectable 0, 3, 10, or 20 second delay before transfer of the Automatic Transfer Switch. The contact resets either immediately following transfer or after the same delay as set for pre–signal before transfer.

Time delay between the load disconnect control signal and initiation of transfer is set on the controller with DIP switch S2 (actuators 6, 7, 8) as shown below:

Delay Before Transfer

LD TDBT	S2 DIP SWITCH	
0 (disable)	Actuator 7 on Actuator 8 on	
3 seconds	Actuator 7 on Actuator 8 off	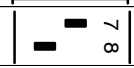
10 seconds	Actuator 7 off Actuator 8 on	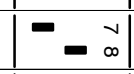
20 seconds	Actuator 7 off Actuator 8 off	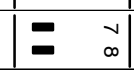

☐ Shaded DIP switches are standard factory settings.

Delay After Transfer*

LD TDAT	S2 DIP SWITCH	
enable	Actuator 6 on	
disable	Actuator 6 off	

*Enabling the Delay After Transfer will cause the control signal to reset after the same delay as set for the Delay Before Transfer.

REMOTE CONTROL FEATURES

These remote control features require a customer–supplied normally closed contact suitable for a 5 V dc low energy circuit. Refer to the Wiring Diagram provided with the ATS. Activate appropriate DIP switch S2 actuators below.

Remote Test (terminals CP6–7)

RTSW	S2 DIP SWITCH	
disable	Actuator 3 on	
enable	Actuator 3 off	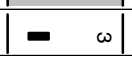

Remote Transfer to Emergency (CP8–9)

RT /E	S2 DIP SWITCH	
disable	Actuator 2 on	
enable	Actuator 2 off	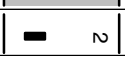

Bypass Transfer Time Delay (CP12–13)

TD E/N BYP.	S2 DIP SWITCH	
disable	Actuator 1 on	
enable	Actuator 1 off	

Inhibit Transfer to Emergency (CP10–11)

N/E INHIB.	S2 DIP SWITCH	
disable	Actuator 4 on	
enable	Actuator 4 off	

OPTIONAL STRIP HEATER (Accessory 44)

Accessory 44 Strip Heater is designed to keep ambient temperatures within the Automatic Transfer Switch enclosure at acceptable levels. This accessory consists of a mounting bracket with strip heater, thermostat, and terminal block. A transformer with fuses is included when the power for the assembly is derived from voltages above 120 V ac. The 120 V ac customer powered assembly does not include a transformer. This optional accessory is available factory installed or in kit form.

Turn the thermostat's dial to required setting as shown.

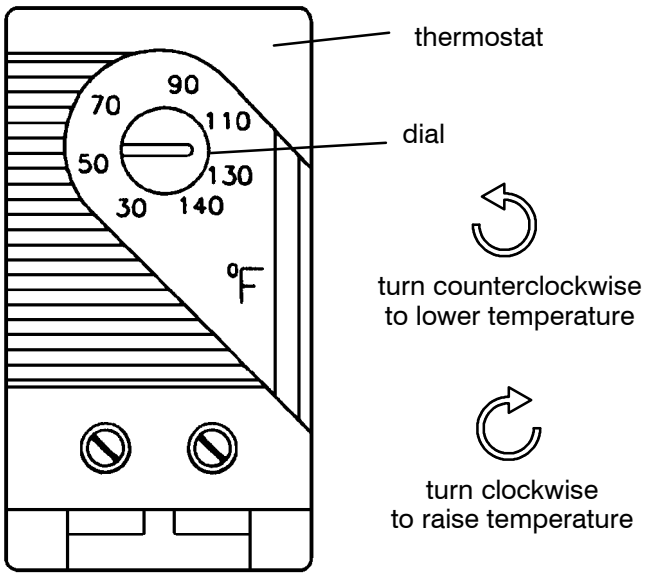

Figure 5–4. Thermostat.

AVAILABLE KITS FROM ASCO

Controls

Description	Accessory	Kit
Programmable Engine Exerciser & Source Availability Contacts	11BG	K629830
Serial Communication Module	72A	K601110

Strip Heater – Accessory 44

Description	Accessory	Kit
120 volt customer supplied voltage (without transformer)	44A	K613127–001
208 – 480 volt ATS derived voltage (with transformer)	44G	K613127–002
380 volt ATS derived voltage (with transformer)	44G	K613127
550 – 600 volt ATS derived voltage (with transformer)	44G	K613127–003

INDEX

A

accessories, *see* optional accessories

auxiliary circuits, 1–1

B

battery, 4–2, 5–1

buttons, push, 3–1

bypass time delay, 1–5, 2–1, 3–1

C

cable
  lugs, 1–1
  preparation, 1–1

catalog number, inside cover

cleaning, 3–1

connections
  engine control contact, 1–2
  line, 1–1

contacts
  auxiliary, 1–2
  engine control, 1–2
  main, 3–1
  source availability signal, 5–2

control features, 5–1
  load disconnect, 5–5
  motor load transfer, 5–5 (optional Accessory)
  plant exerciser, 5–1, 5–2, 5–3, 5–4

controller, 4–1, 4–2
  codes, cover
  cover removal, 4–2
  disconnecting, 3–1
  time delay potentiometers, 4–2

D

DIP Switches, 4–1, 4–2, 5–1, 5–2, 5–5

E

electrical operation, 1–5

engine exerciser, 5–1, 5–2, 5–3, 5–4

engine starting contacts, 1–2

F

features, *see* control features

frequency, pickup & dropout settings, 4–1

functional test, 1–3, 1–4, 1–5

G

ground, controller, 1–1

H

harness, 1–1
  disconnect plugs, 3–1

help, service 3–2

I

inphase monitor, 5–5 (optional Accessory)

inspection, 3–1

installation, 1–1

L

labels,
  engine starting contacts, 1–2
  inputs / outputs, 1–2
  rating, cover

lights, 1–4, 1–5, 5–1

load disconnect feature, 5–5 (optional Accessory)

lubrication, 3–1

M

maintenance, preventive, 3–1

manual load transfer, 3–2
  warning, 3–2

manual operation, 1–3
  illustration of, 1–3
  warning, 1–3

motor load transfer feature, 5–5

N

nameplate, inside cover

O

operation
  electrical, 1–5
  manual, 1–3
    illustration & warning, 1–3
  sequence of, 2–1

optional accessories
  programmable engine exerciser & source availability signal contacts, 5–2, 5–3, 5–4
  serial communication module, 5–6
  strip heater, 5–6

P

parts, 3–1

problem, 3–2

programmable engine exerciser, 5–2, 5–3, 5–4

R

rating label, cover

remote control features, 5–5
  bypass transfer time delay, 5–5
  inhibit transfer to emergency, 5–5
  remote test, 5–5
  remote transfer to emergency, 5–5

replacement parts, 3–1

S

service, call 800–800–2726 (ASCO)

set engine exerciser, 5–1, 5–2, 5–3, 5–4

settings
  changing, 4–1
  factory, 4–1
  frequency, 4–1
  phase, 4–1
  time delay, 4–1
  voltage, 4–1

service 3–2

T

test, functional, 1–3, 1–4, 1–5

time delay
  adjustment, 4–1
  gen–set cooldown, 4–1
  how to change, 4–2
  override momentary outages, 4–1
  settings, 4–1
  transfer to emergency, 4–1
  transfer to normal, 4–1

timer (plant exerciser), how to set, 5–1, 5–2, 5–3, 5–4

transfer switch test, 1–5, 3–1

trouble–shooting, 3–2

V

voltage, phase, 4–1

voltage, pickup and dropout settings, 4–1

Printed in USA

© ASCO Power Technologies, L.P. 2004

Operator's Manual

ASCO® Series 300 Automatic Transfer Switches E design, 260 and 400 amp. sizes

⚠ DANGER

DANGER is used in this manual to warn of high voltages capable of causing shock, burns, or death.

⚠ WARNING

WARNING is used in this manual to warn of possible personal injury.

⚠ CAUTION

CAUTION is used in this manual to warn of possible equipment damage.

An experienced licensed electrician must install the ATS.



260 & 400 amp sizes

Refer to the outline and wiring drawings provided with your ASCO Series 300 ATS for all installation details.

ASCO Series 300 Automatic Transfer Switches (ATSs) are Listed under Underwriters Laboratories UL 1008 Standard for Safety for Automatic Transfer Switches. ASCO Series 300s are also Listed under CSA C22.2 No. 178 Standard for Automatic Transfer Switches. All control features are UL Component Recognized, which assures that ASCO automatic transfer switches meet OSHA Safety Requirements and will be acceptable to electrical inspectors.

ASCO Series 300 Automatic Transfer Switches are suitable for emergency and standby system applications. They meet emergency system rating requirements as defined in National Electrical Code (NEC) Article 700 and UL 1008. Also, they are suitable for the requirements of NEC Article 517 – Health Care Facilities, NEC Article 701 – Legally Required Standby Systems, NEC Article 702 – Optional Standby Systems, NFPA 99 Health Care Facilities, and NFPA 110 Emergency and Standby Power Systems.

Rating Label

Each automatic transfer switch contains a rating label to define the loads and fault circuit withstand / closing ratings. Refer to the label on the transfer switch for specific values.

⚠ WARNING

Do not exceed the values on the rating label. Exceeding the rating can cause personal injury or serious equipment damage.

TABLE OF CONTENTS

	section
INSTALLATION	1
SEQUENCE OF OPERATION	2
TESTING & SERVICE	3
ADJUSTMENTS	4
CONTROL FEATURES	5
INDEX	back cover

ASCO POWER TECHNOLOGIES L.P. 50 Hanover Road, Florham Park, New Jersey 07932–1591 USA
telephone 1 800 937–2726 (ASCO), for service call 1 800 800–2726 (ASCO) www.asco.com

381333–067 E

ASCO POWER TECHNOLOGIES CANADA PO Box 1238, 17 Airport Road, Brantford, Ontario, Canada N3T 5T3
telephone 519 758–8450, fax 519 758–0876, for service call 1 888 234–2726 (ASCO) www.asco.ca

Nameplate and Catalog Number Identification

The Transfer Switch nameplate includes data for each specific ASCO Series 300 ATS. Use the ATS only within the limits shown on this nameplate. A typical Catalog Number is shown below with its elements explained.

The example is for a Series 300 ATS with switched neutral, 3 pole, 400 amp., 480 V, in a Type 1 enclosure:

E 300	C	3	400	N	1	C
transfer switch prefix letter	Neutral	Phase Poles	Amperes	Voltage	Controller	Enclosure

Neutral
- C – overlapping
- blank – solid

Phase Poles
- 2 – single Ø
- 3 – three Ø

Amperes
- 260
- 400

Voltage

A 115	K 415
B 120	L 440
C 208	M 460
D 220	N 480
E 230	P 550
F 240	Q 575
H 380	R 600
J 400	

Controller
- 1 – standard
- 1X – if accessories ordered

Enclosure
- C – type 1
- F – type 3R
- G – type 4
- L – type 12
- blank – open type

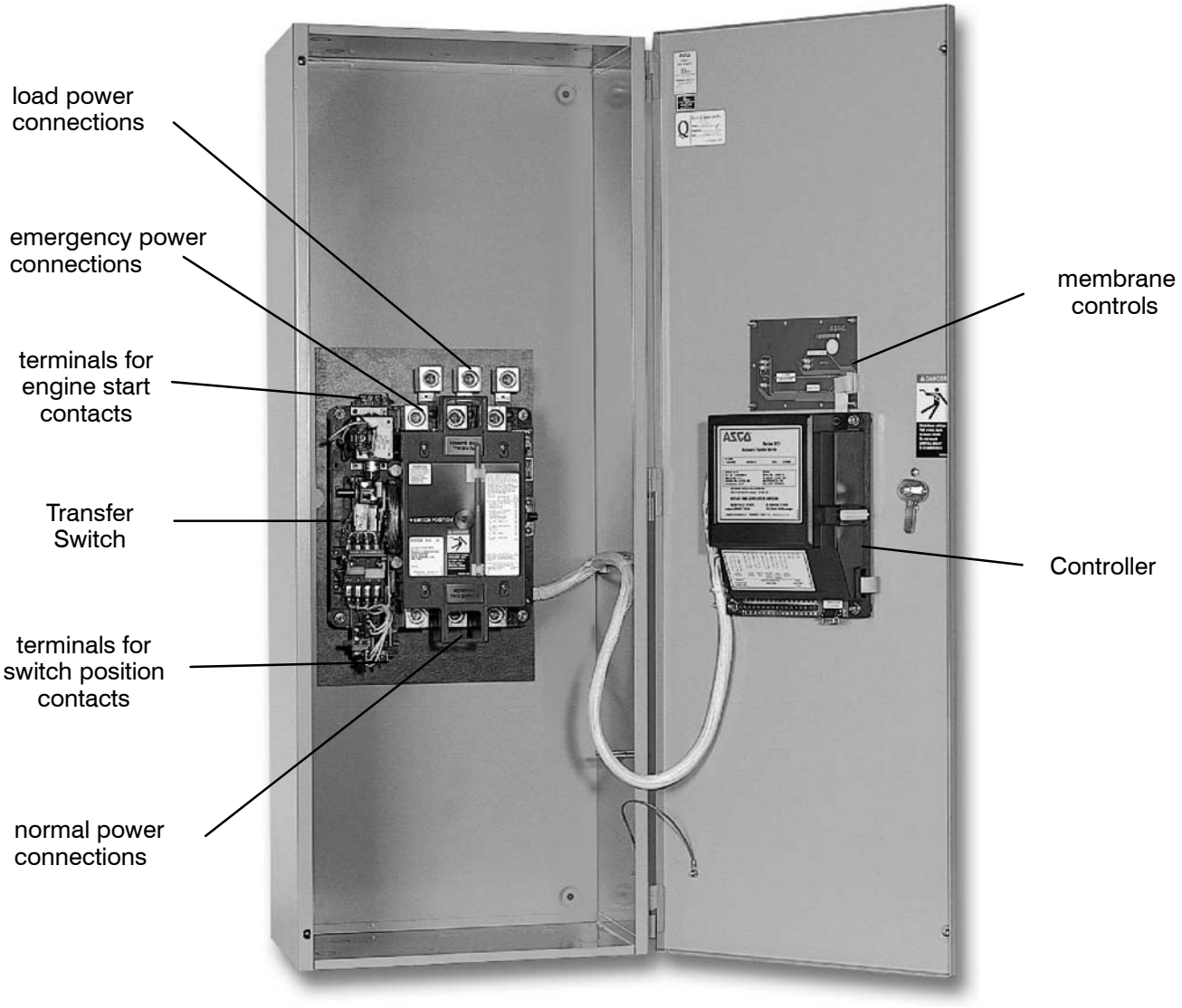

400 amp. size in typical enclosure with location of customer connections

SECTION 1 INSTALLATION

Series 300 Automatic Transfer Switches are factory wired and tested. Installation requires skid removal then securing the enclosure to the supporting foundation.

Supporting Foundation

The supporting foundation for the enclosure must be level and straight. Refer to the applicable enclosure outline drawing included with the Series 300 for all mounting details including door opening space.

If bottom cable entry is used, the foundation must be prepared so that the conduit stubs are located correctly. Refer to the enclosure outline drawing for specified area and location. Provide cable bending space and clearance to live metal parts. When a concrete floor is poured, use interlocking conduit spacer caps or a wood or metal template to maintain proper conduit alignment.

Mounting

Refer to the applicable enclosure outline drawing furnished with this switch and mount the Series 300 according to details and instructions shown on diagram.

⚠ CAUTION

Protect the switch from construction grit and metal chips to prevent malfunction or shortened life of the automatic switch switch.

Mount the ASCO ATS vertically to a rigid supporting structure. Level all mounting points by using flat washers behind the holes to avoid distortion of the switch.

Transfer switches rated 260 and 400 amp. are mounted on an insulator backing piece (installed behind the transfer switch). If the transfer switch is removed from the cabinet and then reinstalled, this insulator piece must be placed behind the transfer switch. See Figure 1–1.

Line Connections

Refer to the Wiring Diagram provided with your Series 300 ATS. All wiring must be made in accordance with the National Electrical Code and local codes.

⚠ DANGER

De–energize the conductors before making any line or auxiliary circuitry connections. Be sure that Normal and Emergency line connections are in proper phase rotation. Place engine generator starting control in the OFF position. Make sure engine generator is not in operation.

It is not necessary to remove the barriers from the transfer switches to install cables.

⚠ WARNING

Be sure that the insulator piece is behind 260 and 400 ampere transfer switches.

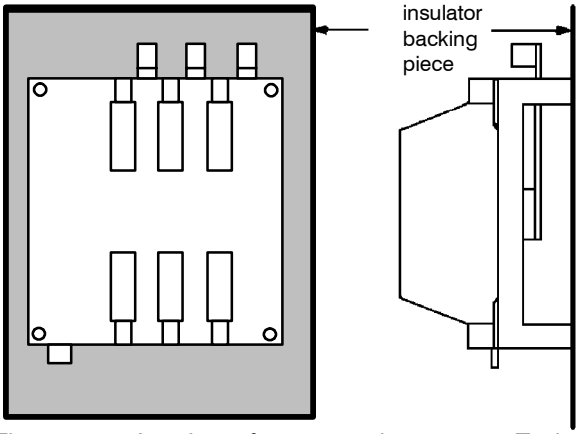

Figure 1-1. Insulator for 260 and 400 amp. E–design transfer switches.

The controller is mounted on the cabinet door. An add-on DIN rail is provided for some optional accessories and is mounted below the controller on the door.

Testing Power Conductors

Do not connect the power conductors to the ASCO Series 300 transfer switch until they are tested. Installing power cables in conduit, cable troughs and ceiling-suspended hangers often requires considerable force. The pulling of cables can damage insulation and stretch or break the conductor's strands. For this reason, after the cables are pulled into position, and before they are connected, they should be tested to verify that they are not defective or have been damaged during installation.

Connecting Power Conductors

After the power cables have been tested, connect them to the appropriate terminal lugs on the transfer switch as shown on the wiring diagram provided with this Series 300. Make sure the lugs provided are suitable for use with the cables being installed. Standard terminal lugs are solderless screw type and will accept the wire sizes listed on the drawings provided with the Series 300. Be careful when stripping insulation from the cables; avoid nicking or ringing the conductor. Remove surface oxides from cables by cleaning with a wire brush. When aluminum cable is used, apply joint compound to conductors. Tighten cable lugs to the torque specified on rating label.

Do not run cables behind the switch. Cables can be bundled on the right side of the switch. Maintain proper electrical clearance between the live metal parts and grounded metal: ½ inch minimum.

Engine Starting Contacts

The engine control contact connections are located on the transfer switch. Connect signal wires to appropriate terminals as specified in Table A, shown in Figure 1–2.

Table A. Engine start connections.

When normal source fails	Terminals on transfer switch
contact closes	TB14 and TB15
contact opens	TB14 and TB16

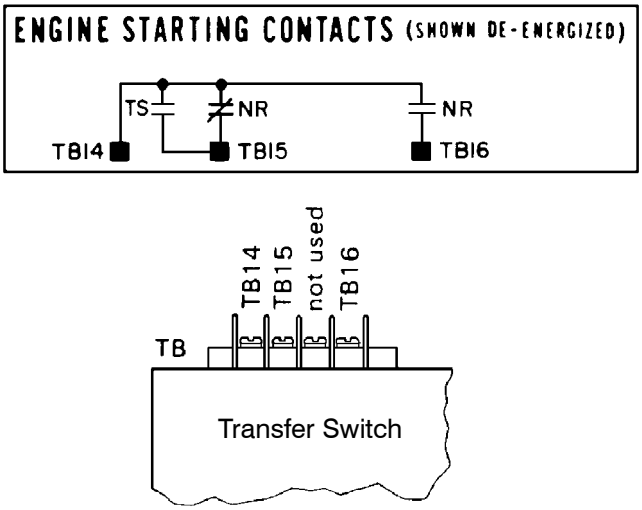

Figure 1-2. Engine starting contact label and location for 260 and 400 amp. E–design transfer switches.

Controller Ground

A grounding wire must be connected to the controller's lower left mounting stud. Because the controller is mounted on the enclosure door, a conductive strap must be used between the enclosure and the door. This connection provides proper grounding which does not rely upon the door hinges.

Harnesses

The transfer switch is connected to the left side of the controller by a plug–in harness (two plugs).

Auxiliary Circuits

Connect auxiliary circuit wires to appropriate terminals on transfer switch. Note the control features that are furnished on this switch. Make the necessary auxiliary connections by referring to **Section 5, Control Features**.

Connections to Controller for other Control Features (located on bottom of Controller):

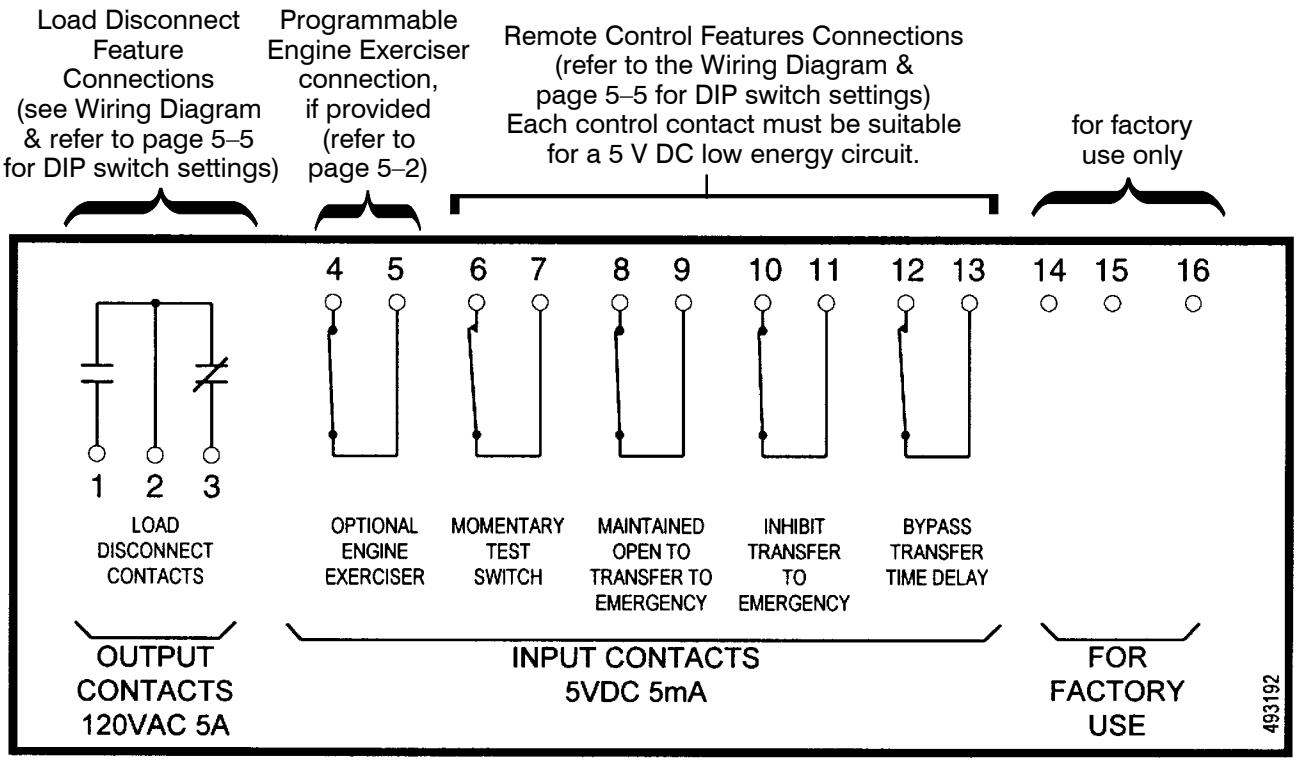

Figure 1-3. Input / output label on the Controller showing possible connections to the lower terminal block.

Functional Test

The Functional Test consists of three checks: manual operation, voltage checks, and electrical operation.

⚠ CAUTION

Do these checks in the order presented to avoid damaging the automatic transfer switch.

Read all instructions on the Wiring Diagram and labels affixed to the automatic transfer switch. Note the control features that are provided and review their operation before proceeding.

1 – Manual Operation Test

A detachable manual operator handle is provided on the Transfer Switch for maintenance purposes only. Manual operation of the transfer switch should be checked before it is energized (operated electrically).

⚠ WARNING

Do not manually operate the transfer switch until both power sources are disconnected: open both circuit breakers.

1. Insert the maintenance handle into the hole in the shaft, left side of the operator.
2. Move the maintenance handle as shown to manually operate the transfer switch. The switch should operate smoothly without any binding. If it does not, check for shipping damage or construction debris.
3. Return the transfer switch to the *N* (normal) position.
4. Remove the maintenance handle and store it on the transfer switch in the place provided.

⚠ WARNING

Verify that the maintenance handle has been removed before proceeding!

Now continue to **2 – Voltage Checks** on next page.

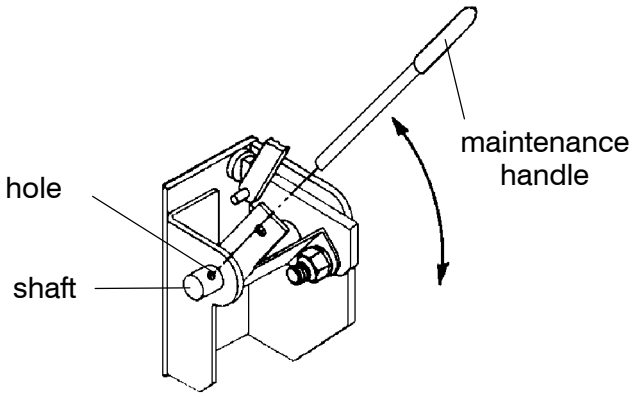

Figure 1-4. Removable maintenance handle on 260 and 400 amp. E–design transfer switches.

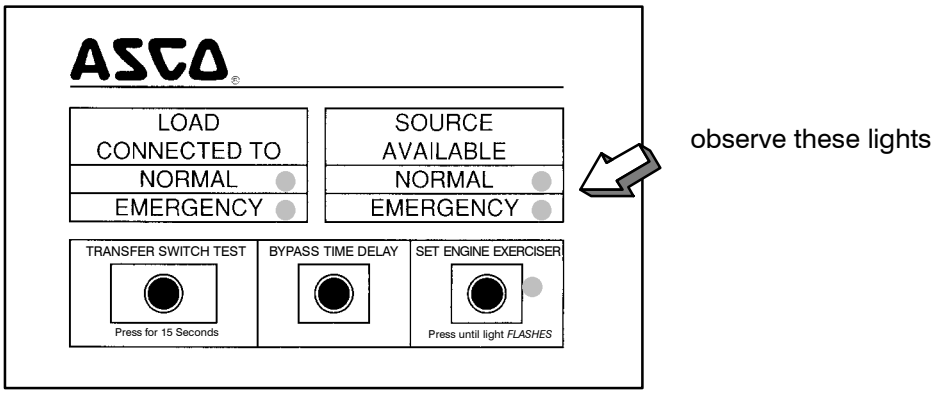

Figure 1–5. Standard controls and indicators.

2 – Voltage Checks

First check nameplate on transfer switch; rated voltage must be the same as normal and emergency line voltages.

⚠ CAUTION

Verify that the feeders have been connected to the proper lugs.

⚠ DANGER

Use extreme caution when using a meter to measure voltages in the following steps. Do not touch power terminals; shock, burns, or death could result !

Perform steps 1 through 6 at the right. Observe the status lights. See Figure 1–5.

- ● Black circle means light is on.
- ❍ White circle means light is off.

* If necessary, adjust voltage regulator on the generator according to the manufacturer's recommendations. The Automatic Transfer Switch will respond only to the rated voltage specified on the Transfer Switch nameplate.

1	Close the normal source circuit breaker. The *Transfer Switch Connected To Normal* and the *Normal Source Available* lights should come on.	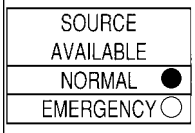
2	Use an accurate voltmeter to check phase to phase and phase to neutral voltages present at the transfer switch normal source terminals.	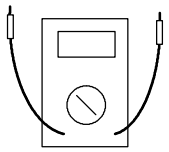
3	Close the emergency source circuit breaker. (Start generator, if necessary.) The *Transfer Switch Connected To Normal* and the *Emergency Source Available* lights should come on.	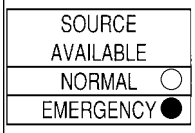
4	Use an accurate voltmeter to check phase to phase and phase to neutral voltages present at the transfer switch emergency source terminals.*	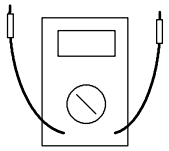
5	Use a phase rotation meter to check phase rotation of emergency source; it must be the same as the normal source.	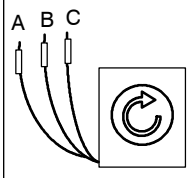
6	Shut down the engine–generator, if applicable. The *Emergency Source Accepted* light should go off. Then put the starting control selector switch (on the generator set) in the *automatic* position. Close enclosure door.	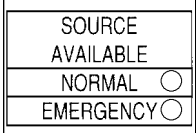

Now continue to **3 – Electrical Operation** on next page.

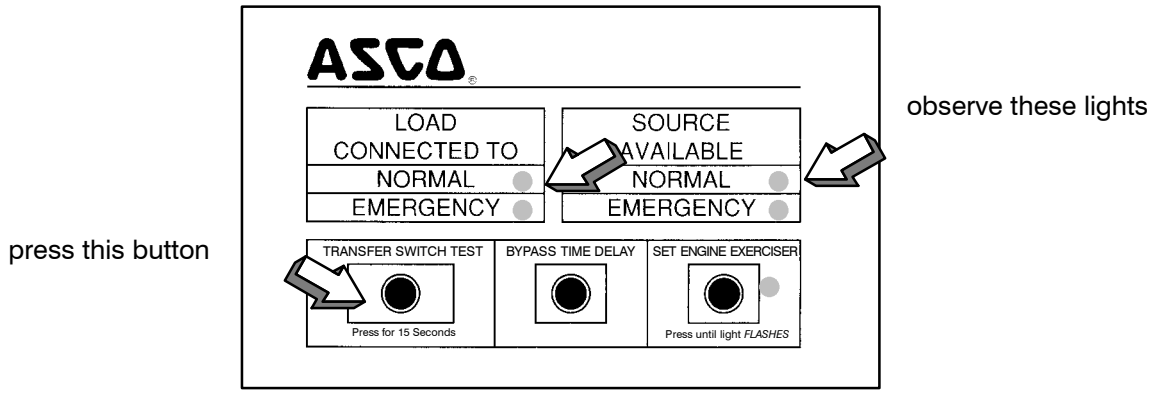

Figure 1–6. Standard controls and indicators.

3 – Electrical Operation

First check nameplate on transfer switch; rated voltage must be the same as normal and emergency line voltages.

⚠ CAUTION

Verify that the feeders have been connected to the proper lugs.

⚠ DANGER

Use extreme caution when using a meter to measure voltages in the following steps. Do not touch power terminals; shock, burns, or death could result !

Perform steps 1 through 8 at the right. Observe the status lights. See Figure 1–6.

- ● Black circle means light is on.
- ❍ White circle means light is off.

NOTE: If Motor Load Transfer feature is activated, then transfer may not occur immediately after the respective time delays. Transfer will only occur when the phase relationship between sources is correct.

This completes the Functional Test of the ASCO Series 300 Automatic Transfer Switch. Leave the engine–generator starting control in the *automatic* position.

1	The normal source must be available and the generator must be ready to start. Check that the *Normal Source Available* light is on.	SOURCE AVAILABLE NORMAL ● EMERGENCY ○
2	Press and hold the *Transfer Switch Test* button until the engine starts and runs. This should happen within 15 sec.	TRANSFER SWITCH TEST
3	The *Emergency Source Available* light should come on.	SOURCE AVAILABLE NORMAL ● EMERGENCY ●
4	The transfer switch should transfer to the Emergency position. The *Load Connected to Emergency* light should come on and the *Load Connected to Normal* light should go off.	LOAD CONNECTED TO NORMAL ○ EMERGENCY ●
5	If the *transfer to emergency delay* is used the transfer should occurs after a time delay (up to 5 minutes). For immediate transfer press the *Bypass Time Delay* button.	BYPASS TIME DELAY
6	The transfer switch should transfer back to the Normal position. The *Load Connected to Normal* light should come on and the *Load Connected to Emergency* light should go off.	LOAD CONNECTED TO NORMAL ● EMERGENCY ○
7	If the *retransfer to normal delay* is used the retransfer should occur after a time delay (up to 30 minutes). For immediate retransfer press the *Bypass Time Delay* button.	BYPASS TIME DELAY
8	The *unloaded running delay* keeps the generator running for 5 minutes (cool–down period). Then the generator should stop and the *Emergency Source Available* light should go off.	SOURCE AVAILABLE NORMAL ● EMERGENCY ○

SECTION 2 SEQUENCE OF OPERATION

Transfer To Emergency

The sequence for load transfer to emergency source begins automatically when normal source voltage falls below the preset dropout point or when *Transfer Switch Test* button is pressed. An under voltage condition on any phase of the normal source is detected by the sensor.

When the normal source voltage fails or the *Transfer Switch Test* button is pressed, the SE relay de-energizes and relay NR begins its timing cycle (1 or 3 seconds, *momentary normal source outage delay*). The NR relay is provided with a time delay on dropout to override momentary outages and prevent nuisance starting of the engine-driven generator. If the normal source voltage returns above the sensor dropout setting before the time delay expires, the NR relay timing cycle is reset to zero and relay SE energizes.

If the normal source voltage does not return above the sensor dropout setting before the time delay expires, the NR relay de-energizes and signals the engine-driven generator to start. At the same time, a voltage and frequency sensor begins monitoring the emergency source. The sensor will accept the emergency source only when both voltage and frequency reach preset pickup points. Usually about ten seconds elapse from dropout of the NR relay to acceptance by the sensor. This time span occurs because the engine-driven generator must crank, start, and run up to nominal pickup points. For this reason, if the *Transfer Switch Test* button is pressed it must be held for 15 seconds. If the emergency source is available immediately, the sensor may accept it as soon as NR relay drops out.

When the emergency source is accepted by the sensor, relay ER begins its timing cycle (*transfer to emergency delay*). ER relay is provided with an adjustable (0 to 5 minutes) time delay on pickup to delay transfer of the load to the emergency source. For immediate transfer press *Bypass Time Delay* button.

ER relay energizes, the TS coil is energized, the transfer switch operates, and all switch contacts (mains, controls, auxiliaries) reverse position. The transfer switch is now supplying the load from the emergency source.

The transfer switch will remain in the Emergency position until the normal source is restored. If the *Transfer Switch Test* button is used, the transfer switch will remain on emergency until the *retransfer to normal delay* times out.

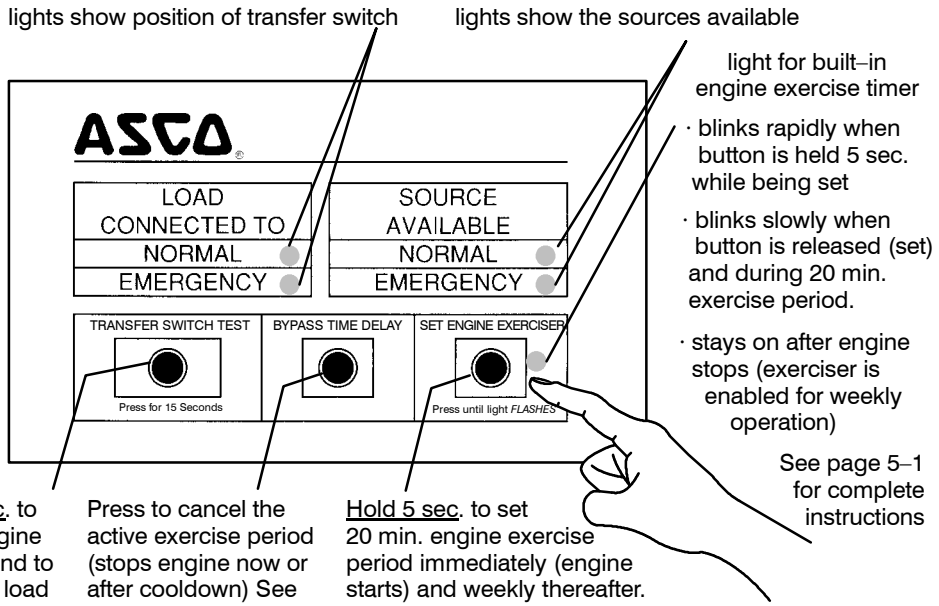

Figure 2–1. Membrane controls and indicator lights.

Retransfer to Normal

The sequence for load retransfer to the normal source automatically begins when the voltage sensor detects restoration of the normal source. The voltage level must rise above the preset pickup point on all phases before the sensor will accept the normal source.

When the normal source is accepted by the sensor, relay SE begins its timing cycle (adjustable 1 sec. to 30 min., *retransfer to normal delay*). For immediate retransfer press *Bypass Time Delay* button. SE relay is provided with a time delay on pickup to prevent immediate load retransfer to the normal source. The delay insures that the normal source has stabilized before reconnection of vital loads. If the normal source voltage falls below the present dropout point before the time delay expires, the timing cycle is reset to zero. If the emergency source fails for more than 4 seconds during the timing cycle, ER relay drops out and the load is immediately retransferred to the normal source, if that source is acceptable.

SE relay energizes and ER relay is dropped out. The TS coil is energized, the transfer switch operates, and all switch contacts (mains, controls, auxiliaries) reverse position. The transfer switch is now supplying the load from the normal source again.

Upon retransfer to the normal source, NR relay begins its timing cycle (*unloaded running delay [engine cooldown]*). NR relay is provided with a 5 minute time delay on pickup to keep the engine running for a cool-down period.

NR relay energizes after the time delay and signals the engine-driven generator to shut down. All circuits are reset for any future normal source failure.

Activation of standard control features shown in Section 5 will alter the sequence of operation and introduce additional time delays during transfer operations.

Katolight Service - Master Repair Manual - Page 3786

SECTION 3 TESTING & SERVICE

PREVENTIVE MAINTENANCE

Reasonable care in preventive maintenance will ensure high reliability and long life for the automatic transfer switch.

Operate the switch at least once a month. Perform this 4–step Electrical Operation Test (test with load transfer).

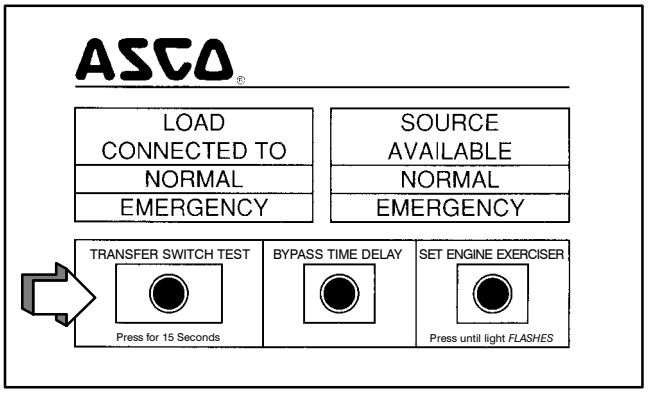

Transfer Switch Test

1.	Press and hold the door-mounted *TRANSFER SWITCH TEST* button until the engine starts and runs. This should happen within 15 seconds.
2.	The transfer switch will operate to the Emergency position. If the *Transfer To Emergency Delay* is used, the transfer will occur after a time delay (up to 5 minutes). For immediate transfer press *BYPASS TIME DELAY* button.
3.	The Transfer Switch will operate back to the Normal position after the *Retransfer To Normal Delay* (up to 30 minutes). For immediate retransfer press *BYPASS TIME DELAY* button.
4.	*Unloaded Running (Engine Cooldown) Delay* allows engine to run unloaded for 5 minutes.

Checklist for Yearly Inspection

☐ **Clean the enclosure.** De–energize all sources, then brush and vacuum away any excessive dust accumulation. Remove any moisture with a clean cloth.

☐ **Check the transfer switch contacts**. Remove the transfer switch barriers and check contact condition. Replace the contacts if they become pitted or worn excessively. Reinstall the barriers carefully.

☐ **Maintain transfer switch lubrication**. The transfer switch has been properly lubricated, and under normal operating conditions no further lubricating is required. Renew factory lubrication if the switch is subjected to severe dust or abnormal operating conditions. Relubricate the operator if TS coil is replaced. Order **lubrication 625550–001** (Castrol *Endurex*® 4000 lubricant).

☐ **Check all cable connections & retighten them**. Torque to values shown on transfer switch label.

DISCONNECTING THE CONTROLLER

The harness disconnect plugs are furnished for repair purposes only and should not have to be unplugged. If the controller must be isolated, follow these steps carefully.

Disconnecting the Plugs

⚠ WARNING

Do not unplug the controller until step 1a. or 1b. below is completed.

1. Observe the position of the transfer switch.
   a. If the transfer switch is in the *Normal* position, place standby engine starting control in the *off* position. Then open the emergency source circuit breaker.
   b. If the transfer switch is in the *Emergency* position, open the normal source circuit breaker. Place the engine starting control in the *test* or *run* position.
2. Separate the quick disconnect plugs by squeezing the latches. Do not pull on the harness wires.
3. Label, remove, and tape the signal wires connected to the engine start terminals on the transfer switch: TB14 and TB15, or TB14 and TB16.

Reconnecting the Plugs

⚠ WARNING

Do not reconnect the controller until step 1a. or 1b. and 2 below are completed.

1. Observe the position of the transfer switch.
   a. If the transfer switch is in the *Normal* position, be sure that the standby engine starting control is still in the *off* position. The emergency source circuit breaker still should be open.
   b. If the transfer switch is in the *Emergency* position, normal source circuit breaker still should be open.
2. Reconnect the signal wires connected to the appropriate engine start terminals on the transfer switch. See **Section 1**, *Engine Starting Contacts*.
3. The harness plugs and sockets are keyed. Carefully align the plugs with the sockets and press straight in until both latches click.
4. Restore the opposite source as follows:
   a. If the transfer switch is in the *Normal* position, place the standby engine starting control in the *automatic* position. Then close the emergency source circuit breaker.
   b. If the transfer switch is in the *Emergency* position, close the normal source circuit breaker. The load will be automatically retransferred to the normal source after the *Retransfer to Normal Delay*. For immediate retransfer, press *BYPASS TIME DELAY* button. Place the engine starting control in the *automatic* position.

MANUAL LOAD TRANSFER

This procedure will manually transfer the load if the controller is disconnected.

⚠ WARNING

Do not manually operate the transfer switch until both power sources are disconnected: open both circuit breakers.

1. Open normal and emergency source circuit breakers.
2. Use the maintenance handle to manually operate transfer switch to the opposite source. See page 1–3, *Manual Operation Test*.
3. If the transfer switch is in the Emergency position manually start the engine generator and then close the emergency source circuit breaker.

TROUBLE-SHOOTING

Note the control features that are activated or furnished on the switch and review their operation. Refer to **Section 5**, **Control Features**.

⚠ WARNING

Proceed with care!
The automatic transfer switch is energized.

Table 3-1. Trouble-Shooting Checks.

PROBLEM	CHECK IN NUMERICAL SEQUENCE		
	1 OPERATION	2 GEN-SET	3 VOLTAGE
Gen-Set does not start when the *TRANSFER SWITCH TEST* button is pressed and held for 15 seconds or when the normal source fails.	Hold the *TRANSFER SWITCH TEST* button 15 sec. or the outage must be long enough to allow for the 1 or 3 sec. *Momentary Normal Source Outage Delay* plus engine cranking and starting time.	Starting control must be in automatic position. Batteries must be charged and connected. Check wiring to engine starting contacts.	—
Transfer switch does not transfer the load to emergency source after the gen-set starts.	Wait for *Transfer to Emergency Delay* (0 to 5 min.) to time out. For immediate transfer, press the *BYPASS TIME DELAY* button. If Motor Load Transfer is active, wait for in-phase condition (see below).	Generator output circuit breaker must be closed. Generator frequency must be at least 57 Hz.	Voltmeter should read at least 90% of nominal phase to phase voltage between transfer switch terminals EA and EC (or EL1 and EL2 for 2 pole switches). * * These are factory settings.
Transfer switch does not transfer the load to normal source when normal returns or when *TRANSFER SWITCH TEST* button is released.	Wait for *Retransfer to Normal Delay* (1 sec. to 30 min.) to time out. For immediate re–transfer, press *BYPASS TIME DELAY* button. If Motor Load Transfer is active, wait for in-phase condition (see below).	—	Voltmeter should read at least 90% of nominal phase to phase voltage between transfer switch terminals NB and NC, NC and NA, and NA and NB (or NL1 and NL2 for 2 pole switches).
Gen-Set does not stop after load retransfer to the normal source.	Wait for the 5 minute *Unloaded Running Delay* to time out.	Starting control must be in automatic position.	—

Trouble-Shooting the Motor Load Transfer Feature (refer to page 5–5)

⚠ DANGER

Use extreme caution when using a meter to measure voltages in the following steps. Do not touch power terminals; shock, burns, or death could result !

1. Connect a voltmeter (set for twice system phase–to–phase voltage) between Transfer Switch terminals NA and EA.
2. Manually start generator. Voltmeter needle should sweep back and forth at a regular rate between 0 and about twice system voltage.
3. Press and hold TRANSFER SWITCH TEST button. The load should transfer to emergency source when meter needle is near 0 volts. If transfer does not occur, Motor Load Transfer feature is not operating.
4. Release the **Transfer Switch Test** button. The load should retransfer back to the normal source after the *Retransfer to Normal Delay*, if used. The retransfer should occur when the needle is near 0 volts. If retransfer does not occur after the time delay, the Motor Load Transfer feature is not operating.
5. For immediate retransfer, press the BYPASS TIME DELAY button. Then disconnect the voltmeter.

HELP If the problem is isolated to circuits on the controller or the transfer switch, call your local ASCO Power Technologies sales office or ASI. In the United States, call 1–800–800–2726. In Canada, call 1–888–234–2726. Please furnish the Serial No., Bill of Material (BOM) No., and Catalog No. from transfer switch nameplate.

SECTION 4 ADJUSTMENTS

Time Delay Adjustment

Standard time delays are set to customer specifications (if none specified, standard factory settings are used).

To change a setting, follow procedure on page 4-2. Use Table 4-1 as a guide to time delay values and their corresponding adjustment DIP switch or potentiometer.

Table 4-1. Time Delay Settings

DESCRIPTION	LABELS	FACTORY SETTING	ADJUSTMENT RANGE	S3 DIP SWITCH		ADJUSTMENT POTENTIOMETER
Override Momentary Normal Source Outages	TD ES	3 seconds	1 second	Actuator 1 on		—
			3 seconds	Actuator 1 off		
Transfer to Emergency	TIMER N/E	0 minutes (full ccw)	0 to 5 minutes	—	—	P2
Override Momentary Emergency S. Outages	—	4 seconds	non-adjustable	—	—	—
Retransfer to Normal	TIMER E/N	30 minutes (full cw)	1 second to 30 minutes	—	—	P1
Unloaded Running (Engine Cooldown)	—	5 minutes	non-adjustable	—	—	—

Sensor Adjustments

Voltage and frequency sensor pickup and dropout points are set to customer specifications (if none specified, standard factory settings are used). To change a setting, follow procedure on page 4–2. Use Tables 4-2 and 4–3 for settings and corresponding DIP switch actuators.

⚠ WARNING

Any change in these settings may affect the normal operation of the automatic transfer switch. This change could allow the load circuits to remain connected to a low voltage source.

Table 4-2. Voltage and Frequency Settings. (☐ Shaded DIP switches are standard factory settings).

DESCRIPTION	LABELS	SETTING	% of nominal		S1 DIP SWITCH	
			FACT. SET	ADJ RANGE		
Normal Source Voltage	PU / N	Pickup	90 %	95 % *	Actuator 3 off	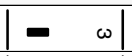
				90 %	Actuator 3 on	
	DO / N	Dropout	85 %	90 % *	Actuator 1 off Actuator 2 off	
				85 %	Actuator 1 on Actuator 2 off	
				80 %	Actuator 1 off Actuator 2 on	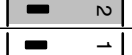
				70 %	Actuator 1 on Actuator 2 on	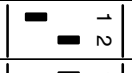
Emergency Source Voltage	– –	Pickup	90 %	non-adjustable	– –	
	– –	Dropout	75 %	non-adjustable		
Emergency Source Frequency	– –	Pickup	95 %	non-adjustable	– –	
	– –	Dropout	85 %	non-adjustable		
	60 / 50 Hz	60 / 50 Hz	60 Hz	60 Hz	Actuator 4 off	
				50 Hz	Actuator 4 on	
Voltage Phases	3 ∅ , 1 ∅	3 ∅ / 1 ∅	3 ∅	3 phase	Actuator 6 off	
				1 phase	Actuator 6 on	

* If dropout voltage is set to 90%, the pickup voltage must be set to 95%.

Table 4-3. Transformer Voltage Adjust.
(Low setting shifts all voltage settings down 4.2%; for example, 240 V to 230 V, or 480 V to 460 V)

DESCRIPTION	LABELS	FACTORY SETTING	ADJUSTMENT	S3 DIP SWITCH	
Voltage Adjust (4.2%)	LOW / HI	HI	LOW	Actuator 2 off	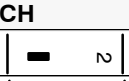
			HI	Actuator 2 on	

⚠ WARNING

Do not make any setting changes while the controller is energized.

How to Change a Setting

1. Prevent the transfer switch from operating by disconnecting one source first, then the other, as follows:
   a. If the transfer switch is in the Normal position, open the emergency source circuit breaker. Turn the engine starting control to *off*. Then open the normal source circuit breaker.
   b. If the transfer switch is in the Emergency position, open the normal source circuit breaker. Turn engine starting control to *test* or *run*. Then open the emergency source circuit breaker.
2. Disconnect both harness plugs from controller by squeezing the latches. Do not pull on the wires.
3. Remove cover from the controller by releasing latch on right side with your thumb. See Figure 4-1.
4. Locate the appropriate adjustment potentiometer or DIP switch for the setting that you want to change. Refer to Table 4-1 and Table 4–2 on page 4-1 and Figure 4-2, Figure 4–3, Figure 4–4 on page 4–2.
5. Use a small screwdriver to turn the potentiometer clockwise to increase the time delay or counterclockwise to decrease it. See Figure 4-3.
6. Use a ball-point pen (or similar pointed tool) to slide the switch actuators left or right so they match the illustration next to the setting (left = off, right = on). Recheck the setting. See Figure 4-4.
7. Install the cover on the controller by hooking it on the left side and latching the right side.
8. Reconnect both harness plugs to the controller by aligning and pressing straight in until latches click.

⚠ WARNING

Close the enclosure door.

9. Close the enclosure door, then restore both sources:
   a. If the transfer switch is in the Normal position first close the normal source circuit breaker, then close the emergency source circuit breaker.
   b. If the transfer switch is in the Emergency position, close the normal source circuit breaker. The load will be automatically retransferred to the normal source. Then close the emergency source circuit breaker.
10. Turn the engine starting control to *automatic*.

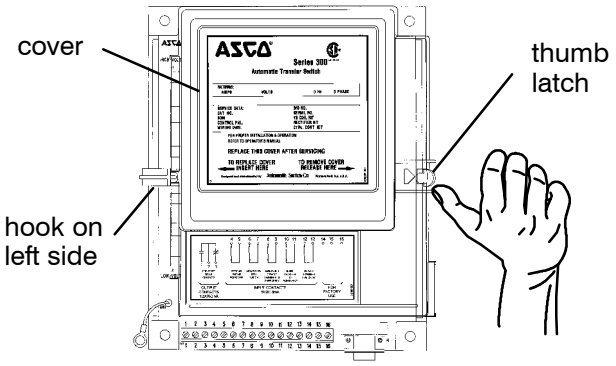

Figure 4-1. Controller cover latch.

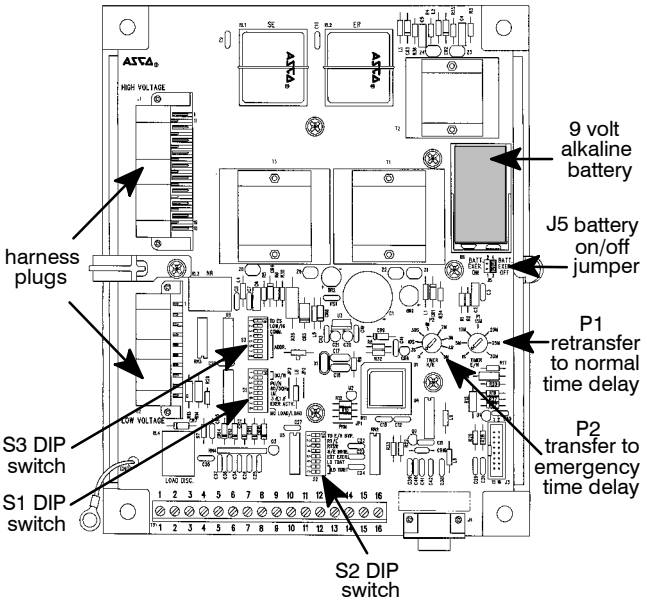

Figure 4-2. Location of potentiometers.

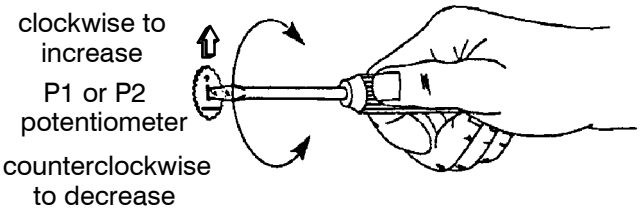

Figure 4-3. Changing time delay potentiometers.

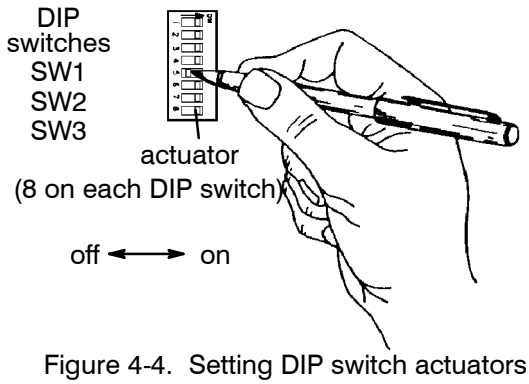

Figure 4-4. Setting DIP switch actuators.

SECTION 5 CONTROL FEATURES – ENGINE EXERCISERS

These timers periodically exercise the emergency engine-generator plant. They can be set to exercise with or without load transfer, or they can be completely disabled. The engine-generator should be exercised under load once a week for a minimum time period of 20 minutes, or follow the recommendations of the engine-generator set manufacturer. Refer to page 4–2 for location of DIP switches, battery (provided), and jumper block in the controller.

BUILT–IN ENGINE EXERCISER

The engine exerciser included in ASCO Series 300 Automatic Transfer Switches provides a once a week 20–minute exercise period. It occurs immediately when the SET ENGINE EXERCISER push button is pressed (and held for at least 5 seconds), and then at the same time weekly thereafter. A 9 volt alkaline battery (*Duracell*® MN1604, *Everready*® 522, or *Panasonic*® 6AM6) is furnished and installed in the controller to maintain the setting. The battery jumper block must be shifted to the ON position. See Figure 4–2 on page 4–2.

Fill in day and time set. Week Day _____ Time _____.

DIP Switch Settings

FUNCTION	S1 DIP SWITCH		S2 DIP SWITCH	
Std. Timer Enabled	Actuator 7 on	7	Actuator 5 on	5
Std. Timer Disabled	Actuator 7 off	7	Actuator 5 on	5
Exercise without Load	Actuator 8 off	8		
Exercise with Load	Actuator 8 on	8		

Shaded DIP switches are standard factory settings.

Press to cancel an active exercise period (stops generator).

If *Exercise with Load* is set, retransfers load to Normal, then stops generator after 5 min. cooldown.

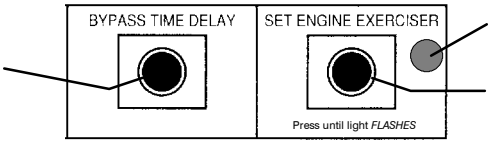

status light

Press and hold for 5 sec. or until status light blinks rapidly to set exercise period immediately and every week hereafter (generator starts).

If *Exerciser with Load* is set, transfers load to Emergency.

Figure 5-1. Operator panel pushbuttons and light.

Select below either *Exercise without Load* or *Exercise with Load* according to the setting of DIP switch S1, actuator 8. The load transfers from the Normal source to Emergency source (generator) and back again if *Exercise with Load* is selected.

Exercise without Load, DIP Switch S1, Actuator 8 off (8) How to Set Built–In Timer

Step	Push Button	Status Light	Function	Explanation
1	*SET ENGINE EXERCISER* hold 5 sec.	blinks rapidly ●○●○●○	set exercise period	Exercise the generator now and every week at this time hereafter.
2	release	blinks slowly ●○○●○○	exercise period now active	Generator starts and runs.
3	press *BYPASS TIME DELAY*	● stays on	cancel active exercise period	Generator stops.
4	—	● stays on	generator off	Exerciser enabled; repeats every 7 days.

Exercise with Load, DIP Switch S1, Actuator 8 on (8) How to Set Built–In Timer

Step	Push Button	Status Light	Function	Explanation
1	*SET ENGINE EXERCISER* hold 5 sec.	blinks rapidly ●○●○●○	set exercise period	Exercise the generator now and every week at this time hereafter.
2	release	blinks slowly ●○○●○○	exercise period now active	Generator starts and runs; the load transfers to Emergency.
3	press *BYPASS TIME DELAY*	blinks slowly ●○○●○○	cancel active exercise period	The load retransfers to Normal; then generator runs for 5 minute cooldown (light blinks slowly during cooldown).
4	—	● stays on	generator off	Exerciser enabled; repeats every 7 days.

NOTE: Every time *SET ENGINE EXERCISER* push button is pressed (held 5 seconds) the exercise period is changed.

Optional Accessory 11BG – SOURCE AVAILABILITY SIGNAL & PROGRAMMABLE ENGINE EXERCISER MODULE

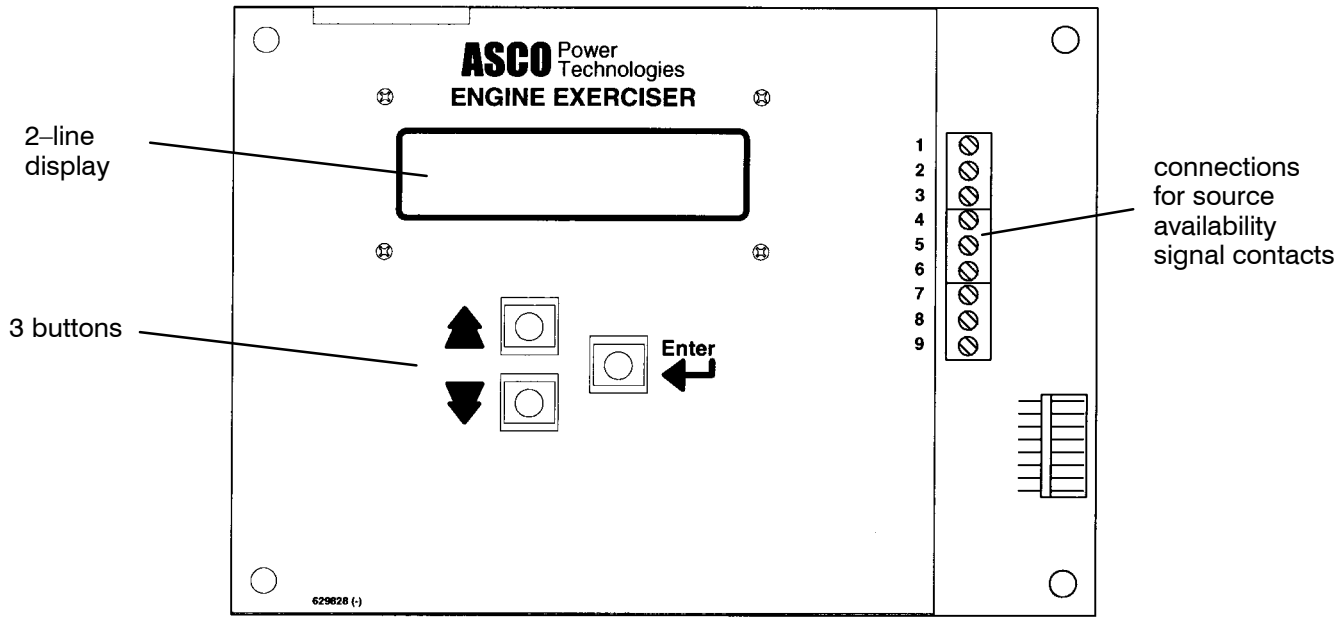

Figure 5–2. Accessory 11BG module (mounted behind operator interface and connected to the controller) includes source availability signal contacts and a programmable engine exerciser.

Source Availability Signal Contacts

The module provides one Form C contact each for the normal and emergency sources signal the acceptability of the source as sensed by the controller. The signal contacts operate in conjunction with the *Source Available* lights on the operator interface. Field wiring terminals are provided as shown in Figure 5–3 and the wiring diagram.

Contact ratings:

2 amps @ 30 Vdc, 0.5 amp. @ 125 Vac resistive

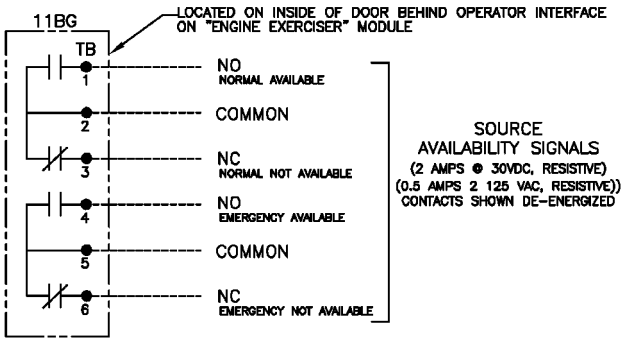

Figure 5–3. Source availability signal contacts.

Programmable Engine Exerciser

The module includes a programmable engine exerciser that provides for weekly or biweekly operation. This optional exercise timer may have to be turned on (enabled) by setting the S1 DIP switch actuator 7 to off, and S2 DIP switch actuator 5 to off. A backup battery in the controller (see page 4–2 and page 5–3) must be turned on to maintain the settings and to allow programming with the normal and emergency power turned off (page 5–1).

The programmable engine exerciser incorporates a 7 day or 14 day time base. Proper controller settings must be made to determine whether or not the test will be done with or without load transfer (S1 DIP switch actuator 8).

See next page for instructions on setting the timer.

DIP Switch Settings in the Controller

(see page 4–2)

FUNCTION	S1 DIP SWITCH		S2 DIP SWITCH	
Opt. Timer Enabled	Actuator 7 off	7	Actuator 5 off	5
Opt. Timer Disabled	Actuator 7 off	7	Actuator 5 on	5
Exercise without Load	Actuator 8 off	8		
Exercise with Load	Actuator 8 on	8		

Shaded DIP switches are standard factory settings.

How to Set Optional Programmable Engine Exerciser (part of Acc. 11BG module)

⚠ DANGER

Hazardous voltage capable of causing shock, burns, or death is used in this transfer switch. Deenergize both Normal & Emergency power sources before programming the exerciser.

Navigating the Menu

Use the UP and DOWN arrow keys to move through the displays.

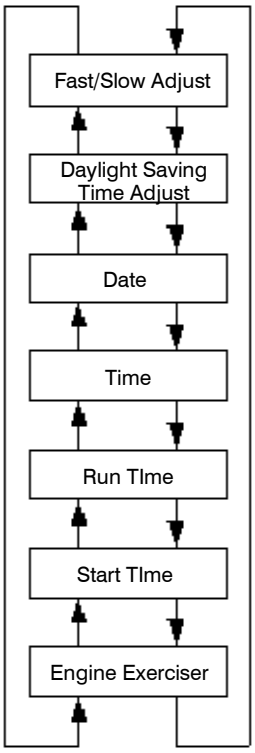

Changing the Parameters

Use the UP and DOWN arrow keys to move though the displays to the parameter to be changed. Push the ENTER key to start the editing process. The first parameter will flash. Use the UP and DOWN arrow keys to adjust the parameter to the desired value and press the ENTER key to save the value. The next parameter will now flash. Repeat the process until each parameter is properly configured.

Engine Exerciser Display

The Engine Exerciser Display shows the status of the engine exerciser. When the unit is shipped from the factory the programmable engine exerciser is "Disabled" and must be set to "Enabled" by the customer. When the engine exerciser is running, this display will count down the remaining time until the end of the exercise period.

Start Time Display

The Start Time Display shows the engine exerciser start time. There are four parameters that determine the start time:

weekly ("Every") or bi–weekly ("Alt") operation
day of week ("Sun" through "Sat")
start hour (0 through 23)
start minutes (0 through 59)

For example, if the user wants the exerciser to run every other Saturday at 3 PM, the proper configuration would be:

"Alt Sat @ 15:00"

NOTE: When choosing bi–weekly operation, the exerciser will always run on the week designated "(1)" on the date display.

Run Time Display

The Run Time Display shows the run time for the engine exerciser. The default setting from the factory is 30 minutes.

Time Display

The Time Display shows the present system time. The format is "hours:minutes:seconds".

NOTE: During total power outages, power to the accessory is maintained by a battery in the Controller (see page 4–2). Be sure that the 9–volt alkaline battery is fresh and enabled (jumper in ON position) so that the time and date settings are not lost.

Date Display

The Date Display shows the present system date. The format is "day of week (week) month/day of month/year".

NOTE: Week is either week 1 or week 2. This is used in conjunction with the bi–weekly timer.

Daylight Savings Time Adjust Display

This display shows whether the automatic daylight saving time adjustment is active. The factory default is "NO". If enabled, the unit will automatically adjust for daylight saving time at 2 AM on the first Sunday of April and the last Sunday of October.

Fast / Slow Adjust Display

This display shows the automatic fast/slow adjustment value. The factory default is 0. This feature can be used to trim a clock that runs fast or slow. For example, if your clock runs 10 seconds slow per week, change the fast/slow adjust value to "+10" and the unit will automatically add 10 seconds to the clock every week.

NOTE: Adjustments are made Sunday morning at 2 AM. If you want your exerciser period to start at 2 AM on Sunday, you cannot use this feature and the adjustment must be set to 0.

Programmable Engine Exerciser Settings

Fill in your settings for future reference

Weekly or Bi–weekly	Day of Week	Start Time	Run Time
Every = weekly *Alt* = bi–weekly	*Sun* through *Sat*	*0* – *23* hour *0* – *59* minute	*0* – *23* hour *0* – *59* minute *30* minutes is the default setting

Date exerciser was set _____

CONTROL FEATURES *(continued)*

INPHASE MONITOR FOR MOTOR LOAD TRANSFER

Inphase monitoring logic controls transfer and retransfer of motor loads, so that inrush currents do not exceed normal starting currents. It avoids nuisance tripping of circuit breakers and mechanical damage to motor couplings.

The Motor Load Transfer feature is built into the controller. DIP switch S1 (actuator 5) activates this feature: right = ON, left = OFF.

FUNCTION	S1 DIP SWITCH	
enable	Actuator 5 on	
disable	Actuator 5 off	

☐ Shaded DIP switches are standard factory settings.

Note

If the Motor Load Transfer feature is enabled, it will be activated following the Load Disconnect Feature Delay Before Transfer delay.

LOAD DISCONNECT FEATURE

Connect external circuits to the terminals indicated on the Wiring Diagram provided with the ATS.

The double throw (Form C) contact is rated for 28 VDC or 120 VAC (5 amps resistive). The contact operates prior to a selectable 0, 3, 10, or 20 second delay before transfer of the Automatic Transfer Switch. The contact resets either immediately following transfer or after the same delay as set for pre–signal before transfer.

Time delay between the load disconnect control signal and initiation of transfer is set on the controller with DIP switch S2 (actuators 6, 7, 8) as shown below:

Delay Before Transfer

LD TDBT	S2 DIP SWITCH	
0 (disable)	Actuator 7 on Actuator 8 on	
3 seconds	Actuator 7 on Actuator 8 off	
10 seconds	Actuator 7 off Actuator 8 on	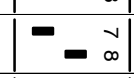
20 seconds	Actuator 7 off Actuator 8 off	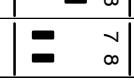

☐ Shaded DIP switches are standard factory settings.

Delay After Transfer*

LD TDAT	S2 DIP SWITCH	
enable	Actuator 6 on	
disable	Actuator 6 off	

*Enabling the Delay After Transfer will cause the control signal to reset after the same delay as set for the Delay Before Transfer.

REMOTE CONTROL FEATURES

These remote control features require a customer–supplied normally closed contact suitable for a 5 V dc low energy circuit. Refer to the Wiring Diagram provided with the ATS. Activate appropriate DIP switch S2 actuators below.

Remote Test (terminals CP6–7)

RTSW	S2 DIP SWITCH	
disable	Actuator 3 on	
enable	Actuator 3 off	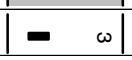

Remote Transfer to Emergency (CP8–9)

RT /E	S2 DIP SWITCH	
disable	Actuator 2 on	
enable	Actuator 2 off	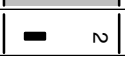

Bypass Transfer Time Delay (CP12–13)

TD E/N BYP.	S2 DIP SWITCH	
disable	Actuator 1 on	
enable	Actuator 1 off	

Inhibit Transfer to Emergency (CP10–11)

N/E INHIB.	S2 DIP SWITCH	
disable	Actuator 4 on	
enable	Actuator 4 off	

OPTIONAL STRIP HEATER (Accessory 44)

Accessory 44 Strip Heater is designed to keep ambient temperatures within the Automatic Transfer Switch enclosure at acceptable levels. This accessory consists of a mounting bracket with strip heater, thermostat, and terminal block. A transformer with fuses is included when the power for the assembly is derived from voltages above 120 V ac. The 120 V ac customer powered assembly does not include a transformer. This optional accessory is available factory installed or in kit form.

Turn the thermostat's dial to required setting as shown.

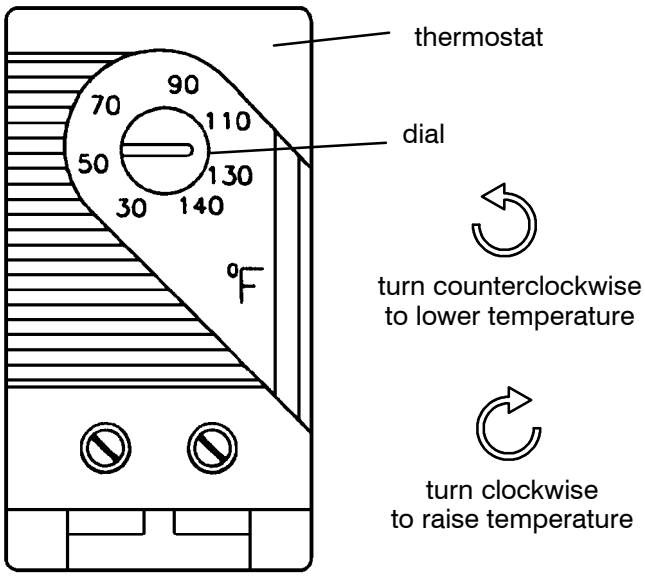

Figure 5–4. Thermostat.

AVAILABLE KITS FROM ASCO

Controls

Description	Accessory	Kit
Programmable Engine Exerciser & Source Availability Contacts	11BG	K629830
Serial Communication Module	72A	K601110

Strip Heater – Accessory 44

Description	Accessory	Kit
120 volt customer supplied voltage (without transformer)	44A	K613127–001
208 – 480 volt ATS derived voltage (with transformer)	44G	K613127–002
380 volt ATS derived voltage (with transformer)	44G	K613127
550 – 600 volt ATS derived voltage (with transformer)	44G	K613127–003

INDEX

A

accessories, *see* optional accessories

auxiliary circuits, 1–3

B

barriers, 1–1

battery, 4–2, 5–1

buttons, push, 3–1

bypass time delay, 1–5, 2–1, 3–1

C

cable
  lugs, 1–1
  preparation, 1–1

catalog number, inside cover

cleaning, 3–1

connections
  engine control contact, 1–2
  line, 1–1

contacts
  auxiliary, 1–2
  engine control, 1–2
  main, 3–1
  source availability signal, 5–2

control features, 5–1
  load disconnect, 5–5
  motor load transfer, 5–5 (optional Accessory)
  plant exerciser, 5–1, 5–2, 5–3, 5–4

controller, 4–1, 4–2
  codes, cover
  cover removal, 4–2
  disconnecting, 3–1
  time delay potentiometers, 4–2

D

DIP Switches, 4–1, 4–2, 5–1, 5–2, 5–5

E

electrical operation, 1–5

engine exerciser, 5–1, 5–2, 5–3, 5–4

engine starting contacts, 1–2

F

features, *see* control features

frequency, pickup & dropout settings, 4–1

functional test, 1–3, 1–4, 1–5

G

ground, controller, 1–3

H

harness, 1–3
  disconnect plugs, 3–1

help, service 3–2

I

inphase monitor, 5–5 (optional Accessory)

inspection, 3–1

installation, 1–1

insulator backing piece, 1–1
  illustration of, 1–1
  warning, 1–1

L

labels,
  engine starting contacts, 1–2
  inputs / outputs, 1–2
  rating, cover

lights, 1–4, 1–5, 5–1

load disconnect feature, 5–5 (optional Accessory)

lubrication, 3–1

M

maintenance, preventive, 3–1

manual load transfer, 3–2
  warning, 3–2

manual operation, 1–3
  illustration of, 1–3
  warning, 1–3

motor load transfer feature, 5–5

N

nameplate, inside cover

O

operation
  electrical, 1–5
  manual, 1–3
    illustration & warning, 1–3
  sequence of, 2–1

optional accessories
  programmable engine exerciser & source availability signal contacts, 5–2, 5–3, 5–4
  serial communication module, 5–6
  strip heater, 5–6

P

parts, 3–1

problem, 3–2

programmable engine exerciser, 5–2, 5–3, 5–4

R

rating label, cover

remote control features, 5–5
  bypass transfer time delay, 5–5
  inhibit transfer to emergency, 5–5
  remote test, 5–5
  remote transfer to emergency, 5–5

replacement parts, 3–1

S

set engine exerciser, 5–1, 5–2, 5–3, 5–4

settings
  changing, 4–1
  factory, 4–1
  frequency, 4–1
  phase, 4–1
  time delay, 4–1
  voltage, 4–1

service 3–2

T

test, functional, 1–3, 1–4, 1–5

time delay
  adjustment, 4–1
  gen–set cooldown, 4–1
  how to change, 4–2
  override momentary outages, 4–1
  settings, 4–1
  transfer to emergency, 4–1
  transfer to normal, 4–1

timer (plant exerciser), how to set, 5–1, 5–2, 5–3, 5–4

transfer switch test, 1–5, 3–1

trouble–shooting, 3–2

V

voltage, phase, 4–1

voltage, pickup and dropout settings, 4–1

Printed in USA

© ASCO Power Technologies, L.P. 2003

Operator's Manual

ASCO® Series 300 Automatic Transfer Switches G design 1000 through 3000 amps

TABLE OF CONTENTS

	section
INSTALLATION	1
SEQUENCE OF OPERATION	2
TESTING & SERVICE	3
ADJUSTMENTS	4
CONTROL FEATURES	5
INDEX	back cover

⚠ DANGER

DANGER is used in this manual to warn of high voltages capable of causing shock, burns, or death.

⚠ WARNING

WARNING is used in this manual to warn of possible personal injury.

⚠ CAUTION

CAUTION is used in this manual to warn of possible equipment damage.

Refer to the outline and wiring drawings provided with ASCO Series 300 ATS for all installation details.

An experienced licensed electrician must install the ATS.



1000, 1200, 1600 amp. sizes



2000 amp. size

ASCO POWER TECHNOLOGIES L.P. 50 Hanover Road, Florham Park, New Jersey 07932–1591 USA
telephone 1 800 937–2726 (ASCO), for service call 1 800 800–2726 (ASCO) www.asco.com

381333–122 C

ASCO POWER TECHNOLOGIES CANADA PO Box 1238, 17 Airport Road, Brantford, Ontario, Canada N3T 5T3
telephone 519 758–8450, fax 519 758–0876, for service call 1 888 234–2726 (ASCO) www.asco.ca

Katolight Service - Master Repair Manual - Page 3799

Nameplate

The Transfer Switch nameplate includes data for each specific ASCO Series 300 ATS. Use the ATS only within the limits shown on this nameplate.

Catalog Number Identification

A typical Catalog Number is shown below with its elements explained. The example is for a G–design Series 300 ATS with switched neutral, 3 pole, 2000 amp, 480 V, in a Type 1 enclosure:

G300 ___ 3 2000 N 1 C

Neutral	Phase Poles	Amperes	Voltage	Controller	Enclosure
B – switched	2 – single Ø	1000	C 208 / L 440	1 – standard	C – type 1
C – overlapping	3 – three Ø	1200	D 220 / M 460	1X – if accessories ordered	F – type 3R
blank – solid		1600	E 230 / N 480		G – type 4 *
		2000	F 240 / P 550		L – type 12 *
		2600	H 380 / Q 575		blank – open type
		3000	J 400 / R 600		
			K 415		

* type 4 & 12 enclosures are available only for 1000, 1200, & 1600 amp. sizes

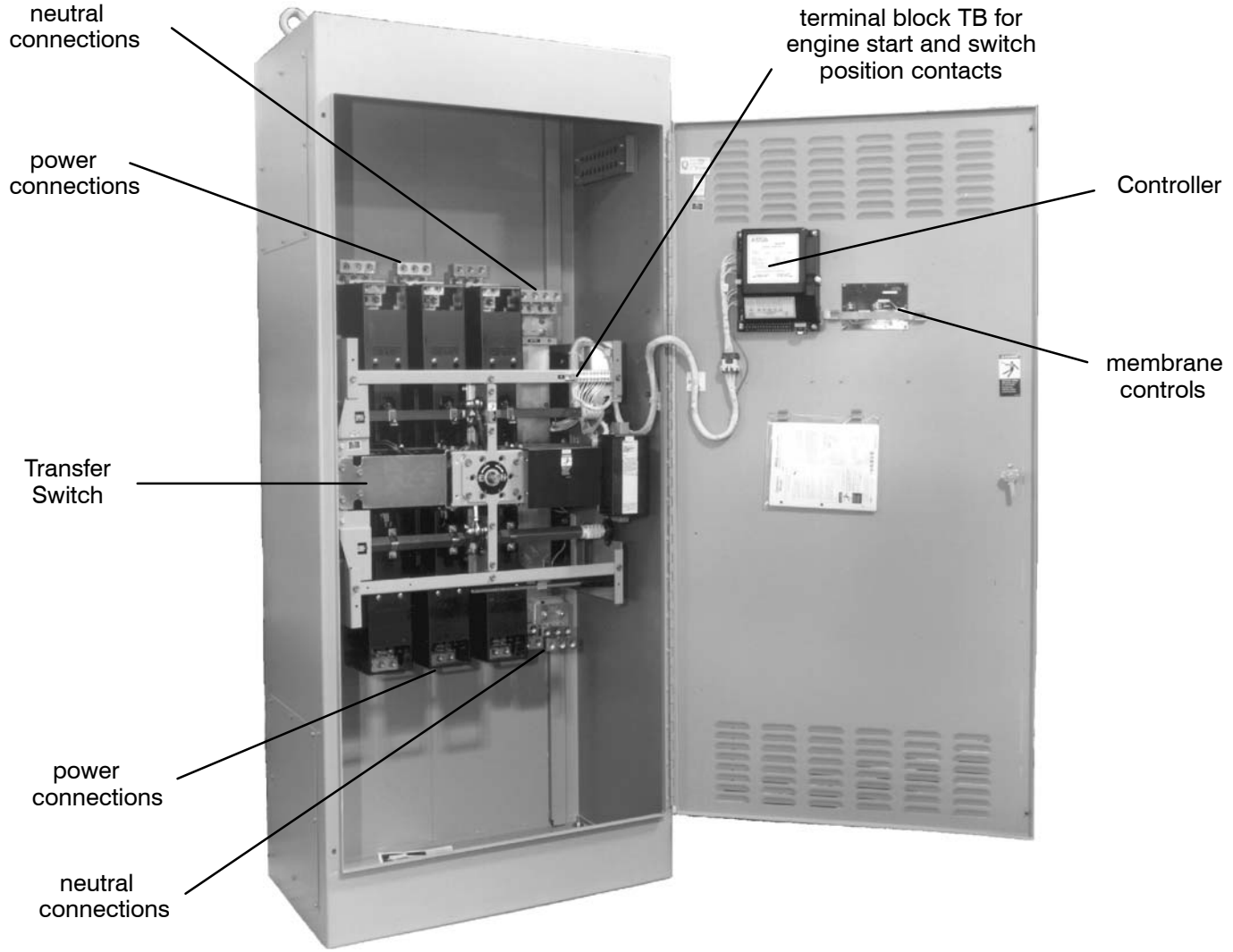

2000 amp. size in typical enclosure with location of customer connections

SECTION 1 INSTALLATION

ASCO Series 300 Automatic Transfer Switches (ATSs) are Listed under Underwriters Laboratories UL 1008 Standard for Safety for Automatic Transfer Switches. ASCO Series 300s are also Listed under CSA C22.2 No. 178 Standard for Automatic Transfer Switches. All control features are UL Component Recognized, which assures that ASCO automatic transfer switches meet OSHA Safety Requirements and will be acceptable to electrical inspectors.

ASCO Series 300 Automatic Transfer Switches are suitable for emergency and standby system applications. They meet emergency system rating requirements as defined in National Electrical Code (NEC) Article 700 and UL 1008. Also, they are suitable for the requirements of NEC Article 517 – Health Care Facilities, NEC Article 701 – Legally Required Standby Systems, NEC Article 702 – Optional Standby Systems, NFPA 99 Health Care Facilities, and NFPA 110 Emergency and Standby Power Systems.

Rating Label

Each automatic transfer switch contains a rating label to define the loads and fault circuit withstand / closing ratings. Refer to the label on the transfer switch for specific values.

⚠ WARNING

Do not exceed the values on the rating label. Exceeding the rating can cause personal injury or serious equipment damage.

Series 300 Automatic Transfer Switches are factory wired and tested. Installation requires skid removal then securing the enclosure to the supporting foundation.

Remove the Shipping Skid

Open the front door and remove the four lag screws (two in front, two in rear) securing the enclosure to the wood skid.

Supporting Foundation

The supporting foundation for the enclosure must be level and straight. Refer to the applicable enclosure outline drawing included with the Series 300 for all mounting details including door opening space.

If bottom cable entry is used, the foundation must be prepared so that the conduit stubs are located correctly. Refer to the enclosure outline drawing for specified area and location. Provide cable bending space and clearance to live metal parts. When a concrete floor is poured, use interlocking conduit spacer caps or a wood or metal template to maintain proper conduit alignment.

Mounting

Refer to the applicable enclosure outline drawing furnished with this switch and mount the Series 300 according to details and instructions shown on diagram.

Auxiliary Cable Box for 1000–2000 amp

An auxiliary cable box is required if the power cables do not enter the enclosure directly adjacent to the terminal lugs (for example, if all power cables enter the top or bottom). Order ASCO part no. 609027 if needed.

⚠ CAUTION

Do not route the power cables along the sides of the Transfer Switch.

Line Connections

Refer to the Wiring Diagram provided with your Series 300 ATS. All wiring must be made in accordance with the National Electrical Code and local codes.

It is unnecessary to remove pole covers from the transfer switch. If you do remove them, reinstall them carefully.

⚠ DANGER

De–energize the conductors before making any line or auxiliary circuitry connections. Be sure that Normal and Emergency line connections are in proper phase rotation. Place engine generator starting control in the OFF position. Make sure engine generator is not in operation.

Testing Power Conductors

Do not connect the power conductors to the ASCO Series 300 transfer switch until they are tested. Installing power cables in conduit, cable troughs and ceiling-suspended hangers often requires considerable force. The pulling of cables can damage insulation and stretch or break the conductor's strands. For this reason, after the cables are pulled into position, and before they are connected, they should be tested to verify that they are not defective or have been damaged during installation.

⚠ CAUTION

Protect the automatic transfer switch from construction grit and metal chips to prevent malfunction or shortened life of the ATS.

Connecting Power Conductors

After the power cables have been tested, connect them to the appropriate terminal lugs on the transfer switch as shown on the wiring diagram provided with this Series 300. Make sure the lugs provided are suitable for use with the cables being installed. Standard terminal lugs are solderless screw type and will accept the wire sizes listed on the drawings provided with the Series 300. Be careful when stripping insulation from the cables; avoid nicking or ringing the conductor. Remove surface oxides from cables by cleaning with a wire brush. When aluminum cable is used, apply joint compound to conductors. Tighten cable lugs to the torque specified on rating label.

Controller Ground

A grounding wire must be connected to the controller's lower left mounting stud. Because the controller is mounted on the enclosure door, a conductive strap must be used between the enclosure and the door. This connection provides proper grounding which does not rely upon the door hinges.

Engine Starting Contacts

Customer connections for engine control contact and TS auxiliary contacts connections are located on terminal block TB which is mounted on the front of the transfer switch. Refer to wiring diagram provided with the Series 300 ATS and connect the engine start wires to the appropriate terminals. See Figure 1–1 and Table A.

Table A. Engine start connections.

When normal source fails	Terminals on transfer switch
contact closes	TB1 and TB2
contact opens	TB1 and TB3

Auxiliary Circuits

Connect auxiliary circuit wires to appropriate terminals on transfer switch terminal block TB as shown on the wiring diagram provided with this Series 300 Automatic Transfer Switch. Make the necessary auxiliary connections by referring to **Section 5, Control Features**.

Harnesses

The transfer switch is connected to the left side of the controller by a plug–in harness (two plugs).

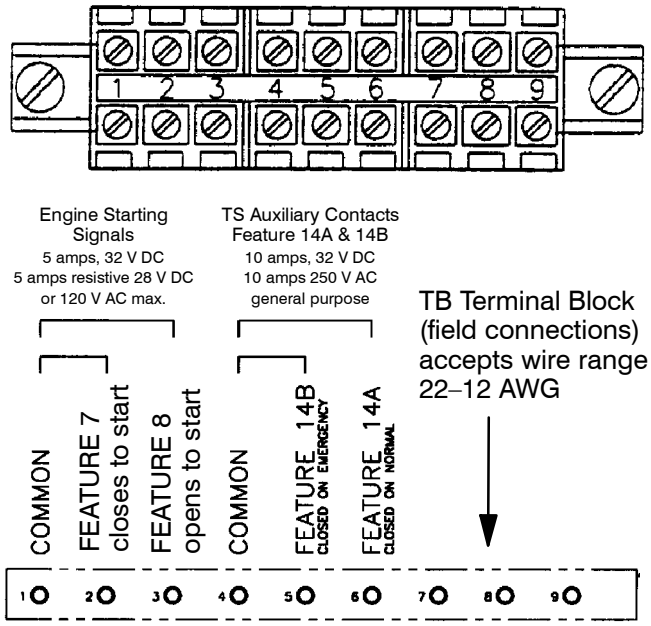

Figure 1-1. Connections to engine starting contact terminal block located on the Transfer Switch.

Connections to Controller for other Control Features

(located on bottom of Controller)

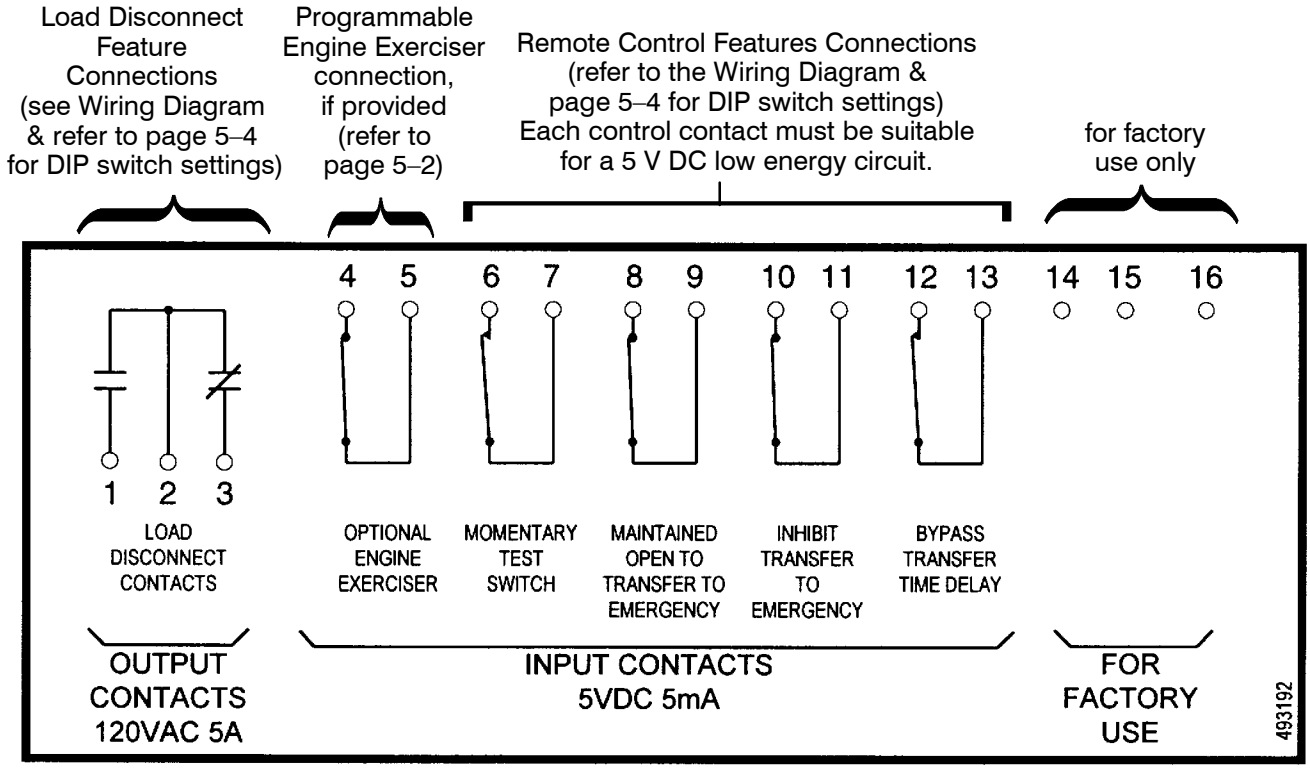

Figure 1-2. Input / output label on the Controller showing possible connections to the lower terminal block.

INSTALLATION *(continued)*
Functional Test

The Functional Test consists of three checks: manual operation, voltage checks, and electrical operation.

⚠ CAUTION

Do these checks in the order presented to avoid damaging the automatic transfer switch.

Read all instructions on the Wiring Diagram and labels affixed to the automatic transfer switch. Note the control features that are provided and review their operation before proceeding.

1 – Manual Operation Test

A detachable maintenance handle is provided on the frame of the Transfer Switch for maintenance purposes only. Manual operation of the transfer switch should be checked before it is energized (operated electrically).

⚠ WARNING

Do not manually operate the transfer switch until both power sources are disconnected: open both circuit breakers.

Table B. Maintenance handle positions.

ATS Position		Indicators
Normal	E / N	OPEN upper contacts open CLOSED lower contacts closed
Emergency	E / N	CLOSED upper contacts closed OPEN lower contacts open

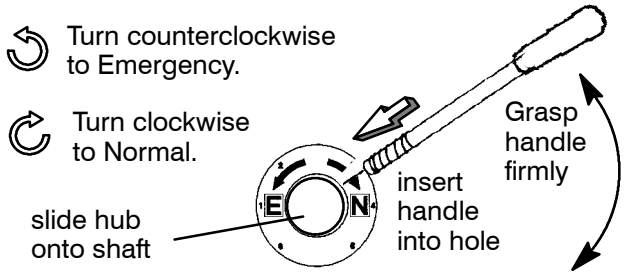

Figure 1-3. Maintenance handle.

1. After deenergizing both power sources, open the enclosure door. Locate and remove the maintenance handle and hub stored on the transfer switch frame. Then install the hub onto the center operator shaft and insert the handle firmly into the hole in the side of the hub (spring fully compressed). See Figure 1–3 and 1–4 and Table B.
2. If the transfer switch is closed on Normal (window shows *CLOSED*), grasp handle firmly and turn it counterclockwise. The transfer switch should operate smoothly without binding. If it does not, check for shipping damage or construction debris.
3. Turn the handle clockwise to return the transfer switch to the Normal position. Observe that the window indicators (left side) show the top shaft *OPEN* and the bottom shaft *CLOSED*.

   Note: If Normal and Emergency connections are reversed this operation is also reversed.
4. Remove the maintenance handle and hub and store it on the frame in the place provided.

⚠ WARNING

Verify that the maintenance handle and hub have been removed before proceeding!

Now continue to **2 – Voltage Checks** on next page.

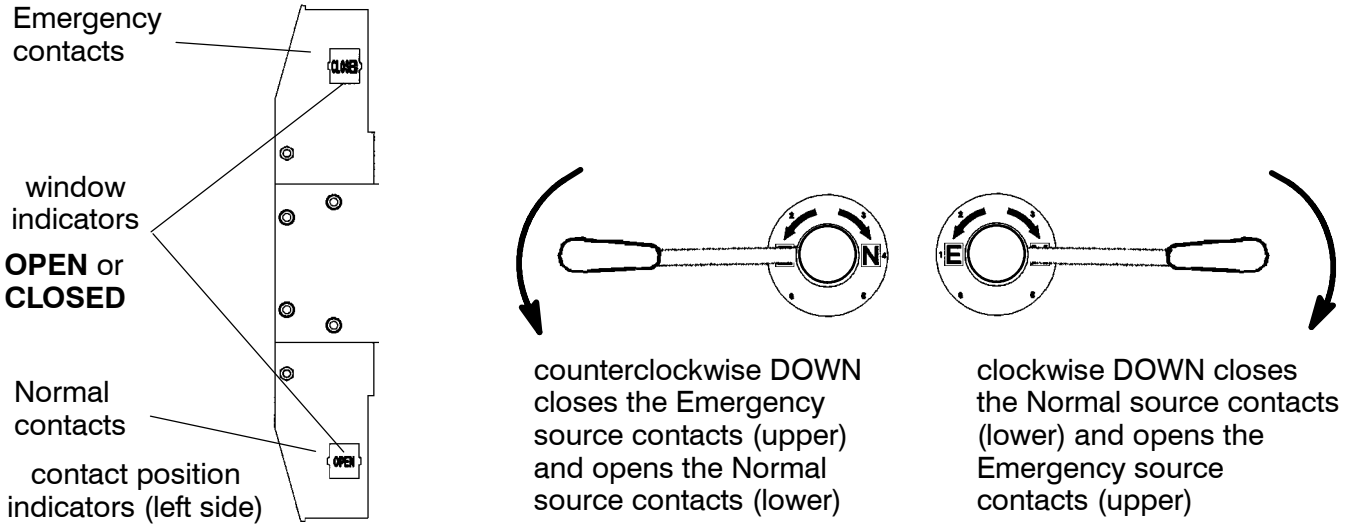

Figure 1-4. Contact position indicators and maintenance handle operation.

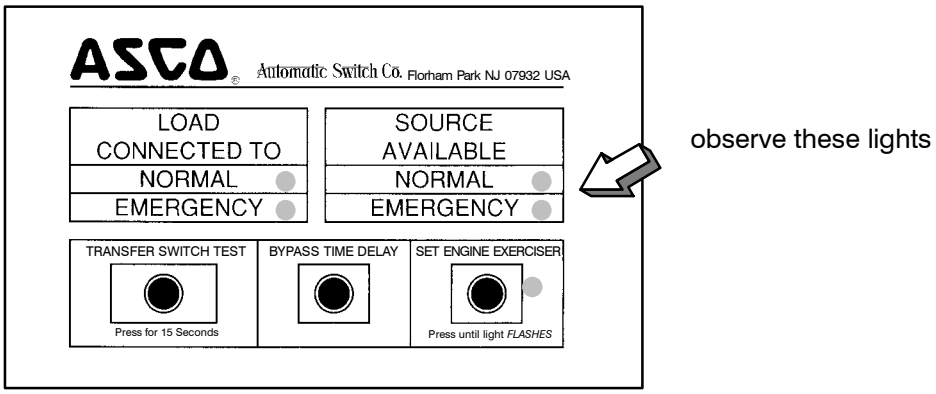

Figure 1–5. Standard controls and indicators.

2 – Voltage Checks

First check nameplate on transfer switch; rated voltage must be the same as normal and emergency line voltages.

⚠ CAUTION

Verify that the feeders have been connected to the proper lugs.

⚠ DANGER

Use extreme caution when using a meter to measure voltages in the following steps. Do not touch power terminals; shock, burns, or death could result !

Perform steps 1 through 6 at the right. Observe the status lights. See Figure 1–5.

- ● Black circle means light is on.
- ❍ White circle means light is off.

* If necessary, adjust voltage regulator on the generator according to the manufacturer's recommendations. The Automatic Transfer Switch will respond only to the rated voltage specified on the Transfer Switch nameplate.

1	Close the normal source circuit breaker. The *Transfer Switch Connected To Normal* and the *Normal Source Available* lights should come on.	SOURCE AVAILABLE NORMAL ● EMERGENCY ○
2	Use an accurate voltmeter to check phase to phase and phase to neutral voltages present at the transfer switch normal source terminals.	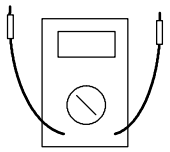
3	Close the emergency source circuit breaker. (Start generator, if necessary.) The *Transfer Switch Connected To Normal* and the *Emergency Source Available* lights should come on.	SOURCE AVAILABLE NORMAL ○ EMERGENCY ●
4	Use an accurate voltmeter to check phase to phase and phase to neutral voltages present at the transfer switch emergency source terminals.*	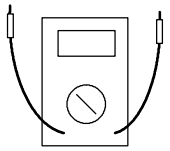
5	Use a phase rotation meter to check phase rotation of emergency source; it must be the same as the normal source.	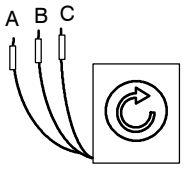
6	Shut down the engine–generator, if applicable. The *Emergency Source Accepted* light should go off. Then put the starting control selector switch (on the generator set) in the *automatic* position. Close enclosure door.	SOURCE AVAILABLE NORMAL ○ EMERGENCY ○

Now continue to **3 – Electrical Operation** on next page.

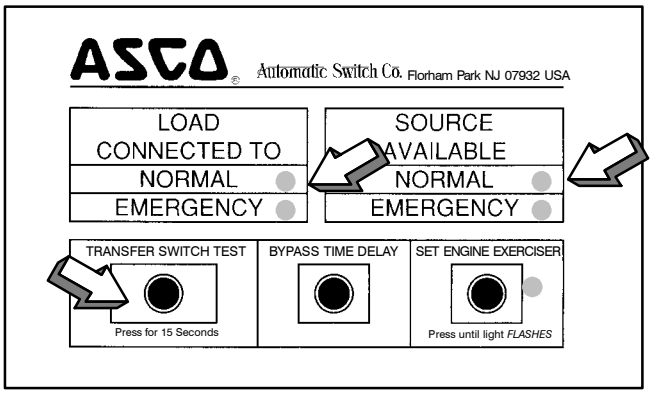

Figure 1–6. Standard controls and indicators.

3 – Electrical Operation

First check nameplate on transfer switch; rated voltage must be the same as normal and emergency line voltages.

⚠ CAUTION

Verify that the feeders have been connected to the proper lugs.

⚠ DANGER

Use extreme caution when using a meter to measure voltages in the following steps. Do not touch power terminals; shock, burns, or death could result !

Perform steps 1 through 8 at the right. Observe the status lights. See Figure 1–6.

- ● Black circle means light is on.
- ❍ White circle means light is off.

NOTE: If Motor Load Transfer feature is activated, then transfer may not occur immediately after the respective time delays. Transfer will only occur when the phase relationship between sources is correct.

This completes the Functional Test of the ASCO Series 300 Automatic Transfer Switch. Leave the engine–generator starting control in the *automatic* position.

1	The normal source must be available and the generator must be ready to start. Check that the *Normal Source Available* light is on.	SOURCE AVAILABLE NORMAL ● EMERGENCY ○
2	Press and hold the *Transfer Switch Test* button until the engine starts and runs. This should happen within 15 sec.	TRANSFER SWITCH TEST
3	The *Emergency Source Available* light should come on.	SOURCE AVAILABLE NORMAL ● EMERGENCY ●
4	The transfer switch should transfer to the Emergency position. The *Load Connected to Emergency* light should come on and the *Load Connected to Normal* light should go off.	LOAD CONNECTED TO NORMAL ○ EMERGENCY ●
5	If the *transfer to emergency delay* is used the transfer should occurs after a time delay (up to 5 minutes). For immediate transfer press the *Bypass Time Delay* button.	BYPASS TIME DELAY
6	The transfer switch should transfer back to the Normal position. The *Load Connected to Normal* light should come on and the *Load Connected to Emergency* light should go off.	LOAD CONNECTED TO NORMAL ● EMERGENCY ○
7	If the *retransfer to normal delay* is used the retransfer should occur after a time delay (up to 30 minutes). For immediate retransfer press the *Bypass Time Delay* button.	BYPASS TIME DELAY
8	The *unloaded running delay* keeps the generator running for 5 minutes (cool–down period). Then the generator should stop and the *Emergency Source Available* light should go off.	SOURCE AVAILABLE NORMAL ● EMERGENCY ○

SECTION 2 SEQUENCE OF OPERATION

Transfer To Emergency

The sequence for load transfer to emergency source begins automatically when normal source voltage falls below the preset dropout point or when *Transfer Switch Test* button is pressed. An under voltage condition on any phase of the normal source is detected by the sensor.

When the normal source voltage fails or the *Transfer Switch Test* button is pressed, the SE relay de-energizes and relay NR begins its timing cycle (1 or 3 seconds, *momentary normal source outage delay*). The NR relay is provided with a time delay on dropout to override momentary outages and prevent nuisance starting of the engine-driven generator. If the normal source voltage returns above the sensor dropout setting before the time delay expires, the NR relay timing cycle is reset to zero and relay SE energizes.

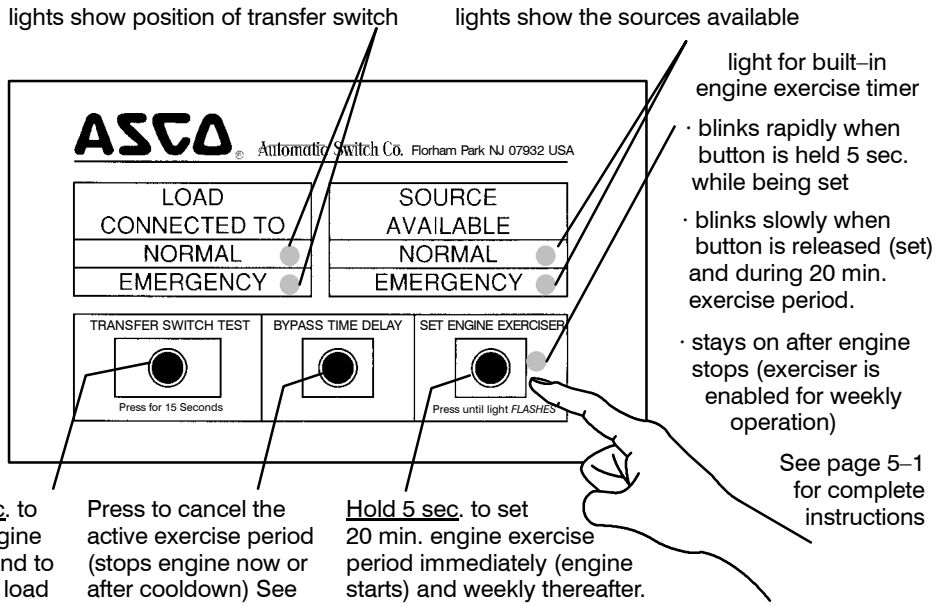

Figure 2–1. Membrane controls and indicator lights.

If the normal source voltage does not return above the sensor dropout setting before the time delay expires, the NR relay de-energizes and signals the engine-driven generator to start. At the same time, a voltage and frequency sensor begins monitoring the emergency source. The sensor will accept the emergency source only when both voltage and frequency reach preset pickup points. Usually about ten seconds elapse from dropout of the NR relay to acceptance by the sensor. This time span occurs because the engine-driven generator must crank, start, and run up to nominal pickup points. For this reason, if the *Transfer Switch Test* button is pressed it must be held for 15 seconds. If the emergency source is available immediately, the sensor may accept it as soon as NR relay drops out.

When the emergency source is accepted by the sensor, relay ER begins its timing cycle (*transfer to emergency delay*). ER relay is provided with an adjustable (0 to 5 minutes) time delay on pickup to delay transfer of the load to the emergency source. For immediate transfer press *Bypass Time Delay* button.

ER relay energizes, the TS coil is energized, the transfer switch operates, and all switch contacts (mains, controls, auxiliaries) reverse position. The transfer switch is now supplying the load from the emergency source.

The transfer switch will remain in the Emergency position until the normal source is restored. If the *Transfer Switch Terst* button is used, the transfer switch will remain on emergency until the *retransfer to normal delay* times out.

Retransfer to Normal

The sequence for load retransfer to the normal source automatically begins when the voltage sensor detects restoration of the normal source. The voltage level must rise above the preset pickup point on all phases before the sensor will accept the normal source.

When the normal source is accepted by the sensor, relay SE begins its timing cycle (adjustable 1 sec. to 30 min., *retransfer to normal delay*). For immediate retransfer press *Bypass Time Delay* button. SE relay is provided with a time delay on pickup to prevent immediate load retransfer to the normal source. The delay insures that the normal source has stabilized before reconnection of vital loads. If the normal source voltage falls below the present dropout point before the time delay expires, the timing cycle is reset to zero. If the emergency source fails for more than 4 seconds during the timing cycle, ER relay drops out and the load is immediately retransferred to the normal source, if that source is acceptable.

SE relay energizes and ER relay is dropped out. The TS coil is energized, the transfer switch operates, and all switch contacts (mains, controls, auxiliaries) reverse position. The transfer switch is now supplying the load from the normal source again.

Upon retransfer to the normal source, NR relay begins its timing cycle (*unloaded running delay [engine cooldown]*). NR relay is provided with a 5 minute time delay on pickup to keep the engine running for a cool-down period.

NR relay energizes after the time delay and signals the engine-driven generator to shut down. All circuits are reset for any future normal source failure.

Activation of standard control features shown in Section 5 will alter the sequence of operation and introduce additional time delays during transfer operations.

Katolight Service - Master Repair Manual - Page 3806

SECTION 3 TESTING & SERVICE

PREVENTIVE MAINTENANCE

Reasonable care in preventive maintenance will insure high reliability and long life for the automatic transfer switch.

Operate the switch at least once a month. Perform this four step Electrical Operation Test. This is a test with load transfer.

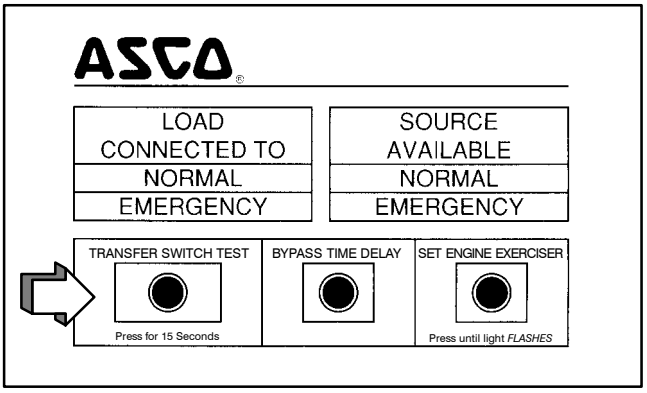

Transfer Switch Test

1.	Press and hold the door-mounted *TRANSFER SWITCH TEST* button until the engine starts and runs. This should happen within 15 seconds.
2.	The transfer switch will operate to the Emergency position. If the *Transfer To Emergency Delay* is used, the transfer will occur after a time delay (up to 5 minutes). For immediate transfer press *BYPASS TIME DELAY* button.
3.	The Transfer Switch will operate back to the Normal position after the *Retransfer To Normal Delay* (up to 30 minutes). For immediate retransfer press *BYPASS TIME DELAY* button.
4.	*Unloaded Running (Engine Cooldown) Delay* allows engine to run unloaded for 5 minutes.

Clean and inspect the switch once a year. De-energize all sources, then brush and vacuum away any excessive dust accumulation. Remove the transfer switch barriers and check contact condition. Replace contacts when pitted or worn excessively. Reinstall the barriers carefully.

Maintain transfer switch lubrication. The transfer switch has been properly lubricated, and under normal operating conditions no further lubricating is required. Renew factory lubrication if the switch is subjected to severe dust or abnormal operating conditions. Relubricate the operator if TS coil is replaced. Order ***lubrication kit 75-100***.

Replacement parts. Replacement parts are available in kit form. When ordering parts provide the Serial No. and Catalog No. from the transfer switch nameplate. Contact your local ASCO Power Technologies sales office.

DISCONNECTING THE CONTROLLER

The harness disconnect plugs are furnished for repair purposes only and should not have to be unplugged. If the controller must be isolated, follow these steps carefully.

Disconnecting the Plugs

⚠ WARNING

Do not unplug the controller until step 1a. or 1b. below is completed.

1. Observe the position of the transfer switch.
   a. If the transfer switch is in the *Normal* position, place standby engine starting control in the *off* position. Then open the emergency source circuit breaker.
   b. If the transfer switch is in the *Emergency* position, open the normal source circuit breaker. Place the engine starting control in the *test* or *run* position.
2. Separate the quick disconnect plugs by squeezing the latches. Do not pull on the harness wires.
3. Label, remove, and tape the signal wires connected to the engine start terminals on the transfer switch: TB1 and TB3, or TB1 and TB2.

Reconnecting the Plugs

⚠ WARNING

Do not reconnect the controller until step 1a. or 1b. and 2 below are completed.

1. Observe the position of the transfer switch.
   a. If the transfer switch is in the *Normal* position, be sure that the standby engine starting control is still in the *off* position. The emergency source circuit breaker still should be open.
   b. If the transfer switch is in the *Emergency* position, normal source circuit breaker still should be open.
2. Reconnect the signal wires connected to the appropriate engine start terminals on the transfer switch. See **Section 1**, *Engine Starting Contacts*.
3. The harness plugs and sockets are keyed. Carefully align the plugs with the sockets and press straight in until both latches click.
4. Restore the opposite source as follows:
   a. If the transfer switch is in the *Normal* position, place the standby engine starting control in the *automatic* position. Then close the emergency source circuit breaker.
   b. If the transfer switch is in the *Emergency* position, close the normal source circuit breaker. The load will be automatically retransferred to the normal source after the *Retransfer to Normal Delay*. For immediate retransfer, press *BYPASS TIME DELAY* button. Place the engine starting control in the *automatic* position.

Katolight Service - Master Repair Manual - Page 3807

MANUAL LOAD TRANSFER

This procedure will manually transfer the load if the controller is disconnected.

⚠ WARNING

Do not manually operate the transfer switch until both power sources are disconnected: open both circuit breakers.

1. Open normal and emergency source circuit breakers.
2. Use the maintenance handle to manually operate transfer switch to the opposite source. See page 1–3, *Manual Operation Test*.
3. If the transfer switch is in the Emergency position manually start the engine generator and then close the emergency source circuit breaker.

TROUBLE-SHOOTING

Note the control features that are activated or furnished on the switch and review their operation. Refer to **Section 5**, **Control Features**.

⚠ WARNING

Proceed with care!
The automatic transfer switch is energized.

Table 3-1. Trouble-Shooting Checks.

PROBLEM	CHECK IN NUMERICAL SEQUENCE		
	1 OPERATION	2 GEN-SET	3 VOLTAGE
Gen-Set does not start when the *TRANSFER SWITCH TEST* button is pressed and held for 15 seconds or when the normal source fails.	Hold the *TRANSFER SWITCH TEST* button 15 sec. or the outage must be long enough to allow for the 1 or 3 sec. *Momentary Normal Source Outage Delay* plus engine cranking and starting time.	Starting control must be in automatic position. Batteries must be charged and connected. Check wiring to engine starting contacts.	—
Transfer switch does not transfer the load to emergency source after the gen-set starts.	Wait for *Transfer to Emergency Delay* (0 to 5 min.) to time out. For immediate transfer, press the *BYPASS TIME DELAY* button. If Motor Load Transfer is active, wait for in-phase condition (see below).	Generator output circuit breaker must be closed. Generator frequency must be at least 57 Hz.	Voltmeter should read at least 90% of nominal phase to phase voltage between transfer switch terminals EA and EC (or EL1 and EL2 for 2 pole switches). * * These are factory settings.
Transfer switch does not transfer the load to normal source when normal returns or when *TRANSFER SWITCH TEST* button is released.	Wait for *Retransfer to Normal Delay* (1 sec. to 30 min.) to time out. For immediate re–transfer, press *BYPASS TIME DELAY* button. If Motor Load Transfer is active, wait for in-phase condition (see below).	—	Voltmeter should read at least 90% of nominal phase to phase voltage between transfer switch terminals NB and NC, NC and NA, and NA and NB (or NL1 and NL2 for 2 pole switches).
Gen-Set does not stop after load retransfer to the normal source.	Wait for the 5 minute *Unloaded Running Delay* to time out.	Starting control must be in automatic position.	—

Trouble-Shooting the Motor Load Transfer Feature (refer to page 5–3)

⚠ DANGER

Use extreme caution when using a meter to measure voltages in the following steps. Do not touch power terminals; shock, burns, or death could result !

1. Connect a voltmeter (set for twice system phase–to–phase voltage) between Transfer Switch terminals NA and EA.
2. Manually start generator. Voltmeter needle should sweep back and forth at a regular rate between 0 and about twice system voltage.
3. Press and hold TRANSFER SWITCH TEST button. The load should transfer to emergency source when meter needle is near 0 volts. If transfer does not occur, Motor Load Transfer feature is not operating.
4. Release the **Transfer Switch Test** button. The load should retransfer back to the normal source after the *Retransfer to Normal Delay*, if used. The retransfer should occur when the needle is near 0 volts. If retransfer does not occur after the time delay, the Motor Load Transfer feature is not operating.
5. For immediate retransfer, press the BYPASS TIME DELAY button. Then disconnect the voltmeter.

If the problem is isolated to circuits on the controller or the transfer switch, call your local ASCO Power Technologies sales office. Furnish Serial No., Bill of Material (BOM) No., & Catalog No. from the transfer switch nameplate.

SECTION 4 ADJUSTMENTS

Time Delay Adjustment

Standard time delays are set to customer specifications (if none specified, standard factory settings are used).

To change a setting, follow procedure on page 4-2. Use Table 4-1 as a guide to time delay values and their corresponding adjustment DIP switch or potentiometer.

Table 4-1. Time Delay Settings

DESCRIPTION	LABELS	FACTORY SETTING	ADJUSTMENT RANGE	S3 DIP SWITCH		ADJUSTMENT POTENTIOMETER
Override Momentary Normal Source Outages	TD ES	3 seconds	1 second	Actuator 1 on		—
			3 seconds	Actuator 1 off		
Transfer to Emergency	TIMER N/E	0 minutes (full ccw)	0 to 5 minutes	—	—	P2
Override Momentary Emergency S. Outages	—	4 seconds	non-adjustable	—	—	—
Retransfer to Normal	TIMER E/N	30 minutes (full cw)	1 second to 30 minutes	—	—	P1
Unloaded Running (Engine Cooldown)	—	5 minutes	non-adjustable	—	—	—

Sensor Adjustments

Voltage and frequency sensor pickup and dropout points are set to customer specifications (if none specified, standard factory settings are used). To change a setting, follow procedure on page 4–2. Use Tables 4-2 and 4–3 for settings and corresponding DIP switch actuators.

⚠ WARNING

Any change in these settings may affect the normal operation of the automatic transfer switch. This change could allow the load circuits to remain connected to a low voltage source.

Table 4-2. Voltage and Frequency Settings. (☐ Shaded DIP switches are standard factory settings).

DESCRIPTION	LABELS	SETTING	% of nominal		S1 DIP SWITCH	
			FACT. SET	ADJ RANGE		
Normal Source Voltage	PU / N	Pickup	90 %	95 % *	Actuator 3 off	
				90 %	Actuator 3 on	
	DO / N	Dropout	85 %	90 % *	Actuator 1 off Actuator 2 off	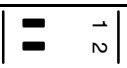
				85 %	Actuator 1 on Actuator 2 off	
				80 %	Actuator 1 off Actuator 2 on	
				70 %	Actuator 1 on Actuator 2 on	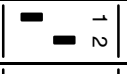
Emergency Source Voltage	– –	Pickup	90 %	non-adjustable	– –	
	– –	Dropout	75 %	non-adjustable		
Emergency Source Frequency	– –	Pickup	95 %	non-adjustable	– –	
	– –	Dropout	85 %	non-adjustable		
	60 / 50 Hz	60 / 50 Hz	60 Hz	60 Hz	Actuator 4 off	
				50 Hz	Actuator 4 on	
Voltage Phases	3 Ø , 1 Ø	3 Ø / 1 Ø	3 Ø	3 phase	Actuator 6 off	
				1 phase	Actuator 6 on	

* If dropout voltage is set to 90%, the pickup voltage must be set to 95%.

Table 4-3. Transformer Voltage Adjust.
(Low setting shifts all voltage settings down 4.2%; for example, 240 V to 230 V, or 480 V to 460 V)

DESCRIPTION	LABELS	FACTORY SETTING	ADJUSTMENT	S3 DIP SWITCH	
Voltage Adjust (4.2%)	LOW / HI	HI	LOW	Actuator 2 off	
			HI	Actuator 2 on	

⚠ WARNING

Do not make any setting changes while the controller is energized.

How to Change a Setting

1. Prevent the transfer switch from operating by disconnecting one source first, then the other, as follows:
   a. If the transfer switch is in the Normal position, open the emergency source circuit breaker. Turn the engine starting control to *off*. Then open the normal source circuit breaker.
   b. If the transfer switch is in the Emergency position, open the normal source circuit breaker. Turn engine starting control to *test* or *run*. Then open the emergency source circuit breaker.
2. Disconnect both harness plugs from controller by squeezing the latches. Do not pull on the wires.
3. Remove cover from the controller by releasing latch on right side with your thumb. See Figure 4-1.
4. Locate the appropriate adjustment potentiometer or DIP switch for the setting that you want to change. Refer to Table 4-1 and Table 4–2 on page 4-1 and Figure 4-2, Figure 4–3, Figure 4–4 on page 4–2.
5. Use a small screwdriver to turn the potentiometer clockwise to increase the time delay or counterclockwise to decrease it. See Figure 4-3.
6. Use a ball-point pen (or similar pointed tool) to slide the switch actuators left or right so they match the illustration next to the setting (left = off, right = on). Recheck the setting. See Figure 4-4.
7. Install the cover on the controller by hooking it on the left side and latching the right side.
8. Reconnect both harness plugs to the controller by aligning and pressing straight in until latches click.

⚠ WARNING

Close the enclosure door.

9. Close the enclosure door, then restore both sources:
   a. If the transfer switch is in the Normal position first close the normal source circuit breaker, then close the emergency source circuit breaker.
   b. If the transfer switch is in the Emergency position, close the normal source circuit breaker. The load will be automatically retransferred to the normal source. Then close the emergency source circuit breaker.
10. Turn the engine starting control to *automatic*.

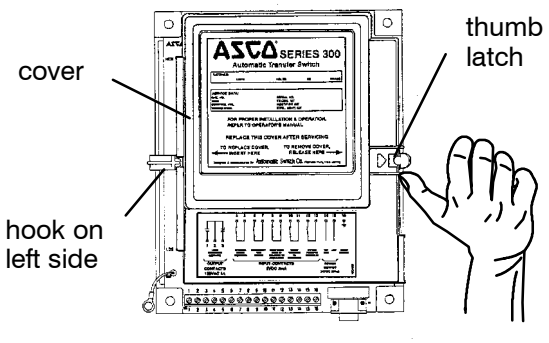

Figure 4-1. Controller cover latch.

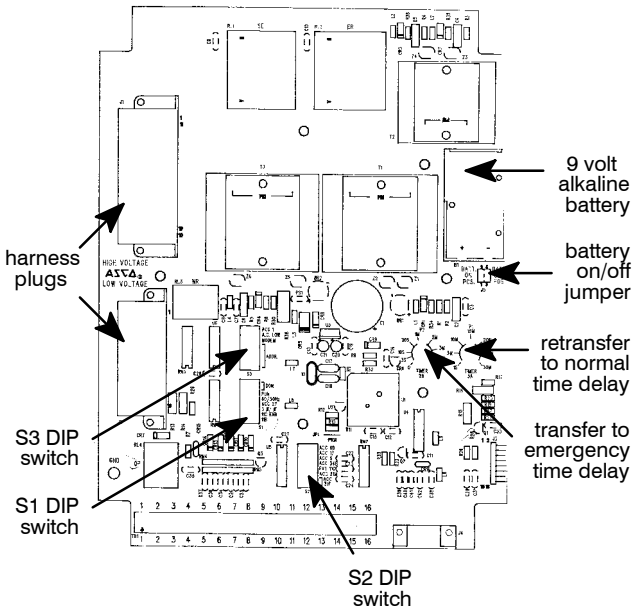

Figure 4-2. Location of potentiometers.

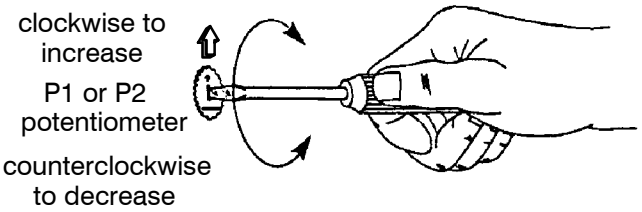

Figure 4-3. Changing time delay potentiometers.

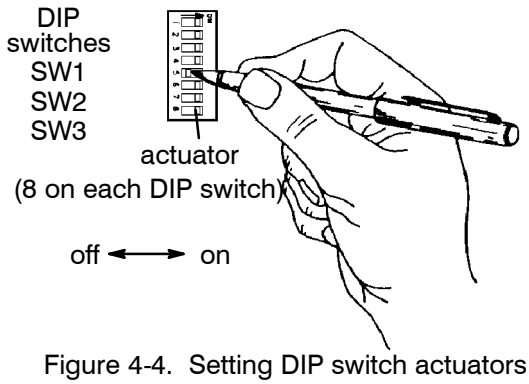

Figure 4-4. Setting DIP switch actuators.

SECTION 5 CONTROL FEATURES – ENGINE EXERCISERS

These timers periodically exercise the emergency engine-generator plant. They can be set to exercise with or without load transfer, or they can be completely disabled. The engine-generator should be exercised under load once a week for a minimum time period of 20 minutes, or follow the recommendations of the engine-generator set manufacturer. Refer to page 4–2 for location of DIP switches, battery (provided), and jumper block in the controller.

BUILT–IN ENGINE EXERCISER

The engine exerciser included in ASCO Series 300 Automatic Transfer Switches provides a once a week 20–minute exercise period. It occurs immediately when the SET ENGINE EXERCISER push button is pressed (and held for at least 5 seconds), and then at the same time weekly thereafter. A 9 volt alkaline battery (*Duracell*® MN1604, *Everready*® 522, or *Panasonic*® 6AM6) is furnished and installed in the controller to maintain the setting. The battery jumper block must be shifted to the ON position. See Figure 4–2 on page 4–2.

Fill in day and time set. Week Day _____ Time _____.

DIP Switch Settings

FUNCTION	S1 DIP SWITCH		S2 DIP SWITCH	
Std. Timer Enabled	Actuator 7 on	7	Actuator 5 on	5
Std. Timer Disabled	Actuator 7 off	7	Actuator 5 on	5
Exercise without Load	Actuator 8 off	8		
Exercise with Load	Actuator 8 on	8		

Shaded DIP switches are standard factory settings.

Press to cancel an active exercise period (stops generator).

If *Exercise with Load* is set, retransfers load to Normal, then stops generator after 5 min. cooldown.

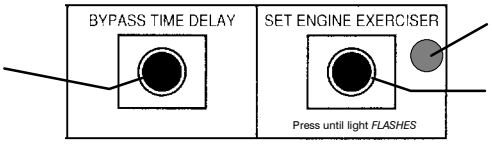

status light

Press and hold for 5 sec. or until status light blinks rapidly to set exercise period immediately and every week hereafter (generator starts).

If *Exerciser with Load* is set, transfers load to Emergency.

Figure 5-1. Operator panel pushbuttons and light.

Select below either *Exercise without Load* or *Exercise with Load* according to the setting of DIP switch S1, actuator 8. The load transfers from the Normal source to Emergency source (generator) and back again if *Exercise with Load* is selected.

Exercise without Load, DIP Switch S1, Actuator 8 off (8) — How to Set Built–In Timer

Step	Push Button	Status Light	Function	Explanation
1	*SET ENGINE EXERCISER* hold 5 sec.	blinks rapidly ●○●○●○	set exercise period	Exercise the generator now and every week at this time hereafter.
2	release	blinks slowly ●○○●○○	exercise period now active	Generator starts and runs.
3	press *BYPASS TIME DELAY*	● stays on	cancel active exercise period	Generator stops.
4	—	● stays on	generator off	Exerciser enabled; repeats every 7 days.

Exercise with Load, DIP Switch S1, Actuator 8 on (8) — How to Set Built–In Timer

Step	Push Button	Status Light	Function	Explanation
1	*SET ENGINE EXERCISER* hold 5 sec.	blinks rapidly ●○●○●○	set exercise period	Exercise the generator now and every week at this time hereafter.
2	release	blinks slowly ●○○●○○	exercise period now active	Generator starts and runs; the load transfers to Emergency.
3	press *BYPASS TIME DELAY*	blinks slowly ●○○●○○	cancel active exercise period	The load retransfers to Normal; then generator runs for 5 minute cooldown (light blinks slowly during cooldown).
4	—	● stays on	generator off	Exerciser enabled; repeats every 7 days.

NOTE: Every time *SET ENGINE EXERCISER* push button is pressed (held 5 seconds) the exercise period is changed.

OPTIONAL PROGRAMMABLE ENGINE EXERCISER (Accessory 11CD)

The optional programmable engine exerciser provides seven days of different exercise periods. The timer is connected and mounted below the controller. A permanent backup battery maintains the setting; when power is lost to timer, output switch deenergizes.

DIP Switch Settings

FUNCTION	S1 DIP SWITCH		S2 DIP SWITCH	
Opt. Timer Enabled	Actuator 7 off		Actuator 5 off	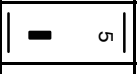
Opt. Timer Disabled	Actuator 7 off		Actuator 5 on	
Exercise without Load	Actuator 8 off			
Exercise with Load	Actuator 8 on	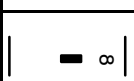		

Shaded DIP switches are standard factory settings.

The Accessory 11CD Programmable Engine Exerciser incorporates a 7 day time base, and therefore, each day of the week can be uniquely programmed to test the engine generator set either with or without load. The proper controller settings must be made to determine whether or not the test will be conducted with or without load (refer to page 5–1 for proper selection). For convenience, Block Programming is also provided, whereby up to seven days can be grouped together if the *ON* and *OFF* times are the same.

See next page for instructions on setting the timer. ☞

How to Set Optional Programmable Engine Exerciser (Accessory 11CD)

⚠ WARNING

Proceed with care!
The automatic transfer switch is energized.

Setting the Clock (Time and Day)

Step	Press Button	Display	Meaning
1	**reset**	1234567 (blink) 00 00 ⊙ ○	after self-test, clears memory
2 ↓ Note	hold **h**, then press **±1h**	1 2 3 4 5 6 7 AM 12 00 ⊙ ○	military 24 hr or AM/PM 12 hr time
	Repeat step 2 to toggle between military (blank display) and AM/PM time.		
3	hold ⊙ (clock symbol)	1234567 (blink) 00 00 ⊙ ○	hold ⊙ while setting thru step 7
4	**±1h** once (if Daylight Saving Time)	±1h	do nothing if it is Standard Time.
5	**h** (hold for fast count)	[00] 00	hour
6	**m** (hold for fast count)	00 [00]	minute
7	**Day**	Mo Tu We Th Fr Sa Su	day
8	release ⊙	: blinking	time & date set, clock starts

Programming Engine On-Off Period(s)

Step	Press Button	Display	Meaning
1	**Prog.** (do not hold)	1 2 3 4 5 6 7 — : —	begin
2	**hand**	⊙	on
3	**h**	start hour	start engine
4	**m**	start minute	
5	**Day**	start day	
Note	Successive pressing displays blocks of days: Mon–Sat, Mon–Fri, Sat & Sun (1 is Monday)		
6	**Prog.**	1 2 3 4 5 6 7 — : —	begin
7	Press **hand** (2 times)	○	off
8	**h**	stop hour	stop engine
9	**m**	stop minute	
10	**Day**	stop day	
11	⊙	: blinking	program set

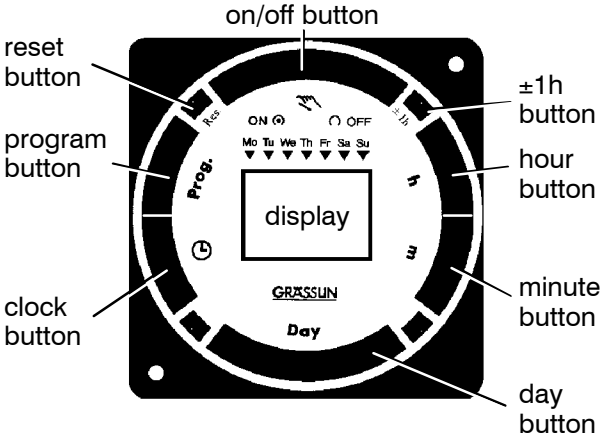

Figure 5-2. Exerciser display and push buttons

Changing or Checking Time Programs

By operating the *Prog.* button, the individual commands as programmed can, at any time, be brought consecutively into the display for revision or checking. Revisions are accomplished by programming over the existing programs using the steps at the left.

Canceling Time Programs

After the selecting the desired program, use the *h* and *m* buttons to set hours and minutes to zero; the —:— will be displayed. This program has been made ineffective and will no longer be carried out. To cancel all programs, press the *Res. (reset)* button. This clears all memory including the time base and program storage.

Manual Override

⚠ WARNING

Do not manually override the exerciser unless you are sure that the controller has been set for exercise without load (see page 5–2). Failure to do so could result in possible injury if the transfer switch operates while the enclosure door is open.

Step	Press Button	Display	Meaning
1	**hand**	⊙ hand	on
2	**hand**	[⊙]	permanent on
3	**hand**	[○]	permanent off
4	**hand**	⊙ ○	back to automatic

Daylight Savings / Standard Time Change

To change to Daylight Savings time, press the ±*1h* button once. Clock advances by one hour and **+1h** appears in display. To change to Standard Time, press the ±*1h* button again; the clock sets back one hour and **+1h** disappears.

CONTROL FEATURES *(continued)*

INPHASE MONITOR FOR MOTOR LOAD TRANSFER

Inphase monitoring logic controls transfer and retransfer of motor loads, so that inrush currents do not exceed normal starting currents. It avoids nuisance tripping of circuit breakers and mechanical damage to motor couplings.

The Motor Load Transfer feature is built into the controller. DIP switch S1 (actuator 5) activates this feature: right = ON, left = OFF.

FUNCTION	S1 DIP SWITCH	
enable	Actuator 5 on	
disable	Actuator 5 off	

☐ Shaded DIP switches are standard factory settings.

Note

If the Motor Load Transfer feature is enabled, it will be activated following the Load Disconnect Feature Delay Before Transfer delay.

LOAD DISCONNECT FEATURE

Connect external circuits to the terminals indicated on the Wiring Diagram provided with the ATS.

The double throw (Form C) contact is rated for 28 VDC or 120 VAC (5 amps resistive). The contact operates prior to a selectable 0, 3, 10, or 20 second delay before transfer of the Automatic Transfer Switch. The contact resets either immediately following transfer or after the same delay as set for pre–signal before transfer.

Time delay between the load disconnect control signal and initiation of transfer is set on the controller with DIP switch S2 (actuators 6, 7, 8) as shown below:

Delay Before Transfer

LD TDBT	S2 DIP SWITCH	
0 (disable)	Actuator 7 on Actuator 8 on	
3 seconds	Actuator 7 on Actuator 8 off	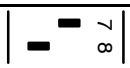
10 seconds	Actuator 7 off Actuator 8 on	
20 seconds	Actuator 7 off Actuator 8 off	

☐ Shaded DIP switches are standard factory settings.

Delay After Transfer*

LD TDAT	S2 DIP SWITCH	
enable	Actuator 6 on	
disable	Actuator 6 off	

*Enabling the Delay After Transfer will cause the control signal to reset after the same delay as set for the Delay Before Transfer.

REMOTE CONTROL FEATURES

These remote control features require a customer–supplied normally closed contact suitable for a 5 V dc low energy circuit. Refer to the Wiring Diagram provided with the ATS. Activate appropriate DIP switch S2 actuators below.

Remote Test (terminals CP6–7)

RTSW	S2 DIP SWITCH	
disable	Actuator 3 on	
enable	Actuator 3 off	

Remote Transfer to Emergency (CP8–9)

RT /E	S2 DIP SWITCH	
disable	Actuator 2 on	
enable	Actuator 2 off	

Bypass Transfer Time Delay (CP12–13)

TD E/N BYP.	S2 DIP SWITCH	
disable	Actuator 1 on	
enable	Actuator 1 off	

Inhibit Transfer to Emergency (CP10–11)

N/E INHIB.	S2 DIP SWITCH	
disable	Actuator 4 on	
enable	Actuator 4 off	

OPTIONAL STRIP HEATER (Accessory 44)

Accessory 44 Strip Heater is designed to keep ambient temperatures within the Automatic Transfer Switch enclosure at acceptable levels. This accessory consists of a mounting bracket with strip heater, thermostat, and terminal block. A transformer with fuses is included when the power for the assembly is derived from voltages above 120 V ac. The 120 V ac customer powered assembly does not include a transformer. This optional accessory is available factory installed or in kit form.

Turn the thermostat's dial to required setting as shown.

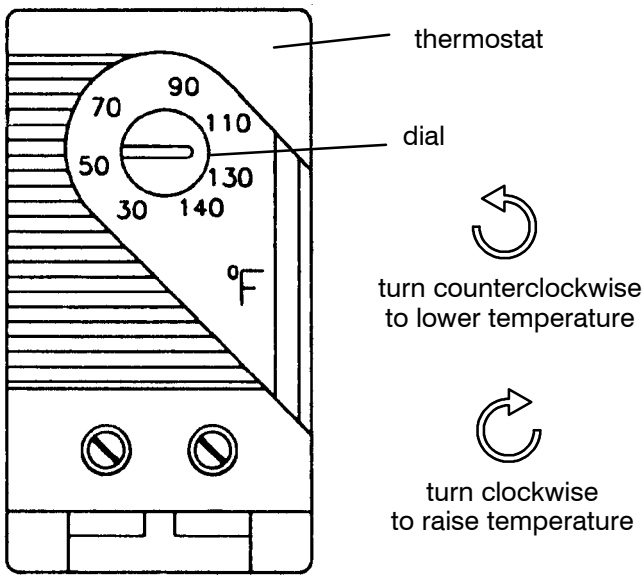

AVAILABLE KITS FROM ASCO

Controls

Description	Accessory	Kit
Programmable Engine Exerciser	11CD	K601111
Serial Communication Module	72A	K601110

Strip Heater – Accessory 44

Description	Accessory	Kit
120 volt customer supplied voltage (without transformer)	44A	K613127–001
208 – 480 volt ATS derived voltage (with transformer)	44G	K613127–002
380 volt ATS derived voltage (with transformer)	44G	K613127
550 – 600 volt ATS derived voltage (with transformer)	44G	K613127–003

INDEX

A

accessories, 5–2, 5–3, 5–4, 5–5

auxiliary circuits, 1–2

B

barriers, 1–3

battery, 4–2, 5–1

buttons, push, 3–1

bypass time delay, 1–4, 2–1, 3–1

C

cable
  lugs, 1–1
  preparation, 1–1
  spacers, 1–1
    illustration of, 1–1

catalog number, inside cover

cleaning, 3–1

connections
  engine control contact, 1–2
  line, 1–1

conact position indicators, 1–3

control features, 5–1
  load disconnect, 5–4
  motor load transfer, 5–4
  plant exerciser, 5–1

controller (control panel), 4–1, 4–2
  codes, cover
  cover removal, 4–2
  disconnecting, 3–1
  time delay potentiometers, 4–2

D

DIP Switches, 4–1, 4–2, 5–1, 5–2, 5–4

E

electrical operation, 1–4

engine exerciser, 5–1, 5–2, 5–3

engine starting contacts, 1–2

F

failure
  see trouble-shooting, 3–2

features, *see* control features

frequency, pickup and dropout settings, 4–1

functiona testl, 1–3, 1–4, 1–5

H

harness, 1–2
  disconnect plugs, 3–1

I

inphase monitor, 5–4

inspection, 3–1

installation, 1–1

insulator backing piece, 1–1
  illustration of, 1–1
  warning, 1–1

L

labels,
  engine starting contacts, 1–2
  inputs / outputs, 1–2
  rating, cover

lights, 1–4, 5–1

load disconnect feature, 5–4

lubrication, 3–1

M

maintenance, preventive, 3–1

manual load transfer, 3–2
  warning, 3–2

manual operation, 1–3
  illustration of, 1–3
  warning, 1–3

motor load transfer feature, 5–3

N

nameplate, cover

O

operation
  electrical, 1–4
  manual, 1–3
    illustration of, 1–3
    warning, 1–3
  sequence of, 2–1

P

parts, 3–1

problem, 3–2

programmable engine exerciser, 5–2, 5–3

R

rating label, inside cover

remote control features, 5–4
  bypass transfer time delay, 5–4
  inhibit transfer to emergency, 5–4
  remote test, 5–4
  remote transfer to emergency, 5–4

replacement parts, 3–1

S

set engine exerciser, 5–1

settings
  changing, 4–1
  factory, 4–1
  frequency, 4–1
  phase, 4–1
  time delay, 4–1
  voltage, 4–1

T

terminal block, 1–2

test, functional, 1–3, 1–4, 1–5

time delay
  adjustment, 4–1
  gen–set cooldown, 4–1
  how to change, 4–2
  override momentary outages, 4–1
  settings, 4–1
  transfer to emergency, 4–1
  transfer to normal, 4–1

timer (plant exerciser), how to set, 5–1

transfer switch test, 1–4, 3–1

trouble–shooting, 3–2
  inphase monitor, 5–4

V

voltage, phase, 4–1

voltage, pickup and dropout settings, 4–1

Printed in U.S.A.

© 2001 ASCO Power Technologies, L.P.

Operator's Manual

ASCO® Series 300 Automatic Transfer Switches H design 600 through 1200 amps

TABLE OF CONTENTS

	section
INSTALLATION	1
SEQUENCE OF OPERATION	2
TESTING & SERVICE	3
ADJUSTMENTS	4
CONTROL FEATURES	5
INDEX	back cover

⚠ DANGER

DANGER is used in this manual to warn of high voltages capable of causing shock, burns, or death.

⚠ WARNING

WARNING is used in this manual to warn of possible personal injury.

⚠ CAUTION

CAUTION is used in this manual to warn of possible equipment damage.

Refer to the outline and wiring drawings provided with ASCO Series 300 ATS for all installation details.

An experienced licensed electrician must install the ATS.



600, 800, 1000 amp. sizes



1200 amp. size

ASCO POWER TECHNOLOGIES L.P. 50 Hanover Road, Florham Park, New Jersey 07932–1591 USA
telephone 1 800 937–2726 (ASCO), for service call 1 800 800–2726 (ASCO) www.asco.com

381333–201 C

ASCO POWER TECHNOLOGIES CANADA PO Box 1238, 17 Airport Road, Brantford, Ontario, Canada N3T 5T3
telephone 519 758–8450, fax 519 758–0876, for service call 1 888 234–2726 (ASCO) www.asco.ca

Nameplate

The Transfer Switch nameplate includes data for each specific ASCO Series 300 ATS. Use the ATS only within the limits shown on this nameplate.

Catalog Number Identification

A typical Catalog Number is shown below with its elements explained. The example is for a Series 300 ATS with switched neutral, 3 pole, 600 amp, 480 V, in a Type 1 enclosure:

H 300 B 3 600 N 1 C

Neutral	Phase Poles	Amperes	Voltage		Controller	Enclosure
B – switched	2 – single Ø	600	C 208	L 440	1 – standard	C – type 1
C – overlapping	3 – three Ø	800	D 220	M 460	1X – if accessories ordered	F – type 3R
blank – solid		1000	E 230	N 480		G – type 4 *
		1200	F 240	P 550		L – type 12 *
			H 380	Q 575		blank – open type
			J 400	R 600		
			K 415			

* available 600 – 1000 amp. sizes only

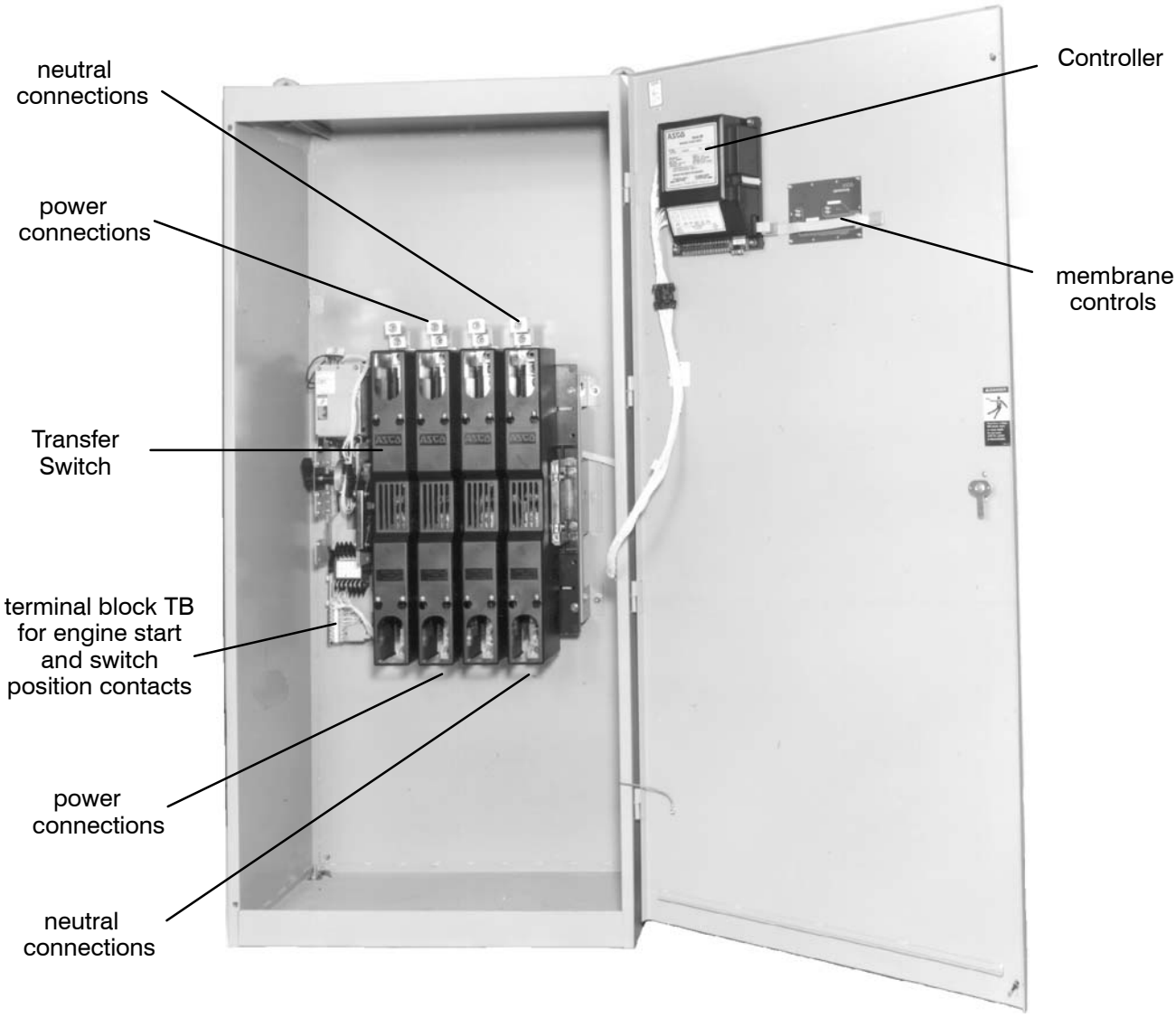

600 amp. size in typical enclosure with location of customer connections

ASCO Series 300 Automatic Transfer Switches (ATSs) are Listed under Underwriters Laboratories UL 1008 Standard for Safety for Automatic Transfer Switches. All control features are UL Component Recognized, which assures that ASCO automatic transfer switches meet OSHA Safety Requirements and will be acceptable to electrical inspectors.

ASCO Series 300 Automatic Transfer Switches are suitable for emergency and standby system applications. They meet emergency system rating requirements as defined in National Electrical Code (NEC) Article 700 and UL 1008. Also, they are suitable for the requirements of NEC Article 517 – Health Care Facilities, NEC Article 701 – Legally Required Standby Systems, NEC Article 702 – Optional Standby Systems, NFPA 99 Health Care Facilities, and NFPA 110 Emergency and Standby Power Systems.

Rating Label

Each automatic transfer switch contains a rating label to define the loads and fault circuit withstand / closing ratings. Refer to the label on the transfer switch for specific values.

⚠ WARNING

Do not exceed the values on the rating label. Exceeding the rating can cause personal injury or serious equipment damage.

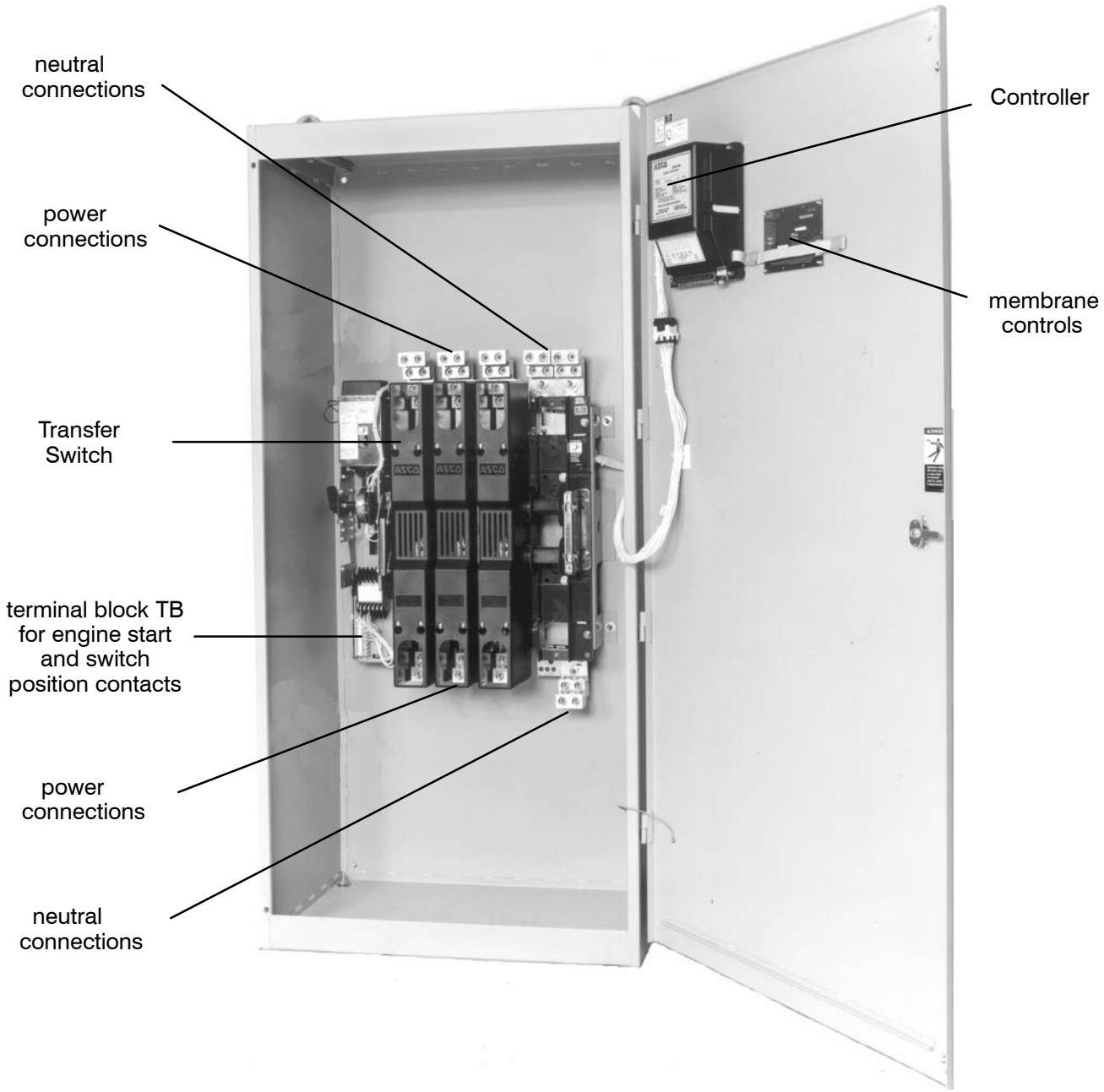

800 and 1000 amp. size in typical enclosure with location of customer connections

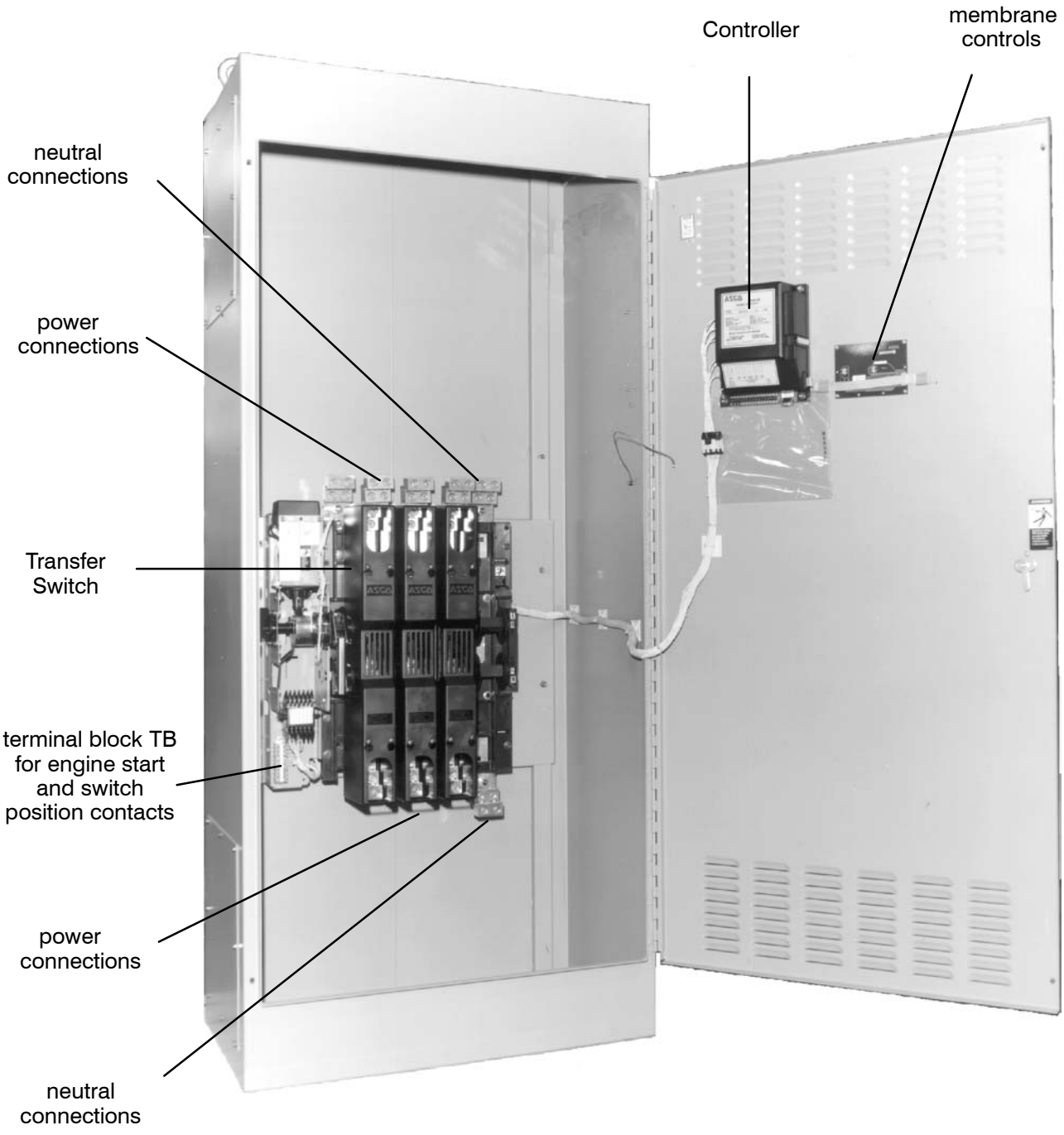

1200 amp. size in typical enclosure with location of customer connections

SECTION 1 INSTALLATION

Series 300 Automatic Transfer Switches are factory wired and tested. Installation requires skid removal then securing the enclosure to the supporting foundation.

Remove the Shipping Skid

Open the front door and remove the four lag screws (2 in front, 2 in rear) securing enclosure to the wood skid.

Supporting Foundation

The supporting foundation for the enclosure must be level and straight. Refer to the applicable enclosure outline drawing included with the Series 300 for all mounting details including door opening space.

If bottom cable entry is used, the foundation must be prepared so that the conduit stubs are located correctly. Refer to the enclosure outline drawing for specified area and location. Provide cable bending space and clearance to live metal parts. When a concrete floor is poured, use interlocking conduit spacer caps or a wood or metal template to maintain proper conduit alignment.

Mounting

Refer to the applicable enclosure outline drawing furnished with this switch and mount the Series 300 according to details and instructions shown on diagram.

Line Connections

Refer to the Wiring Diagram provided with your Series 300 ATS. All wiring must be made in accordance with the National Electrical Code and local codes.

It is unnecessary to remove pole covers from the transfer switch. If you do remove them, reinstall them carefully.

⚠ DANGER

De–energize the conductors before making any line or auxiliary circuitry connections. Be sure that Normal and Emergency line connections are in proper phase rotation. Place engine generator starting control in the OFF position. Make sure engine generator is not in operation.

Testing Power Conductors

Do not connect the power conductors to the ASCO Series 300 transfer switch until they are tested. Installing power cables in conduit, cable troughs and ceiling-suspended hangers often requires considerable force. The pulling of cables can damage insulation and stretch or break the conductor's strands. For this reason, after the cables are pulled into position, and before they are connected, they should be tested to verify that they are not defective or have been damaged during installation.

⚠ CAUTION

Protect the automatic transfer switch from construction grit and metal chips to prevent malfunction or shortened life of the ATS.

Connecting Power Conductors

After the power cables have been tested, connect them to the appropriate terminal lugs on the transfer switch as shown on the wiring diagram provided with this Series 300. Make sure the lugs provided are suitable for use with the cables being installed. Standard terminal lugs are solderless screw type and will accept the wire sizes listed on the drawings provided with the Series 300. Be careful when stripping insulation from the cables; avoid nicking or ringing the conductor. Remove surface oxides from cables by cleaning with a wire brush. When aluminum cable is used, apply joint compound to conductors. Tighten cable lugs to the torque specified on rating label.

Controller Ground

A grounding wire must be connected to the controller's lower left mounting stud. Because the controller is mounted on the enclosure door, a conductive strap must be used between the enclosure and the door. This connection provides proper grounding which does not rely upon the door hinges.

Harnesses

The transfer switch is connected to the left side of the controller by a plug–in harness (two plugs).

Engine Starting Contacts

Customer connections for engine control contact and TS auxiliary contacts connections are located on terminal block TB which is mounted on the front lower left of the transfer switch. Refer to wiring diagram provided with the Series 300 ATS and connect the engine start wires to the appropriate terminals. See Figure 1–1 and Table A.

Table A. Engine start connections.

When normal source fails	Terminals on transfer switch
contact closes	TB1 and TB2
contact opens	TB1 and TB3

Auxiliary Circuits

Connect auxiliary circuit wires to appropriate terminals on transfer switch terminal block TB as shown on the wiring diagram provided with this Series 300 Automatic Transfer Switch. Make the necessary auxiliary connections by referring to **Section 5, Control Features**.

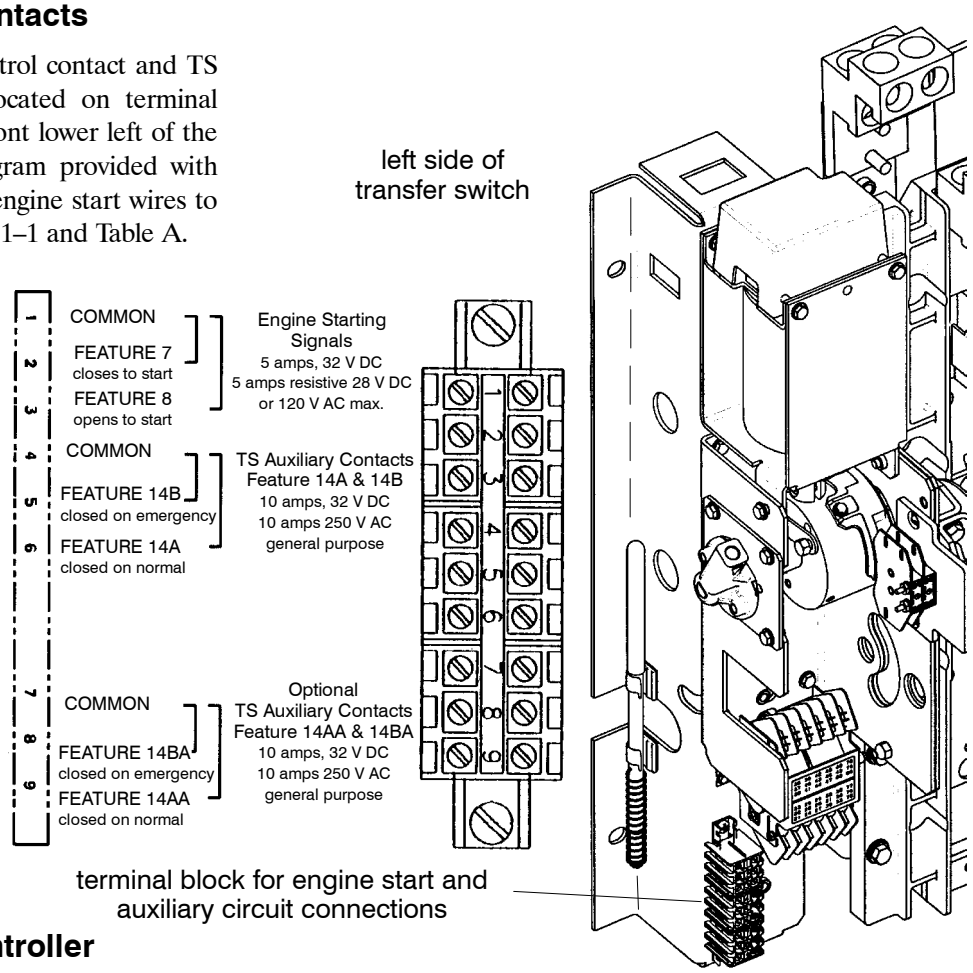

Figure 1-1. Engine start and auxiliary circuit terminal block TB located on the transfer switch.

Connections to Controller for other Control Features

(located on bottom of Controller)

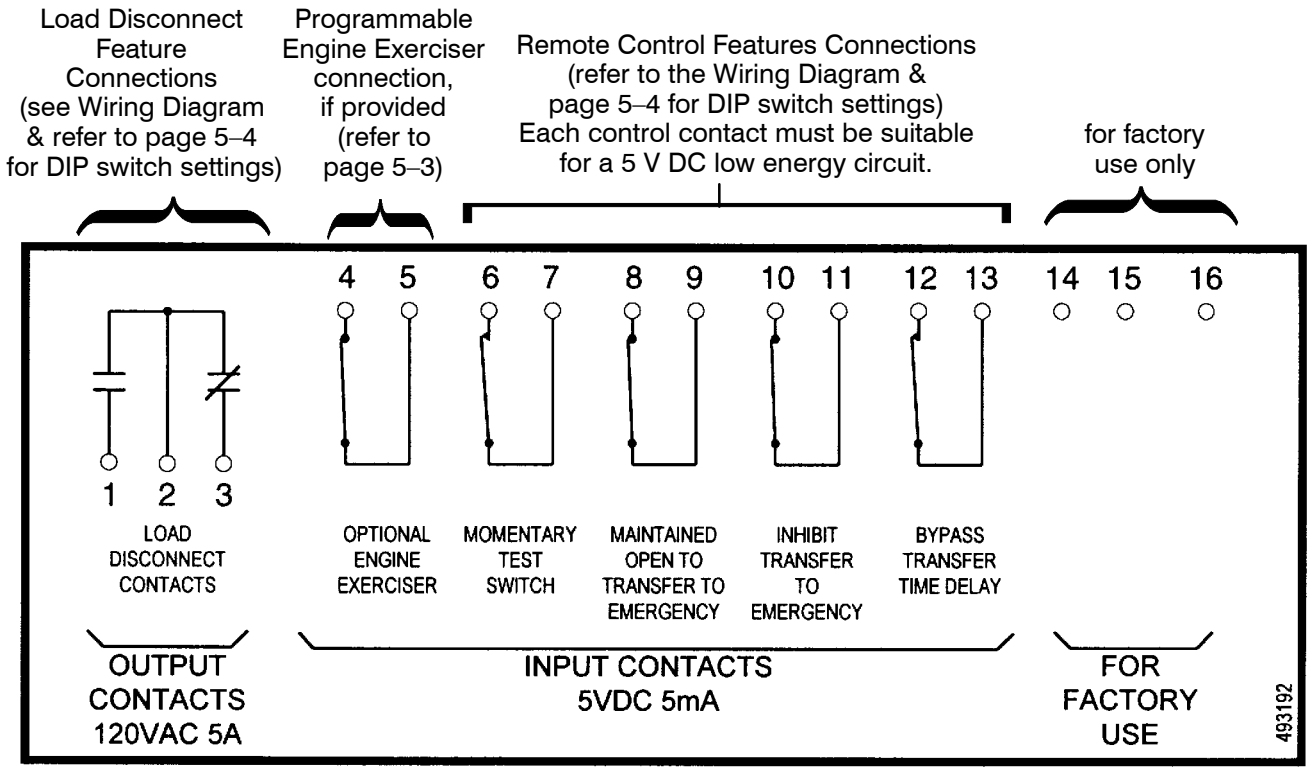

Figure 1-2. Input / output label on the Controller showing possible connections to the lower terminal block.

Functional Test

The Functional Test consists of three checks: manual operation, voltage checks, and electrical operation.

⚠ CAUTION

Do these checks in the order presented to avoid damaging the automatic transfer switch.

Read all instructions on the Wiring Diagram and labels affixed to the automatic transfer switch. Note the control features that are provided and review their operation before proceeding.

1 – Manual Operation Test

A detachable maintenance handle is provided on the frame of the Transfer Switch for maintenance purposes only. Manual operation of the transfer switch should be checked before it is energized (operated electrically).

⚠ WARNING

Do not manually operate the transfer switch until both power sources are disconnected: open both circuit breakers.

1. After deenergizing both power sources, open the enclosure door. Locate and remove the maintenance handle from the clips on the left side of the transfer switch frame. Insert the handle into the hole in the molded hub on the left side of the operator. See Figures 1–3 and 1–4 and Table B.
2. Move the maintenance handle up or down as shown to manually operate the transfer switch. It should operate smoothly without any binding. If it does not, check for shipping damage or construction debris.

Table B. Maintenance handle positions.

ATS Position		Handle	Indicators
Normal	E N	up	E = O upper contacts open N = C lower contacts closed
Emergency	E N	down	E = C upper contacts closed N = O lower contacts open

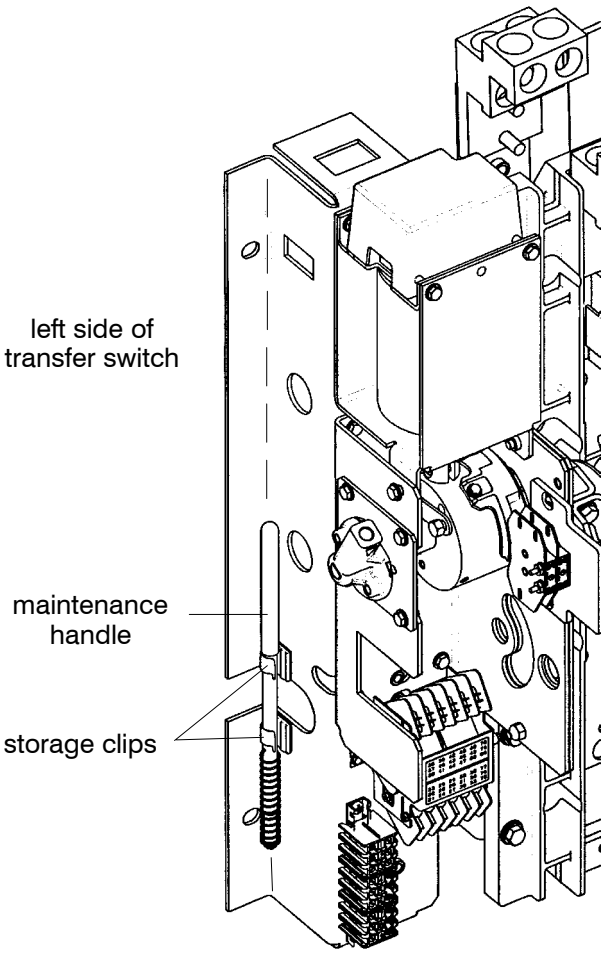

Figure 1-3. Maintenance handle and its storage clips.

3. Return the transfer switch to the Normal position. Observe that the window indicators (right side) show the top shaft O (open) and the bottom shaft C (closed).

Note: If Normal and Emergency connections are reversed this operation is also reversed.

4. Remove the maintenance handle and store it on the frame (left side) in the clips provided.

⚠ WARNING

Verify that the maintenance handle has been removed before proceeding!

Now continue to **2 – Voltage Checks** on next page.

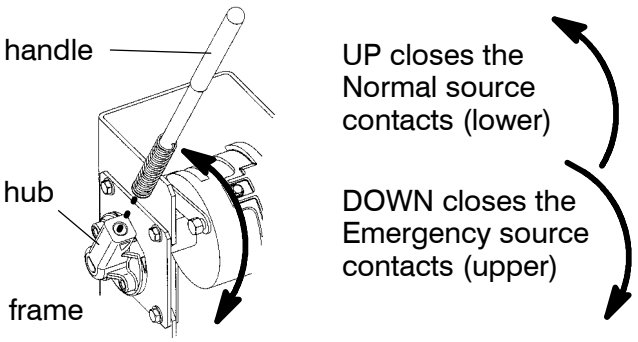

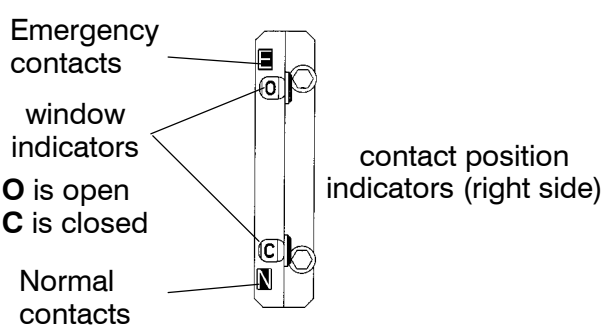

Figure 1-4. Maintenance handle operation and contact position indicators.

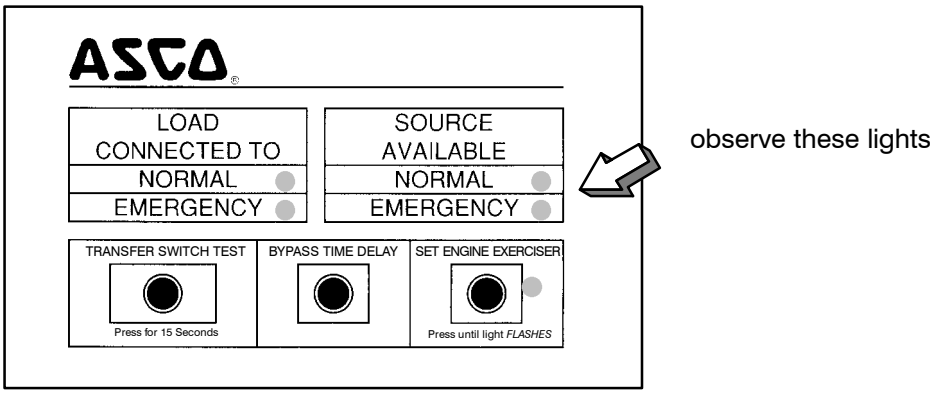

Figure 1–5. Standard controls and indicators.

2 – Voltage Checks

First check nameplate on transfer switch; rated voltage must be the same as normal and emergency line voltages.

⚠ CAUTION

Verify that the feeders have been connected to the proper lugs.

⚠ DANGER

Use extreme caution when using a meter to measure voltages in the following steps. Do not touch power terminals; shock, burns, or death could result !

Perform steps 1 through 6 at the right. Observe the status lights. See Figure 1–5.

- ● Black circle means light is on.
- ❍ White circle means light is off.

* If necessary, adjust voltage regulator on the generator according to the manufacturer's recommendations. The Automatic Transfer Switch will respond only to the rated voltage specified on the Transfer Switch nameplate.

1	Close the normal source circuit breaker. The *Transfer Switch Connected To Normal* and the *Normal Source Available* lights should come on.	SOURCE AVAILABLE NORMAL ● EMERGENCY ❍
2	Use an accurate voltmeter to check phase to phase and phase to neutral voltages present at the transfer switch normal source terminals.	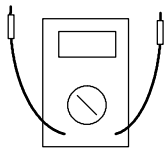
3	Close the emergency source circuit breaker. (Start generator, if necessary.) The *Transfer Switch Connected To Normal* and the *Emergency Source Available* lights should come on.	SOURCE AVAILABLE NORMAL ❍ EMERGENCY ●
4	Use an accurate voltmeter to check phase to phase and phase to neutral voltages present at the transfer switch emergency source terminals.*	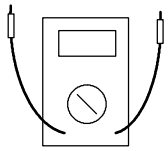
5	Use a phase rotation meter to check phase rotation of emergency source; it must be the same as the normal source.	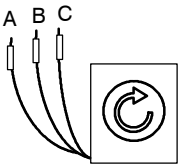
6	Shut down the engine–generator, if applicable. The *Emergency Source Accepted* light should go off. Then put the starting control selector switch (on the generator set) in the *automatic* position. Close enclosure door.	SOURCE AVAILABLE NORMAL ❍ EMERGENCY ❍

Now continue to **3 – Electrical Operation** on next page.

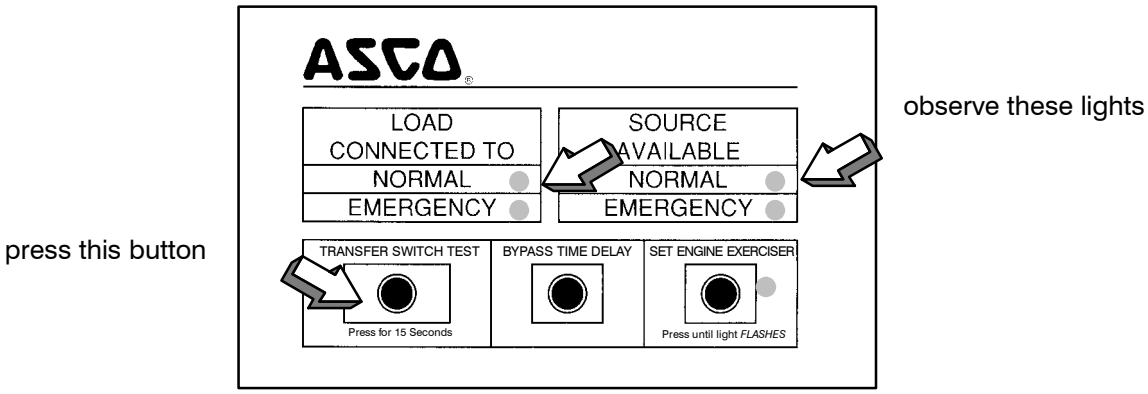

Figure 1–6. Standard controls and indicators.

3 – Electrical Operation

First check nameplate on transfer switch; rated voltage must be the same as normal and emergency line voltages.

⚠ CAUTION

Verify that the feeders have been connected to the proper lugs.

⚠ DANGER

Use extreme caution when using a meter to measure voltages in the following steps. Do not touch power terminals; shock, burns, or death could result !

Perform steps 1 through 8 at the right. Observe the status lights. See Figure 1–6.

- ● Black circle means light is on.
- ❍ White circle means light is off.

NOTE: If Motor Load Transfer feature is activated, then transfer may not occur immediately after the respective time delays. Transfer will only occur when the phase relationship between sources is correct.

This completes the Functional Test of the ASCO Series 300 Automatic Transfer Switch. Leave the engine–generator starting control in the *automatic* position.

1	The normal source must be available and the generator must be ready to start. Check that the *Normal Source Available* light is on.	SOURCE AVAILABLE NORMAL ● EMERGENCY ○
2	Press and hold the *Transfer Switch Test* button until the engine starts and runs. This should happen within 15 sec.	TRANSFER SWITCH TEST
3	The *Emergency Source Available* light should come on.	SOURCE AVAILABLE NORMAL ● EMERGENCY ●
4	The transfer switch should transfer to the Emergency position. The *Load Connected to Emergency* light should come on and the *Load Connected to Normal* light should go off.	LOAD CONNECTED TO NORMAL ○ EMERGENCY ●
5	If the *transfer to emergency delay* is used the transfer should occurs after a time delay (up to 5 minutes). For immediate transfer press the *Bypass Time Delay* button.	BYPASS TIME DELAY
6	The transfer switch should transfer back to the Normal position. The *Load Connected to Normal* light should come on and the *Load Connected to Emergency* light should go off.	LOAD CONNECTED TO NORMAL ● EMERGENCY ○
7	If the *retransfer to normal delay* is used the retransfer should occur after a time delay (up to 30 minutes). For immediate retransfer press the *Bypass Time Delay* button.	BYPASS TIME DELAY
8	The *unloaded running delay* keeps the generator running for 5 minutes (cool–down period). Then the generator should stop and the *Emergency Source Available* light should go off.	SOURCE AVAILABLE NORMAL ● EMERGENCY ○

SECTION 2 SEQUENCE OF OPERATION

Transfer To Emergency

The sequence for load transfer to emergency source begins automatically when normal source voltage falls below the preset dropout point or when *Transfer Switch Test* button is pressed. An under voltage condition on any phase of the normal source is detected by the sensor.

When the normal source voltage fails or the *Transfer Switch Test* button is pressed, the SE relay de-energizes and relay NR begins its timing cycle (1 or 3 seconds, *momentary normal source outage delay*). The NR relay is provided with a time delay on dropout to override momentary outages and prevent nuisance starting of the engine-driven generator. If the normal source voltage returns above the sensor dropout setting before the time delay expires, the NR relay timing cycle is reset to zero and relay SE energizes.

If the normal source voltage does not return above the sensor dropout setting before the time delay expires, the NR relay de-energizes and signals the engine-driven generator to start. At the same time, a voltage and frequency sensor begins monitoring the emergency source. The sensor will accept the emergency source only when both voltage and frequency reach preset pickup points. Usually about ten seconds elapse from dropout of the NR relay to acceptance by the sensor. This time span occurs because the engine-driven generator must crank, start, and run up to nominal pickup points. For this reason, if the *Transfer Switch Test* button is pressed it must be held for 15 seconds. If the emergency source is available immediately, the sensor may accept it as soon as NR relay drops out.

When the emergency source is accepted by the sensor, relay ER begins its timing cycle (*transfer to emergency delay*). ER relay is provided with an adjustable (0 to 5 minutes) time delay on pickup to delay transfer of the load to the emergency source. For immediate transfer press *Bypass Time Delay* button.

ER relay energizes, the TS coil is energized, the transfer switch operates, and all switch contacts (mains, controls, auxiliaries) reverse position. The transfer switch is now supplying the load from the emergency source.

The transfer switch will remain in the Emergency position until the normal source is restored. If the *Transfer Switch Test* button is used, the transfer switch will remain on emergency until the *retransfer to normal delay* times out.

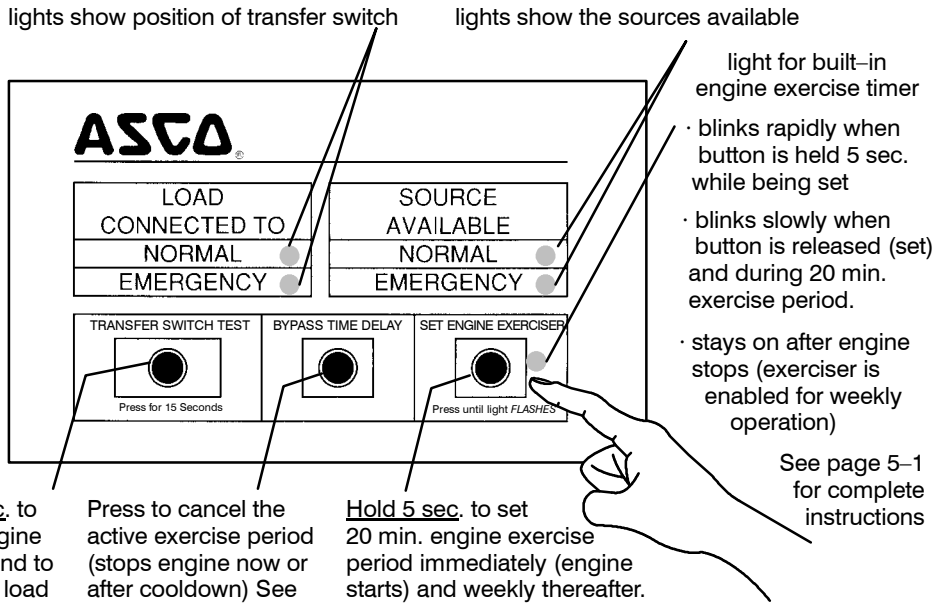

Figure 2–1. Membrane controls and indicator lights.

Retransfer to Normal

The sequence for load retransfer to the normal source automatically begins when the voltage sensor detects restoration of the normal source. The voltage level must rise above the preset pickup point on all phases before the sensor will accept the normal source.

When the normal source is accepted by the sensor, relay SE begins its timing cycle (adjustable 1 sec. to 30 min., *retransfer to normal delay*). For immediate retransfer press *Bypass Time Delay* button. SE relay is provided with a time delay on pickup to prevent immediate load retransfer to the normal source. The delay insures that the normal source has stabilized before reconnection of vital loads. If the normal source voltage falls below the present dropout point before the time delay expires, the timing cycle is reset to zero. If the emergency source fails for more than 4 seconds during the timing cycle, ER relay drops out and the load is immediately retransferred to the normal source, if that source is acceptable.

SE relay energizes and ER relay is dropped out. The TS coil is energized, the transfer switch operates, and all switch contacts (mains, controls, auxiliaries) reverse position. The transfer switch is now supplying the load from the normal source again.

Upon retransfer to the normal source, NR relay begins its timing cycle (*unloaded running delay [engine cooldown]*). NR relay is provided with a 5 minute time delay on pickup to keep the engine running for a cool-down period.

NR relay energizes after the time delay and signals the engine-driven generator to shut down. All circuits are reset for any future normal source failure.

Activation of standard control features shown in Section 5 will alter the sequence of operation and introduce additional time delays during transfer operations.

Katolight Service - Master Repair Manual - Page 3826

SECTION 3 TESTING & SERVICE

PREVENTIVE MAINTENANCE

Reasonable care in preventive maintenance will insure high reliability and long life for the automatic transfer switch.

Operate the switch at least once a month. Perform this four step Electrical Operation Test. This is a test with load transfer.

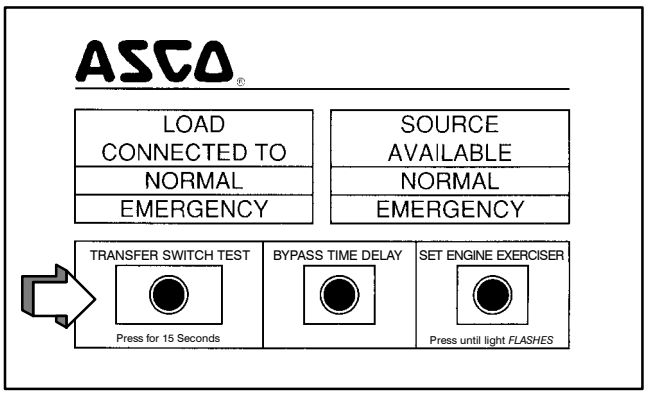

Transfer Switch Test

1.	Press and hold the door-mounted *TRANSFER SWITCH TEST* button until the engine starts and runs. This should happen within 15 seconds.
2.	The transfer switch will operate to the Emergency position. If the *Transfer To Emergency Delay* is used, the transfer will occur after a time delay (up to 5 minutes). For immediate transfer press *BYPASS TIME DELAY* button.
3.	The Transfer Switch will operate back to the Normal position after the *Retransfer To Normal Delay* (up to 30 minutes). For immediate retransfer press *BYPASS TIME DELAY* button.
4.	*Unloaded Running (Engine Cooldown) Delay* allows engine to run unloaded for 5 minutes.

Clean and inspect the switch once a year. De-energize all sources, then brush and vacuum away any excessive dust accumulation. Remove the transfer switch barriers and check contact condition. Replace contacts when pitted or worn excessively. Reinstall the barriers carefully.

Maintain transfer switch lubrication. The transfer switch has been properly lubricated, and under normal operating conditions no further lubricating is required. Renew factory lubrication if the switch is subjected to severe dust or abnormal operating conditions. Relubricate the operator if TS coil is replaced. Order ***lubrication kit 75-100***.

Replacement parts. Replacement parts are available in kit form. When ordering parts provide the Serial No. and Catalog No. from the transfer switch nameplate. Contact your local ASCO Power Technologies sales office or ASI. In the United States call 1–800–800–ASCO (2726), or in Canada call 1–888–234–ASCO (2726).

DISCONNECTING THE CONTROLLER

The harness disconnect plugs are furnished for repair purposes only and should not have to be unplugged. If the controller must be isolated, follow these steps carefully.

Disconnecting the Plugs

⚠ WARNING

Do not unplug the controller until step 1a. or 1b. below is completed.

1. Observe the position of the transfer switch.
   a. If the transfer switch is in the *Normal* position, place standby engine starting control in the *off* position. Then open the emergency source circuit breaker.
   b. If the transfer switch is in the *Emergency* position, open the normal source circuit breaker. Place the engine starting control in the *test* or *run* position.
2. Separate the quick disconnect plugs by squeezing the latches. Do not pull on the harness wires.
3. Label, remove, and tape the signal wires connected to the engine start terminals on the transfer switch: TB1 and TB3, or TB1 and TB2.

Reconnecting the Plugs

⚠ WARNING

Do not reconnect the controller until step 1a. or 1b. and 2 below are completed.

1. Observe the position of the transfer switch.
   a. If the transfer switch is in the *Normal* position, be sure that the standby engine starting control is still in the *off* position. The emergency source circuit breaker still should be open.
   b. If the transfer switch is in the *Emergency* position, normal source circuit breaker still should be open.
2. Reconnect the signal wires connected to the appropriate engine start terminals on the transfer switch. See **Section 1**, *Engine Starting Contacts*.
3. The harness plugs and sockets are keyed. Carefully align the plugs with the sockets and press straight in until both latches click.
4. Restore the opposite source as follows:
   a. If the transfer switch is in the *Normal* position, place the standby engine starting control in the *automatic* position. Then close the emergency source circuit breaker.
   b. If the transfer switch is in the *Emergency* position, close the normal source circuit breaker. The load will be automatically retransferred to the normal source after the *Retransfer to Normal Delay*. For immediate retransfer, press *BYPASS TIME DELAY* button. Place the engine starting control in the *automatic* position.

Katolight Service - Master Repair Manual - Page 3827

MANUAL LOAD TRANSFER

This procedure will manually transfer the load if the controller is disconnected.

⚠ WARNING

Do not manually operate the transfer switch until both power sources are disconnected: open both circuit breakers.

1. Open normal and emergency source circuit breakers.
2. Use the maintenance handle to manually operate transfer switch to the opposite source. See page 1–3, *Manual Operation Test*.
3. If the transfer switch is in the Emergency position manually start the engine generator and then close the emergency source circuit breaker.

TROUBLE-SHOOTING

Note the control features that are activated or furnished on the switch and review their operation. Refer to **Section 5**, **Control Features**.

⚠ WARNING

Proceed with care!
The automatic transfer switch is energized.

Table 3-1. Trouble-Shooting Checks.

PROBLEM	CHECK IN NUMERICAL SEQUENCE		
	1 OPERATION	2 GEN-SET	3 VOLTAGE
Gen-Set does not start when the *TRANSFER SWITCH TEST* button is pressed and held for 15 seconds or when the normal source fails.	Hold the *TRANSFER SWITCH TEST* button 15 sec. or the outage must be long enough to allow for the 1 or 3 sec. *Momentary Normal Source Outage Delay* plus engine cranking and starting time.	Starting control must be in automatic position. Batteries must be charged and connected. Check wiring to engine starting contacts.	—
Transfer switch does not transfer the load to emergency source after the gen-set starts.	Wait for *Transfer to Emergency Delay* (0 to 5 min.) to time out. For immediate transfer, press the *BYPASS TIME DELAY* button. If Motor Load Transfer is active, wait for in-phase condition (see below).	Generator output circuit breaker must be closed. Generator frequency must be at least 57 Hz.	Voltmeter should read at least 90% of nominal phase to phase voltage between transfer switch terminals EA and EC (or EL1 and EL2 for 2 pole switches). * * These are factory settings.
Transfer switch does not transfer the load to normal source when normal returns or when *TRANSFER SWITCH TEST* button is released.	Wait for *Retransfer to Normal Delay* (1 sec. to 30 min.) to time out. For immediate re–transfer, press *BYPASS TIME DELAY* button. If Motor Load Transfer is active, wait for in-phase condition (see below).	—	Voltmeter should read at least 90% of nominal phase to phase voltage between transfer switch terminals NB and NC, NC and NA, and NA and NB (or NL1 and NL2 for 2 pole switches).
Gen-Set does not stop after load retransfer to the normal source.	Wait for the 5 minute *Unloaded Running Delay* to time out.	Starting control must be in automatic position.	—

Trouble-Shooting the Motor Load Transfer Feature (refer to page 5–3)

⚠ DANGER

Use extreme caution when using a meter to measure voltages in the following steps. Do not touch power terminals; shock, burns, or death could result !

1. Connect a voltmeter (set for twice system phase–to–phase voltage) between Transfer Switch terminals NA and EA.
2. Manually start generator. Voltmeter needle should sweep back and forth at a regular rate between 0 and about twice system voltage.
3. Press and hold TRANSFER SWITCH TEST button. The load should transfer to emergency source when meter needle is near 0 volts. If transfer does not occur, Motor Load Transfer feature is not operating.
4. Release the **Transfer Switch Test** button. The load should retransfer back to the normal source after the *Retransfer to Normal Delay*, if used. The retransfer should occur when the needle is near 0 volts. If retransfer does not occur after the time delay, the Motor Load Transfer feature is not operating.
5. For immediate retransfer, press the BYPASS TIME DELAY button. Then disconnect the voltmeter.

If the problem is isolated to circuits on the controller or the transfer switch, call your local ASCO Power Technologies sales office or ASI. In the United States, call 1–800–800–2726. In Canada, call 1–888–234–2726. Furnish the Serial No., Bill of Material (BOM) No., & Catalog No. from transfer switch nameplate.

SECTION 4 ADJUSTMENTS

Time Delay Adjustment

Standard time delays are set to customer specifications (if none specified, standard factory settings are used).

To change a setting, follow procedure on page 4-2. Use Table 4-1 as a guide to time delay values and their corresponding adjustment DIP switch or potentiometer.

Table 4-1. Time Delay Settings

DESCRIPTION	LABELS	FACTORY SETTING	ADJUSTMENT RANGE	S3 DIP SWITCH		ADJUSTMENT POTENTIOMETER
Override Momentary Normal Source Outages	TD ES	3 seconds	1 second	Actuator 1 on		—
			3 seconds	Actuator 1 off		
Transfer to Emergency	TIMER N/E	0 minutes (full ccw)	0 to 5 minutes	—	—	P2
Override Momentary Emergency S. Outages	—	4 seconds	non-adjustable	—	—	—
Retransfer to Normal	TIMER E/N	30 minutes (full cw)	1 second to 30 minutes	—	—	P1
Unloaded Running (Engine Cooldown)	—	5 minutes	non-adjustable	—	—	—

Sensor Adjustments

Voltage and frequency sensor pickup and dropout points are set to customer specifications (if none specified, standard factory settings are used). To change a setting, follow procedure on page 4–2. Use Tables 4-2 and 4–3 for settings and corresponding DIP switch actuators.

⚠ WARNING

Any change in these settings may affect the normal operation of the automatic transfer switch. This change could allow the load circuits to remain connected to a low voltage source.

Table 4-2. Voltage and Frequency Settings. (☐ Shaded DIP switches are standard factory settings).

DESCRIPTION	LABELS	SETTING	% of nominal		S1 DIP SWITCH	
			FACT. SET	ADJ RANGE		
Normal Source Voltage	PU / N	Pickup	90 %	95 % *	Actuator 3 off	
				90 %	Actuator 3 on	
	DO / N	Dropout	85 %	90 % *	Actuator 1 off Actuator 2 off	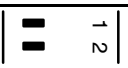
				85 %	Actuator 1 on Actuator 2 off	
				80 %	Actuator 1 off Actuator 2 on	
				70 %	Actuator 1 on Actuator 2 on	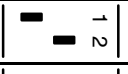
Emergency Source Voltage	– –	Pickup	90 %	non-adjustable	– –	
	– –	Dropout	75 %	non-adjustable		
Emergency Source Frequency	– –	Pickup	95 %	non-adjustable	– –	
	– –	Dropout	85 %	non-adjustable		
	60 / 50 Hz	60 / 50 Hz	60 Hz	60 Hz	Actuator 4 off	
				50 Hz	Actuator 4 on	
Voltage Phases	3 Ø , 1 Ø	3 Ø / 1 Ø	3 Ø	3 phase	Actuator 6 off	
				1 phase	Actuator 6 on	

* If dropout voltage is set to 90%, the pickup voltage must be set to 95%.

Table 4-3. Transformer Voltage Adjust.
(Low setting shifts all voltage settings down 4.2%; for example, 240 V to 230 V, or 480 V to 460 V)

DESCRIPTION	LABELS	FACTORY SETTING	ADJUSTMENT	S3 DIP SWITCH	
Voltage Adjust (4.2%)	LOW / HI	HI	LOW	Actuator 2 off	
			HI	Actuator 2 on	

⚠ WARNING

Do not make any setting changes while the controller is energized.

How to Change a Setting

1. Prevent the transfer switch from operating by disconnecting one source first, then the other, as follows:
   a. If the transfer switch is in the Normal position, open the emergency source circuit breaker. Turn the engine starting control to *off*. Then open the normal source circuit breaker.
   b. If the transfer switch is in the Emergency position, open the normal source circuit breaker. Turn engine starting control to *test* or *run*. Then open the emergency source circuit breaker.
2. Disconnect both harness plugs from controller by squeezing the latches. Do not pull on the wires.
3. Remove cover from the controller by releasing latch on right side with your thumb. See Figure 4-1.
4. Locate the appropriate adjustment potentiometer or DIP switch for the setting that you want to change. Refer to Table 4-1 and Table 4–2 on page 4-1 and Figure 4-2, Figure 4–3, Figure 4–4 on page 4–2.
5. Use a small screwdriver to turn the potentiometer clockwise to increase the time delay or counterclockwise to decrease it. See Figure 4-3.
6. Use a ball-point pen (or similar pointed tool) to slide the switch actuators left or right so they match the illustration next to the setting (left = off, right = on). Recheck the setting. See Figure 4-4.
7. Install the cover on the controller by hooking it on the left side and latching the right side.
8. Reconnect both harness plugs to the controller by aligning and pressing straight in until latches click.

⚠ WARNING

Close the enclosure door.

9. Close the enclosure door, then restore both sources:
   a. If the transfer switch is in the Normal position first close the normal source circuit breaker, then close the emergency source circuit breaker.
   b. If the transfer switch is in the Emergency position, close the normal source circuit breaker. The load will be automatically retransferred to the normal source. Then close the emergency source circuit breaker.
10. Turn the engine starting control to *automatic*.

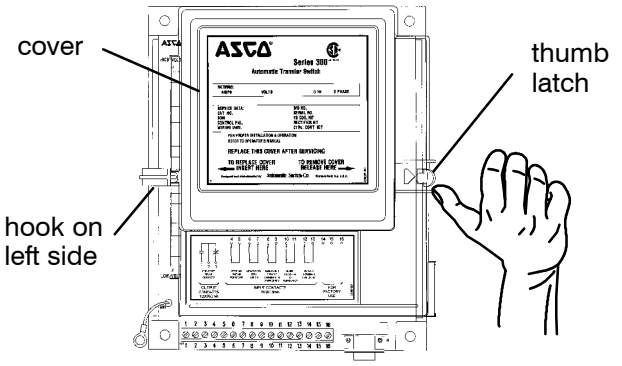

Figure 4-1. Controller cover latch.

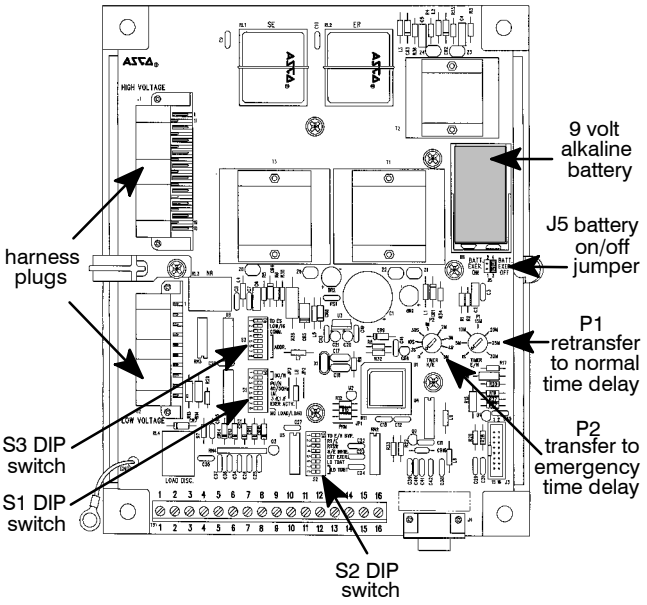

Figure 4-2. Location of potentiometers.

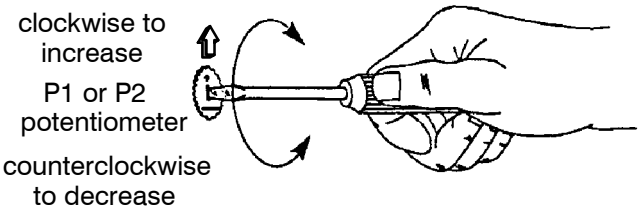

Figure 4-3. Changing time delay potentiometers.

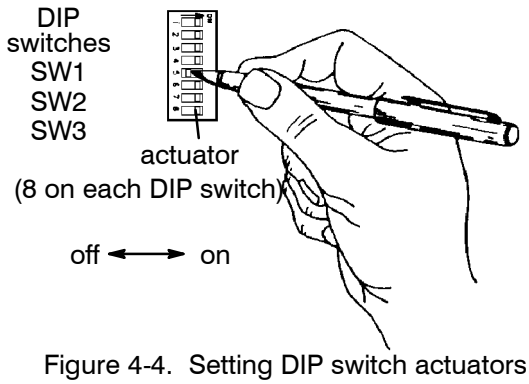

Figure 4-4. Setting DIP switch actuators.

SECTION 5 CONTROL FEATURES – ENGINE EXERCISERS

These timers periodically exercise the emergency engine-generator plant. They can be set to exercise with or without load transfer, or they can be completely disabled. The engine-generator should be exercised under load once a week for a minimum time period of 20 minutes, or follow the recommendations of the engine-generator set manufacturer. Refer to page 4–2 for location of DIP switches, battery (provided), and jumper block in the controller.

BUILT–IN ENGINE EXERCISER

The engine exerciser included in ASCO Series 300 Automatic Transfer Switches provides a once a week 20–minute exercise period. It occurs immediately when the SET ENGINE EXERCISER push button is pressed (and held for at least 5 seconds), and then at the same time weekly thereafter. A 9 volt alkaline battery (*Duracell*® MN1604, *Everready*® 522, or *Panasonic*® 6AM6) is furnished and installed in the controller to maintain the setting. The battery jumper block must be shifted to the ON position. See Figure 4–2 on page 4–2.

Fill in day and time set. Week Day _____ Time _____.

DIP Switch Settings

FUNCTION	S1 DIP SWITCH		S2 DIP SWITCH	
Std. Timer Enabled	Actuator 7 on	7	Actuator 5 on	5
Std. Timer Disabled	Actuator 7 off	7	Actuator 5 on	5
Exercise without Load	Actuator 8 off	8		
Exercise with Load	Actuator 8 on	8		

Shaded DIP switches are standard factory settings.

Press to cancel an active exercise period (stops generator).

If *Exercise with Load* is set, retransfers load to Normal, then stops generator after 5 min. cooldown.

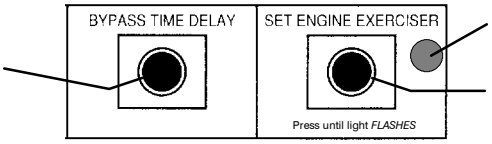

status light

Press and hold for 5 sec. or until status light blinks rapidly to set exercise period immediately and every week hereafter (generator starts).

If *Exerciser with Load* is set, transfers load to Emergency.

Figure 5-1. Operator panel pushbuttons and light.

Select below either *Exercise without Load* or *Exercise with Load* according to the setting of DIP switch S1, actuator 8. The load transfers from the Normal source to Emergency source (generator) and back again if *Exercise with Load* is selected.

Exercise without Load, DIP Switch S1, Actuator 8 off  How to Set Built–In Timer

Step	Push Button	Status Light	Function	Explanation
1	*SET ENGINE EXERCISER* hold 5 sec.	blinks rapidly ●○●○●○	set exercise period	Exercise the generator now and every week at this time hereafter.
2	release	blinks slowly ●○○●○○	exercise period now active	Generator starts and runs.
3	press *BYPASS TIME DELAY*	● stays on	cancel active exercise period	Generator stops.
4	—	● stays on	generator off	Exerciser enabled; repeats every 7 days.

Exercise with Load, DIP Switch S1, Actuator 8 on  How to Set Built–In Timer

Step	Push Button	Status Light	Function	Explanation
1	*SET ENGINE EXERCISER* hold 5 sec.	blinks rapidly ●○●○●○	set exercise period	Exercise the generator now and every week at this time hereafter.
2	release	blinks slowly ●○○●○○	exercise period now active	Generator starts and runs; the load transfers to Emergency.
3	press *BYPASS TIME DELAY*	blinks slowly ●○○●○○	cancel active exercise period	The load retransfers to Normal; then generator runs for 5 minute cooldown (light blinks slowly during cooldown).
4	—	● stays on	generator off	Exerciser enabled; repeats every 7 days.

NOTE: Every time *SET ENGINE EXERCISER* push button is pressed (held 5 seconds) the exercise period is changed.

Optional Accessory 11BG – SOURCE AVAILABILITY SIGNAL & PROGRAMMABLE ENGINE EXERCISER MODULE

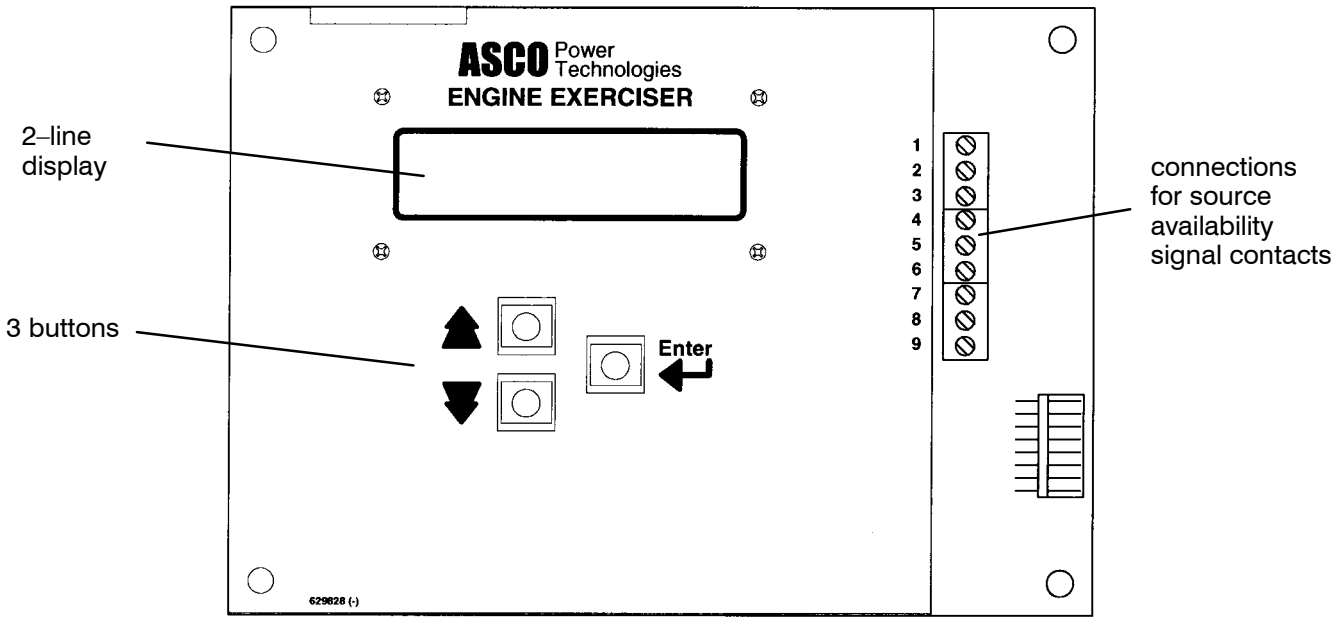

Figure 5–2. Accessory 11BG module (mounted behind operator interface and connected to the controller) includes source availability signal contacts and a programmable engine exerciser.

Source Availability Signal Contacts

The module provides one Form C contact each for the normal and emergency sources signal the acceptability of the source as sensed by the controller. The signal contacts operate in conjunction with the *Source Available* lights on the operator interface. Field wiring terminals are provided as shown in Figure 5–3 and the wiring diagram.

Contact ratings:

2 amps @ 30 Vdc, 0.5 amp. @ 125 Vac resistive

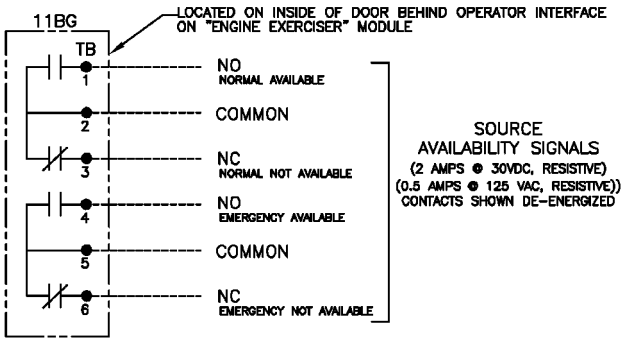

Figure 5–3. Source availability signal contacts.

Programmable Engine Exerciser

The module includes a programmable engine exerciser that provides for weekly or biweekly operation. This optional exercise timer may have to be turned on (enabled) by setting the S1 DIP switch actuator 7 to off, and S2 DIP switch actuator 5 to off. A backup battery in the controller (see page 4–2 and page 5–3) must be turned on to maintain the settings and to allow programming with the normal and emergency power turned off (page 5–1).

The programmable engine exerciser incorporates a 7 day or 14 day time base. Proper controller settings must be made to determine whether or not the test will be done with or without load transfer (S1 DIP switch actuator 8).

See next page for instructions on setting the timer.

DIP Switch Settings in the Controller

(see page 4–2)

FUNCTION	S1 DIP SWITCH		S2 DIP SWITCH	
Opt. Timer Enabled	Actuator 7 off		Actuator 5 off	
Opt. Timer Disabled	Actuator 7 off		Actuator 5 on	
Exercise without Load	Actuator 8 off			
Exercise with Load	Actuator 8 on			

Shaded DIP switches are standard factory settings.

How to Set Optional Programmable Engine Exerciser (part of Acc. 11BG module)

⚠ DANGER

Hazardous voltage capable of causing shock, burns, or death is used in this transfer switch. Deenergize both Normal & Emergency power sources before programming the exerciser.

Navigating the Menu

Use the UP and DOWN arrow keys to move through the displays.

Changing the Parameters

Use the UP and DOWN arrow keys to move though the displays to the parameter to be changed. Push the ENTER key to start the editing process. The first parameter will flash. Use the UP and DOWN arrow keys to adjust the parameter to the desired value and press the ENTER key to save the value. The next parameter will now flash. Repeat the process until each parameter is properly configured.

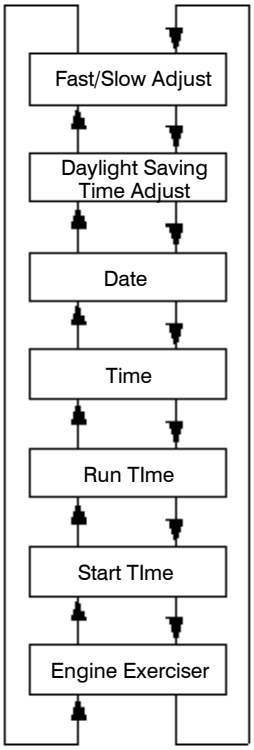

Engine Exerciser Display

The Engine Exerciser Display shows the status of the engine exerciser. When the unit is shipped from the factory the programmable engine exerciser is "Disabled" and must be set to "Enabled" by the customer. When the engine exerciser is running, this display will count down the remaining time until the end of the exercise period.

Start Time Display

The Start Time Display shows the engine exerciser start time. There are four parameters that determine the start time:

weekly ("Every") or bi–weekly ("Alt") operation
day of week ("Sun" through "Sat")
start hour (0 through 23)
start minutes (0 through 59)

For example, if the user wants the exerciser to run every other Saturday at 3 PM, the proper configuration would be:

"Alt Sat @ 15:00"

NOTE: When choosing bi–weekly operation, the exerciser will always run on the week designated "(1)" on the date display.

Run Time Display

The Run Time Display shows the run time for the engine exerciser. The default setting from the factory is 30 minutes.

Time Display

The Time Display shows the present system time. The format is "hours:minutes:seconds".

NOTE: During total power outages, power to the accessory is maintained by a battery in the Controller (see page 4–2). Be sure that the 9–volt alkaline battery is fresh and enabled (jumper in ON position) so that the time and date settings are not lost.

Date Display

The Date Display shows the present system date. The format is "day of week (week) month/day of month/year".

NOTE: Week is either week 1 or week 2. This is used in conjunction with the bi–weekly timer.

Daylight Savings Time Adjust Display

This display shows whether the automatic daylight saving time adjustment is active. The factory default is "NO". If enabled, the unit will automatically adjust for daylight saving time at 2 AM on the first Sunday of April and the last Sunday of October.

Fast / Slow Adjust Display

This display shows the automatic fast/slow adjustment value. The factory default is 0. This feature can be used to trim a clock that runs fast or slow. For example, if your clock runs 10 seconds slow per week, change the fast/slow adjust value to "+10" and the unit will automatically add 10 seconds to the clock every week.

NOTE: Adjustments are made Sunday morning at 2 AM. If you want your exerciser period to start at 2 AM on Sunday, you cannot use this feature and the adjustment must be set to 0.

Fill in your settings for future reference

Weekly or Bi–weekly	Day of Week	Start Time	Run Time
Every = weekly *Alt* = bi–weekly	*Sun* through *Sat*	*0 – 23* hour *0 – 59* minute	*0 – 23* hour *0 – 59* minute *30* min. is default setting

Date exerciser was set _____

CONTROL FEATURES *(continued)*

INPHASE MONITOR FOR MOTOR LOAD TRANSFER

Inphase monitoring logic controls transfer and retransfer of motor loads, so that inrush currents do not exceed normal starting currents. It avoids nuisance tripping of circuit breakers and mechanical damage to motor couplings.

The Motor Load Transfer feature is built into the controller. DIP switch S1 (actuator 5) activates this feature: right = ON, left = OFF.

FUNCTION	S1 DIP SWITCH	
enable	Actuator 5 on	
disable	Actuator 5 off	

☐ Shaded DIP switches are standard factory settings.

Note

If the Motor Load Transfer feature is enabled, it will be activated following the Load Disconnect Feature Delay Before Transfer delay.

LOAD DISCONNECT FEATURE

Connect external circuits to the terminals indicated on the Wiring Diagram provided with the ATS.

The double throw (Form C) contact is rated for 28 VDC or 120 VAC (5 amps resistive). The contact operates prior to a selectable 0, 3, 10, or 20 second delay before transfer of the Automatic Transfer Switch. The contact resets either immediately following transfer or after the same delay as set for pre–signal before transfer.

Time delay between the load disconnect control signal and initiation of transfer is set on the controller with DIP switch S2 (actuators 6, 7, 8) as shown below:

Delay Before Transfer

LD TDBT	S2 DIP SWITCH	
0 (disable)	Actuator 7 on Actuator 8 on	
3 seconds	Actuator 7 on Actuator 8 off	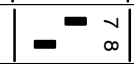
10 seconds	Actuator 7 off Actuator 8 on	
20 seconds	Actuator 7 off Actuator 8 off	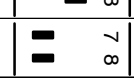

☐ Shaded DIP switches are standard factory settings.

Delay After Transfer*

LD TDAT	S2 DIP SWITCH	
enable	Actuator 6 on	
disable	Actuator 6 off	

*Enabling the Delay After Transfer will cause the control signal to reset after the same delay as set for the Delay Before Transfer.

REMOTE CONTROL FEATURES

These remote control features require a customer–supplied normally closed contact suitable for a 5 V dc low energy circuit. Refer to the Wiring Diagram provided with the ATS. Activate appropriate DIP switch S2 actuators below.

Remote Test (terminals CP6–7)

RTSW	S2 DIP SWITCH	
disable	Actuator 3 on	
enable	Actuator 3 off	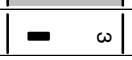

Remote Transfer to Emergency (CP8–9)

RT /E	S2 DIP SWITCH	
disable	Actuator 2 on	
enable	Actuator 2 off	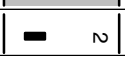

Bypass Transfer Time Delay (CP12–13)

TD E/N BYP.	S2 DIP SWITCH	
disable	Actuator 1 on	
enable	Actuator 1 off	

Inhibit Transfer to Emergency (CP10–11)

N/E INHIB.	S2 DIP SWITCH	
disable	Actuator 4 on	
enable	Actuator 4 off	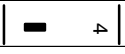

OPTIONAL STRIP HEATER (Accessory 44)

Accessory 44 Strip Heater is designed to keep ambient temperatures within the Automatic Transfer Switch enclosure at acceptable levels. This accessory consists of a mounting bracket with strip heater, thermostat, and terminal block. A transformer with fuses is included when the power for the assembly is derived from voltages above 120 V ac. The 120 V ac customer powered assembly does not include a transformer. This optional accessory is available factory installed or in kit form.

Turn the thermostat's dial to required setting as shown.

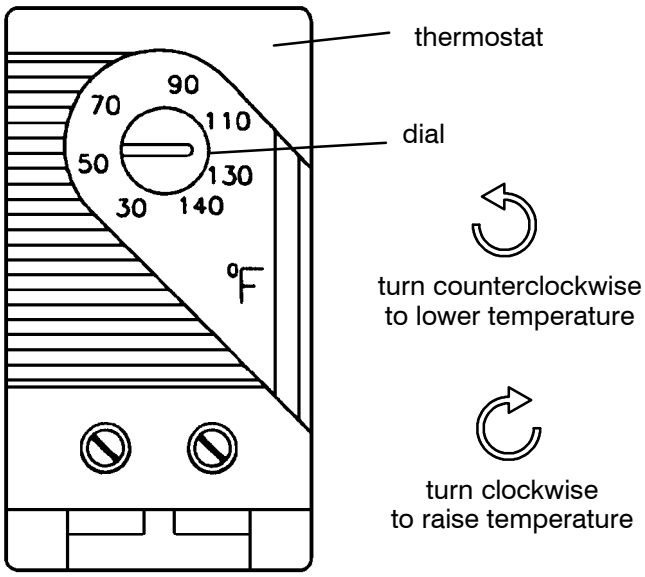

Figure 5–4. Thermostat.

AVAILABLE KITS FROM ASCO

Controls

Description	Accessory	Kit
Programmable Engine Exerciser & Source Availability Contacts	11BG	K629830
Serial Communication Module	72A	K601110

Strip Heater – Accessory 44

Description	Accessory	Kit
120 volt customer supplied voltage (without transformer)	44A	K613127–001
208 – 480 volt ATS derived voltage (with transformer)	44G	K613127–002
380 volt ATS derived voltage (with transformer)	44G	K613127
550 – 600 volt ATS derived voltage (with transformer)	44G	K613127–003

INDEX

A

accessories, *see* optional accessories

auxiliary circuits, 1–2

B

battery, 4–2, 5–1

buttons, push, 3–1

bypass time delay, 1–5, 2–1, 3–1

C

cable
  lugs, 1–1
  preparation, 1–1

catalog number, inside cover

cleaning, 3–1

connections
  engine control contact, 1–2
  line, 1–1

contact position indicators, 1–3

contacts
  auxiliary, 1–2
  engine control, 1–2
  main, 1–3, 3–1
  source availability signal, 5–2

control features, 5–1
  load disconnect, 5–4
  motor load transfer, 5–4
  plant exerciser, 5–1, 5–2, 5–3

controller, 4–1, 4–2
  codes, cover
  cover removal, 4–2
  disconnecting, 3–1
  time delay potentiometers, 4–2

D

DIP Switches, 4–1, 4–2, 5–1, 5–2, 5–4

E

electrical operation, 1–4

engine exerciser, 5–1, 5–2, 5–3

engine starting contacts, 1–2

F

features, *see* control features

frequency, pickup and dropout settings, 4–1

functional test, 1–3, 1–4, 1–5

G

ground, controller, 1–1

H

harness, 1–2
  disconnect plugs, 3–1

help, service 3–2

I

inphase monitor, 5–4

inspection, 3–1

installation, 1–1

L

labels,
  engine starting contacts, 1–2
  inputs / outputs, 1–2
  rating, cover

lights, 1–4, 5–1

load disconnect feature, 5–4

lubrication, 3–1

M

maintenance, preventive, 3–1

manual load transfer, 3–2
  warning, 3–2

manual operation, 1–3
  illustration of, 1–3
  warning, 1–3

motor load transfer feature, 5–4

N

nameplate, inside cover

O

operation
  electrical, 1–4
  manual, 1–3
    illustration of, 1–3
    warning, 1–3
  sequence of, 2–1

optional accessories
  programmable engine exerciser & source availability signal contacts, 5–2, 5–3
  serial communication module, 5–5
  strip heater, 5–5

P

parts, 3–1

problem, 3–2

programmable engine exerciser, 5–2, 5–3

R

rating label, inside cover

remote control features, 5–4
  bypass transfer time delay, 5–4
  inhibit transfer to emergency, 5–4
  remote test, 5–4
  remote transfer to emergency, 5–4

replacement parts, 3–1

S

service, call 800–800–2726 (ASCO)

set engine exerciser, 5–1, 5–2, 5–3

settings
  changing, 4–1
  factory, 4–1
  frequency, 4–1
  phase, 4–1
  time delay, 4–1
  voltage, 4–1

T

terminal block, 1–2

test, functional, 1–3, 1–4, 1–5

time delay
  adjustment, 4–1
  gen–set cooldown, 4–1
  how to change, 4–2
  override momentary outages, 4–1
  settings, 4–1
  transfer to emergency, 4–1
  transfer to normal, 4–1

timer (plant exerciser), how to set, 5–1, 5–2, 5–3

transfer switch test, 1–5, 3–1

trouble–shooting, 3–2

V

voltage, phase, 4–1

voltage, pickup and dropout settings, 4–1

Printed in U.S.A.

© ASCO Power Technologies, L.P. 2004

Operator's Manual

ASCO® 7000 Series ATS Automatic Transfer Switches

C–design 30–150A, E–design 260 & 400A, F–design 600 & 800A, G–design 1000–3000A, and F–design 3000 & 4000A

⚠ DANGER

DANGER is used in this manual to warn of high voltages capable of causing shock, burns, or death.

⚠ WARNING

WARNING is used in this manual to warn of possible personal injury.

⚠ CAUTION

CAUTION is used in this manual to warn of possible equipment damage.



G–design 1000–1200 amp. sizes

Refer to the outline and wiring drawings provided with your 7000 Series ATS for all installation and connection details and accessories.

Refer to *Group 5 Controller User's Guide* 381333–126 for ATS status display messages, time delays, pickup & dropout settings, and adjustments.

An experienced licensed electrician must install the ATS.

Rating Label

Each automatic transfer switch contains a rating label to define the loads and fault circuit withstand / closing ratings. Refer to the label on the transfer switch for specific values.

⚠ WARNING

Do not exceed the values on the rating label. Exceeding the rating can cause personal injury or serious equipment damage.

Nameplate

The Transfer Switch nameplate includes data for each specific 7000 Series ATS. Use the switch only within the limits shown on this nameplate. A typical Catalog Number is shown on the next page with its elements explained.

TABLE OF CONTENTS

section-page

INSTALLATION 1-1
Mounting and Line Connections 1-1
Auxiliary Circuits and Harness 1-2, 1-3
Engine Starting Contacts 1-3
Functional Test 1-3, 1-4, 1-5, 1-6

TESTING & SERVICE 2-1
Transfer Test 2-1
Preventive Maintenance 2-1
Disconnecting the Controller 2-1
Manual Load Transfer 2-2
Trouble-Shooting 2-2

INDEX . . . . . back cover

ASCO Power Technologies® 50 Hanover Road, Florham Park, New Jersey 07932–1591 USA
1 800 937–2726 (ASCO), for service call 1 800 800–2726 (ASCO) www.asco.com

381333–127 E

ASCO POWER TECHNOLOGIES CANADA PO Box 1238, 17 Airport Road, Brantford, Ontario, Canada N3T 5T3
telephone 519 758–8450, fax 519 758–0876, for service call 1 888 234–2726 (ASCO) www.asco.ca

EMERSON Network Power

Katolight Service - Master Repair Manual - Page 3837

Catalog Number Indentification

Typical 7000 Series catalog no. for G–design solid neutral, 3 pole, 1200 amp, 480 V, ATS in Type 1 enclosure:

G	7ATS	A	3	1200	N	5	C

design prefix letter

Neutral	Phase Poles	Amperes		Voltage		Controller	Enclosure
A – solid	2 – single Ø	30	800	A 115	J 400	5 – standard	C – type 1
B – switched	3 – three Ø	70	1000	B 120	K 415	5X – if accessories ordered	F – type 3R
C – overlapping		100	1200	C 208	L 440		G – type 4
blank – none		150	1600	D 220	M 460		L – type 12
		260	2000	E 230	N 480		M –type 3R secure
		400	3000	F 240	P 550		N –type 4 secure
		600	4000	G 277	Q 575		P –type 4X secure
				H 380	R 600		Q –type 12 secure
							blank – open type

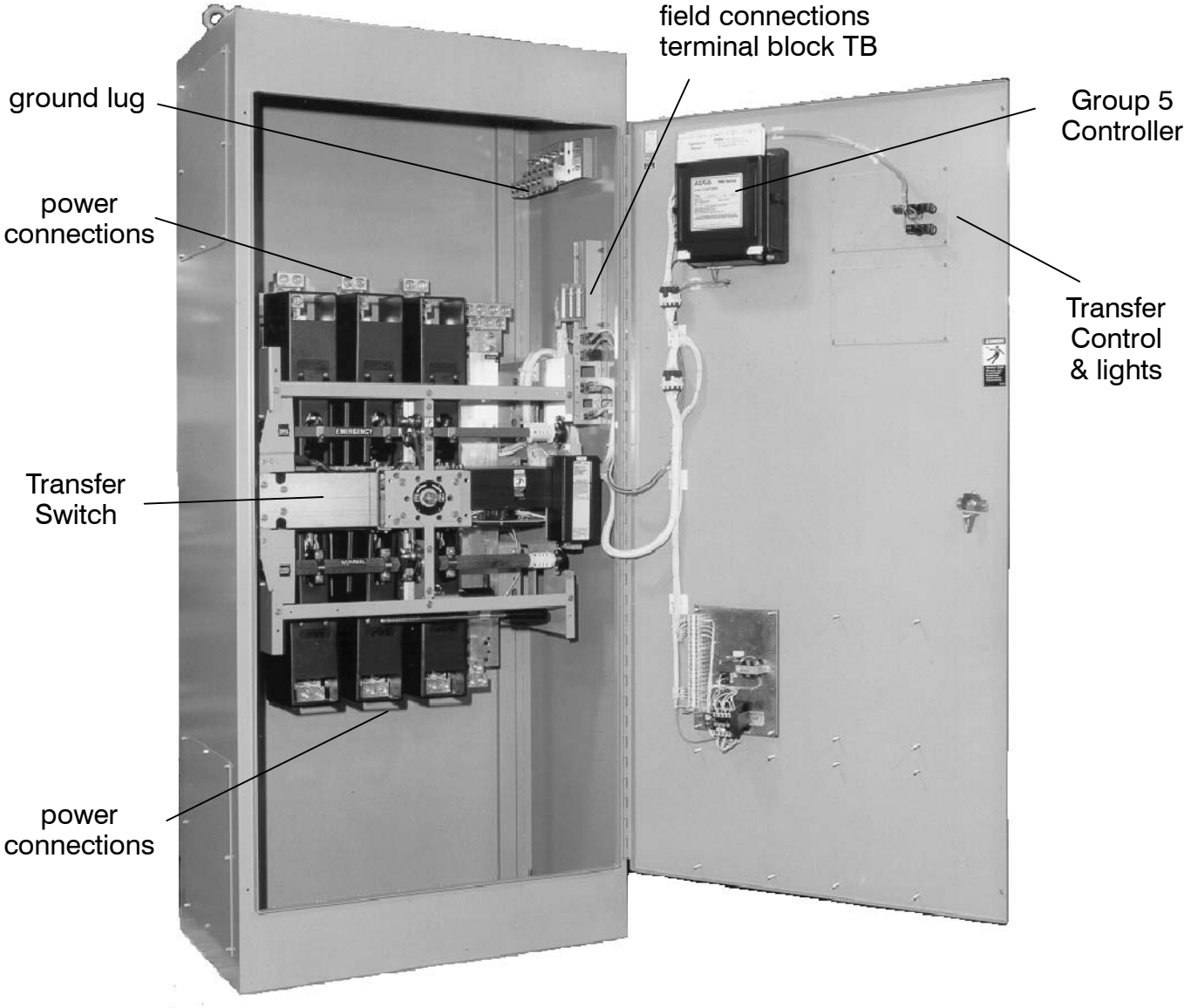

G–design 1200 amp size in typical enclosure with location of customer connections

SECTION 1 INSTALLATION

ASCO Series 7000 Automatic Transfer Switches are factory wired and tested. Field installation simply requires mounting and connection of service cables, and auxiliary control circuits (if required).

Remove the Shipping Skid (large ATSs)

For large ATSs, open the front door and remove the four lag screws (2 in front, 2 in rear) securing enclosure to the wood skid.

Supporting Foundation

The supporting foundation for the enclosure must be level and straight. Refer to the applicable enclosure outline drawing included with the switch for all mounting details including door opening space.

If bottom cable entry is used, the foundation must be prepared so that the conduit stubs are located correctly. Refer to the enclosure outline drawing for specified area and location. Provide cable bending space and clearance to live metal parts. When a concrete floor is poured, use interlocking conduit spacer caps or a wood or metal template to maintain proper conduit alignment.

Mounting

Refer to the *Outline and Mounting Diagram* provided with the ATS; it shows all mounting details and instructions.

⚠ CAUTION

Protect the switch from construction grit and metal chips to prevent malfunction or shortened life of the automatic switch switch.

Mount the ASCO ATS vertically to a rigid supporting structure. Level all mounting points by using flat washers behind the holes to avoid distortion of the switch.

Transfer switches rated 260 and 400 amp are mounted on an insulator backing piece (installed behind the transfer switch). If the transfer switch is removed from the cabinet and then reinstalled, this insulator piece must be placed behind the transfer switch. See Figure 1-1.

⚠ WARNING

Be sure that the insulator piece is behind the 260 and 400 ampere transfer switches.

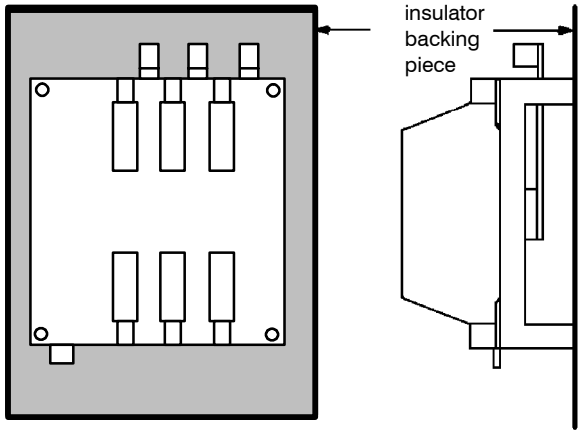

Figure 1-1. Insulator for 260 and 400 amp switches.

The controller is mounted on the cabinet door. An add-on DIN rail is provided for some optional accessories and is mounted below the controller on the door.

Line Connections

A *Wiring Diagram* is furnished with the ASCO Series 7000 ATS (separate from this manual). Refer to this drawing. All wiring must be made in accordance with the National Electrical Code and local codes.

⚠ DANGER

De–energize the conductors before making any line or auxiliary circuitry connections. Be sure that Normal and Emergency line connections are in proper phase rotation. Place engine generator starting control in the OFF position. Make sure engine generator is not in operation.

Testing Power Conductors

Do not connect the power conductors to the transfer switch until they are tested. Installing power cables in conduit, cable troughs and ceiling-suspended hangers often requires considerable force. The pulling of cables can damage insulation and stretch or break the conductor's strands. For this reason, after the cables are pulled into position, and before they are connected, they should be tested to verify that they are not defective or have been damaged during installation.

Connecting Power Conductors

After the power cables have been tested, connect them to the appropriate terminal lugs on the transfer switch as shown on the wiring diagram provided with the switch. Make sure the lugs provided are suitable for use with the cables being installed. Standard terminal lugs are solderless screw type and will accept the wire sizes listed on the drawings provided with the switch. Be careful when stripping insulation from the cables; avoid nicking or ringing the conductor. Remove surface oxides from cables by cleaning with a wire brush. When aluminum cable is used, apply joint compound to conductors. Tighten cable lugs to the torque specified on rating label.

Three cable spacers are included with 150 ampere transfer switches. When installing power cables, run the cables through the cable spacers as shown in Figure 1-2. Position cable spacers within 1½ inches from lugs.

⚠ CAUTION

The cable spacers must be located as shown for 150 ampere transfer switches.

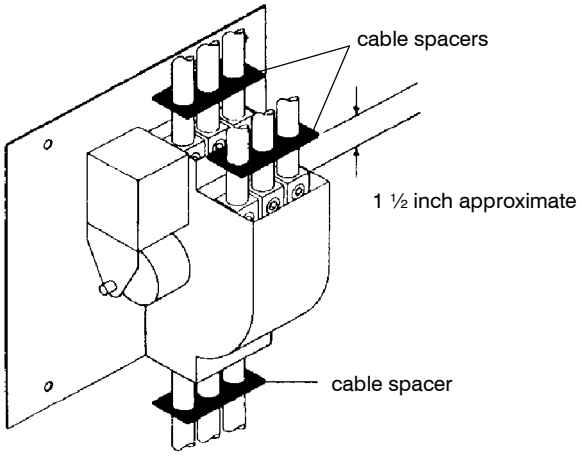

Figure 1-2. Cable spacer for C–design 150 amp. transfer switch

Do not run cables behind the switch. Cables can be bundled on the right side of the switch. Maintain proper electrical clearance between the live metal parts and grounded metal: ½ inch minimum for 30-400 amps, 1 inch minimum over 400 amps.

It is not necessary to remove the barriers from 30–400 amp. transfer switches to install cables. On 600–800 amp. Transfer Switches, you must remove the barriers to install the cables. See Figure 1–3. Be sure to reinstall the barriers carefully.

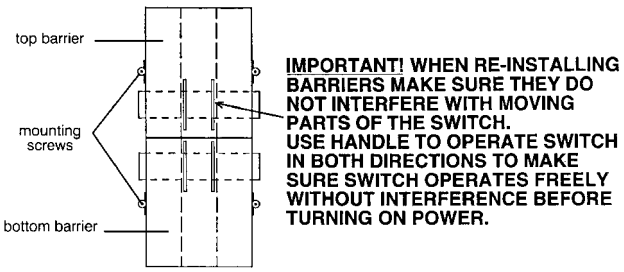

Figure 1-3. Barriers on F–design 600 & 800 amp. transfer switches

Bus Connections

If bus connection is used, use SAE grade 5 hardware to connect bus to appropriate terminal plates on the transfer switch. Wipe off bus surfaces before they are joined. If bus is very dirty, gently clean surfaces with a non–flammable solvent. Avoid touching cleaned surfaces.

⚠ CAUTION

Do not breathe cleaning solvent vapors.

Use SAE grade 5 hardware and tighten the bolted joints to the torque specified in Table A.

⚠ CAUTION

The reliablility of the connection depends on how clean and how tight the joint is.

Table A. Tightening torque values for bolted joints.

Bolt Diameter (Grade 5 hardware) in inches	Recommended Tightening Torque in foot pounds
5/16	12
3/8	20
1/2	50
5/8	95
3/4	155

Controller Ground

A grounding wire must be connected to the controller's lower left mounting stud. Because the controller is mounted on the enclosure door, a conductive strap must be used between the enclosure and the door. This connection provides proper grounding which does not rely upon the door hinges.

Harnesses

The transfer switch is connected to the left side of the controller by a plug-in harness (two plugs).

Engine Starting Contacts

The engine control contact connections (if used) are located on the transfer switch. Connect signal wires to appropriate terminals as specified in Table B and Table C and shown in Figure 1-4 and Figure 1–5.

Table B. Engine start connections for C–design 30 – 150 amp transfer switches

When normal source fails	Terminals on transfer switch
contact closes	TB14 and TB15
contact opens	TB14 and TB16

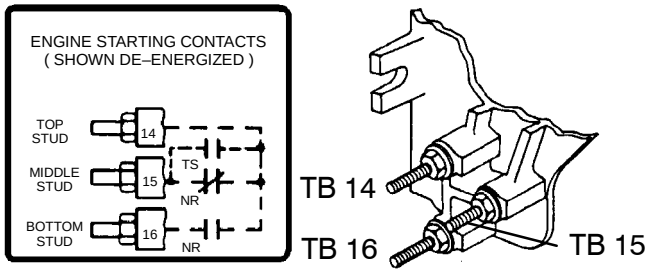

Figure 1-4. Engine starting contact label and location for C–design 30 – 150 amp switches.

Table C. Engine start connections for 260 – 4000 amp transfer switches

When normal source fails	Terminals on transfer switch
contact closes	TB1 and TB2
contact opens	TB1 and TB3

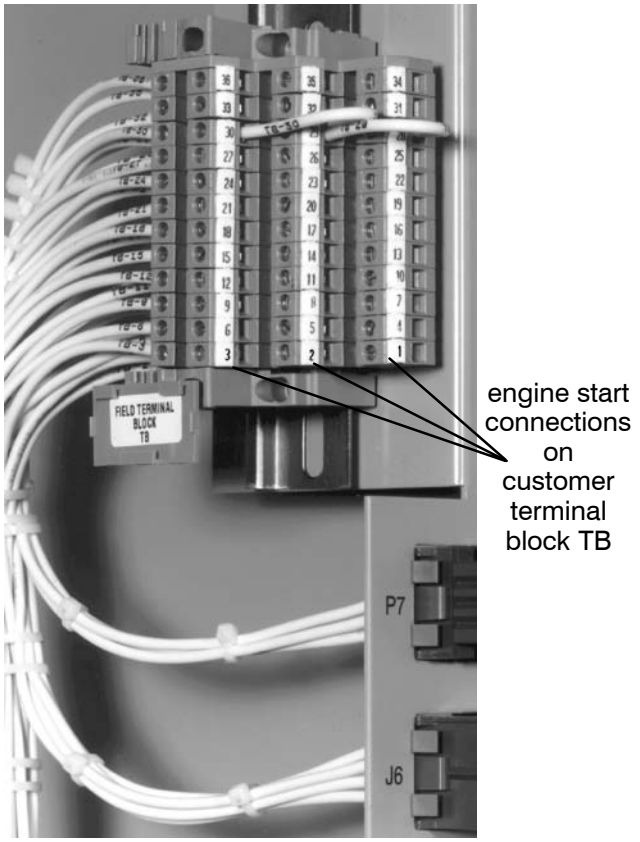

Figure 1-5. Customer terminal block on the top right side of enclosure on 260–4000 amp. switches.

Auxiliary Circuits

Connect auxiliary circuit wires to appropriate terminals on the transfer switch. Note the control features that are furnished on this switch. Make the necessary auxiliary connections by referring to the Wiring Diagram.

Functional Test

The Functional Test consists of three checks:

- ☐ 1 — Manual Operation Test, page 1–4
- ☐ 2 — Voltage Checks, page 1–5
- ☐ 3 — Electrical Operation, page 1–6

⚠ CAUTION

Do these checks in the order presented to avoid damaging the ATS.

Read all instructions on the Wiring Diagram and labels affixed to the automatic transfer switch. Note the control features that are provided and review their operation before proceeding.

Continue to **1 – Manual Operation Test** on next page.

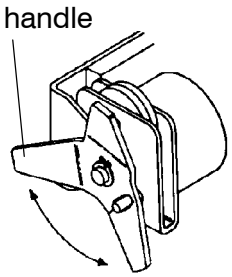

Figure 1-6.
30 – 150 amp.
C–design
transfer switches

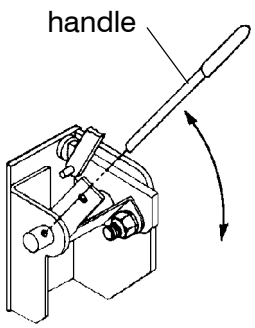

Figure 1-7.
260 & 400 amp.
E–design
transfer switches

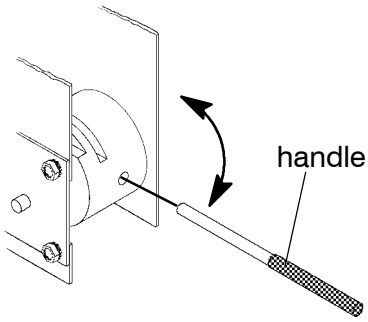

Figure 1-8
600 & 800 amp.
F–design
transfer switches

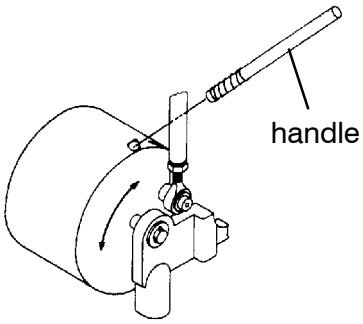

Figure 1-9.
3000 & 4000 amp.
F–design
transfer switches

1 – Manual Operation Test

A maintenance handle (detachable on 260 – 4000 amp. sizes) is provided on the transfer switch **for maintenance purposes only**. Manual operation of the switch should be checked before it is energized (operated electrically).

⚠ WARNING

Do not manually operate the transfer switch until both power sources are disconnected: open both circuit breakers.

1. Select the appropriate switch amperage size / design and follow the directions for installing the handle:

   30 – 150 amp. C–design See Figure 1-6.
   Grasp attached manual handle (left side of the operator) and turn it with thumb and fingers.

   260 and 400 amp. E–design See Figure 1-7.
   Insert the manual handle into the hole in the shaft, left side of the operator.

   600 and 800 amp. F–design See Figure 1-8.
   Insert the manual handle into the hole in the weight.

   1000 – 3000 ampere. G–design See Figure 1-10.
   Install the hub onto the center operator shaft and insert the manual firmly into the hole in the side of the hub (spring fully compressed).

   3000 and 4000 amp. F–design See Figure 1-9.
   Insert the manual handle into the hole in the weight.

2. Move the handle as shown to manually operate the Transfer Switch. The switch should operate smoothly without binding. If it does not, check for shipping damage or construction debris.

3. Return the transfer switch to the *N* (normal) position. Remove manual operator handle (if detachable) and store it on the transfer switch in the place provided.

⚠ WARNING

Verify that the maintenance handle has been removed (260–4000 amp. size transfer switches) before proceeding!

Now continue to **2 – Voltage Checks** on next page.

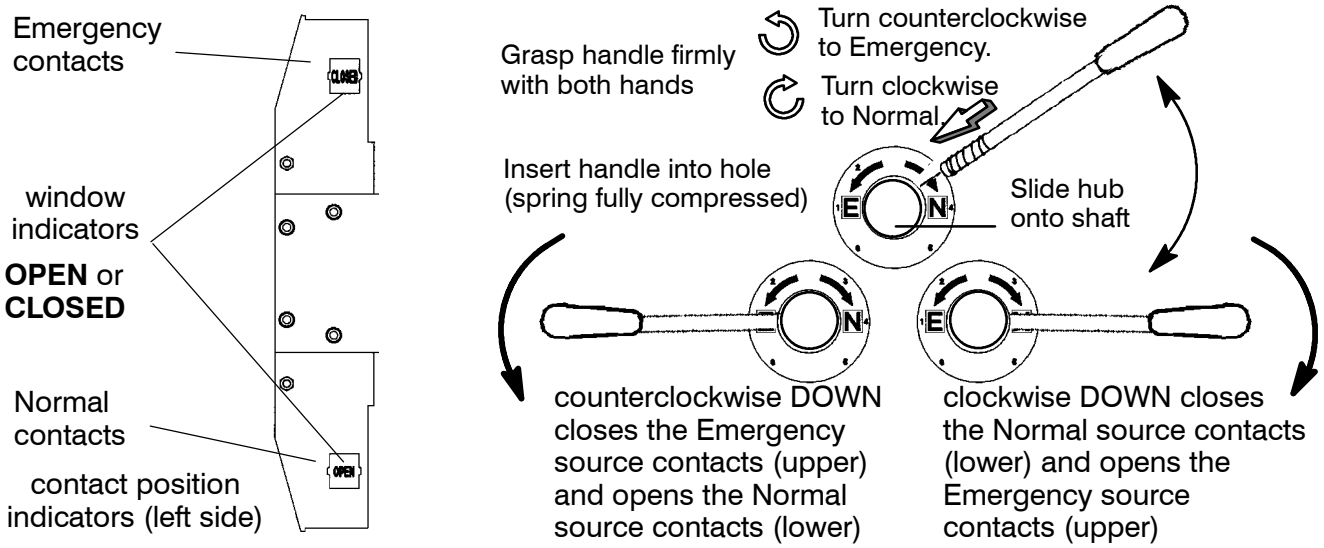

Figure 1-10. 1000 – 3000 amp. G design transfer switches.

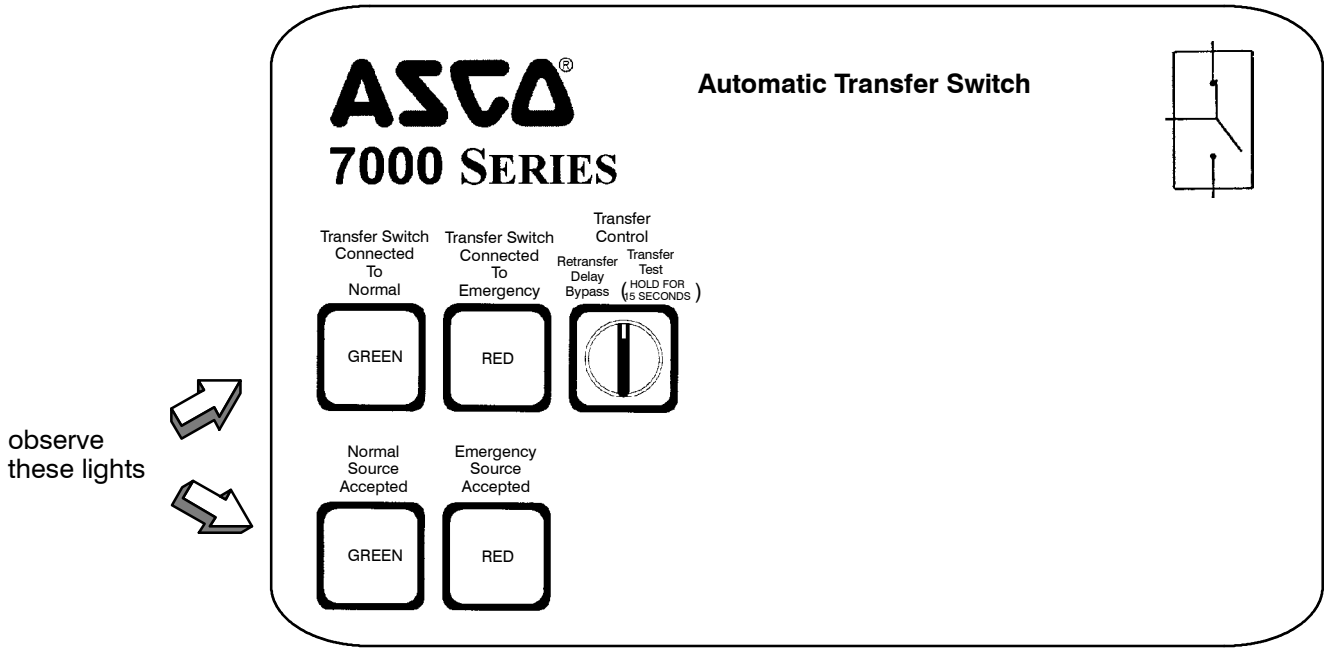

Figure 1-11. Standard controls and indicators.

2 – Voltage Checks

First check nameplate on transfer switch; rated voltage must be the same as normal and emergency line voltages.

⚠ CAUTION

Verify that the feeders have been connected to the proper lugs.

⚠ DANGER

Use extreme caution when using a meter to measure voltages. Do not touch power terminals; shock, burns, or death could result !

Perform steps 1 through 6 at the right. Observe the status lights. See Figure 1–11.

- ■ Black square means light is on.
- ❒ White square means light is off.

* If necessary, adjust voltage regulator on the generator according to the manufacturer's recommendations. The Automatic Transfer Switch will respond only to the rated voltage specified on the Transfer Switch nameplate.

Note

Refer to Section 3 of *Group 5 Controller User's Guide* 381333–126 for how to display the Status of the ATS and the Voltage and Frequency of each source.

Now continue to **3 – Electrical Operation** on next page.

1	Close the normal source circuit breaker. The *Transfer Switch Connected To Normal* and the *Normal Source Accepted* lights should come on.	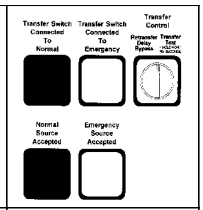
2	Use an accurate voltmeter to check phase to phase and phase to neutral voltages present at the transfer switch normal source terminals.	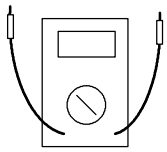
3	Close the emergency source circuit breaker. (Start generator, if necessary.) The *Transfer Switch Connected To Normal* & *Emergency Source Accepted* lights should come on.	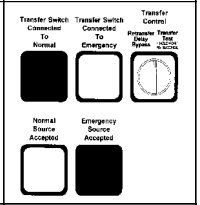
4	Use an accurate voltmeter to check phase to phase and phase to neutral voltages present at the transfer switch emergency source terminals.*	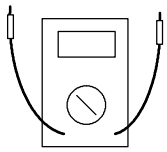
5	Use a phase rotation meter to check phase rotation of emergency source; it must be the same as the normal source.	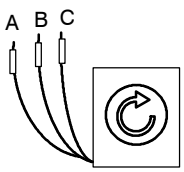
6	Shut down the engine–generator, if applicable. The *Emergency Source Accepted* light should go off. Then put the starting control selector switch (on the generator set) in the *automatic* position. Close enclosure door.	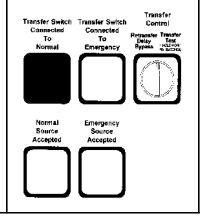

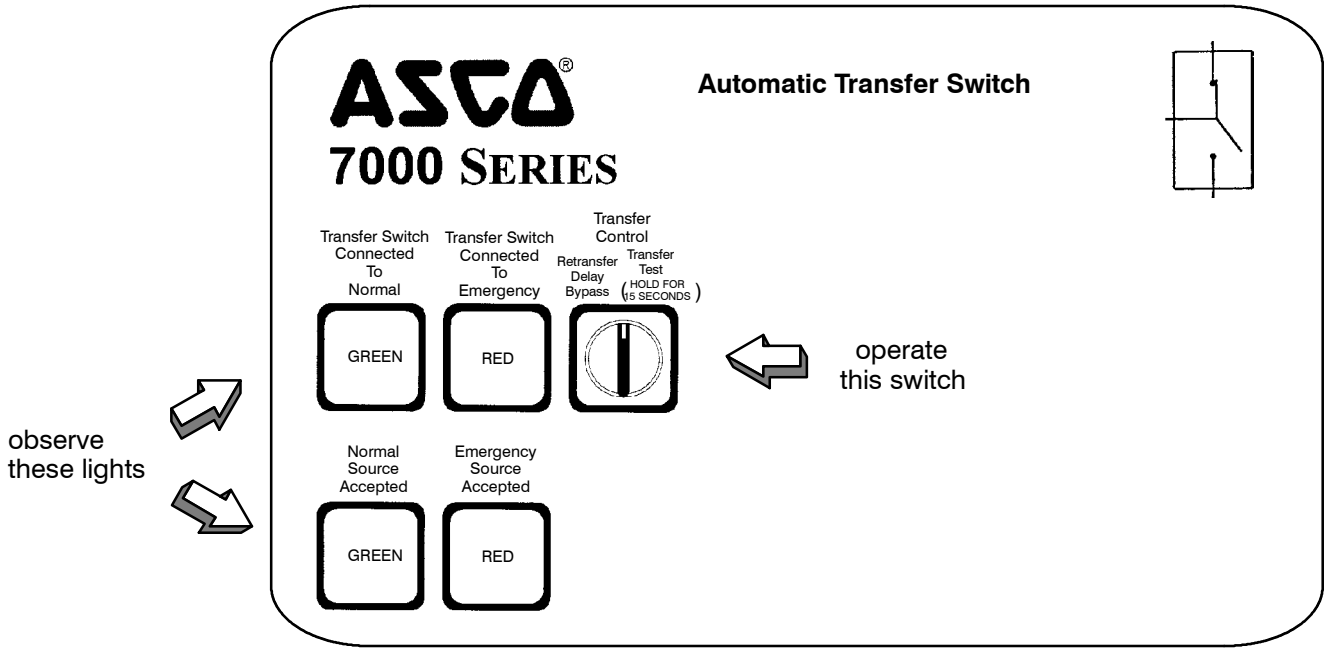

Figure 1-12. Standard controls and indicators.

3 – Electrical Operation

This procedure will check the electrical operation of the Automatic Transfer Switch. See Figure 1–12.

⚠ WARNING

Close the enclosure door first.

Transfer Test

Both normal and emergency sources must be available and the emergency source generator (if used) must be capable of being started in this procedure.

Perform steps 1 through 5 at the right. Observe the status lights.

- ■ Black square means light is on.
- ❒ White square means light is off.

1	The *Transfer Switch Connected To Normal* and *Normal Source Accepted* lights should be on.	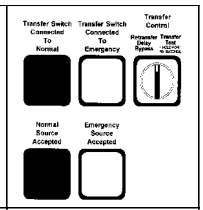
2	Turn and hold **Transfer Control** switch clockwise to *Transfer Test* until the engine starts and runs (within 15 sec.). *Emergency Source Accepted* light should come on.	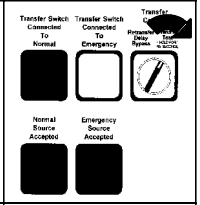
3	Transfer switch will operate to the Emergency position after Feature 2B time delay. The *Transfer Switch Connected To Emergency* light should come on and *Load Connected to Normal* light goes off.	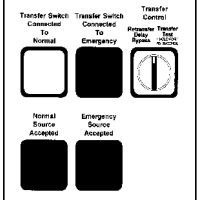
4	Transfer switch will operate back to Normal position after Feature 3A time delay. For immediate retransfer turn **Transfer Control** counterclockwise to *Retransfer Delay Bypass*. The *Transfer Switch Connected To Normal* light should come on; *Transfer Switch Connected to Emergency* light should go off.	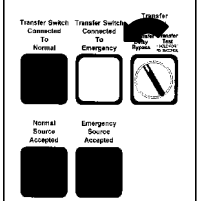
5	The engine–generator will stop after the Feature 2E time delay (unloaded running engine cool-down). The *Emergency Source Accepted* light should go off.	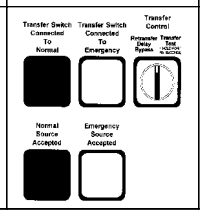

This completes the Functional Test of the ATS.

SECTION 2 TESTING & SERVICE

TRANSFER TEST

Operate the 7000 Series ATS at least once a month by following the five–step **Electrical Operation Transfer Test** procedure on page 1–6.

PREVENTIVE MAINTENANCE

Reasonable care in preventive maintenance will insure high reliability and long life for the 7000 Series ATS. An annual preventive maintenance program is recommended.

ASCO Services, Inc. (ASI) is ASCO Power Technologies's national service organization. ASI can be contacted at 1-800-800-2726 for information on preventive maintenance agreements.

Checklist for Yearly Inspection

⚠ DANGER

Hazardous voltage capable of causing shock, burns, or death is used in this transfer switch. Deenergize both Normal – Emergency power sources before performing inspections!

☐ **Clean the ATS enclosure.** Brush and vacuum away any excessive dust accumulation. Remove any moisture with a clean cloth.

☐ **Check the transfer switch contacts**. Remove the transfer switch barriers and check contact condition. Replace the contacts if they become pitted or worn excessively. Reinstall the barriers carefully.

☐ **Maintain transfer switch lubrication**. If the transfer switch is subjected to severe dust or abnormal operating conditions, renew factory lubrication on all movements and linkages. Relubricate the solenoid operator if the TS coil is replaced. Do not use oil; order **lubrication 625550–001** (Castrol *Endurex*® 4000 lubricant) for 30–400 amp., or order ***lubrication kit 75-100*** for 600–4000 amp. size.

☐ **Check all cable connections & retighten them**.

REPLACEMENT PARTS

Replacement parts are available in kit form. When ordering parts provide the Serial No., Bill of Material No. (BOM), and Catalog No. from the transfer switch nameplate. Contact your local ASCO Power Technologies Sales Office or ASI:

In the United States
call 1 – 800 – 800 – ASCO (2726)

In Canada
call 1 – 888 – 234 – ASCO (2726)

DISCONNECTING THE CONTROLLER

The harness disconnect plugs are furnished for repair purposes only and should not have to be unplugged. If the controller must be isolated, follow these steps:

Disconnecting the Plugs

⚠ WARNING

Do not unplug the controller until steps 1a or 1b is completed.

1. Observe the position of the transfer switch.
   a. If the transfer switch is in the *Normal* position, first place standby engine starting control in the *off* position. Second, then open the emergency source circuit breaker. Third, open the normal source circuit breaker.
   b. If the transfer switch is in the *Emergency* position, first open the normal source circuit breaker. Second, place the engine starting control in the *test* or *run* position. Third, open the emergency source circuit breaker.
2. Separate the two quick disconnect plugs by squeezing the latches. Do not pull on the harness wires.

Reconnecting the Plugs

⚠ WARNING

Do not reconnect the controller until steps 1a or 1b is completed.

1. Observe the position of the transfer switch.
   a. If the transfer switch is in the *Normal* position, first be sure that <u>both</u> normal and emergency source circuit breakers are open. Second, be sure that the standby engine starting control is still in the *off* position.
   b. If the transfer switch is in the *Emergency* position, first be sure that <u>both</u> normal and emergency source circuit breakers are open.
2. The two harness plugs and sockets are keyed. Carefully align the plugs with the sockets and press straight in until both latches click. <u>Close the door</u>!
3. Restore the two sources in sequence as follows:
   a. If the transfer switch is in the *Normal* position, first close the normal source circuit breaker. Second, close the emergency source circuit breaker. Third, place the standby engine starting control in the *automatic* position.
   b. If the transfer switch is in the *Emergency* position, first close the emergency source circuit breaker. Second close the normal source circuit breaker.

Katolight Service - Master Repair Manual - Page 3845

MANUAL LOAD TRANSFER

This procedure will manually transfer the load if the controller is disconnected.

⚠ WARNING

Do not manually operate the transfer switch until both power sources are disconnected (all conductors deenergized).

1. Deenergize both the normal and emergency source conductors (remove fuses or open circuit breakers).
2. Use the maintenance handle to manually operate the transfer switch to the opposite source. See *Manual Operation* on page 1–4.
3. Then remove the maintenance handle. See page 1–4.

⚠ WARNING

Verify that the maintenance handle has been removed before proceeding!

4. If the transfer switch is in the Emergency position manually start the engine generator and then install emergency source fuse or close the circuit breaker.

TROUBLE-SHOOTING

Note any optional accessories that may be furnished on the automatic transfer switch (ATS) and review their operation. Refer to any separate drawings and/or instructions that may be packed with the ATS.

⚠ DANGER

Hazardous voltage capable of causing shock, burns, or death is used in this switch. Do not touch the power or load terminals of the transfer switch!

Table 2-1. Trouble-Shooting Checks.

PROBLEM	CHECK IN NUMERICAL SEQUENCE		
	1 OPERATION	2 GEN-SET	3 VOLTAGE
Engine–generator set does not start when the **Transfer Control** switch is turned and held in *Transfer Test* position or when the normal source fails.	Hold *Transfer Test* switch 15 seconds or the outage must be long enough to allow for Feature 1C time delay plus engine cranking and starting time.	Starting control must be in the automatic position. Batteries must be charged and connected. Check wiring to engine starting contacts on customer terminal block TB. Verify that the small plug J3 is connected to receptacle P3.	–
Transfer switch does not transfer the load to the emergency source after the engine–generator set starts.	Wait for Feature 2B time delay to time out (if used).	Generator output circuit breaker must be closed. Generator frequency must be at least 95% of nominal (57 Hz for a 60 Hz system.) *	Voltmeter should read at least 90% of nominal phase to phase voltage between transfer switch terminals EA and EC (or EL1 and EL2 for 2 pole switches). *
Transfer switch does not transfer the load to normal source when normal returns or when the **Transfer Control** switch is released.	Wait for Feature 3A time delay to time out (if used).	–	Voltmeter should read at least 90% of nominal phase to phase voltage between transfer switch terminals NB and NC, NC and NA, and NA and NB (or NL1 and NL2 for 2 pole switches).
Engine–generator-set does not stop after load retransfer to the normal source.	Wait for Feature 2E time delay to time out (if used).	Starting control must be in the automatic position.	–

***** These are factory settings. Refer to the **Group 5 Controller User's Guide**.

If the problem is isolated to circuits on the controller or the transfer switch, call your local ASCO Power Technologies sales office or ASI: in the United States, call 1–800–800–2726 or in Canada call 1–888–234–2726. Furnish the Serial No., Catalog No., and Bill of Material (BOM) No. from the transfer switch nameplate.

Katolight Service - Master Repair Manual - Page 3846

INDEX

A

auxiliary circuits, 1–3

B

barriers, 1–2

C

cable
  lugs, 1–2
  preparation, 1–2
  spacers, 1–2
    illustration of, 1–2

catalog number, inside cover

cleaning, 2–1

connections
  line, 1–1

contact position indicators, 1–4

controller, 1–1, 1–2
  disconnecting, 2–1
  see *Controller User's Guide*
  grounding, 1–2

E

electrical operation, 1–6

Emergency Source Accepted light, 1–5, 1–6

F

frequency, generator, 2–2

functional test, 1–3, 1–4, 1–5, 1–6

H

harness, 1–2
  disconnect plugs, 2–1

I

inspection, 3–1

installation, 1–1

insulator backing piece, 1–1
  illustration of, 1–1
  warning, 1–1

L

labels,
  engine start contacts, 1–3
  rating, cover

lights, 1–5, 1–6

lubrication, 2–1

M

maintenance, preventive, 3–1

manual load transfer, 3–2
  warning, 3–2

manual operation, 1–4
  illustration of, 1–4
  warning, 1–4

N

nameplate, cover

Normal Source Accepted light, 1–5, 1–6

O

operation
  electrical, 1–6
  manual, 1–4
    illustration of, 1–4
    warning, 1–4
  sequence of, 2–1

optional accessories
  see *Controller User's Guide*

P

parts, 2–1

phase rotation check, 1–5

problem, 2–2

R

rating label, cover

replacement parts, 2–1

S

settings
  see *Controller User's Guide*

T

test, functional, 1–3, 1–4, 1–5, 1–6

time delays, 2–1
  see *Controller User's Guide*

Transfer Control selector switch
  Retransfer Delay Bypass, 1–6
  Transfer Test, 1–6

Transfer Switch Connected to Emergency light, 1–5, 1–6

Transfer Switch Connected to Normal light, 1–5, 1–6

transfer test, 1–6

transfer to emergency, 1–6

transfer to normal, 1–6

trouble–shooting, 2–2

V

voltage checks, 1–5

voltage, pickup and dropout settings
  see *Controller User's Guide*

Printed in U.S.A.

© ASCO Power Technologies, L.P. 2001

User's Guide

Group 5 Controller for ASCO® 7000 Series Automatic Transfer Switch Products

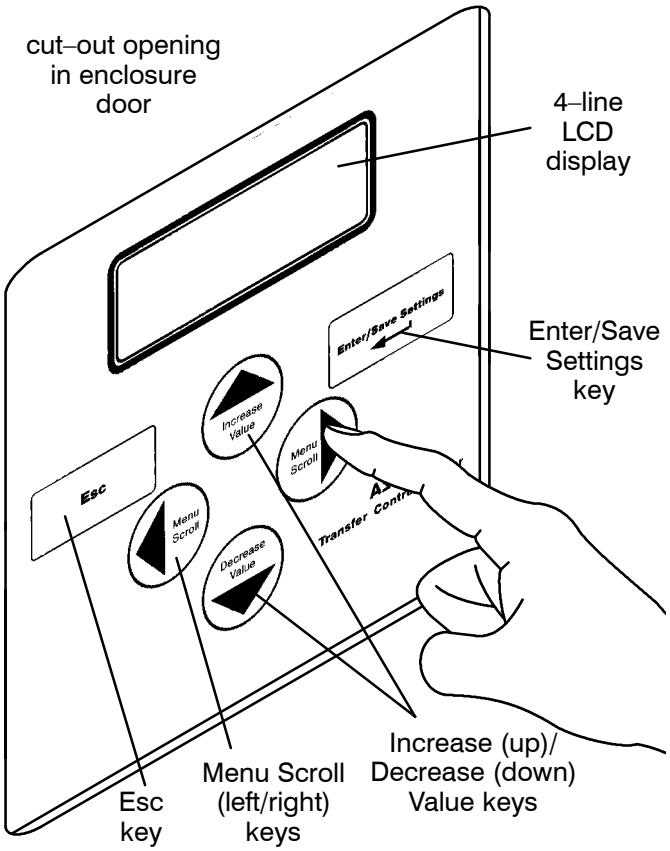

Keypad and display

An experienced licensed electrician must install the switch.

⚠ DANGER

DANGER is used in this manual to warn of high voltages capable of causing shock, burns, or death.

⚠ WARNING

WARNING is used in this manual to warn of possible personal injury.

⚠ CAUTION

CAUTION is used in this manual to warn of possible equipment damage.

Note: Refer to the outline and wiring drawings provided with your 7000 Series ATS product for all installation and connection details and accessories.

Note: Refer to the *Operator's Manual* for the ASCO 7000 Series ATS product for installation, functional testing, sequence of operation,and troubleshooting.

Description

ASCO 7000 Series Automatic Transfer Switch products utilize the Group 5 Controller for sensing, timing, and control functions. This state–of–the art microprocessor–based controller includes a built–in keypad and a four–line LCD display. All monitoring and control functions can be done with the enclosure door closed for greater convenience. In addition, all changes in voltage settings (except for nominal voltage) and time delays can be made through a system of menus.

TABLE OF CONTENTS

section-page

OVERVIEW
Controls 1-1
Settings 1-2

SETTINGS
How to Change a Setting 2-1
Voltage & Frequency 2-2
Time Delays 2-4
Features 2-6
General 2-8
Engine Exerciser 2-10
View Event Log 2-12
Service — Statistics / Diagnostics 2-13

OPERATING the CONTROLS
Status of ATS and Sources 3-1
Display Messages and Their Meanings . . . 3-2

DESCRIPTION of OPERATION
Open–Transition 4-1
Closed–Transition 4-3
Delayed–Transition 4-6

APPENDIX
DIP switch actuators A-2
Voltage jumper blocks A-4

INDEX . . . . . back page

ASCO POWER TECHNOLOGIES L.P. 50 Hanover Road, Florham Park, New Jersey 07932–1591 USA
telephone 1 800 937–2726 (ASCO), for service call 1 800 800–2726 (ASCO) www.asco.com

381333–126 F

ASCO POWER TECHNOLOGIES CANADA PO Box 1238, 17 Airport Road, Brantford, Ontario, Canada N3T 5T3
telephone 519 758–8450, fax 519 758–0876, for service call 1 888 234–2726 (ASCO) www.asco.ca

Katolight Service - Master Repair Manual - Page 3849

Control Overview

Six keys allow access to all monitoring and setting functions. Two levels of screens are used. The *status level* provides information about the automatic transfer switch. The *settings level* allows configuration of the controller. Access to some settings may require entering a password (if the controller is set for one – see page 2–1 and Appendix A–3).

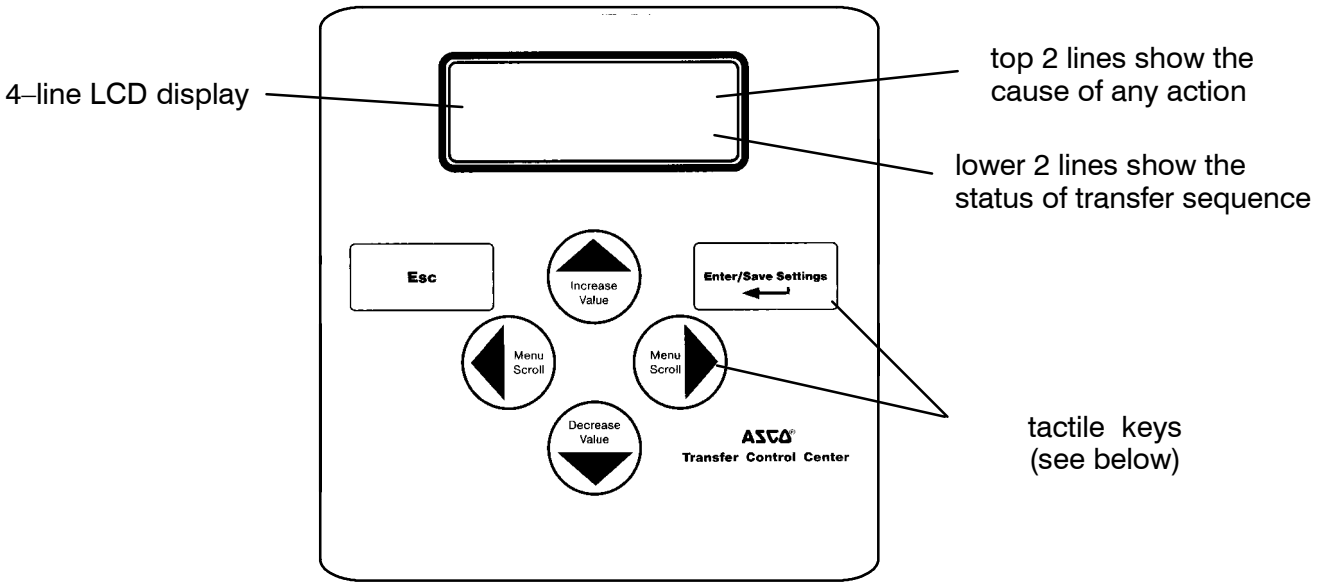

Controller display and keypad.

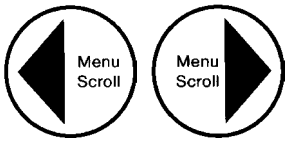

Left–Right Arrows

The left ◀ and right ▶ arrow keys (*Menu Scroll*) navigate through the screens.



Enter/Save Settings

The *Enter/Save Settings* ↲ key move from the status level to the settings level screens. It also is used to enter a new setting.

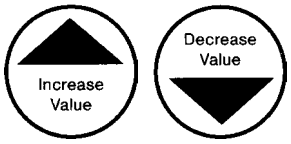

Up–Down Arrows

The up ▲ and down ▼ arrow keys (*Increase Value* and *Decrease Value*) modifies a setting (setup parameter) while in the settings level screens.

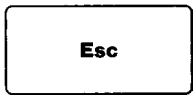

Esc key

The *Esc* key ignores a change and returns to the status level.

Settings Overview

The controller settings can be displayed and changed from the keypad. Some settings may require a password (if the controller is set up for one).



From the **ATS Status** display, press **Enter/Save Settings** ↲ key to move to the **Settings** level of menus.





Press the right arrow key ▶ to see the eight parameter information headings (as shown below). An overview of each setting is listed below. The detailed menus for each setting are on the following pages.

8 Parameter Menus (loop back to beginning)

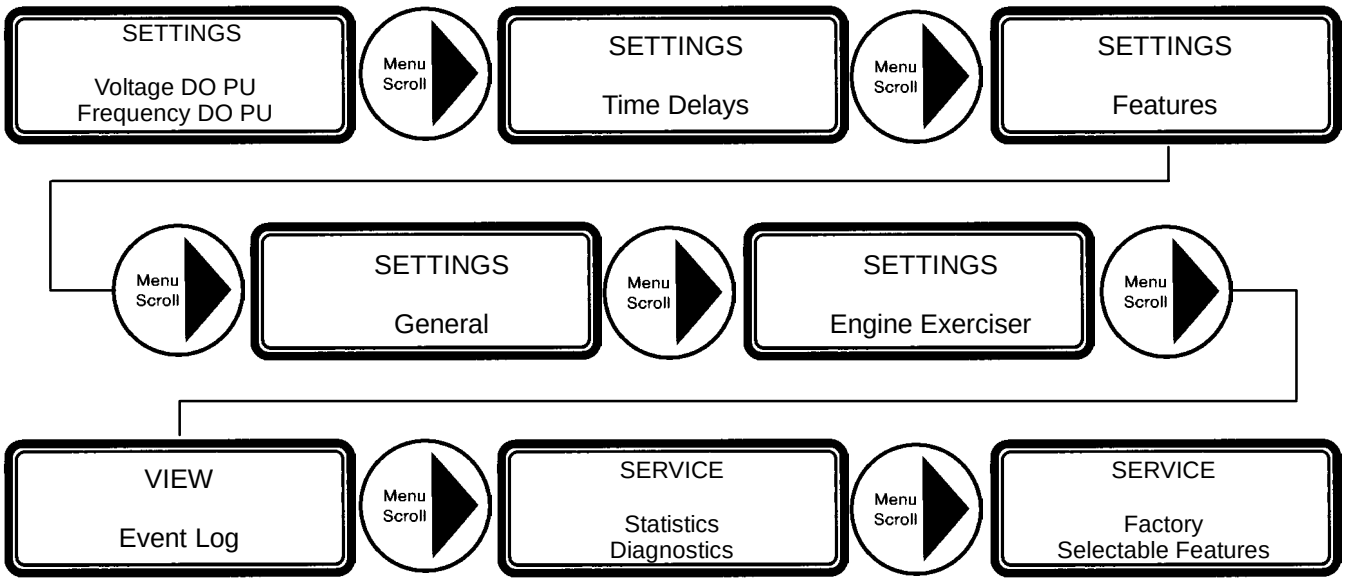

Voltage and Frequency Settings see page 2–2
CP settings and Normal & Emergency voltage and frequency pickup & dropout.

Time Delay Settings see page 2–4
Bypass running time delay, and settings for all standard time delays.

Features Settings see page 2–6
Commit on transfer, shed load, phase rotation, and inphase monitor settings.

General Settings see page 2–8
Reset settings, language, communication, logging, and password.

Engine Exerciser Settings see page 2–10
Present date and time, seven exercise programs each with six parameters.

View Event Log see page 2–12
Last 99 events in date and time order; six types and seven reasons are logged.

Service Statistics/Diagnostics, Factory Selectable Features
For factory service use only. see pages 2–13

How to Change a Setting

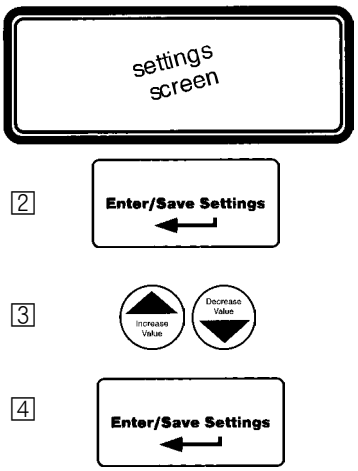

To change a setting in the controller (CP):

1 Navigate to the settings screen that you want to change (see page 1–2).

2 Press **Enter/Save Settings** ↲ key to start the first field blinking. If the controller requires a password, see below.

3 Press up ▲ and down ▼ arrow keys to change flashing digit(s) or word and press **Enter/Save Settings** ↲ key to move to next field.

4 Repeat step 3 until all the fields have been entered.

Tips ☞ If a field is blinking, the CP is waiting for information to be entered.

The **Esc** key will end the editing session.

Password

Tip ☞ **Default password is 1111** (see page 2–8)

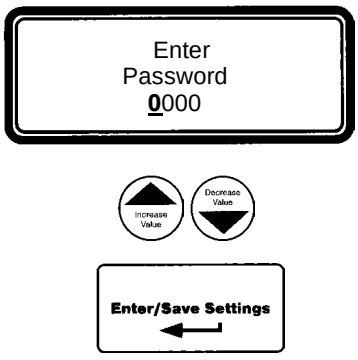

If **Enter Password** displays, you must enter the correct password first.

Use the up ▲ and down ▼ arrow keys to change the flashing digit of the password. Press the **Enter/Save Settings** ↲ key to move to next next digit (left to right). When the correct password is displayed, press the **Enter/Save Settings** ↲ key.

If *WRONG PASSWORD !!!* displays, you are returned to the first flashing digit. When the correct password is displayed, press the **Enter/Save Settings** ↲ key.

You can now change the settings on the selected screen.

Tip ☞ Once the password is entered it will stay *unlocked* for 5 minutes after last key is pushed so that you do not have to keep entering it. So, to save time, plan to make all your settings at one time.

Voltage & Frequency Settings

Unless otherwise specified on the order, the controller voltage and frequency settings are set at the factory to the default values. If a setting must be changed, carefully follow the procedure on the next page. Some settings may require a password (if the controller is set up for one).

⚠ CAUTION

Any indiscriminate change in these settings may affect the normal operation of the Automatic Transfer Switch. This change could allow the load circuits to remain connected to an inadequate source

Description	Settings	Default Setting % of nominal	Adjustment Range increments of 1%	Display Screen (see next page)
Normal Source Voltage	Dropout	85 %	70 to 98 %	NORMAL VOLTAGE Dropout
	Pickup	90 %	85 to 100 %	NORMAL VOLTAGE Pickup
	Over Voltage Trip	off	102 to 115 %	NORMAL VOLTAGE OV Trip
	Unbalance Enable	no	yes or no	NORMALVOLTAGEUNBAL Enable
	Unbalance Dropout	20 %	5 to 20 %	NORMALVOLTAGEUNBAL Dropout
	Unbalance Pickup	10 %	3 to 18 %	NORMALVOLTAGEUNBAL Pickup
Emergency Source Voltage	Dropout	75 %	70 to 98 %	EMERG VOLTAGE Dropout
	Pickup	90 %	85 to 100 %	EMERG VOLTAGE Pickup
	Over Voltage Trip	off	102 to 115 %	EMERG VOLTAGE OV Trip
	Unbalance Enable	no	yes or no	EMERG VOLTAGE UNBAL Enable
	Unbalance Dropout	20 %	5 to 20 %	EMERG VOLTAGE UNBAL Dropout
	Unbalance Pickup	10 %	3 to 18 %	EMERG VOLTAGE UNBAL Pickup
Normal Source Frequency	Dropout	90 %	85 to 98 %	NORMAL FREQUENCY Dropout
	Pickup	95 %	90 to 100 %	NORMAL FREQUENCY Pickup
	Over Frequency Trip	off	102 to 110 %	NORMAL FREQUENCY OF Trip
Emergency Source Frequency	Dropout	90 %	85 to 98 %	EMERG FREQUENCY Dropout
	Pickup	95 %	90 to 100 %	EMERG FREQUENCY Pickup
	Over Frequency Trip	off	102 to 110 %	EMERG FREQUENCY OF Trip

Voltage & Frequency Settings

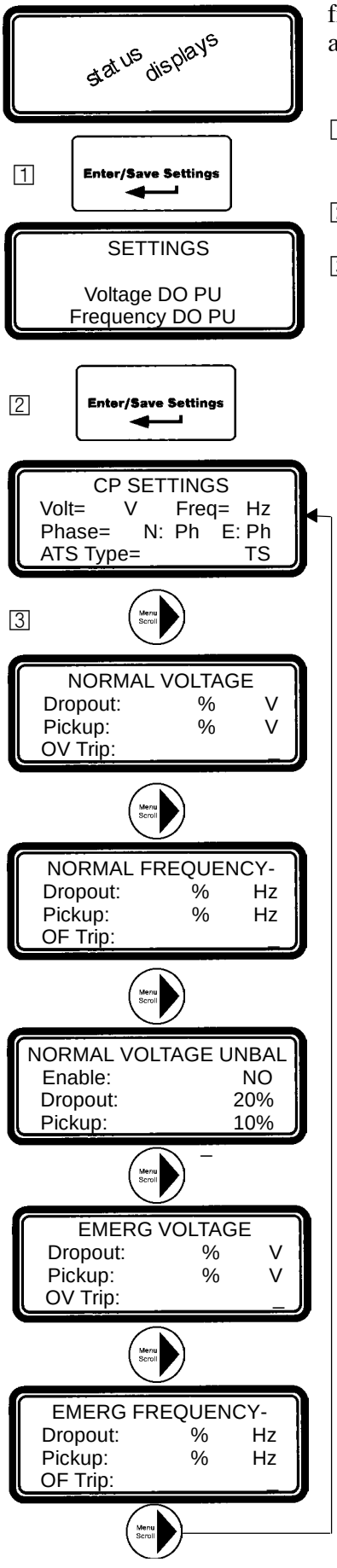

The controller (CP) voltage and frequency setting can be displayed and changed from the keypad. See the table on the previous page. Some settings may require a password (if the controller is set up for one).

1 From any of the **Status** displays, press the **Enter/Save Settings** ↵ key to move to the **Settings** level of menus.

2 Press the **Enter/Save Settings** ↵ key to move to the **CP Settings** display.

3 Then you can press the **right arrow** ▶ key to see the other voltage and frequency displays (as shown below). An overview explanation of each setting is listed below.

5 Voltage & Frequency Menus (last menu loops back to first)

CP Settings see page 2–1

This display shows the base configuration of the controller. These settings are hardware activated and cannot be changed from the keypad:

Nominal source voltage — Normal and Emergency sources
Nominal source frequency — 50 or 60 Hz
Normal & Emergency source sensing — single or 3 phase
Switch type — open, closed, or delayed transition

Normal Voltage see page 2–1

This display shows pickup, dropout, and over–voltage trip settings for the Normal source. They are in percentage of nominal voltage and volts rms.

Normal Frequency see page 2–1

This display shows pickup, dropout, and over–frequency trip settings for the Normal source. They are in percentage of nominal frequency and Hz.

Normal Voltage Unbalance see page 2–1

This display appears only if the CP is set for 3 phase sensing on Normal. When enabled, the CP considers the Normal source unacceptable if the calculated voltage unbalance is greater than the specified dropout.

Emerg Voltage see page 2–1

This display shows pickup, dropout, and over–voltage trip settings for the Emergency source. They are in percent of nominal voltage and volts rms.

Emerg Frequency see page 2–1

This display shows pickup, dropout, and over–frequency trip settings for Emergency source. They are in percentage of nominal frequency and Hz.

Emerg Voltage Unbalance (not shown) see page 2–1

This display appears only if the CP is set for 3 phase sensing on Emergency. When enabled, the CP considers the Emergency source unacceptable if the calculated voltage unbalance is greater than the specified dropout.

Time Delay Settings

Unless otherwise specified on the order, the Controller time delay settings are set at the factory to the default values. If a setting must be changed, follow the procedure on the next page. Some settings may require a password (if controller is set up for one).

⚠ CAUTION

Any indiscriminate change in these settings may affect the normal operation of the Automatic Transfer Switch. This change could allow the load circuits to remain connected to an inadequate source.

Feature	Time Delay	Default Setting	Adjustment Range 1 sec. increments	Display Screen (see next page)
1C [3]	override momentary Normal source outages	1 second	0 to 6 sec see **CAUTION** below	TD NormFail
1F	override momentary Emergency source outages	0	0 to 60 min 59 sec	TD EmrgFail
2B	transfer to Emergency	0	0 to 60 min 59 sec	TD N>E
2E	unloaded running (engine cooldown)	5 minutes	0 to 60 min 59 sec	TD EngCool
3A	retransfer to Normal (if Normal fails)	30 minutes	0 to 60 min 59 sec	TD E>N if Normal Fail
	retransfer to Normal (if just a test)	30 seconds	0 to 60 min 59 sec	TD E>N if Test Mode
31F [4]	Normal to Emergency pre–transfer signal	0	0 to 5 min 59 sec	TD N>E Xfer Signal PreXfer
31M [4]	Normal to Emergency post–transfer signal	0	0 to 5 min 59 sec	TD N>E Xfer Signal PostXfer
31F, 31M	bypass 31F & 31M if Normal fails	no	yes or no	TD N>E Xfer Signal BypassIfNFail
31G [4]	Emergency to Normal pre–transfer signal	0	0 to 5 min 59 sec	TD E>N Xfer Signal PreXfer
31N [4]	Emergency to Normal post–transfer signal	0	0 to 5 min 59 sec	TD E>N Xfer Signal PostXfer
31G, 31N	bypass 31G & 31N if Emergency fails	no	yes or no	TD E>N Xfer Signal BypassIfEFail
7ACTS/B only[1]	in sync	1.5 second	0 to 3.0 seconds 0.1 sec increments	CTTS TD SyncMonitorTD
	failure to synchronize	5 minutes	0 to 5 min 59 sec	CTTS TD FailToSyncTD
	extended parallel time	0.5 second	0.100 to 1.000 sec 0.01 sec increments	CTTS TD XtdParallelTD
7ADTS/B only[2]	delay transition time	0	0 to 5 min 59 sec	DTTS TD LoadDisconnDelay

[1] Time delays do not appear on the display unless you have a 7ACTS or 7ACTB closed–transition transfer switch.

[2] Time delay does not appear on the display unless you have a 7ADTS or 7ADTB delayed–transition transfer switch

[3] Standard adjustment up to 6 seconds (total power outage). For additional time delay contact ASI. **See CAUTION**.

[4] If output contacts required, contact ASI at 1–800–800–2726.

⚠ CAUTION

Do not set Feature 1C TD longer than 6 sec. unless an external 24 V dc power supply is included. Contact ASI if longer than 6 sec. is required.

Time Delay Settings

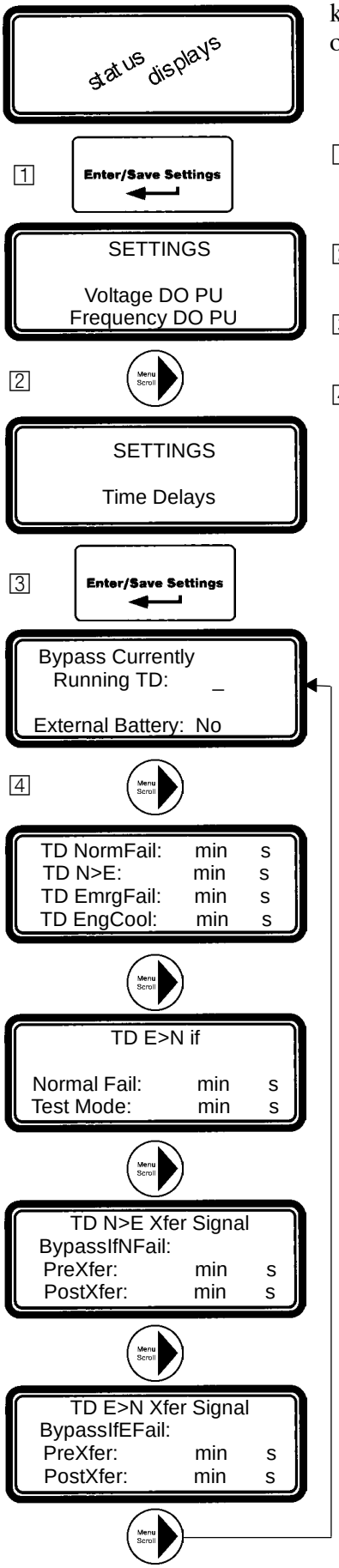

The controller time delay (TD) settings can be displayed and changed from the keypad. Some settings may require a password (if the control panel is set up for one).

1 From any of the **Status** displays, press the **Enter/Save Settings** ↲ key to move to the **Settings** level of menus.

2 Press the **right arrow** ▶ key to move to the **Setting Time Delays** display.

3 Now press **Enter/Save Settings** ↲ key to move to the first **Time Delay** menu.

4 You can press the right arrow ▶ key to see the other time delay menus (as shown below). An overview explanation of each setting is listed below.

5 Time Delay Menus (last menu loops back to first)

Bypass Currently Running TD see page 2–1

This display allows you to bypass some time delays. When the display is set to **Yes** the controller will bypass any of these time delays

Feature 1C — Momentary Normal failure time delay
Feature 2B — Normal to Emergency transfer time delay
Feature 3A — Emergency to Normal transfer time delay

External Battery: see CAUTION on bottom of page 2–4

Yes means external battery connected, Feature 1C can be set longer than 6 sec.
No mean there is no external battery, Feature 1C can be set for 0–6 sec. only

Standard Time Delays see page 2–1

This display shows the settings for the following standard time delays:

Feature 1C — Momentary Normal source failure time delay
Feature 2B — Normal to Emergency transfer time delay
Feature 1F — Momentary Emergency source failure time delay
Feature 2E — Engine cooldown time delay

TD E>N if see page 2–1

This display shows the settings for Feature 3A retransfer to Normal time delay. There are two modes:

Normal source outage — retransfer TD if Normal fails
Transfer Test — retransfer TD if just a test

TD N>E Xfer Signal see page 2–1

This display shows the settings for the time delays used to signal external equipment before and after transfer from Normal to Emergency:

Feature 31F — Pre–transfer time delay signal
Feature 31M — Post–transfer time delay signal

TD E>N Xfer Signal see page 2–1

This display shows the settings for the time delays used to signal external equipment before and after retransfer from Emergency to Normal:

Feature 31G — Pre–transfer time delay signal
Feature 31N — Post–transfer time delay signal

CTTS TDs (not shown) see page 2–1

DTTS TD (not shown) see page 2–1

Features Settings

Unless otherwise specified on the order, the controller features settings are set at the factory to the default values. If a setting must be changed, follow the procedure on the next page. Some settings may require a password (if the controller is set up for one).

⚠ CAUTION

Any indiscriminate change in these settings may affect the normal operation of the Automatic Transfer Switch. This change could allow the load circuits to remain connected to an inadequate source

Feature	Default Setting	Adjustment Range	Display Screen (see next page)
commit to transfer	no	yes or no	Commit to Xfer After TD Norm Fail
shed load direction	from E	from N or from E	SHED LOAD Direction
shed load in phase	no	yes or no	SHED LOAD InPhase
shed load in phase time delay	1.5 second	0 to 3.0 seconds 0.1 sec increments	SHED LOAD TD
shed load isolate load on source failure [2]	yes	yes or no	SHED LOAD IsoLoadOnSrcFail
shed load isolate load on test 17 [2]	no	yes or no	SHED LOAD IsoLoadOnTest17
phase rotation monitor enable [3]	no	yes or no	PHASE ROTATION MONITOR Enable
phase rotation monitor reference [3]	ABC	ABC or CBA	PHASE ROTATION MONITOR Reference
inphase monitor enable [4]	no	yes or no	IN–PHASE MONITOR Enable
inphase monitor time delay [4]	1.5 second	0 to 3.0 seconds 0.1 sec increments	IN–PHASE MONITOR Time Delay
failure to sync auto bypass [1]	no	yes or no	CTTS BYPASS/SHED LD FailSyncAutoByps
bypass time delay [1]	0 second	0 to 59 seconds 1 sec increments	CTTS BYPASS/SHED LD Bypass DT Delay
bypass in phase [1]	no	yes or no	CTTS BYPASS/SHED LD Bypass InPhase

[1] These features do not appear on the display unless you have a 7ACTS or 7ACTB closed–transition transfer switch.

[2] These features do not appear on the display unless you have a 7ACTS or 7ACTB closed–transition transfer switch or a 7ADTS or 7ADTB delayed–transition transfer switch.

[3] These features do not appear on the display unless you both sources have 3 phase sensing enabled.

[4] These features appear only on a 7ATS or a 7ATB (open–transition automatic transfer switch).

Features Settings

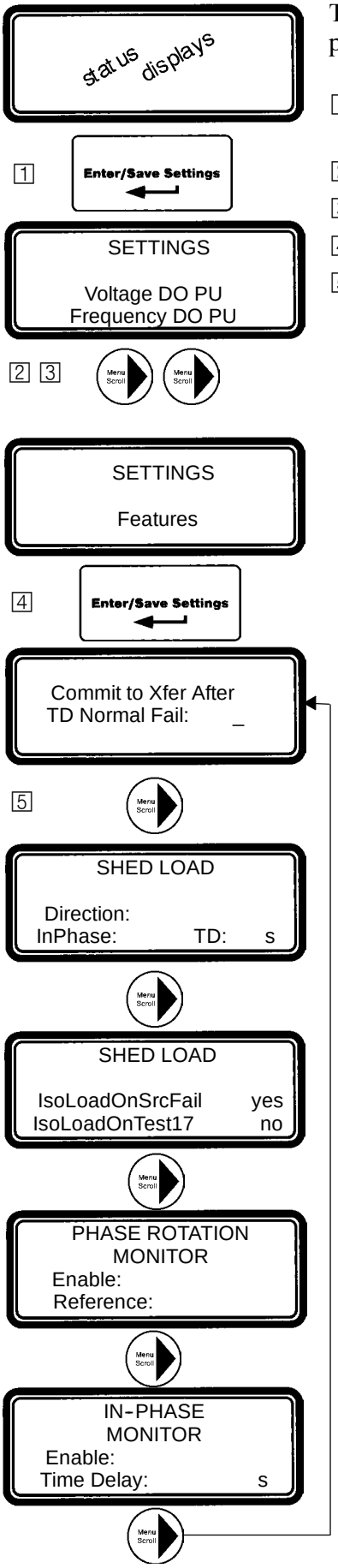

The controller (CP) Features settings can be displayed and changed from the keypad. Some settings may require a password (if the controller is set up for one).

1 From any of the **Status** displays, press the **Enter/Save Settings** ↲ key to move to the **Settings** level of menus.

2 Then press the **right arrow** ▶ key to move to **Setting Time Delays** menu.

3 Press the **right arrow** ▶ key again to move to **Settings Features** menu.

4 Now press **Enter/Save Settings** ↲ key to move to the first **Features** display

5 You can press the right arrow ▶ key to see the other Features menus (as shown below). An overview explanation of each setting is listed below.

7 Features Menus (last menu loops back to first)

Commit to Xfer After TD Normal Fail see page 2–1

This display shows the commit to transfer setting. It affects the transfer sequence as follows:

Yes — If Normal fails, CP continues transfer sequence to emergency even if Normal returns before Emergency becomes acceptable.

No — If Normal fails, CP cancels the transfer sequence to emergency if Normal returns before Emergency becomes acceptable.

Shed Load see page 2–1

This display shows status of 3 load shed parameters:

Direction — from Emergency or from Normal

InPhase — yes means transfer delayed until sources are in phase

TD — 3 second default time delay

Shed Load Options see page 2–1

This display appears only for 7ACTS, 7ACTB, 7ADTS, or 7ADTB. It determines switch position after the shed load transfer.

IsoLoadOnSrcFail — Yes means CP will disconnect the load from the non–load shed source if it fails.

IsoLoadOnTest17 — Yes means CP will isolate the load if Test 17 is active.

Phase Rotation Monitor see page 2–1

This display shows status of phase rotation monitor and desired reference phase rotation. It only appears if both sources are set to 3–phase sensing.

Enabled — Yes means phase rotation is considered as part of the source acceptability criteria for each source. If the phase rotation of the source does not match the reference phase rotation, that source is considered unacceptable. If phase rotation of the two sources is different, the load will be transferred to the source with the reference phase rotation.

Reference — phase rotation order: ABC or CBA (ABC is default)

In–Phase Monitor see page 2–1

This display appears only for 7ATS or 7ATB. This display shows status of in–phase monitor and in–phase time delay (1.5 seconds is default setting).

Enabled — Yes means in–phase transfer is initiated when any of these conditions are met: Transfer Test (Feature 5) signal, connected source fails, retransfer to acceptable Normal occurs and Emergency source acceptable.

CTTS Bypass / Shed Load (not shown) see page 2–1

This display shows status of the closed–transition bypass options.

FailSyncAutoBypass — Yes means if the fail to sync alarm occurs, the controller will bypass the closed–transition mode and will make a delayed–transiton transfer. The load disconnect time is set by the **Bypass DT Delay** parameter.

Bypass InPhase — Yes means the inphase monitor is active during load transfer.

General Settings

Unless otherwise specified on the order, the controller general settings are set at the factory to the default values. If a setting must be changed, follow the procedure on the next page. Some settings may require a password (if the controller is set up for one).

⚠ CAUTION

Any indiscriminate change in these settings may affect the normal operation of the Automatic Transfer Switch. This change could allow the load circuits to remain connected to an inadequate source

Parameter	Default Setting	Adjustment Range	Display Screen (see next page)
language	ENGLISH*	ENGLISH FRENCH CDN ENGLISH EU ENGLISH EU S1–S2 ENGLISH S1–S2* SPANISH GERMAN PORTUGUESE	Menu Language ENGLISH
serial communications baud rate	19.2k	off, x9600, 9600, 19.2k, Mbus9600, Mbus19.2k	SERIAL COMMUNICATION Baud Rate
serial communications address	1	0 to 63	SERIAL COMMUNICATION Address
event log enable	no	yes or no	EVENT LOGGING Enable
print enable	no	yes or no	EVENT LOGGING Print Enable
clear log	no	yes or no	EVENT LOGGING Clear Log
password	1111	4 characters letters or numbers	Change Password

* **Note**: If the language setting *ENGLISH S1–S2* is selected the usual display words *Normal (N)* and *Emergency (E)* are changed to *Source 1 (S1)* and *Source 2 (S2)*.

General Settings

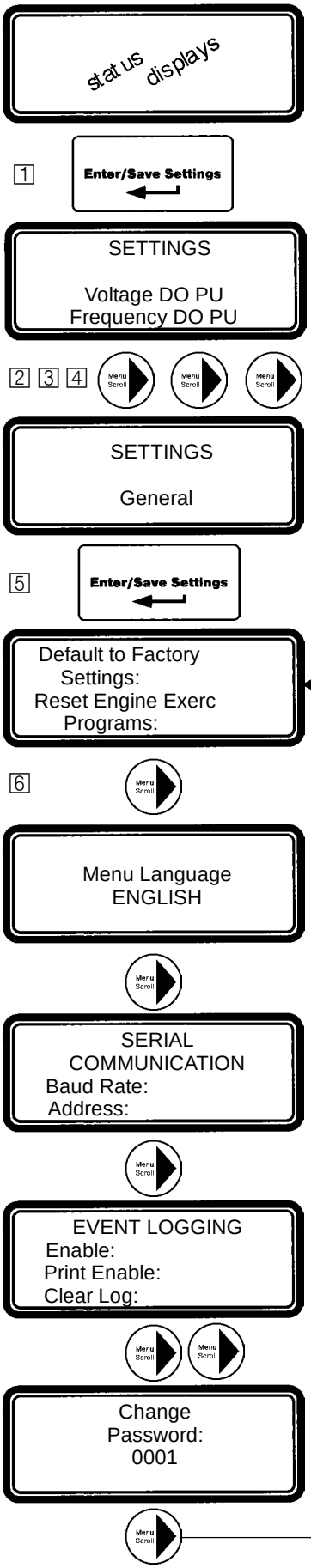

The controller (CP) general setting can be displayed and changed from the keypad. Some settings may require a password (if the controller is set up for one).

1 From any of the **Status** displays, press **Enter/Save Settings** ↲ key to move to the **Settings** level of menus.

2 Press the **right arrow** ▶ key to move to **Setting Time Delays** menu.

3 Press the **right arrow** ▶ key again to move to **Settings Features** menu.

4 Press the **right arrow** ▶ key again to move to **Settings General** menu.

5 Now press **Enter/Save Settings** ↲ key to move to the first **General** display

6 You can press the right arrow ▶ key to see the other General menus (as shown below). An overview explanation of each setting is listed below.

6 General Settings Menus (last menu loops back to first)

Default to Factory Settings see page 2–1

This display (upper half) allows the user to reset the majority of controller settings to their factory default values.

Reset Engine Exerc Programs see page 2–1

This display (lower half) also allows the user to reset the engine exerciser routines. YES means reset. NO means do not reset.

Menu Language see page 2–1

This display shows the language in which the messages will be shown.
English is the default language.

Serial Communication see page 2–1

This display allows the user to configure the serial communications port of the controller.

Baud Rate — off, 9600, x9600. 19.2 k, Mbus9600, Mbus19.2k
x9600 selects 9600 and the Group 1/7 CP protocol
Address — can be set from 0 to 63

Event Logging see page 2–1

This display allows the user to enable the event logging feature of the controller and to clear the event log.

Enable — YES means to start event logging; NO means turn it off.
Print Enable — YES means enables printer option; NO turns it off.
Clear Log — YES means erase the event log; NO means keep it.

Print Event Log (not shown) see page 2–1

This display shows the status of the optional printer.
Also see Printer Interface Module instructions 381339–218.

Change Password see page 2–1

This display allows the user to change the controller password.

Engine Exerciser Settings

Unless otherwise specified on the order, the controller engine exerciser settings are set at the factory to the default values. If a setting must be changed, follow the procedure on the next page. Some settings may require a password (if the controller is set up for one).

⚠ CAUTION

Any indiscriminate change in these settings may affect the normal operation of the Automatic Transfer Switch. This change could allow the load circuits to remain connected to an inadequate source

Parameter	Default Setting	Adjustment Range	Display Screen (see next page)
month	JAN	JAN, FEB, MAR, APR, MAY, JUN, JUL, AUG, SEP, OCT, NOV, DEC	PRESENT DATE/TIME Date
day	1	1 to 31	PRESENT DATE/TIME Date
year *	1	00 to 99	PRESENT DATE/TIME Date
hour	1	0 to 23	PRESENT DATE/TIME Time
minute	1	0 to 59	PRESENT DATE/TIME Time
engine exerciser enable (P1 to P7)	no	yes or no	P1 ENGINE EXERCISER Enable
engine exerciser transfer load (P1 to P7)	no	yes or no	P1 ENGINE EXERCISER wLoad
engine exerciser start hour (P1 to P7)	0	0 to 23	P1 ENGINE EXERCISER Start h
engine exerciser start minute (P1 to P7)	0	0 to 59	P1 ENGINE EXERCISER Start min
engine exerciser run week (P1 to P7)	all	all, alternate, first, second, third, fourth, or fifth	
engine exerciser run day (P1 to P7)	SUN	SUN, MON, TUE, WED, THU, FRI, SAT	
engine exerciser duration hours (P1 to P7)	0	0 to 23	P1 ENGINE EXERCISER Run TIme h
engine exerciser duration minutes (P1 to P7)	0	0 to 59	P1 ENGINE EXERCISER Run TIme min

* For the year 2000, enter 00.

Engine Exerciser Settings

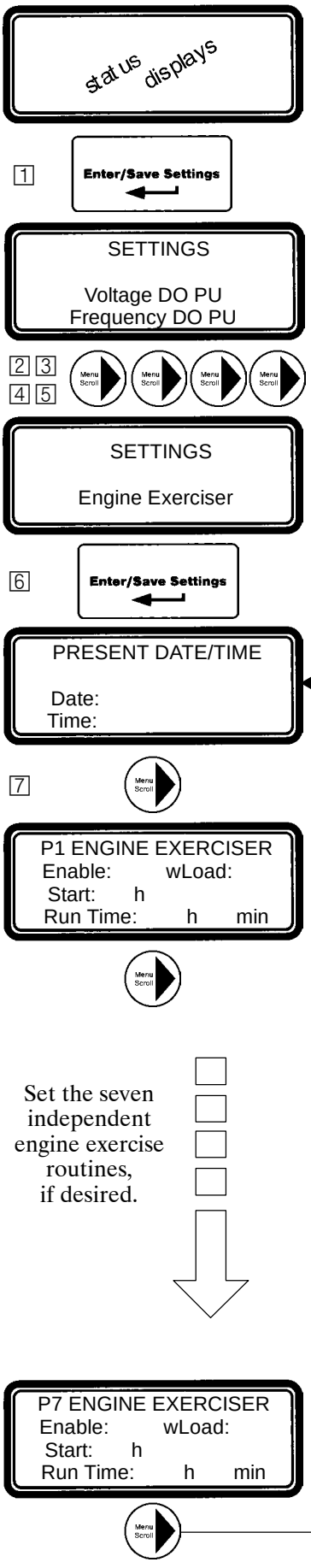

The controller (CP) engine exerciser setting can be displayed and changed from the keypad. Some settings may require a password (if the controller is set up for one).

1 From any of the **Status** displays, press **Enter/Save Settings** ↲ key to move to the **Settings** level of menus.

2 Press the **right arrow** ▶ key to move to **Setting Time Delays** menu.

3 Press the **right arrow** ▶ key again to move to **Settings Features** menu.

4 Press the **right arrow** ▶ key again to move to **Settings General** menu.

5 Press the **right arrow** ▶ key again to move to **Settings Engine Exerciser**.

6 Now press **Enter/Save Settings** ↲ key to move to the first **Engine Exerciser** menu.

7 You can press the right arrow ▶ key to see the other Engine Exerciser menus (as shown below). An overview explanation of each setting is listed below.

8 Engine Exerciser Settings Menus
(last menu loops back to first)

Present Date/Time see page 2–1
This display allows the user to change the controller date and time.

P(1—7) Engine Exerciser(s) see page 2–1
These displays (P1 through P7) allow the user to set the controller's seven independent engine exerciser routines. Each routine functions in the same manner. Six parameters need to be configured for each routine (P1, P2, P3, P4, P5, P6, P7 — not all have to be used).

Enable — YES enables the routine; NO turns it off.

wLoad — YES transfers load to Emergency; NO = no transfer.

Start — when the routine will start the generator
- time (hour, minute)
- week (all, alternate, 1st, 2nd, 3rd, 4th, or 5th week)
- day of the week (mon, tue, wed, thu, fri, sat, sun)

Run Time — duration (length of time) that the generator will run.

View Event Log

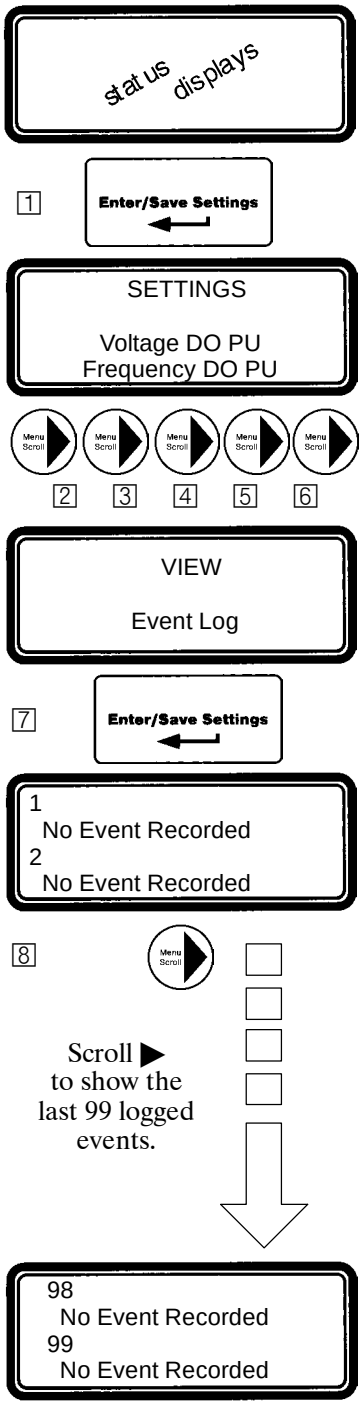

The controller event logging feature can be displayed from the keypad. Some settings may require a password (if the controller is set up for one).

1 From any of the **Status** displays, press **Enter/Save Settings** ↲ key to move to the **Settings** level of menus.

2 Press the **right arrow** ▶ key to move to **Setting Time Delays** menu.

3 Press the **right arrow** ▶ key again to move to **Settings Features** menu.

4 Press the **right arrow** ▶ key again to move to **Settings General** menu.

5 Press the **right arrow** ▶ key again to move to **Settings Engine Exerciser**.

6 Press the **right arrow** ▶ key again to move to **View Event Log**.

7 Now press **Enter/Save Settings** ↲ key to move to the events logged display.

8 You can press the right arrow ▶ key to see the other events logged. An overview explanation of each setting is listed below.

Logged Events

This display shows the last 99 logged events. Each event display shows the event number (1 is the most recent, 99 is the oldest), the time and date of the event, the event type, and the event reason (if applicable).

Event Types

Nine types of events are logged. They are (displayed event & meaning) :

Eng Start	The controller has signaled the engine to start
Xfer N>E	The controller has initiated transfer from normal to emergency
Xfer E>N	The controller has initiated transfer from emergency to normal
Eng Stop	The controller has signaled the engine to stop
EmergAcc	The emergency source has become acceptable
EmergNAcc	The emergency source has become not acceptable
NormAcc	The normal source has become acceptable
NormNAcc	The normal source has become not acceptable
XfrAbort	The transfer has been aborted

Event Reasons

Twenty–one reasons for events are logged. They are (displayed reason & meaning):

LoadShed	Load shed requested		
NormFail	Normal source failure	NormOF	Normal source over frequency
ManualXfr	Manual transfer	NormPHR	Normal source phase rotation
Test 5	Test requested (Feature 5)	NormVUNB	Normal source voltage unbalance
Test 17	Test requested (Feature 17)	EmergUV	Emergency source under voltage
Comm	Serial communications	EmergOV	Emergency source over voltage
EngExerc	Engine Exerciser	EmergUF	Emergency source under frequency
EmergFail	Emerg source failure	EmergOF	Emergency source over frequency
NormUV	Normal source under voltage	EmergPHR	Emergency source phase rotation
NormOV	Normal source over voltage	EmergVUNB	Emergency source voltage unbalance
NormUF	Normal source under frequency	Feature 6	Feature 6 activated

Service — Statistics / Diagnostics

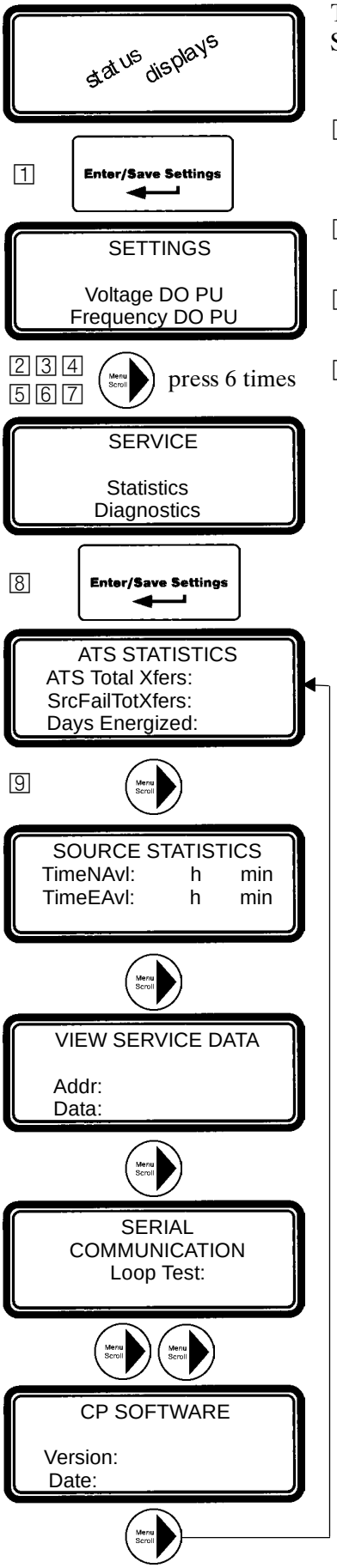

The controller service statistics / diagnostics can be displayed from the keypad. Some settings may require a password (if the controller is set up for one).

1 From any of the **Status** displays, press **Enter/Save Settings** ↲ key to move to the **Settings** level of menus.

2 3 4 5 6 7 Press **right arrow** ▶ key <u>six times</u> to move to **Service** menu.

8 Now press **Enter/Save Settings** ↲ key to move to the first **Service** menu.

9 You can press the right arrow ▶ key to see the other Service menus (as shown below). An overview explanation of each setting is listed below.

7 Service Menus (last menu loops back to first)

ATS Statistics

This display shows the total number of transfers, the total number of transfers due to source failures, and the total number of days that the ATS has been energized since the controller has been installed. These values cannot be reset.

Source Statistics

This display shows the total time that the normal and emergency sources have been acceptable since installation of the controller. These values cannot be reset.

View Service Data

This display is for service personnel only.

Serial Communication

This display allows the user to test the serial communications port of the controller. To perform the test, the transmit lines of the serial communications port are connected to the receive lines so that the signals sent by the controller are also received by the controller. The test is activated by pressing the **Enter/Save Settings** ↲ key while viewing this display. If the controller receives the same information that it sent, test is passed, otherwise it fails.

I/O Status (not shown)

These displays show the status of several of the controller's input and output lines.

CP Software

This display shows the version of the loaded software and the date of its release.

Service — Factory Selectable Features

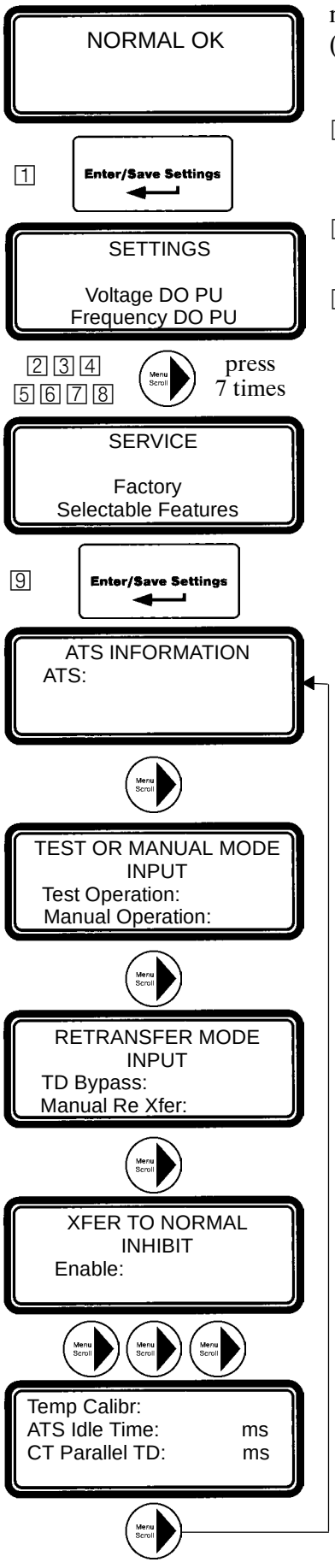

The controller service factory selectable features can be displayed from the membrane controls. These factory settings should not be changed by the customer (they cannot be changed without entering the factory password).

1 From the **ATS Status** display (NORMAL OK), press **Enter/Save Settings** ↲ button to move down to the **Settings** level of menus.

2 3 4 5 6 7 8 Press **right arrow** ▶ button 7 times to move to **Service** menu.

9 Now press **Enter/Save Settings** ↲ button to move down to the first **Service** factory selectable feature.

You can press the right arrow ▶ button to see the other Service menus (as shown below). An overview explanation of each setting is listed below.

8 Service Menus (last menu loops back to first)

ATS Information

This display shows the transfer switch ampere size, whether the switch is a bypass switch or a non–bypass switch, and any name or description inform–ation that has been assigned to it through the serial communications port.

Test or Manual Mode Input

This display shows the setting of the Feature 5/6Z input. This input can be used for either Feature 5 or 6Z. Yes means active; no means not used.

Test Operation — Feature 5

Manual Operation — Feature 6Z

This Feature is not available for automatic operation.

Retransfer Mode Input

This display shows the settings for Features 6B/6C inputs. This input can be used for either Feature 6B or 6C. Yes means active; no means not used.

TD Bypass — Feature 6B

Manual Re Xfer — Feature 6C

These Features are typically set to *Yes* with the inhibit Feature overridden with external factory wiring. These Features are not available for customer use.

Xfer to Normal Inhibit and Emergency (not shown)

This display shows whether the Feature 34A input is enabled (yes) or disabled (no).

Likewise, the next display **Xfer to Emerg** shows whether the Feature 34B input is enabled (yes) or disabled (no).

Factory Calibration (not shown)

This display is for factory calibration only and should be used by factory personnel only.

Other

These displays show various parameters that should be accessed by factory personnel only.

Status Information

The controller (CP) provides the status of the automatic transfer switch (ATS) and of both the normal and emergency sources. This information is at the *status level* of all screens and no password is required to view them.

You can press the right arrow ▶ key to see the status of the Normal Source or press the left arrow ◀ key to see the status of the Emergency source (the menus loop back).

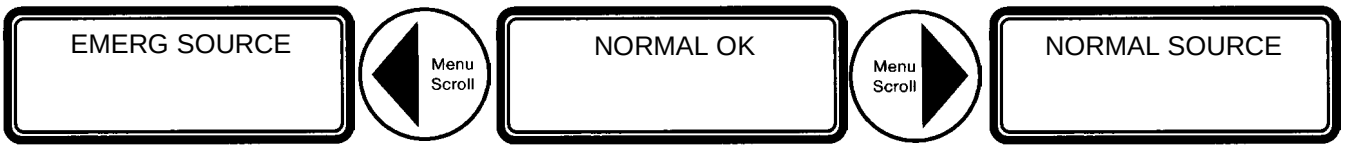

ATS Status

The ATS Status is the primary display. It shows the present status of the ATS. Transfer sequence status and running time delays are shown. For inphase or closed–transition transfers, phase relation between the sources is also shown.

Tip ☞

The ATS Status display can be directly reached from anywhere in the menu structure by pressing the *Esc* key three times.

Normal Source Status

The Normal Source Status display shows the rms voltage of each of the phases, the source frequency in Hz, and the phase rotation. If enabled, the voltage unbalance will also be displayed.

Emergency Source Status

The Emergency Source Status display shows the rms voltage of each of the phases, the source frequency in Hz, and the phase rotation. If enabled, the voltage unbalance will also be displayed.

Source Acceptability

The CP considers a source unacceptable if any of these conditions are true:

- Any phase voltage of the source is less than the voltage dropout setting.
- Any phase voltage is greater than voltage trip setting for more than 3 sec.
- Frequency of the source is less than the frequency dropout setting.
- Frequency is greater than frequency trip setting for more than 3 seconds.
- Phase rotation does not match specified phase rotation (only if enabled).
- The phase unbalance is greater than the unbalance dropout setting (only if enabled).

The CP considers a source acceptable again when all these conditions are true:

- Each phase voltage is greater than the voltage pickup setting.
- Each phase voltage is less than trip voltage setting by more than 2% of nom
- The frequency of the source is greater than the frequency pickup setting.
- Frequency is less than the frequency trip setting by more than 2% of nom.
- Phase rotation matches the specified phase rotation (only if enabled).
- The phase unbalance is less than the unbalance pickup setting (only if enabled).

Display Messages and their Meaning

The following messages (in alphabetical order) can appear on the CP display:

Display Message	Meaning or Explanation	Also Refer To
ATS LOCKED OUT!	An error condition has occurred and the controller has locked out all further attempts to transfer the load. Press the Alarm Reset pushbutton to clear this message.	Transfer Switch Operator's Manual
EMERG SOURCE	The emergency status display shows the emergency voltages, voltage unbalance (if enabled), and frequency.	page 3–1
ENGINE EXERCISE WITH LOAD	The engine exerciser is running the engine–generator set with load (the transfer switch transfers the load to the generator).	pages 2–10, 2–11
ENGINE EXERCISE WITHOUT LOAD	The engine exerciser is running the engine–generator set without load (the transfer switch does not transfer the load to the generator).	pages 2–10, 2–11
Enter Password:	A password is required to proceed further in the change process. Enter the correct password to continue or press the **Esc** key to clear this message.	pages 2–1, 2–8
FAILURE TO SYNCHRONIZE ALARM	The failure to synchronize time delay has expired. This alarm occurs when the sources fail to synchronize within the specified time. Press the Alarm Reset pushbutton to clear this message. (ACTS, 7ACTB)	pages 4–4, 4–5
Load Disconnected	The load is disconnected (7ADTS, 7ADTB)	pages 4–6, 4–7
Load on Emerg	The load is connected to the emergency source.	
Load on Normal	The load is connected to the normal source.	
LOAD SHED FROM EMERG	The load shed signal is active and the load has been shed from the emergency source.	page 2–6
LOAD SHED FROM NORMAL	The load shed signal is active and the load has been shed from the normal source.	page 2–6
NORMAL FAILED	The normal source is not acceptable.	page 3–1
NORMAL OK	The normal source is accepted.	page 3–1
NORMAL SOURCE	The normal status display shows the normal source voltages, voltage unbalance (if enabled), and frequency.	page 3–1
POWER–UP INHIBIT *stays on*	The controller has powered up and has recognized an error condition.	Contact ASI
TD Emerg>Normal:	The emergency to normal load transfer time delay (Feature 3A) is running. The amount of time remaining is shown.	page 2–4
TD Engine Cooldown:	The engine–generator set unloaded cooldown time delay (Feature 2E) is running. The amount of time remaining is shown.	page 2–4
TD Load Disconnect:	The load disconnect time delay is running. The amount of time remaining is shown. (7ADTS, 7ADTB)	pages 4–6, 4–7

continued on next page

Display Messages and their Meaning (continued)

The following messages (in alphabetical order) can appear on the CP display:

Display Message	Meaning or Explanation	Also Refer To
TD Normal Fail:	The normal source failure time delay (Feature 1C) is running. The amount of time remaining is shown.	page 2–4
TD Normal>Emerg:	The normal to emergency load transfer time delay (Feature 2B) is running. The amount of time remaining is shown.	page 2–4
TD Post Transfer	The post–transfer time delay (Feature 31M or 31N) is running. The amount of time remaining is shown.	page 2–4
TD Pre Transfer	The pre–transfer time delay (Feature 31F or 31G) is running. The amount of time remaining is shown.	page 2–4
TEST MODE SERIAL COMM	A test has been initiated via the serial communications port.	page 2–13
TEST MODE TEST CIRCUIT 5	Test circuit Feature 5 is active (**Transfer Test**).	Transfer Switch Operator's Manual
TEST MODE TEST CIRCUIT 17	Test circuit Feature 17 is active (remote test).	page 2–6
Transfer to Emerg Inhibited	Load transfer to emergency is inhibited.	
Transfer to Normal Inhibited	Load transfer to normal source is inhibited.	
Waiting for Emerg Acceptable	The controller is waiting for the emergency source to become acceptable so that it can continue in the transfer sequence.	page 3–1
Waiting for In–Phase	The controller is waiting for the sources to come in phase so that it can make an in phase load transfer. The phase angle and frequency difference are also displayed. This message will be displayed until the sources come in phase. (7ATS, 7ATB)	pages 4–1, 4–2
Waiting for In–Sync	The controller is waiting for the sources to come into synchronism so that it can make a closed–transition load transfer. The three parameters required for synchronization (phase angle, frequency difference, and voltage difference) are also displayed. If the sources do not have the same rotation, this will also be displayed. (7ACTS, 7ACTB)	pages 4–4, 4–5
WRONG PASSWORD !!!	An incorrect password has been entered.	page 2–1
XTD PARALLEL ALARM	The extended parallel time delay has expired, which indicates that the sources have been paralleled for longer than the specified extended parallel time. Press the Alarm Reset pushbutton to clear this message. (7ACTS, 7ACTB)	pages 4–4, 4–5
PARM CHCKSUM ERROR	An internal memory error has been detected. On occurance of this error message, memory is cleared and all parameters need to be reset.	Contact ASI
UNKNOWN ERROR	System error.	Contact ASI

Open–Transition (2–position) Automatic Transfer (7ATS, 7ATB)

Load Transfer To Emergency



The sequence for load transfer to the emergency source begins automatically when the controller detects a normal source failure or a transfer test signal.

Normal Source Failure. The Normal source is considered unacceptable when any one of six voltage, frequency, or phase rotation conditions occur (see page 3–1).

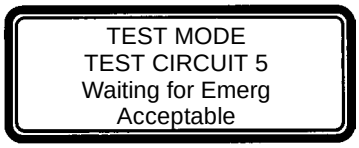

Transfer Test Signal. Test transfer signal can be from the **Transfer Control** switch (Feature 5), the engine–generator exerciser clock (Feature 11C), or via the serial port (Feature 72A). When using the **Transfer Control** switch, it must be held in the *Transfer Test* position until the emergency source becomes available (within 15 seconds).

The controller begins the load transfer sequence by de–energizing the SE relay and starting the Feature 1C time delay. Feature 1C time delay on engine starting prevents nuisance starting of the engine–generator set and load transfer to emergency due to momentary failures of the normal source. If the normal source is restored (voltage returns above the dropout point) while Feature 1C time delay is running, the SE relay is re–energized and the transfer sequence is terminated. (For transfer test the Feature 1C time delay is bypassed.)

Engine Start Signal. When the Feature 1C time delay ends, the controller de–energizes the NR relay which signals the engine–generator to start. The controller monitors the emergency source, waiting for it to become acceptable. Usually about 10 seconds elapse from dropout of the NR relay to acceptance of the emergency source. This interval occurs because the engine–generator must crank, start, and run up to nominal pickup points. If the emergency source is available immediately, the controller will accept it as soon as the NR relay drops out.

When the emergency source becomes acceptable, the controller starts the Feature 2B time delay on transfer to emergency (if desired). Feature 2B time delay allows the emergency source to stabilize before load transfer. If the emergency source fails while Feature 2B time delay is running, the controller again waits for the emergency source to become acceptable again and restarts Feature 2B.

Feature 31F

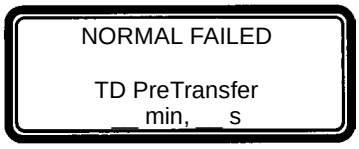

At the conclusion of the Feature 2B time delay, the controller is ready to transfer the load to emergency. If enabled, Feature 31F time delay will run prior to transfer and the Feature 31 output will be active while the time delay runs. Also, if Feature 27 inphase monitor control (for motor loads) is enabled, the controller will inhibit transfer until the sources are in phase.

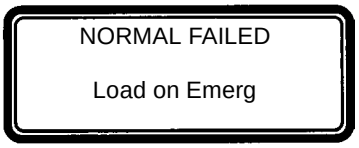

Load Transfer. To transfer the load to the emergency source the controller energizes ER relay. The transfer switch TS coil energizes, and all transfer switch contacts (mains, controls, auxiliaries) reverse position. Transfer switch is now supplying the load from emergency source.

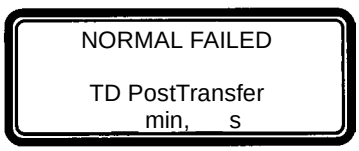

If enabled, Feature 31M time delay will run after the transfer and the Feature 31 output will be active while the time delay runs.

Feature 31M

Open–Transition (2–position) Automatic Transfer Switches continued

Load Retransfer To Normal

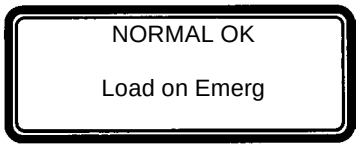

The sequence for load retransfer to the normal source begins automatically when the controller detects a restored normal source or a cancelled transfer test signal.

Normal Source Restoration. The Normal source is considered acceptable again when all six voltage, frequency, or phase rotation conditions occur (see page 3–1).

Cancel Transfer Test. Removal of the test transfer signal can be by the **Transfer Control** switch (Feature 5), engine–generator exerciser clock (Feature 11C), or via serial port (Feature 72A). When using the **Transfer Control** switch, it must be released from the *Transfer Test* position.

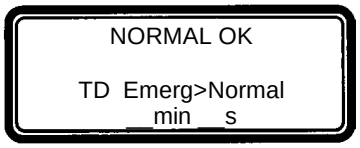

The controller begins the load retransfer sequence by starting the Feature 3A time delay. Feature 3A time delay on retransfer to normal allows the normal source to stabilize. If the normal source fails while the Feature 3A time delay is running, the controller waits for the normal source again to become acceptable and restarts the Feature 3A time delay. If the emergency source fails while Feature 3A is running, the controller bypasses the time delay for immediately load retransfer. To bypass Feature 3A time delay, turn the **Transfer Control** switch to the *Retransfer Delay Bypass* position.

At the conclusion of the Feature 3A time delay, the controller is ready to transfer the load to normal. If Feature 27 inphase monitor control is enabled, the controller will inhibit transfer until the sources are in phase.

Load Retransfer. To retransfer the load to the normal source the controller de–energizes ER relay and energizes SE relay. The transfer switch TS coil energizes, and all transfer switch contacts (mains, controls, auxiliaries) reverse position. The transfer switch is now supplying the load from the normal source again

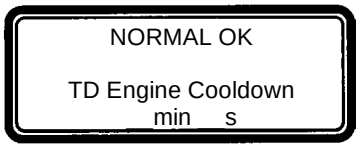

Engine Cooldown & Stop. After load retransfer to the normal source, the controller starts Feature 2E time delay. Feature 2E time delay provides an unloaded cooldown running period for the engine–generator. At the end of the time delay, the controller energizes the NR relay and the engine–generator is signalled to shutdown.

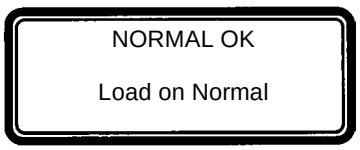

Closed–Transition Automatic Transfer (7ACTS, 7ACTB)

The 7ACTS and 7ACTB provides load transfer in either closed (make–before–break) or open (break–before–make) transition modes depending upon the condition of the two power sources. Control logic automatically determines whether the load transfer should be open or closed transition. If both sources are acceptable, such as during a transfer test or when retransferring back to Normal, closed–transition transfer occurs without interrupting the electrical loads. If either source is not present, such as when normal fails, open–transition load transfer occurs in the break–before–make mode.

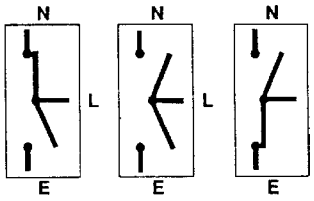

Open–Transition Load Transfer to Emergency Source due to Normal Source Failure

The sequence for open–transition load transfer to the emergency source begins automatically when the controller detects an unacceptable normal source. The Normal source is considered unacceptable when any one of six voltage, frequency, or phase rotation abnormal conditions occur (see page 3–1).

NORMAL FAILED

Normal Source Failure. An under voltage condition on any phase of the normal source means that the voltage has fallen below the preset dropout point.

The controller begins the load transfer sequence by de–energizing the SE and SE2 relays and starting the Feature 1C time delay. Feature 1C time delay on engine starting prevents nuisance starting of the engine–generator set and load transfer to emergency due to momentary failures of the normal source. If the normal source is restored (voltage returns above the dropout point) while Feature 1C time delay is running, the SE and SE2 relays are re–energized and the transfer sequence is terminated. (For transfer test the Feature 1C time delay is bypassed.)

Engine Start Signal. When the Feature 1C time delay ends, the controller de–energizes the NR relay which signals the engine–generator to start. The controller monitors the emergency source, waiting for it to become acceptable. Both voltage and frequency must reach preset pickup points before the emergency source is accepted. Usually about 10 seconds elapse from dropout of the NR relay to acceptance of the emergency source. This interval occurs because the engine–generator must crank, start, and run up to nominal pickup points. If the emergency source is available immediately, the controller will accept it as soon as the NR relay drops out.

When the emergency source becomes acceptable, the controller starts the Feature 2B time delay on transfer to emergency (if desired). If the emergency source fails while Feature 2B time delay is running, the controller again waits for the emergency source to become acceptable again and restarts Feature 2B.

At the conclusion of the Feature 2B time delay, the controller is ready to transfer the load to emergency. If enabled, Feature 31F time delay will run prior to transfer and the Feature 31F output will be active while the time delay runs.

TEST MODE
TEST CIRCUIT 5
Load on Emerg

Load Transfer. To transfer the load to the emergency source the controller energizes the ER relay. The transfer switch CN coil energizes, and all CN transfer switch contacts (mains, controls, auxiliaries) reverse position to disconnect the Normal source. Then the controller energizes the ER2 relay. The transfer switch CE coil energizes, and all CE transfer switch contacts (mains, controls, auxiliaries) reverse position to connect the Emergency source. The transfer switch is now supplying the load from emergency source. If enabled, Feature 31M time delay will run after the transfer and the Feature 31M output will be active while the time delay runs.

Closed–Transition Automatic Transfer Switches continued

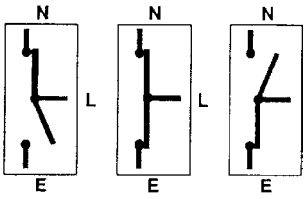

TEST MODE
TEST CIRCUIT 5
Waiting for Emerg
Acceptable

Closed–Transition Load Transfer to Emergency Source due to Transfer Test

The sequence for closed–transition load transfer to the emergency source begins automatically when the controller detects a transfer test signal.

Transfer Test Signal. Test transfer signal can be from the **Transfer Control** switch (Feature 5), the engine–generator exerciser clock (Feature 11C), or via the serial port (Feature 72A). When using the **Transfer Control** switch, it must be held in the *Transfer Test* position until the emergency source becomes available (within 15 seconds).

The controller begins the load transfer sequence by de–energizing the SE, SE2, and NR relays. Feature 1C engine starting time delay is bypassed during transfer test.

Engine Start Signal. When the NR relay de–energizes it signals the engine–generator to start. The controller monitors the emergency source, waiting for it to become acceptable. Both voltage and frequency must reach preset pickup points before the emergency source is accepted. Usually about 10 seconds elapse from dropout of the NR relay to acceptance of the emergency source. This interval occurs because the engine–generator must crank, start, and run up to nominal pickup points. If the emergency source is available immediately, the controller will accept it as soon as the NR relay drops out.

When the emergency source becomes acceptable, the controller starts the Feature 2B time delay on transfer to emergency (if desired). If the emergency source fails while Feature 2B time delay is running, the controller again waits for the emergency source to become acceptable again and restarts Feature 2B.

At the conclusion of the Feature 2B time delay, the controller starts the synchronization time delay which allows both sources to stabilize. After the synchronization time delay, the controller starts the in–sync monitor. Three criteria must be met for the sources to be considered in–sync. The phase difference between the sources must be less than 5 degrees, the frequency difference must be less than 0.2 Hz, and the voltage difference must be less than 5%. These parameters are displayed. The controller waits for the sources to become in–sync. At the same time, the failure to sync time delay is running. If the failure to sync time exceeds the user selected time, the failure to sync output is activated and remains active until it is reset via the alarm reset. The controller continues the transfer sequence even after the failure to synchronize alarm becomes active.

TEST MODE
TEST CIRCUIT 5
Load on Emerg

When the sources become in–sync the controller is ready to transfer the load to emergency.

Load Transfer. To transfer the load to the emergency source the controller energizes the ER2 relay. The transfer switch CE coil energizes, and all CE transfer switch contacts (mains, controls, auxiliaries) reverse position. The load is connected to both the Normal and Emergency sources. The extended parallel time delay is started and the controller energizes the ER relay. The transfer switch CN coil energizes, and all CN transfer switch contacts (mains, control, auxiliaries) reverse position to disconnect the Normal source. The load is now only connected to the Emergency source. If the sources are paralleled longer than the extended parallel time setting the controller activates an extended parallel output. It also deenergizes the ER and ER2 relays, energizes the SE and SE2 relays, and it locks out any further transfer operations. This lock–out condition is reset via the alarm reset.

Closed–Transition Automatic Transfer Switches continued

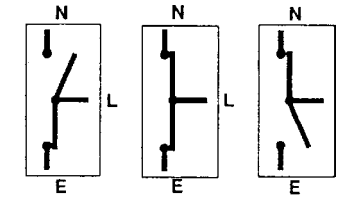

NORMAL OK

Load on Emerg

NORMAL OK

TD Emerg>Normal
__min __s

NORMAL OK

TD Engine Cooldown
__min __s

NORMAL OK

Load on Normal

Closed–Transition Load Retransfer To Normal

The sequence for load retransfer to the normal source begins automatically when the controller detects a restored normal source or a cancelled transfer test signal.

Normal Source Restoration. The Normal source is considered acceptable again when all six voltage, frequency, or phase rotation conditions occur (see page 3–1).

Cancel Transfer Test. Removal of the test transfer signal can be by the **Transfer Control** switch (Feature 5), engine–generator exerciser clock (Feature 11C), or via serial port (Feature 72A). When using the **Transfer Control** switch, it must be released from the *Transfer Test* position.

The controller begins the load retransfer sequence by starting the Feature 3A time delay. Feature 3A time delay on retransfer to normal allows the normal source to stabilize. If the normal source fails while the Feature 3A time delay is running, the controller waits for the normal source again to become acceptable and restarts the Feature 3A time delay. If the emergency source fails during while Feature 3A is running, the controller bypasses the time delay for immediately load retransfer. To bypass Feature 3A time delay, turn the **Transfer Control** switch to the *Retransfer Delay Bypass* position.

At the conclusion of the Feature 3A time delay, the controller starts the synchronization time delay which allows both sources to stabilize. After the synchronization time delay the controller starts the in–sync monitor and the failure to sync time delay. When the sources become in–sync the controller is ready to transfer the load to normal.

Load Retransfer. To retransfer the load to the normal source the controller de–energize the ER and ER1 relays and energizes the SE relay. The transfer switch CN coil energizes, and all CN transfer switch contacts (mains, controls, auxiliaries) reverse position to connect the Normal source. The load is now connected to both sources. The extended parallel time delay is started and the SE2 relay is energized. The transfer switch CE coil energizes, and all CE transfer switch contacts (mains, controls, auxiliaries) reverse position to disconnect the Emergency source. The transfer switch is now supplying the load from the normal source again. If the sources are paralleled longer than the extended parallel time setting the controller activates an extended parallel output. It also deenergizes the SE and SE2 relays, energizes the ER and ER2 relays, and it locks out any further transfer operations. This lock–out condition is reset via the alarm reset.

Engine Cooldown & Stop. After load retransfer to the normal source, the controller starts Feature 2E time delay. Feature 2E time delay provides an unloaded cooldown running period for the engine–generator. At the end of the time delay, the controller energizes the NR relay and the engine–generator is signalled to shutdown.

Bypass Closed–Transition Load Transfer

A pending closed–transition load transfer can be bypassed by using the Closed Transition Bypass switch. Depending upon the configuration of the controller, bypassing the closed–transition load transfer sequence will result in either an open or delayed–transition transfer.

Delayed–Transition Automatic Transfer (7ADTS, 7ADTB)

Load Transfer To Emergency



The sequence for load transfer to the emergency source begins automatically when the controller detects a normal source failure or a transfer test signal.

Normal Source Failure. The Normal source is considered unacceptable when any one of six voltage, frequency, or phase rotation conditions occur (see page 3–1).

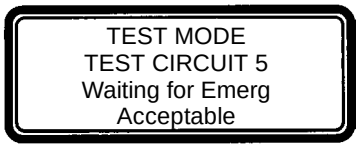

Transfer Test Signal. Test transfer signal can be from the **Transfer Control** switch (Feature 5), the engine–generator exerciser clock (Feature 11C), or via the serial port (Feature 72A). When using the **Transfer Control** switch, it must be held in the *Transfer Test* position until the emergency source becomes available (within 15 seconds).

The controller begins the load transfer sequence by de–energizing the SE and SE2 relays and starting the Feature 1C time delay. Feature 1C time delay on engine starting prevents nuisance starting of the engine–generator set and load transfer to emergency due to momentary failures of the normal source. If the normal source is restored (voltage returns above the dropout point) while Feature 1C time delay is running, the SE and SE2 relays are re–energized and the transfer sequence is terminated. (For transfer test the Feature 1C time delay is bypassed.)

Engine Start Signal. When the Feature 1C time delay ends, the controller de–energizes the NR relay which signals the engine–generator to start. The controller monitors the emergency source, waiting for it to become acceptable. Both voltage and frequency must reach preset pickup points before the emergency source is accepted. Usually about 10 seconds elapse from dropout of the NR relay to acceptance of the emergency source. This interval occurs because the engine–generator must crank, start, and run up to nominal pickup points. If the emergency source is available immediately, the controller will accept it as soon as the NR relay drops out.

When the emergency source becomes acceptable, the controller starts the Feature 2B time delay on transfer to emergency (if desired). Feature 2B time delay allows the emergency source to stabilize before load transfer. If the emergency source fails while Feature 2B time delay is running, the controller again waits for the emergency source to become acceptable again and restarts Feature 2B.

At the conclusion of the Feature 2B time delay, the controller is ready to transfer the load to emergency.

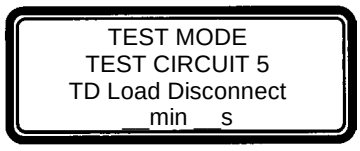

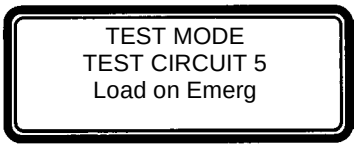

Load Transfer. To transfer the load to the emergency source in a delayed–transition mode the controller energizes ER relay first. The transfer switch CN coil energizes and opens the CN transfer switch contacts. The load is disconnected from both sources. The load disconnect time delay starts. When this time delay ends, the controller energizes the ER relay. The transfer switch CE coil energizes and closes the CE transfer switch main contacts. The transfer switch is now supplying the load from emergency source.

Delayed–Transition Automatic Transfer Switches continued

Load Retransfer To Normal

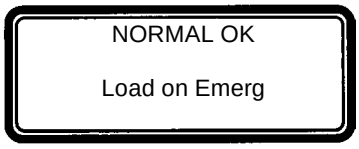

The sequence for load retransfer to the normal source begins automatically when the controller detects a restored normal source or a cancelled transfer test signal.

Normal Source Restoration. The Normal source is considered acceptable again when all six voltage, frequency, or phase rotation conditions occur (see page 3–1).

Cancel Transfer Test. Removal of the test transfer signal can be by the **Transfer Control** switch (Feature 5), engine–generator exerciser clock (Feature 11C), or via serial port (Feature 72A). When using the **Transfer Control** switch, it must be released from the *Transfer Test* position.

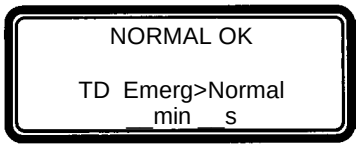

The controller begins the load retransfer sequence by starting the Feature 3A time delay. Feature 3A time delay on retransfer to normal allows the normal source to stabilize. If the normal source fails while the Feature 3A time delay is running, the controller waits for the normal source again to become acceptable and restarts the Feature 3A time delay. If the emergency source fails during while Feature 3A is running, the controller bypasses the time delay for immediately load retransfer. To bypass Feature 3A time delay, turn the **Transfer Control** switch to the *Retransfer Delay Bypass* position

At the conclusion of the Feature 3A time delay, the controller is ready to transfer the load to normal.

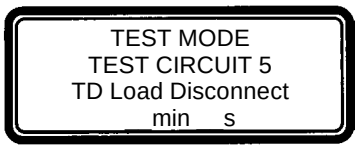

Load Retransfer. To retransfer the load to the normal source in a delayed–transition mode the controller de–energizes the ER and ER2 relays and energizes the SE2 relay. The transfer switch CE coil energizes and opens the CE transfer switch main contacts. The load is disconnected from both sources. The load disconnect time delay starts. When this time delay ends the controller energizes the ER relay. The transfer switch CN coil energizes and closes the CN transfer switch main contacts. The transfer switch is now supplying the load from the normal source again

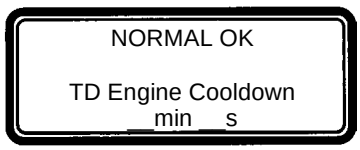

Engine Cooldown & Stop. After load retransfer to the normal source, the controller starts Feature 2E time delay. Feature 2E time delay provides an unloaded cooldown running period for the engine–generator. At the end of the time delay, the controller energizes the NR relay and the engine–generator is signalled to shutdown.

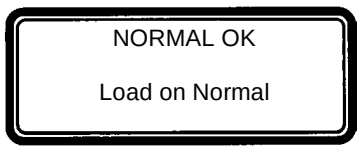

Controller Cover Removal

⚠ DANGER

Hazardous voltage capable of causing shock, burns, or death is connected to controller. Deenergize all power before removing cover.

The Group 5 controller (CP) is used for sensing, timing, and control functions with 7000 Series Automatic Transfer Switches. This Appendix shows the controller DIP switch actuator settings and jumper block settings for input voltage, frequency, phases, and type of transfer switch used (open, closed, delayed transition). These controls should only be used by trained technicians from ASCO Services, Inc. (ASI 1–800–800–2726).

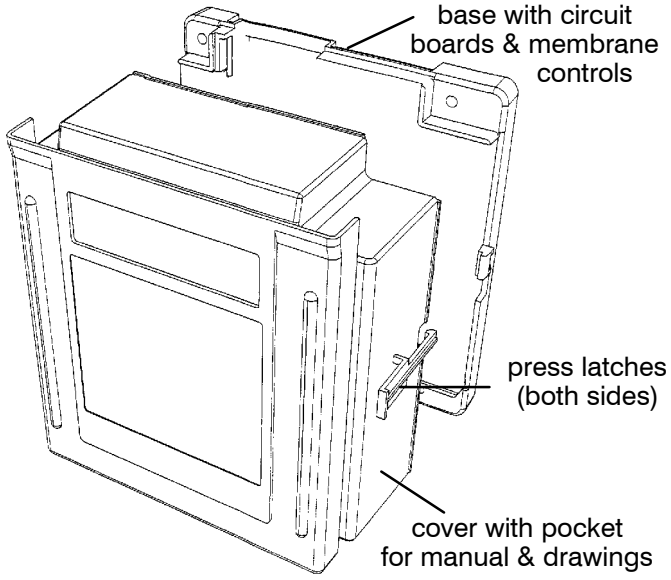

Figure A–1. Cover release latches.

DIP switch actuators see page A–2

Voltage jumper blocks see page A–4

⚠ CAUTION

Any indiscriminate change in DIP switch and jumper block settings may damage the controller and/or cause an inoperative ATS.

⚠ CAUTION

Risk of explosion if battery is replaced by an incorrect type. Dispose of used batteries according to local ordinances.

DIP Switch Actuators

The DIP switch in the Group 5 controller is located on the right side through a opening in the base. The following tables show what each actuator does.

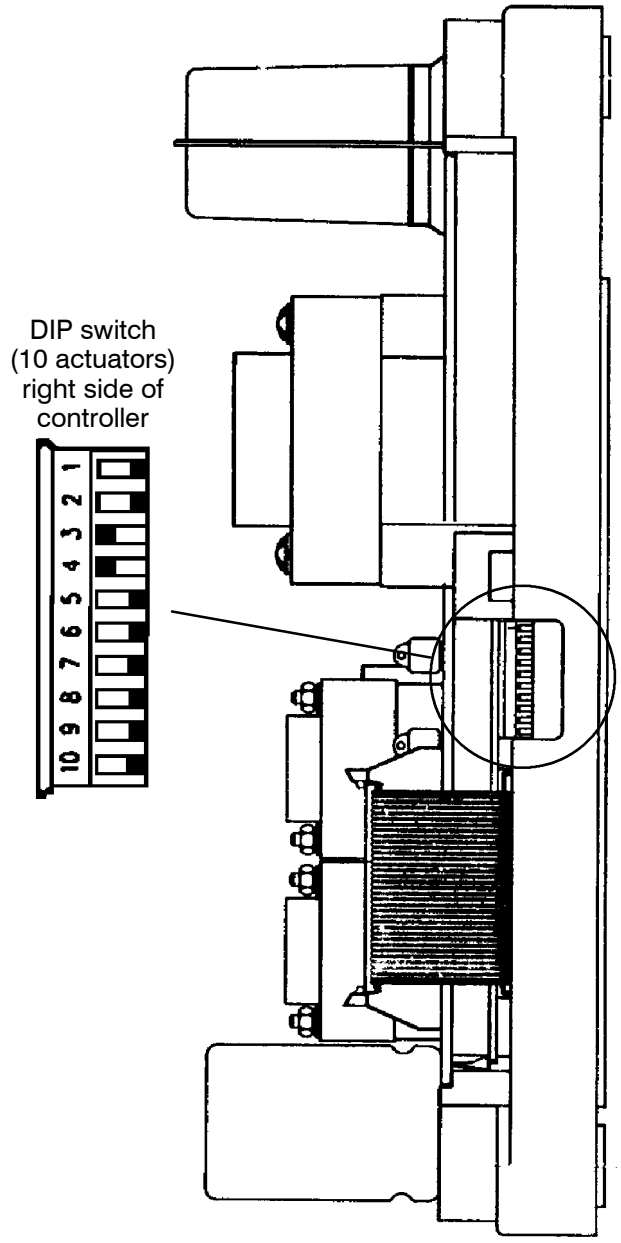

Figure A–2. Location of DIP switch.

Transfer Switch Type

DIP switch actuators 1 and 2 select the type of transfer switch used with the controller (open–transition, closed–transition, or delayed–transition). See Table A.

Table A. Transfer switch type — DIP actuators 1 & 2.

DIP switch actuator	open transition or *		closed transition	delayed-transition
1	⇨	⇦	⇦	⇨
2	⇨	⇦	⇨	⇦

* For open–transition, both actuators 1 & 2 must be in the same position (either both right or both left).

⚠ CAUTION

To avoid permanently damaging the Group 5 controller and/or disabling it, be certain that the setting matches the transfer switch type.

Nominal Source Voltage Selection

DIP switch actuators 3, 4, 5, and 6 select the input voltage to the controller. See Table B.

⚠ CAUTION

To avoid permanently damaging to the Group 5 controller, be certain that the voltage setting matches the transfer switch system voltage.

Table B. Nominal Input Voltage — DIP actuators 3, 4, 5, & 6.

DIP switch actuator	Input Voltage to Controller															
	115	120	208	220	230	240	277	380	400	415	440	460	480	550	575	600
3	⇦	⇨	⇦	⇨	⇦	⇨	⇦	⇨	⇦	⇨	⇦	⇨	⇦	⇨	⇦	⇨
4	⇦	⇦	⇨	⇨	⇦	⇦	⇨	⇨	⇦	⇦	⇨	⇨	⇦	⇦	⇨	⇨
5	⇦	⇦	⇦	⇦	⇨	⇨	⇨	⇨	⇦	⇦	⇦	⇦	⇨	⇨	⇨	⇨
6	⇦	⇦	⇦	⇦	⇦	⇦	⇦	⇦	⇨	⇨	⇨	⇨	⇨	⇨	⇨	⇨

Frequency of Sources

DIP switch actuator 7 selects either 50 or 60 Hz source frequency. See Table C.

Table C. Source Frequency — DIP actuator 7.

DIP switch actuator	50 Hz	60 Hz
7	⇦	⇨

Phases of Normal & Emergency Sources

DIP switch actuators 8 and 9 select either 1 phase or 3 phase for the Normal and Emergency sources. See Tables D and E.

Table D. Normal Source Phases — DIP actuator 8.

DIP switch actuator	1 Phase	3 Phase
8	⇦	⇨

Table E. Emergency S. Phases — DIP actuator 9.

DIP switch actuator	1 Phase	3 Phase
9	⇦	⇨

Data Input Lock

The Group 5 controller has an external input for a dry contact that, if closed, prevents setting changes from the keypad. DIP switch actuator 10 selects either yes or no for the external input (such as a key switch). Placing DIP switch actuator 10 in the **Yes** position enables the controller to respond to the external input. See Table F.

Lost or Forgotten Password

Moving DIP switch actuator 10 to the **Yes** position will allow a new password to be input (as long as the external input is open). Once the new password has been entered, return DIP switch actuator 10 to the **No** position. See Table F.

Table F. Lock Input — DIP actuator 10.

DIP switch actuator	Yes	No
10	⇦	⇨

Voltage Jumper Blocks

⚠ CAUTION

To avoid permanently damaging the Group 5 controller, be certain that the voltage setting matches the transfer switch system voltage.

Eight jumper blocks on the Group 5 controller are arranged in one of two patterns for the power supply to meet the requirements of the 16 different voltage inputs (shown in Table B on page A–2). These jumpers are located on the front right side near the ribbon cable. See Figures A–3 and A–4.

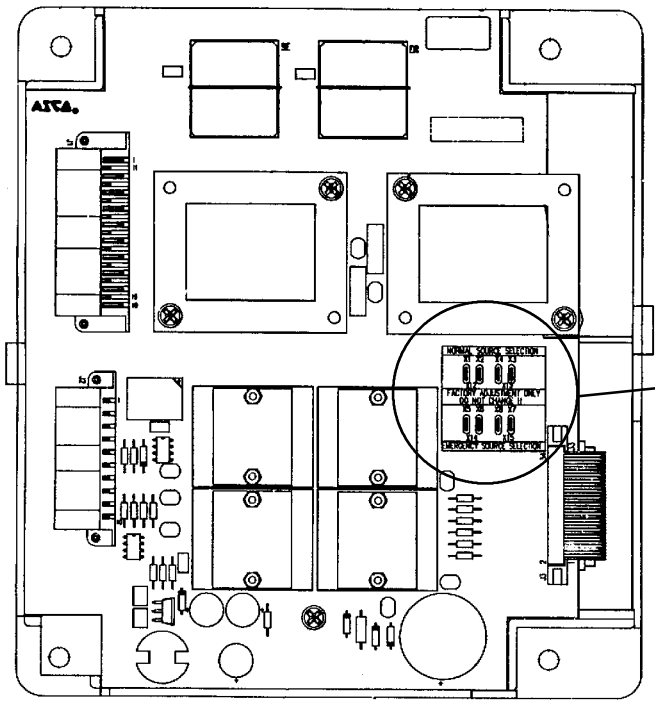

Note: Also see page A–2 for Nominal Source Voltage Selection DIP switch actuator settings.

jumper blocks (see Figure A–4)

Figure A–3. Location of jumper blocks.

Nominal voltage
115 — 277 V
(115, 120, 208, 220, 230, 240, 277)

Position jumpers HORIZONTALLY

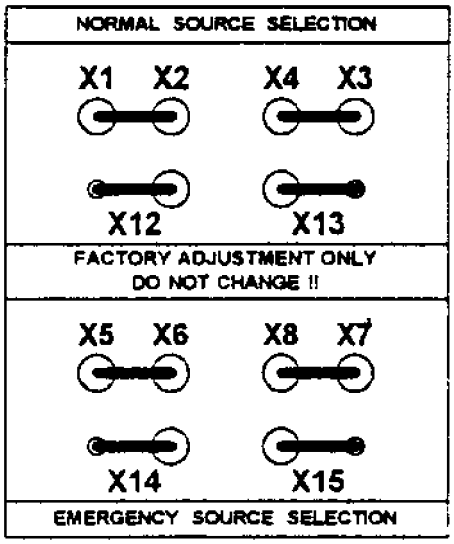

Nominal voltage
380 — 600 V
(380, 400, 415, 440, 460, 480, 550, 575, 600)

Position jumpers VERTICALLY

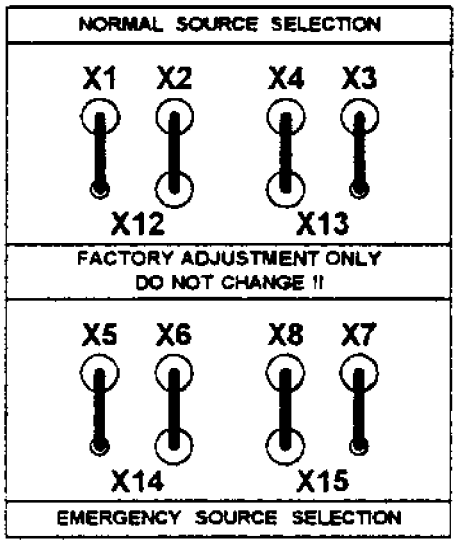

Figure A–4. Power supply jumper arrangements.

INDEX

A

address, 2–8, 2–9

arrow push–buttons, 1–1

B

baud rate, 2–8, 2–9

C

change password, 2–8, 2–9

clear log, 2–8, 2–9

closed–transition transfer, 4–3

commit to transfer, 2–6, 2–7

communication, 2–8, 2–9

control overview, 1–1

cover removal, A–1

CP settings, *see* settings

D

date setting, 2–10, 2–11

Decrease Value push–button, 1–1

default settings, 2–2, 2–4, 2–6, 2–8, 2–10
- reset, 2–9

delayed–transition transfer, 4–6

description of operation
- closed–transition, 4–3
- delayed–transition, 4–6
- open–transition, 4–1

DIP switch actuators
- data input/password lock, A–3
- frequency of sources, A–3
- nominal input voltage, A–2
- phases of sources, A–3
- transfer switch type, A–2

E

engine exerciser, 1–2, 2–10, 2–11

engine cooldown, 2–10, 2–11, 4–2

Enter/*Save Settings* push–button, 1–1

Esc (escape) push–button, 1–1

event logging, 2–8, 2–9, 2–12

F

failuretosynchronize(7ACTS/Bonly)
- auto bypass, 2–6
- time delay, 2–4, 2–5, 4–4

Features
- 1C, 2–4, 2–5, 4–1
- 1F, 2–4, 2–5
- 2B, 2–4, 2–5, 4–1
- 2E, 2–4, 2–5, 4–2
- 3A, 2–4, 2–5, 4–2
- 5, 2–7, 2–14, 4–1
- 6B, 2–14
- 6C, 2–14
- 6Z, 2–14
- 11C, 2–10, 2–11, 4–1
- 27, 2–6, 2–7, 4–1, 4–2
- 31F, 2–4, 2–5, 4–1
- 31M, 2–4, 2–5, 4–1
- 31G, 2–4, 2–5
- 31N, 2–4, 2–5
- 34A, 2–14
- 34B, 2–14
- 72A, 2–9, 2–13, 4–1

frequency settings, 2–2, 2–3, A–3

G

general settings, 1–2, 2–8, 2–9

I

Increase Value push–button, 1–1

inphase monitor, 2–6, 2–7

L

language, 2–8, 2–9

load shed, 2–6, 2–7

logging, event, 2–8, 2–9

M

Menu Scroll push–buttons, 1–1

O

open–transition transfer, 4–1

P

password
- change, 2–8, 2–9
- enter, 2–1
- forgotten, A–3
- lock, A–3
- wrong, 2–1

phase rotation monitor, 2–6, 2–7

phases, A–3

print enable, 2–8, 2–9

S

serial communication, 2–8, 2–9

service, 2–13, 2–14

settings
- CP, 2–3
- engine exerciser, 1–2, 2–10, 2–11
- features, 1–2, 2–6, 2–7
- general, 1–2, 2–8, 2–9
- overview, 1–2
- time & date, 2–10, 2–11
- time delay, 1–2, 2–4, 2–5

shed load, 2–6, 2–7

T

test mode, 4–1

time delays
- 1C, 2–4, 2–5, 4–1
- 1F, 2–4, 2–5
- 2B, 2–4, 2–5, 4–1
- 2E, 2–4, 2–5, 4–2
- 3A, 2–4, 2–5, 4–2
- 11C, 2–10, 2–11, 4–1
- 27, 2–6, 2–7, 4–1, 4–2
- 31F, 2–4, 2–5, 4–1
- 31M, 2–4, 2–5, 4–1
- 31G, 2–4, 2–5
- 31N, 2–4, 2–5
- CT delayed transfer, 2–6, 2–7
- inphase monitor, 2–6, 2–7

time setting, 2–10, 2–11

tranfer switch type, A–2

U

unbalance, voltage, 2–2, 2–3

V

view event log, 2–12

voltage DIP switch actuators, A–2

voltage jumper blocks, A–4

voltage settings, 2–2, 2–3

© ASCO Power Technologies, L.P. 2001

OUTLINE & MOUNTING FOR ASCO 7000 SERIES AUTOMATIC TRANSFER SWITCHES, TYPES 7ATS, 7ACTS & 7ADTS RATED 600-800 AMPERES

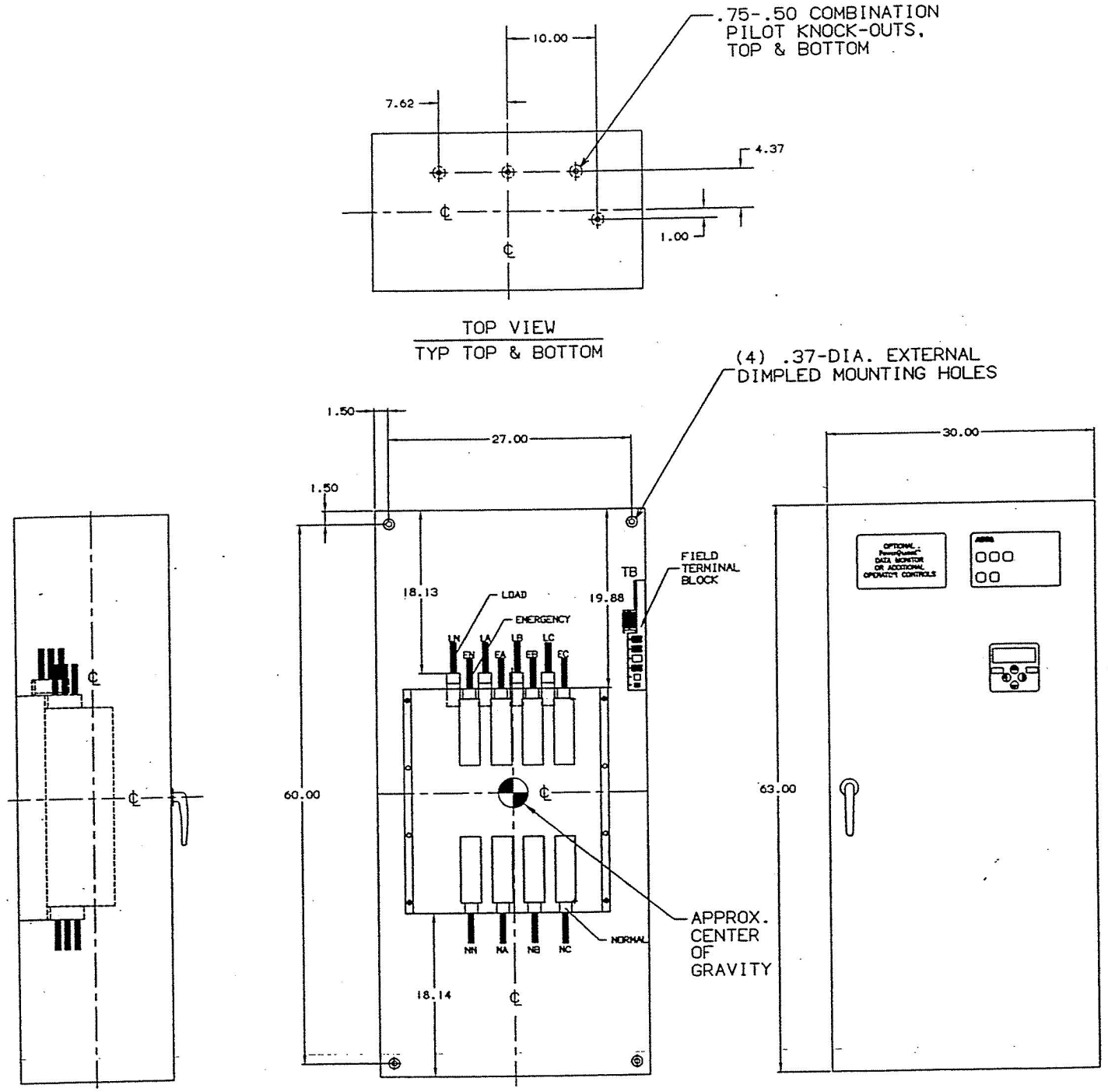

TOP VIEW
TYP TOP & BOTTOM

LEFT SIDE

FRONT VIEW
WITHOUT DOOR

FRONT VIEW
WITH DOOR

GENERAL NOTES

1. TYPE 1 CONSTRUCTION IN ACCORDANCE WITH UL STANDARD 508.
2. STANDARD FINISH – LIGHT GREY, ANSI 61.
3. KEY LOCKABLE HANDLE.
4. REMOVABLE SINGLE DOOR
5. TERMINALS – SCREW TYPE LUGS FOR EXTERNAL POWER CONNECTIONS.
   RANGE: (3) #2 AWG TO 600 MCM Al–Cu CONDUCTORS.
6. STANDARD OUTLINE FOR 4 POLE(B3) 400 AMP 7ADTS.

7000 SERIES OLD 800A ENCLOSURE

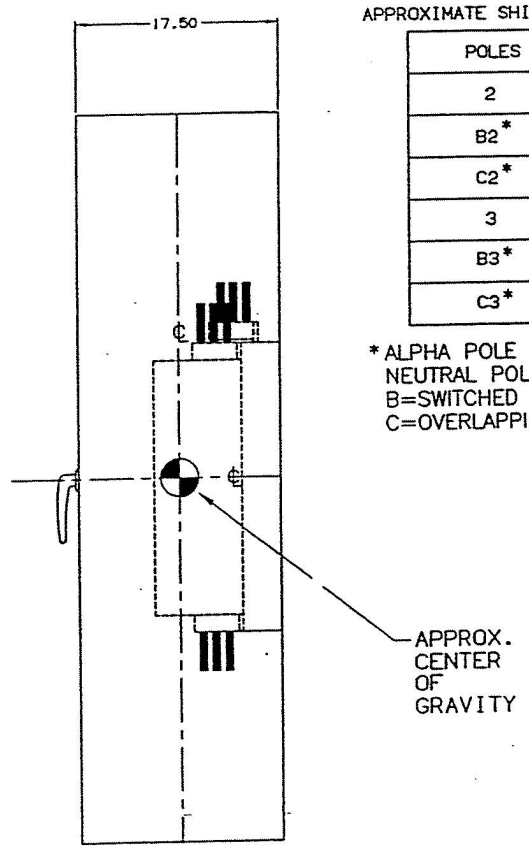

APPROXIMATE SHIPPING WEIGHT, LBS (KG)

POLES	WEIGHT
2	250 (114)
B2*	260 (118)
C2*	310 (140)
3	260 (118)
B3*	320 (145)
C3*	320 (145)

* ALPHA POLE PREFIX DESCRIBES OPTIONAL NEUTRAL POLE:
B=SWITCHED TYPE NEUTRAL
C=OVERLAPPING TYPE NEUTRAL (NOT AVAILABLE ON TYPE 7ADTS UNITS)

CATALOG NO. _____
CERTIFIED
TO ASCO® S.O. _____
DATE _____ BY _____

B	156096	BVM	11/00
	SEE ECN		
A	151290	BVM	VK 4/99
	SEE ECN		
—	147192	SDH	SDH 2/98
	ISSUE		

PROJECT NAME:
OUTLINE & MOUNTING
7000 SERIES, 7ATS, 7ACTS & 7ADTS

THIRD ANGLE PROJECTION

SUBSIDIARY DISTRIBUTION

COMPUTER GENERATED DRAWING

	BY	DATE
DRAWN BY	SDH	2/98
CHECKED		
DRAFTING APPROVAL		
FINAL APPROVAL	SDH	2/98

MANUFACTURING TOLERANCES TO BE IN ACCORDANCE WITH ASCO PROCEDURE MP-4-002. FOR PLASTIC PARTS SEE MP-4-006

ASSOC. REF. NO.

PROPERTY OF AUTOMATIC SWITCH COMPANY. USE PERMITTED FOR OUR WORK ONLY. ALL RIGHTS OF DESIGN OR INVENTION ARE RESERVED.

Automatic Switch Co.
FLORHAM PARK, NEW JERSEY 07932 PRINTED IN U.S.A.

SCALE 8:1 FILE A3
SIZE DS DWG. NO. 619579
CHANGE LETTER B ECN NO. 156096 SHEET

Katolight Service - Master Repair Manual - Page 3881

COMPOSITE OUTLINE FOR ASCO 7000 SERIES (H7ATS, H7ACTS, H7ADTS) 600–1000 AMPERE TRANSFER SWITCHES

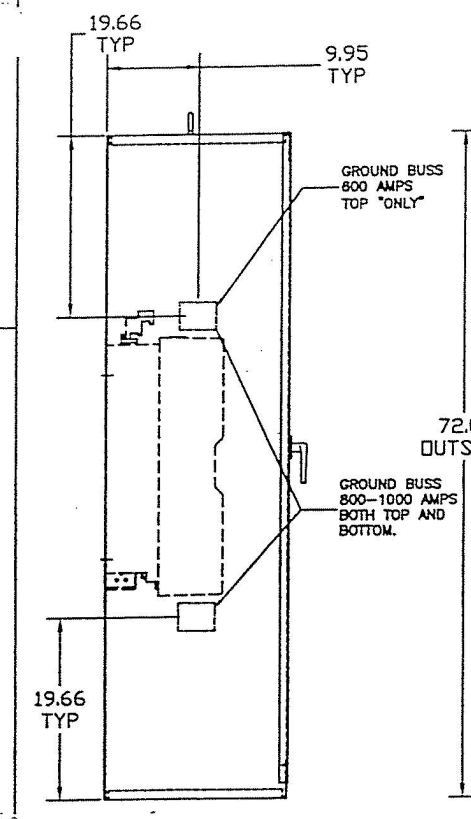

LEFT SIDE
WITH DOOR

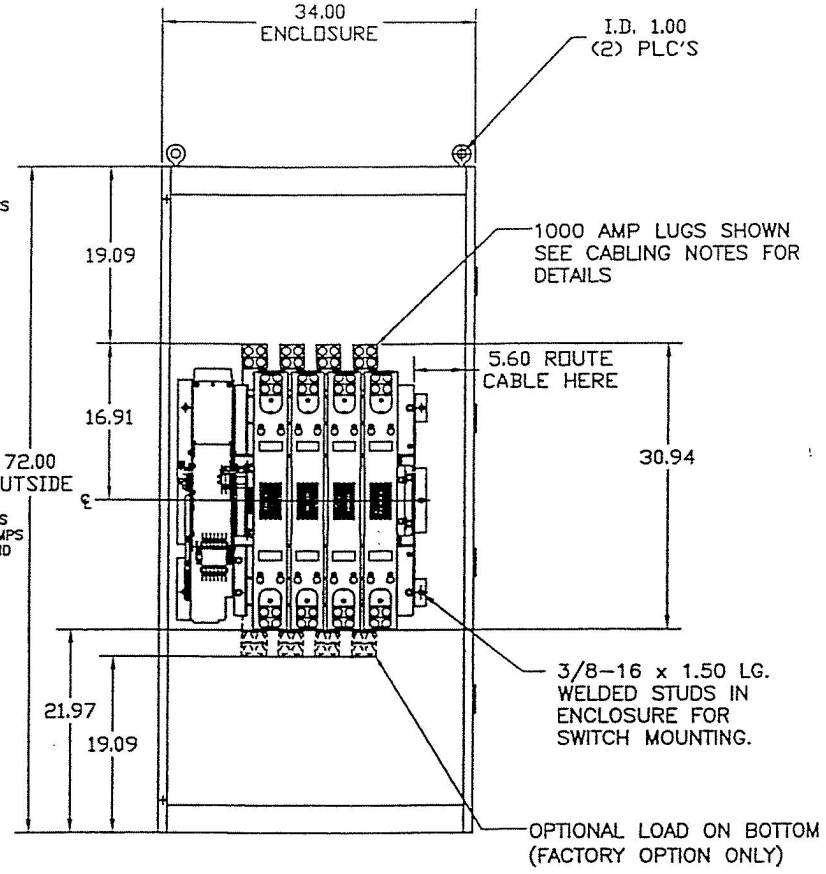

FRONT VIEW
WITHOUT DOOR

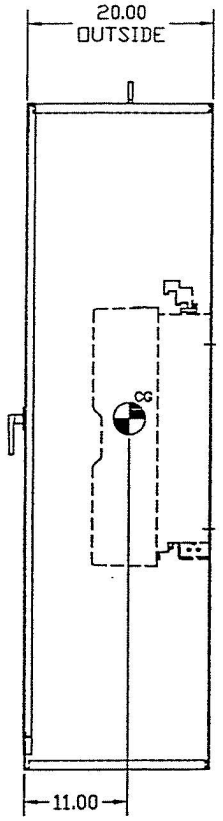

RIGHT SIDE
WITH DOOR

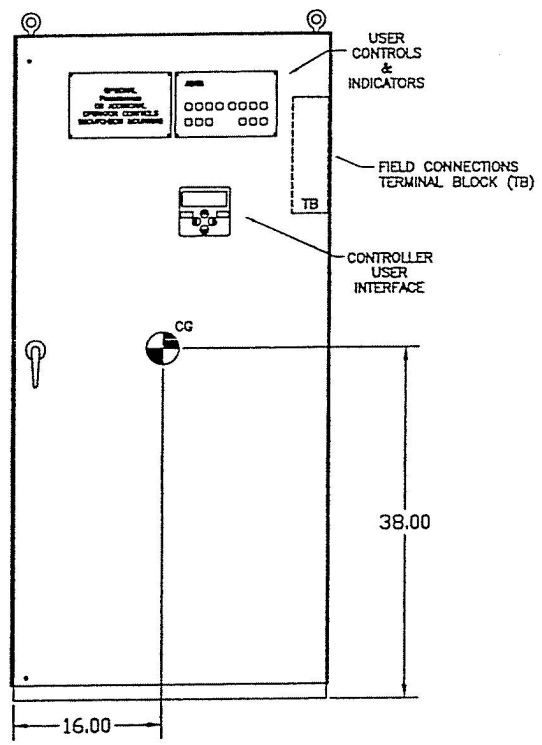

FRONT VIEW
WITH DOOR

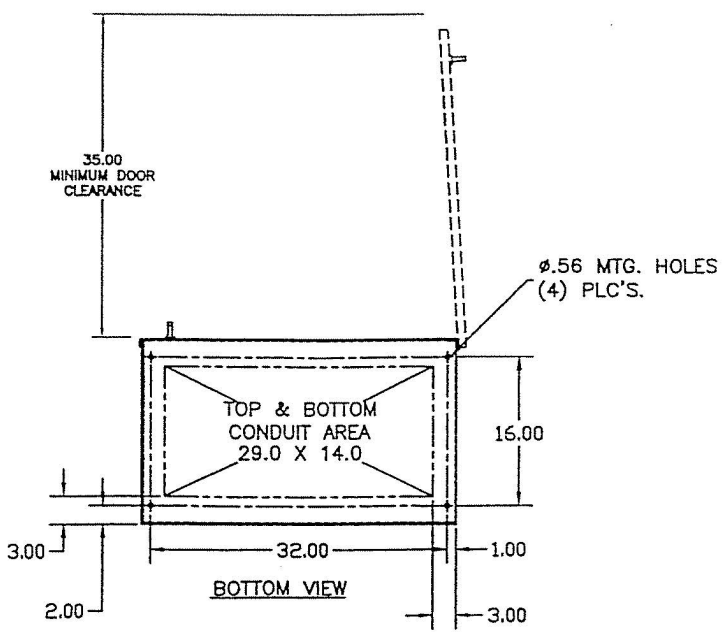

BOTTOM VIEW

GENERAL NOTES

1. TYPE 1 ENCLOSURE. FREE STANDING. FLOOR MOUNTED. 12 GAUGE FORMED FRAME CONSTRUCTION.
2. NEC STANDARD GAUGE PAN TYPE DOOR WITH LOCKABLE HANDLE.
3. FINISH: ASA 61 GRAY. POLYESTER POWDER STANDARD. OTHER ANSI COLORS AVAILABLE CONSULT FACTORY UL RECOGNIZED.
4. CONSTRUCTION IS IN ACCORDANCE WITH APPLICABLE REQUIREMENTS OF UL 891.
5. RECOMMENDED CLEARANCES:
   FRONT: 35 INCHES
6. A 20% RATED GROUND BUS IS PROVIDED.
7. UNIT IS DESIGNED FOR COMBINATION TOP AND BOTTOM CABLE ENTRY. THE STANDARD SWITCH CONFIGURATION IS FOR TOP LUGS EMERGENCY CENTER LUGS LOAD AND BOTTOM LUGS NORMAL. OPTIONALLY, THE SWITCH MAY BE SUPPLIED WITH REVERSE NORMAL & EMERGENCY LUGS. (REFER TO THE WIRING DIAGRAM FURNISHED WITH EACH TRANSFER SWITCH TO DETERMINE TERMINATION POSITIONS).
8. A FULL RATED NEUTRAL CONNECTION FOR EACH SOURCE AND THE LOAD IS OPTIONAL. WHEN PROVIDED IT IS IN ONE OF THE FOLLOWING FORMATS AS SPECIFIED BY THE CATALOG NO. NEUTRAL TYPE;
   A. SOLID (COPPER BUS) NEUTRAL
   B. SWITCHED NEUTRAL POLE
   C. OVERLAPPING NEUTRAL POLE (NOT AVAILABLE ON 7ACTS/ADTS UNITS)
9. NO KNOCKOUTS ARE PROVIDED.

CABLING NOTES

1. ALL SIZES SUPPLIED STANDARD WITH MECHANICAL (SCREW TYPE) LUGS. (SEE AMP SIZE BELOW)
   A. LUG MATERIAL: ALUMINUM ALLOY 6061–T6 WITH ELECTRO TIN PLATED FINISH.
   B. SCREW MATERIAL: ALUMINUM ALLOY 6262–T9 WITH ELECTRO TIN PLATED FINISH.
   C. UL LISTED, CSA CERTIFIED.
   D. LUG SCREW TIGHTENING TORQUE PER UL 486B: 19 FT–LBS.
   E. SUITABLE WIRE BENDING SPACE IS PROVIDED. (SEE AMP SIZE BELOW)
2. OPTIONAL COPPER CRIMP LUGS MAY BE SUPPLIED. (SEE AMP SIZE BELOW)
   A. LUG MATERIAL: HIGH CONDUCTIVITY WROUGHT COPPER FINISH, ELECTRO TIN PLATED.
   B. UL LISTED, CSA CERTIFIED.
   C. LUG MOUNTING HARDWARE TIGHTENING TORQUE: (REFER TO WITHSTAND CURRENT RATING LABEL PROVIDED ON EACH TRANSFER SWITCH).
   D. SUITABLE WIRE BENDING SPACE IS PROVIDED. (SEE AMP SIZE BELOW)
3. CONSULT FACTORY FOR OTHER TERMINATION REQUIREMENTS.
4. GROUND LUGS ARE PROVIDED STANDARD AS FOLLOWS. (SEE AMP SIZE BELOW)

NOTES 600 AMP SWITCHES

1. SUPPLIED WITH STANDARD MECHANICAL (SCREW TYPE) LUGS ON THE NORMAL, EMERGENCY & LOAD BUS STABS. ONE (1) LUG PER PHASE AND NEUTRAL EACH SUITABLE FOR CONNECTION OF TWO (2) #2 –600MCM CU/AL CABLE (SEE NOTE "E" BELOW).

   E. SUITABLE WIRE BENDING SPACE IS PROVIDED FOR UP TO TWO (2) 600MCM CABLES PER TERMINAL PER TABLE 373–6(b) OF NFPA 70 OF THE NEC.

2. OPTIONAL COPPER CRIMP LUGS MAY BE SUPPLIED. UP TO TWO (2) TWO HOLE, LONG BARREL CU CRIMP LUGS RATED FOR UP TO 600MCM. (REFER TO CRIMP LUG INSTALLATION DATA PROVIDED WITH UNIT FOR FULL INSTALLATION DETAILS).

   D. SUITABLE WIRE BENDING SPACE IS PROVIDED FOR UP TO TWO (2) 600MCM CABLES PER TERMINAL PER TABLE 373–6(b) OF NFPA 70 OF THE NEC.

4. GROUND LUGS ARE PROVIDED STANDARD AS FOLLOWS;
   (6) 1/0 – 750MCM CU/AL CABLE CONNECTIONS.

NOTES 800–1000 AMP SWITCHES

1. SUPPLIED WITH STANDARD MECHANICAL (SCREW TYPE) LUGS ON THE NORMAL, EMERGENCY & LOAD BUS STABS. ONE (1) LUG PER PHASE AND NEUTRAL EACH SUITABLE FOR CONNECTION OF FOUR (4) 1/0 –750MCM CU/AL CABLE (SEE NOTE "E" BELOW).

   E. SUITABLE WIRE BENDING SPACE IS PROVIDED FOR UP TO FOUR (4) 750MCM CABLES PER TERMINAL PER TABLE 373–6(a) OF NFPA 70 OF THE NEC.

2. OPTIONAL COPPER CRIMP LUGS MAY BE SUPPLIED. UP TO FOUR (4) TWO HOLE, LONG BARREL CU CRIMP LUGS RATED FOR UP TO 600MCM. (REFER TO CRIMP LUG INSTALLATION DATA PROVIDED WITH UNIT FOR FULL INSTALLATION DETAILS).

   D. SUITABLE WIRE BENDING SPACE IS PROVIDED FOR UP TO FOUR (4) 600MCM CABLES PER TERMINAL PER TABLE 373–6(b) OF NFPA 70 OF THE NEC.

4. GROUND LUGS ARE PROVIDED STANDARD AS FOLLOWS;
   (12) 1/0 – 750MCM CU/AL CABLE CONNECTIONS.

7000 SERIES NEW 800A ENCLOSURE

CHANGE LETTER	ECN NO.	BY	APP.	DATE
A	157639	BVH		5/01
	SEE ECN			
—	156845	BVH	WK	2/15/01
	ISSUED			

SUBSIDIARY DISTRIBUTION

AC		AH		AM		AJ		AL
CH		AW		AA		PB		AR
AB		AP		AC		AB		

PROJECT NAME:
COMPOSITE OUTLINE
7000 SERIES TS "H"
600–1000 AMP

THIRD ANGLE PROJECTION

	BY	DATE
DRAWN BY	DJB	2/14/01
CHECKED	BK	2/14/01
DRAWING APPROVAL		
FINAL APPROVAL	WK	2/14/01

MANUFACTURING DRAWINGS TO BE IN ACCORDANCE WITH ASCO PROCEDURE MP-1-003, FOR PLASTIC PARTS SEE MP-1-005

ASCO. ASCO Power Technologies, L.P. Florham Park, New Jersey 07932 U.S.A.

PROPERTY OF ASCO POWER TECHNOLOGIES, USE PERMITTED FOR OUR WORK ONLY. ALL RIGHTS OF DESIGN OR INVENTION ARE RESERVED.

AMEND. REF. NO.

COMPUTER GENERATED DRAWING
SCALE ACAD FILE A0
SIZE DRWG. NO. DS713200
CHANGE LETTER A ECN NO. 157639 SHEET

Katolight Service - Master Repair Manual - Page 3882

THREE PHASE WIRING FOR ASCO 7000 SERIES AUTOMATIC TRANSFER SWITCHES TYPE 7ATS RATED 600 & 800 AMPERES

FEATURES, SETTINGS, OPERATION, ACCESSORIES & NOTES

THE FOLLOWING FEATURES AND RELATED SETTINGS ARE PART OF THE GROUP 5 CONTROL PANEL'S USER CONFIGURABLE PARAMETERS. FOR DETAILED INFORMATION REGARDING THE CONFIGURATION OF THESE PARAMETERS AND OTHER FEATURES OF THE GROUP 5 CONTROL PANEL, REFER TO THE GROUP 5 CONTROL PANEL FOR ASCO 7000 SERIES AUTOMATIC TRANSFER SWITCHES USER'S GUIDE (PART NO. 381333-126) PROVIDED WITH EVERY 7000 SERIES AUTOMATIC TRANSFER SWITCH.

THE NOMINAL OPERATING VOLTAGE & FREQUENCY IS PRE-PROGRAMMED AT THE FACTORY BASED ON THE NAMEPLATE DATA PRINTED ON THE TRANSFER SWITCH & CONTROL PANEL NAMEPLATES.

VOLTAGE & FREQUENCY SENSING

THE FOLLOWING SETTINGS ARE EXPRESSED AS A PERCENTAGE OF THE CONTROL PANEL'S NOMINAL VOLTAGE SETTING UNLESS STATED OTHERWISE. ALL SETTINGS ARE ADJUSTABLE IN INCREMENTS OF 1%.

A. RMS VOLTAGE SENSING ON ALL PHASES OF THE NORMAL & EMERGENCY SOURCES.

PARAMETER	RANGE OF SETTINGS	DEFAULT SETTING
NORMAL VOLTAGE DROPOUT	70–98%	85%
NORMAL VOLTAGE PICKUP	85–100%	90%
NORMAL OVER VOLTAGE TRIP	102–115%	OFF
NORMAL VOLTAGE UNBALANCE	YES/NO	NO
NORMAL VOLTAGE UNBALANCE DROPOUT	5–20% OF AVG. NORMAL VOLTAGE	20% (if ON)
NORMAL VOLTAGE UNBALANCE PICKUP	3–18% OF AVG. NORMAL VOLTAGE	10% (if ON)
EMERGENCY VOLTAGE DROPOUT	70–98%	75%
EMERGENCY VOLTAGE PICKUP	85–100%	90%
EMERGENCY OVER VOLTAGE TRIP	102–115%	OFF
EMERGENCY VOLTAGE UNBALANCE	YES/NO	NO
EMERGENCY VOLTAGE UNBALANCE DROPOUT	5–20% OF AVG. EMERGENCY VOLTAGE	20% (if ON)
EMERGENCY VOLTAGE UNBALANCE PICKUP	3–18% OF AVG. EMERGENCY VOLTAGE	10% (if ON)

B. FREQUENCY SENSING OF THE NORMAL & EMERGENCY SOURCES.

PARAMETER	RANGE OF SETTINGS	DEFAULT SETTING
NORMAL FREQUENCY DROPOUT	85–98%	90%
NORMAL FREQUENCY PICKUP	90–100%	95%
NORMAL OVER FREQUENCY TRIP	102–110%	OFF
EMERGENCY FREQUENCY DROPOUT	85–98%	90%
EMERGENCY FREQUENCY PICKUP	90–100%	95%
EMERGENCY OVER FREQUENCY TRIP	102–110%	OFF

TIME DELAYS

THE FOLLOWING TIME DELAY SETTINGS ALL HAVE AN ADJUSTABLE RANGE OF 0–60 min 59 sec UNLESS STATED OTHERWISE. ADJUSTABLE IN INCREMENTS OF 1 sec.
NOTE: SOME TIME DELAYS MAY BE EFFECTED BY CUSTOMER REQUESTED ACCESSORIES PROVIDED WITH THE UNIT. REFER TO THE DESCRIPTIONS PROVIDED UNDER THE "ACCESSORIES" NOTES ON THIS PAGE.

FEATURE	NAME	DEFAULT SETTING
1C	NORMAL SOURCE FAILURE TO ENGINE START	1 sec
2B	TRANSFER TO EMERGENCY ON AVAILABILITY OF EMERGENCY SOURCE	0 sec
1F	EMERGENCY SOURCE FAILURE RETRANSFER (NORMAL SOURCE AVAILABLE)	0 sec
2E	ENGINE COOLDOWN FOLLOWING RETRANSFER TO NORMAL	5 min
3A	RETRANSFER TO NORMAL (NORMAL FAILURE MODE)	30 min
3A	RETRANSFER TO NORMAL (TEST MODE)	30 sec
—	DELAYED TRANSFER (LOAD "OFF" TIME), [0–5 min 59 sec]	3 sec

DESCRIPTIONS OF TIME DELAYS:

FEAT. 1C – DELAY ON NORMAL SOURCE OUTAGE. STARTS ON FAILURE OF NORMAL SOURCE. RESETS IF NORMAL SOURCE IS ACCEPTED BEFORE EXPIRATION. INHIBITS ENGINE STARTING AND AUTOMATIC TRANSFER UNTIL EXPIRATION.

FEAT. 2B – DELAY PRIOR TO TRANSFER TO THE EMERGENCY SOURCE. DELAY STARTS ON EXPIRATION OF FEAT. 1C AND WHEN THE EMERGENCY SOURCE HAS BEEN ACCEPTED. DELAY RESETS IF THE EMERGENCY SOURCE FAILS PRIOR TO EXPIRATION. ON EXPIRATION, TRANSFER TO EMERGENCY IS INITIATED UNLESS THE NORMAL SOURCE HAS RECOVERED AND THE "COMMIT TO TRANSFER" FEATURE IS SET TO "NO" COMMIT. PROVIDES A PERIOD FOR EMERGENCY SOURCE STABILIZATION OR STAGING OF MULTIPLE TRANSFER SWITCH CONTROLLED LOADS TO THE EMERGENCY SOURCE.

FEAT. 1F – DELAY ON RETRANSFER TO NORMAL IN THE EVENT OF EMERGENCY SOURCE FAILURE. DELAY BEGINS ON FAILURE OF THE EMERGENCY SOURCE IF THE NORMAL SOURCE IS ACCEPTABLE. ON EXPIRATION, RETRANSFER TO NORMAL WILL BE INITIATED.

FEAT. 2E – DELAY ON ENGINE SHUTDOWN (ENGINE COOLDOWN PERIOD). DELAY STARTS FOLLOWING RETRANSFER TO THE NORMAL SOURCE. PROVIDES A PERIOD FOR THE ENGINE-GENERATOR SET TO RUN UNLOADED PRIOR TO SHUTDOWN.

FEAT. 3A – RETRANSFER TO NORMAL DELAY (NORMAL FAILURE MODE)
DELAY STARTS WHEN NORMAL SOURCE IS ACCEPTED (FOLLOWING IT'S FAILURE) AND WHILE THE LOAD IS CONNECTED TO EMERGENCY. RESETS IF NORMAL FAILS PRIOR TO EXPIRATION or IF THE EMERGENCY SOURCE FAILS BEFORE EXPIRATION AND FEAT. 1F EXPIRES (AUTOMATIC BYPASS ON EMERGENCY SOURCE FAILURE). PROVIDES A PERIOD FOR THE NORMAL SOURCE TO STABILIZE PRIOR TO RETRANSFER.

FEAT. 3A – RETRANSFER TO NORMAL DELAY (TEST MODE)
DELAY STARTS WHEN THE "TRANSFER TEST" SWITCH IS RESET TO "AUTO" (FOLLOWING A USER INITIATED TRANSFER TEST) AND WHILE THE LOAD IS CONNECTED TO EMERGENCY. RESETS IF NORMAL FAILS PRIOR TO EXPIRATION or IF THE EMERGENCY SOURCE FAILS BEFORE EXPIRATION AND FEAT. 1F EXPIRES (AUTOMATIC BYPASS ON EMERGENCY SOURCE FAILURE).

MOTOR LOAD TRANSFER FEATURE

FEATURE 27 – INPHASE TRANSFER CONTROL LOGIC TO INITIATE AN INPHASE TRANSFER OF LOADS BETWEEN LIVE SOURCES. USED TO PREVENT NUISANCE TRIPPING OF CIRCUIT BREAKERS AND POSSIBLE DAMAGE TO MECHANICAL LOADS CAUSED BY OUT OF PHASE TRANSFER.
ACTIVATED VIA THE GROUP 5 CONTROL PANEL USER INTERFACE (TRANSFER CONTROL CENTER) BY SELECTING "IN-PHASE MONITOR ENABLE" = YES. AN ADJUSTABLE DELAY (0.0–3.0 sec FACTORY SET TO 1.5 sec, IN INCREMENTS OF 0.1 sec) DELAYS SENSING TO PERMIT STABILIZATION OF THE SOURCES PRIOR TO SENSING. FACTORY SETTING IS DISABLED UNLESS SPECIFIED TO BE FACTORY ACTIVATED AT THE TIME OF ORDER.

ENGINE EXERCISER

THE ENGINE EXERCISER FEATURE PROVIDES A MEANS TO PERFORM AUTOMATIC EXERCISING OF THE ENGINE-GENERATOR SET EITHER WITH OR WITHOUT LOAD TRANSFER.
THE USER CAN PROGRAM UP TO SEVEN DIFFERENT EXERCISE ROUTINES. EACH ROUTINE INCLUDES;
1. ENABLE or DISABLE THE ROUTINE
2. ENABLE or DISABLE TRANSFER OF THE LOAD DURING THE ROUTINE
3. SET START TIME OF ROUTINE –
   - TIME OF DAY
   - DAY OF WEEK
   - WEEK OF MONTH (1st, 2nd, 3rd, 4th, ALTERNATE or ALL)
4. SET THE DURATION OF THE ROUTINE

PARAMETER	RANGE OF SETTING	DEFAULT SETTING
MONTH (CLOCK SET)	JAN FEB MAR APR MAY JUN JUL AUG SEP OCT NOV DEC	CURRENT DATE
DAY	1–31	
YEAR	00–99	
HOUR	0–23	Eastern Standard Time
MINUTE	0–59	
ENABLE ROUTINE (ROUTINE 1–7)	YES/NO	NO
TRANSFER LOAD	YES/NO	NO
START HOUR	0–23	0
START MINUTE	0–59	0
RUN WEEK	ALL, ALTERNATE, 1st, 2nd, 3rd, 4th, 5th	ALL
RUN DAY	SUN MON TUE WED THU FRI SAT	SUN
DURATION HOURS	0–23	0
DURATION MINUTES	0–59	0

SIGNALS & AUXILIARIES

A. FEATURES 7 – ENGINE START SIGNAL
SIGNAL INITIATED BY DROPOUT OF CONTROL PANEL RELAY (NR) FOLLOWING EXPIRATION OF THE FEATURE 1C TIME DELAY (DELAY TO OVERRIDE MOMENTARY NORMAL SOURCE OUTAGES). CLOSES TO SIGNAL ENGINE START. ENGINE STARTING SIGNAL RESETS FOLLOWING RETRANSFER TO THE NORMAL SOURCE AND EXPIRATION OF THE FEATURE 2E (ENGINE COOLDOWN) TIME DELAY.
PROVIDED AS A SINGLE FORM A CONTACT CONNECTED TO THE FIELD CONNECTIONS TERMINAL BLOCK (TB). CONTACT RATED 5 AMPS AT 32 VDC/120VAC RESISTIVE.

B. FEATURES 14AA & 14BA – TRANSFER SWITCH AUXILIARY POSITION INDICATING CONTACTS. TWO (2) FORM A CONTACTS TO INDICATE CONNECTION OF THE TRANSFER SWITCH TO NORMAL (14A) AND TO EMERGENCY (14B). CONTACTS CONNECTED TO THE FIELD CONNECTIONS TERMINAL BLOCK (TB). CONTACTS RATED 10 AMPS, 32 VDC, 480 VAC.

D. FEATURE 17 – REMOTE TRANSFER TO EMERGENCY.
REQUIRES A CUSTOMER SUPPLIED NORMALLY OPEN CONTACT. CLOSING OF THE CONTACT CAUSES ENGINE START AND TRANSFER TO THE EMERGENCY SOURCE. OPENING OF THE CONTACT ACTIVATES THE FEATURE 3A (RETRANSFER TO NORMAL) DELAY PRIOR TO RETRANSFER. IN THE EVENT THE EMERGENCY SOURCE FAILS WHILE THE TRANSFER SWITCH IS CONNECTED TO EMERGENCY AND THE REMOTE CONTACT IS CLOSED, THE TRANSFER SWITCH WILL RETRANSFER TO THE NORMAL SOURCE. CONNECTED TO THE FIELD CONNECTIONS TERMINAL BLOCK (TB).

OPERATION

IF THE NORMAL SOURCE FAILS, THE TRANSFER SWITCH INITIATES STARTING OF THE ENGINE-GENERATOR SET. WHEN PROPER VOLTAGE AND FREQUENCY HAVE BEEN ATTAINED, THE LOAD WILL BE TRANSFERRED TO THE EMERGENCY SOURCE.

WHEN THE NORMAL SOURCE IS RESTORED FOR THE DURATION OF THE FEATURE 3A (RETRANSFER TO NORMAL) TIME DELAY SETTING, THE LOAD WILL BE RETRANSFERRED TO THE NORMAL SOURCE.

THE ENGINE WILL CONTINUE TO RUN FOR THE ENGINE COOLDOWN PERIOD, FEATURE 2E.

USER CONTROLS AND INDICATIONS

A. FEATURES 5L & 6B – TRANSFER TEST/RETRANSFER TIME DELAY BYPASS SELECTOR. THREE POSITION SELECTOR SWITCH (SS1), MAINTAINED TEST POSITION, MOMENTARY (SPRING RETURN FROM LEFT) RETRANSFER TIME DELAY BYPASS POSITION.

B. FEATURES 9A & 9B – TRANSFER SWITCH POSITION INDICATORS.
FEATURE 9A: TRANSFER SWITCH CLOSED ON NORMAL (GREEN LED)
FEATURE 9B: TRANSFER SWITCH CLOSED ON EMERGENCY (RED LED)

C. FEATURES 9C & 9D – SOURCE ACCEPTANCE INDICATORS.
FEATURE 9C: NORMAL SOURCE ACCEPTED (GREEN LED)
FEATURE 9D: EMERGENCY SOURCE ACCEPTED (RED LED)

GENERAL NOTES

1. SWITCH SHOWN DEENERGIZED AND CONNECTED TO THE NORMAL SOURCE.
2. DEVICE SYMBOLS AND DESIGNATIONS ARE IN ACCORDANCE WITH NEMA PUBLICATION ICS 1-1983, PART 1-101A.
3. ALL WIRING IS #16 AWG, TINNED, STRANDED COPPER UNLESS OTHERWISE INDICATED.
4. ○ ON TERMINAL BLOCKS INDICATES AVAILABLE FIELD CONNECTION POINT.
5. ● ON TERMINAL BLOCKS INDICATES FACTORY CONNECTION POINT.
6. CONTROL AND ACCESSORY WIRING IS ROUTED IN ACCORDANCE WITH ASCO ASSEMBLY PROCEDURE GS451261.
7. AN OPERATOR'S MANUAL IS FURNISHED WITH EACH AUTOMATIC TRANSFER SWITCH. REFER TO THIS PUBLICATION PRIOR TO INSTALLATION AND OPERATION OF THE UNIT.

7000 SERIES WIRING DIAGRAM

BASE CATALOG NUMBER				CATALOG NUMBER SUFFIXES			
CATALOG TYPE	NEUTRAL TYPE	PHASE POLES	AMPS	VOLT CODE	CONTROLLER	OPTIONAL ACCESSORY	ENCLOSURE CODE
7ATS	A, B, C	3	600, 800	A, B, C, D, E, F, G, H, J, K, L, M, N, P, Q, R	5	X	C, D, E, F, G, H, J, K, L
	BLANK FOR NONE					BLANK FOR NONE	BLANK FOR OPEN TYPE

FORM REV –

EXPLANATION OF CATALOG NUMBER CODES

NEUTRAL TYPE		VOLTAGE CODES (3 PHASE (3 OR 4 WIRE) 50 OR 60 Hz)		ENCLOSURE CODES	
CODE	DESCRIPTION	CODE	NOMINAL VOLTAGE	CODE	TYPE	DESCRIPTION
BLANK	NONE	A	115	BLANK		OPEN TYPE (NO ENCLOSURE)
A	SOLID	B	120	C	1	GENERAL PURPOSE, INDOOR
B	SWITCHING	C	208	D	1	GENERAL PURPOSE, INDOOR, GASKETED
C	OVERLAPPING	D	220	E	2	INDOOR, WATER & DUST RESISTANT
		E	230	F	3R	OUTDOOR, RAINPROOF, SLEET & ICE RESISTANT
		F	240	G	4	INDOOR/OUTDOOR, WATERTIGHT & DUSTTIGHT
		G	277	H	4X	TYPE 4 PLUS CORROSION RESISTANCE (STAINLESS STEEL)
		H	380	J	4X	TYPE 4 PLUS CORROSION RESISTANCE (FIBERGLASS)
		J	400	K	7	EXPLOSION PROOF
		K	415	L	12	INDOOR, INDUSTRIAL ENVIRONMENTS, OILTIGHT & DUSTTIGHT
		L	440			
		M	460			
		N	480			
		P	550			
		Q	575			
		R	600			

CATALOG NUMBER _____
CERTIFIED TO ASCO® S.O. _____
BY _____
DATE _____

	BY	DATE
DRAWN BY	SDH	4/98
CHECKED		
DRAFTING APPROVAL		
ENGR. APPROVAL	SDH	4/98

MANUFACTURING TOLERANCES TO BE IN ACCORDANCE WITH ASCO PROCEDURE MP-1-003. FOR PLASTIC PARTS SEE MP-3-055.

ASSEM. REF. NO.

PROPERTY OF AUTOMATIC SWITCH COMPANY. USE PERMITTED FOR OUR WORK ONLY. ALL RIGHTS OF DESIGN OR INVENTION ARE RESERVED.

Automatic Switch Co.
FLORHAM PARK, NEW JERSEY 07932 PRINTED IN U.S.A.

ISSUE				
—	147921	SDH	SDH	4/98
CHANGE LETTER	ECN NO.	BY	APP.	DATE

PROJECT NAME:
WIRING DIAGRAM
GROUP 5 CONTROLS
7000 SERIES (7ATS)

THIRD ANGLE PROJECTION

SUBSIDIARY DISTRIBUTION
AC AH AM AJ AL
CH AV AA PS AR
AC AP AC AS

COMPUTER GENERATED DRAWING

SCALE 1:1 FILE

SIZE DWG. NO.
DS617408

CHANGE LETTER — ECN NO. 147921 SHEET 1 OF 6

Katolight Service - Master Repair Manual - Page 3883

FIELD CONNECTIONS

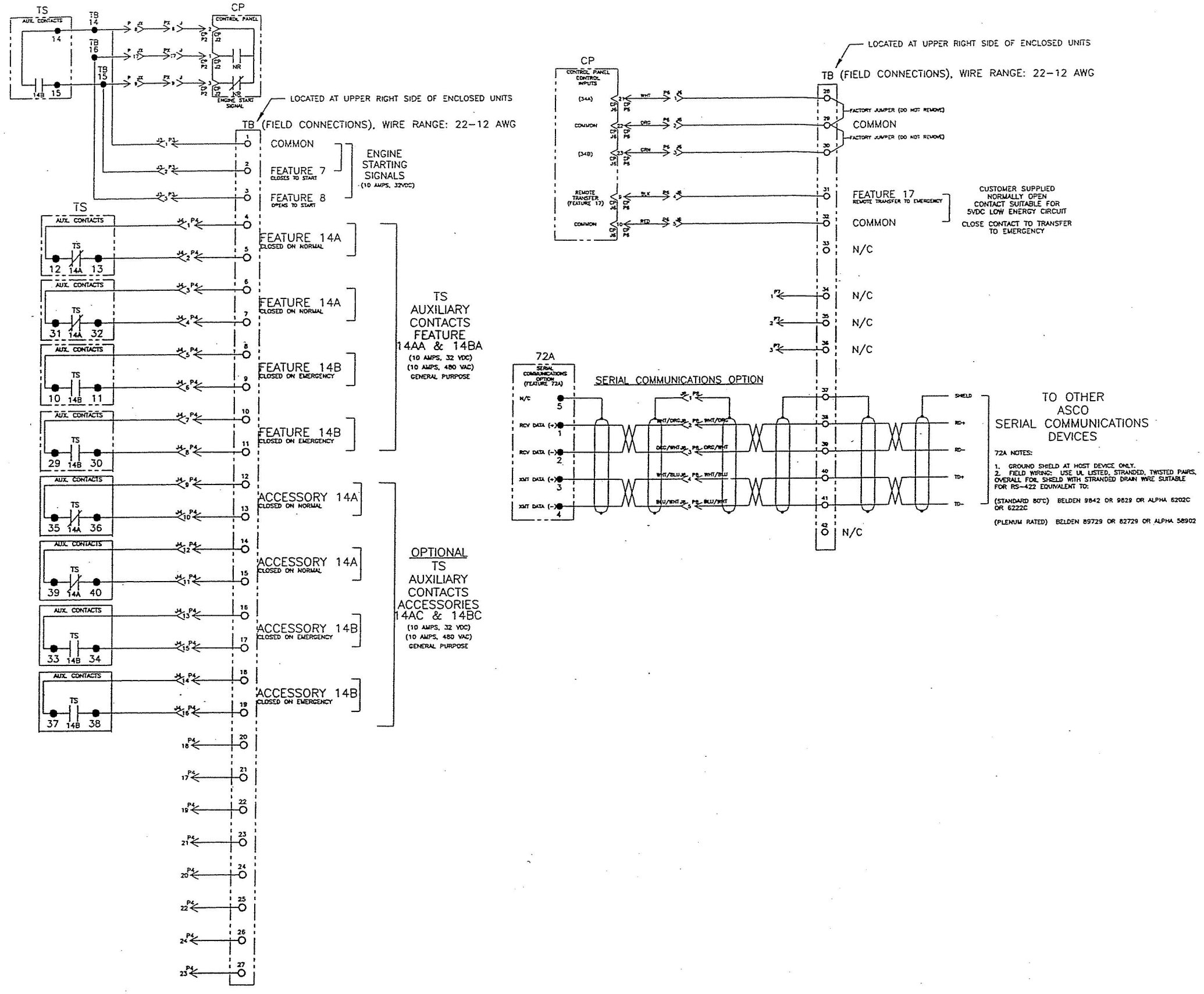

PROJECT NAME:		— 147921 SDH SDH 4/98 ISSUE	
WIRING DIAGRAM		CHANGE LETTER / ECN NO. / BY / APP. / DATE	
7000 SERIES (7ATS)		SUBSEQUENT DISTRIBUTION	
GROUP 5 CONTROLS		THIRD ANGLE PROJECTION	
DRAWN BY: SDH 4/98	MANUFACTURING TOLERANCES TO BE IN ACCORDANCE WITH ASCO PROCEDURE BP-1-803. FOR PLASTIC PARTS SEE BP-1-055	ASSEM. REF. NO.	COMPUTER GENERATED DRAWING
CHECKED			SCALE 1:1 SIZE
DRAFTING APPROVAL	PROPERTY OF AUTOMATIC SWITCH COMPANY. USE PERMITTED FOR OUR WORK ONLY. ALL RIGHTS OF DESIGN OR INVENTION ARE RESERVED.		DWG. NO. DS617408
FINAL APPROVAL: SDH 4/98	Automatic Switch Co. FLORHAM PARK, NEW JERSEY 07932 PRINTED IN U.S.A.		CHANGE LETTER — ECN NO. 147921 SHEET 2 OF 2

Katolight Service - Master Repair Manual - Page 3884

MAIN POWER POLES

TS OPERATOR CIRCUIT

EMERGENCY

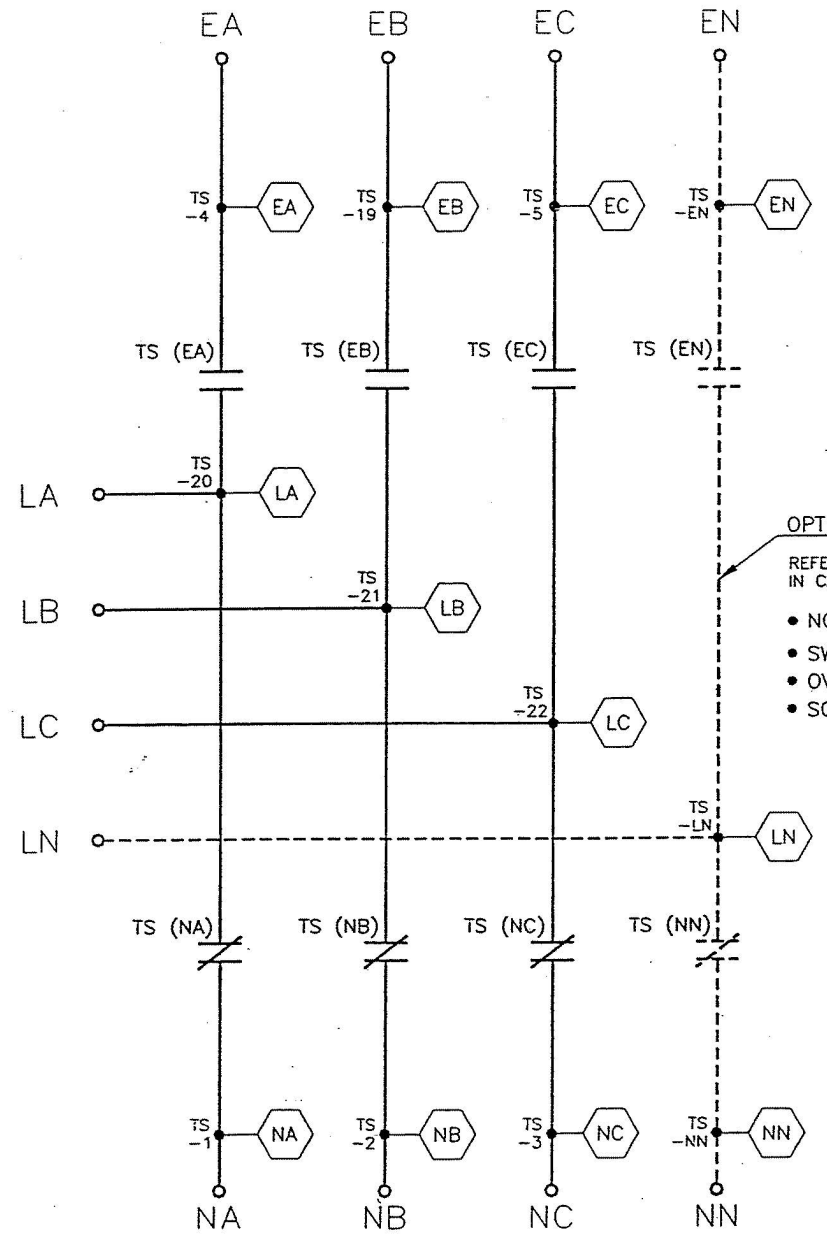

NORMAL

OPTIONAL NEUTRAL TYPES

REFER TO "EXPLAINATION OF CATALOG NUMBER CODES" IN CATALOG NUMBER CHART ON SHEET 1.

- NONE
- SWITCHING CONTACTS
- OVERLAPPING CONTACTS
- SOLID BUS PLATE

NOTE:
ATS SHOWN CLOSED ON NORMAL SOURCE.

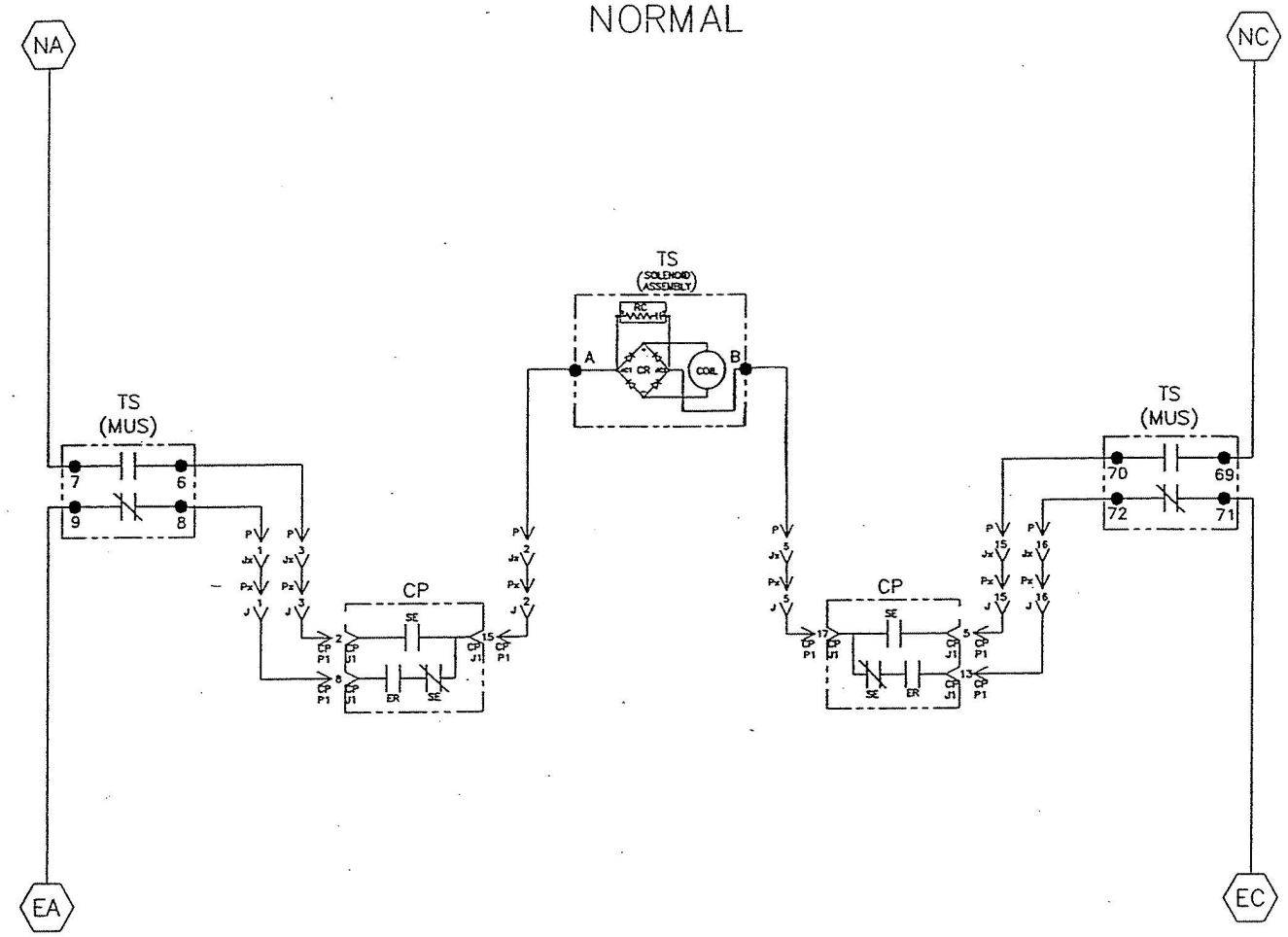

EMERGENCY

TS (MUS) CONTACTS				
TS	SOLENOID POSITION			
	CLOSED BEFORE NORMAL TDO>		< BEFORE TDC	OPEN
7-6			X	X
69-70			X	X
8-9	X	X		
71-72	X	X		

PROJECT NAME:		—	147921 SDH SDH 4/98 ISSUE
WIRING DIAGRAM		CHANGE LETTER	ECN NO. BY APP. DATE
7000 SERIES (7ATS)		SUPPLEMENTARY DISTRIBUTION	
GROUP 5 CONTROLS		AC AM AM AJ AL	
THIRD ANGLE PROJECTION		CA AV AL PS AR	
ASSEM. REF. NO.		AE AP AC AS	
DRAWN BY SDH 4/98	MANUFACTURING TOLERANCES TO BE IN ACCORDANCE WITH ASCO PROCEDURE MP-1-003. FOR PLASTIC PARTS SEE MP-1-005	COMPUTER GENERATED DRAWING	
CHECKED	PROPERTY OF AUTOMATIC SWITCH COMPANY. USE PERMITTED FOR OUR WORK ONLY. ALL RIGHTS OF DESIGN OR INVENTION ARE RESERVED.	SCALE 1:1	FILE
DESIGN APPROVAL		SIZE D	DWG. NO. DS617408
PROD. APPROVAL SDH 4/98	Automatic Switch Co. FLORHAM PARK, NEW JERSEY 07932 PRINTED IN U.S.A.	CHANGE LETTER —	ECN NO. 147921 SHEET 3 OF 6

Katolight Service - Master Repair Manual - Page 3885

NORMAL SOURCE CIRCUITS

NORMAL

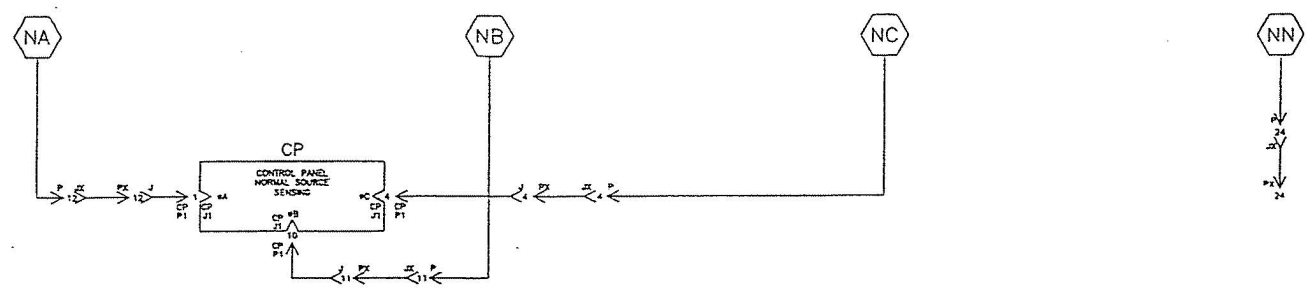

EMERGENCY SOURCE CIRCUITS

EMERGENCY

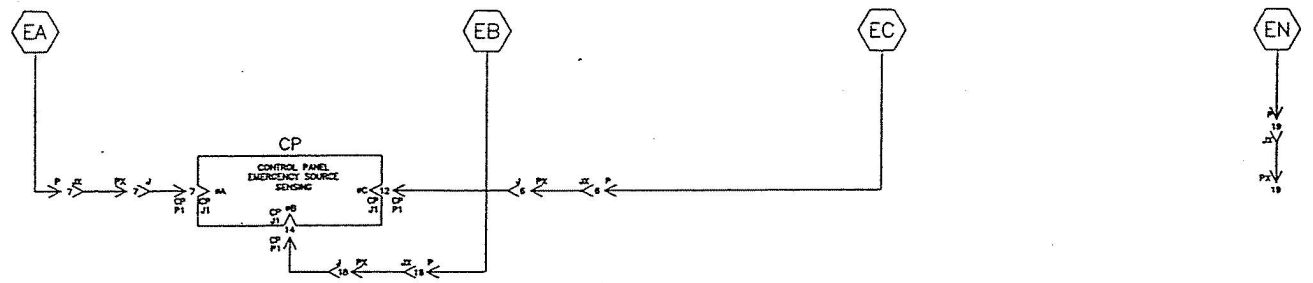

LOAD TERMINAL CIRCUITS

LOAD



CONTROL SIGNALS & INDICATION

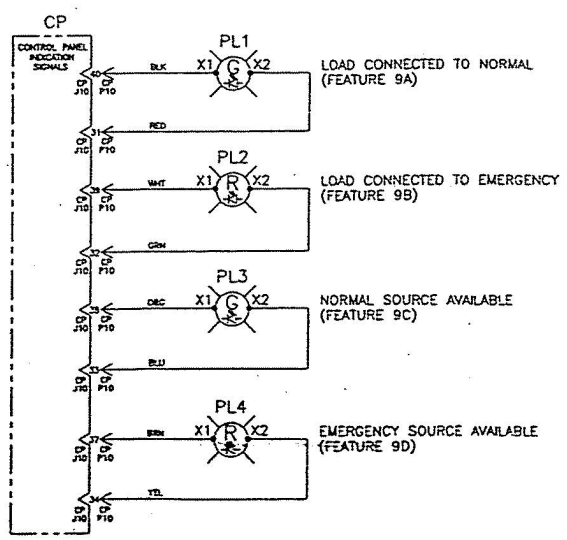

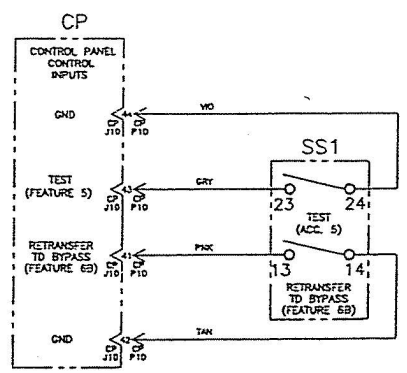

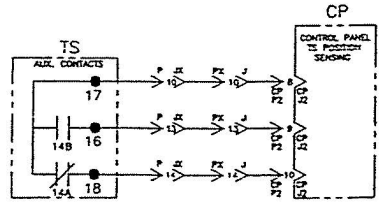

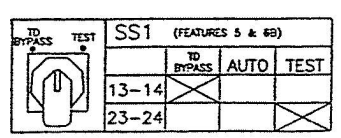

—	147921	SDH	SDH	4/98			
CHANGE LETTER	ECN NO.	BY	APP.	DATE			

PROJECT NAME:

WIRING DIAGRAM
7000 SERIES (ATS)
GROUP 5 CONTROLS

THIRD ANGLE PROJECTION

SUBSIDIARY DISTRIBUTION

AC	AN	AM	AJ	AL			
CH	AV	AA	PS	AR			
AG	AP	AC	AS				

COMPUTER GENERATED DRAWING

	BY	DATE
DRAWN BY	SDH	4/98
CHECKED		
DRAFTING APPROVAL		
ENGR. APPROVAL	SDH	4/98

MANUFACTURING TOLERANCES TO BE IN ACCORDANCE WITH ASCO PROCEDURE NP-M-003, FOR METRIC PARTS SEE NP-M-005

ASSEM. REF. NO.

PROPERTY OF AUTOMATIC SWITCH COMPANY. USE PERMITTED FOR OUR WORK ONLY. ALL RIGHTS OF DESIGN OR INVENTION ARE RESERVED.

Automatic Switch Co.
FLORHAM PARK, NEW JERSEY 07932 PRINTED IN U.S.A.

SCALE 1:1 FILE

SIZE D DWG. NO. DS617408

CHANGE LETTER — ECN NO. 147921 SHEET 4 OF 6

Katolight Service - Master Repair Manual - Page 3886

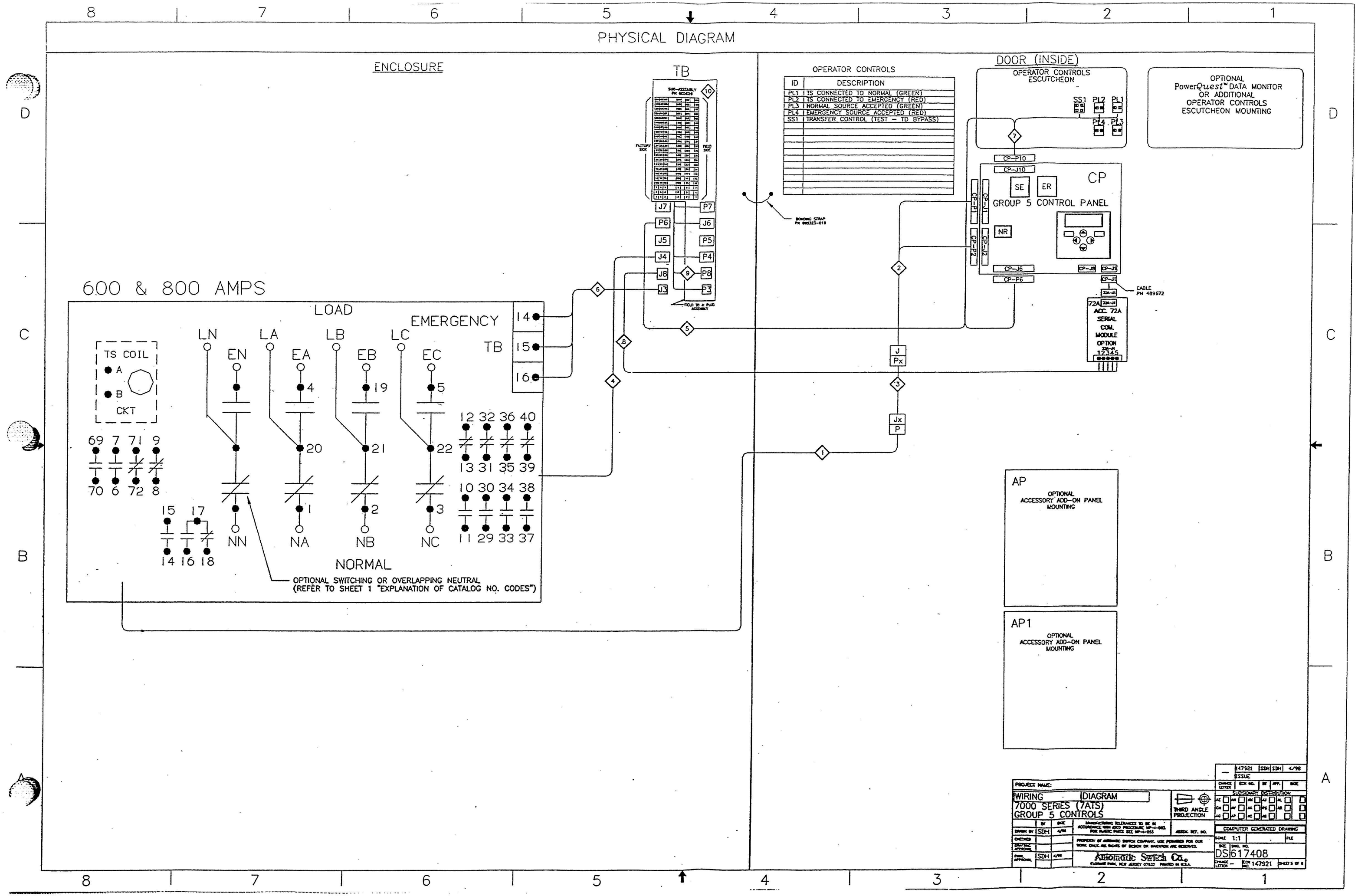
PHYSICAL DIAGRAM
ENCLOSURE
TB
OPERATOR CONTROLS
ID | DESCRIPTION
PL1 | TS CONNECTED TO NORMAL (GREEN)
PL2 | TS CONNECTED TO EMERGENCY (RED)
PL3 | NORMAL SOURCE ACCEPTED (GREEN)
PL4 | EMERGENCY SOURCE ACCEPTED (RED)
SS1 | TRANSFER CONTROL (TEST – TD BYPASS)
DOOR (INSIDE)
OPERATOR CONTROLS ESCUTCHEON
OPTIONAL PowerQuest™ DATA MONITOR OR ADDITIONAL OPERATOR CONTROLS ESCUTCHEON MOUNTING
CP
GROUP 5 CONTROL PANEL
SE
ER
NR
CABLE PN 489672
72A ACC. 72A SERIAL COM. MODULE OPTION
600 & 800 AMPS
LOAD
EMERGENCY
TB
TS COIL
CKT
LN
LA
LB
LC
EN
EA
EB
EC
NN
NA
NB
NC
NORMAL
OPTIONAL SWITCHING OR OVERLAPPING NEUTRAL (REFER TO SHEET 1 "EXPLANATION OF CATALOG NO. CODES")
AP
OPTIONAL ACCESSORY ADD-ON PANEL MOUNTING
AP1
OPTIONAL ACCESSORY ADD-ON PANEL MOUNTING
PROJECT NAME:
WIRING DIAGRAM
7000 SERIES (7ATS)
GROUP 5 CONTROLS
THIRD ANGLE PROJECTION
COMPUTER GENERATED DRAWING
SCALE 1:1
DS 617408
Automatic Switch Co.
147921 SDH SDH 4/98
ISSUE

WIRE RUN LISTING

① HARNESS LOCATOR

BOX CHECKED IF HARNESS IS ACCEPTED ☐

HARNESS 451580 (P) MAIN TS

WIRE No.		CLR	AWG
1	TS-8,P-1		16
2	TS-A,P-2		
3	TS-6,P-3		
4	TS-3,P-4		
5	TS-B,P-5		
6	TS-5,P-6		
7	TS-4,P-7		
8	TB/TS-14,P-8		
9	TB/TS-15,P-9		
10	TS-17,P-10		
11	TS-2,P-11		
12	TS-1,P-12		
13	TS-16,P-13		
14	TS-18,P-14		
15	TS-70,P-15		
16	TS-72,P-16		
17	TS-4,TS-9		
18	TS-7,TS-1		
20	TS-3,TS-69		
21	TS-5,TS-71		
8	TS-14,TB/TS-14		
9	TS-15,TB/TS-15		
24	TB/TS-16,P-17		
25	TS-19,P-18		
26	TS-EN,P-19		
27	TS-20,P-20		
28	TS-21,P-21		
29	TS-22,P-22		
30	TS-1N,P-23		
31	TS-NN,P-24		

② HARNESS LOCATOR

BOX CHECKED IF HARNESS IS ACCEPTED ☐

HARNESS 483763 (J,CP-P1,CP-P2) CONTROL PANEL

WIRE No.		CLR	AWG
1	J-1,CP-P1-8		16
2	J-2,CP-P1-15		
3	J-3,CP-P1-2		
4	J-4,CP-P1-4		
5	J-5,CP-P1-17		
6	J-6,CP-P1-12		
7	J-7,CP-P1-7		
8	J-8,CP-P2-2		
9	J-9,CP-P2-3		
10	J-10,CP-P2-8		
11	J-11,CP-P1-10		
12	J-12,CP-P1-1		
13	J-13,CP-P2-9		
14	J-14,CP-P2-10		
15	J-15,CP-P1-5		
16	J-16,CP-P1-13		
24	J-17,CP-P2-1		
25	J-18,CP-P1-14		
	ADD WIRES		
26	J-19		
27	J-20		
28	J-21		
29	J-22		
30	J-23		
31	J-24		

③ HARNESS LOCATOR

BOX CHECKED IF HARNESS IS ACCEPTED ☐

HARNESS 309320-005 (Px-Jx) OPTIONAL 8" EXTENSION HARNESS

WIRE No.		CLR	AWG
1	Px-1,Jx-1		16
2	Px-2,Jx-2		
3	Px-3,Jx-3		
4	Px-4,Jx-4		
5	Px-5,Jx-5		
6	Px-6,Jx-6		
7	Px-7,Jx-7		
8	Px-8,Jx-8		
9	Px-9,Jx-9		
10	Px-10,Jx-10		
11	Px-11,Jx-11		
12	Px-12,Jx-12		
13	Px-13,Jx-13		
14	Px-14,Jx-14		
15	Px-15,Jx-15		
16	Px-16,Jx-16		
24	Px-17,Jx-17		
25	Px-18,Jx-18		
26	Px-19,Jx-19		
27	Px-20,Jx-20		
28	Px-21,Jx-21		
29	Px-22,Jx-22		
30	Px-23,Jx-23		
31	Px-24,Jx-24		

④ HARNESS LOCATOR

BOX CHECKED IF HARNESS IS ACCEPTED ☒

HARNESS (J4) AUX. CONTACTS

WIRE No.		CLR	AWG
40	J4-1,TS-12		16
41	J4-2,TS-13		
42	J4-3,TS-31		
43	J4-4,TS-32		
44	J4-5,TS-10		
45	J4-6,TS-11		
46	J4-7,TS-29		
47	J4-8,TS-30		
48	J4-9,TS-35		
49	J4-10,TS-36		
50	J4-11,TS-40		
51	J4-12,TS-39		
52	J4-13,TS-33		
53	J4-14,TS-37		
54	J4-15,TS-34		
55	J4-16,TS-38		
56	J4-17		
57	J4-18		
58	J4-19		
59	J4-20		
60	J4-21		
61	J4-22		
62	J4-23		
63	J4-24		

OPTIONAL AUX. CONTACTS ACC. 14AC/14BC

⑤ HARNESS LOCATOR

BOX CHECKED IF HARNESS IS ACCEPTED ☐

HARNESS 619510-005 (P6) FIELD INPUTS

WIRE No.		CLR	AWG
73	P6-4,CP-P6-9	BLK	22 (12 COND)
74	P6-5,CP-P6-10	RED	
70	P6-1,CP-P6-21	WHT	
72	P6-3,CP-P6-23	GRN	
71	P6-2,CP-P6-22	ORG	
	ADD WIRES		
75	P6-6		
76	P6-7		
77	P6-8		
78	P6-9		
79	P6-10		
80	P6-11		
81	P6-12		
82	P6-13		
83	P6-14		
84	P6-15		
85	P6-16		
86	P6-17		
87	P6-18		
88	P6-19		
89	P6-20		
90	P6-21		
91	P6-22		
92	P6-23		
93	P6-24		

⑥ HARNESS LOCATOR

BOX CHECKED IF HARNESS IS ACCEPTED ☒

HARNESS 619510-031 (J3,TB1) ENGINE START

WIRE No.		CLR	AWG
8	J3-1,TB/TS-14		16
9	J3-2,TB/TS-15		
24	J3-3,TB/TS-16		
	ADD WIRES		
185	J3-4		

⑦ HARNESS LOCATOR

BOX CHECKED IF HARNESS IS ACCEPTED ☐

HARNESS 617589-001 (CP-P10) DOOR CONTROLS & INDICATORS

WIRE No.		CLR	AWG
100	CP-P10-31,PL1-X2	RED	22 (12 COND)
108	CP-P10-32,PL2-X2	GRN	
109	CP-P10-33,PL3-X2	BLU	
110	CP-P10-34,PL4-X2	YEL	
105	CP-P10-37,PL4-X1	BRN	
104	CP-P10-38,PL3-X1	ORG	
103	CP-P10-39,PL2-X1	WHT	
102	CP-P10-40,PL1-X1	BLK	
107	CP-P10-41,SS1-13	PNK	
101	CP-P10-42,SS1-14	TAN	
106	CP-P10-43,SS1-23	GRY	
111	CP-P10-44,SS1-24	VIO	

⑧ HARNESS LOCATOR

BOX CHECKED IF HARNESS IS ACCEPTED ☐

HARNESS 605454-005 (J8) OPTIONAL SERIAL I/O

WIRE No.		CLR	AWG
120	J8-1,CP-11	SHLD	22 (4 COND)
121	J8-2,CP-12	WHT/ORG	
122	J8-3,CP-13	ORG/WHT	
123	J8-4,CP-14	WHT/BLU	
124	J8-5,CP-15	BLU/WHT	
	REMOVE WIRES		
120	J8-1,CP-11	SHLD	22 (4 COND)
121	J8-2,CP-12	WHT/ORG	
122	J8-3,CP-13	ORG/WHT	
123	J8-4,CP-14	WHT/BLU	
124	J8-5,CP-15	BLU/WHT	
	ADD WIRES		
120	J8-1,SHLD	SHLD	22 (4 COND)
121	J8-2,72A-1	WHT/ORG	
122	J8-3,72A-2	ORG/WHT	
123	J8-4,72A-3	WHT/BLU	
124	J8-5,72A-4	BLU/WHT	
125	J8-6		
126	J8-7		
127	J8-8		
128	J8-9		

⑨ HARNESS LOCATOR

BOX CHECKED IF HARNESS IS ACCEPTED ☐

HARNESS 605454-007 (P8,TB) OPTIONAL SERIAL I/O

WIRE No.		CLR	AWG
120	P8-1,TB-37	SHLD	22 (4 COND)
121	P8-2,TB-38	WHT/ORG	
122	P8-3,TB-39	ORG/WHT	
123	P8-4,TB-40	WHT/BLU	
124	P8-5,TB-41	BLU/WHT	
125	P8-6		
126	P8-7		
127	P8-8		
128	P8-9		

⑪ HARNESS LOCATOR

BOX CHECKED IF HARNESS IS ACCEPTED ☐

HARNESS (J7) OPTIONAL FIELD OUTPUTS

WIRE No.		CLR	AWG
131	J7-1		16
132	J7-2		
133	J7-3		
134	J7-4		
135	J7-5		
136	J7-6		
137	J7-7		
138	J7-8		
139	J7-9		
140	J7-10		
141	J7-11		
142	J7-12		
143	J7-13		
144	J7-14		
145	J7-15		
146	J7-16		
147	J7-17		
148	J7-18		
149	J7-19		
150	J7-20		
151	J7-21		
152	J7-22		
153	J7-23		
154	J7-24		

⑩ HARNESS LOCATOR

BOX CHECKED IF HARNESS IS ACCEPTED ☒

SUB-ASSEMBLY 605659 (P3,P4,J8,P7,TB) STD. FIELD TB

WIRE No.		CLR	AWG
8	TB-1,P3-1		16
9	TB-2,P3-2		
24	TB-3,P3-3		
40	TB-4,P4-1		
41	TB-5,P4-2		
42	TB-6,P4-3		
43	TB-7,P4-4		
44	TB-8,P4-5		
45	TB-9,P4-6		
46	TB-10,P4-7		
47	TB-11,P4-8		
48	TB-12,P4-9		
49	TB-13,P4-10		
51	TB-14,P4-12		
50	TB-15,P4-11		
52	TB-16,P4-13		
54	TB-17,P4-15		
53	TB-18,P4-14		
55	TB-19,P4-16		
57	TB-20,P4-18		
56	TB-21,P4-17		
58	TB-22,P4-19		
60	TB-23,P4-21		
59	TB-24,P4-20		
61	TB-25,P4-22		
63	TB-26,P4-24		
62	TB-27,P4-23		
70	TB-28,J6-1		
71	TB-29,J6-2		
72	TB-30,J6-3		
73	TB-31,J6-4		
74	TB-32,J6-5		
131	TB-34,P7-1		
132	TB-35,P7-2		
133	TB-36,P7-3		
	JUMPERS		
	TB-28,TB-29		
	TB-29,TB-30		
	TB-31,TB-32		
	REMOVE WIRES		
	TB-31,TB-32		
	ADD WIRES		
185	P3-4		
75	J6-6		
76	J6-7		
77	J6-8		
78	J6-9		
79	J6-10		
80	J6-11		
81	J6-12		
82	J6-13		
83	J6-14		
84	J6-15		
85	J6-16		
86	J6-17		
87	J6-18		
88	J6-19		
89	J6-20		
90	J6-21		
91	J6-22		
92	J6-23		
93	J6-24		
134	P7-4		
135	P7-5		
136	P7-6		
137	P7-7		
138	P7-8		
139	P7-9		
140	P7-10		
141	P7-11		
142	P7-12		
143	P7-13		
144	P7-14		
145	P7-15		
146	P7-16		
147	P7-17		
148	P7-18		
149	P7-19		
150	P7-20		
151	P7-21		
152	P7-22		
153	P7-23		
154	P7-24		

ADDITIONAL WIRES

WIRE No.		CLR	AWG

CHANGE LETTER	ECN NO.	BY	APP.	DATE
B	149211	KD	BK	10/98
	SEE ECN			
A	148905	KD	JPB	7/98
	SEE ECN			
—	147921	SDH	SDH	4/98
	ISSUE			

PROJECT NAME:

WIRING DIAGRAM
7000 SERIES (7ATS)
GROUP 5 CONTROLS

THIRD ANGLE PROJECTION

	BY	DATE
DRAWN BY	SDH	4/98
CHECKED		
ENGINEERING APPROVAL		
FINAL APPROVAL	SDH	4/98

MANUFACTURING TOLERANCES TO BE IN ACCORDANCE WITH ASCO PROCEDURE SP-1-003 FOR PLASTIC PARTS SEE SP-1-035

SERIAL REF. NO.

PROPERTY OF ASCO POWER TECHNOLOGIES. USE PERMITTED FOR OUR WORK ONLY. ALL RIGHTS OF DESIGN OR INVENTION ARE RESERVED.

ASCO. ASCO Power Technologies, L.P. FLORHAM PARK, NEW JERSEY 07932 U.S.A.

SUBSIDIARY DISTRIBUTION

COMPUTER GENERATED DRAWING

SCALE ACAD FILE A5

SIZE DWG. NO. DS617408

CHANGE LETTER B ECN NO. 149211 SHEET 6 of 6

Katolight Service - Master Repair Manual - Page 3888

ASCO® 940

Automatic Transfer Switch

with Microprocessor Control Panel Group 6 or 7

OPERATOR'S MANUAL

INCLUDES:

• Installation • Testing • Service

• Optional Accessories • Diagrams

for switches rated 30 through 4000 amps

ASCO® Controls are designed and manufactured by Automatic Switch Co., Florham Park, New Jersey 07932, Telephone (201) 966-2070
381333-051
1D4990 R4

This Operator's Manual applies to ASCO® 940 Automatic Transfer Switches (with Group 6 or 7 Microprocessor Control Panels) 30 through 4000 amps in the following sizes: 30, 70, 100, 150*, 260, 400*, 600, 800*, 1000*, 1200, 1600, 2000*, 3000, and 4000* amps.

*Shown below.

ASCO 940s are Listed under Underwriter's Laboratories UL 1008 Standard for Safety for Automatic Transfer Switches and are Certified by the Canadian Standards Association (CSA). In addition, all commonly used accessories are UL Component Recognized, which assures that ASCO automatic transfer switches with add-on accessories meet OSHA Safety Requirements and will be acceptable to electrical inspectors.

ASCO 940 switches are suitable for emergency and standby system applications. They meet emergency system rating requirements as defined in National Electrical Code (NEC) Article 700 and UL 1008. Also, they are suitable for the requirements of NEC Article 517 – Health Care Facilities, NEC Article 701 – Legally Required Standby Systems, NEC Article 702 – Optional Standby Systems, NFPA 99 Health Care Facilities 1984, and NFPA 110 Emergency and Standby Power Systems.

A selection of various sizes of ASCO switches is shown here.

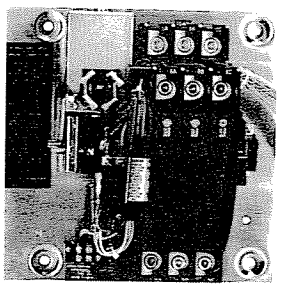

150 amp

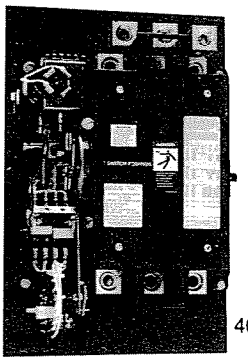

400 amp

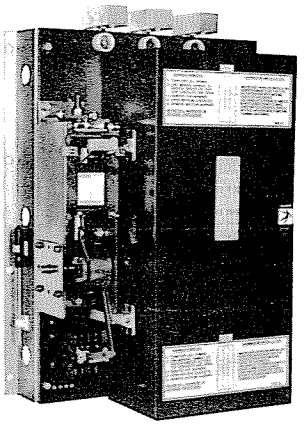

800 amp

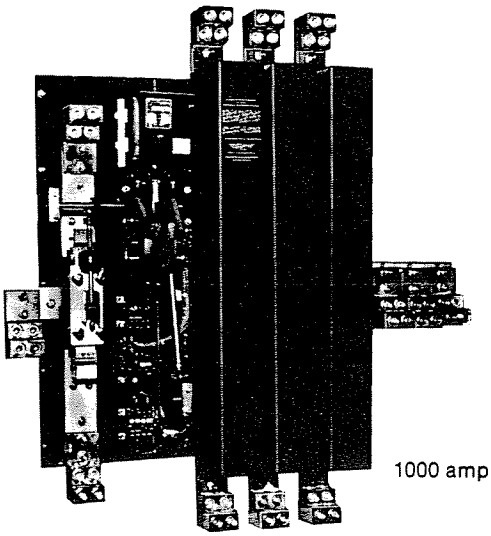

1000 amp

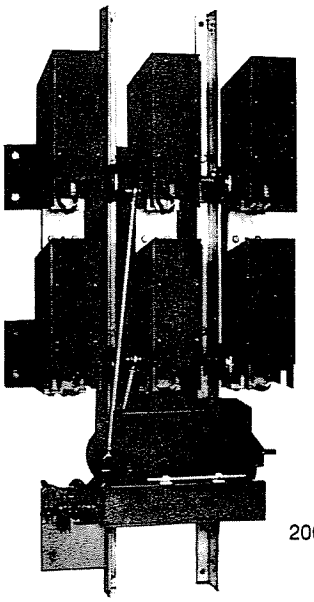

2000 amp

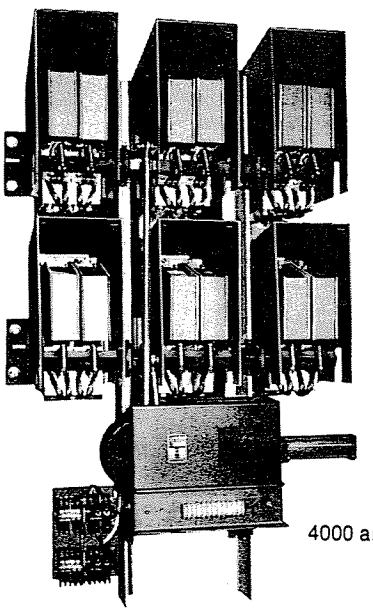

4000 amp

The **GROUP 6** or **7 CONTROL PANEL**, shown here, can be used with all ASCO 940

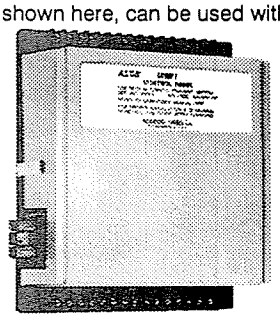

automatic transfer switches from 30 through 4000 amps. Group 6 is single phase; Group 7 is three phase.

The microprocessor control panel is designed to withstand transient overvoltages. It meets the proposed NEMA Standard ICS 1–109 impulse withstand voltage test and ANSI/IEEE C37.90a–1974 voltage surge withstand capability.

© Automatic Switch Co. MCMXCIII All Rights Reserved.

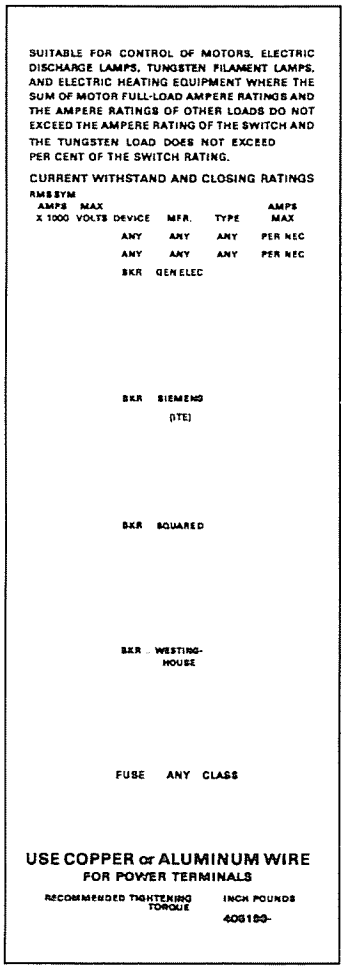

Typical Rating Label

Each Automatic Transfer Switch contains a rating label to define the loads and fault circuit withstand/closing ratings. Refer to the label on the Transfer Switch for specific values.

⚠ **WARNING:** Do not exceed the values on the rating label. Exceeding the rating could cause serious damage or personal injury.

Nameplate

The nameplate (shown below) on the Transfer Switch includes data for each specific ASCO 940 switch. Use the switch only within the limits shown on this nameplate. A typical Catalog Number is shown below with its elements explained:

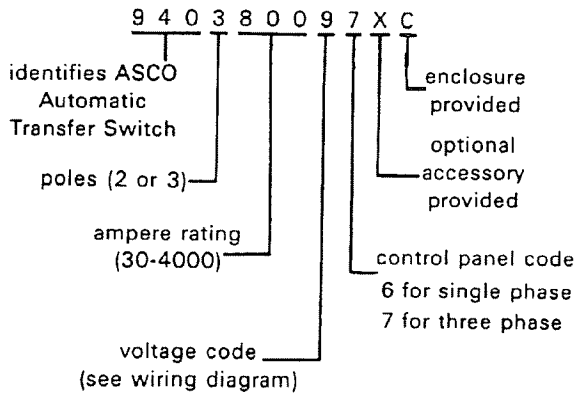

Typical only Do not use these values.

Refer to label on the Transfer Switch



TABLE OF CONTENTS

section–page

INSTALLATION 1–1
Mounting 1–1
Line Connections 1–1
Auxiliary Circuits 1–2
Harnesses 1–2
Engine Starting Contacts 1–2
Functional Test 1–3

SEQUENCE OF OPERATION 2–1
Transfer to Emergency 2–1
Retransfer to Normal 2–1

TESTING & SERVICE 3–1
Preventive Maintenance 3–1
Transfer Test 3–1
Disconnecting the Control Panel 3–1
Manual Load Transfer 3–2
Trouble–Shooting 3–2

ADJUSTMENTS 4–1
Time Delay Adjustment 4–1
Sensor Adjustments 4–1
How to Change a Setting 4–2

OPTIONAL ACCESSORIES 5–1
Remote Control 5–1
Optional Manual Control 5–1
Optional Plant Exerciser 5–2
Auxiliary Contacts 5–4
Optional Source Available Signal Lights . 5–4
Optional Motor Load Transfer 5–5
Optional Selective Load Disconnect 5–6

DIAGRAMS 6–1
ASCO Service Centers ASI3253
INDEX ..... inside back cover



Only experienced licensed electricians should install the switch. All standard safety practices should be observed.

⚠ **DANGER: is used in this manual to warn of high voltages capable of causing shock, burns, or death.**

⚠ **WARNING:** is used in this manual to warn of possible personal injury.

⚠ *CAUTION: is used in this manual to warn of possible equipment damage.*

Katolight Service - Master Repair Manual - Page 3891

SECTION 1
INSTALLATION

ASCO automatic transfer switches are factory wired and tested. Field installation simply requires mounting and connection of service cables, engine start signal wires, and auxiliary control circuits (if required).

> ⚠ *CAUTION: To prevent damage to open-type switches, use care when lifting them. Fasten lifting chains or hooks to the main structural parts of the switch, such as the main panel or mounting rails. Take care not to damage moving linkages, shafts, contacts, wires, and control contacts.*

Mounting

Composite Outline and Mounting Diagrams are furnished at the back of this manual. The diagrams shows all mounting details and instructions.

> ⚠ **WARNING:** Protect the switch from construction grit and metal chips to prevent malfunction or shortened life for the switch.

Mount automatic transfer switch vertically to a rigid supporting structure. Level all mounting points using flat washers behind holes to avoid forced distortion of switch.

Mount open-type 260-400 amp transfer switches on the supplied insulator backing piece. It must be installed behind the transfer switch. See Figure 1–1.

> ⚠ **WARNING:** Be sure to install the insulator piece behind 260-400 amp switches.

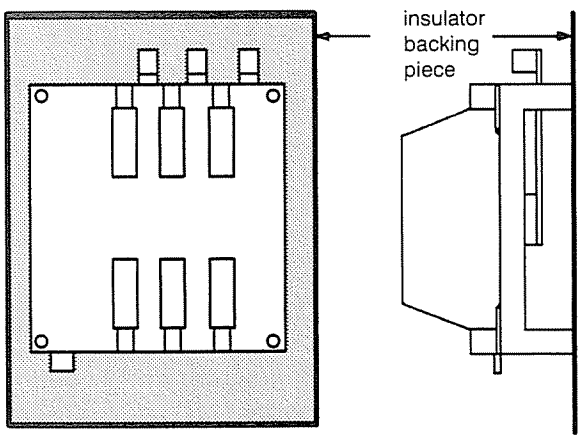

Figure 1–1. Insulator for 260-400 amp switches.

Enclosed switches have the control panel mounted on the cabinet door. For customer furnished enclosures (open-type switches), mount the control panel to the right of the transfer switch, preferably on the inside surface of the enclosure door. Do not exceed the length of the harness; provide stress relief where required.

An add-on panel may be provided for certain optional accessories. It is mounted below the control panel. For open-type switches only, the control panel and add-on panel are usually supplied on mounting rails. Refer to the *Composite Outline and Mounting Diagrams* for details.

Line Connections

Composite Elementary Wiring Diagrams are furnished at the back of this manual. All wiring must be made per the National Electrical Code and local codes.

> ⚠ **DANGER: De-energize the conductors before making any line or auxiliary circuitry connections. Be sure that Normal and Emergency line connections are in proper phase rotation. Also place engine generator starting control in the off position. Make sure the engine generator is not in operation.**

Three cable spacers are included with 150 ampere transfer switches. When installing power cables, run the cables through the cable spacers as shown in Figure 1–2. Position the cable spacers within 1½ inches from the terminal lugs.

> ⚠ *CAUTION: The cable spacers must be located as shown for 150 amp switches.*

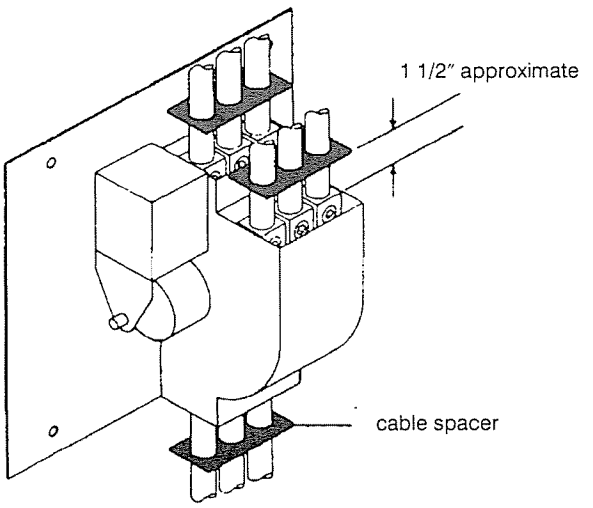

Figure 1–2. Cable spacer for 150 amp switch.

Do not run cables behind the switch. Cables can be bundled on the right side of the switch. Maintain proper electrical clearance between the live metal parts and grounded metal: ½" minimum for 30-400 amps, 1" minimum over 400 amps.

It is not necessary to remove the barriers from the transfer switch. If you do remove the them, however, reinstall them carefully.

Katolight Service - Master Repair Manual - Page 3892

Connect source and load conductors to clearly marked switch terminal lugs. Be careful when stripping insulation from cables; avoid nicking or ringing the conductor. Remove surface oxides from cables by cleaning with a wire brush. Follow cable manufacturer's instructions when aluminum conductor is used. Apply joint compound to conductor, then carefully wipe away excess compound. Tighten cable lugs to torque specified on the rating label.

Auxiliary Circuits

Connect auxiliary circuit wires to appropriate terminals on the transfer switch. External circuits can include the toggle switch, auxiliary contacts on the transfer switch, and optional accessories. The toggle switch and optional accessories are already installed and wired on enclosed switches. For open-type switches the toggle switch is supplied loose. Be sure to connect the toggle switches correctly (so that a normally closed switch is not installed in a normally open circuit and vice versa). Refer to the Elementary Wiring Diagram.

Note any optional accessories that may be furnished on this switch. Make the necessary auxiliary connections by referring to **Section 5, Optional Accessories**. Also refer to any separate drawings and/or publications that may be packed with the switch.

Harnesses

All internal connections are made at the factory. The switch is connected to the control panel by a plug-in harness. Extension harnesses are available in standard lengths. The plug is already engaged on enclosed switches. For open-type switches, the plug must be engaged after installation is completed. Align the harness plug with the socket in the control panel and push them together until the latches click.

Engine Starting Contacts

The engine control contact connections are located on the transfer switch. Connect signal wires to terminals shown in Table 1-1 and in Figure 1–3 or Figure 1–4.

Control Panel Ground

On open-type switches, connect Control Panel terminal CP19 to equipment (cabinet or earth) ground. When the Control Panel is mounted on a door, a conductive strap must be used between the enclosure and the door. This connection provides proper grounding which does not rely upon the door hinges. On enclosed switches, this connection is already made.

⚠ *CAUTION: Control Panel must be grounded for proper operation.*

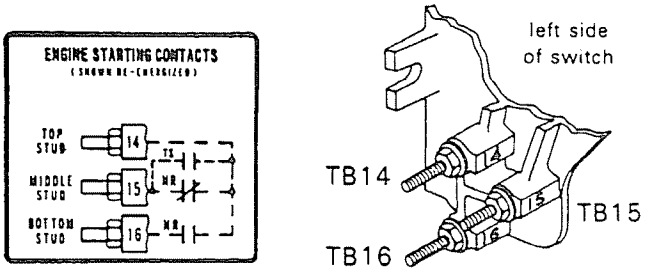

Figure 1–3. Engine starting contact label and location for 30 - 150 amp switches.

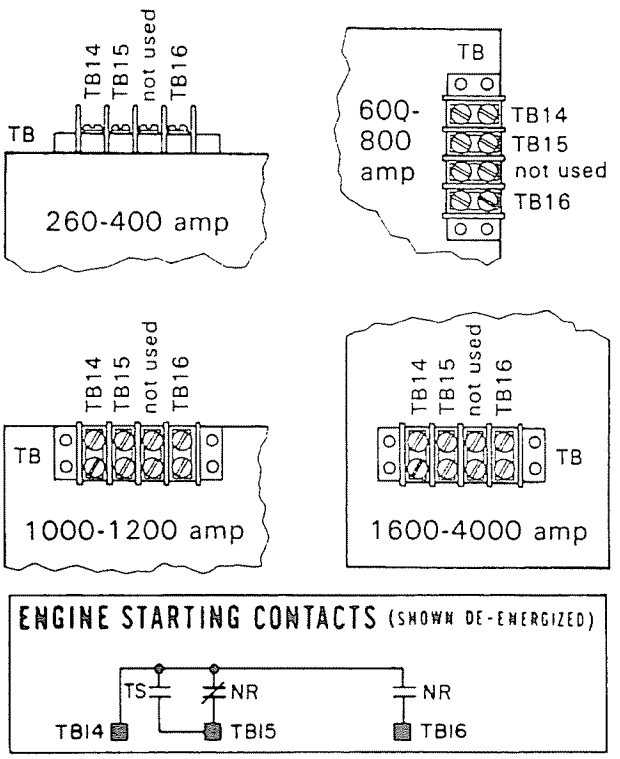

Figure 1–4. Engine starting contact label and locations for 260 - 4000 amp switches.

Table 1-1. Engine start connections.

Feature	When normal source fails	Terminals on transfer switch
7	contact closes	TB14 and TB15
8	contact opens	TB14 and TB16

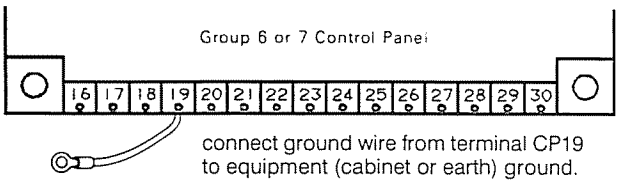

Figure 1–5. Ground Control Panel terminal CP19.

Functional Test

The Functional Test consists of three checks: manual operation, voltage checks, and electrical operation.

> ⚠ *CAUTION: Do these checks in the order presented to avoid damaging the switch.*

Read and understand all instructions on the Composite Elementary Wiring Diagrams and on labels affixed to the automatic transfer switch. Note any optional accessories that are provided with this switch, and review their operation before proceeding.

Manual Operation

A manual operator handle (detachable on 260 through 4000 ampere sizes) is provided on the Transfer Switch for maintenance purposes only. Manual operation of the switch must be checked before it is operated electrically.

> ⚠ **WARNING**: Do not manually operate the transfer switch until both power sources are disconnected: Open normal and emergency circuit breakers.

1. Select the appropriate switch amperage size below and follow the directions for installing the handle:

   30 through 150 ampere

   Grasp the permanently attached manual handle (left side of the operator) and turn it with thumb and fingers. See Figure 1–6.

   260 and 400 ampere

   Insert the manual handle into the hole in the shaft, left side of the operator. See Figure 1–7.

   600 and 800 ampere

   Insert the manual handle into the hole in the rotating weight. See Figure 1–8 .

   1000 through 4000 ampere

   Insert the manual handle into the hole in the rotating weight. See Figure 1–9 .

2. Move the handle as shown to manually operate the Transfer Switch. The switch should operate smoothly without binding. If it does not, check for shipping damage or construction debris.

3. Return the Transfer Switch to the *N* (normal) position. Remove manual operator handle (if detachable) and store it on the Transfer Switch in the place provided.

Continue the Functional Test on the next page.

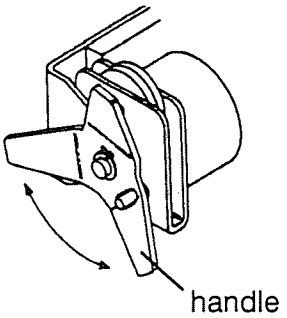

Figure 1–6. 30-150 amp switches.

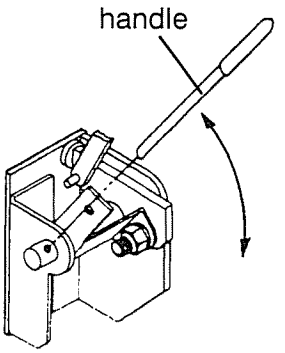

Figure 1–7. 260 and 400 amp switches.

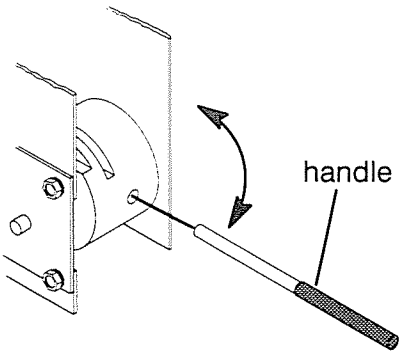

Figure 1–8. 600 and 800 amp switches.

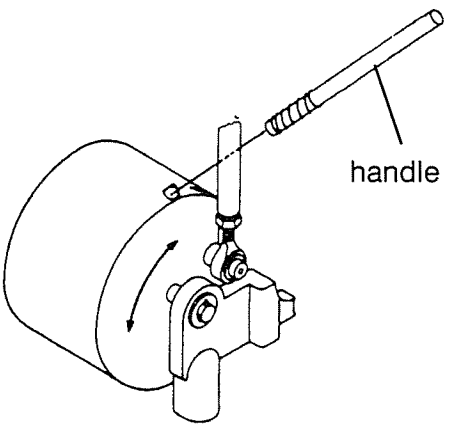

Figure 1–9. 1000 - 4000 amp switches.

Voltage Checks

First check nameplate on the transfer switch for rated voltage. It should be the same as the normal and emergency line voltages..

⚠ *CAUTION: Verify that the feeders have been connected to the proper lugs or bus plates.*

⚠ **DANGER: Use extreme caution when using a meter to measure voltages in the following steps. Do not touch power terminals; shock, burns, or death could result.**

1. Close the normal source circuit breaker. The *LOAD CONNECTED TO NORMAL* light should come on.
2. Use an accurate voltmeter to check phase to phase and phase to neutral voltages present at the Transfer Switch normal source terminals.
3. Close the emergency source circuit breaker. (Start the generator, if necessary.)
4. Use an accurate voltmeter to check phase to phase and phase to neutral voltages present at the Transfer Switch emergency source terminals.

If necessary, adjust the voltage regulator on the generator according to the manufacturer's recommendations. The Automatic Transfer Switch will respond only to the rated voltage specified on the nameplate.

5. Check phase rotation; it must be the same as the normal source.
6. Shut down the engine-driven generator. Then put the starting control selector switch (on the generator set) in the *automatic* position.
7. Close the cabinet door and tighten the screws.

Electrical Operation

This procedure will check the electrical operation of the Automatic Transfer Switch. Put engine starting control in *automatic* position.

⚠ **WARNING**: Close the cabinet door to prevent personal injury in case of electrical system fault.

Transfer Test

Both normal and emergency sources must be available.

1. Operate and hold the door-mounted Transfer Test switch until the engine starts and runs. This should happen within 15 seconds.
2. The transfer switch will operate to the Emergency position. If Feature 2B is used, the transfer will occur after a time delay (up to 5 minutes). The *LOAD CONNECTED TO EMERGENCY* light should come on; the *LOAD CONNECTED TO NORMAL* light should go off.
3. The transfer switch will operate back to the Normal position after Feature 3A time delay (up to 30 minutes). The *LOAD CONNECTED TO NORMAL* light should come on; the *LOAD CONNECTED TO EMERGENCY* light should go off.
4. Feature 2E allows the engine to run unloaded for a cool-down period (up to 60 minutes).

This completes the Functional Test of the ASCO 940. The engine-driven generator's starting control should be left in the *automatic* position.

SECTION 2
SEQUENCE OF OPERATION

*See the **Composite Elementary Wiring Diagram**. Note any Optional Accessories that may be furnished on this switch, and review their operation. Refer to any separate drawings and/or publications that may be packed with this switch.*

Transfer To Emergency

The sequence for load transfer to the emergency source begins automatically when the normal source voltage falls below the preset dropout point or when the **Transfer Test** switch (Feature 5) is operated. An under voltage condition on any phase of the normal source is detected by the sensor.

When the normal source voltage fails or the **Transfer Test** switch is operated, the SE relay de-energizes and relay NR begins its timing cycle (Feature 1). The NR relay is provided with a time delay on dropout to override momentary outages and prevent nuisance starting of the engine-driven generator. If the normal source voltage returns above the sensor dropout setting before the time delay expires, the NR relay timing cycle is reset to zero and relay SE energizes.

If the normal source voltage does not return above the sensor dropout setting before the time delay expires, the NR relay de-energizes and signals the engine-driven generator to start. At the same time, a voltage and frequency sensor begins monitoring the emergency source. The sensor will accept the emergency source only when both voltage and frequency reach preset pickup points. Usually about ten seconds elapse from dropout of the NR relay to acceptance by the sensor. This time span occurs because the engine-driven generator must crank, start, and run up to nominal pickup points. For this reason, if the **Transfer Test** switch is used it must be held for 15 seconds. If the emergency source is available immediately, the sensor may accept it as soon as NR relay drops out.

When the emergency source is accepted by the sensor, relay ER begins its timing cycle (Feature 2B). ER relay is provided with a an adjustable (0 to 5 minutes) time delay on pickup to delay transfer of the load to the emergency source, if desired.

ER relay energizes, the TS coil is energized, the transfer switch operates, and all switch contacts (mains, controls, auxiliaries) reverse position. The transfer switch is now supplying the load from the emergency source.

The transfer switch will remain in the Emergency position until the normal source is restored. If the Transfer Test switch is used, the transfer switch will remain on emergency until Feature 3A times out.

Retransfer to Normal

The sequence for load retransfer to the normal source automatically begins when the voltage sensor detects restoration of the normal source. The voltage level must rise above the preset pickup point on all phases before the sensor will accept the normal source.

When the normal source is accepted by the sensor, relay SE begins its timing cycle (Feature 3A). SE relay is provided with a time delay on pickup to prevent immediate load retransfer to the normal source. The delay insures that the normal source has stabilized before reconnection of vital loads. If the normal source voltage falls below the present dropout point before the time delay expires, the timing cycle is reset to zero. If the emergency source fails during the timing cycle, ER relay drops out and the load is immediately retransferred to the normal source, if that source is acceptable.

SE relay energizes and ER relay is dropped out. The TS coil is energized, the transfer switch operates, and all switch contacts (mains, controls, auxiliaries) reverse position. The transfer switch is now supplying the load from the normal source again.

Upon retransfer to the normal source, NR relay begins its timing cycle (Feature 2E). NR relay is provided with a time delay on pickup to keep the engine running for a cool-down period.

NR relay energizes after the time delay and signals the engine-driven generator to shut down. All circuits are reset for any future normal source failure.

Katolight Service - Master Repair Manual - Page 3896

SECTION 3
TESTING & SERVICE

TESTING

Operate the switch at least once a month by following the four-step **Electrical Operation Test** on page 1–4.

PREVENTIVE MAINTENANCE

Reasonable care in preventive maintenance will insure high reliability and long life for the switch. An annual preventive maintenance program is recommended.

ASCO Services, Inc. (ASI) is Automatic Switch Company's national service organization. ASI can be contacted at 201-966-2070 for information on preventive maintenance agreements.

Checklist for Yearly Inspection

⚠ DANGER: Hazardous voltage capable of causing shock, burns, or death is used in this switch. Deenergize both Normal and Emergency power sources before performing inspections!

- ☐ **Clean the switch enclosure.** Brush and vacuum away any excessive dust accumulation. Remove any moisture with a clean cloth.
- ☐ **Check the Switch Contacts**. Remove transfer switch barriers and check the condition of the contacts. Replace contacts when pitted or worn excessively. Reinstall barriers carefully.
- ☐ **Maintain transfer switch lubrication**. If the switch is subjected to severe dust or abnormal operating conditions, renew factory lubrication on all movements and linkages. Relubricate the solenoid operator if TS coil is replaced. Do not use oil; order ***lubrication kit 75-100***.
- ☐ Check all cable connections and retighten them.

REPLACEMENT PARTS

Replacement parts are available in kit form. When ordering parts provide the Serial No., Bill of Material No. (BOM), and Catalog No. from the transfer switch nameplate. Contact your local ASCO Sales Office or ASCO Services, Inc. (201-966-2070).

Replace plant exerciser battery (when furnished) every three years. Contact your local ASCO Services, Inc. office for battery replacement.

Replacement bulbs Do not substitute!

Load Connected To	Feature	Standard Applications	Oil-tight, Water-tight or Weather-proof
Normal	9A green	343978-3	397400-2
Emergency	9B red	343978-1	397400-1

DISCONNECTING THE CONTROL PANEL

The harness disconnect plug is furnished for repair purposes only and should not have to be unplugged. If the control panel must be isolated, follow these steps carefully.

Disconnecting the Plug

⚠ WARNING: Do not unplug the control panel until step 1 below is completed.

1. Perform steps 1, 2, and 3 on page 4–2.
2. Separate the quick disconnect plug by squeezing the latches. Do not pull on the harness wires.
3. Label, remove, and tape the signal wires connected to the engine start terminals on the transfer switch: TB14 and TB15, or TB14 and TB16.

Reconnecting the Plug

⚠ WARNING: Do not reconnect control panel until step 1 below is completed.

1. Observe the position of the transfer switch.
   a. If the transfer switch is in the *Normal* position, be sure that the standby engine starting control is still in the *off* position. The emergency source circuit breaker still should be open.
   b. If the transfer switch is in the *Emergency* position, normal source circuit breaker still should be open.
2. Reconnect the signal wires disconnected from the engine start terminals on the transfer switch. See **Section 1**, *Engine Starting Contacts*.
3. The harness plug and socket in the control panel are keyed. Carefully align the plug with the socket and press it straight in until both latches click.
4. Perform steps 9, 10, and 11 on page 4–4.

Katolight Service - Master Repair Manual - Page 3897

MANUAL LOAD TRANSFER

This procedure will manually transfer the load if the Control Panel is disconnected.

⚠ **WARNING:** Do not manually operate the transfer switch until both power sources are disconnected.

1. Open normal and emergency source circuit breakers.
2. Use the manual handle to manually operate the transfer switch to the opposite source. Remove the handle, if detachable. See **Section 1,** *Manual Operation*.
3. If the transfer switch is in the Emergency position manually start the engine generator and then close the emergency source circuit breaker.

TROUBLE-SHOOTING

Note any optional accessories that may be furnished on the switch and review their operation. Refer to any separate drawings and/or instructions that may be packed with the switch. Also refer to **Section 5, Optional Accessories.**

⚠ **DANGER: Hazardous voltage capable of causing shock, burns, or death is used in this switch. Do not touch the power or load terminals of the transfer switch!**

Table 3-1. Trouble-Shooting Checks.

PROBLEM	CHECK IN NUMERICAL SEQUENCE			
	1 OPERATION	2 GEN-SET	3 VOLTAGE	4 CIRCUIT
Gen-Set does not start when *TRANSFER TEST* switch is operated or when normal source fails.	Hold *TRANSFER TEST* switch 15 seconds or the outage must be long enough to allow for Feature 1 time delay plus engine cranking and starting time.	Starting control must be in automatic position. Batteries must be charged and connected. Check wiring to engine starting contacts.	Check position of DC power switch inside of control panel. The switch should be ON. See Figure 4–4 on page 4–3.	Ohmmeter should indicate an open circuit between control panel terminals CP16 and CP17 after Feature 1 time delay.
Transfer switch does not transfer the load to emergency source after the gen-set starts.	Wait for Feature 2B time delay to time out.	Generator output circuit breaker must be closed. Generator frequency must be at least 95% of nominal (57 Hz for a 60 Hz system.) *	Voltmeter should read at least 90% of nominal phase to phase voltage between transfer switch terminals EA and EC (or EL1 and EL2 for 2 pole switches). *	Check position of DC power switch inside of control panel. The switch should be ON. See Figure 4–4 on page 4–3.
Transfer switch does not transfer the load to normal source when normal returns or when the TRANSFER TEST switch is released.	Wait for Feature 3A time delay to time out.	-----	Voltmeter should read at least 90% of nominal phase to phase voltage between transfer switch terminals NB and NC, NC and NA, and NA and NB (or NL1 and NL2 for 2 pole switches).	Check position of DC power switch inside of control panel. The switch should be ON. See Figure 4–4 on page 4–3.
Gen-Set does not stop after load retransfer to the normal source.	Wait for Feature 2E time delay to time out.	Starting control must be in automatic position.	Check position of DC power switch inside of control panel. The switch should be ON. See Figure 4–4 on page 4–3.	Ohmmeter should indicate a closed circuit between control panel terminals CP16 and CP17 after Feature 2E time delay.

* These are factory settings. Refer to **Section 4.**

If the problem is isolated to circuits on the control panel or the transfer switch, call your local ASCO Authorized Representative, District Office, or Service Center. Furnish the Serial No. and Catalog No. from the transfer switch nameplate.

Katolight Service - Master Repair Manual - Page 3898

SECTION 4
ADJUSTMENTS

Time Delay Adjustment

Features 1C, 2B, 3A, and 2E time delays are factory set to the job specifications. Unless otherwise specified, the standard factory setting is used. If these time delays must be changed, carefully follow the procedure *How to Change a Setting* on the next page.

Use Table 4–1 below as a guide to the time delays and their corresponding slide DIP switches. The adjustments are incremental. Two DIP switches are used; each has eight actuators. See Figure 4–1, Figure 4–2, Figure 4–4, and Figure 4–5 on pages 4–2 and 4–3.

NOTE: While any one of the time delays is timing out, it can be bypassed or canceled by pressing the SW8 pushbutton switch located on the right side of the enclosed circuit board. See Figure 4–4 on page 4–3.

Table 4–1. Time Delay Settings

FEATURE	TIME DELAY DESCRIPTION	FACTORY SETTING	ADJUSTMENT RANGE	DIP SWITCH	SWITCH ACTUATORS	CHART NO.	PAGE NO.
1C	override momentary outages	1 second	0 to 6 seconds	SW1	5678	2	4–5
2B	transfer to emergency	0 minutes	0 to 5 minutes	SW2	1234	3	4–6
3A	retransfer to normal	30 minutes	0 to 30 minutes	SW1	1234	1	4–5
2E	gen–set cool down	5 minutes	0 to 60 minutes	SW2	5678	4	4–6

Sensor Adjustments

The voltage and frequency sensor pickup and dropout points are factory set to the job specifications. The standard factory setting is used unless otherwise specified. If a setting must be changed, carefully follow the procedures on the pages that follow.

Use Table 4–2 below as a guide to the voltage and frequency settings and their corresponding slide DIP switches. The adjustments are incremental. Three DIP switches are used; each has eight actuators. See Figure 4–4 and Figure 4–5 on page 4–3.

⚠ *CAUTION: Any indiscriminate change in these settings may affect the normal operation of the automatic transfer switch. This change could allow the load circuits to remain connected to a low voltage source.*

Table 4–2. Voltage and Frequency Settings.

LABEL	SENSOR DESCRIPTION	SETTING	% of nominal		DIP SWITCH	SWITCH ACTUATORS	CHART NO.	PAGE NO.
			FACTORY SETTING	ADJUSTMENT RANGE				
PUN	Normal Source Voltage	Pickup	90%	85 to 100%	SW3	5678	6	4–7
DON		Dropout	85%	75 to 98% of pick-up setting	SW4	12345	7	4–8
PUE	Emergency Source Voltage	Pickup	90%	85 to 100%	SW3	1234	5	4–7
---		Dropout	A fixed differential of approximately 15% below the pickup setting		---	---	---	---
EFREQ	Emergency Source Frequency	Pickup	95%	90 to 100%	SW5	1234	8	4–10
---		Dropout	A fixed differential of approximately 12% below the pickup setting		---	---	---	---

Note: Transformer adjust DIP switch SW6 (actuator 3 XFMR ADJ) lowers voltage sensing by 4.2% for special voltage applications. For example, a 460 volt system requires this transformer adjust turned on (up=ON, down=OFF).

Katolight Service - Master Repair Manual - Page 3899

How to Change a Setting

1. Prevent the transfer switch from operating and unnecessary load transfer by disconnecting one source as follows:

   a. If the transfer switch is in the *Normal* position, open the emergency source circuit breaker feeding this switch. Disconnect the engine start wire from the transfer switch (refer to the wiring diagram and Section 1, Installation).

   b. If the transfer switch is in the *Emergency* position, open the normal source circuit breaker feeding this switch. Turn the engine starting control to *test* or *run*.

   ⚠ DANGER: Hazardous voltage capable of causing shock, burns, or death is used in this switch. Do not touch the power or load terminals of the transfer switch!

2. Remove the outer cover from the control panel. Use your thumbs to release both latches. See Figure 4–1.

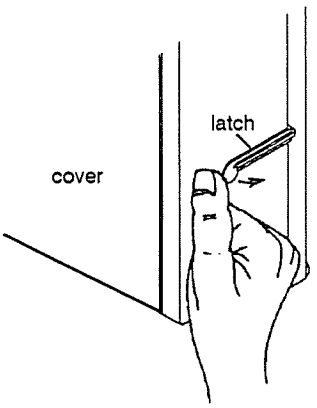

Figure 4–1. Control Panel cover latch.

3. Turn OFF the DC Power Switch located on the right side of the Control Panel. See Figure 4–2 and Figure 4–4.

   ⚠ WARNING: Do not make any setting changes while the control panel is energized.

4. Loosen two thumb screws (left side) and remove snap-on metal cover from circuit board. See Figure 4–2 and Figure 4–3.

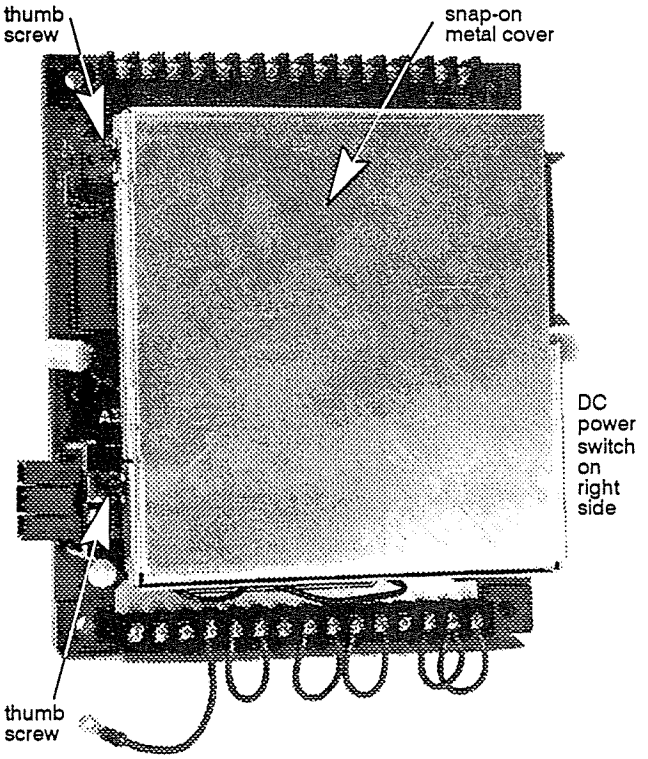

Figure 4–2. Circuit board metal cover.

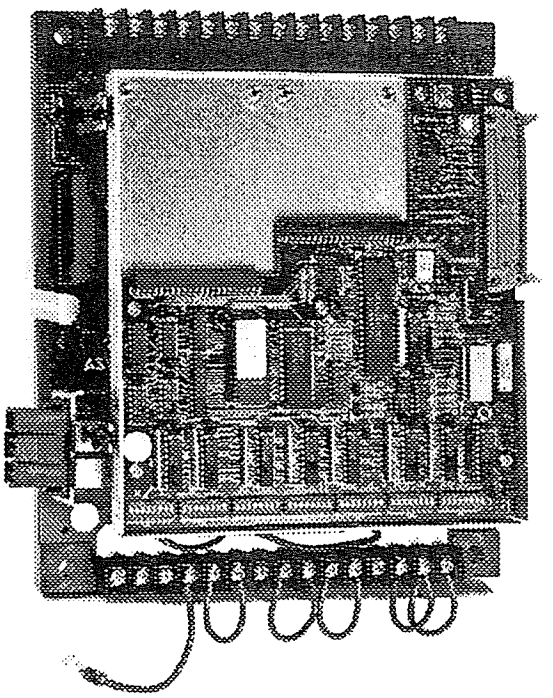

Figure 4–3. Metal cover removed.

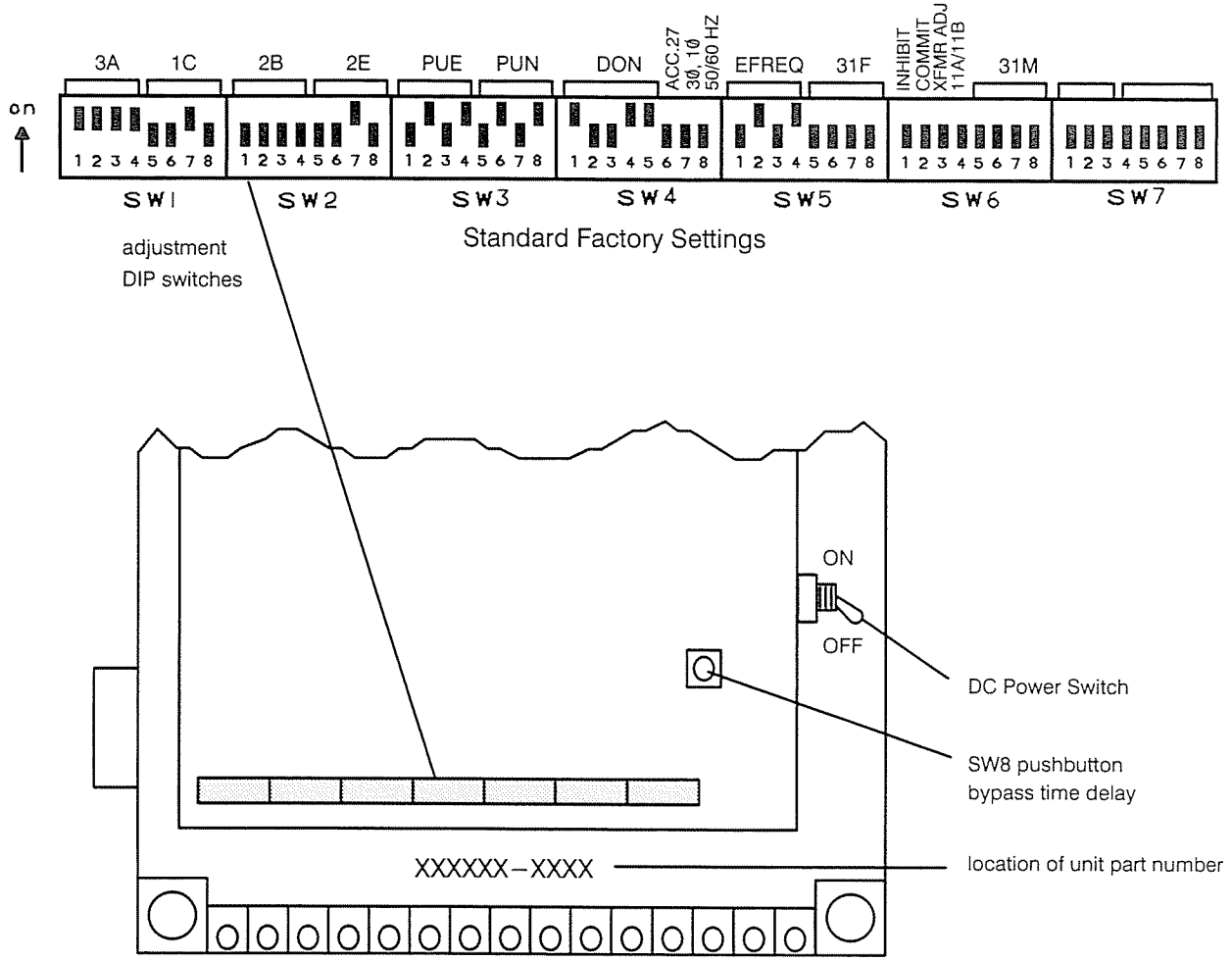

Figure 4–4. Location of DIP switches.

5. Locate the appropriate DIP switch for the setting you want to change (refer to Table 4–1 and Table 4–2 on page 4–1 and refer to Figure 4–4).

6. Find the specific chart for that setting, then choose the new setting (left side of chart).

7. Use a ball-point pen (or similar pointed tool) to slide the switch actuators up or down so they match the illustration next to the setting (up = on, down = off). Recheck the setting. See Figure 4–5.

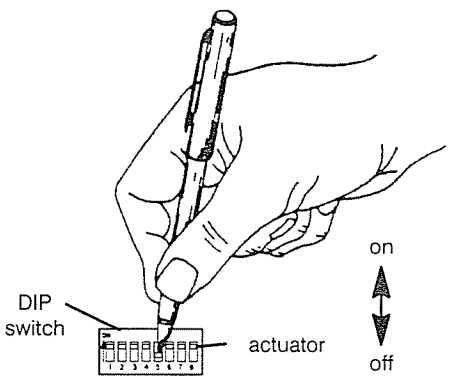

Figure 4–5. Setting DIP switch actuators.

8. Re-install the snap-on metal cover onto the circuit board, then retighten the two thumb screws.

9. Turn ON the DC Power Switch, right side of Control Panel.

   ⚠ *CAUTION: To prevent an inoperable ATS condition, be sure to turn ON the DC Power Switch.*

10. Re-install the outer cover onto the control panel. Align the cover and push it inward; be sure that the four pins fit into the base and that both latches engage the holes in the cover.

11. Restore the disconnected source as follows:

    a. If the transfer switch is in the *Normal* position, reconnect the engine start wire disconnected in step 1. Then close the emergency source circuit breaker feeding this switch.

    b. If the transfer switch is in the *Emergency* position, close the normal source circuit breaker feeding this switch. The load will be automatically retransferred to the normal source after Feature 3A time delay. For immediate retransfer, open and then reclose the emergency source circuit breaker feeding this switch. Turn the engine starting control to *automatic*.

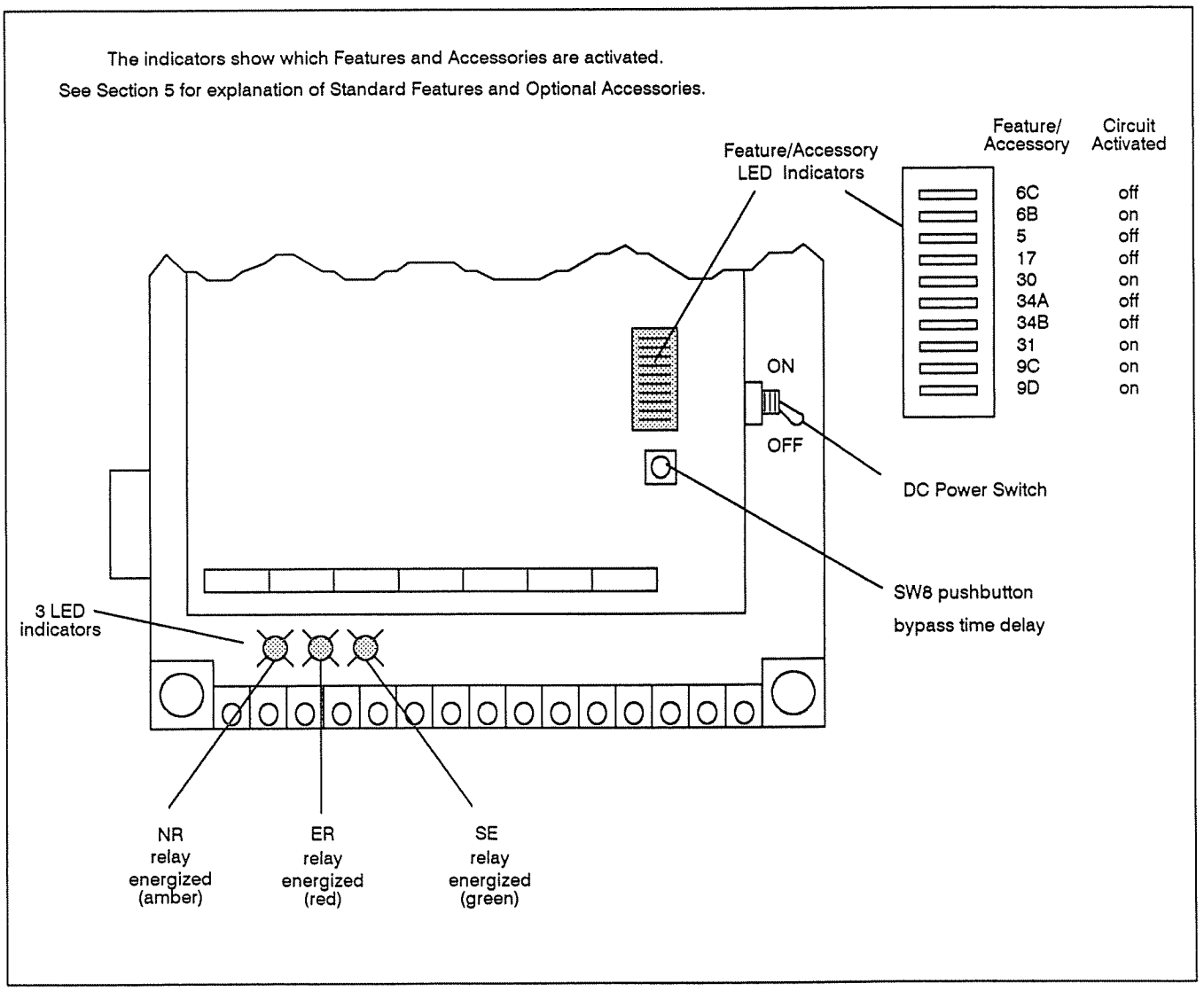

Figure 4–6. Location and function of LED indicators.

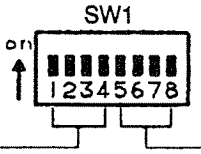

Chart 1

Retransfer to Normal Time Delay

Feature 3A Time Delay Setting	SW1 DIP Switch	Actuator Positions 1	2	3	4
0 seconds	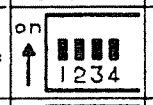	off	off	off	off
15 seconds		off	off	off	on
30 seconds		off	off	on	off
1 minute		off	off	on	on
2 minutes		off	on	off	off
3 minutes		off	on	off	on
4 minutes		off	on	on	off
5 minutes		off	on	on	on
8 minutes		on	off	off	off
10 minutes		on	off	off	on
12 minutes		on	off	on	off
15 minutes		on	off	on	on
18 minutes		on	on	off	off
20 minutes	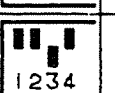	on	on	off	on
25 minutes	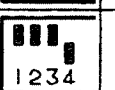	on	on	on	off
30 minutes	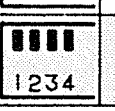	on	on	on	on

Chart 2

Override Momentary Outages Time Delay

Feature 1 Time Delay Setting	SW1 DIP Switch	Actuator Positions 5	6	7	8
0 seconds	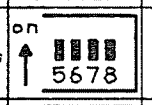	off	off	off	off
0.5 second		off	off	off	on
1.0 seconds		off	off	on	off
1.5 seconds		off	off	on	on
2.0 seconds		off	on	off	off
2.5 seconds		off	on	off	on
3.0 seconds		off	on	on	off
3.5 seconds	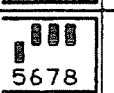	off	on	on	on
4.0 seconds		on	off	off	off
4.5 seconds	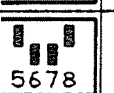	on	off	off	on
5.0 seconds	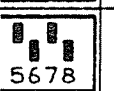	on	off	on	off
5.5 seconds	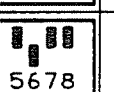	on	off	on	on
6.0 seconds	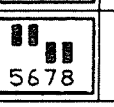	on	on	off	off

Do not use combinations other than above.

Shaded row indicates standard factory settings.

ADJUSTMENTS

(continued)

Chart 3

Transfer to Emergency Time Delay

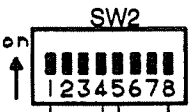

Feature 2B Time Delay Setting	SW2 DIP Switch	Actuator Positions 1	2	3	4
0 seconds	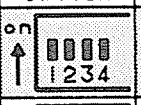	off	off	off	off
1 second	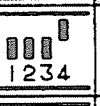	off	off	off	on
2 seconds	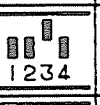	off	off	on	off
3 seconds	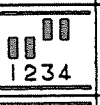	off	off	on	on
4 seconds	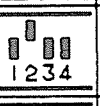	off	on	off	off
5 seconds	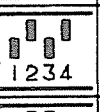	off	on	off	on
8 seconds	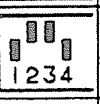	off	on	on	off
10 seconds	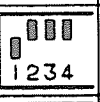	off	on	on	on
20 seconds	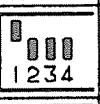	on	off	off	off
30 seconds	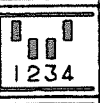	on	off	off	on
45 seconds	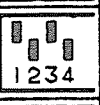	on	off	on	off
1 minute		on	off	on	on
2 minutes		on	on	off	off
3 minutes	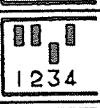	on	on	off	on
4 minutes		on	on	on	off
5 minutes		on	on	on	on

Chart 4

Gen-Set Cool Down Time Delay

Feature 2E Time Delay Setting	SW2 DIP Switch	Actuator Positions 5	6	7	8
0 minutes		off	off	off	off
2 minutes	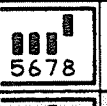	off	off	off	on
5 minutes	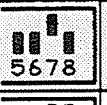	off	off	on	off
8 minutes		off	off	on	on
10 minutes	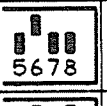	off	on	off	off
12 minutes		off	on	off	on
15 minutes	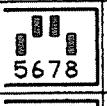	off	on	on	off
20 minutes		off	on	on	on
25 minutes		on	off	off	off
30 minutes		on	off	off	on
35 minutes		on	off	on	off
40 minute		on	off	on	on
45 minutes		on	on	off	off
50 minutes		on	on	off	on
55 minutes		on	on	on	off
60 minutes		on	on	on	on

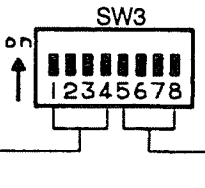

Chart 5

Emergency Source Voltage Pickup

voltage pickup setting	SW3 DIP Switch	Actuator Positions 1	2	3	4
85 percent	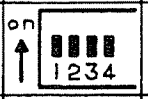	off	off	off	off
86 percent		off	off	off	on
87 percent		off	off	on	off
88 percent		off	off	on	on
89 percent		off	on	off	off
90 percent		off	on	off	on
91 percent		off	on	on	off
92 percent		off	on	on	on
93 percent		on	off	off	off
94 percent	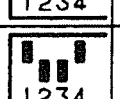	on	off	off	on
95 percent	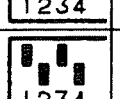	on	off	on	off
96 percent	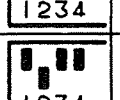	on	off	on	on
97 percent		on	on	off	off
98 percent		on	on	off	on
99 percent		on	on	on	off
100 percent		on	on	on	on

Chart 6

Normal Source Voltage Pickup

voltage pickup setting	SW3 DIP Switch	Actuator Positions 5	6	7	8
85 percent	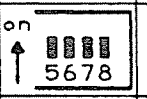	off	off	off	off
86 percent	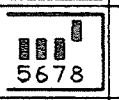	off	off	off	on
87 percent		off	off	on	off
88 percent		off	off	on	on
89 percent		off	on	off	off
90 percent	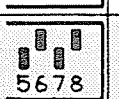	off	on	off	on
91 percent	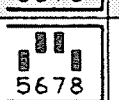	off	on	on	off
92 percent	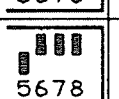	off	on	on	on
93 percent	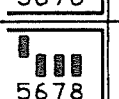	on	off	off	off
94 percent	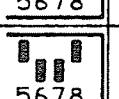	on	off	off	on
95 percent	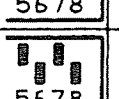	on	off	on	off
96 percent	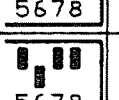	on	off	on	on
97 percent	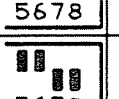	on	on	off	off
98 percent	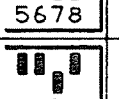	on	on	off	on
99 percent		on	on	on	off
100 percent		on	on	on	on

Chart 7
(see page 4–9)

SW4

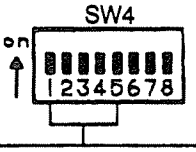

Normal Source Voltage Dropout (percent of pickup setting)

voltage dropout setting	SW4 DIP Switch	Actuator Positions 1	2	3	4	5
A 75%		off	off	off	off	off
B 76%		off	off	off	off	on
C 77%	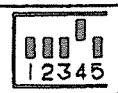	off	off	off	on	off
D 78%	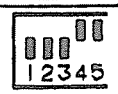	off	off	off	on	on
E 79%	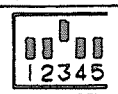	off	off	on	off	off
F 80%	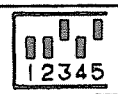	off	off	on	off	on
G 81%		off	off	on	on	off
H 82%	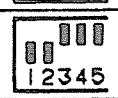	off	off	on	on	on
I 83%		off	on	off	off	off
J 84%		off	on	off	off	on
K 85%		off	on	off	on	off
L 86%	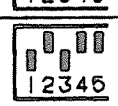	off	on	off	on	on
M 87%		off	on	on	off	off
N 88%		off	on	on	off	on
O 89%	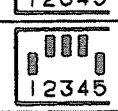	off	on	on	on	off
P 90%		off	on	on	on	on

Normal Source Voltage Dropout (continued) (percent of pickup setting)

voltage dropout setting	SW4 DIP Switch	Actuator Positions 1	2	3	4	5
Q 91%	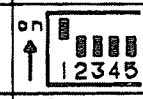	on	off	off	off	off
R 92%		on	off	off	off	on
S 93%		on	off	off	on	off
T 94%	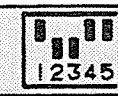	on	off	off	on	on
U 95%	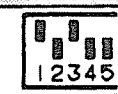	on	off	on	off	off
V 96%		on	off	on	off	on
W 97%		on	off	on	on	off
X 98%		on	off	on	on	on
Do not use combinations other than above.						

Phase Selection

Normal Source Sensing	SW4 DIP Switch	Switch Actuator 7
Three Phase	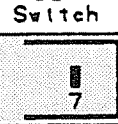	off
Single Phase		on

Frequency Selection

Source Frequency	SW4 DIP Switch	Switch Actuator 8
60 Hz	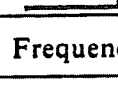	off
50 Hz		on

How To Determine the Normal Source Voltage Dropout Setting (% Pickup)
(shown in Chart 7 on page 4–8, based on a percentage of Nominal)

1. Determine the Normal Source Voltage Pickup Setting as set on DIP Switch SW3 (actuators 5–8) in Chart 6 on page 4–7.
2. Find this number at the top of Table 4–3.
3. Find the desired Normal Source Voltage Dropout Setting in the column below the number found in step 2.
4. Find the DIP switch setting on the left side in the same row as the number found in step 3.
5. Set DIP Switch SW4 (actuators 1–5) in Chart 7 to the letter found in step 4.

Table 4–3. Normal Source Voltage Pickup to Dropout Conversion

Set DIP Switch SW4 (1–5) to this letter	**Steps 1 & 2** NORMAL VOLTAGE PICKUP (% Nominal) (as set on Dip Switch SW3 (5–8) in Chart 6 on page 4–7)															
	85	86	87	88	89	90	91	92	93	94	95	96	97	98	99	100
Step 4	**Step 3** Normal Voltage Dropout (% Nominal)															
A	64	65	65	66	67	68	68	69	70	71	71	72	73	74	74	75
B	65	65	66	67	68	68	69	70	71	71	72	73	74	74	75	76
C	65	66	67	68	69	69	70	71	72	72	73	74	75	75	76	77
D	66	67	68	69	69	70	71	72	73	73	74	75	76	76	77	78
E	67	68	69	70	70	71	72	73	73	74	75	76	77	77	78	79
F	68	69	70	70	71	72	73	74	74	75	76	77	78	78	79	80
G	69	70	70	71	72	73	74	75	75	76	77	78	79	79	80	81
H	70	71	71	72	73	74	75	75	76	77	78	79	80	80	81	82
I	71	71	72	73	74	75	76	76	77	78	79	80	81	81	82	83
J	71	72	73	74	75	76	76	77	78	79	80	81	81	82	83	84
K	72	73	74	75	76	77	77	78	79	80	81	82	82	83	84	85
L	73	74	75	76	77	77	78	79	80	81	82	83	83	84	85	86
M	74	75	76	77	77	78	79	80	81	81	83	84	84	85	86	87
N	75	76	77	77	78	79	80	81	82	83	84	84	85	86	87	88
O	76	77	77	78	79	80	81	82	83	84	85	85	86	87	88	89
P	77	77	78	79	80	81	82	83	84	85	86	86	87	88	89	90
Q	77	78	79	80	81	82	83	84	85	86	87	87	88	89	90	91
R	78	79	80	81	82	83	84	85	86	86	87	88	89	90	91	92
S	79	80	81	82	83	84	85	86	86	87	88	89	90	91	92	93
T	80	81	82	83	84	85	86	86	87	88	89	90	91	92	93	94
U	81	82	83	84	85	86	86	87	88	89	90	91	92	93	94	95
V	82	83	84	84	85	86	87	88	89	90	91	92	93	94	95	96
W	82	83	84	85	86	87	88	89	90	91	92	93	94	95	96	97
X	83	84	85	86	87	88	89	90	91	92	93	94	95	96	97	98

Highlighted value is standard factory setting.

Chart 8

Emergency Source Frequency Pickup

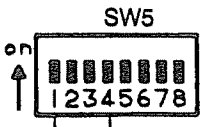

Frequency pickup setting	SW5 DIP Switch	Actuator Positions 1	2	3	4
90 percent	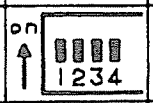	off	off	off	off
91 percent		off	off	off	on
92 percent		off	off	on	off
93 percent	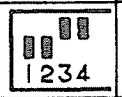	off	off	on	on
94 percent	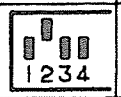	off	on	off	off
95 percent	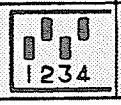	off	on	off	on

Emergency Source Frequency Pickup (continued)

Frequency pickup setting	SW5 DIP Switch	Actuator Positions 1	2	3	4
96 percent	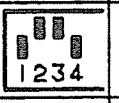	off	on	on	off
97 percent		off	on	on	on
98 percent		on	off	off	off
99 percent		on	off	off	on
100 percent		on	off	on	off
Do not use combinations other than above.					

Commit on Transfer Selection
(after engine start contact closes)

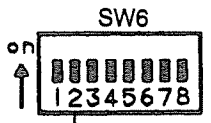

Commit On Transfer Setting	SW6 DIP Switch	Switch Actuator 2
not used	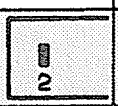	off
used	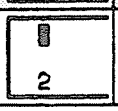	on

Upon Normal Source failure (or Transfer Test) the Automatic Transfer Switch is committed to transfer to Emergency, even if the Normal Source is restored before transfer. This *Commit on Transfer* can be overridden by placing DIP Switch SW6 actuator 2 to *off* (down).

SECTION 5
STANDARD FEATURES & OPTIONAL ACCESSORIES

REMOTE CONTROL

Feature 17. Terminal provisions for remote contact which opens to signal automatic transfer switch to transfer to the emergency source.

Connect a normally closed dry contact (rated for low energy circuits) to control panel terminals **CP25** and **CP 26**. Remove existing jumper. See Figure 5–1.

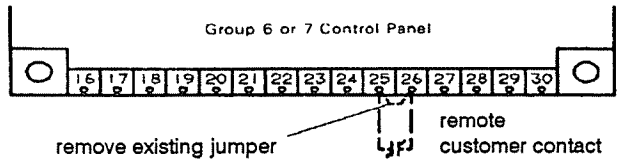

Figure 5–1. Feature 17

Feature 34A. Terminal provisions for a remote customer contact to inhibit transfer to the Normal source. Customer contact must close to allow transfer to Normal.

Connect a normally closed dry contact (rated for low energy circuits) to control panel terminals **CP28** and **CP29**. Remove existing jumper. See Figure 5–2.

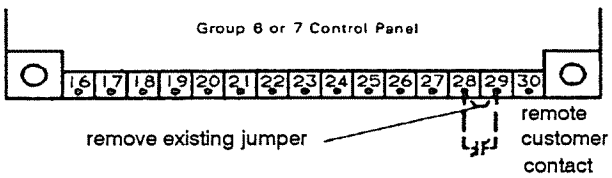

Figure 5–2. Feature 34A.

Feature 34B. Terminal provisions for a remote customer contact to inhibit transfer to the Emergency source. Customer contact must close to allow transfer to Emergency.

Connect a normally closed dry contact (rated for low energy circuits) to control panel terminals **CP29** and **CP30**. Remove existing jumper. See Figure 5–3.

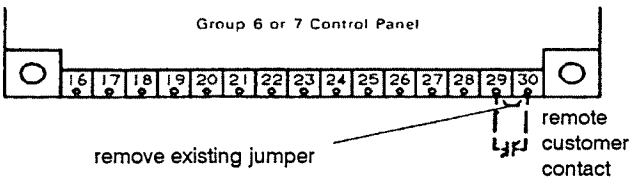

Figure 5–3. Feature 34B.

OPTIONAL MANUAL CONTROL

These manual controls, if furnished, are connected and installed on the enclosure door, or is shipped loose for open–type automatic transfer switches.

☐ **Acc. 6B.** Momentary close override switch (normally open) to manually bypass time delay on retransfer to the normal source. See Figure 5–4.

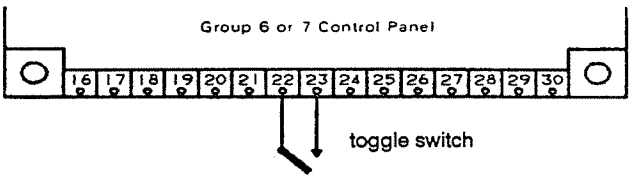

Figure 5–4. Optional Accessory 6B.

☐ **Acc. 6C.** Momentary close reset switch (normally open) for manual retransfer of the automatic transfer switch to the normal source only after time delay Feature 3A expires with automatic retransfer in event of emergency source failure. See Figure 5–5.

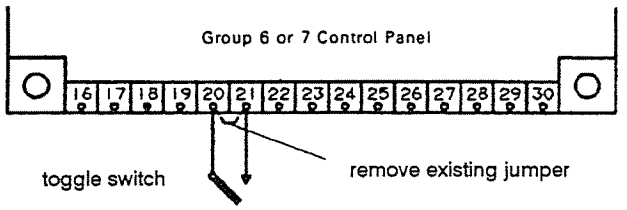

Figure 5–5. Optional Accessory 6C.

Katolight Service - Master Repair Manual - Page 3909

OPTIONAL PLANT EXERCISER

☐ Acc. 11C This timer, if furnished, is an additional plug–in circuit board in the control panel. The timer is used for periodic exercising of the emergency engine-generator plant. The timer can be set to exercise the gen–set for 0 to 7 days a week. The exercise time period may be from 1 minute to 24 hours (in 1 minute increments). The exerciser can be set to exercise with or without load transfer. The engine–generator should be exercised under load once a week for a minimum time period of 20 minutes, or follow the recommendations of the engine-generator set manufacturer. A built-in lithium battery allows the exerciser to *keep time* for up to 1 year without external power. See Figure 5–6 and Figure 5–7.

Check Battery ON/OFF Switch

Turn on the plant exerciser backup battery by sliding single DIP switch S5 to ON. See page 4–2 and Figure 5–7.

How to Set the Timer

1. **Set Present Time** Hold down the *TIME/DAY* button and press the *SET* button. Hold down the *SET* button for fast set; press and release the *SET* button for slow set (1 minute increments). A dot in the top left corner means PM. Release the *TIME/DAY* button when the correct time is displayed.
2. **Set Present Day** Press the *TIME/DAY* button once, release, then press again and hold it. Press and release the *SET* button to change the day (1 is Sunday). Release the *TIME/DAY* button when the correct day is displayed.
3. **Set Start Time** Decide what time you want to start the exercise period. Hold down the *ON TIME* button and press the *SET* button. Hold down the *SET* button for fast set; press and release the *SET* button for slow set (1 minute increments). Release the *ON TIME* button when the correct start time is displayed.
4. **Set Stop Time** Decide what time you want to stop the exercise period. Hold down the *OFF TIME* button and press the *SET* button. Hold down the *SET* button for fast set; press and release the *SET* button for slow set (1 minute increments). Release the *OFF TIME* button when the correct stop time is displayed.

(continued on next page)

The standard factory setting is for exercise without load.

Exercise Without Load (Acc. 11 A)

Timer exercises the engine generator without load for the set time period. The automatic transfer switch is not affected. This is the standard factory setting.

Exercise With Load (Acc. 11B)

Timer simulates a normal source failure. The automatic transfer switch transfers the electrical load to the emergency generator during the exercise period.

Exerciser Selection

Exerciser Mode Setting	SW6 DIP Switch	Switch Actuator 4
Exercise without load (factory setting)	4	off
Exercise with load	4	on

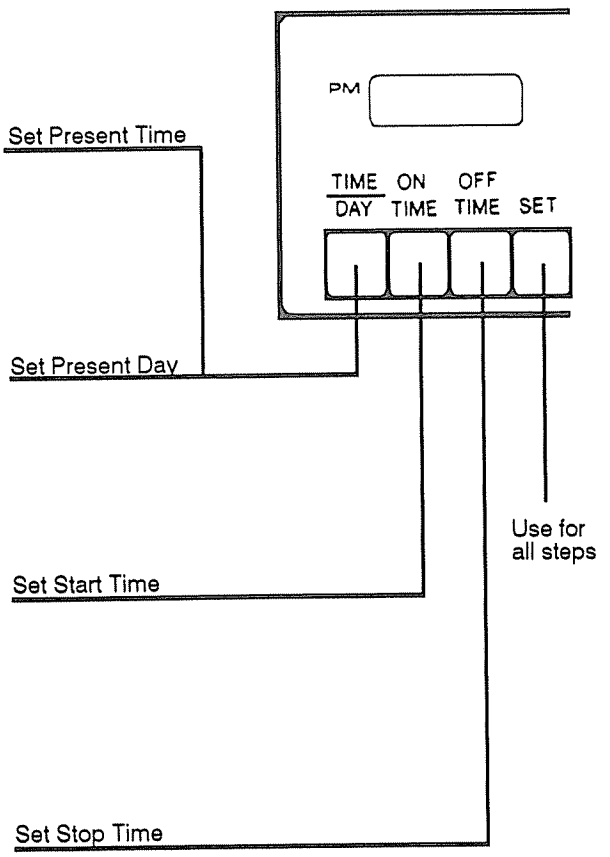

Figure 5–6. Setting and reading the timer.

5. Set Run Day(s) Decide what day(s) you want to exercise the engine-generator set. Read the following directions completely before setting run days.

   Hold down the *SET* button and press both the *TIME/DAY* and *ON TIME* buttons simultaneously; a 0 is displayed. (If no run days are desired, release all buttons.) Next the display will change to 1 (Sunday). If that day is desired, release the *SET* button and **wait for a dash to appear** before the 1 (-1). Once the dash appears that day is set. To set more run days in addition to this one, press the *SET* button while the dash is there (**you only have 1.5 seconds to do so**) and the next run day is displayed. If you do not want that day do not release the *SET* button. That day will be skipped. When all run days are entered release all the buttons; "**S:E**" is displayed which means the setting process is completed.

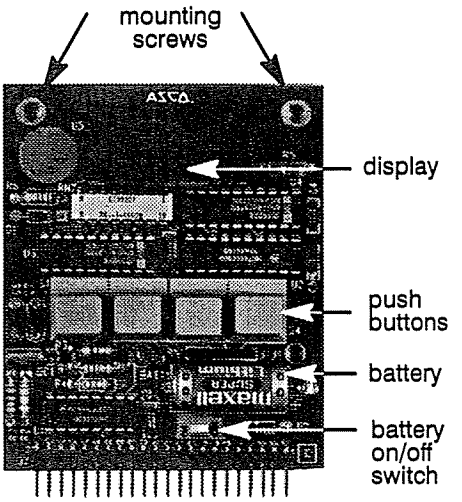

Figure 5–7. Optional Accessory 11C.

How To Read The Timer

Function	Action
Display Time*	Press the *TIME/DAY* button once. A dot in the top left corner means PM.
Display Day*	Press the *TIME/DAY* button twice. The day of the week is displayed as 1-7 (1 is Sunday).
Display Engine Start Time*	Press the *ON TIME* button.
Display Engine Stop Time*	Press the *OFF TIME* button.
Display Run Day(s)	Press the *TIME/DAY* and *ON/TIME* buttons simultaneously, then release them. The run days are displayed in sequence.

* The display stays on for 5 seconds or as long as the button is pressed.

Trouble-Shooting

If the NR relay energized LED indicator (Figure 4–6) does not turn off during the set exercise period, the engine generator plant will not be signaled to run. If the indicator remains on beyond the set period, the plant will continue running. In either case, Acc. 11C timer is malfunctioning.

The built-in battery may need to be replaced after approximately 3 years of shelf life (when ON/OFF switch has been left on). Contact your local ASCO Service Center for battery replacement.

Note

In the exercise mode total engine running time consists of timer setting plus retransfer time setting (Feature 3A) plus cool-down time setting (Feature 2E). See page 4-1.

Timer Override

To override the timer so that the engine is not exercised, change the timer setting to day "0" (step 5 on this page).

OPTIONAL ACCESSORIES
(continued)

STANDARD AND OPTIONAL ACCESSORY 14 INDICATORS

One set of auxiliary contacts (Feature 14A/14B) is provided standard on all automatic transfer switches.

☐ **Acc. 14A/14B** If furnished, are mounted on the transfer switch. Connect external circuits to the terminals indicated in Table 5-1. The location of the auxiliary contacts varies according to the amp size of the transfer switch. See Figure 5–8 through Figure 5–12.

Feature/Acc. 14A Auxiliary contact closed when automatic transfer switch is connected to the normal source.

Feature/Acc. 14B Auxiliary contact closed when automatic transfer switch is connected to the emergency source.

Auxiliary Contact Rating: 10 amps 480 VAC

⚠ **WARNING:** Do not make any connections before de-energizing both the normal and emergency sources: Open both circuit breakers.

Table 5-1. Auxiliary Contact Terminals

Auxiliary Contact Sets	Closed On Normal 14A	Closed On Emergency 14B
standard	TS 12-13	TS10-11
1st optional	TS 31-32	TS29-30
2nd optional	TS 35-36	TS33-34
3rd optional	TS 39-40	TS37-38

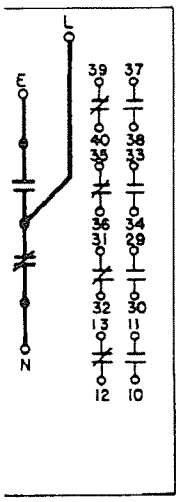

Figure 5–8.
30–150 amps

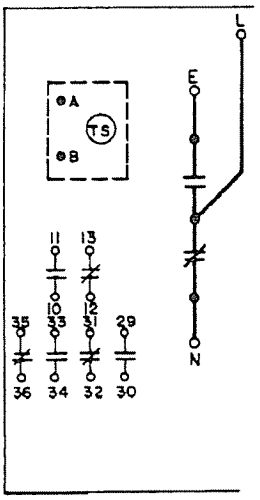

Figure 5–9.
260–400 amps

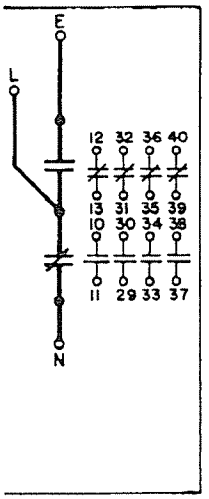

Figure 5–10.
600–800 amps

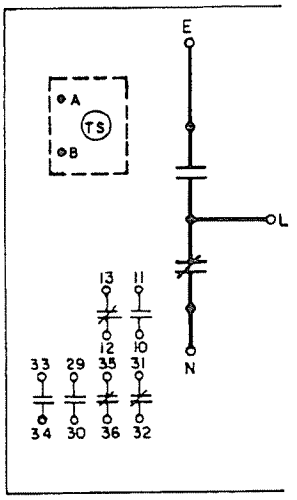

Figure 5–11.
1000–1200 amps

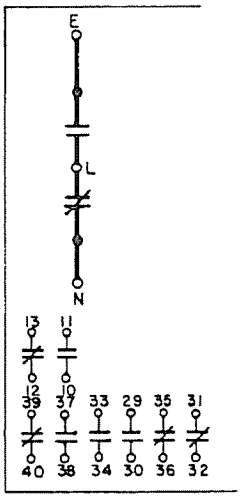

Figure 5–12.
1600–4000 amps

OPTIONAL SOURCE AVAILABLE SIGNAL LIGHTS

☐ **Acc. 9C and 9D.** These signal lights, if furnished, are connected and installed on the enclosure door, or are shipped loose for open–type automatic transfer switches. See Figure 5–13.

Acc. 9C Signal light (green) indicates that the Normal source is available.

Acc. 9D Signal light (red) indicates that the Emergency source is available.

Replacement bulbs for standard application are:
ASCO number 343978–3 green LED (Acc. 9C)
ASCO number 343978–1 red LED (Acc. 9D)
For oil–tight, watertight, or weatherproof applications:
ASCO number 397400–2 green LED (Acc. 9C)
ASCO number 397400–1 red LED (Acc. 9D)
Do not substitute!

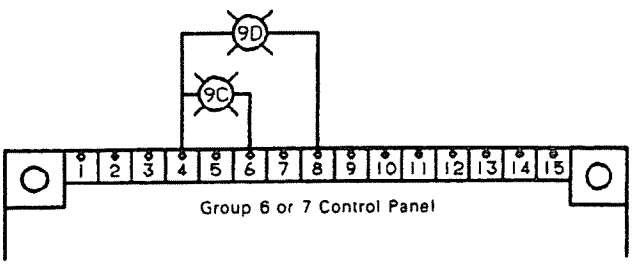

Figure 5–13. Optional Accessories 9C and 9D.

OPTIONAL ACCESSORY 27 MOTOR LOAD TRANSFER

☐ **Acc. 27**, if activated, is an inphase monitor control for transfer and retransfer of motor loads when both sources are available during open transition transfer, so that inrush currents do not exceed normal starting currents. This avoids nuisance tripping of circuit breakers and possible mechanical damage to motor couplings.

Activating this monitor will cause an inphase transfer between two live sources whenever the ATS transfers.

Inphase transfer is initiated when:

a. The **Transfer Test** switch is activated.

   or

b. The source the ATS is connected to is below its dropout setpoint, but its voltage is greater than 70% of nominal

   or

c. The ATS is retransferring to the Normal Source following expiration of the Feature 3A retransfer time delay.

Accessory 27 is built into the control panel and is activated at the factory when specified by the customer (DIP switch S4, actuator 6: up=ON, down=OFF).

Accessory 27 Setting	S4 DIP Switch	Switch Actuator 6
not used	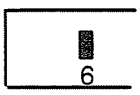	off
activated	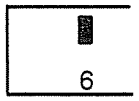	on

Enable Time Delay

An enable time delay (1.5 sec) is normally activated to allow generator stabilization before transfer. This delay can be turned off if both sources are utilities. When the enable time is de-activated inphase transfer will take place as soon as inphase conditions are met.

Enable Time Delay	S6 DIP Switch	Switch Actuator 1
activated	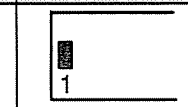	off
not used	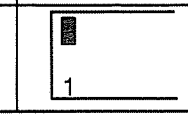	on

Transfer Switch on Normal
ER relay dropped out

When the **Transfer Test** switch is used, the SE relay drops out. After 1.5 second enable delay (allows the emergency source to stabilize) the inphase monitor senses both sources for frequency difference and phase relationship. Transfer will take place only if the frequency difference between the two sources is small enough that transfer can take place before exceeding the inphase window.

Once these conditions are met, the control panel calculates at what point transfer should be initiated (by picking up the ER relay) to allow inphase transfer.

Transfer Switch on Emergency
SE relay dropped out

On retransfer to Normal the ER relay is dropped out and transfer is initiated by picking up the SE relay in a manner similar to that outlined above.

OPTIONAL SELECTIVE LOAD DISCONNECT CONTROL

These circuits, if furnished, are supplied on an add–on panel and connected to the control panel. Two sets of double–throw contacts are provided. Connect external circuits to the terminals indicated in Figure 5–14.

☐ **Acc. 31F** Contacts operate 1 second to 5 minutes (adjustable) before transfer of the Automatic Transfer Switch and reset 1 second after transfer.

☐ **Acc. 31M** Contacts operate 1 second to 5 minutes (adjustable) before transfer of the Automatic Transfer Switch and reset 1 second to 5 minutes after transfer.

Note: CR1 is normally energized.

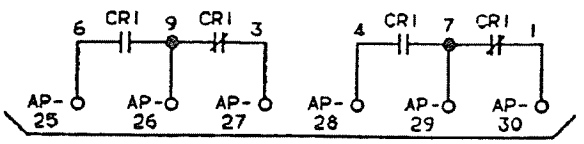

Selective Load Disconnect Control Contacts
3 amps @ 480 V ac
6 amps @ 240 V ac general use
10 amps @ 32 V dc resistive
1/3 hp @ 120 V ac
1/2 hp @ 240 V ac

Figure 5–14. Optional Accessory 31F & 31M terminal connections on add–on panel.

How to Change a Time Delay Setting

To change the time delay settings follow the procedure in **Section 4, Adjustments.** The time delays are shown in the chart at the right. DIP switch SW5 (actuators 5,6,7,8) sets the time delay before transfer. DIP switch SW6 (actuators 5,6,7,8) sets the time delay after transfer.

NOTE: Whenever Acc. 31F or 31M is used, actuators 5, 6, 7, 8 of DIP SW5 and DIP SW6 must be set greater than zero.

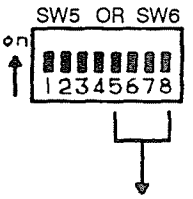

Load Shed Time Delay	DIP Switch	Actuator Positions 5	6	7	8
Acc. 31 inactive setting	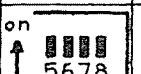	off	off	off	off
1 second		off	off	off	on
2 seconds		off	off	on	off
3 seconds	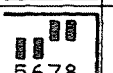	off	off	on	on
4 seconds	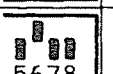	off	on	off	off
5 seconds	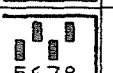	off	on	off	on
8 seconds	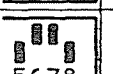	off	on	on	off
10 seconds	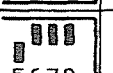	off	on	on	on
20 seconds		on	off	off	off
30 seconds		on	off	off	on
45 seconds		on	off	on	off
1 minute		on	off	on	on
2 minutes		on	on	off	off
3 minutes		on	on	off	on
4 minutes	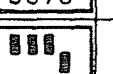	on	on	on	off
5 minutes		on	on	on	on

SECTION 6
DIAGRAMS

The standard diagrams included in this section apply to standard ASCO 940 Automatic Transfer Switches with or without the Optional Accessories listed on the Wiring Diagrams. Refer to any separate diagrams packed with the switch.

Wiring Diagrams

Three Phase	JS 465935
Single Phase	JS 465934

Outline Diagrams (Open–Type Switches)

30 – 400 ampere	JS 401950
600 – 4000 ampere without Accessory 28	JS 401951
600 – 4000 ampere with Accessory 28	JS 401952

Enclosure Outline Diagram

all sizes	JS 401953

PHYSICAL WIRING

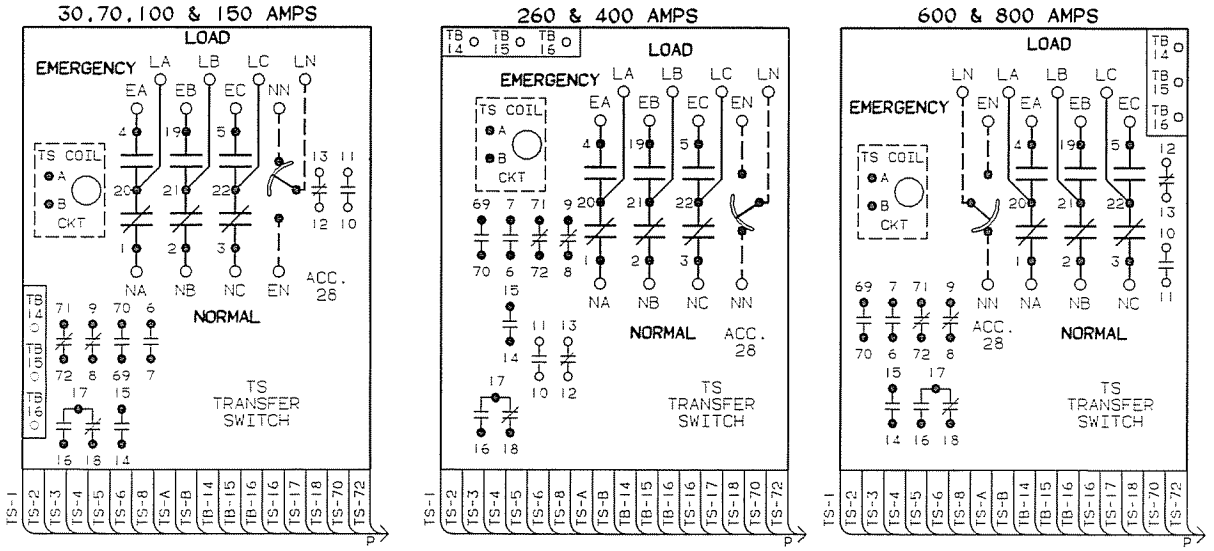

STANDARD FEATURES

VOLTAGE AND FREQUENCY SENSING

A. CLOSE DIFFERENTIAL VOLTAGE SENSING ON ALL PHASES OF NORMAL SOURCE. PICKUP VOLTAGE IS ADJUSTABLE FROM 85% TO 100% OF NOMINAL AND THE DROPOUT IS ADJUSTABLE FROM 75% TO 98% OF THE PICKUP VALUE. FACTORY SET TO PICKUP AT 90% AND DROPOUT AT 85% OF NOMINAL UNLESS OTHERWISE SPECIFIED. **STANDARD FEATURE 4B.**

B. SINGLE PHASE VOLTAGE SENSING OF EMERGENCY SOURCE. PICKUP ADJUSTABLE FROM 85% TO 100% OF NOMINAL. FACTORY SET TO PICKUP AT 90% UNLESS OTHERWISE SPECIFIED.

C. FREQUENCY SENSING OF EMERGENCY SOURCE. PICKUP ADJUSTABLE FROM 90% TO 100% OF NOMINAL. FACTORY SET TO PICKUP AT 95% UNLESS OTHERWISE SPECIFIED.

TIME DELAYS

D. TIME DELAY TO OVERRIDE MOMENTARY NORMAL SOURCE OUTAGES TO DELAY ALL TRANSFER SWITCH AND ENGINE STARTING SIGNALS. ADJUSTABLE FROM 0 TO 6 SECONDS. FACTORY SET AT 1 SECOND UNLESS OTHERWISE SPECIFIED. **STANDARD FEATURE 1.**

E. RETRANSFER TO NORMAL TIME DELAY. TIME DELAY IS AUTOMATICALLY BYPASSED IF EMERGENCY SOURCE FAILS AND NORMAL SOURCE IS AVAILABLE. ADJUSTABLE FROM 0 TO 30 MINUTES. FACTORY SET AT 30 MINUTES UNLESS OTHERWISE SPECIFIED. **STANDARD FEATURE 3A.**

F. UNLOADED RUNNING TIME DELAY FOR EMERGENCY ENGINE GENERATOR COOLDOWN. ADJUSTABLE FROM 0 TO 60 MINUTES. FACTORY SET AT 5 MINUTES UNLESS OTHERWISE SPECIFIED. **STANDARD FEATURE 2E.**

G. TRANSFER TO EMERGENCY TIME DELAY. ADJUSTABLE FROM 0 TO 5 MINUTES. FACTORY SET AT 0 MINUTES UNLESS OTHERWISE SPECIFIED. **STANDARD FEATURE 2B.**

MANUAL CONTROLS

H. MOMENTARY TYPE TEST SWITCH (TGL) TO SIMULATE NORMAL SOURCE FAILURE. INSTALLED ON DOOR OF ENCLOSED TYPE. SHIPPED LOOSE FOR OPEN TYPE. **STANDARD FEATURE 5.**

REMOTE AUTOMATIC TRANSFER SWITCH CIRCUITS

J. TERMINAL PROVISIONS FOR REMOTE CUSTOMER CONTACT WHICH OPENS TO SIGNAL A.T.S. TO TRANSFER TO EMERGENCY. REFER TO OPERATOR'S MANUAL TO ACTIVATE. **STANDARD FEATURE 17.** (SEE NOTE 9)

ENGINE CONTROL CONTACTS

K. ONE SET OF CONTACTS CONSISTING OF: ONE CONTACT THAT CLOSES WHEN NORMAL SOURCE FAILS AND ONE CONTACT THAT OPENS WHEN NORMAL SOURCE FAILS. CONTACTS ARE GOLD FLASHED FOR LOW VOLTAGE ENGINE START SIGNALS OR OTHER CUSTOMER USE. RATED 10 AMPS, 32 VOLTS DC. **STANDARD FEATURE 7/8.**

INDICATORS

L. ONE SET OF AUXILIARY CONTACTS CONSISTING OF: ONE CONTACT CLOSED WHEN A.T.S. IS CONNECTED TO NORMAL AND ONE CONTACT CLOSED WHEN A.T.S. IS CONNECTED TO EMERGENCY. (ADDITIONAL SETS OF AUXILIARY CONTACTS ARE AVAILABLE AS OPTIONS - SEE BELOW). **STANDARD FEATURE 14A/14B.**

M. ONE SET OF SIGNAL LIGHTS CONSISTING OF: ONE SIGNAL LIGHT (GREEN) TO INDICATE WHEN A.T.S. IS CONNECTED TO NORMAL SOURCE AND ONE SIGNAL LIGHT (RED) TO INDICATE WHEN A.T.S. IS CONNECTED TO EMERGENCY SOURCE. LIGHTS ARE INSTALLED ON DOOR OF ENCLOSED TYPE. SHIPPED LOOSE FOR OPEN TYPE. **STANDARD FEATURE 9A/9B.**

TRANSFER INHIBIT

N. TERMINAL PROVISIONS FOR REMOTE CUSTOMER CONTACT(S) TO INHIBIT A.T.S. TRANSFER TO NORMAL AND/OR EMERGENCY SOURCE. CUSTOMER CONTACT OPENS TO INHIBIT TRANSFER. REFER TO OPERATOR'S MANUAL TO ACTIVATE. **STANDARD FEATURE 34A/34B.** (SEE NOTE 9)

COMMIT/NO COMMIT ON TRANSFER

P. UPON FEATURE 1 TIMING OUT (DUE TO A TEST OR NORMAL SOURCE FAILURE) THE A.T.S. IS COMMITTED TO TRANSFER TO EMERGENCY, EVEN IF THE NORMAL SOURCE IS RESTORED BEFORE THE TRANSFER TAKES PLACE. THIS "COMMIT ON TRANSFER" FEATURE CAN BE OVERRIDDEN BY OPERATING A SWITCH IN THE CONTROL PANEL. REFER TO OPERATOR'S MANUAL.

FREQUENCY SELECTION

R. OPERATING FREQUENCIES OF 50HZ. OR 60HZ. MAY BE SELECTED BY A SWITCH IN THE CONTROL PANEL. FACTORY SET AT SPECIFIED FREQUENCY. REFER TO OPERATORS'S MANUAL.

OPTIONAL ACCESSORIES

MANUAL CONTROLS

☐ **6B:** MOMENTARY OVERRIDE SWITCH TO MANUALLY BYPASS TIME DELAY ON RETRANSFER TO NORMAL. INSTALLED ON DOOR OF ENCLOSED TYPE. SHIPPED LOOSE FOR OPEN TYPE.

☐ **6C:** MOMENTARY RESET SWITCH FOR MANUAL RETRANSFER OF THE A.T.S TO THE NORMAL SOURCE ONLY AFTER TIME DELAY FEATURE 3A EXPIRES WITH INSTANTANEOUS AUTOMATIC RETRANSFER IN THE EVENT OF EMERGENCY SOURCE FAILURE. INSTALLED ON DOOR OF ENCLOSED TYPE. SHIPPED LOOSE FOR OPEN TYPE.

INDICATORS

☐ **14A/14B:** ADDITIONAL AUXILIARY CONTACT SETS. ONE SET IS SUPPLIED AS STANDARD. SPECIFY TOTAL QUANTITY WHEN MORE THAN ONE SET IS REQUIRED.
TOTAL QUANTITY_____

INDICATORS (CONT'D.)

☐ **9C/9D** : ONE SET OF SIGNAL LIGHTS CONSISTING OF: ONE SIGNAL LIGHT (GREEN) TO INDICATE NORMAL SOURCE AVAILABLE AND ONE SIGNAL LIGHT (RED) TO INDICATE EMERGENCY SOURCE AVAILABLE. INSTALLED ON DOOR OF ENCLOSED TYPE. SHIPPED LOOSE FOR OPEN TYPE.

PLANT EXERCISER

☐ **11C:** ENGINE GENERATOR EXERCISING TIMER WITH "LOAD" OR "NO-LOAD" OPERATING MODES. ADJUSTABLE FROM 1 MINUTE TO 24 HOURS IN 1 MINUTE INCREMENTS. FACTORY SET FOR 20 MINUTES MINIMUM EACH WEEK UNLESS OTHERWISE SPECIFIED. REFER TO OPERATOR'S MANUAL FOR MODE SELECTION.

MOTOR LOAD TRANSFER

☐ **27:** INPHASE MONITOR CONTROL FOR TRANSFER AND RETRANSFER OF MOTOR LOADS, SO THAT INRUSH CURRENTS DO NOT EXCEED NORMAL STARTING CURRENTS, TO AVOID NUISANCE TRIPPING OF CIRCUIT BREAKERS AND POSSIBLE MECHANICAL DAMAGE TO MOTOR COUPLINGS.

DIAGRAM

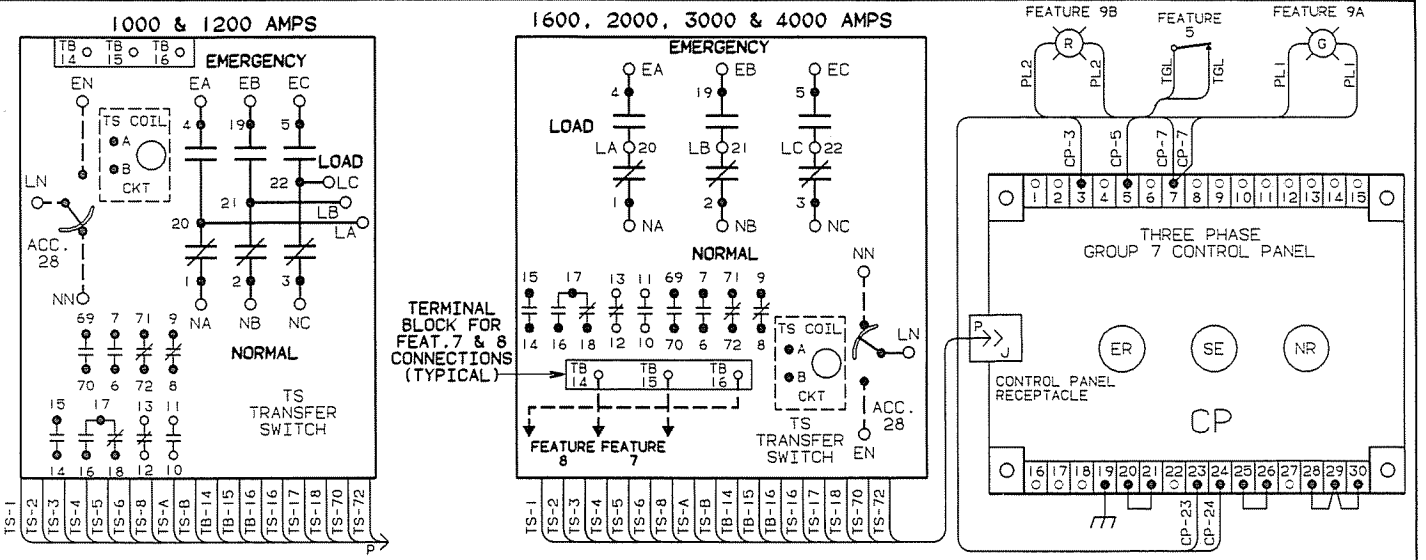

ELEMENTARY WIRING DIAGRAM

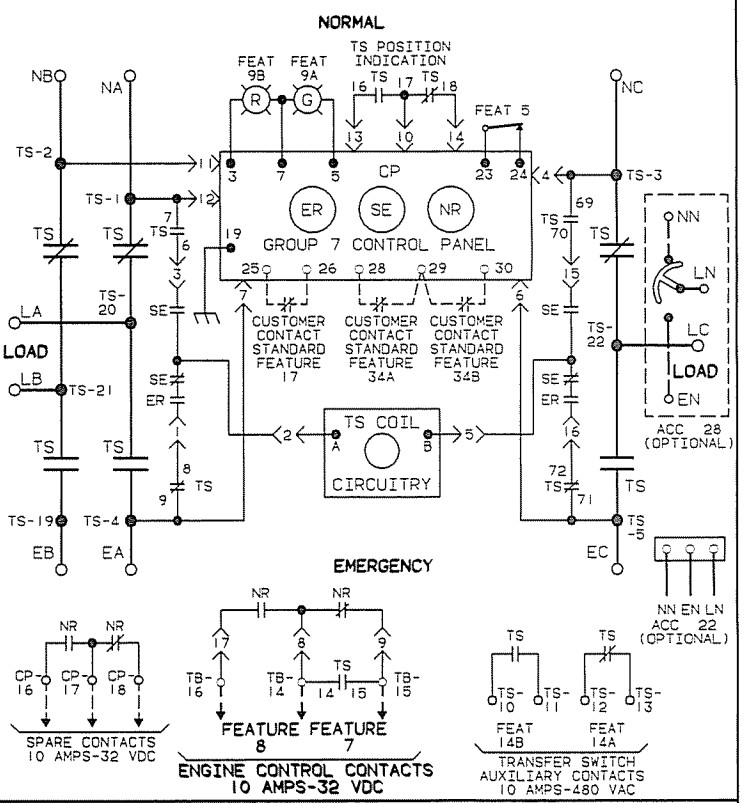

THREE PHASE/SINGLE PHASE SELECTION

S. THREE PHASE CONTROL MAY BE OPERATED ON SINGLE PHASE SOURCES BY OPERATING A SWITCH IN THE CONTROL PANEL. THE SINGLE PHASE SOURCES MUST BE CONNECTED TO POWER TERMINALS NA/NC AND EA/EC. REFER TO OPERATORS' MANUAL.

GENERAL NOTES

1. SWITCH SHOWN DE-ENERGIZED AND CONNECTED TO NORMAL SOURCE.
2. DEVICE SYMBOLS AND DESIGNATIONS ARE IN ACCORDANCE WITH NEMA PUB.ICS 1-1983. PART 1-101A.
3. WIRES: #20 AWG ON 30-150 AMPS AND #16 AWG ON 260-4000 AMPS, STRANDED COPPER.

○ INDICATES CUSTOMER CONNECTION POINTS.

5. ● INDICATES FACTORY CONNECTION POINTS.
6. CONNECTION POINTS THAT HAVE BOTH CUSTOMER CONNECTIONS AND FACTORY CONNECTIONS ARE SHOWN OPEN AS CUSTOMER CONNECTION POINTS.
7. ON ENCLOSED TYPE SWITCHES THE TRANSFER UNIT IS MOUNTED ON THE BACK INSIDE SURFACE AND THE CONTROL PANEL ON THE INSIDE DOOR SURFACE. WHEN AN ADDITIONAL ACCESSORY MOUNTING PANEL IS REQUIRED TO MOUNT OPTIONAL ACCESSORIES, IT IS LOCATED DIRECTLY BELOW THE CONTROL PANEL.
8. ALL FEATURES AND OPTIONS SHOWN ARE UL RECOGNIZED.
9. CUSTOMER REMOTE CONTACTS THAT ARE CONNECTED TO A.T.S. CONTROLS SHOULD BE SUITABLE FOR LOW ENERGY CIRCUITS.
10. REFER TO OPERATOR'S MANUAL FOR WIRING OF OPTIONAL ACCESSORIES SHOWN BELOW.
11. ADJUSTMENTS FOR PICKUP AND DROPOUT SETTINGS ARE IN INCREMENTS OF 1%. TIME DELAY ADJUSTMENTS ARE IN DISCRETE INCREMENTS.
12. ON OPEN TYPE SWITCHES, CONTROL PANEL (CP) TERMINAL 19 MUST BE CONNECTED TO GROUND POTENTIAL. A TAGGED WIRE IS PROVIDED PRE-CONNECTED TO CP TERMINAL 19 FOR THIS PURPOSE.
13. **AN OPERATORS MANUAL IS FURNISHED WITH EACH AUTOMATIC TRANSFER SWITCH. REFER TO THIS PUBLICATION PRIOR TO INSTALLATION AND OPERATION OF THE SWITCH**

TRANSFER SWITCH OPTIONS

☐ **22**: SOLID NEUTRAL, WITH FULL RATED TERMINALS. **AL-CU, UL** LISTED. SHIPPED LOOSE FOR OPEN TYPE.

☐ **28**: OVERLAPPING NEUTRAL TRANSFER CONTACTS. ASSURES PROPER GROUND FAULT SENSING AND AVOIDS POSSIBLE PHASE OVERVOLTAGES DURING TRANSFER OF NEUTRAL BETWEEN NORMAL AND EMERGENCY. **NOTE; NORMAL AND EMERGENCY CONTACTS, ON ACC. 28 POLE ARE REVERSED ON 30-150 AMP AND 1600-4000 AMP SWITCHES.** (SEE ABOVE DIAGRAMS).

☐ **SEE ATTACHED SHEET FOR ADDITIONAL ACCESSORIES.**

COMPUTER GENERATED DRAWING

BASIC CATALOG NUMBERS ASCO	POLES	AMPS	VOLT CODE	STD ACC CODE	OPT ACC CODE	ENCLOSURE CODE
940	3	30	4	7		C TYPE 1
		70				TYPE 2
		100				TYPE 3R
		150	6			TYPE 4
		260				TYPE 7
		400	9			TYPE 12
		600				
		800	G			OPEN TYPE NO SUFFIX REQ'D
		1000				
		1200	X			
		1600				
		2000				
		3000				
		4000				

VOLTAGE CODE	DESCRIPTION OPERATING FREQ 50-60 HZ
4	208Y/120V, 190 TO 208V
6	240/120V TAPPED DELTA
	220 TO 240V
9	480Y/277V, 460Y/265V
	440 TO 480V
G	600Y/347V
	550 TO 600V
X	OTHER VOLTAGES

CATALOG NUMBER _____
CERTIFIED TO ASCO® S.O. _____
DATE _____ BY _____

COMPOSITE 3 PHASE WIRING DIAGRAM FOR ASCO® 940 AUTOMATIC TRANSFER SWITCHES WITH MICROPROCESSOR GROUP 7 CONTROLS

	BY	DATE
DRAWN	CC	3/93
CHECKED		
DFTG APL	FM	4/93
ENG APL	SH	4/93

Automatic Switch Co.® FLORHAM PARK, N.J. 07932, PRINTED IN U.S.A.

AL ☒ AP ☒ CE ☒ AS ☒ AN ☒ AD ☒

PROPERTY OF AUTOMATIC SWITCH CO. USE PERMITTED FOR OUR WORK ONLY. ALL RIGHTS OF DESIGN OR INVENTION ARE RESERVED.

E.R. NO	ITEM CHGD	CHG	DATE	APVD
38314	SEE ECN	A	12/95	SH
25312	ISSUED	-	4/93	PM

JS 465935

CHG LTR: A

PHYSICAL WIRING

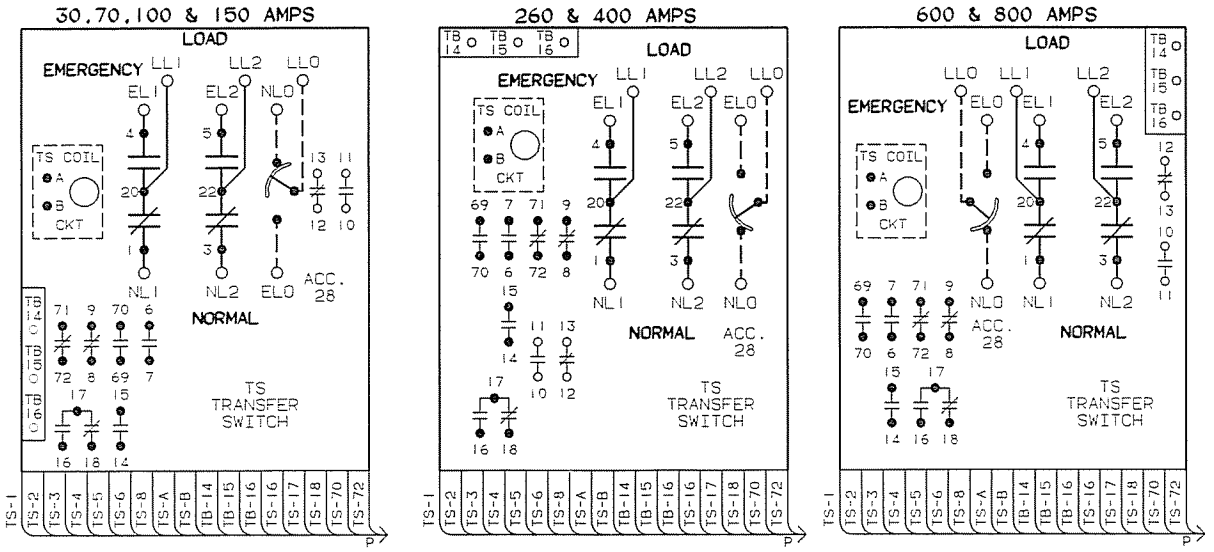

STANDARD FEATURES

VOLTAGE AND FREQUENCY SENSING

A. SINGLE PHASE CLOSE DIFFERENTIAL VOLTAGE SENSING OF NORMAL SOURCE. PICKUP VOLTAGE IS ADJUSTABLE FROM 85% TO 100% OF NOMINAL AND THE DROPOUT IS ADJUSTABLE FROM 75% TO 98% OF THE PICKUP VALUE. FACTORY SET TO PICKUP AT 90% AND DROPOUT AT 85% OF NOMINAL UNLESS OTHERWISE SPECIFIED. **STANDARD FEATURE 4A.**

B. SINGLE PHASE VOLTAGE SENSING OF EMERGENCY SOURCE. PICKUP ADJUSTABLE FROM 85% TO 100% OF NOMINAL. FACTORY SET TO PICKUP AT 90% UNLESS OTHERWISE SPECIFIED.

C. FREQUENCY SENSING OF EMERGENCY SOURCE. PICKUP ADJUSTABLE FROM 90% TO 100% OF NOMINAL. FACTORY SET TO PICKUP AT 95% UNLESS OTHERWISE SPECIFIED.

TIME DELAYS

D. TIME DELAY TO OVERRIDE MOMENTARY NORMAL SOURCE OUTAGES TO DELAY ALL TRANSFER SWITCH AND ENGINE STARTING SIGNALS. ADJUSTABLE FROM 0 TO 6 SECONDS. FACTORY SET AT 1 SECOND UNLESS OTHERWISE SPECIFIED. **STANDARD FEATURE 1.**

E. RETRANSFER TO NORMAL TIME DELAY. TIME DELAY IS AUTOMATICALLY BYPASSED IF EMERGENCY SOURCE FAILS AND NORMAL SOURCE IS AVAILABLE. ADJUSTABLE FROM 0 TO 30 MINUTES. FACTORY SET AT 30 MINUTES UNLESS OTHERWISE SPECIFIED. **STANDARD FEATURE 3A.**

F. UNLOADED RUNNING TIME DELAY FOR EMERGENCY ENGINE GENERATOR COOLDOWN. ADJUSTABLE FROM 0 TO 60 MINUTES. FACTORY SET AT 5 MINUTES UNLESS OTHERWISE SPECIFIED. **STANDARD FEATURE 2E.**

G. TRANSFER TO EMERGENCY TIME DELAY. ADJUSTABLE FROM 0 TO 5 MINUTES. FACTORY SET AT 0 MINUTES UNLESS OTHERWISE SPECIFIED. **STANDARD FEATURE 2B.**

MANUAL CONTROLS

H. MOMENTARY TYPE TEST SWITCH (TGL) TO SIMULATE NORMAL SOURCE FAILURE. INSTALLED ON DOOR OF ENCLOSED TYPE. SHIPPED LOOSE FOR OPEN TYPE. **STANDARD FEATURE 5.**

REMOTE AUTOMATIC TRANSFER SWITCH CIRCUITS

J. TERMINAL PROVISIONS FOR REMOTE CUSTOMER CONTACT WHICH OPENS TO SIGNAL A.T.S. TO TRANSFER TO EMERGENCY. REFER TO OPERATOR'S MANUAL TO ACTIVATE. **STANDARD FEATURE 17.** (SEE NOTE 9)

ENGINE CONTROL CONTACTS

K. ONE SET OF CONTACTS CONSISTING OF: ONE CONTACT THAT CLOSES WHEN NORMAL SOURCE FAILS AND ONE CONTACT THAT OPENS WHEN NORMAL SOURCE FAILS. CONTACTS ARE GOLD FLASHED FOR LOW VOLTAGE ENGINE START SIGNALS OR OTHER CUSTOMER USE. RATED 10 AMPS, 32 VOLTS DC. **STANDARD FEATURE 7/8.**

INDICATORS

L. ONE SET OF AUXILIARY CONTACTS CONSISTING OF: ONE CONTACT CLOSED WHEN A.T.S. IS CONNECTED TO NORMAL AND ONE CONTACT CLOSED WHEN A.T.S. IS CONNECTED TO EMERGENCY. (ADDITIONAL SETS OF AUXILIARY CONTACTS ARE AVAILABLE AS OPTIONS - SEE BELOW). **STANDARD FEATURE 14A/14B.**

M. ONE SET OF SIGNAL LIGHTS CONSISTING OF: ONE SIGNAL LIGHT (GREEN) TO INDICATE WHEN A.T.S. IS CONNECTED TO NORMAL SOURCE AND ONE SIGNAL LIGHT (RED) TO INDICATE WHEN A.T.S. IS CONNECTED TO EMERGENCY SOURCE. LIGHTS ARE INSTALLED ON DOOR OF ENCLOSED TYPE. SHIPPED LOOSE FOR OPEN TYPE. **STANDARD FEATURE 9A/9B.**

TRANSFER INHIBIT

N. TERMINAL PROVISIONS FOR REMOTE CUSTOMER CONTACT(S) TO INHIBIT A.T.S. TRANSFER TO NORMAL AND/OR EMERGENCY SOURCE. CUSTOMER CONTACT OPENS TO INHIBIT TRANSFER. REFER TO OPERATOR'S MANUAL TO ACTIVATE. **STANDARD FEATURE 34A/34B.** (SEE NOTE 9)

COMMIT/NO COMMIT ON TRANSFER

P. UPON FEATURE 1 TIMING OUT (DUE TO A TEST OR NORMAL SOURCE FAILURE) THE A.T.S. IS COMMITTED TO TRANSFER TO EMERGENCY, EVEN IF THE NORMAL SOURCE IS RESTORED BEFORE THE TRANSFER TAKES PLACE. THIS "COMMIT ON TRANSFER" FEATURE CAN BE OVERRIDDEN BY OPERATING A SWITCH IN THE CONTROL PANEL. REFER TO OPERATOR'S MANUAL.

FREQUENCY SELECTION

R. OPERATING FREQUENCIES OF 50HZ. OR 60HZ. MAY BE SELECTED BY A SWITCH IN THE CONTROL PANEL. FACTORY SET AT SPECIFIED FREQUENCY. REFER TO OPERATOR'S MANUAL.

OPTIONAL ACCESSORIES

MANUAL CONTROLS

☐ **6B**: MOMENTARY OVERRIDE SWITCH TO MANUALLY BYPASS TIME DELAY ON RETRANSFER TO NORMAL. INSTALLED ON DOOR OF ENCLOSED TYPE. SHIPPED LOOSE FOR OPEN TYPE.

☐ **6C**: MOMENTARY RESET SWITCH FOR MANUAL RETRANSFER OF THE A.T.S TO THE NORMAL SOURCE ONLY AFTER TIME DELAY FEATURE 3A EXPIRES WITH INSTANTANEOUS AUTOMATIC RETRANSFER IN THE EVENT OF EMERGENCY SOURCE FAILURE. INSTALLED ON DOOR OF ENCLOSED TYPE. SHIPPED LOOSE FOR OPEN TYPE.

INDICATORS

☐ **14A/14B**: ADDITIONAL AUXILIARY CONTACT SETS. ONE SET IS SUPPLIED AS STANDARD. SPECIFY TOTAL QUANTITY WHEN MORE THAN ONE SET IS REQUIRED. **TOTAL QUANTITY**_____

INDICATORS (CONT'D.)

☐ **9C/9D** : ONE SET OF SIGNAL LIGHTS CONSISTING OF: ONE SIGNAL LIGHT (GREEN) TO INDICATE NORMAL SOURCE AVAILABLE AND ONE SIGNAL LIGHT (RED) TO INDICATE EMERGENCY SOURCE AVAILABLE. INSTALLED ON DOOR OF ENCLOSED TYPE. SHIPPED LOOSE FOR OPEN TYPE.

PLANT EXERCISER

☐ **11C**: ENGINE GENERATOR EXERCISING TIMER WITH "LOAD" OR "NO-LOAD" OPERATING MODES. ADJUSTABLE FROM 1 MINUTE TO 24 HOURS IN 1 MINUTE INCREMENTS. FACTORY SET FOR 20 MINUTES MINIMUM EACH WEEK UNLESS OTHERWISE SPECIFIED. REFER TO OPERATOR'S MANUAL FOR MODE SELECTION.

MOTOR LOAD TRANSFER

☐ **27**: INPHASE MONITOR CONTROL FOR TRANSFER AND RETRANSFER OF MOTOR LOADS, SO THAT INRUSH CURRENTS DO NOT EXCEED NORMAL STARTING CURRENTS, TO AVOID NUISANCE TRIPPING OF CIRCUIT BREAKERS AND POSSIBLE MECHANICAL DAMAGE TO MOTOR COUPLINGS.

DIAGRAM

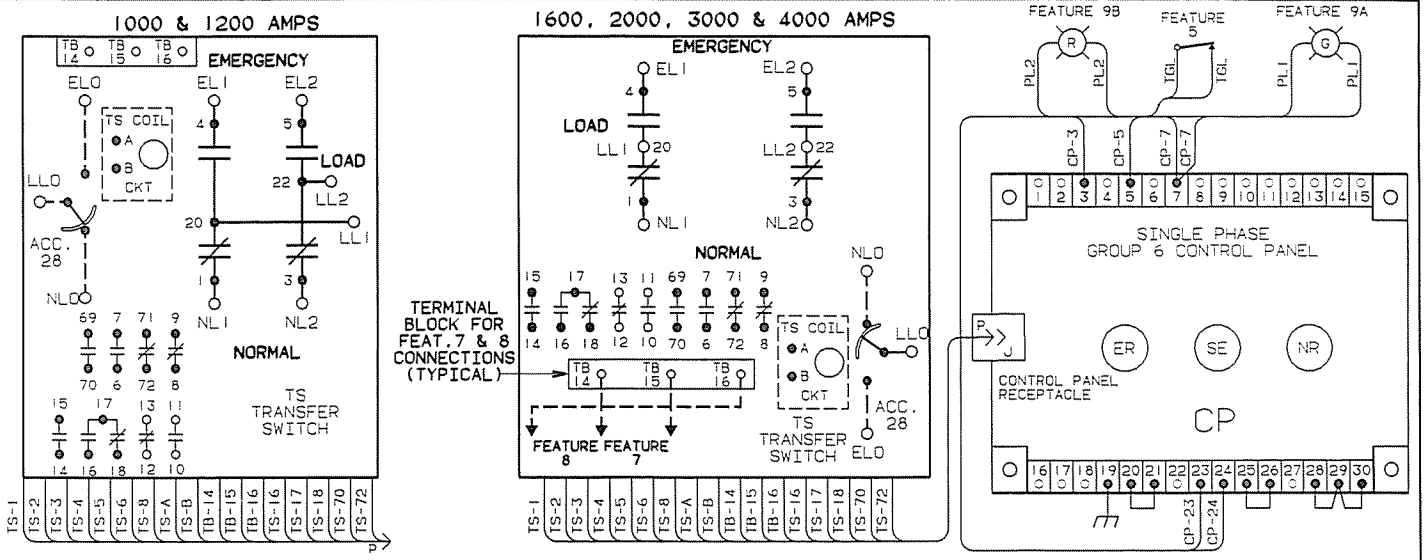

ELEMENTARY WIRING DIAGRAM

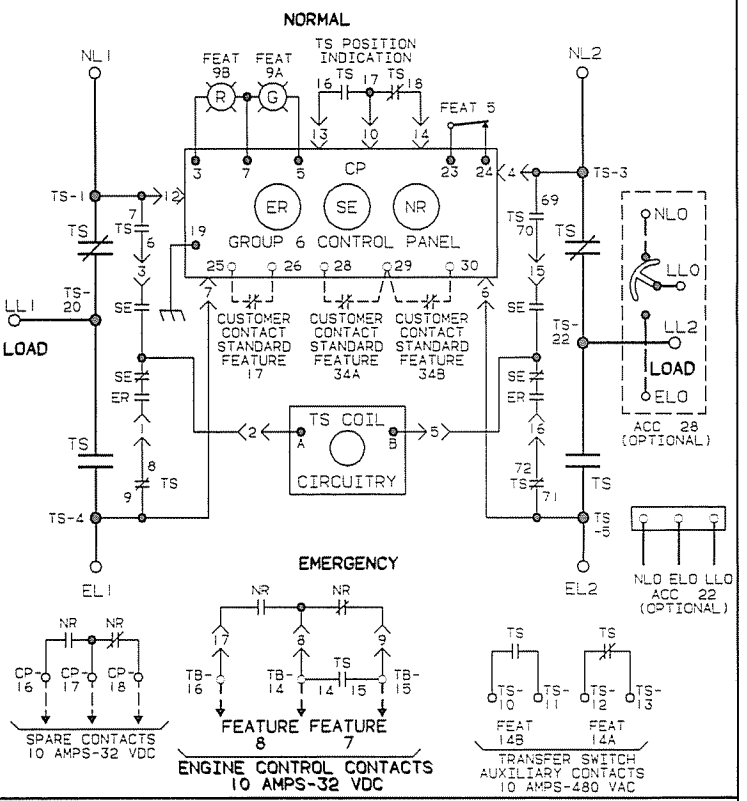

GENERAL NOTES

1. SWITCH SHOWN DE-ENERGIZED AND CONNECTED TO NORMAL SOURCE.
2. DEVICE SYMBOLS AND DESIGNATIONS ARE IN ACCORDANCE WITH NEMA PUB. ICS 1-1983, PART 1-101A.
3. WIRES: #20 AWG ON 30-150 AMPS AND #16 AWG ON 260-4000 AMPS, STRANDED COPPER.
4. ○ INDICATES CUSTOMER CONNECTION POINTS.
   ● INDICATES FACTORY CONNECTION POINTS.
   CONNECTION POINTS THAT HAVE BOTH CUSTOMER CONNECTIONS AND FACTORY CONNECTIONS ARE SHOWN OPEN AS CUSTOMER CONNECTION POINTS.
7. ON ENCLOSED TYPE SWITCHES THE TRANSFER UNIT IS MOUNTED ON THE BACK INSIDE SURFACE AND THE CONTROL PANEL ON THE INSIDE DOOR SURFACE. WHEN AN ADDITIONAL ACCESSORY MOUNTING PANEL IS REQUIRED TO MOUNT OPTIONAL ACCESSORIES, IT IS LOCATED DIRECTLY BELOW THE CONTROL PANEL.
8. ALL FEATURES AND OPTIONS SHOWN ARE UL RECOGNIZED.
9. CUSTOMER REMOTE CONTACTS THAT ARE CONNECTED TO A.T.S. CONTROLS SHOULD BE SUITABLE FOR LOW ENERGY CIRCUITS.
10. REFER TO OPERATOR'S MANUAL FOR WIRING OF OPTIONAL ACCESSORIES SHOWN BELOW.
11. ADJUSTMENTS FOR PICKUP AND DROPOUT SETTINGS ARE IN INCREMENTS OF 1%. TIME DELAY ADJUSTMENTS ARE IN DISCRETE INCREMENTS.
12. ON OPEN TYPE SWITCHES, CONTROL PANEL (CP) TERMINAL 19 MUST BE CONNECTED TO GROUND POTENTIAL. A TAGGED WIRE IS PROVIDED PRE-CONNECTED TO CP TERMINAL 19 FOR THIS PURPOSE.
13. **AN OPERATOR'S MANUAL IS FURNISHED WITH EACH AUTOMATIC TRANSFER SWITCH. REFER TO THIS PUBLICATION PRIOR TO INSTALLATION AND OPERATION OF THE SWITCH**

TRANSFER SWITCH OPTIONS

☐ **22**: SOLID NEUTRAL, WITH FULL RATED TERMINALS. **AL-CU, UL** LISTED. SHIPPED LOOSE FOR OPEN TYPE.

☐ **28**: OVERLAPPING NEUTRAL TRANSFER CONTACTS. ASSURES PROPER GROUND FAULT SENSING AND AVOIDS POSSIBLE PHASE OVERVOLTAGES DURING TRANSFER OF NEUTRAL BETWEEN NORMAL AND EMERGENCY. **NOTE: NORMAL AND EMERGENCY CONTACTS, ON ACC. 28 POLE ARE REVERSED ON 30-150 AMP AND 1600-4000 AMP SWITCHES.** (SEE ABOVE DIAGRAM)

☐ **SEE ATTACHED SHEET FOR ADDITIONAL ACCESSORIES.**

COMPUTER GENERATED DRAWING

BASIC CATALOG NUMBERS ASCO	POLES	AMPS	VOLT CODE	STD ACC CODE	OPT ACC CODE	ENCLOSURE CODE
940	2	30		6		C TYPE 1
		70	3			TYPE 2
		100				TYPE 3R
		150	6			TYPE 4
		250				TYPE 7
		400	9			TYPE 12
		600				OPEN TYPE NO SUFFIX REQ'D
		800	G			
		1000				
		1200	X			
		1600				
		2000				
		3000				
		4000				

VOLTAGE CODE	DESCRIPTION OPERATING FREQ 50-60 HZ
3	110 TO 120V
6	120/240V 115/230V
	190 TO 208V
	220 TO 240V
9	440 TO 480V
G	347/600V
	550 TO 600V
X	OTHER VOLTAGES

CATALOG NUMBER _____
CERTIFIED
TO ASCO® S.O. _____

COMPOSITE SINGLE PHASE WIRING DIAGRAM FOR ASCO® 940 AUTOMATIC TRANSFER SWITCHES WITH MICROPROCESSOR GROUP 6 CONTROLS

	BY	DATE
DRAWN	CC	3/93
CHECKED		
DFTG APL	FM	4/93
ENG APL	SH	4/93

Automatic Switch Co.® FLORHAM PARK, N.J. 07932. PRINTED IN U.S.A.

AL ☒ AP ☒ CE ☒ AS ☒ AN ☒ AD ☒

PROPERTY OF AUTOMATIC SWITCH CO. SUBMITTED FOR OUR USE ONLY. ALL RIGHTS OF DESIGN OR INVENTION ARE RESERVED

E.R. NO	ITEM CHGD	CHG	DATE	APVD
38314	SEE ECN	A	12/95	SH
28312	ISSUED	-	4/93	FM

JS 465934

DWG LTR A

30 THRU 150 AMPS

AMP SIZE	DIMENSIONS						
	A	B	C	D	E	F	G
30 TO 100	10.25 260.4	10.25 260.4	5.50 139.7	7.75 196.9	1.62 41.1	8.75 222.3	0.75 19.1
150	10.25 260.4	10.25 260.4	5.37 136.4	7.75 196.9	1.62 41.1	8.75 222.3	0.75 19.1
	H	J	K	L	V		
30 TO 100	3.48 88.4	0.73 18.5	2.09 53.1	0.31 Ø7.9	0.79 20.1		
150	4.46 113.3	0.96 24.4	0.90 22.9	0.31 Ø7.9	0.46 11.7		

APPROXIMATE SHIPPING WEIGHT, LBS (KG)
(WEIGHT INCLUDES STANDARD TRANSFER SWITCH & CONTROLS)

AMP SIZE	POLES	WEIGHT
30, 70 & 100	2	15 (7)
	3	18 (8)
	3 W/ACC.28	21 (10)
150	2	17 (8)
	3	20 (9)
	3 W/ACC.28	23 (11)
260 & 400	2	37 (17)
	3	45 (21)
	3 W/ACC.28	53 (24)

SUGGESTED BOLT SIZE FOR MOUNTING A.T.S.:
1/4-20 X 1 INCH LONG MINIMUM QUANTITY (4)

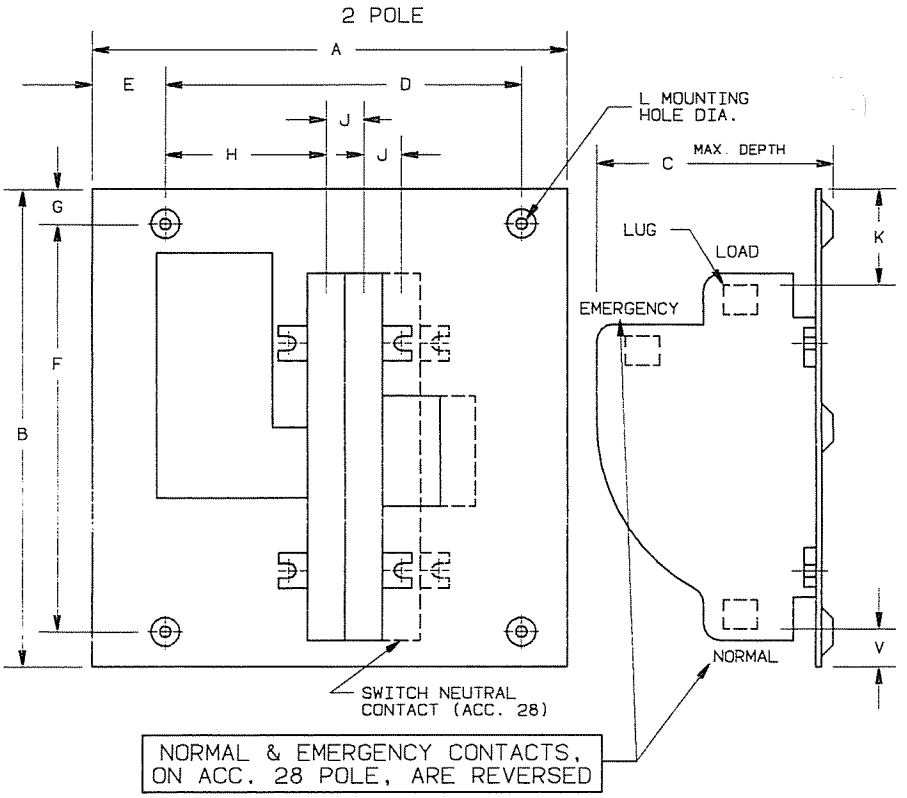

260 THRU 400 AMP.

WARNING
SUPPLIED BACKING PIECE MUST BE INSTALLED AS SHOWN.

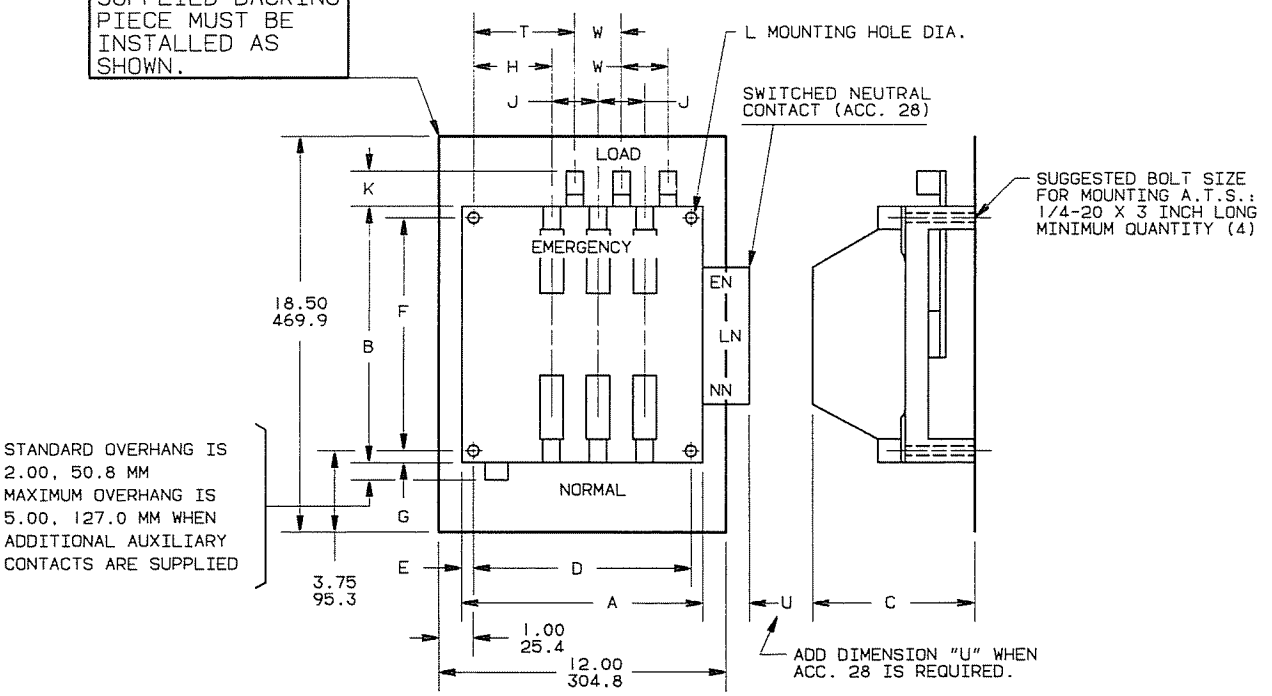

STANDARD OVERHANG IS 2.00, 50.8 MM
MAXIMUM OVERHANG IS 5.00, 127.0 MM WHEN ADDITIONAL AUXILIARY CONTACTS ARE SUPPLIED

2 AND 3 POLE WITH AND WITHOUT ACC. 28

DIMENSIONS															
A	B	C	D	E	F	G	H	J	K	L	T	U	W		
11.00 279.4	12.00 304.8	6.87 174.5	10.00 254.0	0.50 12.7	11.00 279.4	0.50 12.7	3.87 98.3	2.12 53.8	2.12 53.8	0.31 Ø7.9	4.93 125.2	3.00 76.2	2.12 53.8		

30 THRU 150 AMPS

3 POLE

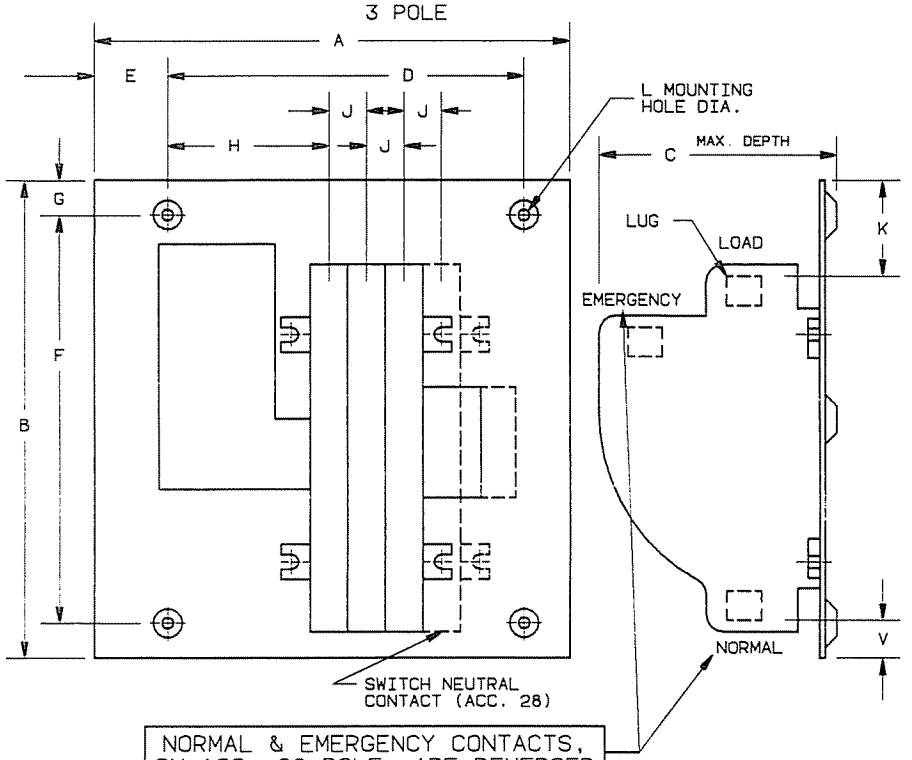

NORMAL & EMERGENCY CONTACTS, ON ACC. 28 POLE, ARE REVERSED

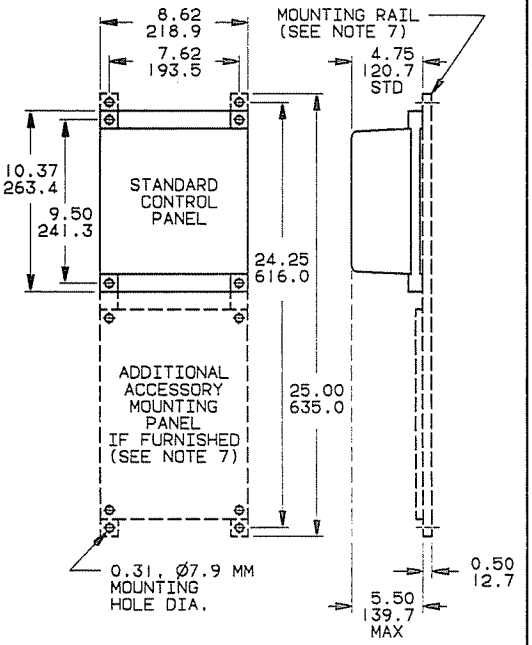

STANDARD CONTROL PANEL
WITH ADDITIONAL ACCESSORY MOUNTING PANEL AND CHANNELS USED WITH ANY SIZE TRANSFER SWITCH UNIT

SUGGESTED BOLT SIZE FOR MOUNTING CONTROLS: 1/4-20 X 1 1/2 INCH SELF CLINCHING CAPTIVE STUDS AS REQUIRED.

GENERAL NOTES

1. FOR 260 AND 400 AMP TWO POLE SWITCHES, OMIT CENTER POLE.
2. WHEN INSTALLING, CONNECT NORMAL, EMERGENCY, AND LOAD CONDUCTORS TO SIMILARLY MARKED TERMINALS.
3. ALL INTERNAL CONNECTIONS ARE MADE AT THE FACTORY
4. MAINTAIN ELECTRICAL CLEARANCE OF 0.50, 12.7 MM. MINIMUM BETWEEN LIVE METAL PARTS AND GROUNDED METAL.
5. WHEN OPEN TYPE ATS'S ARE INTENDED FOR ENCLOSURE TYPE MOUNTING BY OTHERS, MOUNT THE TRANSFER SWITCH UNIT ON THE INSIDE BACK SURFACE AND THE CONTROL PANEL(S) ON THE INSIDE DOOR SURFACE.
6. THE CONTROL PANEL IS CONNECTED TO THE TRANSFER SWITCH PANEL BY A WIRE HARNESS WITH A QUICK DISCONNECT PLUG. HARNESS LENGTH IS - 36.00, 914.4 MM. FOR 30-150 AMP. SWITCHES AND 45.00, 1143.0 MM. FOR 260-400 AMP. SWITCHES. CONSULT FACTORY FOR AVAILABLE EXTENSION HARNESSES.
7. OPTIONAL ACCESSORY MOUNTING PANEL AND RAILS ARE SUPPLIED ON OPEN TYPE SWITCHES FOR MOUNTING OPTIONAL TIME DELAYS, RELAYS, AND MONITORS.
8. **AN OPERATOR'S MANUAL IS FURNISHED WITH EACH AUTOMATIC TRANSFER SWITCH. REFER TO THIS PUBLICATION PRIOR TO INSTALLATION AND OPERATION OF THE SWITCH.**

DRILL PATTERN BELOW WILL ACCOMMODATE MOST DOOR MOUNTED ACCESSORIES. REFER TO ASCO SUPPLIED ACCESSORY NAMEPLATE DRAWING FOR ACTUAL DOOR DRILLING REQUIREMENTS.

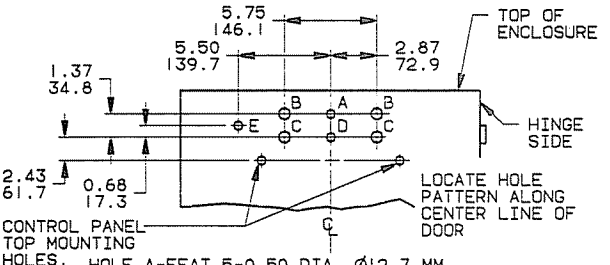

HOLE A-FEAT 5-0.50 DIA, Ø12.7 MM
HOLE B-FEAT 9A & 9B-0.71 DIA, Ø18.0 MM
HOLE C-ACC 9C & 9D-0.71 DIA, Ø18.0 MM
HOLE D-ACC 6A, 6B, OR 6C-0.50 DIA, Ø12.7 MM
HOLE E-ACC 12 OR 16-0.50 DIA, Ø12.7 MM

SIZES OF UL LISTED SOLDERLESS SCREW TYPE TERMINALS FOR EXTERNAL POWER CONNECTIONS

SWITCH RATING (AMPS)	RANGE OF AL-CU WIRE SIZE
30	ONE #14 TO #6 AWG
70	ONE #14 TO 1/0 AWG
100	ONE #14 TO 2/0 AWG
150	ONE #8 TO 3/0 AWG
* 260-400	TWO #1/0 AWG TO 250 MCM OR ONE #4 AWG TO 600 MCM

* CONTACT FACTORY FOR BUS CONNECTION DRAWINGS

INCHES / MM

THIRD ANGLE PROJECTION

CATALOG NO. CERTIFIED

TO ASCO ® S. O. _____

DATE _____ BY _____

COMPUTER GENERATED DRAWING

Automatic Switch Co. ©
FLORHAM PARK, NEW JERSEY, 07932
PRINTED IN U.S.A.

	BY	DATE
DRAWN	FDN	11/88
CHECKED	NS	11/88
DFTG APVL	NS	11/88
ENGR APVL	FM	11/88

PROPERTY OF AUTOMATIC SWITCH CO. USE PERMITTED FOR OUR WORK ONLY. ALL RIGHTS OF DESIGN OR INVENTION ARE RESERVED.

☒ AL	☒ AP	☒ CE	☒ AS	☒ AN
☒ AD	☐ AA	☐	☐	☐

COMPOSITE OUTLINE AND MOUNTING DIMENSIONS FOR OPEN TYPE 30 THROUGH 400 AMPERE ASCO® 940 AUTOMATIC TRANSFER SWITCHES 2 & 3 POLE WITH OR WITHOUT ACC. 28 OVERLAPPING NEUTRAL TRANSFER CONTACT

110272	SEE ECN	B	9/89	FM
109279	ACC. 28	A	6/89	PDG
107077	ISSUED	-	11/88	FM
ER NO	ITEM CHGD	CHG	DATE	APVL

JS 401950

CHG LTR: B

600 THRU 800 AMP

AMP SIZE	DIMENSIONS						
	A	B	C	D	E	F	G
600 & 800	19.25 489.0	25.00 635.0	11.00 279.4	18.37 466.6	0.43 10.9	7.50 190.5	1.25 31.8
1000 & 1200	19.62 498.3	30.00 762.0	13.00 330.2	18.87 479.3	0.37 9.4	31.25 793.8	0.62 15.7

AMP SIZE	DIMENSIONS						
	H	J	K	L	M	N	P
600 & 800	6.87 174.5	3.50 88.9	1.75 44.5	0.50 Ø12.7	—	—	—
1000 & 1200	7.50 190.5	4.28 108.7	5.06 128.5	0.43 Ø10.9	11.93 303.0	32.50 825.5	2.34 59.5

AMP SIZE	DIMENSIONS						
	R	S	T	W	X		
600 & 800	—	—	5.12 130.0	3.50 88.9	—		
1000 & 1200	3.19 81.0	12.59 319.8	—	3.68 93.5	8.25 209.5		

APPROXIMATE SHIPPING WEIGHT, LBS (KG) (WEIGHT INCLUDES STANDARD TRANSFER SWITCH & CONTROLS)				
AMPERES	POLES	WEIGHT	POLES	WEIGHT
600-800	2	135 (62)	3	145 (66)
1000-1200	2	300 (136)	3	320 (145)
1600-2000	2	355 (161)	3	385 (175)
3000	2	750 (340)	3	900 (409)
4000	2	975 (443)	3	1200 (545)

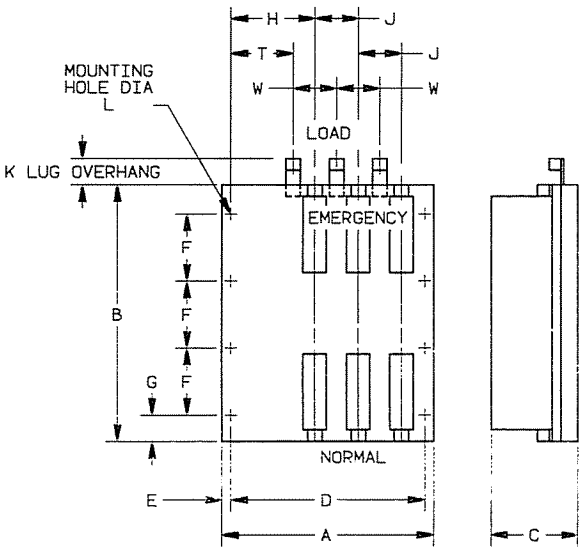

1600 THRU 4000 AMP

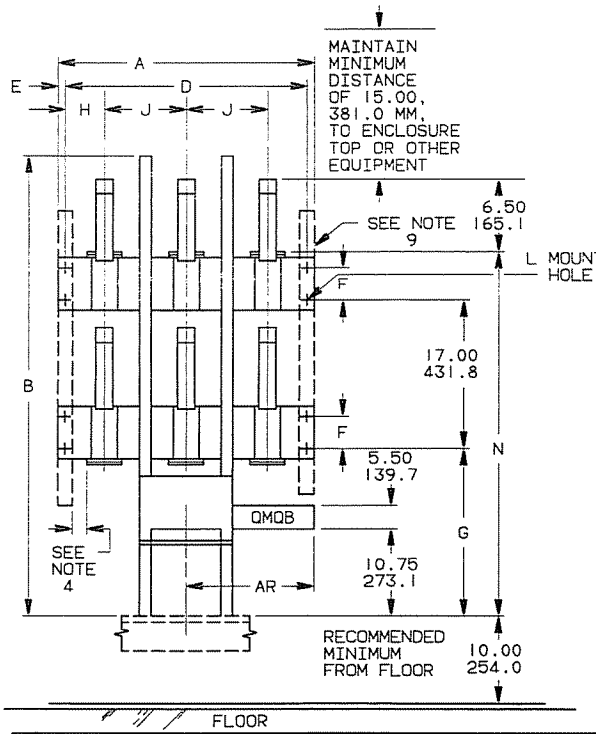

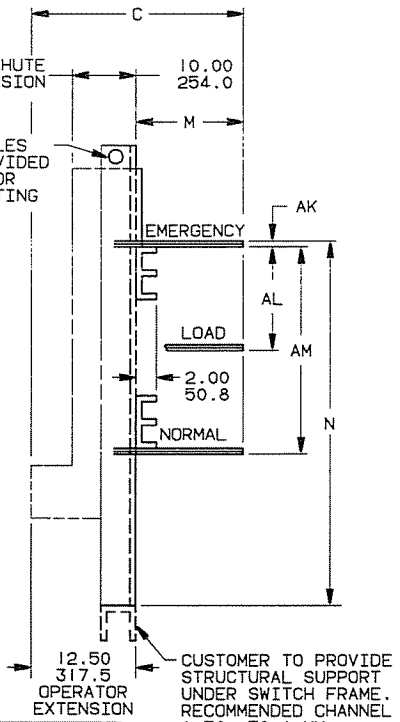

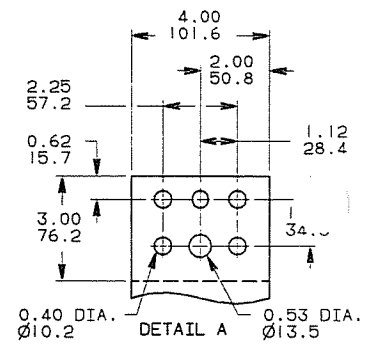

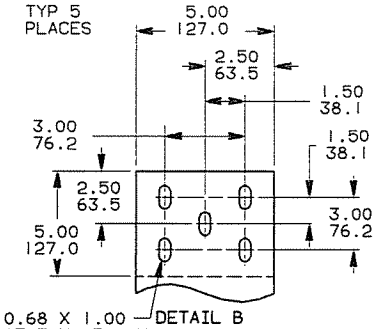

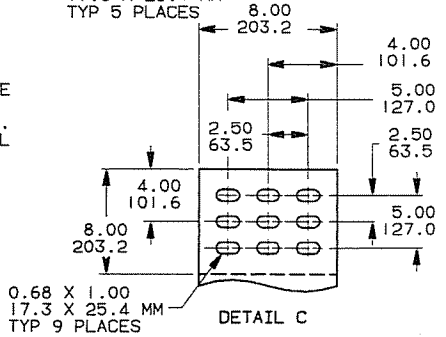

AMP SIZE	DIMENSIONS								
	A	B	C	D	E	F	G	H	J
1600 & 2000	28.50 723.9	52.00 1320.8	18.50 469.9	27.00 685.8	0.75 19.1	4.37 111.0	20.65 524.5	4.50 114.3	9.00 228.6
3000	31.50 800.1	52.00 1320.8	22.50 571.5	30.00 762.0	0.75 19.1	4.37 111.0	20.65 524.5	5.00 127.0	10.00 254.0
4000	41.00 1041.4	52.00 1320.8	25.50 647.7	39.00 990.6	1.00 25.4	4.37 111.0	20.65 524.5	6.50 165.1	13.00 330.2

AMP SIZE	DIMENSIONS								
	L	M	N	AK	AL	AM	AR		
1600 & 2000	0.40 Ø10.2	6.00 152.4	43.46 1103.9	0.50 12.7	11.62 295.1	23.75 603.3	—		
3000	0.40 Ø10.2	10.00 254.0	43.71 1110.4	0.75 19.1	11.75 298.5	24.00 609.6	20.50 520.7		
4000	0.40 Ø10.2	13.00 330.2	43.71 1110.4	0.75 19.1	11.75 298.5	24.00 609.6	19.50 495.3		

AMP SIZE	BUS BAR PER PHASE BOLTING SURFACE
1600 & 2000	TWO 0.25 X 4.00, 6.4 X 101.6 MM SEE DETAIL "A"
3000	TWO 0.37 X 5.00, 9.4 X 127.0 MM SEE DETAIL "B"
4000	TWO 0.37 X 8.00, 9.4 X 203.2 MM SEE DETAIL "C"

1000 THRU 1200 AMP

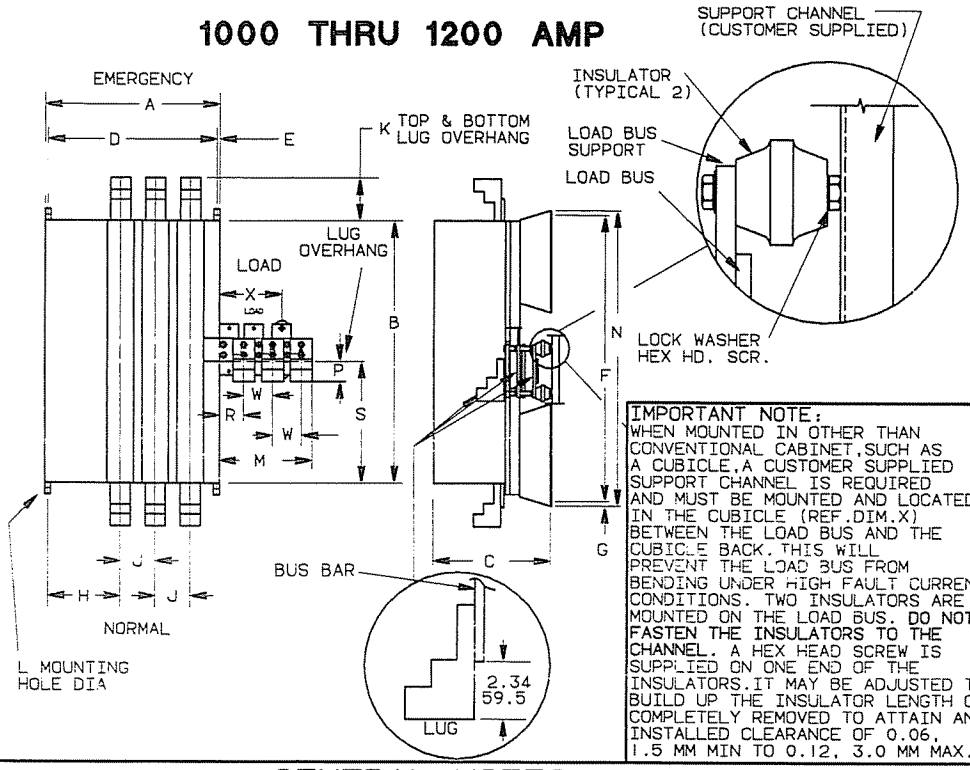

IMPORTANT NOTE:
WHEN MOUNTED IN OTHER THAN CONVENTIONAL CABINET, SUCH AS A CUBICLE, A CUSTOMER SUPPLIED SUPPORT CHANNEL IS REQUIRED AND MUST BE MOUNTED AND LOCATED IN THE CUBICLE (REF. DIM. X) BETWEEN THE LOAD BUS AND THE CUBICLE BACK. THIS WILL PREVENT THE LOAD BUS FROM BENDING UNDER HIGH FAULT CURRENT CONDITIONS. TWO INSULATORS ARE MOUNTED ON THE LOAD BUS. **DO NOT FASTEN THE INSULATORS TO THE CHANNEL.** A HEX HEAD SCREW IS SUPPLIED ON ONE END OF THE INSULATORS. IT MAY BE ADJUSTED TO BUILD UP THE INSULATOR LENGTH OR COMPLETELY REMOVED TO ATTAIN AN INSTALLED CLEARANCE OF 0.06, 1.5 MM MIN TO 0.12, 3.0 MM MAX.

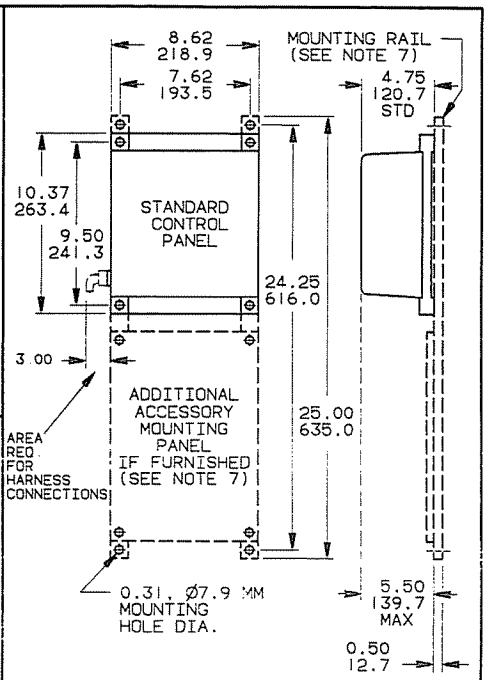

STANDARD CONTROL PANEL
WITH ADDITIONAL
ACCESSORY MOUNTING PANEL
AND CHANNELS USED WITH ANY SIZE
TRANSFER SWITCH UNIT

SUGGESTED BOLT SIZE FOR MOUNTING CONTROLS: 1/4-20 X 1 1/2 INCH SELF CLINCHING CAPTIVE STUDS AS REQUIRED.

GENERAL NOTES

1. FOR TWO POLE SWITCHES, OMIT CENTER POLE.
2. WHEN INSTALLING, CONNECT NORMAL , EMERGENCCY , AND LOAD CONDUCTORS TO SIMILARLY MARKED TERMINALS.
3. ALL INTERNAL CONNECTIONS ARE MADE AT THE FACTORY.
4. MAINTAIN ELECTRICAL CLEARANCE OF 1.00, 25.4 MM. MINIMUM BETWEEN LIVE METAL PARTS AND GROUNDED METAL.

   WHEN OPEN TYPE ATS'S ARE INTENDED FOR ENCLOSURE TYPE MOUNTING BY OTHERS, MOUNT THE TRANSFER SWITCH UNIT ON THE INSIDE BACK SURFACE AND THE CONTROL PANEL(S) ON THE INSIDE DOOR SURFACE.

6. THE CONTROL PANEL IS CONNECTED TO THE TRANSFER SWITCH PANEL BY A WIRE HARNESS WITH A QUICK DISCONNECT PLUG. HARNESS LENGTH IS - 50.00, 1270.0 MM FOR 600-800 AMPS, 60.00, 1524.0 MM FOR 1000-1200 AMPS, AND 96.00, 2438.4 MM FOR 1600-4000 AMPS.
   CONSULT FACTORY FOR AVAILABLE EXTENSION HARNESSES.
7. OPTIONAL ACCESSORY MOUNTING PANEL AND RAILS ARE SUPPLIED ON OPEN TYPE SWITCHES FOR MOUNTING OPTIONAL TIME DELAYS, RELAYS, AND MONITORS.
8. REQUIRED TOP AND BOTTOM ENCLOSURE VENTILATION OPENINGS FOR 1600 THRU 4000 AMP SWITCHES IS 140 SQ. INCHES 903 SQ. CM TOTAL.
9. CUSTOMER SUPPLIED VERTICAL MOUNTING CHANNELS (FOR 1600-4000 AMP) (2) REQUIRED (MINIMUM GAUGE #10)
10. **AN OPERATOR'S MANUAL IS FURNISHED WITH EACH AUTOMATIC TRANSFER SWITCH. REFER TO THIS PUBLICATION PRIOR TO INSTALLATION AND OPERATION OF THE SWITCH.**

DRILL PATTERN BELOW WILL ACCOMMODATE MOST DOOR MOUNTED ACCESSORIES. REFER TO ASCO SUPPLIED ACCESSORY NAMEPLATE DRAWING FOR ACTUAL DOOR DRILLING REQUIREMENTS.

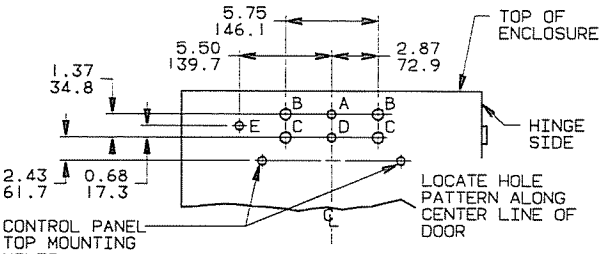

HOLE A-FEAT 5-0.50 DIA, Ø12.7 MM
HOLE B-FEAT 9A & 9B-0.71 DIA, Ø18.0 MM
HOLE C-ACC 9C & 9D-0.71 DIA, Ø18.0 MM
HOLE D-ACC 6A, 6B, OR 6C-0.50 DIA, Ø12.7 MM
HOLE E-ACC 12 OR 16-0.50 DIA, Ø12.7 MM

SIZES OF UL LISTED SOLDERLESS SCREW TYPE TERMINALS FOR EXTERNAL POWER CONNECTIONS

SWITCH RATING (AMPS)	RANGE OF, AL-CU WIRE SIZES
*600-800	THREE #2 AWG TO 600 MCM
* 1000-1200	FOUR #2 AWG TO 600 MCM
1600-4000	SUITABLE FOR BUS BAR

CONTACT FACTORY FOR *BUS CONNECTION DRAWINGS

AMP SIZE	SUGGESTED BOLT SIZE FOR MOUNTING ATS
600 & 800	3/8-16 X 1 1/2 INCH LG MINIMUM QTY. (8)
1000 & 1200	3/8-16 X 1 1/4 INCH LG MINIMUM QTY (4)
1600 TO 4000	3/8-16 X 3 INCH LG MINIMUM QTY. (8)

COMPUTER GENERATED DRAWING

INCHES / MM

THIRD ANGLE PROJECTION

CATALOG NO. CERTIFIED
TO ASCO ® S. O.
DATE BY

Automatic Switch Co.©
FflorHam Park, New Jersey, 07932
PRINTED IN U.S.A.

	BY	DATE
DRAWN	FDN	11/88
CHECKED	NS	11/88
DFTG APVL	NS	11/88
ENGR APVL	FM	11/88

PROPERTY OF AUTOMATIC SWITCH CO. USE PERMITTED FOR OUR WORK ONLY. ALL RIGHTS OF DESIGN OR INVENTION ARE RESERVED.

☒ AL	☒ AP	☒ CE	☒ AS	☒ AN
☒ AD	☐ AA	☐	☐	☐

COMPOSITE OUTLINE AND MOUNTING DIMENSIONS FOR OPEN TYPE 600 THROUGH 4000 AMPERE ASCO ® 940 AUTOMATIC TRANSFER SWITCHES 2 & 3 POLE WITHOUT ACC. 28 OVERLAPPING NEUTRAL TRANSFER CONTACT

ER NO	ITEM CHGD	CHG	DATE	APVL
111214	UPDATED		5/91	PB
107077	ISSUED	-	11/88	FM

JS 401951

CHG LTR: A

600 THRU 800 AMP

AMP SIZE	DIMENSIONS							
	A	B	C	D	E	F	G	H
600 & 800	22.75 577.8	25.00 635.0	11.00 279.4	21.87 555.5	0.43 10.9	7.50 190.5	1.25 31.8	6.87 174.5
1000 & 1200	25.00 635.0	30.00 762.0	13.00 330.2	24.25 616.0	0.37 9.4	31.25 793.8	0.62 15.7	3.06 77.7

AMP SIZE	DIMENSIONS							
	J	K	L	M	N	P	R	S
600 & 800	3.50 88.9	1.75 44.5	0.50 Ø12.7	—	—	—	—	—
1000 & 1200	4.28 108.7	5.06 128.5	0.43 Ø10.9	11.93 303.0	32.50 825.5	2.34 59.5	3.19 81.0	12.59 319.8

AMP SIZE	DIMENSIONS								
	T	U	V	W	X	Y	Z	AA	BB
600 & 800	5.12 130.0	—	—	3.50 88.9	—	—	—	—	—
1000 & 1200	—	2.62 66.5	2.25 57.2	3.68 93.5	10.19 258.8	2.62 66.5	1.37 34.8	11.31 287.3	8.25 209.5

APPROXIMATE SHIPPING WEIGHT, LBS (KG) (WEIGHT INCLUDES STANDARD TRANSFER SWITCH & CONTROLS)				
AMPERES	POLES	WEIGHT	POLES	WEIGHT
600 800	2	145 (66)	3	155 (71)
1000-1200	2	320 (145)	3	340 (155)
1600-2000	2	385 (175)	3	410 (186)
3000	2	850 (386)	3	1000 (454)
4000	2	1000 (454)	3	1300 (590)

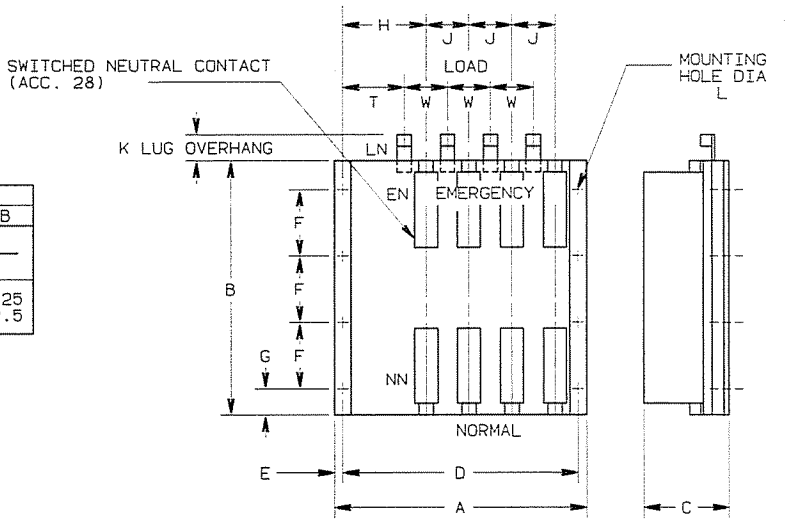

1600 THRU 4000 AMP

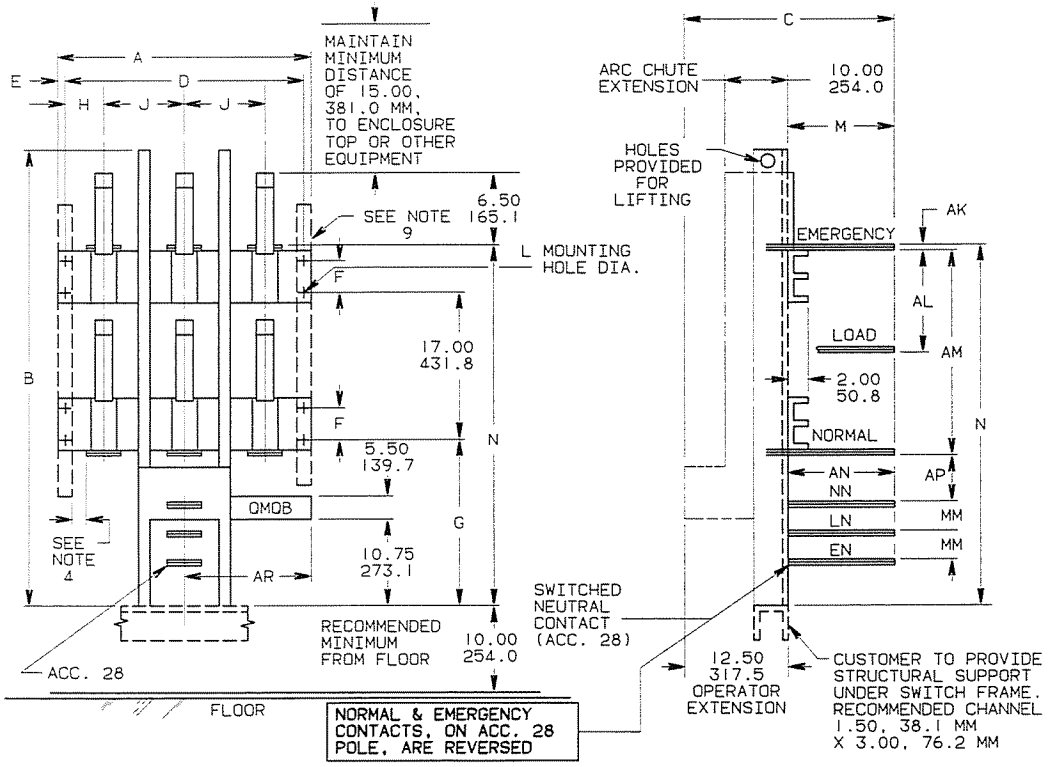

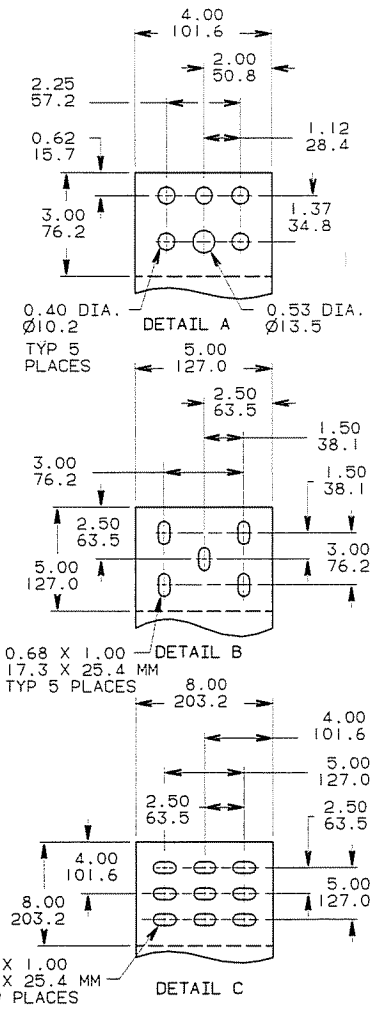

AMP SIZE	DIMENSIONS								
	A	B	C	D	E	F	G	H	J
1600 & 2000	28.50 723.9	52.00 1320.8	18.50 469.9	27.00 685.8	0.75 19.1	4.37 111.0	20.65 524.5	4.50 114.3	9.00 228.6
3000	31.50 800.1	52.00 1320.8	22.50 571.5	30.00 762.0	0.75 19.1	4.37 111.0	20.65 524.5	5.00 127.0	10.00 254.0
4000	41.00 1041.4	52.00 1320.8	25.50 647.7	39.00 990.6	1.00 25.4	4.37 111.0	20.65 524.5	6.50 165.1	13.00 330.2

AMP SIZE	DIMENSIONS									
	L	M	N	AK	AL	AM	AN	AP	AR	MM
1600 & 2000	0.40 Ø10.2	6.00 152.4	43.46 1103.9	0.50 12.7	11.62 295.1	23.75 603.3	6.00 152.4	7.65 194.3	—	4.12 104.6
3000	0.40 Ø10.2	10.00 254.0	43.71 1110.4	0.75 19.1	11.75 298.5	24.00 609.6	10.00 254.0	7.15 181.6	20.50 520.7	4.25 107.9
4000	0.40 Ø10.2	13.00 330.2	43.71 1110.4	0.75 19.1	11.75 298.5	24.00 609.6	13.00 330.2	7.15 181.6	19.50 495.3	4.25 107.9

AMP SIZE	BUS BAR PER PHASE BOLTING SURFACE
1600 & 2000	TWO 0.25 X 4.00, 6.4 X 101.6 MM SEE DETAIL "A"
3000	TWO 0.37 X 5.00, 9.4 X 127.0 MM SEE DETAIL "B"
4000	TWO 0.37 X 8.00, 9.4 X 203.2 MM SEE DETAIL "C"

1000 THRU 1200 AMP

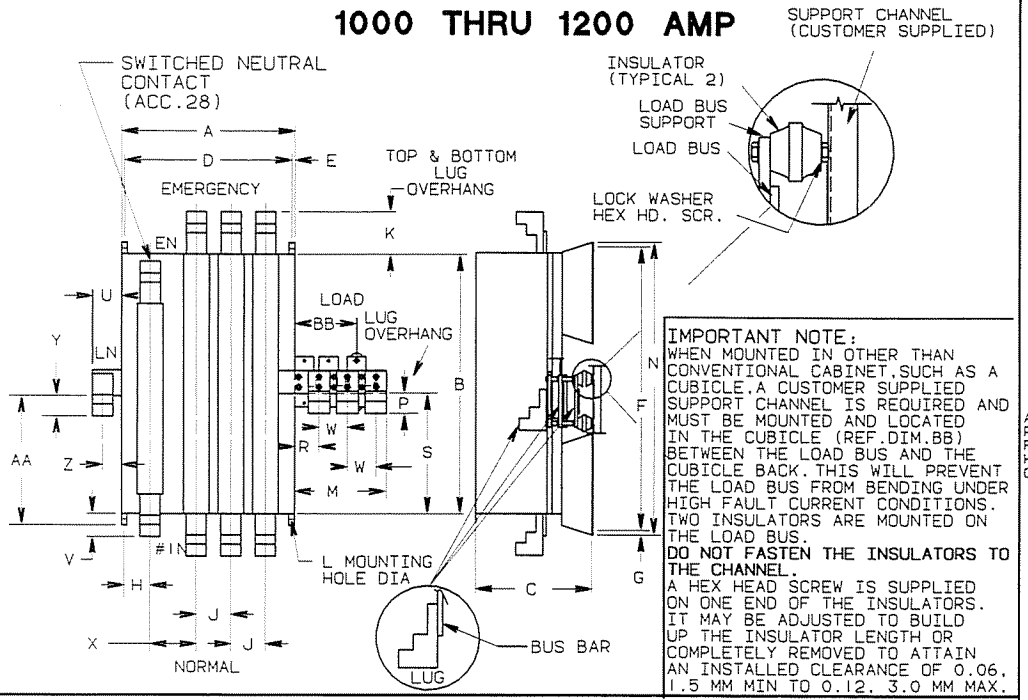

IMPORTANT NOTE:
WHEN MOUNTED IN OTHER THAN CONVENTIONAL CABINET, SUCH AS A CUBICLE, A CUSTOMER SUPPLIED SUPPORT CHANNEL IS REQUIRED AND MUST BE MOUNTED AND LOCATED IN THE CUBICLE (REF. DIM. BB) BETWEEN THE LOAD BUS AND THE CUBICLE BACK. THIS WILL PREVENT THE LOAD BUS FROM BENDING UNDER HIGH FAULT CURRENT CONDITIONS. TWO INSULATORS ARE MOUNTED ON THE LOAD BUS.
DO NOT FASTEN THE INSULATORS TO THE CHANNEL.
A HEX HEAD SCREW IS SUPPLIED ON ONE END OF THE INSULATORS. IT MAY BE ADJUSTED TO BUILD UP THE INSULATOR LENGTH OR COMPLETELY REMOVED TO ATTAIN AN INSTALLED CLEARANCE OF 0.06, 1.5 MM MIN TO 0.12, 3.0 MM MAX.

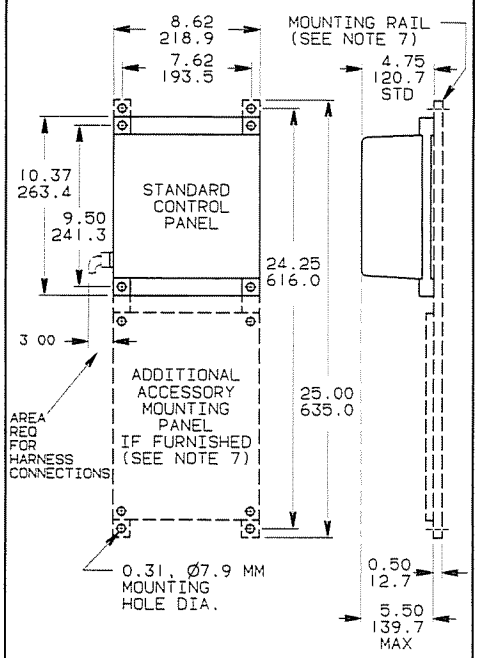

STANDARD CONTROL PANEL
WITH ADDITIONAL ACCESSORY MOUNTING PANEL AND CHANNELS USED WITH ANY SIZE TRANSFER SWITCH UNIT

SUGGESTED BOLT SIZE FOR MOUNTING CONTROLS: 1/4-20 X 1 1/2 INCH SELF CLINCHING CAPTIVE STUDS AS REQUIRED.

GENERAL NOTES

1. FOR TWO POLE SWITCHES, OMIT CENTER POLE.
2. WHEN INSTALLING, CONNECT NORMAL , EMERGENCCY , AND LOAD CONDUCTORS TO SIMILARLY MARKED TERMINALS.
3. ALL INTERNAL CONNECTIONS ARE MADE AT THE FACTORY.
4. MAINTAIN ELECTRICAL CLEARANCE OF 1.00, 25.4 MM. MINIMUM BETWEEN LIVE METAL PARTS AND GROUNDED METAL.
5. WHEN OPEN TYPE ATS'S ARE INTENDED FOR ENCLOSURE TYPE MOUNTING BY OTHERS, MOUNT THE TRANSFER SWITCH UNIT ON THE INSIDE BACK SURFACE AND THE CONTROL PANEL(S) ON THE INSIDE DOOR SURFACE.
6. THE CONTROL PANEL IS CONNECTED TO THE TRANSFER SWITCH PANEL BY A WIRE HARNESS WITH A QUICK DISCONNECT PLUG. HARNESS LENGTH IS - 50.00, 1270.0 MM FOR 600-800 AMPS, 60.00, 1524.0 MM FOR 1000-1200 AMPS, AND 96.00, 2438.4 MM FOR 1600-4000 AMPS.
   CONSULT FACTORY FOR AVAILABLE EXTENSION HARNESSES.
7. OPTIONAL ACCESSORY MOUNTING PANEL AND RAILS ARE SUPPLIED ON OPEN TYPE SWITCHES FOR MOUNTING OPTIONAL TIME DELAYS, RELAYS, AND MONITORS.
8. REQUIRED TOP AND BOTTOM ENCLOSURE VENTILATION OPENINGS FOR 1600 THRU 4000 AMP SWITCHES IS 140 SQ. INCHES 903 SQ. CM TOTAL.
9. CUSTOMER SUPPLIED VERTICAL MOUNTING CHANNELS (FOR 1600-4000 AMP) (2) REQUIRED (MINIMUM GAUGE #10)
10. **AN OPERATOR'S MANUAL IS FURNISHED WITH EACH AUTOMATIC TRANSFER SWITCH. REFER TO THIS PUBLICATION PRIOR TO INSTALLATION AND OPERATION OF THE SWITCH.**

DRILL PATTERN BELOW WILL ACCOMODATE MOST DOOR MOUNTED ACCESSORIES. REFER TO ASCO SUPPLIED ACCESSORY NAMEPLATE DRAWING FOR ACTUAL DOOR DRILLING REQUIREMENTS.

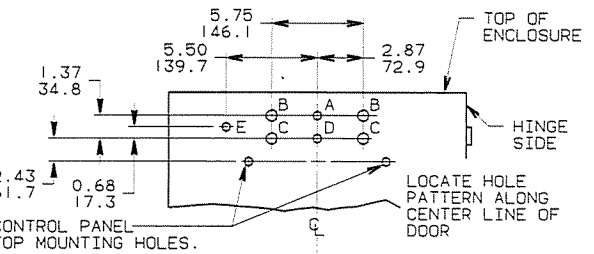

HOLE A-FEAT 5-0.50 DIA, Ø12.7 MM
HOLE B-FEAT 9A & 9B-0.71 DIA, Ø18.0 MM
HOLE C-ACC 9C & 9D-0.71 DIA, Ø18.0 MM
HOLE D-ACC 6A, 6B, OR 6C-0.50 DIA, Ø12.7 MM
HOLE E-ACC 12 OR 16-0.50 DIA, Ø12.7 MM

SIZES OF UL LISTED SOLDERLESS SCREW TYPE TERMINALS FOR EXTERNAL POWER CONNECTIONS

SWITCH RATING (AMPS)	RANGE OF AL-CU WIRE SIZES
* 600-800	THREE #2 AWG TO 600 MCM
* 1000-1200	FOUR #2 AWG TO 600 MCM
1600-4000	SUITABLE FOR BUS BAR

* CONTACT FACTORY FOR BUS CONNECTION DRAWINGS

AMP SIZE	SUGGESTED BOLT SIZE FOR MOUNTING ATS
600 & 800	3/8-16 X 1 1/2 INCH LG MINIMUM QTY (8)
1000 & 1200	3/8-16 X 1 1/4 INCH LG MINIMUM QTY (4)
1600 TO 4000	3/8-16 X 3 INCH LG MINIMUM QTY (8)

COMPUTER GENERATED DRAWING

INCHES / MM

THIRD ANGLE PROJECTION

CATALOG NO. _____ CERTIFIED
TO ASCO S. O. _____
DATE _____ BY _____

Automatic Switch Co.
FLORHAM PARK, NEW JERSEY, 07932
PRINTED IN U S A

	BY	DATE
DRAWN	CC	8/90
CHECKED	BM	8/90
DFTG APVL	BM	8/90
ENGR APVL	FM	8/90

PROPERTY OF AUTOMATIC SWITCH CO
USE PERMITTED FOR OUR WORK ONLY
ALL RIGHTS OF DESIGN OR INVENTION ARE RESERVED

☒ AL	☒ AP	☒ CE	☒ AS	☒ AN
☒ AD	☐ AA	☐	☐	☐

COMPOSITE OUTLINE AND MOUNTING DIMENSIONS FOR OPEN TYPE 600 THROUGH 4000 AMPERE ASCO® 940 AUTOMATIC TRANSFER SWITCHES 2 & 3 POLE WITH ACC. 28 OVERLAPPING NEUTRAL TRANSFER CONTACT

ER NO	ITEM CHGD	CHG	DATE	APVL
132920	SEE ECN	E	1/95	FM
111214	UPDATED	D	5/91	PB
110272	SEE ECN	C	9/89	FM
109279	1600ACC28	B	6/89	PDG
109119	HOLE C	A	6/89	FM
107077	ISSUED	-	11/88	FM

JS 401952

CHG LTR E

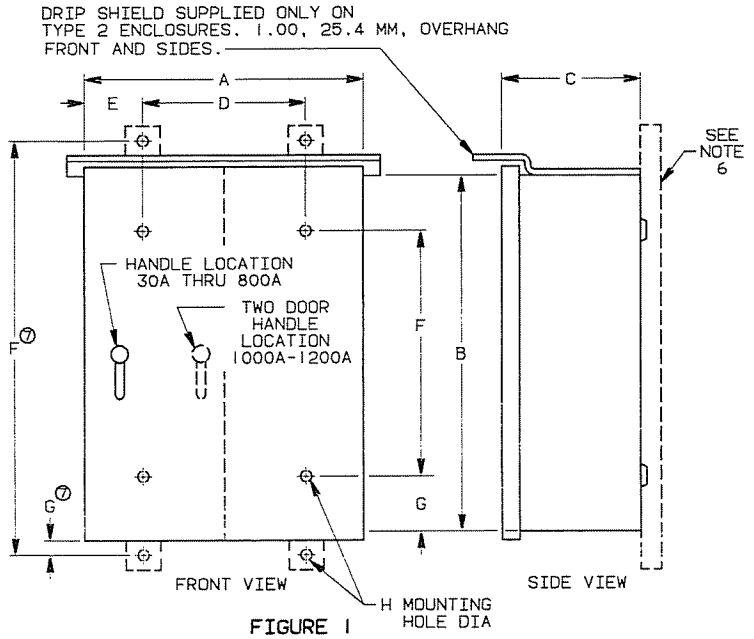

FIGURE 1

NOTES

NOTES - ① ② ③ ④ ⑤ ⑥ TYPE 1

NOTES - ① ② ③ ④ TYPE 2

1. REMOVABLE DOORS, KEY LOCKING HANDLE. SINGLE DOOR HINGED ON RIGHT SIDE WITH SINGLE CENTER LATCH AND CAPTIVE SCREWS ON TOP AND BOTTOM FOR 30 THRU 800 AMPS. TWO DOOR WITH 3 POINT LATCH ON 1000 THRU 1200 AMPS.
2. FULL WIRING GUTTERS AND 0.75-0.50 DIA, Ø19.1-Ø12.7 MM, COMBINATION PILOT KNOCKOUTS PROVIDED TOP AND BOTTOM ONLY.
3. TYPE 1 CAN BE SUPPLIED WITH GASKETING TO PROVIDE A DUST SEAL.
4. FLUSH MOUNTED TYPES HAVE REMOVABLE FLUSH DOOR AND TRIM. TRIM OVERLAPS 1.00, 25.4 MM, ON ALL SIDES.
5. ADD 3.00, 76.2 MM, FOR FLUSH MOUNTED ENCLOSURES.
6. EXTERNAL MOUNTING CHANNELS WITH MOUNTING HOLES FOR 1000-1200 AMPS ONLY. (SHOWN DASHED)
7. TYPE 2 ENCLOSURES ARE PROVIDED WITH A TOP MOUNTED DRIP SHIELD THAT EXTENDS BEYOND THE FRONT AND SIDES OF THE ENCLOSURE. PILOT KNOCKOUT PROVIDED IN BOTTOM ONLY.

TYPE 1 AND 2 ENCLOSURES FOR AUTOMATIC TRANSFER SWITCHES WITHOUT OPTIONAL ACC. 28 OVERLAPPING NEUTRAL TRANSFER CONTACT

AMP SIZE	FIG NO	DIMENSIONS A	B	C	D	E	F
30,70, 100,150	1	17.50 ⑤ 444.5	31.00 ⑤ 787.4	11.62 295.1	14.50 368.3	1.50 38.1	[illegible]
260 & 400	1	18.00 ⑤ 457.2	48.00 ⑤ 1219.2	13.00 330.2	15.00 381.0	1.50 38.1	[illegible] 1143.0
600 & 800	1	24.00 609.6	63.00 1600.2	17.50 444.5	21.00 533.4	1.50 38.1	60.00 1524.0
1000 & 1200	1	36.00 914.4	79.00 2006.6	19.50 495.3	32.25 818.2	1.87 47.5	82.00 ⑥ 2082.8
1600 & 2000	2	34.00 863.6	91.00 2311.4	60.00 1524.0	54.00 1371.6	3.00 76.2	28.00 711.2
3000	2	37.00 939.8	91.00 2311.4	60.00 1524.0	54.00 1371.6	3.00 76.2	31.00 787.4
4000	2	46.00 1676.4	91.00 2311.4	72.00 1828.8	66.00 1676.4	3.00 76.2	42.00 1066.8

		G	H
30,70 100,150	1	1.50 38.1	0.37 Ø9.4
260 & 400	1	1.50 38.1	0.37 Ø9.4
600 & 800	1	1.50 38.1	0.37 Ø9.4
1000 & 1200	1	1.50 ⑤ 38.1	0.68 Ø17.3
1600 - 4000	2	3.00 76.2	.625 Ø15.8

TYPE 1 AND 2 ENCLOSURES FOR AUTOMATIC TRANSFER SWITCHES WITH OPTIONAL ACC. 28 OVERLAPPING NEUTRAL TRANSFER CONTACT

AMP SIZE	FIG NO	DIMENSIONS A	B	C	D	E	F
30,70, 100,150	1	17.50 ⑤ 444.5	31.00 ⑤ 787.4	11.62 295.1	14.50 368.3	1.50 38.1	28.00 711.2
260 & 400	1	18.00 ⑤ 457.2	48.00 ⑤ 1219.2	13.00 330.2	15.00 381.0	1.50 38.1	45.00 1143.0
600 & 800	1	30.00 762.0	63.00 1600.2	17.50 444.5	27.00 685.8	1.50 38.1	60.00 1524.0
1000 & 1200	1	44.00 1117.6	79.00 2006.6	19.50 495.3	33.75 857.3	5.12 130.0	82.00 ⑥ 2082.8
1600 & 2000	2	34.00 863.6	91.00 2311.4	60.00 1524.0	54.00 1371.6	3.00 76.2	28.00 [illegible]
3000	2	37.00 939.8	91.00 2311.4	60.00 1524.0	54.00 1371.6	3.00 76.2	[illegible]
4000	2	46.00 1676.4	91.00 2311.4	72.00 1828.8	66.00 1676.4	3.00 76.2	42.00 1066.8

		G	H
30,70, 100,150	1	1.50 38.1	0.37 Ø9.4
260 & 400	1	1.50 38.1	0.37 Ø9.4
600 & 800	1	1.50 38.1	0.37 Ø9.4
1000 & 1200	1	1.50 ⑥ 38.1	0.68 Ø17.3
1600 - 4000	2	3.00 76.2	.625 Ø15.8

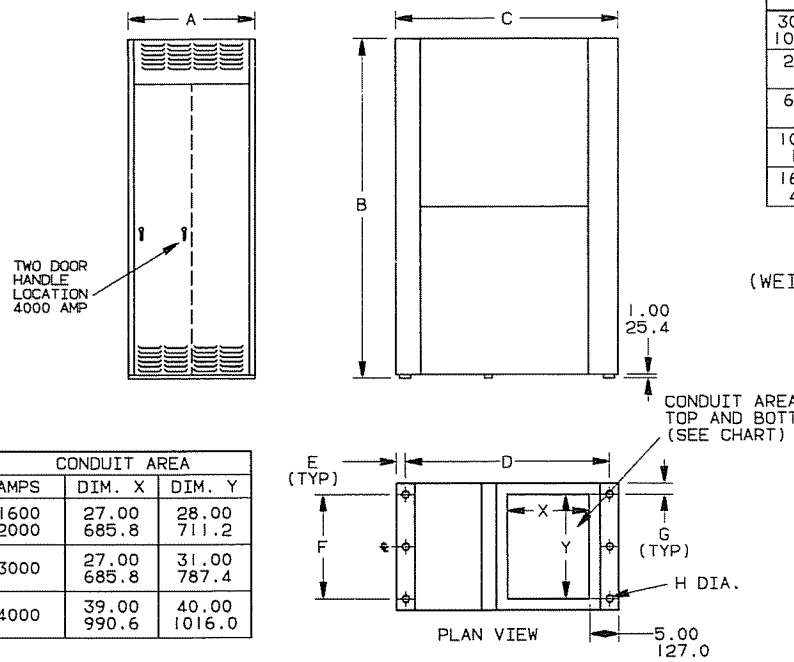

CONDUIT AREA		
AMPS	DIM. X	DIM. Y
1600 2000	27.00 685.8	28.00 711.2
3000	27.00 685.8	31.00 787.4
4000	39.00 990.6	40.00 1016.0

FIGURE 2

NOTES

1. TYPE 1 FREE STANDING, FLOOR SUPPORTED, FRAME CONSTRUCTION.
2. REMOVEABLE PAN TYPE DOORS, LEVER TYPE KEY LOCKING HANDLE WITH SINGLE CENTER LATCH & CAPTIVE SCREWS ON TOP & BOTTOM. SINGLE DOOR HINGED ON RIGHT FOR 1600-3000 AMP. TWO DOOR FOR 4000 AMP.
3. VENTILATED FRONT AND BACK, VENTS TOP AND BOTTOM.
4. CABLE SUPPORT BRACKETS SUPPLIED WITH ENCLOSURE.

APPROXIMATE SHIPPING WEIGHT, LBS (KG)
(WEIGHT INCLUDES STANDARD TRANSFER SWITCH & CONTROLS)

AMP SIZE	POLES	WEIGHT TYPES 1 & 2	TYPES 3R,4 & 12
30, 70 & 100	2	67 (31)	82 (37)
	3	70 (32)	85 (38)
	3 W/ACC.28	73 (33)	88 (40)
150	2	69 (32)	84 (38)
	3	72 (33)	87 (39)
	3 W/ACC.28	75 (34)	90 (41)
260 & 400	2	117 (53)	132 (60)
	3	125 (57)	140 (63)
	3 W/ACC.28	133 (61)	148 (67)
600 & 800	2	250 (114)	250 (114)
	3	260 (118)	260 (118)
	3 W/ACC.28	320 (145)	320 (145)
1000 & 1200	2	630 (286)	630 (286)
	3	650 (295)	650 (295)
	3 W/ACC.28	740 (336)	740 (336)
1600 & 2000	2	1070 (486)	CONSULT FACTOR
	3	1090 (495)	CONSULT FACTOR
	3 W/ACC.28	1115 (506)	CONSULT FACTORY
3000	2	2000 (908)	CONSULT FACTORY
	3	2150 (976)	CONSULT FACTORY
	3 W/ACC.28	2230 (1012)	CONSULT FACTORY
4000	2	2360 (1071)	CONSULT FACTORY
	3	2580 (1171)	CONSULT FACTORY
	3 W/ACC.28	2680 (1217)	CONSULT FACTORY

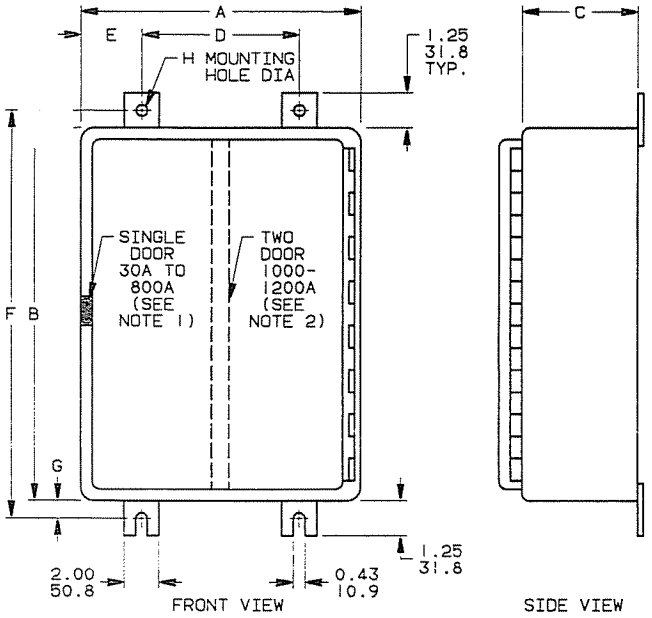

FIGURE 3

NOTES

TYPE 3R TYPE 4 TYPE 12

1. SINGLE DOOR HINGED ON RIGHT SIDE WITH PADLOCK HASP. PLATED DOOR CLAMPS ON THREE (3) SIDES FOR TYPE 4, AND ONE (1) SIDE FOR TYPE 3R & 12. (30A TO 800A)
2. TWO DOOR TYPE 4 ENCLOSURES HAVE REMOVABLE CENTER POST INSTALLED BETWEEN DOORS WITH DOOR CLAMPS ON THREE SIDES OF EACH DOOR. TWO DOOR TYPE 3R & 12 ENCLOSURES HAVE 3-POINT LATCHING WITH KEYLOCKING HANDLE. (1000-1200 A)
3. 'LL WIRING GUTTERS PROVIDED TOP AND BOTTOM.
4. KNOCKOUTS PROVIDED

TYPE 3R,4, AND 12 ENCLOSURES FOR AUTOMATIC TRANSFER SWITCHES WITHOUT OPTIONAL ACC. 28 OVERLAPPING NEUTRAL TRANSFER CONTACT

AMP SIZE	FIG NO	DIMENSIONS A	B	C	D	E	F
30,70, 100,150	3	17.50 444.5	32.50 825.5	11.62 295.1	11.50 292.1	3.00 76.2	33.75 857.3
260 & 400		18.00 457.2	48.00 1219.2	13.00 330.2	12.00 304.8	3.00 76.2	49.25 1251.0
600 & 800		24.00 609.6	63.00 1600.2	17.50 444.5	18.00 457.2	3.00 76.2	64.25 1632.0
1000 & 1200		36.00 914.4	79.00 2006.6	19.50 459.3	30.00 762.0	3.00 76.2	80.25 2038.4
1600 & 2000		CONSULT FACTORY					
3000 & 4000							

	FIG NO	G	H				
30,70, 100,150	3	0.62 15.7	0.43 Ø10.9				
260 & 400		0.62 15.7	0.43 Ø10.9				
600 & 800		0.62 15.7	0.43 Ø10.9				
1000 & 1200		0.62 15.7	0.43 Ø10.9				
1600 & 2000		CONSULT FACTORY					
3000 & 4000							

TYPE 3R,4, AND 12 ENCLOSURES FOR AUTOMATIC TRANSFER SWITCHES WITH OPTIONAL ACC. 28 OVERLAPPING NEUTRAL TRANSFER CONTACT

AMP SIZE	FIG NO	DIMENSIONS A	B	C	D	E	F
30,70, 100,150	3	17.50 444.5	32.50 825.5	11.62 295.1	11.50 292.1	3.00 76.2	33.75 857.3
260 & 400		18.00 457.2	48.00 1219.2	13.00 330.2	12.00 304.8	3.00 76.2	49.25 1251.0
600 & 800		30.00 762.0	63.00 1600.2	17.50 444.5	24.00 609.6	3.00 76.2	64.25 1632.0
1000 & 1200		44.00 1117.6	79.00 2006.6	19.50 459.3	38.00 965.2	3.00 76.2	80.25 2038.4
1600 & 2000		CONSULT FACTORY					
3000 & 4000							

	FIG NO	G	H				
30,70, 100,150	3	0.62 15.7	0.43 Ø10.9				
260 & 400		0.62 15.7	0.43 Ø10.9				
600 & 800		0.62 15.7	0.43 Ø10.9				
1000 & 1200		0.62 15.7	0.43 Ø10.9				
1600 & 2000		CONSULT FACTORY					
3000 & 4000							

GENERAL NOTES

(FIGURES 1,2, & 3)

1. ENCLOSURES CONSTRUCTED IN ACCORDANCE WITH UL STANDARD 508, OR UL 50.
2. STANDARD FINISH-LIGHT GREY ANSI #61.
3. WIDTH, HEIGHT, AND DEPTH DIMENSIONS ON FIG. 1 ARE INSIDE DIMENSIONS. WIDTH, HEIGHT, AND DEPTH DIMENSIONS ON FIG 2 & 3 ARE OUTSIDE DIMENSIONS.
4. THE TRANSFER SWITCH UNIT IS MOUNTED ON THE INSIDE BACK SURFACE AND THE ACCESSORY CONTROL PANEL MOUNTED ON THE INSIDE DOOR SURFACE. THE CONTROL PANEL IS CONNECTED TO THE TRANSFER SWITCH PANEL BY A WIRE HARNESS WITH A QUICK DISCONNECT PLUG.
5. **AN OPERATOR'S MANUAL IS FURNISHED WITH EACH AUTOMATIC TRANSFER SWITCH. REFER TO THIS PUBLICATION PRIOR TO INSTALLATION AND OPERATION OF THE SWITCH.**

SIZES OF UL LISTED SOLDERLESS SCREW TYPE TERMINALS FOR EXTERNAL POWER CONNECTIONS

SWITCH RATING (AMPS)	RANGE OF AL-CU WIRE SIZES
30	ONE #14 TO #6 AWG
70	ONE #14 TO 1/0 AWG
100	ONE #14 TO 2/0 AWG
150	ONE #8 TO 3/0 AWG
260-400	TWO #1/0 AWG TO 250 MCM OR ONE #4 AWG TO 600 MCM
600-800	THREE #2 AWG TO 600 MCM
1000-1200	FOUR #2 AWG TO 600 MCM
1600-4000	SUITABLE FOR BUS BAR

INCHES MM

THIRD ANGLE PROJECTION

CATALOG NO. CERTIFIED

TO ASCO ® S. O. _____

DATE _____ BY _____

COMPUTER GENERATED DRAWING

Automatic Switch Co.©

FLORHAM PARK, NEW JERSEY, 07932

PRINTED IN U.S.A.

	BY	DATE
DRAWN	FDN	11/88
CHECKED	NS	11/88
DFTG APVL	NS	11/88
ENGR APVL	FM	11/88

PROPERTY OF AUTOMATIC SWITCH CO. USE PERMITTED FOR OUR WORK ONLY. ALL RIGHTS OF DESIGN OR INVENTION ARE RESERVED.

☒ AL	☒ AP	☒ CE	☒ AS	☒ AN
☒ AD	☐ AA	☐	☐	☐

COMPOSITE ENCLOSURE OUTLINE AND MOUNTING DIAGRAM FOR 2 OR 3 POLE 30 THROUGH 4000 AMPERES ASCO ® 940 AUTOMATIC TRANSFER SWITCHES AND 386 NON-AUTOMATIC TRANSFER SWITCHES

ER NO	ITEM CHGD	CHG	DATE	APVL
122827	SEE ECN	A	9/92	FM
107077	ISSUED	-	11/88	FM

JS 401953

CHG LTR A

ASCO CERTIFIED SERVICE CENTERS 1/2/96

ALABAMA

Generator Service Co.
Hueytown, AL 35023
1-205-744-7572

ARIZONA

CEI Electrical Service & Testing
Phoenix, AZ 85017
1-602-272-6161

ASCO Services, Inc.
Yorba Linda, CA 92687
1-714-283-4006

ARKANSAS

Cleveland Electric Co.
Little Rock, AR 72219
1-501-565-7561

CALIFORNIA

ASCO Services, Inc.
Stockton, CA 95203
1-209-941-4111

ASCO Services, Inc.
Pleasanton, CA 94566
1-510-484-2250

ASCO Services, Inc.
Yorba Linda, CA 92687
1-714-283-4006

COLORADO

ASCO Services, Inc.
Denver, CO 80221
1-303-292-8235.

Electro Test Inc.
Denver, CO 80221
1-303-427-8809

CONNECTICUT

Northeast Testing Inc.
Wallingford, CT 06492
1-203-949-2650

DELAWARE

ASCO Services, Inc.
Marlton, NJ 08034
1-609-985-8700

FLORIDA

ASCO Services, Inc.

Longwood, FL 32779
1-407-774-4565

Tampa Armature Works
Tampa, FL 33619
1-813-621-5661

GEORGIA

ASCO Services, Inc.

Atlanta, GA 30328
1-770-698-0728

Cleveland Electric Co.
1-404-696-4550

HAWAII

ASCO Services, Inc.
Yorba Linda, CA 92687
1-714-283-4006

ILLINOIS

ASCO Services, Inc.
Hazelwood, MO 63042
1-314-895-8777

Oakley Services Inc.
Okawville, IL 62271
1-618-243-5348

Switching Systems Inc.
Oak Park, IL 60304
1-708-386-6668

INDIANA

High Voltage Maintenance
Indianapolis, IN 46237
1-317-887-6133

Electrical Power Maintenance
Indianapolis, IN 46268
1-800-355-1503

KENTUCKY

ASCO Services, Inc.
Hazelwood, MO 63042
1-314-895-8777

Electrical Power Maintenance
Indianapolis, IN 46268
1-800-355-1503

High Voltage Maintenance
Erlanger, KY 41018
1-606-371-5355

LOUISIANA

Electrical Equipment Repairs
Baton Rouge, LA 70815
1-504-929-7515

MAINE

ASCO Services, Inc.
Marlboro, MA 01752
1-508-624-0466

Electrical Testing & Mainten. Co.
Hanson, MA 02341
1-617-447-0068

MARYLAND

ASCO Services, Inc.
Beltsville, MD
1-301-595-2700

MET Electrical Testing
Columbia, MD 21045-4760
1-410-354-2200

MASSACHUSETTS

ASCO Services, Inc.
Marlboro, MA 01752
1-508-624-0466

Electrical Testing & Mainten. Co.
Hanson, MA 02341
1-617-447-0068

MICHIGAN

Northern Electrical Testing
Troy, MI 48083-2236
1-810-689-8980

MINNESOTA

ASCO Services, Inc.
Eden Prairie, MN 55346
1-612-949-9039

MISSISSIPPI

Control Systems Inc.
Jackson, MS 39202
1-601-355-8594

MISSOURI

ASCO Services, Inc.
Hazelwood, MO 63042
1-314-895-8777

A/C Control Manufacturing
Kansas City, MO 64127
1-816-231-6400

NEBRASKA

Process Measurement Co.
Omaha, NE 68117
1-402-734-2434

NEVADA

ASCO Services, Inc.
Pleasanton, CA 94566
1-510-484-2250

ASCO Services, Inc.
Yorba Linda, CA 92687
1-714-283-4006

NEW HAMPSHIRE

ASCO Services, Inc.
Marlboro, MA 01752
1-508-624-0466

NEW JERSEY

ASCO Services Inc.
Florham Park, NJ 07932
1-201-966-2070

ASCO Services, Inc.
Marlton, NJ 08034
1-609-985-8700

Switching Systems Inc.
E. Hanover, NJ 07936
1-201-402-2350

NEW MEXICO

ASCO Services, Inc.
Yorba Linda, CA 92687
1-714-283-4006

Electro Test Inc.
Albuqerque, NM 87113
1-505-822-0237

NEW YORK

ASCO Services Inc.
See New Jersey

NORTH CAROLINA

Automated Power Service
Charlotte, NC 28217
1-800-476-3054 - 24 Hr.

OHIO

ASCO Services, Inc.
Dublin, OH 43017
1-614-791-8900

High Voltage Maintenance
Dayton, OH 45413
1-513-278-0811

High Voltage Maintenance
Mentor, OH 44060
1-216-951-2706

Mid-State Generator Service
Columbus, OH 43228
1-614-870-9000

OKLAHOMA

Lloyd T. Gibbs Co.
Tulsa, OK 74120
1-918-585-5703

OREGON

ASCO Services, Inc.
Redmond, WA 98052
1-206-224-2927.

PENNSYLVANIA

ASCO Services, Inc.
Pittsburgh, PA 15235
1-412-243-5570

ASCO Services, Inc.
Marlton, NJ 08034
1-609-985-8700

G D S Control System
Dover, PA 17315
1-717-292-9403

RHODE ISLAND

ASCO Services, Inc.
Marlboro, MA 01752
1-508-624-0466

SOUTH CAROLINA

Automated Power Service
Charlotte, NC 28217
1-800-476-3054 - 24 Hr.

ASCO Services, Inc.

Atlanta, GA 30328
1-404-698-0728

TENNESSEE

Nixon Power Services Co.
Nashville, TN 37210
1-615-244-0650

TEXAS

ASCO Services, Inc.
Houston, TX 77079
1-713-531-4200

SHERMCO Industries Inc.
Dallas, TX 75220
1-214-358-4271

Sabre Electric Co.
Houston, TX 77043
1-713-984-2761

VERMONT

Southworth Milton Inc.
Montpelier, VT 05602
1-802-223-2356

VIRGINIA

ASCO Services, Inc.
Beltsville, MD
1-301-595-2700

Mid-Atlantic Power Specialists
Sterling, VA 20166
1-703-471-9773

Generator Service Co.
Kents Store, VA 23084
1-804-589-2415

WASHINGTON

ASCO Services, Inc.
Redmond, WA 98052
1-206-224-2927.

WISCONSIN

Arthur Dietrich Co. Inc.
Cudahy, WI 53110-2851
1-414-747-0200

High Voltage Maintenance
New Berlin, WI 53151
1-414-784-3660

Switching Systems
Brookfield, WI 53005
1-800-462-8216

PUERTO RICO

Phasor Engineering, Inc.
Ponce, PR 00732
1-809-844-9366

BERMUDA

Diesel Generators Ltd
Crawl CRBX, Bermuda
1-809-293-0984

24 Hour Emergency Service - - 1-800-800-ASCO

ASCO® Sales Organization

ELECTRICAL CONTROLS

UNITED STATES

ALABAMA
Refer to Georgia

ALASKA
Refer to Washington

ARKANSAS
Refer to Oklahoma

ARIZONA
Automatic Switch Co.
28601 N. 57th Pl.
Cave Creek, Arizona 85331
Tel./Fax: 1-602-585-7238

CALIFORNIA (Northern)
Sierra Sales Engineering, Inc.
5690 Sonoma Drive
Pleasanton, California 94566
Tel. 1-510-484-2250
Fax: 1-510-484-9746

CALIFORNIA (Southern)
Automatic Switch Co.
22765 Savi Ranch Pkwy.
Unit E
Yorba Linda, California 92687
Tel. 1-714-283-4000
Fax: 1-714-283-4010

CONNECTICUT
Refer to Massachusetts

COLORADO
Power Control Products, Inc.
Genesee Center 1, Suite 220
602 Park Point Drive
Golden, Colorado 80401
Tel. 1-303-526-7800
Fax: 1-303-526-7799

DELAWARE
Refer to New Jersey (Southern)

FLORIDA
Automatic Switch Co.
Suite 2112
2180 W. State Road #434
Longwood, Florida 32779
Tel. 1-407-774-4565
Fax: 1-407-774-4590

GEORGIA
Automatic Switch Co.
Suite 100, Bldg. #8
7000 Peachtree-Dunwoody Road
Atlanta, Georgia 30328
Tel. 1-404-698-0728
Fax: 1-404-698-0592

HAWAII
West Pacific Power Products, Inc.
470 N. Nimitz Hwy., Suite 101
Honolulu, Hawaii 96817
Tel. 1-808-523-7014
Fax: 1-808-523-3744

IDAHO
Refer to Colorado

ILLINOIS
Automatic Switch Co.
Northwest Corporate Centre
Suite 1165
2500 W. Higgins Road
Hoffman Estates, Illinois 60195
Tel. 1-708-885-1800
Fax: 1-708-885-0800

INDIANA
C.M. Buck & Associates, Inc.
6850 N. Guion Road
P.O. Box 68510
Indianapolis, Indiana 46268
Tel. 1-317-293-5704
Fax: 1-317-293-0281

IOWA
Refer to Minnesota

KANSAS
Refer to Minnesota

KENTUCKY
Refer to Indiana

LOUISIANA
Refer to Texas

MAINE
Refer to Massachusetts

MARYLAND
Automatic Switch Co.
Suite D, 4740 Corridor Place
Beltsville, Maryland 20705
Tel. 1-301-595-2700 (D.C. Area)
Fax: 1-301-595-2511

MASSACHUSETTS
Automatic Switch Co.
28A Lord Road
Marlboro, Massachusetts 01752
Tel. 1-508-624-0466
Fax: 1-508-624-0773

MICHIGAN
Automatic Switch Co.
Suite 105, 25925 Telegraph Rd.
Southfield, Michigan 48034
Tel. 1-810-356-7760
Fax: 1-810-356-8008

MINNESOTA
Automatic Switch Co.
14500 Martin Blvd.
Eden Prairie, Minnesota 55344
Tel. 1-612-949-9039
Fax: 1-612-949-9034

MISSISSIPPI
Refer to Alabama

MISSOURI
Refer to Illinois

MONTANA
Refer to Colorado

NEBRASKA
Refer to Minnesota

NEVADA (Southeastern)
Refer to Arizona

NEVADA (Western)
Refer to California (Northern)

NEW JERSEY (Northern)
Automatic Switch Co.
Edison Corporate Center
Suite 301, 3090 Woodbridge Ave.
Edison, New Jersey 08837
Tel. 1-908-225-0333
Fax: 1-908-225-0550

NEW JERSEY (Southern)
Automatic Switch Co.
2 Eves Dr., Suite 220
Marlton, NJ 08053
Tel. 1-609-985-8700
Fax: 1-609-985-5030

NEW HAMPSHIRE
Refer to Massachusetts

NEW MEXICO
Refer to Arizona

NEW YORK (Central & Northern)
Refer to Massachusetts

NEW YORK (Metropolitan)
Automatic Switch Co.
Edison Corporate Center
Suite 301, 3090 Woodbridge Ave.
Edison, New Jersey 08837
Tel. 1-212-349-3530
Fax: 1-908-225-0550

NORTH CAROLINA
PL&E Sales, Inc.
6747A Fairview Road
P.O. Box 11996 (28220 -1996)
Charlotte, North Carolina 28210
Tel. 1-704-366-9222
Fax: 1-704-366-9227

PL & E Sales, Inc.
5144 Hicone Road
McLeansville, NC 27301
Tel. 1-910-375-5036
Fax: 1-910-375-5054

NORTH DAKOTA
Refer to Minnesota

OHIO (Northern)
Automatic Switch Co.
Suite 105, 26401 Emery Road
Cleveland, Ohio 44128
Tel. 1-216-360-0366
Fax: 1-216-360-0367

OHIO (Southern)
Automatic Switch Co.
2788 Festival Lane, #108
Dublin, Ohio 43017
Tel. 1-513-381-7661
1-614-791-8900
Fax: 1-614-791-0032

OKLAHOMA
Automatic Engineering, Inc.
1501 E. Sixth Street
Tulsa, Oklahoma 74120
Tel. 1-918-585-5703
Fax: 1-918-585-5707

Automatic Engineering, Inc.
Suite 128, 6051 N. Brookline
P.O. Box 12240 (73157)
Oklahoma City, Oklahoma 73112
Tel. 1-405-848-0180
Fax: 1-405-848-0186

OREGON
Refer to Washington

PENNSYLVANIA (Eastern)
Automatic Switch Co.
2 Eves Dr., Suite 220
Marlton, NJ 08053
Tel. 1-609-985-8700
Fax: 1-609-985-5030

PENNSYLVANIA (Western)
Continental Sales & Engineering Co.
211 Nelson Avenue
P.O. Box 10505
Pittsburgh, Pennsylvania 15235
Tel. 1-412-241-5660
Fax: 1-412-243-1329

PUERTO RICO
M. R. Franceschini, Inc.
Suite 307, 605 Condado Street
San Juan, Puerto Rico 00907-3696
Tel. 1-809-725-7080
Fax: 1-809-721-5762

RHODE ISLAND
Refer to Massachusetts

SOUTH CAROLINA
Refer to North Carolina

SOUTH DAKOTA
Refer to Minnesota

TENNESSEE
Refer to Georgia

TEXAS
Automatic Switch Co.
Suite 108
1155 Dairy Ashford Road
Houston, Texas 77079
Tel. 1-713-531-4200
Fax: 1-713-531-8811

UTAH
Refer to Colorado

VERMONT
Refer to Massachusetts

VIRGINIA
Automatic Switch Co.
Suite 102
Nelson Building
1503 Santa Rosa Road
Richmond, Virginia 23288
Tel. 1-804-282-3521
Fax: 1-804-282-3522

WASHINGTON
S.F. Griggs & Associates
8816 152nd Avenue, N.E.
Redmond, Washington 98052
Tel. 1-206-869-5867
Fax: 1-206-869-9797

WEST VIRGINIA
Refer to Pennsylvania (Western)

WISCONSIN
Refer to Illinois

WYOMING
Refer to Colorado

INTERNATIONAL
MANUFACTURING & MARKETING SUBSIDIARIES:

AUSTRALIA
Main Office:
ASCOMATION PTY., Ltd.
Allambie Grove Business Park
Unit 12/25 Frenchs Forest Road East
Frenchs Forest, N.S.W. 2086
Australia

ASCOMATION (NZ), Ltd.
P.O. Box 12277
Penrose, Auckland
New Zealand

BRAZIL
ASCOVAL Ind. E. Com. Ltda.
(Rodovia Presidente Castelo Branco
Km. 20—Jardim Sta. Cecilia,
06460-030 Barueri, Sao Paulo

CANADA
ASCOLECTRIC Ltd.
P.O. Box 160 (Airport Road)
Brantford, Ontario N3T 5M8

GERMANY
ASCO GmbH & Co.
Voisweg 5C,
D-40878 Ratingen 1

HUNGARY
ASCO Magnesszelep Kft
Mikovinyi S.U. 2-4
H-1037 Budapest

INDIA
ASCO (INDIA) Ltd.
147 Karapakkam Village
Madras 600 096, India

JAPAN
ASCO (JAPAN) CO., Ltd.
89-1 Takahata-cho
Nishinomiya, Hyogo 663

MEXICO
ASCOMATICA S.A. de C.V.
Bosques de Duraznos No. 65-1003A
Fraccionamiento Bosques de Las
Lomas, Delegacion Miguel Hidalgo
Mexico, D.F. CP11700

MIDDLE EAST
ASCOMIDEAST B.V.
P.O. Box 7179, Sharjah
United Arab Emirates

SWEDEN
ASCO AB
Albonoliden 5
S-502 34 Boras

THE NETHERLANDS
ASCO CONTROLS B.V.
(Industrielaan 21) P.O. Box 3
3925 ZG Scherpenzeel (GLD)

UNITED KINGDOM
ASCO (UK)
2 Pit Hey Place, West Pimbo
Skelmersdale, Lancashire
England WN8 9PG

ASIA/FAR EAST
ASCO ASIA
63 Hillview Ave. #03-06
LamSoon Industrial Bldg.
Singapore 2366

Automatic Switch Co. WORLDWIDE HEADQUARTERS:
Florham Park, New Jersey 07932 USA • Telephone Number: N.J. - 1-201-966-2000; N.Y. - 1-212-344-3765; • Telex: 136422 (Domestic) - 219445 (International) - Fax: 1- 201-966-2628
Address List 3425
PRINTED IN U.S.A. **9/95**

A

accessories
- Acc. 6B, 4-4, 5-1
- Acc. 6C, 4-4, 5-1
- Acc. 9C / 9D, 4-4, 5-4
- Acc. 11C, 5-2
- Acc. 14A/14B, 5-4
- Acc. 27, 5-5
- Acc. 30, 4-4
- Acc. 31F, 4-4, 5-6
- Acc. 31M, 4-4, 5-6

add-on panel, 1-1, 5-6

adjustments, 4-1

area protection, see Feature 17, 5-1

auxiliary, 5-4
- circuits, 1-2
- contacts, 5-4

B

battery, plant exerciser, 5-3

bulbs, 3-1

bypass time delay, 4-1

C

cable
- lugs, 1-2
- preparation, 1-2
- spacers, 1-1
  - illustration of, 1-1

catalog number, ii

cleaning, 3-1

commit on transfer, 4-10

connections
- engine control contact, 1-2
- line, 1-1

control panel, 4-1
- adjustments, 4-1
- cover, metal, 4-2
- cover removal, 4-2
- DC power switch, 4-3
- DIP switches, 4-1, 4-3
- disconnecting, 3-1
- factory settings, 4-3
- ground terminal, 1-2
- latches, cover, 4-2
- LED indicators, 4-4
- pushbutton, bypass time delay, 4-3
- sensor adjustment, 4-1
- thumb screws, 4-2
- time delay adjustment, 4-1
- timer, exerciser, 5-2

controls
- manual, 5-1
- remote, 5-1
- transfer test, 3-1

cool-down time delay, *see* Feature 2E

D

DIP switches, 4-1

drawings, *see back of manual*

E

electrical operation, 1-4

engine starting contacts, 1-2

ER relay, 2-1, 4-4

exerciser, 5-2

F

failure
- *see* trouble-shooting, 3-2

features
- Feature 1, 2-1, 4-1, 4-5
- Feature 2B, 2-1, 4-1, 4-6
- Feature 2E, 2-1, 4-1, 4-6
- Feature 3A, 2-1, 4-1, 4-5
- Feature 4B, 4-1, 4-7, 4-8, 4-9
- Feature 5, 1-4, 2-1, 3-1, 4-4,
- Feature 7/8, 1-2
- Feature 9A/9B, 1-4, 3-1
- Feature 14A/14B, 5-4
- Feature 17, 4-4, 5-1
- Feature 34A, 4-4, 5-1
- Feature 34B, 4-4, 5-1

frequency
- pickup and dropout settings, 4-1
- selection, 4-8

G

ground, control panel, 1-2

H

harnesses, 1-3
- disconnect plug, 3-5

help
- *see* Authorized ASCO Service Centers page ASI3253

I

identification label, ii

inphase monitor control, 5-5

installation, 1-1

insulator backing piece, 1-1
- illustration of, 1-1
- warning, 1-1

L

latch, control panel cover, 4-2

LEDS, *see* lights

lights, 1-4, 3-1, 4-4, 5-4

lubrication, 3-5

M

maintenance, preventive, 3-1

manual control, optional, *see* Acc. 6B, Acc. 6C, 5-1

manual load transfer, 3-2
- warning, 3-2

manual operation, 1-3
- illustration of, 1-3
- warning, 1-3

motor load transfer, Acc. 27, 5-5

mounting, 1-1

N

nameplate, ii

NR relay, 2-1, 4-4

O

operation
- electrical, 1-4
- manual, 1-3
  - illustration of, 1-3
  - warning, 1-3
- sequence of, 2-1

optional accessories, *see* accessories

override
- bypass time delay 4-1, 4-3
- momentary outages, *see* Feature 1
- plant exerciser, 5-2

P

parts, 3-1

phase
- rotation, 1-1
- selection, 4-8

plug, control panel, 3-1

problem, 3-2

R

rating label, ii

relays, NR, ER, SE, 2-1, 4-4

remote controls, 5-1

replacement parts, 3-1

retransfer to normal, *see* Feature 3A

Katolight Service - Master Repair Manual - Page 3930

S

SE relay, 2-1, 4-4

sensor settings, 4-1

sequence of operation, 2-1

service
  see Authorized ASCO Service Centers page ASI3253

settings
  changing, 4-2
  factory, 4-1, 4-3
  frequency, 4-1
  time delay, 4-1
  voltage, 4-1

standard features
  see Features

switch
  bypass time delay, 4-1, 4-3
  DC power, 4-3
  DIP, 4-1, 4-3
  transfer, 1-1, 1-2, 1-3
  transfer test, 1-4, 3-1

T

test, functional, 1-3

time delay
  adjustment, 4-1
  bypass, 4-1, 4-3
  gen-set cooldown, 4-1
  how to change, 4-2
  override momentary outages, 4-1
  settings, 4-1
  transfer to emergency, 4-1
  transfer to normal 4-1

timer (plant exerciser), 5-2
  how to read, 5-3
  how to set, 5-2
  override, 5-3
  trouble-shooting, 5-3

transfer to emergency, 2-1
  time-delay, *see* Feature 2B

transfer test, 1-4, 3-1

trouble-shooting, 3-2
  optional inphase monitor control, 5-5
  optional plant exerciser, 5-3

V

voltage, pickup and dropout settings, 4-1

NOTES

Katolight Service - Master Repair Manual - Page 3931

Printed in U.S.A.

Cutler-Hammer

ATC-300
Automatic Transfer Switch Controller

Technical Data

New Information



Introduction

The Cutler-Hammer® ATC-300 Automatic Transfer Switch Controller from Eaton's Electrical business is a comprehensive, multi-function, microprocessor-based automatic transfer switch controller. It is a compact, self-contained, panel-mounted controller that is designed to accurately monitor power sources and provide the necessary intelligence to reliably operate a transfer switch through a series of programmed sensing and timing functions. The ATC-300 provides an unmatched degree of programming flexibility to address the needs of any system.

Primary Functions

As standard, the ATC-300 Automatic Transfer Controller will:

- Monitor normal and emergency source voltages and frequencies.
- Provide transfer and re-transfer control signals.
- Provide engine/generator starting and shutdown signals.
- Permit customer programming of operational set points.
- Display real-time and historical information.
- Permit system testing.
- Store customer and factory established parameters in nonvolatile memory.
- Provide faceplate source status indication.
- Provides an LCD-based display for programming and status readouts.

Operational Simplicity

From installation to programming to usage, the ATC-300 Controller was designed with operational simplicity in mind. Only one style needs to be considered regardless of input/output requirements or system voltages and frequencies. The intuitive front panel interface simplifies routine operation, programming, and data presentation and set point adjustment. An LCD-based display is backlit for enhanced visibility. The front panel membrane pushbuttons with positive-feedback move the ATC-300 Controller display from function-to-function or step-to-step within a function. The ATC-300 Controller provides the functionality of multiple devices combined in one package and mounts in less than 5.75 inches (146.1 mm) x 7.75 inches (196.8 mm) of panel space.

Industrial Design Highlights

- True rms voltage sensing of normal and emergency sources.
- Frequency sensing of normal and emergency sources.
- Voltage unbalance and phase rotation sensing.
- Programmable set points stored in nonvolatile memory.
- PowerNet™ communications capable.
- System monitoring with historical data storage and display.
- Gold-plated engine start contact.
- Digital set points for accurate and consistent performance.
- Automatic plant exerciser.
- UV-resistant faceplate with Mimic Diagram and LED status indicators.
- LCD-based, backlit, two-line display.
- Suitable for application over a wide range of environmental conditions.
- Self-diagnostic and system diagnostic functions with LED indication.
- Help function for detailed description of displayed message.
- System Test pushbutton.
- Positive feedback membrane pushbuttons for application in harsh environments.
- Password protected access to programming mode.
- Pretransfer contacts.
- Bypass Time Delay pushbutton.
- Control input for remote testing or peak shaving applications.
- Five different control input functions for maximum operational flexibility.
- In-phase and Time Delay Neutral transfer modes for systems with inductive loads.

Standards

The Cutler-Hammer ATC-300 Automatic Transfer Switch Controller meets or exceeds all industry standards for endurance, reliability and performance. It is designed to meet the needs of markets worldwide.

The ATC-300 Automatic Transfer Switch Controller is designed and built as standard in accordance with the following standards where applicable.

Table 1. Standards

UL® 1008	UL Standard for Safety for Transfer Switch Equipment
UL 991	Tests for Safety-Related Controls Employing Solid-State Devices
CSA® 22.2 No.178	Canadian Standards Association
IEC 61000-4-2, 61000-4-3, 61000-4-4 61000-4-5 61000-4-6 61000-4-11	International Electrotechnical Commission EMC Standards
FCC Part 15, Class A	Federal Communication Commission RF Emissions
CISPR 11	International Electrotechnical Commission Standard for RF Emissions
UBC®, BOCA® Seismic Zone 4	California Building Code
CE	European Standards Conformance

Katolight Service - Master Repair Manual - Page 3934

ATC-300 Automatic Transfer Switch Controller Product Overview



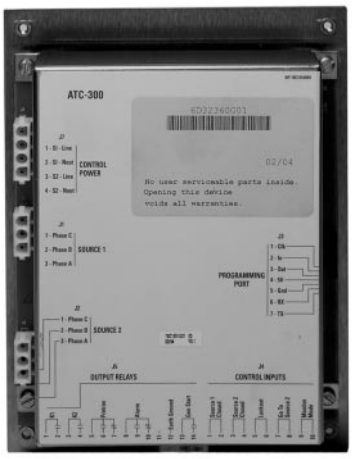

ATC-300 Automatic Transfer Switch Controller

Table 2. Product Overview

Specifications	Value
Voltage	
Voltage Measurements of: Voltage Measurement Range Voltage Measurement Accuracy	Source 1 and 2: VAB, VBC and VCA 0 – 790 Vac rms ±1% of Full Scale
Frequency	
Frequency Measurements of: Frequency Measurement Range Frequency Measurement Accuracy	Source 1 and 2 40 – 70 Hz ±0.3 Hz
Control Power	
Input Range	65 Vac – 145 Vac rms, 50/60 Hz
System Inputs	
Source 1 Closed Source 2 Closed Lockout	Yes Yes Yes
Go to Source 2 Monitor Mode	Yes Yes
Output Contacts	
Form “A” for Generator Start Form “A” for Control	(1) 5 A, 250 Vac/30 Vdc (2) 10 A, 250 Vac/30 Vdc
Form “C” for Alarm Form “C” for Pre-Transfer	(1) 10 A, 250 Vac/30 Vdc (1) 10 A, 250 Vac/30 Vdc
Front Panel	
LED Indication	Unit Status. Source 1 and 2: Available and Connected (5 Total)
Main Display	LCD-Based Display
Parameters Displayed	Voltage, Frequency, Status, History, Time, Date, Set Points, Help Information
Stored Historical Data Includes:	Engine Run Time, Source 1 Available Time, Source 2 Available Time, Source 1 Connect Time, Source 2 Connect Time, Load Energized Time, Number of Transfers; Date, Time and Reason for Last 16 Transfers; Monitor Mode Event, Fail-Safe Event, Aborted Test

Table 2. Product Overview (Continued)

Specifications	Value
Front Panel	
Display Language Enclosure Compatibility	English, French NEMA® 1, 12 and 3R, UV-Resistant Faceplate
Operating Environmental Range	Operation -20°C – +70°C, Storage -30°C – +85°C, Humidity 0% – 95% Relative (Non-condensing)
Applicable Standards	UL 1008, UL 991, FCC Part 15, CISPR 11, IEC 1000-2,3,4,5, CSA, UBC and BOCA for Seismic Zone 4
Programming Access	Password
Front Panel Input Pushbuttons	Engine Test, Step, Help, Lamp Test, Increase, Decrease, Alarm Reset, Bypass Time Delays, Enter
Programming Selections	
Time Delay Normal to Emergency Time Delay Emergency to Normal Time Delay Engine Cooldown	0 – 1800 Seconds 0 – 1800 Seconds 0 – 1800 Seconds
Time Delay Engine Start Time Delay Neutral Time Delay Emergency Fail	0 – 120 Seconds 0 – 120 Seconds 0 – 6 Seconds
In-Phase In-Phase Frequency Difference Synchronization Time Allowance	Enabled or Disabled 0 – 3 Hz 1 – 60 Minutes
Pre-Transfer Signal Plant Exerciser	1 – 120 Seconds (Form “C” Contact) Selectable: Disabled, Daily or 7, 14, 28-Day Intervals, 0 – 600 Minutes, Load or No Load
System Sensing Voltage Unbalance Phase Reversal	3-Phase or Single-Phase 5% – 20% ABC – CBA
Test Pushbutton Mode	Disabled, Load, No Load
Undervoltage Dropout Range Undervoltage Pickup Range Overvoltage Dropout Range Overvoltage Pickup Range	50% – 97% of Nominal Dropout +2% – 99% of Nominal 105% – 120% of Nominal 103% of Nominal to Dropout -2%
Underfrequency Dropout Range Underfrequency Pickup Range	90% – 97% of Nominal Dropout +1 Hz – 99% of Nominal
Overfrequency Dropout Range Overfrequency Pickup Range	103% – 110% of Nominal 101% of Nominal to Dropout -1 Hz

Katolight Service - Master Repair Manual - Page 3935

ATC-300 Automatic Transfer Switch Controller Front Panel Display and Operator Functions

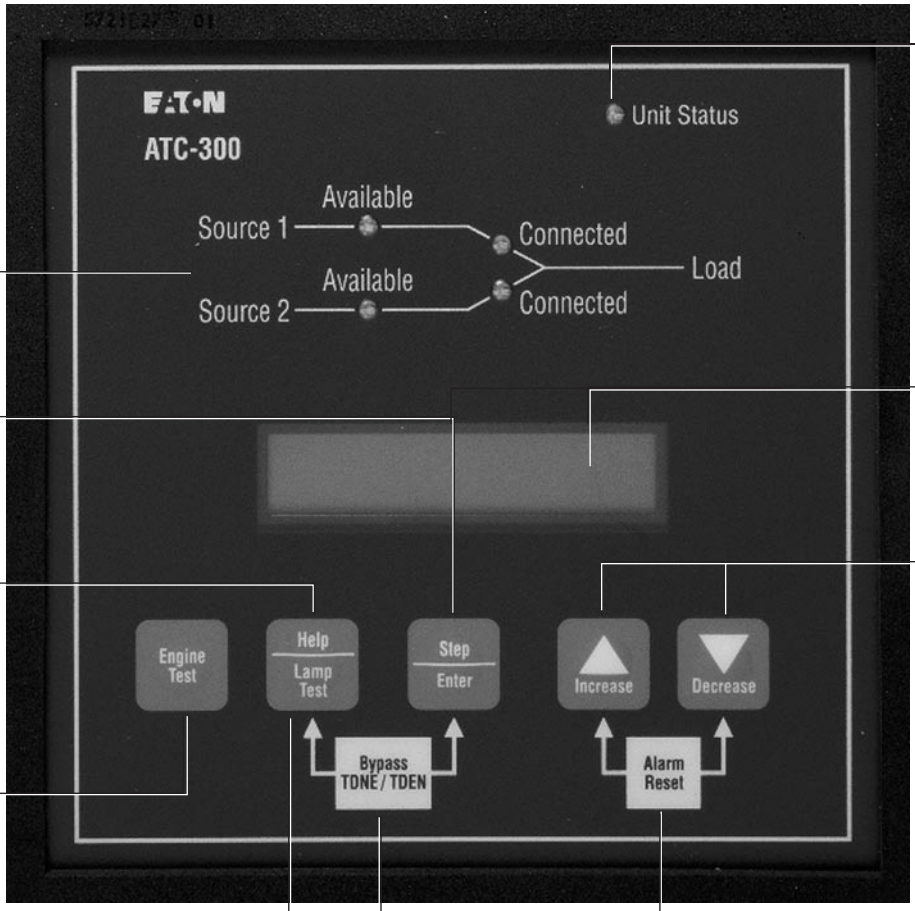

Unit Status
The Unit Status LED is a blinking indicator for self and system diagnostics.

Mimic Diagram
Source 1 and Source 2 color-coded LEDs provide Available and Connected status indication.

LCD-Based Display
The LCD-based display is a backlit, 2-line, 16-character display. Displayed information includes:
- Source voltages and frequency
- Time/date stamp
- Historical data
- Programming and set point information
- Password entry

Step/Enter
Pressing the Step/Enter pushbutton advances the information through the programming or display cycle.

Help
Pressing the Help pushbutton in any function mode will bring up display messages, explanations and prompts to assist the operator.

Increase and Decrease
Pressing the Increase or Decrease pushbuttons effect the value of the function presently active on the LCD-based display.

Engine Test
Pressing the Engine Test pushbutton twice initiates engine test cycle.

Alarm Reset
Pressing the Increase and Decrease pushbuttons simultaneously restores automatic operation in the event of an alarm condition).

Lamp Test
Pressing the Lamp Test pushbutton lights all LEDs and then displays ATC-300 controller information.

Bypass TDNE/TDEN
Pressing Step and Help/Lamp Test pushbuttons simultaneously reduces programmed time delays to zero to simplify test procedures.

Katolight Service - Master Repair Manual - Page 3936

ATC-300 Automatic Transfer Switch Controller

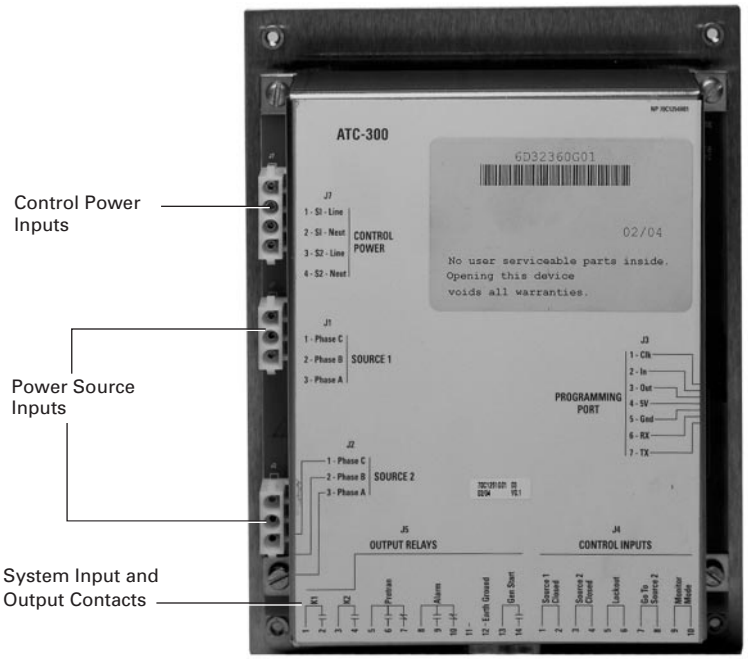

Rear View of ATC-300 Automatic Transfer Switch Controller

Output Contacts: The output contacts are dry relay contacts. The GEN START contact is rated 5 amperes at 250 Vac/ 30 Vdc. All other contacts are rated 10 amperes at 250 Vac/30 Vdc.

- K1, K2: These Form "A" output contacts are utilized to control single power switching mechanisms. They operate in conjunction with the SOURCE 1 and 2 CLOSED inputs.
- ALARM: Form "C" contact. This relay is energized during any of the following alarm conditions: failure of the power switching device to open or close, motor operator failure, unsuccessful in-phase transition, lockout condition, failed engine test, failed plant exerciser operation.
- PRE-TRAN: This relay operates on a timed basis (adjustable 0 – 120 seconds) prior to any transfer operation. Timing begins after TDNE or TDEN times out.
- GEN START: This is a latching relay utilized to initiate startup and shutdown cycles of the engine/ generator set.

Control Power Inputs (Source 1 and Source 2): The Control Power Input range is 65 Vac – 145 Vac, 50/60 Hz.

System Inputs: System Inputs are "wetted" contacts. Some system inputs are optional and must be enabled via factory control.

- SOURCE 1 CLOSED: This input is connected to the Source 1 power switching device position indication contact.
- SOURCE 2 CLOSED: This input is connected to the Source 2 power switching device position indication contact.
- LOCKOUT: This input is connected to an alarm contact. During an alarm condition, automatic operation is inhibited.
- GO TO SOURCE 2: This input provides the means to remotely initiate a startup and transfer cycle or retransfer and shutdown cycle.
- MONITOR MODE: This input allows the controller to be placed in a "non-automatic mode" while continuing to monitor source voltages and frequencies.
- EARTH GROUND: Provides a connection point for the common system ground.

Power Source Inputs (SOURCE 1 and SOURCE 2): The Power Source Inputs are the connection points for the power sources that are to be monitored. Three-phase systems are connected to Phase A, B and C. Single-phase systems are connected to points Phase A and Phase B.

Katolight Service - Master Repair Manual - Page 3937

Standard and Optional Features

All ATC-300 standard and optional features are listed in **Table 3**. All standard features are included and provided on all ATC-300 units.

Optional features must be specified with order entry and factory programmed. Only features that are originally ordered and factory programmed will appear on the LCD-based display. The ATC-300 Upgrade Module may be ordered to add optional features in the field.

Table 3. ATC-300 Automatic Transfer Controller — Standard and Optional Features

ATC-300 Features	Cutler-Hammer Feature Number	Field Programmable Set Point Range
Standard		
Time Delay Source 1 to Source 2 (TDNE) Time Delay Engine Start (TDES) Time Delay Source 2 to Source 1(TDEN) Time Delay Engine Cooldown (TDEC)	1 2 3 4	0 – 1800 Seconds 0 – 120 Seconds 0 – 1800 Seconds 0 – 1800 Seconds
Source 2 Single-Phase Undervoltage and Underfrequency Sensing	5B	UV Dropout: 50% – 97% of Nominal UV Pickup: (Dropout +2%) – 99% of Nominal UF Dropout: 90% – 97% of Nominal UF Pickup: (Dropout +1 Hz) – 99% of Nominal
Source 2 (Emergency) 3-Phase Undervoltage and Underfrequency Sensing	5J	UV Dropout: 50% – 97% of Nominal UV Pickup: (Dropout +2%) – 99% of Nominal UF Dropout: 90% – 97% of Nominal UF Pickup: (Dropout +1 Hz) – 99% of Nominal
Test Pushbutton Time Delay Emergency Fail (TDEF) Bypass TDEN Time Delay Bypass TDNE Time Delay	6B 7 8C 8D	No Load, Load or Disabled 0 – 6 Seconds Pushbutton Pushbutton
Source 1 Connected LED Indication Source 2 Connected LED Indication	12C 12D	N/A N/A
Source 1 Available LED Indication Source 2 Available LED Indication	12G 12H	N/A N/A
Plant Exerciser (Fail-Safe) with Selectable: (Daily, 7, 14 or 28-Day Cycle), (Load or No Load), (Day, Hour, Minute for Test Event) (0 – 600 Minutes Test Length)	23K	(Daily, 7, 14 or 28-Day Cycle), (No Load or Load) (Day, Hour, Minute) (0 – 600 Minutes Test Length)
Source 1 (All Phase) Undervoltage Sensing	26A	UV Dropout: 50% – 97% of Nominal UV Pickup: (Dropout +2%) – 99% of Nominal
Automatic Operation	29A	N/A
Seismic Zone 4 Qualification	42	N/A
Nominal Frequency Nominal Voltage	N/A N/A	50 or 60 Hz 120 – 600 Vac
System Phases Engine Test Run Duration for Engine Test Pushbutton and Plant Exerciser Duration	N/A N/A	1 or 3 0 – 600 Minutes
Optional		
Source 2 Single-Phase Overvoltage and Overfrequency Sensing	5C	OV Dropout: 105% – 120% of Nominal OV Pickup: 103% of Nominal to (Dropout -2%) OF Dropout: 103% – 110% of Nominal OF Pickup: 101% of Nominal to (Dropout -1 Hz)
Source 2 Single-Phase Undervoltage	5D	UV Dropout: 50% – 97% of Nominal UV Pickup: (Dropout +2%) – 99% of Nominal
Source 2 Single-Phase Overvoltage	5E	OV Dropout: 105% – 120% of Nominal OV Pickup: 103% of Nominal to (Dropout -2%)
Source 2 3-Phase Undervoltage	5F	UV Dropout: 50% – 97% of Nominal UV Pickup: (Dropout +2% – 99% of Nominal)
Source 2 3-Phase Overvoltage	5G	OV Dropout: 105% – 120% of Nominal OV Pickup: 103% of Nominal to (Dropout -2%)
Source 2 Phase Reversal	5H	0 = Disabled, 1 = ABC, 2 = CBA
Source 2 3-Phase Overvoltage and Overfrequency Sensing	5K	OV Dropout: 105% – 120% of Nominal OV Pickup: 103% of Nominal to (Dropout -2%) OF Dropout: 103% – 110% of Nominal OF Pickup: 101% of Nominal to (Dropout -1 Hz)
Source 2 3-Phase Voltage Unbalance	5L	(0 = Disabled, 1 = Active), (Dropout = 5% – 20%) (Pickup = 3% – (Dropout -2%)
Source 1 Overvoltage Sensing	26C	OV Dropout: 105% – 120% of Nominal OV Pickup: 103% of Nominal to (Dropout -2%)
Go to Source 2	26D	N/A
Source 1 Underfrequency Sensing	26E	UF Dropout: 90% – 97% of Nominal UF Pickup: (Dropout +1 Hz) – 99% of Nominal
Source 1 Overfrequency Sensing	26F	OF Dropout: 103% – 110% of Nominal OF Pickup: 101% of Nominal to (Dropout -1 Hz)
Source 1 Phase Reversal	26H	0 = Disabled, 1 = ABC, 2 = CBA
Source 1 3-Phase Voltage Unbalance	26L	(0 = Disabled, 1 = Active), (Dropout = 5% – 20%) (Pickup = 3% – (Dropout -2%)
Time Delay Neutral (TDN)	32A	0 – 120 Seconds
In-Phase Transition with Selectable (Enable or Disable), (Frequency Difference 0 – 3 Hz), (Synchronization Time 1 – 60 Minutes) and Default to Time Delay Neutral	32E	(Enable or Disable) (Frequency Difference 0 – 3 Hz) (Synchronization Time 1 – 60 Minutes)
Pretransfer Contacts (1NO/1NC)	35A	N/A

Katolight Service - Master Repair Manual - Page 3938

ATC-300 Upgrade Module

If an optional feature needs to be added after a transfer switch is in the field, contact the factory for availability of field upgrades with the ATC-300 Upgrade Module. This module can download new programs into the Automatic Transfer Controller (ATC-300) via connection to the communication module connector on the rear of the Automatic Transfer Controller device.

Dimensions in Inches (mm)

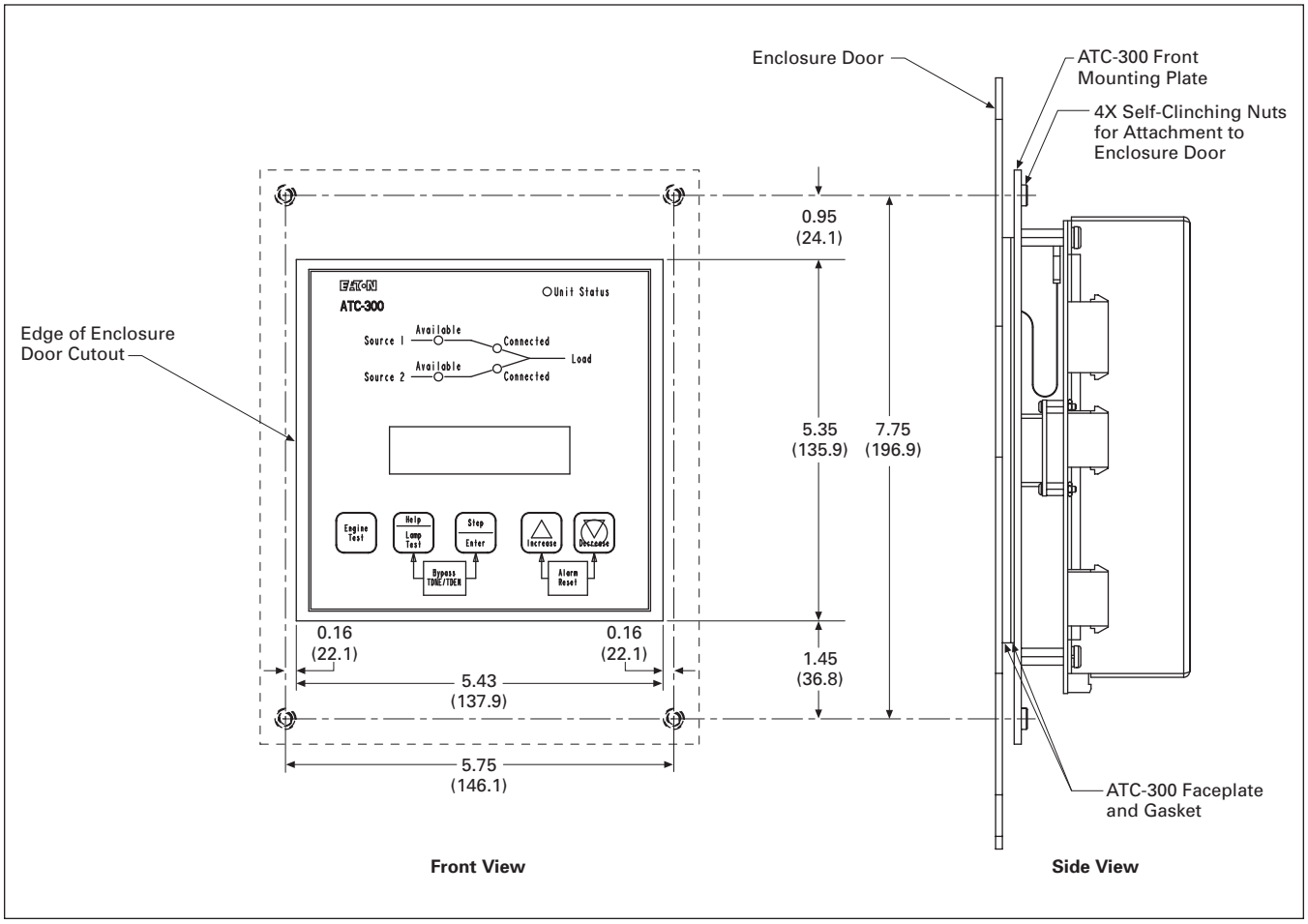

Figure 1. Automatic Transfer Controller (ATC-300)

UL is a federally registered trademark of Underwriters Laboratories Inc. CSA is a registered trademark of the Canadian Standards Association. UBC is a trademark of the International Conference of Building Officials (ICBO). BOCA is a registered trademark of Building Officials and Code Administrators International, Inc. Cutler-Hammer is a federally registered trademark of Eaton Corporation. NEMA is the registered trademark and service mark of the National Electrical Manufacturers Association.

Dimensions are approximate and should not be used for construction purposes (1 inch = 25.4 mm).

Katolight Service - Master Repair Manual - Page 3939

Eaton Electrical Inc.
1000 Cherrington Parkway
Moon Township, PA 15108-4312
USA
tel: 1-800-525-2000
www.EatonElectrical.com

© 2004 Eaton Corporation
All Rights Reserved
Printed in USA
Publication No. TD01602006E / Z-2561
May 2004

EATON | Cutler-Hammer

April 27, 2004

O & M Manual for the EATON ATC-300 Automatic Transfer Switch Controller

Instruction Booklet

New Information

Description	*Page*
Introduction	2
Hardware Description	7
Status Monitoring and Setpoints	11
Typical Function of the ATC-300 Controller	13
Operation	15
Programming	19
Troubleshooting and Maintenance	23
Appendix A: Display Messages for Status and Timers	25
Appendix B: Operational Flowcharts	26
Appendix C: Display Menu Tree	29
Appendix D: Pickup / Dropout Tables	35



⚠ CAUTION

THE ATC-300 CONTROLLER IS FACTORY PROGRAMMED FOR A SPECIFIC AUTOMATIC TRANSFER SWITCH. DO NOT ATTEMPT TO INTERCHANGE ATC-300 CONTROL DEVICES WITHOUT CONSULTING EATON ELECTRICAL.

All possible contingencies that may arise during installation, operation, or maintenance, and all details and variations of this equipment do no purport to be covered by these instructions. If further information is desired by the purchaser regarding a particular installation, operation, or maintenance of particular equipment, please contact an authorized EATON Sales Representative or the installing contractor.

SECTION 1: INTRODUCTION

1.1 Preliminary Comments and Safety Precautions

This technical document is intended to cover most aspects associated with the installation, application, operation, and maintenance of the Automatic Transfer Controller (ATC)-300 Controller. It is provided as a guide for authorized and qualified personnel only in the selection and application of the ATC-300 Controller. Please refer to the specific WARNING and CAUTION in Section 1.1.2 before proceeding. If further information is required by the purchaser regarding a particular installation, application, or maintenance activity, please contact an authorized EATON sales representative or the installing contractor.

1.1.1 Warranty and Liability Information

No warranties, expressed or implied, including warranties of fitness for a particular purpose of merchantability, or warranties arising from course of dealing or usage of trade, are made regarding the information, recommendations and descriptions contained herein. In no event will EATON be responsible to the purchaser or user in contract, in tort (including negligence), strict liability or otherwise for any special, indirect, incidental or consequential damage or loss whatsoever, including but not limited to damage or loss of use of equipment, plant or power system, cost of capital, loss of power, additional expenses in the use of existing power facilities, or claims against the purchaser or user by its customers resulting from the use of the information and descriptions contained herein.

1.1.2 Safety Precautions

All safety codes, safety standards, and/or regulations must be strictly observed in the installation, operation, and maintenance of this device.

⚠ WARNING

THE WARNINGS AND CAUTIONS INCLUDED AS PART OF THE PROCEDURAL STEPS IN THIS DOCUMENT ARE FOR PERSONNEL SAFETY AND PROTECTION OF EQUIPMENT FROM DAMAGE. AN EXAMPLE OF A TYPICAL WARNING LABEL HEADING IS SHOWN ABOVE TO FAMILIARIZE PERSONNEL WITH THE STYLE OF PRESENTATION. THIS WILL HELP TO INSURE THAT PERSONNEL ARE ALERT TO WARNINGS, WHICH APPEAR THROUGHOUT THE DOCUMENT. IN ADDITION, WARNINGS AND CAUTIONS ARE ALL UPPER CASE AND BOLDFACE.

⚠ CAUTION

COMPLETELY READ AND UNDERSTAND THE MATERIAL PRESENTED IN THIS DOCUMENT BEFORE ATTEMPTING INSTALLATION, OPERATION, OR APPLICATION OF THE EQUIPMENT. IN ADDITION, ONLY QUALIFIED PERSONS SHOULD BE PERMITTED TO PERFORM ANY WORK ASSOCIATED WITH THIS EQUIPMENT. ANY WIRING INSTRUCTIONS PRESENTED IN THIS DOCUMENT MUST BE FOLLOWED PRECISELY. FAILURE TO DO SO COULD CAUSE PERMANENT EQUIPMENT DAMAGE.

1.2 Background

Transfer switches are used to protect critical electrical loads against loss of power. The load's Source 1 power source is backed up by a Source 2 power source. A transfer switch is connected to both the Source 1 and Source 2 power sources and supplies the load with power from one of the two sources. In the event that power is lost from Source 1, the transfer switch transfers the load to the Source 2 power source. This transfer can be automatic or manual, depending upon the type of transfer switch equipment being used. Once Source 1 power is restored, the load is automatically or manually transferred back to the Source 1 power source, again depending upon the type of transfer equipment being used.

In automatic transfer switch (ATS) equipment, the switch's intelligence system initiates the transfer when the Source 1 power falls below or rises above a preset voltage or frequency. If the Source 2 power source is a standby generator, the ATS initiates generator start up then transfers to the Source 2 power source when sufficient generator voltage is available. When Source 1 power is restored, the ATS automatically transfers back to the Source 1 power source and initiates generator engine shutdown.

An ATS consist of three basic elements:

1. Main contacts to connect and disconnect the load to and from the power sources.
2. A mechanism to transfer the main contacts from source to source.
3. Intelligence/supervisory circuits to constantly monitor the condition of the power sources and thus provide the intelligence necessary for the switch and related circuit operation.

This manual deals with the third basic element of the ATS, the required intelligence/supervisory circuits. Earlier ATSs were controlled by relay logic type or a solid-state, single board controllers. In either case, the control panel consisted of a number of individually mounted and wired devices offering a limited amount of system flexibility, especially in the case of the relay logic design. The ATC-300 Controller advances the application of intelligence, supervisory, and programming capabilities for ATS equipment.

1.3 Product Overview

The ATC-300 Controller is a comprehensive, multi-function, microprocessor based ATS controller. It is a compact, self-contained, panel mounted device designed to replace traditional relay and solid-state logic panels.

Katolight Service - Master Repair Manual - Page 3942

Designed to meet the needs of markets worldwide, the ATC-300 Controller:

- Is a UL Recognized Component
- Complies with UL 1008/ CSA 22.2-178
- Meets the Intent of UL 991
- Meets IEC 1000-4-2, 1000-4-3, 1000-4-4, 1000-4-5, 1000-4-6, and 1000-4-11
- Meets CISPR 11, Class A
- Complies with FCC Part 15, Class A
- Meets European Standards Conformance (CE mark)

The ATC-300 Controller provides an unmatched degree of programmed flexibility to address the needs of any system. It operates from all system voltages between 120 and 600 Vac, single-phase and 3-phase, at 50 or 60 Hz. In addition, a period of no control power operation is provided. The ATC-300 Controller monitors the condition of the 3-phase line-to-line voltage and frequency of both the Source 1 and Source 2 power sources. It can also be programmed for single-phase operation. The ATC-300 Controller provides the necessary intelligence to insure that the switch operates properly through a series of programmed sensing and timing functions.

A standard ATC-300 Controller will:

- Monitor Source 1 and Source 2 power source voltages and frequencies;
- Provide undervoltage monitoring of the Source 1 and Source 2 power sources;
- Permit customer programming;
- Display real-time and historical information;
- Permit system testing;
- Store customer/factory established parameters in nonvolatile memory; and
- Provide faceplate source status indications.

1.4 Glossary

With respect to their use within this document and as they relate to ATS and controller operation, the following terminology is defined.

Available
A source is defined as "available" when it is within its undervoltage/overvoltage/ underfrequency/overfrequency (if applicable) setpoint ranges for the nominal voltage and frequency setting.

Connected
Connected is defined as when the input is shorted by an external contact or connection.

Failed or Fails
A source is defined as "failed" when it is outside of the applicable voltage and frequency setpoint ranges for the nominal voltage and frequency setting for a time exceeding 0.5 seconds after the time delay emergency fail (TDEF) time delays expires.

Failsafe
Failsafe is a feature that prevents disconnection from the only available power source and also forces a transfer or re-transfer operation to the only available power source.

Re-Transfer
Re-transfer is defined as a change of the load connection from the Source 2 to the Source 1.

Source 1
Source 1 is the primary source (normal source, normal power source, or normal).

Source 2
Source 2 is the secondary source (emergency source, emergency power source, emergency, standby, or backup source).

Source 1: Failed or Fails
Source 1 is defined as "failed" when it is outside of its undervoltage/overvoltage/ underfrequency/overfrequency (if applicable) setpoint ranges for the nominal voltage and frequency setting.

Source 2: Failed or Fails
Source 2 is defined as "failed" when it is outside of its undervoltage/overvoltage/ underfrequency/overfrequency (if applicable) setpoint ranges for the nominal voltage and frequency setting for a time exceeding 0.5 seconds after the TDEF time delay expires.

Transfer
Transfer is defined as a change of the load connection from the Source 1 to the Source 2 power source, except when specifically used as "Transfer to Neutral".

Transfer to Neutral
Transfer to neutral is defined as when the load circuits are disconnect from both the Source 1 and Source 2 power sources.

Unconnected
Unconnected is defined as when the input is not shorted by an external contact or connection.

$V_{IN, RMS}$
Refers to the operating input voltage (Vac, RMS).

1.5 Functions/Features/Options

The primary function of ATC-300 Controller is to accurately monitor power sources and provide the necessary intelligence to operate an ATS in an appropriate and timely manner. In addition, the ATC-300 Controller provides programming through the device's faceplate or communication option.

1.5.1 Operational Simplicity

From installation to programming to usage, the ATC-300 Controller was designed with operational simplicity in mind. Only one style needs to be considered, regardless of input/output requirements or system voltages and frequencies. The ATC-300 Controller provides the functionality of numerous other devices combined in one package that mounts in 6.5 by 8.5 inches of panel space.

The user-friendly front panel interface simplifies routine operation, programming, data presentation, and setting adjustments. An LCD-based display provides the flexibility of a back-lit display for enhanced visibility. The operation of the front panel membrane pushbuttons move the ATC-300 Controller display from function to function or step to step within a function.

Katolight Service - Master Repair Manual - Page 3943

1.5.2 Standard and Optional Features

A variety of programmable features are available with the ATC 300 Controller to meet a wide variety of application requirements. Individual features or feature combinations provide the intelligence required to tailor ATSs to individual needs.

The features are factory activated, depending upon customer requirements. The specific variable setpoints associated with standard and factory activated features are stored in nonvolatile memory. Activated feature setpoints are available for customer adjustment. Any feature not selected and factory activated cannot be viewed or adjusted.

1.5.2.1 Standard Features

The following is a list of the standard features of the ATC-300 Controller.

1. Time Delay Normal to Emergency (TDNE)

This feature provides a time delay when transferring from the Source 1 to the Source 2 power source. Timing begins when Source 2 becomes available. It permits controlled transfer of the load circuit to Source 2.

Adjustable 0 - 1800 Seconds

2. Time Delay on Engine Starting (TDES)

This feature provides a time delay of the signal to initiate the engine/generator start cycle in order to override momentary power outages or voltage fluctuations of Source 1.

Adjustable 0 - 120 Seconds

3. Time Delay Emergency to Normal (TDEN)

This feature provides a time delay of the re-transfer operation to permit stabilization of Source 1. Timing begins when Source 1 becomes available. If Source 2 fails during timing, then re-transfer is immediate, overriding the time delay.

Adjustable 0 - 1800 Seconds

4. Time Delay for Engine Cool-down (TDEC)

This feature provides a time delay of the signal to initiate the engine/generator stop cycle after the re-transfer operation. This allows the engine/generator to cool down by running unloaded. Timing begins on completion of the re-transfer cycle.

Adjustable 0 - 1800 Seconds

5. Source 2 Monitoring and Protection

This feature provides monitoring and protection based on the Source 2 voltage and/or frequency setpoints. All feature 5 functions are "failsafe" operations.

5B. Single Phase Undervoltage and Underfrequency Protection

Adjustable Undervoltage:
Dropout: 50 - 97% of nominal
Pickup: (Dropout +2%) - 99% of nominal

Adjustable Underfrequency:
Dropout: 90 - 97% of nominal
Pickup: (Dropout +1Hz) - 99% of nominal

5J. 3-Phase Undervoltage and Underfrequency Protection

Adjustable Undervoltage:
Dropout: 50 - 97% of nominal
Pickup: (Dropout +2%) - 99% of nominal

Adjustable Underfrequency:
Dropout: 90 - 97% of nominal
Pickup: (Dropout +1Hz) - 99% of nominal

6. Test Operators

Eaton ATSs are provided with a Test Pushbutton that simulates a loss of the Source 1 power source as standard (Feature 6B). All programmed time delays (TDNE, TDEN, etc.) will be performed as part of the Test. Engine run time of the Test is equal to the Plant Exerciser (Feature 23) programmed setpoint. All Tests are Failsafe protected.

6B. Test Pushbutton

Programmable setpoints include:

1. Load, No Load Testing, or Disabled and
2. Engine run time is equal to the Plant Exerciser Feature 23) setting.

7. Time Delay Emergency Fail (TDEF)

This feature provides a time delay that prevents a connected emergency source from being declared "failed" in order to override momentary generator fluctuations. If the Source 2 power source remains in the failed state then, 0.5 seconds after the TDEF timer expires, the transfer switch will proceed with the programmed sequence for re-transfer. This time delay is only implemented when the Source 2 power source is a generator.

Adjustable 0 - 6 Seconds

8. Time Delay Bypass Pushbutton

This feature provides a way (by pushing the Help and Step pushbutton simultaneously) to bypass the TDNE (Feature 1) and/or TDEN (Feature 2) time delays. The Time Delay Bypass function, when activated by pushing the Help and Step pushbutton simultaneously, will reduce any or all of the programmed time delay to zero.

8C. Bypass TDEN

This feature provides a membrane pushbutton to bypass the TDEN time delay.

8D. Bypass TDNE

This feature provides a membrane pushbutton to bypass the TDNE time delay.

12. Power Source Annunciation

This feature provides LEDs to give switch position and power source availability indications.

Switch Position

Provides LEDs to indicate the switch position.

Katolight Service - Master Repair Manual - Page 3944

12C. Source 1 - Source Connected

This feature provides a green LED that, when lit, indicates the load is connected to Source 1.

12D. Source 2 - Source Connected

This feature provides a red LED that, when lit, indicates the load is connected to Source 2.

Power Source Availability

Provides LEDs to indicate if a power source is available. LEDs may be integral or separate from the controller.

12G. Source 1 - Available

This feature provides a white LED that, when lit, indicates Source 1 is available.

12H. Source 2 - Available

This feature provides an amber LED that, when lit, indicates Source 2 is available.

15. Switch Position Indication Contact

This feature provides a contact that indicates if the power-switching device is in the "Open" or "Closed" position.

15E. Source 1 Position Indication Contact

This feature provides 1 Dry Form "C" contact that indicates the position of the Source 1 power-switching device.

15F. Source 2 Position Indication Contact

This feature provides 1 Dry Form "C" contact that indicates the position of the Source 2 power-switching device.

23. Plant Exerciser (PE)

This feature provides a means for automatic testing of the engine/generator set or standby power system. All programmed time delays will be performed during plant exerciser operations.

23K. Plant Exerciser Selectable – Disabled/1/7/14/28 Day Interval

This feature provides for automatic test operation of the generator. Available test cycles are daily, 7, 14, or 28 days with duration equal to the programmed engine test time.

Programmable setpoints allow for selection of three test cycles:

- Engine Start/Run Only (No Load);
- Exercise with Load Transfer; or Disabled
- This is a "Failsafe" operation.

26. Source 1 - Monitoring and Protection

This feature provides Source 1 monitoring and protection functions. If the Source 1 power supply fails, then the ATC-300 will begin the sequence of operations necessary to transfer the load circuit to the Source 2 power source. All Feature 26 monitoring and protection functions are "failsafe" operations.

26A. All Phase Undervoltage Protection

This feature provides all phase undervoltage monitoring and protection.

Adjustable Undervoltage:
Dropout: 50-97% of nominal
Pickup: (Dropout +2%) to 99% of nominal

26D. Go to Source 2

This feature provides the capability for an external contact opening to initiate a load power transfer to the Source 2 power source. This includes starting the engine/generator, performing the programmed time delays, and the transfer operation. Re-transfer will occur when the external contact is closed or under a "failsafe" condition. A connection point on the controller for the connection of an external contact is included.

29. Alternate Transfer Modes of Operation

Provides standard or optional transfer modes, mode selection devices, and operational methods for ATSs.

29A. Automatic Operation

Provides fully automatic transfer, re-transfer, and engine/generator startup and shutdown operations.

32. Delayed Transition Transfer Modes for Open Transition Transfer Switches

This feature provides delayed transition transfer modes for an open transition transfer switch. Often used in systems with inductive loads, a delayed transition transfer switch may prevent or reduce in-rush currents due to out of phase switching of inductive loads.

32A. Time Delay Neutral

This feature provides a time delay in the neutral position during the transfer and re-transfer operations during which both Source 1 and Source 2 are disconnected from the load circuit. The time delay is programmable and is the same for both transfer and re-transfer operations.

Adjustable 0 - 120 Seconds

Katolight Service - Master Repair Manual - Page 3945

35. Pre-Transfer Signal

This feature provides a signal to a remote device prior to a re-transfer operation. It provides one Form "C" contact (NO/NC) for interface with other equipment (typically elevator controls). The contacts close/open on a timed basis prior to transfer in either direction. After TDNE/TDEN times out, this relay closes and the Pre-transfer Timer (TPRE) starts timing. After the TPRE times out, the transfer proceeds by starting the TDN timer if enabled. The pre-transfer relay opens after the transfer is complete.

Adjustable 0 - 120 Seconds

35A. Pre-transfer Signal with 1 N.O. and 1 N.C. Contacts

This feature provides pre-transfer signal and includes 1 N.O. and 1 N.C. contact.

1.5.2.2 Optional Features

The following is a list of the optional features of the ATC-300 Controller.

5. Source 2 Monitoring and Protection

This feature provides monitoring and protection based on the Source 2 voltage and/or frequency setpoints. All Feature 5 functions are "failsafe" operations.

5C. 1-Phase Overvoltage/Overfrequency

Adjustable Overvoltage:
Dropout: 105 - 120% of nominal
Pickup: (Dropout –2%) - 103% of nominal

Adjustable Overfrequency:
Dropout: 103 - 110% of nominal
Pickup: (Dropout -1Hz) - 101% of nominal

5D. 1-Phase Undervoltage

Adjustable Undervoltage:
Dropout: 50 - 97% of nominal
Pickup: (Dropout +2%) - 99% of nominal

5E. 1-Phase Overvoltage

Adjustable Overvoltage:
Dropout: 105 - 120% of nominal
Pickup: (Dropout –2%) - 103% of nominal

5F. 3-Phase Undervoltage

Adjustable Undervoltage:
Dropout: 50 - 97% of nominal
Pickup: (Dropout +2%) - 99% of nominal

5G. 3-Phase Overvoltage

Adjustable Overvoltage:
Dropout: 105 - 120% of nominal
Pickup: (Dropout –2%) - 103% of nominal

5H. Phase Reversal

For a 3-phase source, this feature monitors the phase sequence of the sources. If both sources do not have the same ABC or CBA sequence, the source that is not connected will be considered "Unavailable".

5K. 3-Phase Overvoltage/Overfrequency

Adjustable Overvoltage:
Dropout: 105 - 120% of nominal
Pickup: (Dropout –2%) - 103% of nominal

Adjustable Overfrequency:
Dropout: 103 - 110% of nominal
Pickup: (Dropout -1Hz) - 101% of nominal

5L. Source 2 3-Phase Source 2 Voltage Unbalance/Loss

For a 3-phase source, this feature monitors phase voltage ratios. Voltage unbalance (%) is calculated as the difference between the maximum and minimum phase voltage, divided by the minimum phase voltage. User-selectable setpoints are available for dropout and pickup unbalance settings (minimum 2% differential). Dropout is adjustable from 5 to 20%. Pickup is adjustable from 3 to (Dropout –2%). A setpoint for user-selectable time delay from 10 to 30 seconds is provided. The factory default setpoints are: 5% dropout, 3% pickup, and 30 seconds time delay. A user-selectable setpoint for enable and disable is also provided.

When an unbalance condition is detected on Source 2, the Unbalance Timer (TD UNBAL) starts timing. After TD UNBAL times out, Source 2 is declared "failed".

12. Power Source Annunciation

This feature provides LEDs to give switch position and power source availability indications.

Overcurrent Trip Indication

Available only with integral Overcurrent Protection (Feature 16). (Shown on Automatic Transfer Controller Display.)

12L. Source 1 Tripped (Requires Feature 16) Via ATC-300 LDC-Based Display

The Automatic Transfer Controller LCD display will read "Lockout" if the Source 1 circuit breaker is in the "tripped" position.

12M. Source 2 Tripped (Requires Feature 16) Via ATC-300 LDC-Based Display

The Automatic Transfer Controller LCD display will read "Lockout" if the Source 2 circuit breaker is in the "tripped" position.

This feature provides Form "C" relay auxiliary contacts.

14. Relay Auxiliary Contacts

This feature provides Form "C" relay auxiliary contacts.

14G. Source 1 Present 1NO/1NC

This feature provides two NO and two NC contacts. The relay is energized only when the Source 1 power source is available.

14H. Source 2 Present 1NO/1NC

This feature provides two NO and two NC contacts. The relay is energized only when the Source 2 power source is available.

Katolight Service - Master Repair Manual - Page 3946

26. Source 1 - Monitoring and Protection

This feature provides Source 1 monitoring and protection functions. If the Source 1 power supply fails, then the ATC will begin the sequence of operations necessary to transfer the load circuit to the Source 2 power supply. All Feature 26 monitoring and protection functions are "failsafe" operations.

26C. All Phase Overvoltage Protection

Provides all phase overvoltage monitoring and protection.

Adjustable Overvoltage:
Dropout: 105-120% of nominal
Pickup: (Dropout -2%) to 103% of nominal

26E. All Phase Underfrequency Protection

Provides all phase underfrequency monitoring and protection.

Adjustable Underfrequency:
Dropout: 90-97% of nominal
Pickup: (Dropout +1Hz) to 99% of nominal

26F. All Phase Overfrequency Protection

Provides all phase overfrequency monitoring and protection.

Adjustable Overfrequency:
Dropout: 103-110% of nominal
Pickup: (Dropout -1Hz) to 101% of nominal

26H. Phase Reversal Protection

For a 3-phase source, this feature monitors the phase sequence of the sources. If a source does not have the same ABC or CBA sequence as the phase reversal setpoint, the source will be considered "Unavailable".

26L. Source 1 3-Phase Voltage Unbalance/Loss

For a 3-phase source, this feature monitors phase voltage ratios. Voltage unbalance (%) is calculated as the difference between the maximum and minimum phase voltage, divided by the minimum phase voltage. User-selectable setpoints are available for dropout and pickup unbalance settings (minimum 2% differential). Dropout is adjustable from 5 to 20%. Pickup is adjustable from 3 to (Dropout −2%)). A setpoint for user-selectable time delay from 10 to 30 seconds is provided. The factory default setpoints are: 5% dropout, 3% pickup, and 30 seconds time delay. A user-selectable setpoint for enable and disable is also provided.

When an unbalance condition is detected on Source 1, the Unbalance Timer (TD UNBAL) starts timing. After TD UNBAL times out, Source 1 is declared "failed".

SECTION 2: HARDWARE DESCRIPTION

2.1 General

The purpose of this section is to familiarize the reader with the ATC-300 Controller hardware, its nomenclature, and to list the unit's specifications. The information presented is divided into the following three parts:

- Operator Panel;
- Rear Access Area; and
- Specification Summary.

2.2 Front (Operator) Panel

The front panel, depending on the installation, is normally accessible from the outside of a panel or door. The front panel provides a means to:

- Alert the user to specific conditions;
- Program the controller; and
- Set and monitor the operating parameters.

The ATC-300 Controller front panel serves two primary functions: output and input. The output function consists of:

- A two-line, 16 character LCD display module
- Five LED outputs

  1 Unit Status

  2 Source 1 Available

  3 Source 1 Connected

  4 Source 2 Available

  5 Source 2 Connected

There are seven input functions accessible through the pushbuttons:

1 Help/Lamp Test

2 Engine Test

3 Step/Enter

4 Increase

5 Decrease

6 Alarm Reset

7 Bypass Time Delay

Katolight Service - Master Repair Manual - Page 3947



Figure 1. The ATC-300 Controller Front Panel.

2.2.1 The Output Function Components

The Display

A 2-line, 16-character alphanumeric LCD Display module is used to display all ATC-300 Controller monitored parameters, setpoints, and messages in easy to read formats. The display has a green high contrast background that allows clear visibility of any information displayed. The display is continuously lit for clear visibility under poorly lit or no light conditions.

Six different displays can be presented via the LCD Display:

- Status Display
- Source 1 Display
- Source 2 Display
- Time/Date Display
- History Display
- Setpoints Display

As a default when there are no active commands or timers being displayed, the display cycles through the following information at three-second intervals. This is referred to as the "Home" screen.

1. Line 1: Date (ex.: 01/20/04)
   Line 2: Military Time (ex.: 15:35:30 [= 3:35:30 PM])
2. Line 1: Source 1
   Line 2: Actual metered values on Source 1 (ex.: 480 Vac 60 Hz)
3. Line 1: Source 2
   Line 2: Actual metered values on Source 2 (ex.: 480 Vac 60 Hz)

See Section 3 for more detailed information.

The LEDs

Unit Status

The green Unit Status LED blinks at a rate of once per second while in the ATC-300 Controller is in the "Run" Mode. This indicates that the ATC-300 has completed a self-diagnostic and system diagnostic cycle. The self-diagnostic cycle checks include the:

- Microprocessor operation and
- Memory operation.

The system diagnostic cycle checks include the:

- Output relay operation;
- Control input operation; and
- Transfer switch operation.

The Unit Status LED blinks at an increased rate while the ATC-300 Controller is in the "Program" Mode.

Source 1 Available

The white Source 1 Available LED illuminates if the Source 1 power source meets the criteria to be considered "available". That is, when it is within its undervoltage/overvoltage/underfrequency/overfrequency/voltage unbalance/phase reversal (if applicable) setpoint ranges for the nominal voltage and frequency setting.

Source 1 Connected

The green Source 1 Connected LED illuminates when the Source 1 switching device and its associated position indicating auxiliary contact are closed.

Source 2 Available

The amber Source 2 Available LED illuminates if the Source 2 power source meets the criteria to be considered "available". That is, when it is within its undervoltage/overvoltage/underfrequency/overfrequency/voltage unbalance/phase reversal (if applicable) setpoint ranges for the nominal voltage and frequency setting.

Source 2 Connected

The red Source 2 Connected LED illuminates when the Source 2 switching device and its associated position indicating auxiliary contact are closed.

2.2.2 The Input Function Components

The Pushbuttons and Combinations

Help/Lamp Test Pushbutton

The Help/Lamp Test pushbutton serves two functions. If the Help/Lamp Test pushbutton is pressed when a message is present on the LCD Display, a detailed description of the message will appear. The detailed message description will scroll across the bottom of the display. The detailed description can be aborted by pressing Help/Lamp Test key a second time.

Katolight Service - Master Repair Manual - Page 3948

If the LCD Display is displaying the Home screen when the Help/Lamp Test key is pressed, all of the LED's will momentarily illuminate, then the following information will scroll across the display:

- Serial number of the ATC-300 Controller;
- Hardware revision number (= parts list revision number);
- Software version and revision number;
- Feature code – a decodable string listing all optional features programmed in the ATC-300 Controller; and
- Firmware version.

Engine Test Pushbutton

The Engine Test pushbutton allows the user to test the Source 2 (generator) engine. The engine test function can be set with the ATC-300 Controller to one of three setpoint modes to allow flexibility in how the test is run:

0 No Load Engine Test;

1 Load Engine Test; or

2 Disabled.

The factory default is set to 1 - Load Engine Test.

For complete information on the Engine Test function, see Section 5.7.

Step/Enter Pushbutton

The Step/Enter pushbutton allows the user to scroll through the information and setpoint displays. By pressing the Step/Enter pushbutton, the information on the LCD Display will advance through the voltage(s), frequency, and status condition of Source 1, then Source 2, then the time and date information, then the history information, then the setpoints. The information on the LCD Display advances one step through the displayed information cycle with each depression of the Step/Enter pushbutton.

Increase Pushbutton

The Increase pushbutton allows the user to increase the value of the setpoints. When ATC-300 Controller is in the "Program" Mode (to change setpoint values), each time the Increase pushbutton is pressed, the value of the displayed item will increase by one.

Decrease Pushbutton

The Decrease pushbutton allows the user to decrease the value of the setpoints. When ATC-300 Controller is in the "Program" Mode (to change setpoint values), each time the Decrease pushbutton is pressed, the value of the displayed item will decrease by one.

Alarm Reset Function (Increase + Decrease Pushbuttons)

Pressing the Increase and Decrease pushbuttons simultaneously will reset the Alarm function. In addition, if both pushbuttons are pressed simultaneously while viewing any of the historical logged values in the program mode, the value of the current item displayed resets to zero.

Bypass Time Delay Function (Step/Enter + Help/Lamp Test)

Pressing the Step/Enter and Help/Lamp Test pushbuttons simultaneously will bypass the TDNE or TDEN functions when they actively counting. The "Bypass TDNE/TDEN" function does not have a user accessible, programmable setpoint for enable or disable.

2.3 REAR ACCESS AREA

The rear access area of the ATC-300 Controller is normally accessible from the rear of an open panel door (Figure 2).

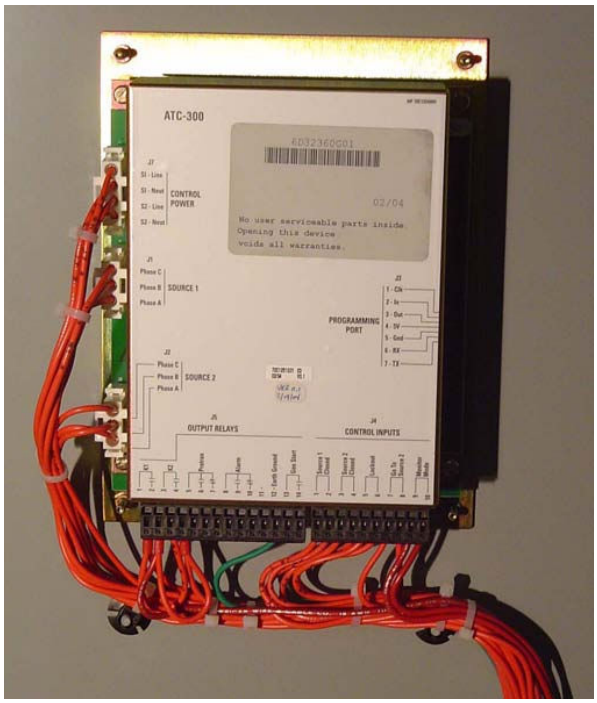

Figure 2. ATC-300 Controller (Rear View).

All wiring connections to the ATC-300 Controller are made at the rear of the chassis.

Note: To allow for uniform identification, the frame of reference when discussing the rear access area is with the panel door open and the User facing the back of the ATC-300 Controller.

Located at the left rear of the chassis are connectors J1, J2, and J7. J1 and J2 provide for voltage monitoring of Source 1 and Source 2 respectively. J7 is provided for Sources 1 and Source 2 control power input. Located at the right rear of the chassis is the J3 programming port connector. The J4 and J5 connectors are located at the bottom of the controller. The J4 connector provides DC wetted connections for various control inputs. The J5 connector provides dry relay contacts for primary control outputs.

See Section 5.5.1 for contact ratings.

Katolight Service - Master Repair Manual - Page 3949

2.4 Specification Summary

Table 1. ATC-300 Controller Specifications

Input Control Voltage	65 to 145 Vac 50/60 Hz
Voltage Measurements of	Source 1 VAB Source 1 VBC Source 1 VCA Source 2 VAB Source 2 VBC Source 2 VCA
Voltage Measurement Range	0 to 790 Vac RMS (50/60 Hz)
Voltage Measurement Accuracy	± 1% of Full Scale
Frequency Measurements of	Source 1 and Source 2
Frequency Measurement Range	40 Hz to 70 Hz
Frequency Measurement Accuracy	± 0.3 Hz Over the Measurement Range
Undervoltage Dropout Range	50 to 97% of the Nominal System Voltage
Undervoltage Pickup Range	(Dropout +2%) to 99% of the Nominal System Voltage
Overvoltage Dropout Range	105 to 120% of the Nominal System Voltage
Overvoltage Pickup Range	103% to (Dropout -2%) of the Nominal System Voltage
Underfrequency Dropout Range	90 to 97% of the Nominal System Frequency
Underfrequency Pickup Range	(Dropout +1Hz) to 99% of the Nominal System Frequency
Overfrequency Dropout Range	103 to 110% of the Nominal System Frequency
Overfrequency Pickup Range	101% to (Dropout -1Hz) of the Nominal System Frequency
Operating Temperature Range	-20 to +70°C (-4 to +158°F)
Storage Temperature Range	-30 to +85°C (-22 to +185°F)
Operating Humidity	0 to 95% Relative Humidity (Non-condensing)
Operating Environment	Resistant to Ammonia, Methane, Nitrogen, Hydrogen, and Hydrocarbons
Generator Start Relay	5 A, 1/6 HP @ 250 Vac 5 A @ 30 Vdc with a 150 W Maximum Load
K1, K2, Pretransfer, Alarm Relays	10 A, 1-3 HP @ 250 Vac 10 A @ 30 Vdc
Applicable Testing	UL Recognized Component Meets Intent of UL 991, 1008 Meets IEC 1000-4-2, 1000-4-3, 1000-4-4, 1000-4-5, 1000-4-6, 1000-4-11 Meets CISPR 11, Class A Complies with FCC Part 15, Class A
Enclosure Compatibility	NEMA 1, NEMA 3R, and NEMA 12 UV Resistant ATC-300 Faceplate

Katolight Service - Master Repair Manual - Page 3950

SECTION 3: STATUS MONITORING AND SETPOINTS

NOTICE

ALTHOUGH A WIDE VARIETY OF PARAMETERS AND SETPOINTS CAN BE DISPLAYED, THEY ARE NOT DISPLAYED IF THEY WERE NOT ORIGINALLY ORDERED AND PROGRAMMED.

NOTICE

WHETHER VIEWING OR PROGRAMMING, THE DISPLAY RETURNS TO THE HOME SCREEN IF NO PUSHBUTTON ACTIVITY IS DETECTED FOR APPROXIMATELY 2.5 MINUTES.

3.1 Status Display

The Status Display provides messages regarding anything that is presently changing or happening to the ATS's status, including source information, timer countdown, and failure reports. Refer to Appendix A for a complete list of Status Display messages.



Figure 3. The LCD Display.

3.1.1 Source 1 and Source 2 Displays

The Source 1 and Source 2 displays indicate the present status of the sources in terms of voltage and frequency. If the source is available, the condition display will be "SOURCE 1 GOOD" or "SOURCE 2 GOOD". If it is unavailable, one of the following possible conditions will be shown:

SOURCE 1 U-V SOURCE 2 U-V

The source voltage has dropped below the dropout setting and not risen above the pickup setting.

SOURCE 1 O-V SOURCE 2 O-V

The source voltage has risen above the dropout setting and not dropped below the pickup setting.

SOURCE 1 U-F SOURCE 2 U-F

The source frequency has dropped below the dropout setting and not risen above the pickup setting.

SOURCE 1 O-F SOURCE 2 O-F

The source frequency has risen above the dropout setting and not dropped below the pickup setting.

SOURCE 1 UNBAL SOURCE 2 UNBAL

The voltage unbalance has risen above the dropout setting and not dropped below the pickup setting.

S1 PHASE REVERSE S2 PHASE REVERSE

The phase sequence does not agree with the setpoint value, indicating that the phase sequence is reversed.

3.1.2 Time/Date Display

The Time/Date Display indicates real time in terms of hours, minutes, and seconds; and month, day, and year. It also indicates individual time and date items for programming purposes. The day of the week can also be set with 1 = Sunday, 2 = Monday, etc. The time, date, and day of the week can be set in the Program Mode.

3.1.3 History Display

The History Display indicates historical and cumulative counter values as follows:

Engine Run Time

This counter will log the generator run time in hours. Time will start being logged at the time the GEN START contacts are closed, and it will stop as soon as they are opened. This counter will count up to 9999 hours and then turn over to 0000. It can be reset to zero in the Program Mode.

Source 1 Connected Time

This counter logs the time in hours that Source 1 has been connected to the load. Time will be logged while the SOURCE 1 CLOSED control input is in the "connected" state. This counter will count up to 9999 hours and then turn over to 0000. It can be reset to zero in the Program Mode.

Source 2 Connected Time

This counter logs the time in hours that Source 2 has been connected to the load. Time will be logged while the SOURCE 2 CLOSED control input is in the "connected" state. This counter will count up to 9999 hours and then turn over to 0000. It can be reset to zero in the Program Mode.

Source 1 Available Time

When Source 1 meets the voltage and frequency setpoint criteria, this counter logs the time in hours. This counter will count up to 9999 hours and then turn over to 0000. It can be reset to zero in the Program Mode.

Source 2 Available Time

When Source 2 meets the voltage and frequency setpoint criteria, this counter logs the time in hours. This counter will count up to 9999 hours and then turn over to 0000. It can be reset to zero in the Program Mode.

Katolight Service - Master Repair Manual - Page 3951

Load Energized Time

When either of the two sources is connected to the load and the connected source is available, this counter will start logging the time in hours. This counter will count up to 9999 hours and then turn over to 0000. It can be reset to zero in the Program Mode.

Total Number of Transfers

This counter logs the number of transfer cycles that occur. This counter will count up to 9999 hours and then turn over to 0000. It can be reset to zero in the Program Mode.

Reason/Date/Time for the 16 Most Recent Transfers

The 16 most recent transfer events are stored in history and may be viewed at the LCD Display as follows:

- Use the Step/Enter pushbutton to step to the "TRANSFER HISTORY" message.
- Press the Increase pushbutton to display the most recent transfer event (T01) along with the type and cause of the event.
- Press the Decrease pushbutton to display the date and time of the event. Continually pressing the Decrease pushbutton will cycle the display between the event display and the date/time of event display.
- Press the Increase pushbutton to display the next most recent transfer event (T02).
- Pressing the Step/Enter pushbutton, while viewing any of the transfer history displays, will exit the Transfer History displays.

3.1.4 Setpoints Display

The Setpoints Display indicates presently programmed setpoints. The setpoints can be altered with valid password entry. Keep in mind; if an optional ATC-300 Controller feature was not originally ordered and programmed, it will not be displayed. Refer to Section 6 for more details on setpoints.

3.1.5 Help Display

This display presents moving language messages, explanations, and prompts to assist the operator. When the Help/Lamp Test Pushbutton is pressed and released a second time during the scrolling of a message, the message is aborted.

Katolight Service - Master Repair Manual - Page 3952

SECTION 4:TYPICAL FUNCTION OF THE ATC-300 CONTROLLER

The ATC-300 Controller operates as follows.

The input connections of the ATC-300 controller are wetted and work on an opening or closure of an external contact. The output connections are dry contacts and function depending on input connections and / or source availability.

120 Vac, 60 Hz is required to power the ATC-300 controller. Power is supplied to either pins 1 and 2 or 3 and 4 on the J-7 connector.

Source 1 (S1) sensing is supplied on the J-1 connector; Source 2 (S2) sensing is supplied on the J-2 connector.

K1 and K2 relays, located on pins 1 and 2 (K1) or pins 3 and 4 (K2) on the J-5 connector, are use to control device position. S1 and S2 inputs are located on pins 1 and 2 (S1) or pins 3 and 4 (S2) on the J-4 connector and are used to sense device position.

K1 closes until the S1 input is satisfied but no longer than 6 seconds before the S1 device Alarm is triggered and the K1 relay is deenergized. The K2 relay functions the same as the K1 relay in that it closes until the S2 input is satisfied (closed) but no longer than 6 seconds before the S2 device Alarm is triggered and the K2 relay is deenergized. Either input MUST be satisfied prior to resetting the Alarm. The S1 and S2 connected inputs are wetted inputs that require a contact closure in order to be satisfied.

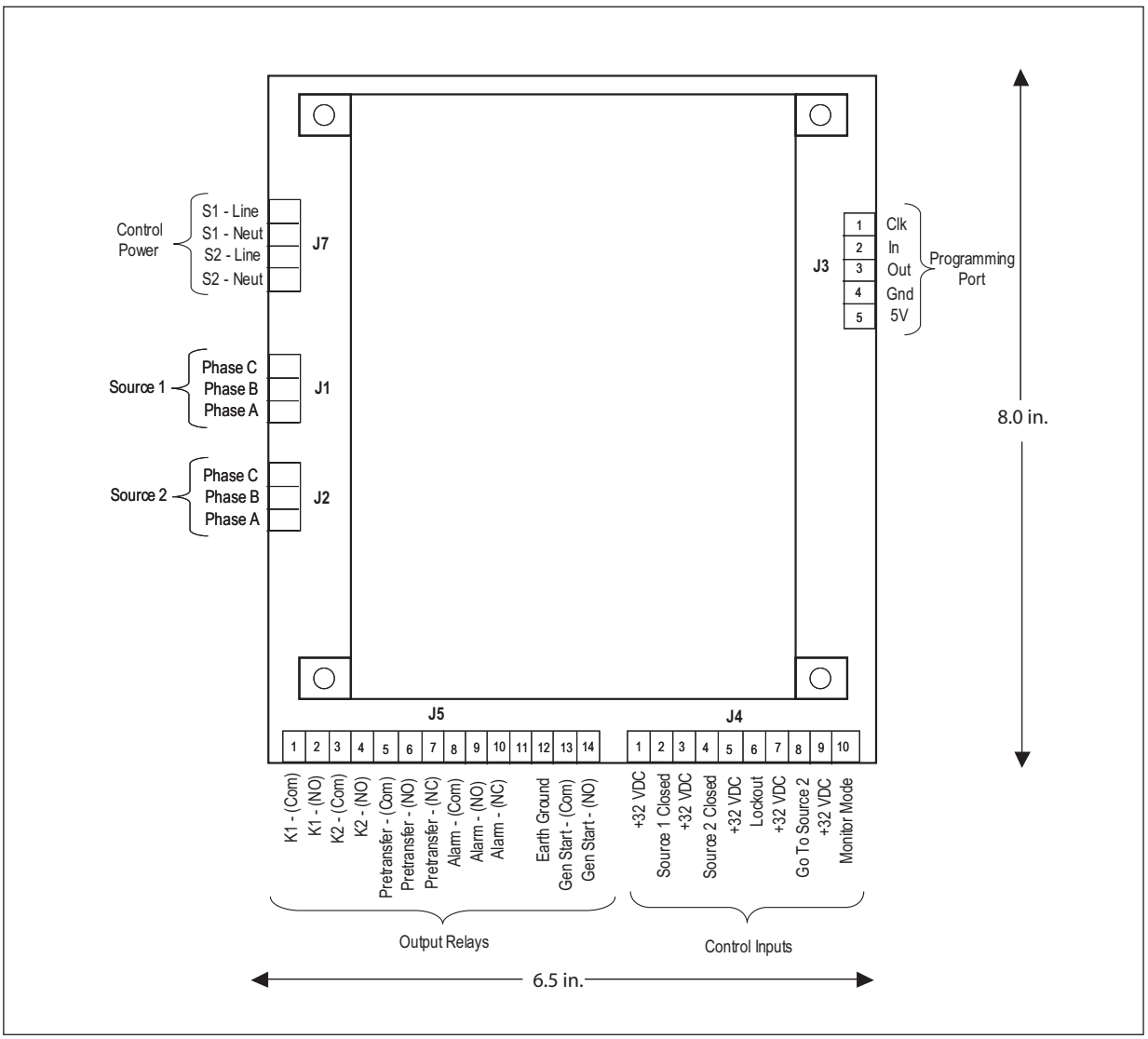

Figure 4. Connectors on the ATC-300 Controller.

Katolight Service - Master Repair Manual - Page 3953

The S1 device Alarm will occur if the switch is commanded to go from S1 to S2 and the S1 connected input is NOT removed within 6 seconds after the command to transfer. The S1 device Alarm will also occur if the switch is commanded to go from S2 to S1 and the S1 connected input is NOT connected within 6 seconds after the command to transfer from the neutral position. That is the K2 relay closes AFTER TDNE or after TD PRE-TRAN times out, if the S1 connected input is NOT opened within 6 seconds the K2 relay will open and an S1 device error message, "SOURCE 1 DEVICE", will be displayed.

A typical transfer request will begin with an S1 outage (S1 becomes unavailable per the programmed setpoints), Engine Test, or Plant Exercise function. After TDES, if programmed, counts down, the Generator Start contact will close. For a Plant Exercise or Engine Test, the S2 available light MUST become available within 90 seconds or the generator start contacts will reopen. Once S2 meets the requirements to be considered available, then TDNE, if programmed, will time down. TD PRE-TRAN will time down if programmed and if S1 is available (Engine Test or Plant Exercise). The K2 relay will energize. The S1 connected input MUST open within 6 seconds (see above). K2 will open IF TDN is programmed. TDN will then time down and K2 will energized until the S2 connected input is closed (this MUST happen within 6 seconds of K2 closure or the S2 device alarm will trigger and the K2 relay will deenergize). Once the S2 connected input is satisfied, K2 will open.

When S1 returns and becomes available per the programmed setpoints, TDEN, if programmed, will time out. TD PRE-TRAN, if programmed, will time out. K1 will energize for no longer than 6 seconds or until the S2 connected input is removed. If the 6 seconds times out, then an S2 device Alarm will trigger and K1 will open. Once the input is removed, then K1 will open if TDN is programmed. TDN will time down and K1 will reclose until the S1 input is satisfied, but for no longer than 6 seconds. If the 6 seconds is reached, then an S1 device Alarm will be triggered and the K1 relay will open. If the S1 connected input is satisfied, then K1 will open and TDEC will time down and open the engine start contact.

The Go To Source 2 input (normally closed, open to initiate) causes the Engine Start contacts to close. Once the S2 sensing satisfies the setpoints programmed, then a transfer is initiated. The transfer functions as described above. The controller will maintain the Engine Start contacts and the S2 connected as long as the Go To Source 2 input is maintained. Once it is removed, a retransfer to S1, if S1 is available per the setpoints, will occur and functions as described above. "Go To Source 2" is displayed on the controller.

The Monitor Mode input (normally open, close to initiate) is utilized to put the controller in a "Monitor" only state. No other inputs will affect the operation of the controller when the Monitor Mode input is initiated. The controller will ONLY monitor the voltage and frequency of the S1 and S2 inputs. Changing of the setpoints of the controller MAY be accomplished while in Monitor Mode. All setpoints are accessible and all timers can be reset. "ATS Not In Automatic" is displayed on the controller.

The Lockout input (normally closed, open to initiate) is utilized to place the controller in a state where it will NOT supply any outputs regardless the inputs. It is used to monitor the state of any fault indicating devices. If the fault device trips due to an over current or over load condition, then a contact opening will place the controller in the Lockout state. The Alarm contact will change state when the lockout signal is sensed. "Lockout" is displayed on the controller. The fault indicating device MUST be reset before the controller can be reset or the Alarm will continue to indicate.

Katolight Service - Master Repair Manual - Page 3954

SECTION 5: OPERATION

5.1 General

This section specifically describes the operation and functional use of the ATC-300 Controller. The practical use of and operation within each category will be discussed. In this section, it is assumed that prior sections of this manual were reviewed and that the operator has a basic understanding of the hardware.

5.2 Automatic Mode

The Automatic Mode of the ATC-300 Controller provides for automatic transfer and re-transfer from Source to Source as dictated by the features supplied and their programmed setpoint values. It provides a summary of the ATC-300 Controller intelligence and supervisory circuits that constantly monitor the condition of both the Source 1 and Source 2 power sources, thus providing the required intelligence for transfer operations. These circuits, for example, automatically initiate an immediate transfer of power when the power fails or the voltage level drops below a preset value. Exactly what the ATC-300 Controller will initiate in response to a given system condition depends upon the combination of standard and selected optional features.

5.3 Monitor Mode

Monitor Mode is a special operating mode in which the ATC-300 Controller does not provide control for transfer operations. The ATC-300 will, however, continuously monitor both Source 1 and Source 2 voltages and frequencies.

The ATC-300 will be in Monitor Mode when the "Monitor Mode" control input is in the "Connected" state as described in Section 5.4. While in the Monitor Mode of operation, the ATC-300 LCD Display will display "ATS NOT IN AUTOMATIC".

5.4 Control Inputs

The ATC-300 has five individual input control signals. The inputs are DC wetted with the unregulated DC supply and appropriate current limiting to provide a nominal current of 10 mA per channel.

5.4.1 Control Input Descriptions

The Control Input "State" definitions are as follows.

Connected - When the input is shorted by an external contact or connection.

Unconnected - When the input is NOT shorted by an external contact or connection.

The Control Input operations are defined as follows.

Source 1 Closed

When this input is in the "Connected" state, it indicates to the ATC-300 Controller that the Source 1 device is closed. When this input is in the "Unconnected" state, it indicates to the ATC-300 that the Source 1 device is open. This input is typically wired to the Source 1 device auxiliary contact that is closed when the Source 1 device is closed. The "Source 1 Closed" input is always enabled.

Source 2 Closed

When this input is in the "Connected" state, it indicates to the ATC-300 Controller that the Source 2 device is closed. When this input is in the "Unconnected" state, it indicates to the ATC-300 that the Source 2 device is open. This input is typically wired to the Source 2 device auxiliary contact that is closed when the Source 2 device is closed. The Source 2 input is always enabled.

Lockout

When the "Lockout" input is in the "Unconnected" state, the ATC-300 Controller will not permit an automatic transfer operation. When the "Lockout" input is in the "Unconnected" state, the LCD Display will be active continuously. It will read "Lockout" on Line 2 of the LCD Display screen immediately, regardless of any controller or switching device operation. When the "Lockout" input is in the "Connected" state and the Alarm is reset, the ATC-300 will permit automatic transfer operation. This input is typically wired to the normally closed Source 1 and Source 2 device alarm contact that opens when one of the devices has tripped due to a fault current. The "Lockout" input is selectable as enabled or disabled via factory control only.

Go To Source 2

When the "Go to Source 2" input is in the "Connected" state, the ATC-300 Controller is be in a normal, automatic operation mode. When the "Go To Source 2" input is in the "Unconnected" state, the ATC-300 controller will initiate a generator start and then transfer to the Source 2 power source. The ATC-300 will maintain the connection to Source 2 until the input changes to the "Connected" state, upon which it will initiate a re-transfer to the Source 1 power source. When the "Go To Source 2" input is in the "Unconnected" state, the LCD Display will be active continuously. Active time delays will be constantly displayed on Line 1, with real-time remaining countdown to zero status. It will constantly read "Go To Source 2" on Line 2 of the LCD Display. This operation is "failsafe". The "Go To Source 2" input is always enabled. The "Go To Source 2" input does not have a user accessible programmable setpoint for enable or disable.

Monitor Mode

When the "Monitor Mode" input is in the "Unconnected" state, operation of the ATC-300 Controller will not be effected. When the "Monitor Mode" input is in the "Connected" state, the ATC-300 will monitor the Source 1 and Source 2 voltages and frequencies but will not provide any control capabilities. When the "Monitor Mode" input is in the "Connected" state, the ATC-300 LCD Display will be active continuously and will constantly read "ATS" on Line 1 and "NOT IN AUTOMATIC" on Line 2 of the LCD Display. The "Monitor Mode" input is selectable as enabled or disabled via factory control. The "Monitor Mode" input does not have a user accessible programmable setpoint for enable or disable. This is NOT a "failsafe" operation.

5.5 Output Relay

The primary control outputs of the ATC-300 Controller are dry relay contacts. These relays are comprised of one latching "Form A" relay to provide the generator start contacts, and four conventional coil "Form C" relays (two of which implement only the Form A contact) necessary to complete the electrical control function. Since the outputs were tested per the UL 1008 Dielectric Test, the dielectric rating for each output is a minimum of 1500 Vac. The output relays are pulsed to eliminate error caused by software "races" between Lockout and Source 1 or Source 2 Closed inputs.

The latched coil relay is UL/CSA rated at 5 A, 1/6 HP, 250 Vac. The DC rating is 5 A, 30 Vdc, with a 150 W maximum

Katolight Service - Master Repair Manual - Page 3955

load. The remaining conventional relays are UL/CSA rated at 10 A, 1/3 HP, 250 Vac. The DC rating is 10 A at 30 Vdc.

Note: The ATC-300 Controller MUST BE properly grounded at J-5, Pin 12 for proper operation.

The Output Relay functions are divided into two categories:

- Customer Connections and
- Transfer Operation Contacts.

5.5.1 Output Relay Descriptions

Specifically the relay functions are as follows.

5.5.1.1 Customer Connections

CAUTION

THE ATC-300 CONTROLLER MUST BE PROPERLY GROUNDED AT J-5, PIN 12 FOR PROPER OPERATION.

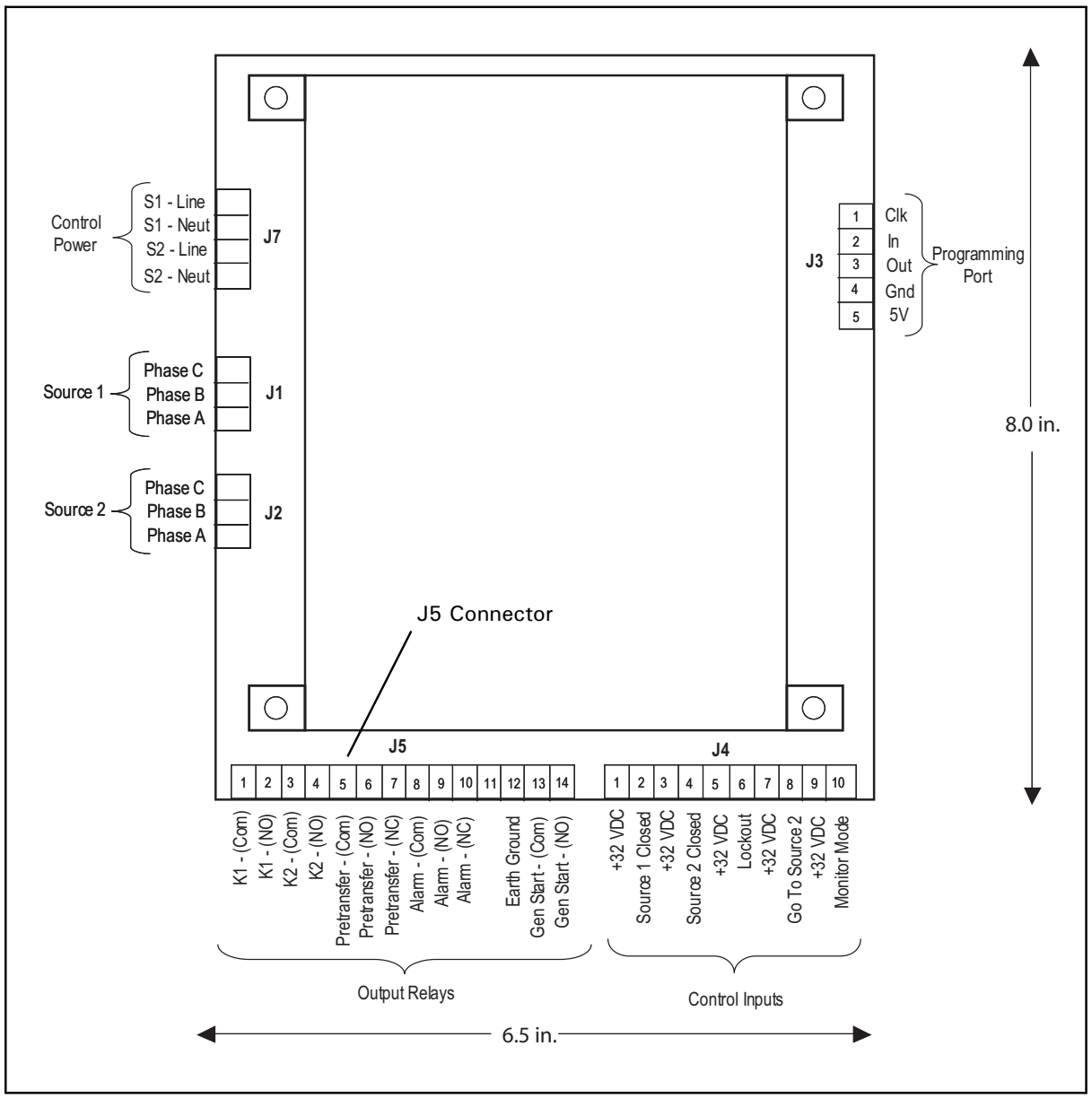

Figure 5. J-5 Connector Output Relay Connections.

Katolight Service - Master Repair Manual - Page 3956

Generator Start Relay

This latching relay is the generator start relay for system configurations that employ a generator as the Source 2 power source. This relay provides a Form A contact of silver alloy with gold flashing for closure of the generator start circuit.

The Form A contact is implemented with the Common Pin (J-5, Pin 13) and the Normally Open Pin (J-5, Pin 14). The generator start relay contacts are rated for 5 A, 1/6 HP @ 250 Vac. The DC rating is 5 A @ 30 Vdc with a 150 W maximum load.

Alarm Relay

The alarm relay is de-energized to indicate an absence of an alarm state and energized to indicate the presence of an alarm condition. Alarm conditions include the following.

1. Improper circuit breaker operation (breaker fails to open or close within six [6] seconds)
2. Motor operator failure
3. Lockout
4. Failsafe condition
5. Aborted engine test due to Source 2 unavailability
6. Aborted plant exerciser test due to Source 2 unavailability
7. Unsuccessful in-phase transition

The alarm relay will remain energized until "Alarm Reset" is pressed.

The full Form C contact of this relay may be wired to an alarm annunciator panel to indicate a problem with the ATS. The full Form C contact of this relay is implemented with the Common Pin (J-5, Pin 8), the Normally Closed Pin (J-5, Pin 10), and Normally Open Pin (J-5, Pin 9). The alarm relay contacts are rated for 10 A, 1-3 HP @ 250 Vac. The DC rating is 10A @ 30 Vdc.

Pre-transfer Relay

This Form C relay opens/closes on a timed basis (adjustable from 1 to 120 seconds) prior to the transfer operation between two available sources to allow the load to be de-energized prior to transfer in either direction. After TDNE/TDEN times out, this relay energizes and the Pre-transfer timer (TD PRE-TRAN) starts timing. After TD PRE-TRAN times out, the transfer proceeds. The pre-transfer relay de-energizes after the transfer is complete.

The full Form C contact of this relay is implemented with the Common Pin (J-5, Pin 5), the Normally Closed Pin (J-5, Pin 7), and the Normally Open Pin (J-5, Pin 6). The pre-transfer relay contacts are rated for 10 A, 1-3 HP @ 250 Vac. The DC rating is 10 A @ 30 Vdc.

5.5.1.2 Transfer Operations Connections

K1 and K2 are factory wired to operate the transfer switch. The relay contacts for each are rated for 10 A, 1/3 HP @ 250 Vac. The DC rating is 10 A @ 30 Vdc.

Note: The ATC-300 Controller MUST BE properly grounded at J-5, Pin 12 for proper operation.

Output Relay K1

This Form C relay is used for control of the transfer mechanism. Only the Form A contact is available for connection.

This Form A output is used for control of the transfer switch motor to close the Source 1 device (i.e. circuit breaker) for motor-operator transfer switches. The K1 relay momentarily energizes until the ATC-300 senses that the Source 1 device is closed, then K1 de-energizes. The K1 outputs are Common Pin (J-5, Pin 1) and Normally Open Pin (J-5, Pin 2).

Output Relay K2

This Form C relay is used for control of the transfer mechanism. Only the Form A contact is available for connection.

This Form A output is used for control of the transfer switch motor to close the Source 2 device (i.e. circuit breaker) for motor-operator transfer switches. The K2 relay momentarily energizes until the ATC-300 senses that the Source 2 device is closed, then K2 de-energizes. The K2 outputs are Common Pin (J-5, Pin 3) and Normally Open Pin (J-5, Pin 4).

5.6 Operating Voltage and Measurements

The ATC-300 Controller operates with control power from 65 to 145 Vac. The ATC-300 operates on single and three phase systems with selectable frequency settings of 50 or 60 Hz depending on the system ordered.

The ATC-300 can perform the time delay engine start function without control power. This is accomplished by the use of a supercap and a latching control relay. The supercap stays charged for several minutes to power the logic circuitry that provides the start pulse to the latching control relay. The latching control relay, which controls the generator, only changes state when it receives start or stop pulses. The coil voltage for the latching relay comes from another capacitor that also stays charged for several minutes.

The ATC-300 Controller operates directly from the line sensing inputs of the Source 1 and Source 2 power sources. The nominal operating system inputs are from 120 to 600 Vac. The standard system assumes that neutral is available and that the transfer motor can therefore be powered from an available 120 Vac source. If a neutral conductor is not available, a 120 Vac supply is created by an external transformer.

All voltage monitoring and measurements are true RMS measurements.

5.7 Engine Test

The Engine Test is intended to permit the periodic performance of tests of the system. The exact test conditions are determined by the programmed setpoints. The operator-selected parameters include setting the engine run time and the Test Mode. Refer to Table 2 for test programming details.

There are three test modes:

0 No Load Engine Test;

1 Load Engine Test; or

2 Disabled.

The factory default is set to 1 - Load Engine Test

Note: If the Source 2 power source is not programmed as a generator, this function will be inactive.

Katolight Service - Master Repair Manual - Page 3957

NOTICE

IF THE ATS IS UNABLE TO PROCESS A ENGINE TEST REQUEST DUE TO THE ATS STATUS, THE REQUEST IS IGNORED.

When the Engine Test pushbutton is pressed, the following message will appear on the LCD Display:

Line 1: Password 0 0 0 0 Line 2: Use Inc/Dec & Step

After entering the 4-digit password and pressing the Step/Enter pushbutton, the ATC-300 will display the Time Delay on Engine Starting (TDES) timer countdown. Once the TDES countdown reaches zero, the ATC-300 Controller will initiate an engine start. The engine run duration will be per the Engine Run Test Time setpoint.

If the (0) No Load Engine Test Mode has been selected, the transfer from Source 1 to Source 2 will not occur. If the (1) Load Engine Test Mode has been selected, the transfer from Source 1 to Source 2 will occur after the generator output has reached the specified setpoints. If the (2) Disabled Mode has been selected, or if the "Number of Generators" setpoint is programmed to zero, the Engine Test will not occur.

All enabled and programmed time delays will be performed per the setpoints during an engine test. The time delays will appear on the LCD Display with "countdown to zero" when active. Depending on the setpoints and the optional features selected with the ATC-300 Controller, these can include:

- TDES;
- Time Delay Normal to Emergency (TDNE);
- Time Delay Emergency to Normal (TDEN);
- Time Delay for Engine Cooldown (TDEC);
- Time Delay Neutral (TDN); and
- Pre-transfer Delay Signal (TD PRE-TRAN).

All operations are "Failsafe", that is they prevent disconnection from the only available power source and also force a transfer or re-transfer operation to the only available power source.

During an engine test, if the Engine Test pushbutton is pressed a second time before the Engine Test is complete and correct password has been entered; the Engine Test will be terminated. An engine test may also be aborted in the following ways:

1. If the Emergency Source does not become available within 90 seconds of the ATC-300 providing the engine start command;
2. If, during the TDNE countdown, the Emergency Source goes unavailable more than three times (Each time, TDNE will restart);
3. If the Emergency Source is powering the load and it goes unavailable for more than the TDEF setting; and
4. If the Normal source becomes unavailable.

When an engine test is aborted due to an unavailable source during TDNE countdown, the Alarm relay will energize, a "TEST ABORTED" message with appear on the display, and the event will be logged into the Transfer History as "Aborted Test".

5.8 Plant Exerciser

NOTICE

THE PLANT EXERCISER FEATURE ALLOWS FOR AUTOMATIC PROGRAMMING OF THE DESIRED TEST CYCLE ON A DAILY, 7-DAY, 14-DAY, OR 28-DAY BASIS. IF THE ATS IS UNABLE TO PROCESS A PLANT EXERCISER REQUEST DUE TO THE ATS STATUS, THE REQUEST IS IGNORED.

The plant exerciser is a feature that provides an automatic test of the generator. The test can be run daily, every 7 days, every 14 days, or every 28 days with durations equal to the programmed engine test time. Two optional modes of plant exercising are available:

- No Load Exercise; and
- Load Exercising with "Failsafe".

The ATC-300 Controller allows the user to program the exact day, hour, and minute that the Plant Exercise will occur. This allows for the Plant Exercise to take place at the most opportune time for the specific facility.

The hour and minute that the Plant Exerciser is performed are programmed with the "PE HOUR" and "PE MINUTE" setpoints where "PE HOUR" is in military time (1:00 PM = 13:00) and the "PE MINUTE" can be set from 0 to 59. The test day is programmed with the "PE DAY" setpoint. The ATC-300 Controller compares the "PE DAY" setpoint with the "WEEKDAY" setting, which is set along with the time and date. If a 7-day plant exercise is programmed, the selections are from "1 SUN" through "7 SAT".

If a 14-day plant exercise is programmed, the "PE DAY" setpoint can be set from "1 SUN" to "14 SAT" where "1 SUN" is the first Sunday of the 14-day period and "14 SAT" is the second Saturday of the 14-day period.

If a 28-day plant exercise is programmed, the "PE DAY" setpoint can be set from "1 SUN" to "28 SAT" where "1 SUN" is the first Sunday of the 28-day period and "28 SAT" is the fourth Saturday of the 28-day period.

If desired, the Plant Exerciser can be disabled by choosing "OFF" for the "Plant Exer-" setpoint.

Plant Exercising in the Load Exercising Mode is "Failsafe". If the generator fails during testing for any reason, the ATC-300 will signal the transfer switch to return to the Source 1 power source. The ATC-300 will display "FAILSAFE" until a pushbutton is pressed.

5.9 In-phase Transition (Optional Feature 32E)

The In-Phase Transition capability permits a transfer or re-transfer only between 2 available sources that have a phase angle difference of eight degrees or less. The In-Phase transition feature includes user selectable enable/disable and permissible frequency difference setpoints. The ATC-300 Controller will display "SYNC TIME" and the active timer on Line 1 of the LCD display. In the event Source 1 and Source 2 fail to synchronize within the sync time, the Alarm relay will energize and "Failed to Sync" will be displayed on Line 1. After resetting the alarm, another in-phase transition may be attempted or a non-synchronized transfer may be initiated by failing the connected source. The adjustable frequency difference is 0.0 to 3.0 Hz.

Katolight Service - Master Repair Manual - Page 3958

In-phase transition is an open transition with both sources in-phase. An anticipatory scheme is used for controlling the circuit breakers. The advance angle is calculated based on the frequency difference between the two sources and also the response time of the breaker. This results in the optimum reconnect angle of 0 degrees for all of the frequency difference values.

Both sources must be available and the frequency difference must be less than the in-phase transition frequency difference setpoint (0.0 to 3.0 Hz). When these conditions are met, the ATC-300 Controller will monitor the phase difference between the two sources. The synchronization timer will count down and be displayed as "SYNC TIME" while waiting for synchronization to be detected. When the phase difference is within the advance angle window, the "transfer" command is given. This is an open transition but both sources will be in-phase when the transfer occurs.

If the synchronization does not occur within a specified amount of time, the Alarm relay will energize and the failure will be logged into the Transfer History as either "Sync Fail - Freq" or "Sync Fail - Phase" depending on whether the frequency difference or the phase difference was excessive.

5.10 Program Mode

The ATC-300 Controller is fully programmable from the device's faceplate once the Password has been correctly entered. Any operator associated with programming the ATC-300 Controller will quickly discover that ATC-300 programming is just a matter of simple, repetitive steps. However, because of the importance placed on this function and its critical relationship to the proper functioning of the system, Section 6 of this manual is dedicated to the Program Mode. Refer to that section and Table 2 for details.

SECTION 6: PROGRAMMING

6.1 Introduction

NOTICE

ALTHOUGH ALL ATC-300 CONTROLLER PROGRAMMABLE FEATURES ARE ADDRESSED IN THIS SECTION, ONLY THOSE ORDERED BY THE CUSTOMER AND INITIALLY PROGRAMMED AT THE FACTORY WILL APPEAR IN THE DISPLAY FOR PROGRAMMING CHANGES IN THE FIELD.

The ATC-300 Controller is fully programmable from the device's faceplate or remotely through the communications port. Users can reprogram setpoints as well as other parameters. The time, date, and setpoints can only be changed while the device is in the Program Mode.

Program Mode is achieved by entering a valid password when prompted by the Setpoints screens. The Unit Status LED will blink at a faster rate when viewing the setpoints while in Program Mode.

NOTICE

WHILE IN THE PROGRAM MODE, THE ATC-300 CONTROLLER IS NEVER OFF-LINE AND CONTINUES TO FUNCTION IN ACCORDANCE WITH PREVIOUSLY PROGRAMMED SETPOINTS.

6.2 Password

To enter the Program Mode, the ATC-300 Controller requires a password to prevent unauthorized persons from modifying setpoint values.

There are five screens related to the password, which is a four-digit number from 0000 to 9999.

1.

VIEW SETPOINTS?	YES

Use the Increase or Decrease pushbuttons to select Yes, then use the Step/Enter pushbutton to enter the selection and move to the next screen

2.

CHANGE SETPOINTS?	YES

Use the Increase or Decrease pushbuttons to select Yes or No, then use the Step/Enter pushbutton to enter the selection and move to the next screen. If No is selected, the user will be able to review the setpoints but not make any changes. If Yes is selected, the Password screen will appear.

3.

PASSWORD (Use Inc/Dec)	0000

Use the Increase or Decrease keys to scroll to the desired value (0 - 9) for the first digit, then use the Step/Enter key to enter the value and move to the next digit. Repeat for remaining three digits. After all four numerals of the password are entered, press the Step/Enter pushbutton to enter the password and proceed to the next screen. If an invalid password is entered, the LCD Display shall read "Invalid Password" and the user must press the Step/Enter pushbutton to initiate another password entry sequence.

Note: The factory default password is "0300". If the password is forgotten, contact the factory for the backdoor password.

Katolight Service - Master Repair Manual - Page 3959

4.

CHANGE PASSWORD?	YES

Use the Increase or Decrease pushbuttons to select Yes or No, then use the Step/Enter pushbutton to enter the selection and move to the next screen. If No is selected, the first Setpoint screen will appear. If Yes is selected, the following screen will appear.

5.

NEW PASSWORD (Use Inc/Dec)	0000

Use the Increase or Decrease pushbuttons to scroll to the desired value (0 - 9) for the first digit of the new password, then use the Step/Enter pushbutton to enter the value and move to the next digit. Repeat for remaining three digits.

The user then steps through the setpoint screens and can change the setpoint values. During this time, the Unit Status LED will blink at a faster rate. At the end of the setpoint screens, the user will be prompted to save the setpoints.

6.3 Display Only Mode

In the Display Only Mode, the ATC-300 Controller allows the user to view all setpoints and their programmed values. Each press of the Step/Enter pushbutton will advance the program to the next setpoint. Setpoint values CANNOT be changed while in the Display Only Mode.

6.4 Change Setpoints Mode

In the Change Setpoints Mode, the user can step through the Setpoint screens and change the Setpoint values using the Increase and Decrease pushbuttons. During this time, the Unit Status LED will blink at a faster rate to indicate Program Mode. At the end of the setpoint screens, the LCD Display will read Save Setpoints? Either the Increase or Decrease pushbutton may be used to select either Yes or No". The Step/Enter pushbutton is then pressed to enter the selection. If Yes is selected at the Save Setpoints? Screen, the ATC-300 shall save the Setpoint settings and the LCD Display shall read Programming Setpoints to confirm entry. If "No" is selected, then all Setpoints will remain unchanged.

6.5 Programmable Features and Setpoints

CAUTION

CHANGING THE SYSTEM NOMINAL VOLTAGE OR FREQUENCY SETPOINT WILL AUTOMATICALLY CHANGE ALL THE PICKUP AND DROPOUT SETTINGS TO THE NEW DEFAULT VALUES.

All ATC-300 Controller programmable features and associated setpoint possibilities with any required explanations are presented in Table 2. Remember that only features originally ordered and factory programmed will appear in the display.

Katolight Service - Master Repair Manual - Page 3960

The following setpoints are programmable if the corresponding feature is programmed.

Table 2. Programmable Features and Setpoints

Setpoint	Optional Feature	Setpoint Units	Description	Range	Factory Default
New Password		Four Digits	Set New Password	0000 to 9999	0300
TDES		Minutes: Seconds	Time Delay Engine Start	0 to 120 seconds	0:03
TDNE		Minutes: Seconds	Time Delay Normal to Emergency	0 to 1800 seconds	0:00
TDEN		Minutes: Seconds	Time Delay Emergency to Normal	0 to 1800 seconds	5:00
TDEC		Minutes: Seconds	Time Delay Engine Cool-off	0 to 1800 seconds	5:00
NOM FREQ		Hertz	Nominal Frequency	50 or 60 Hz	As ordered
NOM VOLTS		Volts	Nominal Voltage	120 to 600 volts	As ordered
S1 UV DROP		Volts	Source 1 Undervoltage Dropout	97% to 50% of NOMV	80% of NOMV in volts
S2 UV DROP		Volts	Source 2 Undervoltage Dropout	97% to 50% of NOMV	80% of NOMV in volts
S1 UV PICK		Volts	Source 1 Undervoltage Pickup	99% to (1UVD + 2%)	90% of NOMV in volts
S2 UV PICK		Volts	Source 2 Undervoltage Pickup	99% to (2UVD + 2%)	90% of NOMV in volts
S1 OV DROP	X	Volts	Source 1 Overvoltage Dropout	105% to 120%	115% of NOMV in volts
S2 OV DROP	X	Volts	Source 2 Overvoltage Dropout	105% to 120%	115% of NOMV in volts
S1 OV PICK	X	Volts	Source 1 Overvoltage Pickup	(1OVD - 2%) to 103%	110% of NOMV in volts
S2 OV PICK	X	Volts	Source 2 Overvoltage Pickup	(2OVD - 2%) to 103%	110% of NOMV in volts
S1 UF DROP	X	Hertz	Source 1 Underfrequency Dropout	90% to 97% of NOMF	94% of NOMF in hertz
S2 UF DROP		Hertz	Source 2 Underfrequency Dropout	90% to 97% of NOMF	94% of NOMF in hertz
S1 UF PICK	X	Hertz	Source 1 Underfrequency Pickup	(1UFD + 1Hz) to 99%	96% of NOMF in hertz
S2 UF PICK		Hertz	Source 2 Underfrequency Pickup	(2UFD + 1Hz) to 99%	96% of NOMF in hertz
S1 OF DROP	X	Hertz	Source 1 Overfrequency Dropout	103% to 110% of NOMF	106% of NOMF in hertz
S2 OF DROP	X	Hertz	Source 2 Overfrequency Dropout	103% to 110% of NOMF	106% of NOMF in hertz
S1 OF PICK	X	Hertz	Source 1 Overfrequency Pickup	(1OFD - 1Hz) to 101%	104% of NOMF in hertz
S2 OF PICK	X	Hertz	Source 2 Overfrequency Pickup	(2OFD - 1Hz) to 101%	104% of NOMF in hertz
TDN		Minutes: Seconds	Time Delay Neutral	0 to 120 seconds	0:00
PLANT EXER		Days	Plant Exerciser Programming	OFF, DAILY, 7-DAY, 14-DAY or 28 DAY	OFF
PE LOAD XFR			Plant Exerciser Load Transfer	0 or 1 (1 = yes)	0
PE DAY		Days	Plant Exerciser Day of the Week	SUN, MON, TUE, WED, THU, FRI or SAT	
PE HOUR		Hours	Plant Exerciser Hour	0 to 23	0
PE MINUTE		Minutes	Plant Exerciser Minute	0 to 59	0
TEST MODE			Test Mode	0, 1 or 2 (0 = No Load Engine Test, 1 = Load Engine Test, 2 = Disabled)	0
TER		Minutes	Engine run test time	0 min to 600 min	5:00
TPRE		Seconds	Pretransfer delay timer	0 sec to 120 sec	0:00
PHASES			Three phase or single phase	1 or 3	AS ORDERED
VOLT UNBAL	X	Volts	Voltage Unbalanced	0 or 1 (1 = Enabled)	1
UNBAL DROP %	X	Percent	Percent for Unbalanced Voltage Dropout	5 to 20% of Phase to Phase Voltage Unbalance	20%
UNBAL PICK %	X	Percent	Percent for Unbalanced Voltage Pickup	Dropout minus (UNBAL DROP % -2) to 3%	10%
UNBAL DELAY	X	Seconds	Unbalanced Delay Timer	10 to 30	20
TDEF		Seconds	Time Delay Emergency Fail Timer	0 sec to 6 sec	0:06
IN-PHASE	X		In-phase Transition	0 or 1 (1 = Enabled)	0
IP FREQ DIFF	X	Hertz	In-phase Transition Frequency Difference	0.0 Hz to 3.0 Hz	1
SYNC TIME	X	Minutes	In-phase Transition Synchronization Timer	1 min to 60 min	5
PHASE REV	X		Phase Reversal	OFF, ABC, or CBA	OFF

Katolight Service - Master Repair Manual - Page 3961

Table 2 Programmable Features and Setpoints (Cont.)

Setpoint	Optional Feature	Setpoint Units	Description	Range	Factory Default
DST ADJUST			Day Light Savings	0 or 1 (1 = Enabled)	1
LANGUAGE			Selected Language	English, French, Spanish, or Dutch	English
CHANGE TIME/DATE?			Set Time and Date		
		Hours	Set Hour	0 to 23	Eastern Standard Time
		MINUTES	Set Minute	0 to 59	Eastern Standard Time
		WEEKDAY	Set Weekday	SUN, MON, TUE, WED, THU, FRI or SAT	Eastern Standard Time
		MONTH	Set Month	JAN or 01	Eastern Standard Time
		DAY	Set Day	1 to 31	Eastern Standard Time
		YEAR	Set Year	Current Year	Eastern Standard Time
RESET SYSTEM COUNTERS?				Yes or No	No
RESET ALL?			Resets all System Counters	Yes or No	No
RESET ENGINE RUN?		Hours	Resets ENGINE RUN Counter	0 to 9999	XXXX
RESET S1 CONN		Hours	Resets S1 CONN Counter	0 to 9999	XXXX
RESET S2 CONN		Hours	Resets S2 CONN Counter	0 to 9999	XXXX
RESET S1 AVAIL		Hours	Resets S1 AVAIL Counter	0 to 9999	XXXX
RESET S2 AVAIL		Hours	Resets S2 AVAIL Counter	0 to 9999	XXXX
RESET LOAD ENERG		Hours	Resets LOAD ENERG Counter	0 to 9999	XXXX
RESET TRANSFERS		Hours	Resets TRANSFERS Counter	0 to 9999	XXXX
SAVE SETPOINTS?			Save Changed Setpoints	Yes or No	Yes

See tables in the appendix for Voltage and Frequency Pickup and Dropout settings.

Katolight Service - Master Repair Manual - Page 3962

SECTION 7: TROUBLESHOOTING AND MAINTENANCE

7.1 Level of Repair

This manual is written with the assumption that only ATS troubleshooting will be performed. If the cause of malfunction is traced to an ATC-300, the unit should be replaced with a new unit. The malfunctioning unit should then be returned to EATON Electrical for factory repairs.

7.2 ATC-300 Controller Troubleshooting

The Troubleshooting Guide (Table 3) is intended for service personnel to identify whether a problem being observed is external or internal to the unit. For assistance with this determination, contact EATON Electrical. If a problem is identified to be internal, the unit should be returned to the factory for replacement.

Table 3. Troubleshooting Guide

Symptom	Probable Cause	Possible Solution(s)
All front panel indicator LED's are off.	Control power is deficient or absent.	Verify that control power is connected at J7 and that it is within specifications.
	ATC-300 is malfunctioning.	Replace the unit.
"Unit Status" LED is not blinking.	Control power is deficient or absent.	Verify that control power is connected at J7 and that it is within specifications.
	ATC-300 is malfunctioning.	Replace the unit.
One or more voltage phases read incorrectly.	Incorrect wiring.	Verify voltage with multimeter. Check wiring. Replace the unit.
	ATC-300 is malfunctioning.	Verify ground connection at J-5, Pin 12
Front panel pushbuttons do not work.	Bad connection inside the ATC-300.	Replace the unit.
Unit did not accept new setpoints via front panel.	Operator error.	Enter the correct Password and change the setpoints.
	No pushbuttons pressed for 2.5 minutes.	Avoid intervals of 2.5 minutes of inactivity with pushbuttons when changing setpoints.
Source 1 or Source 2 is not available when it should be.	Voltage and/or frequency are not within setpoint values.	Verify voltage and/or frequency with multimeter. Check the programmed setpoint values.
Unit displays "LOCK-OUT".	Circuit breaker tripped.	Check for a overload/short circuit condition
	Lockout circuit wiring problem.	Check lockout circuit wiring.
Unit displays "SOURCE 1 DEVICE".	Source 1 breaker/contactor did not open when it was commanded to open (within 6 seconds).	Check the Source 1 circuit breaker shunt trip (ST) wiring.
	Source 1 breaker/contactor did not close when it was commanded to close (within 6 seconds).	Check the Source 1 circuit breaker spring release (SR) wiring.
	Source 1 closed contacts did not open when Source 1 breaker opened (within 6 seconds).	Check the Source 1 closed control input wiring on J-4, Pins 1 and 2.
	Source 1 closed contacts did not close when Source 1 breaker closed (within 6 seconds).	Check the Source 1 closed control input wiring on J-4, Pins 1 and 2.
Unit displays "SOURCE 2 DEVICE".	Source 2 breaker/contactor did not open when it was commanded to open (within 6 seconds).	Check the Source 2 circuit breaker shunt trip (ST) wiring.
	Source 2 breaker/contactor did not close when it was commanded to close (within 6 seconds).	Check the Source 2 circuit breaker spring release (SR) wiring.
	Source 2 closed contacts did not open when Source 2 breaker opened (within 6 seconds).	Check the Source 2 closed control input wiring on J-4, Pins 3 and 4.
	Source 2 closed contacts did not close when Source 2 breaker closed (within 6 seconds).	Check the Source 2 closed control input wiring on J-4, Pins 3 and 4.

Katolight Service - Master Repair Manual - Page 3963

Table 3. Troubleshooting Guide (Cont.)

Symptom	Probable Cause	Possible Solution(s)
Unit will not perform an Engine Test.	Engine Test pushbutton was not pressed.	Press the Engine Test pushbutton to initiate the test.
	Display is not displaying the Home screen before initiating the test.	Use the Step/Enter pushbutton to step to the Home screen. If a timer is timing down, wait until it is done.
	Engine Test setpoint is set to Disable (Value of "2").	Re-program the Engine Test setpoint.
	Number of generators setpoint is set to 0.	Re-program the number of generators setpoint.
	Generator became unavailable when connected to the load.	Increase the Time Delay Emergency Fail (TDEF) timer setpoint.
	Generator became unavailable before connecting to the load.	Check the generator for proper function.
	Generator voltage and/or frequency did not become available within 90 seconds of engine starting.	Verify the voltage and/or frequency with a multimeter. Check the programmed setpoint values. Check the engine maintenance.
Plant Exerciser failed to exercise.	Incorrect date or time setting.	Verify real time clock settings for the time and date.
	Incorrect setpoint programmed for the PE DAY, PE HOUR, and/or PE MINUTE.	Re-program the PE DAY, PE HOUR, and/or PE MINUTE setpoint.
	Generator voltage and/or frequency did not become available within 90 seconds of engine starting.	Verify the voltage and/or frequency with a multimeter. Check the programmed setpoint values. Check the engine maintenance.
	Generator became unavailable when connected to the load.	Increase the TDEF timer setpoint.
	Generator became unavailable before connecting to the load.	Check the generator for proper function.
Engine fails to start after the TDES times out.	Incorrect wiring.	Check the wiring between the Gen Start relay (J-5, Pins 13 and 14) and the engine.
	Gen Start relay contacts are not closed.	Replace the unit.
	Engine did not start.	Check the generator for proper function.

7.3 ATC-300 Replacement

Follow these procedural steps to replace the ATC-300.

Step 1: Turn off the control power at the main disconnect or isolation switch of the control power supply. If the switch is not located within view from the ATC-300, lock it out to guard against other personnel accidentally turning it on.

Step 2: Verify that all "foreign" power sources wired to the ATC-300 are de-energized. These foreign power sources may also be present on some of the terminal blocks.

Step 3: Before disconnecting any wires from the unit, make sure they are individually identified to assure that reconnection can be correctly performed. Make a sketch to help with the task of terminal and wire identification.

Step 4: Remove all wires and disconnect plug-type connectors.

⚠ CAUTION

SUPPORT THE ATC-300 FROM THE REAR WHEN THE SCREWS ARE LOOSENED OR REMOVED IN STEP 5. WITHOUT SUCH SUPPORT, THE UNIT COULD FALL OR THE PANEL COULD BE DAMAGED.

Step 5: Remove the four (4) mounting screws, located on the four corners, which hold the unit and trim plate against the door or panel. These are accessed from the front of the unit. Support the unit and remove the two center screws.

Step 6: Remove the unit from the door or panel. Lay the original mounting screws aside for later use.

Step 7: Align the unit with the opening in the door or panel.

Step 8: Using the original mounting hardware, secure the replacement unit to the door or panel.

Step 9: Using the sketch mentioned in Step 3, replace each wire at the correct terminal and make sure each is secure. Make certain that each harness plug is securely seated.

Step 10: Restore control power to the unit.

7.4 Maintenance and Care

The ATC-300 is designed to be a self-contained and maintenance-free unit. The printed circuit boards are calibrated and conformally coated at the factory. They are intended for service by factory-trained personnel only.

Katolight Service - Master Repair Manual - Page 3964

APPENDIX A: DISPLAY MESSAGES FOR STATUS AND TIMERS

Display Message	
TDEC	Countdown cool-off timing before the generator contacts are opened.
TDES	Countdown timing before the generator contacts are closed.
TDNE	Countdown timing before Source 1 is disconnected before transferring to Source 2. Timing begins when Source 2 is available.
TDN	Countdown timing with both sources disconnected from the load.
TDEN	Countdown timing before Source 2 is disconnected before transferring to Source 1. Timing begins when Source 1 becomes available.
TRANSFER	Waiting for the switch to make the transfer from the neutral position to the intended source.
ATS NOT IN AUTOMATIC	Control input for monitor mode is closed.
LOCK-OUT OVERCURRENT TRIP	A trip condition has been detected by either breaker, and the system is locked-out from further transfers.
ENGINE RUN	The engine run test timer is counting down before the test is completed. Pressing the Engine Test pushbutton will abort this timer and the test.
START TEST?	To initiate an engine test sequence, press the Engine Test pushbutton again, or press Increase and Decrease pushbuttons simultaneously to clear.
WAIT FOR S2	Waiting for the Source 2 source voltage and frequency to become available.
TD PRE-TRAN	Countdown timer while waiting for a pre-transfer acknowledge input.
SYNC TIME	Countdown timing in minutes while waiting for sources to synchronize during an in phase transition.
SOURCE 1 DEVICE	Indicates that the Source 1 device (i.e. circuit breaker, contactor) failed to open or close
SOURCE 2 DEVICE	Indicates that the Source 2 device (i.e. circuit breaker, contactor) failed to open or close.
TDEF	Countdown timing before declaring Source 2 unavailable (accounts for momentary generator fluctuations).
TD UNBAL	Countdown timer before declaring a source unavailable due to a voltage unbalance condition.
TEST ABORTED	Indicates that an engine test or plant exercise was aborted after three unsuccessful attempts. Source 2 did not remain available while TDNE was timing.
GO TO SOURCE 2	Indicates that the load is connected to Source 2 because the Go To Source 2 control input is in the “unconnected” state.
FAILSAFE	Indicates that the load was connected to Source 2 but Source 2 became unavailable so the load transferred back to Source 1.
SETPOINTS ERROR	Memory problem with the setpoints. Contact the factory.
OPTIONS ERROR	Memory problem with the factory options. Contact the factory.
PROGRAMMING SETPOINTS	Setpoints are being saved in memory.
WAITING FOR NEUTRAL	Waiting for the neutral position to be reached by the switch.
WAITING FOR S1 TO OPEN	Waiting for the Source 1 device (i.e. circuit breaker, contactor) to open.
WAITING FOR S2 TO OPEN	Waiting for the Source 2 device (i.e. circuit breaker, contactor) to open.
WAITING FOR S1 TO CLOSE	Waiting for the Source 1 device (i.e. circuit breaker, contactor) to close.
WAITING FOR S2 TO CLOSE	Waiting for the Source 2 device (i.e. circuit breaker, contactor) to close.

Katolight Service - Master Repair Manual - Page 3965

APPENDIX B: OPERATIONAL FLOWCHARTS

- Utility - Generator Transfer Switch
- Dual Utility Transfer Switch
- In-phase Transition Implementation

Utility - Generator Transfer Switch

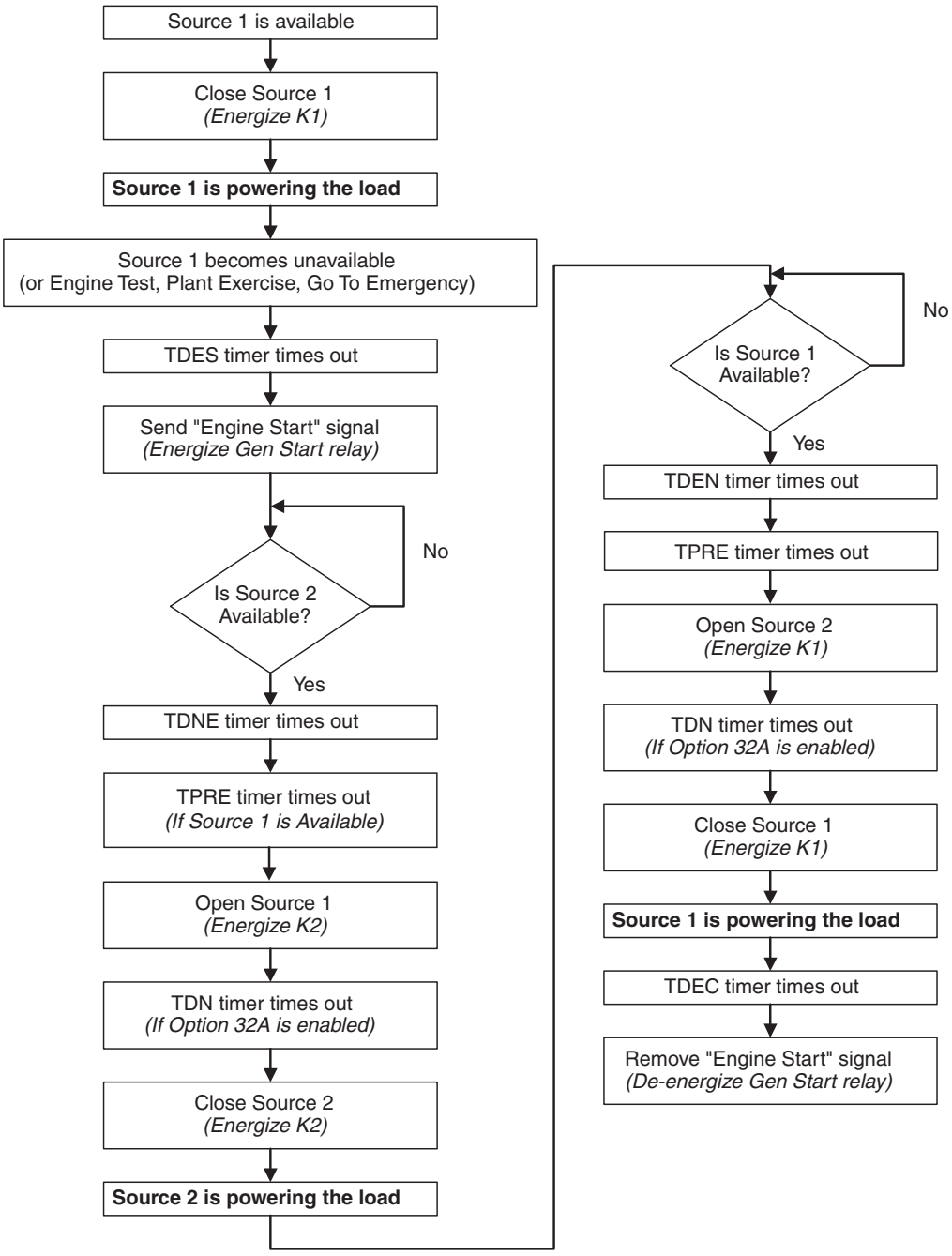

Katolight Service - Master Repair Manual - Page 3966

Dual Utility Transfer Switch

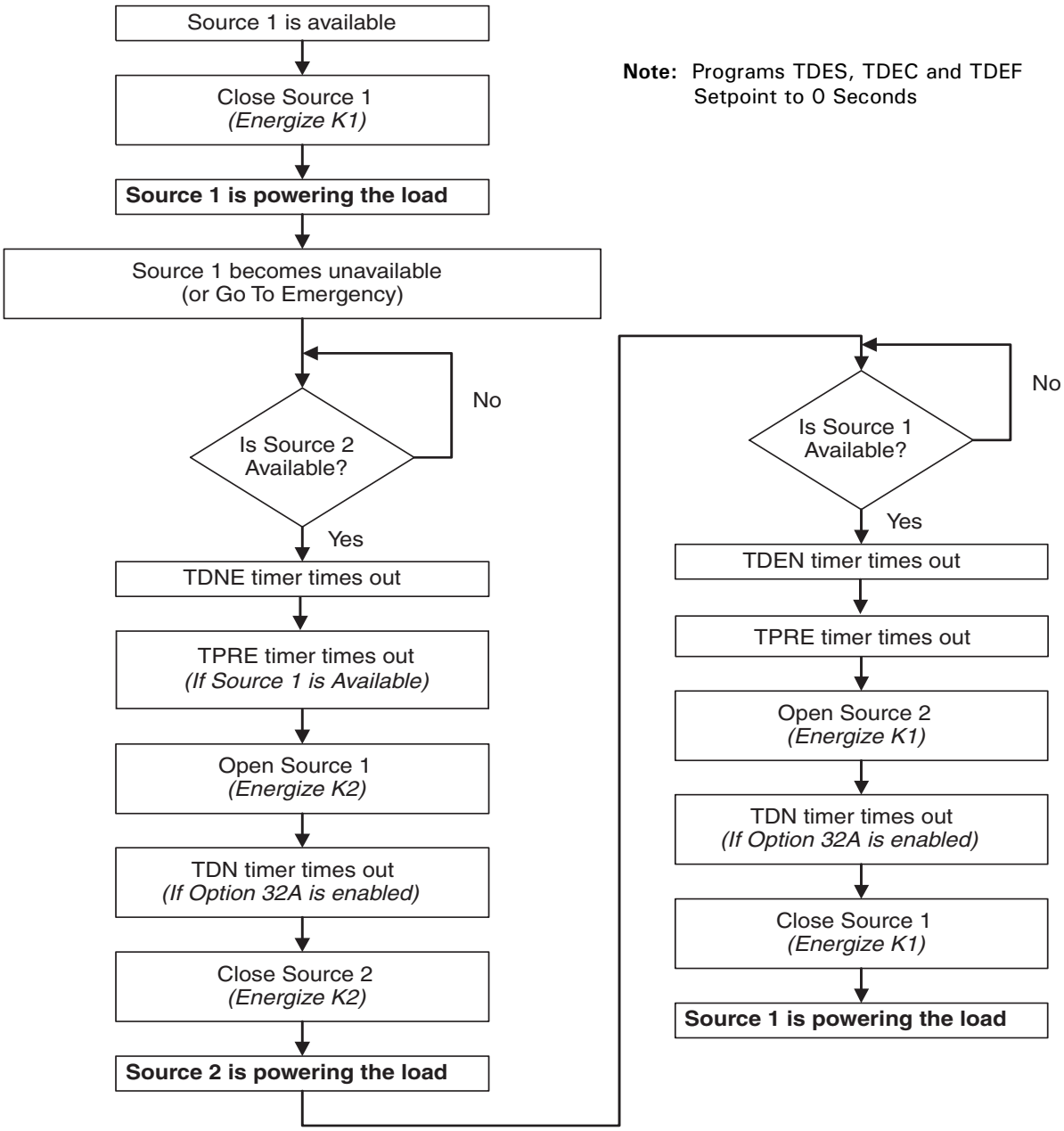

Note: Programs TDES, TDEC and TDEF Setpoint to 0 Seconds

Katolight Service - Master Repair Manual - Page 3967

In-Phase Transition Implementation

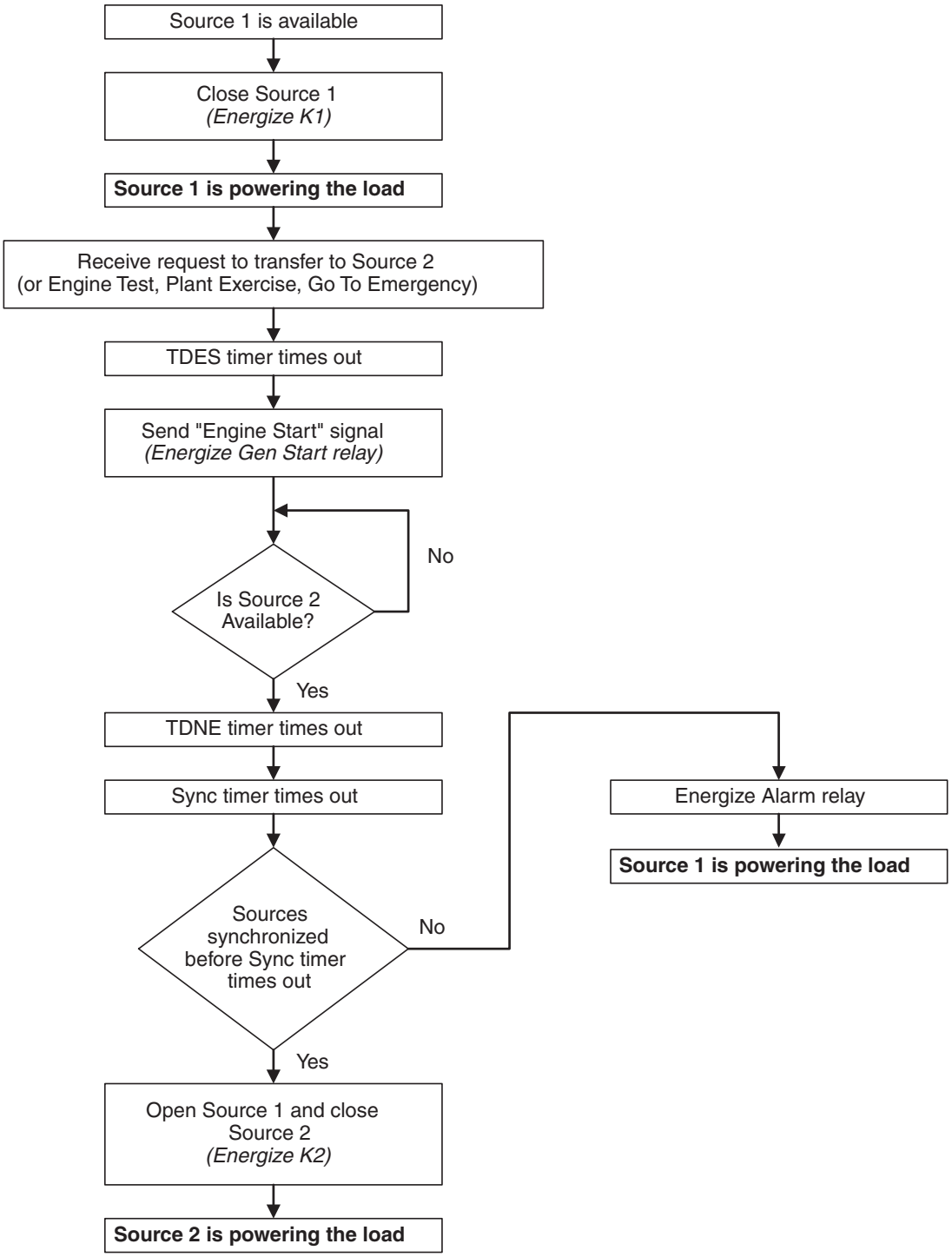

APPENDIX C: DISPLAY MENU TREE

Note: Only standard and programmed optional Features will appear on the LCD Display. Optional Features that are not programmed will be skipped and will not appear on the LCD display.

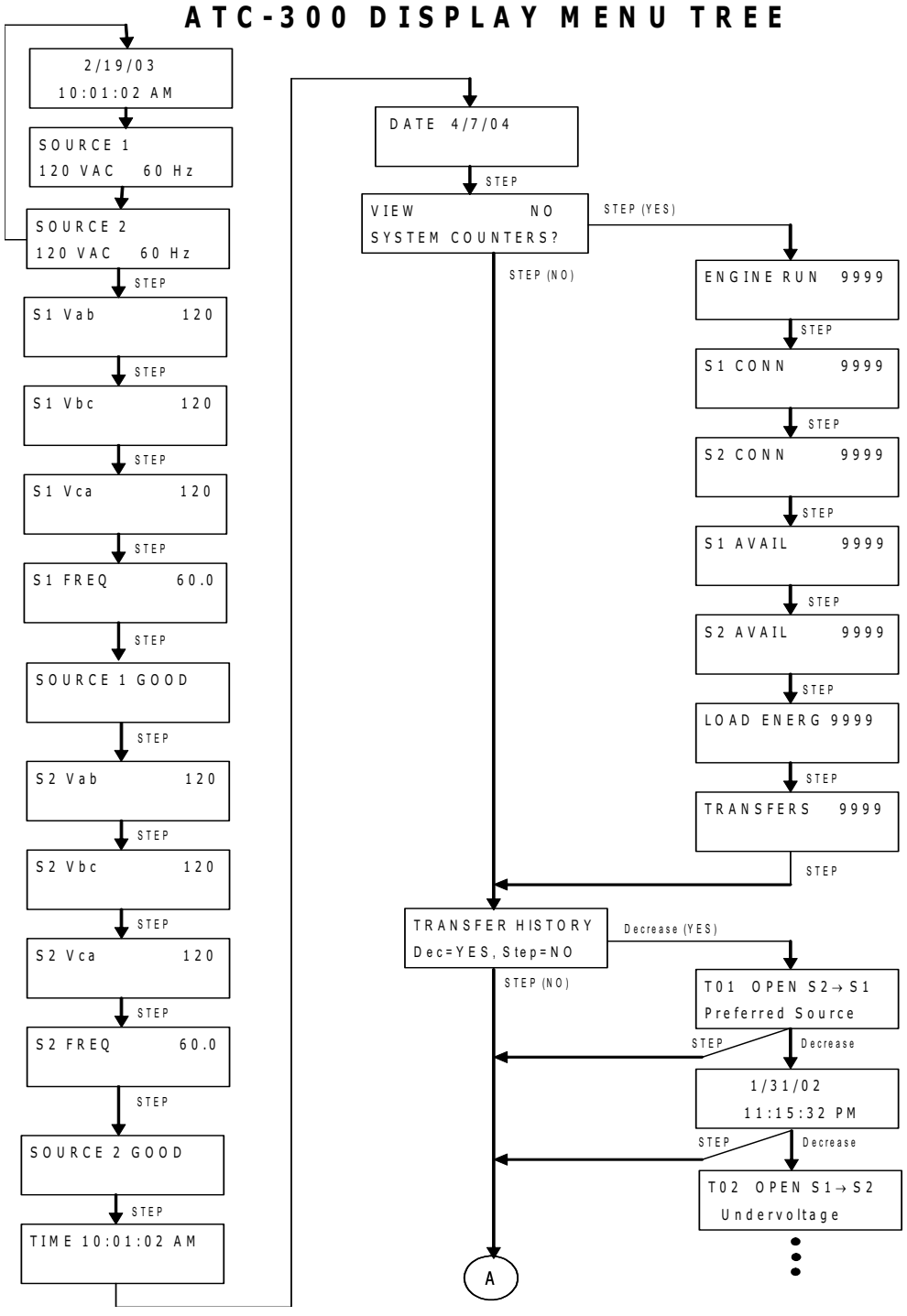

Katolight Service - Master Repair Manual - Page 3969

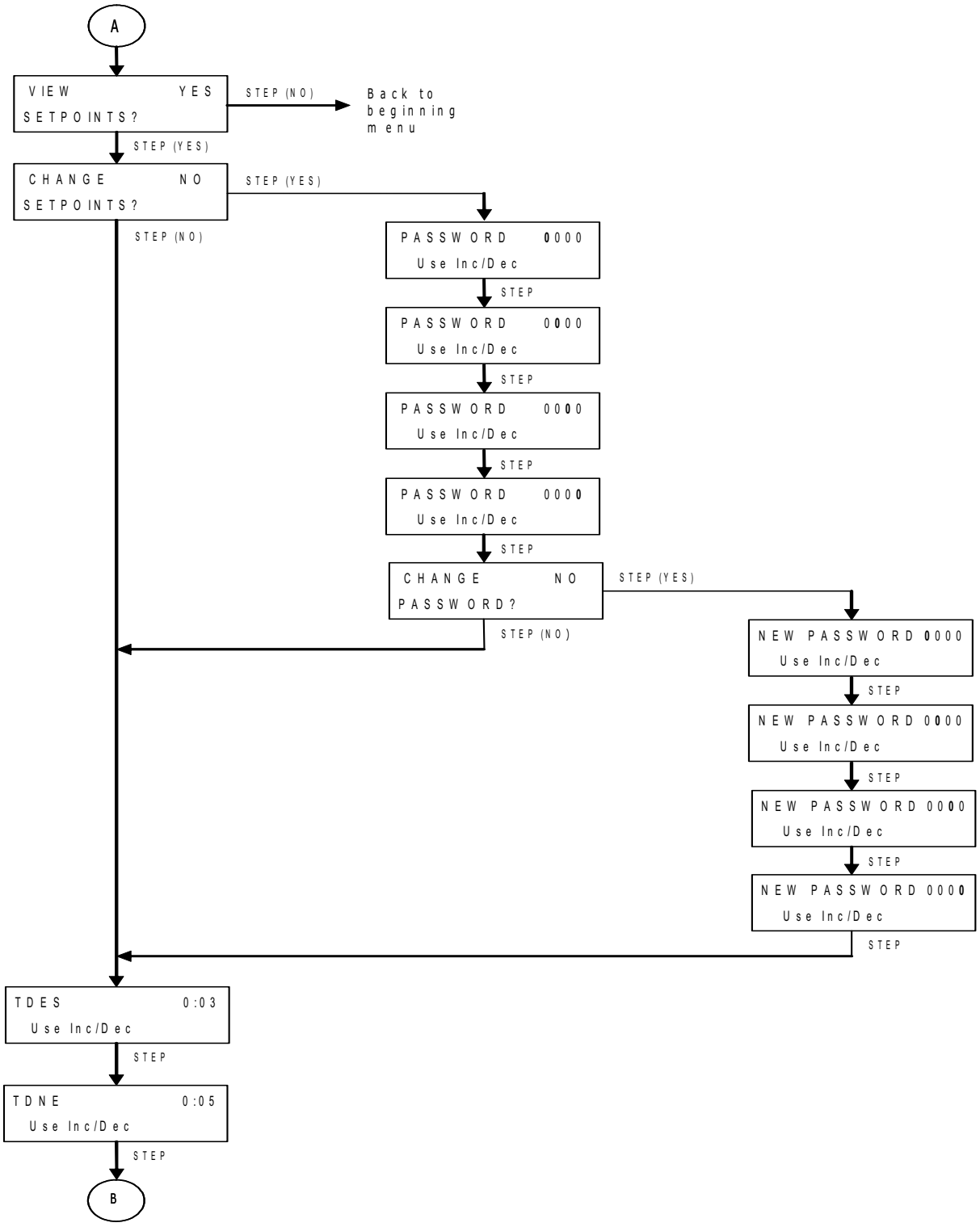

Katolight Service - Master Repair Manual - Page 3970

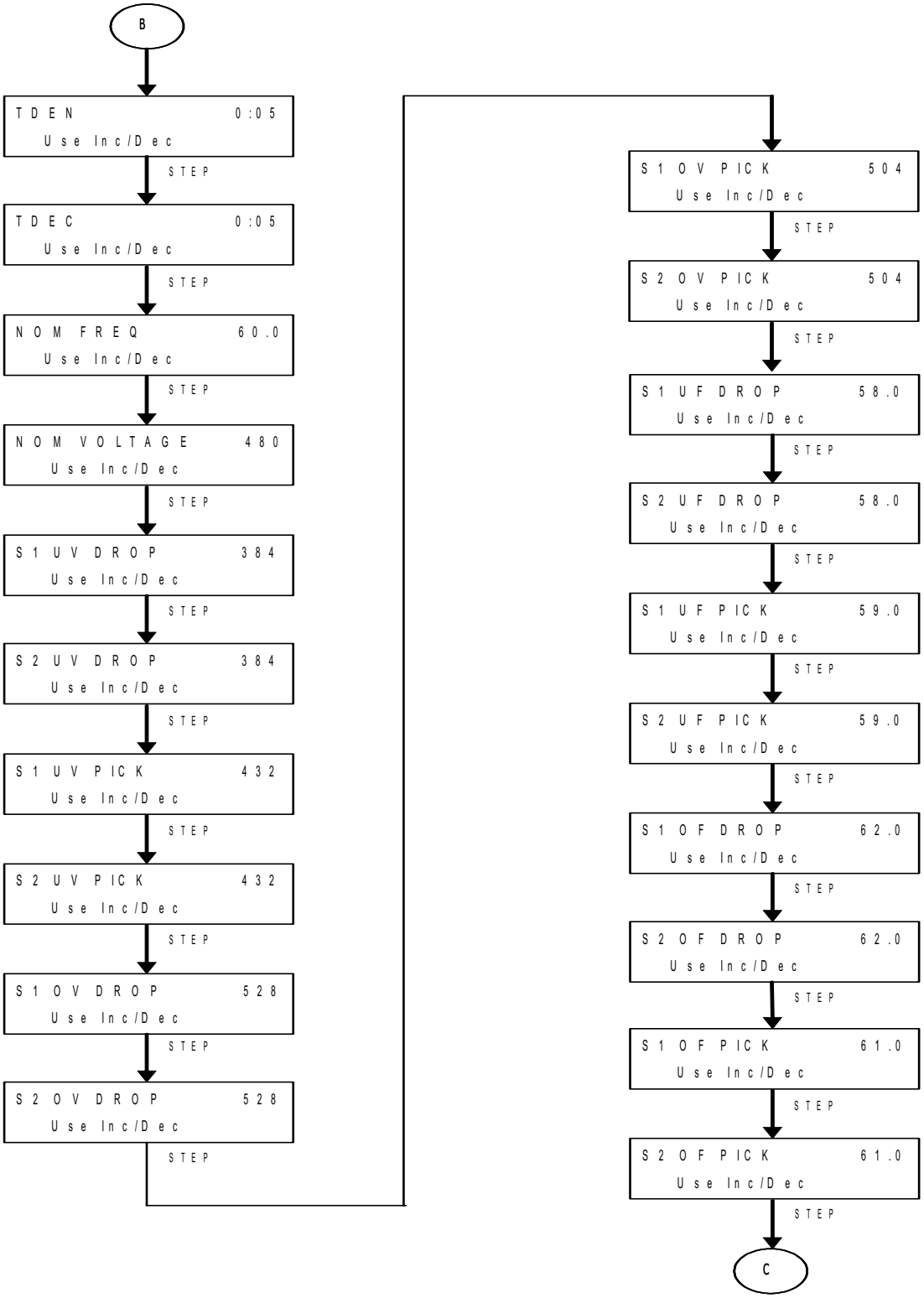

Katolight Service - Master Repair Manual - Page 3971

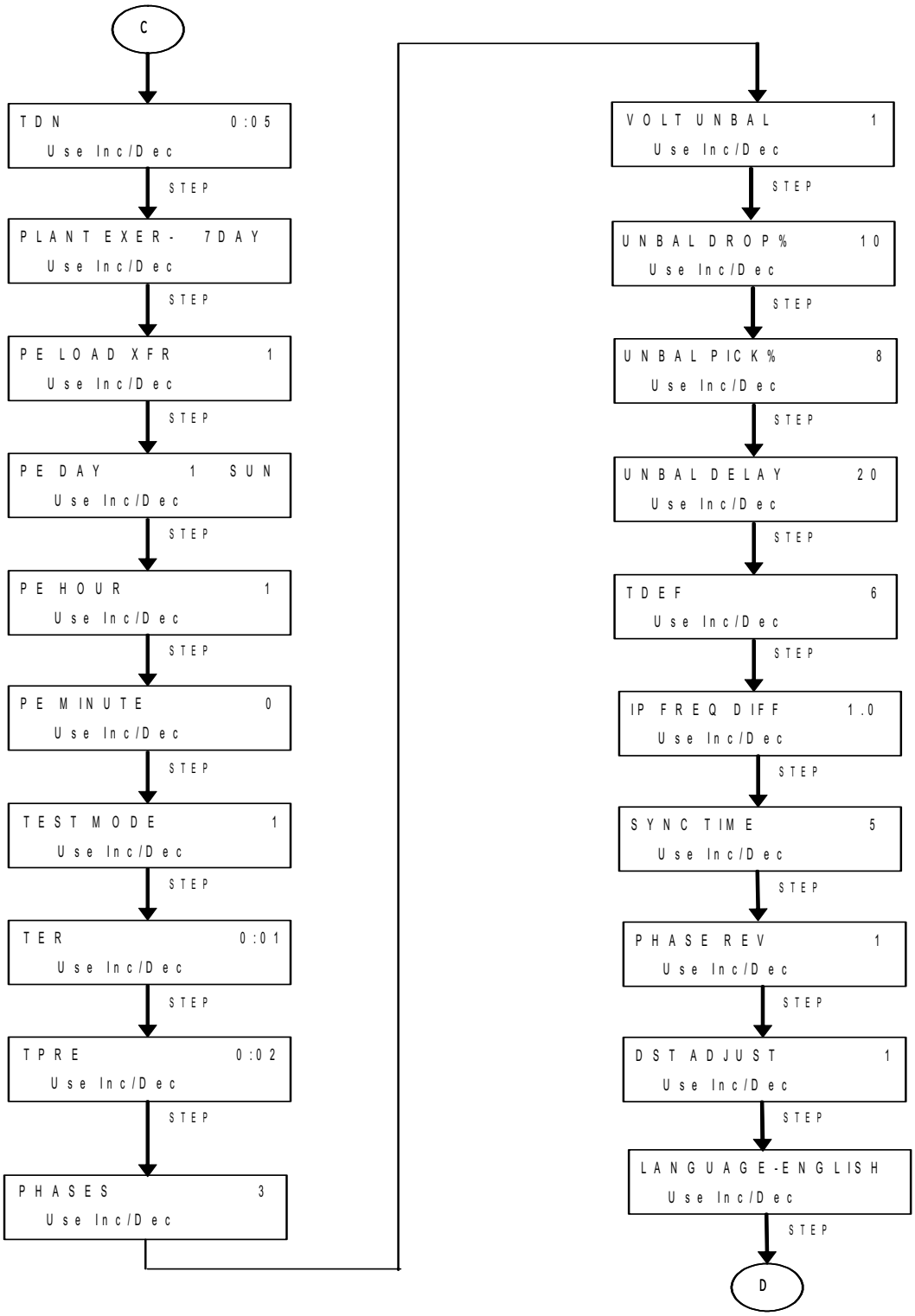
C
TDN 0:05
Use Inc/Dec
STEP
PLANT EXER- 7DAY
Use Inc/Dec
STEP
PE LOAD XFR 1
Use Inc/Dec
STEP
PE DAY 1 SUN
Use Inc/Dec
STEP
PE HOUR 1
Use Inc/Dec
STEP
PE MINUTE 0
Use Inc/Dec
STEP
TEST MODE 1
Use Inc/Dec
STEP
TER 0:01
Use Inc/Dec
STEP
TPRE 0:02
Use Inc/Dec
STEP
PHASES 3
Use Inc/Dec
VOLT UNBAL 1
Use Inc/Dec
STEP
UNBAL DROP% 10
Use Inc/Dec
STEP
UNBAL PICK% 8
Use Inc/Dec
STEP
UNBAL DELAY 20
Use Inc/Dec
STEP
TDEF 6
Use Inc/Dec
STEP
IP FREQ DIFF 1.0
Use Inc/Dec
STEP
SYNC TIME 5
Use Inc/Dec
STEP
PHASE REV 1
Use Inc/Dec
STEP
DST ADJUST 1
Use Inc/Dec
STEP
LANGUAGE-ENGLISH
Use Inc/Dec
STEP
D

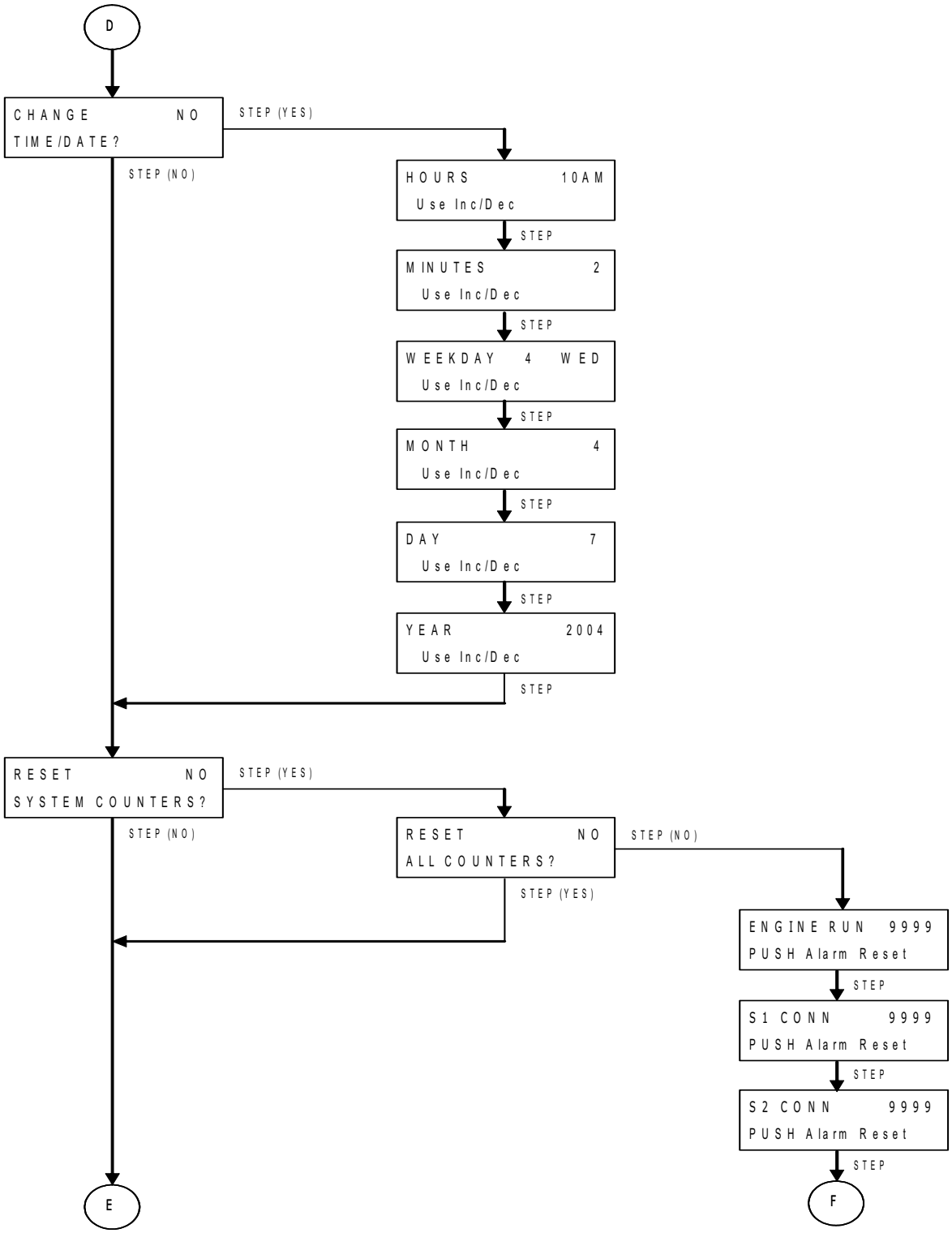

Katolight Service - Master Repair Manual - Page 3973

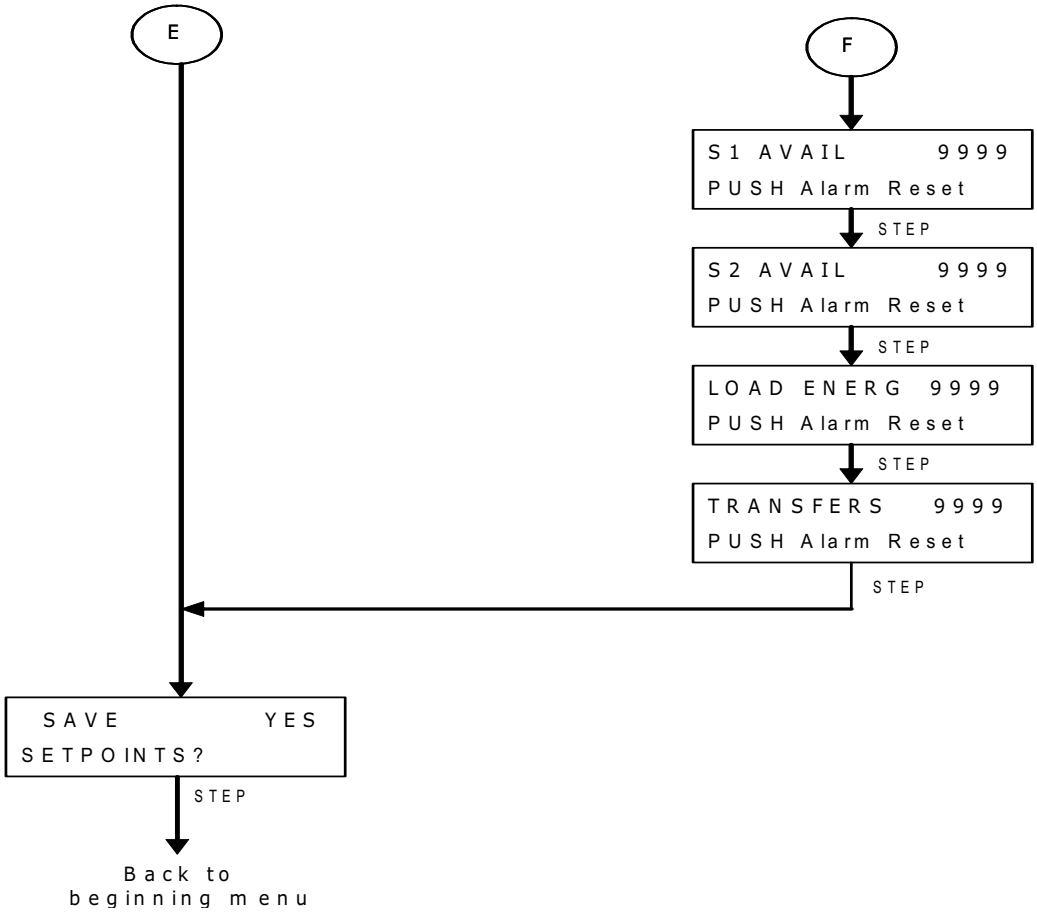
E
F
S1 AVAIL 9999
PUSH Alarm Reset
STEP
S2 AVAIL 9999
PUSH Alarm Reset
STEP
LOAD ENERG 9999
PUSH Alarm Reset
STEP
TRANSFERS 9999
PUSH Alarm Reset
STEP
SAVE YES
SETPOINTS?
STEP
Back to
beginning menu

APPENDIX D: Pickup / Dropout Tables

UnderVoltage Pickup / Dropout Table									
Percentage	Voltage								
	120	208	220	240	380	415	480	600	
97	116	202	213	233	369	403	466	582	
96	115	200	211	230	365	398	461	576	
95	114	198	209	228	361	394	456	570	
94	113	196	207	226	357	390	451	564	
93	112	193	205	223	353	386	446	558	
92	110	191	202	221	350	382	442	552	
91	109	189	200	218	346	378	437	546	
90	108	187	198	216	342	374	432	540	Pickup
89	107	185	196	214	338	369	427	534	
88	106	183	194	211	334	365	422	528	
87	104	181	191	209	331	361	418	522	
86	103	179	189	206	327	357	413	516	
85	102	177	187	204	323	353	408	510	
84	101	175	185	202	319	349	403	504	
83	100	173	183	199	315	344	398	498	
82	98	171	180	197	312	340	394	492	
81	97	168	178	194	308	336	389	486	
80	96	166	176	192	304	332	384	480	Dropout
79	95	164	174	190	300	328	379	474	
78	94	162	172	187	296	324	374	468	
77	92	160	169	185	293	320	370	462	
76	91	158	167	182	289	315	365	456	
75	90	156	165	180	285	311	360	450	
74	89	154	163	178	281	307	355	444	
73	88	152	161	175	277	303	350	438	
72	86	150	158	173	274	299	346	432	
71	85	148	156	170	270	295	341	426	
70	84	146	154	168	266	291	336	420	
69	83	144	152	166	262	286	331	414	
68	82	141	150	163	258	282	326	408	
67	80	139	147	161	255	278	322	402	
66	79	137	145	158	251	274	317	396	
65	78	135	143	156	247	270	312	390	
64	77	133	141	154	243	266	307	384	
63	76	131	139	151	239	261	302	378	
62	74	129	136	149	236	257	298	372	
61	73	127	134	146	232	253	293	366	
60	72	125	132	144	228	249	288	360	
59	71	123	130	142	224	245	283	354	
58	70	121	128	139	220	241	278	348	
57	68	119	125	137	217	237	274	342	
56	67	116	123	134	213	232	269	336	
55	66	114	121	132	209	228	264	330	
54	65	112	119	130	205	224	259	324	
53	64	110	117	127	201	220	254	318	
52	62	108	114	125	198	216	250	312	
51	61	106	112	122	194	212	245	306	
50	60	104	110	120	190	208	240	300	

Katolight Service - Master Repair Manual - Page 3975

OverVoltage Pickup / Dropout Table									
Percentage	**Voltage**								
	120	**208**	**220**	**240**	**380**	**415**	**480**	**600**	
120	144	250	264	288	456	498	576	720	
119	143	248	262	286	452	494	571	714	
118	142	245	260	283	448	490	566	708	
117	140	243	257	281	445	486	562	702	
116	139	241	255	278	441	481	557	696	
115	138	239	253	276	437	477	552	690	Dropout
114	137	237	251	274	433	473	547	684	
113	136	235	249	271	429	469	542	678	
112	134	233	246	269	426	465	538	672	
111	133	231	244	266	422	461	533	666	
110	132	229	242	264	418	457	528	660	Pickup
109	131	227	240	262	414	452	523	654	
108	130	225	238	259	410	448	518	648	
107	128	223	235	257	407	444	514	642	
106	127	220	233	254	403	440	509	636	
105	126	218	231	252	399	436	504	630	

UnderFrequency Pickup / Dropout Table			
Percentage	**Frequency**		
	50	**60**	
97	49	58	
96	48	58	Pickup
95	48	57	
94	47	56	Dropout
93	47	56	
92	46	55	
91	46	55	
90	45	54	

OverFrequency Pickup / Dropout Table			
Percentage	**Frequency**		
	50	**60**	
110	55	66	
109	55	65	
108	54	65	
107	54	64	
106	53	64	Dropout
105	53	63	
104	52	62	Pickup
103	52	62	

Katolight Service - Master Repair Manual - Page 3976

NOTES:

Katolight Service - Master Repair Manual - Page 3977

NOTES:

Katolight Service - Master Repair Manual - Page 3978

NOTES:

Katolight Service - Master Repair Manual - Page 3979

This instruction booklet is published solely for information purposes and should not be considered all-inclusive. If further information is required, you should consult EATON.

Sale of product shown in this literature is subject to terms and conditions outlined in appropriate EATON selling policies or other contractual agreement between the parties. This literature is not intended to and does not enlarge or add to any such contract. The sole source governing the rights and remedies of any purchaser of this equipment is the contract between the purchaser and EATON.

NO WARRANTIES, EXPRESSED OR IMPLIED, INCLUDING WARRANTIES OF FITNESS FOR A PARTICULAR PURPOSE OR MERCHANTABILITY, OR WARRANTIES ARISING FROM COURSE OF DEALING OR USAGE OF TRADE, ARE MADE REGARDING THE INFORMATION, RECOMMENDATIONS AND DESCRIPTIONS CONTAINED HEREIN. In no event will EATON be responsible to the purchaser or user in contract, in tort (including negligence), strict liability or otherwise for any special, indirect, incidental or consequential damage or loss whatsoever, including but not limited to damage or loss of use of equipment, plant or power system, cost of capital, loss of power, additional expenses in the use of existing power facilities, or claims against the purchaser or user by its customers resulting from the use of the information, recommendations and description contained herein.

EATON Electrical
1000 Cherrington Parkway
Moon Township, PA 15108-4312l
U.S.A.
tel: 1-800-525-2000
www.eatonelectrical.com

© 2004 Eaton Corporation
All Rights Reserved
Printed in USA
Publication No. IB01602009E/TBG00077
April 2004

EATON | Cutler-Hammer

ATC-400
Automatic Transfer Switch Controller

Technical Data

New Information



Introduction

Eaton's Cutler-Hammer ATC-400 Automatic Transfer Switch Controller is a comprehensive, multi-function, microprocessor-based automatic transfer switch controller. It is a compact, self-contained, panel-mounted controller that is designed to accurately monitor power sources and provide the necessary intelligence to reliably operate a transfer switch through a series of programmed sensing and timing functions. The ATC-400 provides an unmatched degree of programming flexibility to address the needs of any system.

Primary Functions

As standard the ATC-400 Automatic Transfer Controller will:

- Monitor normal and emergency source voltages and frequencies.
- Provide transfer and re-transfer control signals.
- Provide engine/generator starting and shutdown signals.
- Permit customer programming of operational set points.
- Display real time and historical information.
- Permit system testing.
- Store customer and factory established parameters in nonvolatile memory.
- Ability to communicate.
- Provide faceplate source status indication.
- Provides an LCD-based display for programming and status readouts.

Operational Simplicity

From installation to programming to usage the ATC-400 Controller was designed with operational simplicity in mind. Only one style needs to be considered regardless of input/output requirements or system voltages and frequencies. The intuitive front panel interface simplifies routine operation, programming, and data presentation and set point adjustment. An LCD-based display is backlit for enhanced visibility. The front panel membrane pushbuttons with positive-feedback move the ATC-400 Controller display from function-to-function or step-to-step within a function. The ATC-400 Controller provides the functionality of multiple devices combined in one package and mounts in less than 7 inches (178 mm) x 11 inches (279 mm) of panel space.

Industrial Design Highlights

- Applicable for use on any low or medium voltage system.
- True rms voltage sensing of normal and emergency sources.
- Frequency sensing of normal and emergency sources.
- Programmable set points stored in nonvolatile memory.
- PowerNet communications capable.
- System monitoring with historical data storage and display.
- Gold-plated engine start contact.
- Digital set points for accurate and consistent performance.
- Automatic plant exerciser.
- UV resistant faceplate with Mimic Diagram and LED status indicators.
- LCD-based, backlit, two-line display.
- Suitable for application over a wide range of environmental conditions.
- Self-diagnostic and system diagnostic functions with LED indication.
- Help function for detailed description of displayed message.
- System Test pushbutton.
- Positive feedback membrane pushbuttons for application in harsh environments.
- Password protected access to programming mode.
- Pretransfer contacts.
- Bypass Time Delay pushbutton.
- Control input for remote testing or peak shaving applications.
- Seven different control input functions for maximum operational flexibility.
- Eight different control output relays for maximum system control capability.
- In-phase and Time Delay Neutral transfer modes for systems with inductive loads.

Standards

The Cutler-Hammer ATC-400 Automatic Transfer Switch Controller meets or exceeds all industry standards for endurance, reliability and performance. It is designed to meet the needs of markets worldwide.

The ATC-400 Automatic Transfer Switch Controller is designed and built as standard in accordance with the following standards where applicable.

Table 1. Standards

UL® 1008	UL Standard for Safety for Transfer Switch Equipment
UL 991	Tests for Safety-Related Controls Employing Solid-State Devices
CSA® 22.2 No.178	Canadian Standards Association
IEC 61000-4-2, 61000-4-3, 61000-4-4 61000-4-5 61000-4-6 61000-4-11	International Electrotechnical Commission EMC Standards
FCC Part 15, Class A	Federal Communication Commission RF Emissions
CISPR 11	International Electrotechnical Commission Standard for RF Emissions
UBC®, BOCA® Seismic Zone 4	California Building Code

UL is a federally registered trademark of Underwriters Laboratories Inc. Quincy, Mass.

CSA is a registered trademark of the Canadian Standards Association.

UBC is a trademark of the International Conference of Building Officials (ICBO).

BOCA is a registered trademark of Building Officials and Code Administrators International, Inc.

Katolight Service - Master Repair Manual - Page 3982

ATC-400 Automatic Transfer Switch Controller Product Overview



ATC-400 Automatic Transfer Switch Controller

Table 2. Product Overview

Specifications	Value
Voltage	
Voltage Measurements of: Voltage Measurement Range Voltage Measurement Accuracy	Source 1 and 2: VAB, VBC and VCA 0 – 790V AC rms ±1% of Nominal
Frequency	
Frequency Measurements of: Frequency Measurement Range Frequency Measurement Accuracy	Source 1 and 2 40 – 70 Hz ±0.3 Hz
Control Power	
Input Range	65V AC – 145V AC rms, 50/60 Hz
System Inputs	
Source 1 Closed Source 2 Closed Lockout	Yes Yes Yes
Go to Emergency Bypass TDNE/TDEN Monitor Mode	Yes Yes Yes
Go to Neutral Manual Re-Transfer Emergency Inhibit Run / Programming Toggle Switch	Yes Yes Yes Yes
Output Contacts	
Form “A” for Generator Start Form “A” for Control	(1) 5A, 250V AC/30V DC (4) 10A, 250V AC/30V DC
Form “C” for Source 1 and 2 Available Form “C” for Alarm Form “C” for Pre-Transfer	(2) 10A, 250V AC/30V DC (1) 10A, 250V AC/30VDC (1) 10A, 250V AC/30VDC
Front Panel	
LED Indication	Unit Status. Source 1 and 2: Available and Connected (5 Total)
Main Display	LCD-Based Display
Parameters Displayed	Voltage, Frequency, Status, History, Time, Date, Set Points, Help Information
Stored Historical Data Includes:	Engine Run Time, Source 1 Available Time, Source 2 Available Time, Source 1 Connect Time, Source 2 Connect Time, Load Energized Time, Number of Transfers; Date, Time and Reason for Last 16 Transfers; Monitor Mode Event, Failsafe Event

Table 2. Product Overview (Continued)

Specifications	Value
Front Panel	
Display Language Communications Capable Enclosure Compatibility	English PONI NEMA 1, 12 and 3R, UV Resistant Faceplate
Operating Environmental Range	Operation -20°C – +70°C, Storage -30°C – +85°C, Humidity 0% – 95% Relative (Non-condensing)
Applicable Standards	UL 1008, UL 991, FCC Part 15, CISPR 11, IEC 1000-2,3,4,5, CSA, UBC and BOCA for Seismic Zone 4
Programming Access	Password or Toggle Switch
Front Panel Input Pushbuttons	Engine Test, Step, Help, Lamp Test, Increase, Decrease, Reset, Bypass Time Delays
Programming Selections	
Time Delay Normal to Emergency Time Delay Emergency to Normal Time Delay Engine Cooldown	0 – 1800 Seconds 0 – 1800 Seconds 0 – 1800 Seconds
Time Delay Engine Start Time Delay Neutral Time Delay Emergency Fail	0 – 120 Seconds 0 – 120 Seconds 0 – 6 Seconds
In-Phase In-Phase Frequency Difference Synchronization Time Allowance	Enabled or Disabled 0 – 3 Hz 1 – 60 Minutes
Pre-Transfer Signal Plant Exerciser	1 – 120 seconds (Form “C” Contact) Selectable: Disabled, Daily or 7, 14, 28-Day Intervals, 0 – 600 Minutes, Load or No Load
System Sensing PT Ratio Number of Generators	3-Phase or 1-Phase 2:1 to 500:1 0 or 1
Commitment to Transfer in TDNE Re-Transfer Mode Test Pushbutton Mode System Selection	Enabled or Disabled Automatic or Manual Disabled, Load, No Load Utility/Generator or Dual Utility
Undervoltage Dropout Range Undervoltage Pickup Range Overvoltage Dropout Range Overvoltage Pickup Range	50% – 97% of Nominal Dropout +2% – 99% of Nominal 105% – 120% of Nominal 103% of Nominal to Dropout -2%
Underfrequency Dropout Range Underfrequency Pickup Range	90% – 97% of Nominal Dropout +1 Hz – 99% of Nominal
Overfrequency Dropout Range Overfrequency Pickup Range	103% – 110% of Nominal 101% of Nominal to Dropout -1 Hz

Katolight Service - Master Repair Manual - Page 3983

ATC-400 Automatic Transfer Switch Controller Front Panel Display and Operator Functions

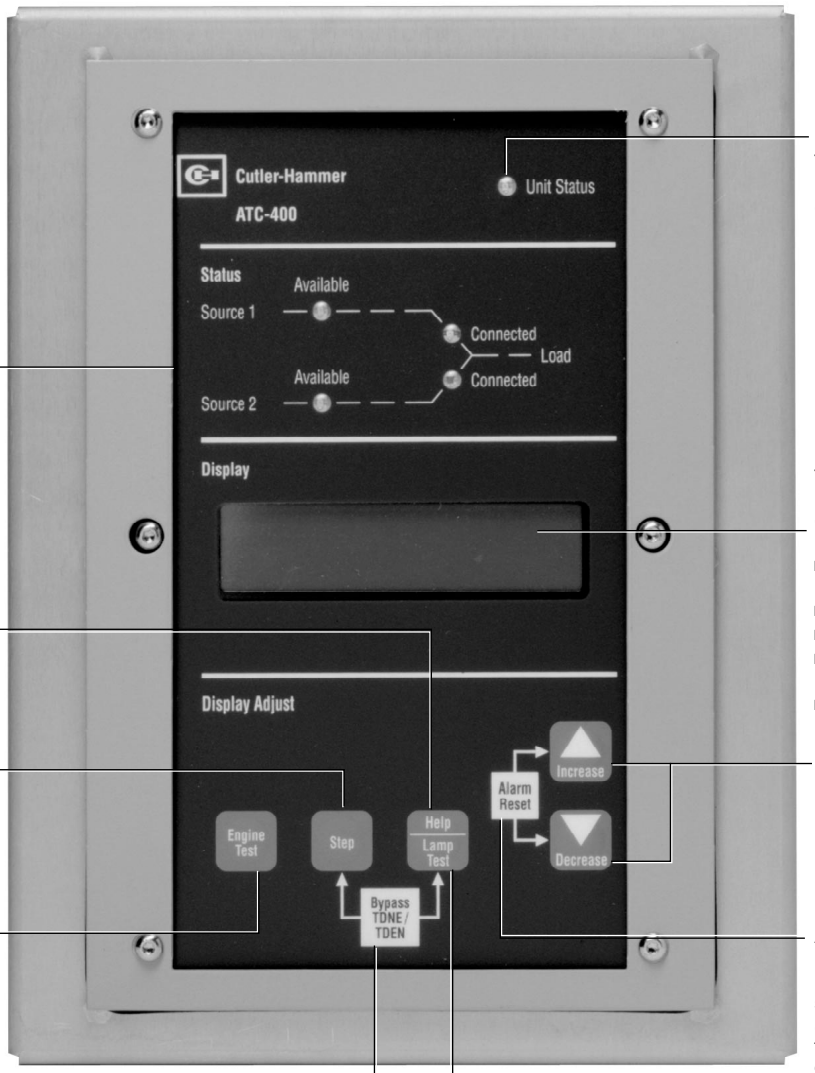

Unit Status
The Unit Status LED is a blinking indicator for self and system diagnostics.

Mimic Diagram
Source 1 and Source 2 color-coded LEDs provide Available and Connected status indication.

LCD-based Display
The LCD-based display is a Backlit, 2-line, 16-character display. Displayed information includes:

- Source voltages and frequency
- Time/date stamp
- Historical data
- Programming and set point information
- Password entry

Help
Pressing the Help pushbutton in any function mode will bring up display messages, explanations and prompts to assist the operator.

Step
Pressing the Step pushbutton advances the information through the programming or display cycle.

Increase and Decrease
Pressing the Increase or Decrease pushbuttons effect the value of the function presently active on the LCD-based display.

Engine Test
Pressing the Engine Test pushbutton twice initiates engine test cycle.

Alarm Reset
Pressing the Increase and Decrease pushbuttons simultaneously restores automatic operation in the event of an alarm condition).

Bypass TDNE/TDEN
Pressing Step and Help/Lamp Test pushbuttons simultaneously reduces programmed time delays to zero to simplify test procedures.

Lamp Test
Pressing the Lamp Test pushbutton lights all LEDs and then displays ATC-400 controller information.

Katolight Service - Master Repair Manual - Page 3984

ATC-400 Automatic Transfer Switch Controller (Left and Right Side Views)

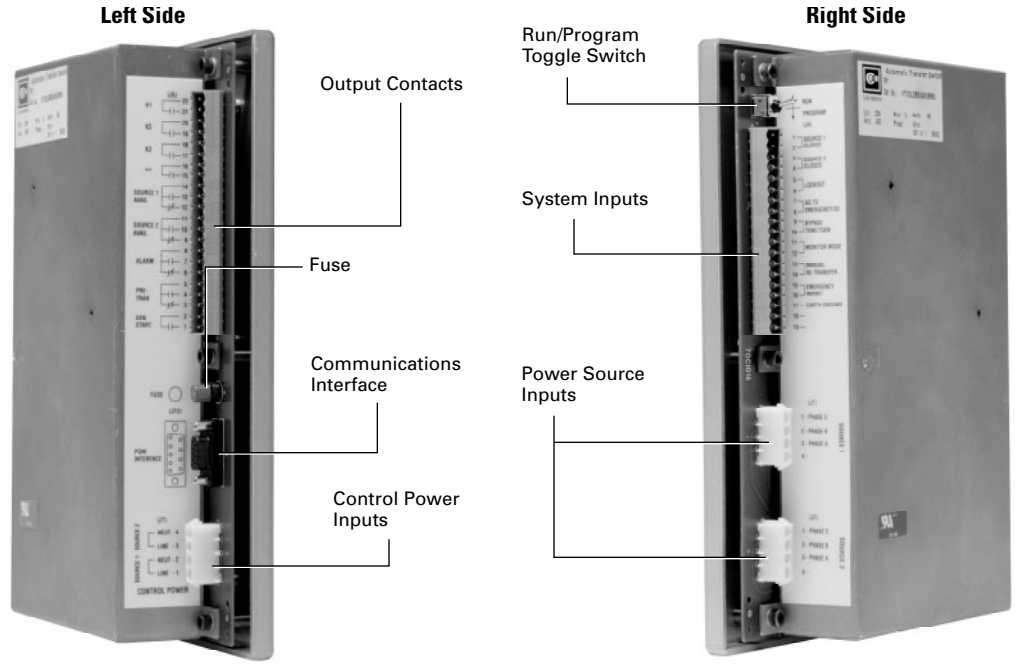

ATC-400 Automatic Transfer Switch Controller (Left and Right Side Views)

Left Side

Output Contacts: The output contacts dry relay contacts. The GEN START contact is rated 5A at 250V AC/30V DC. All other contacts are rated 10A at 250V AC/30V DC.

- K1, K2, K3, K4: These Form "A" output contacts are utilized to control up to two power switching mechanisms. They operate in conjunction with the SOURCE 1 and 2 CLOSED inputs.
- SOURCE 1 and SOURCE 2 AVAIL: These are Form "C" contacts. The relay is energized when the SOURCE meets the definition of "available" as determined by the programmed set points for voltage and frequency.
- ALARM: Form "C" contact. This relay is energized during any of the following alarm conditions: failure of the power switching device to open or close, motor operator failure, unsuccessful in-phase transition, lockout condition, failed engine test, failed plant exerciser operation.
- PRE-TRAN: This relay operates on a timed basis (adjustable 1 – 120 seconds) prior to any transfer operation. Timing begins after TDNE or TDEN times out.
- GEN START: This is a latching relay utilized to initiate startup and shutdown cycles of the engine/generator set.

Fuse: 250 mA/250V fuse for the 24V DC output of the communications serial port.

Communications Interface: The Communications Interface operates via a Product Operated Network Interface (PONI) and is utilized with the field upgrade module.

Control Power Inputs (Source 1 and Source 2): The control power input range is 65V AC – 145V AC, 50/60 Hz.

Right Side

Run/Program Toggle Switch: "Run" position to execute programming. "Program" position to enter set point information. (Programming mode is also accessible via front panel password entry.)

System Inputs: System Inputs are "wetted" contacts. Some system inputs are optional and must be enabled via factory control.

- SOURCE 1 CLOSED: This input is connected to the Source 1 power switching device position indication contact.
- SOURCE 2 CLOSED: This input is connected to the Source 2 power switching device position indication contact.
- LOCKOUT: This input is connected to an alarm contact. During an alarm condition, automatic operation is inhibited.
- GO TO EMERGENCY (S2): This input provides the means to remotely initiate a startup and transfer cycle or retransfer and shutdown cycle.
- MONITOR MODE: This input allows the controller to be placed in a "non-automatic mode" while continuing to monitor source voltages and frequencies.
- MANUAL RE-TRANSFER: This input provides a user selectable mode of either "automatic" or "manual" re-transfer operation.
- EMERGENCY INHIBIT: This input permits the user to either prevent a transfer operation or force a re-transfer operation.
- EARTH GROUND: Provides a connection point for the common system ground.

Power Source Inputs (SOURCE 1 and SOURCE 2): The Power Source Inputs are the connection points for the power sources that are to be monitored. 3-phase systems are connected to Phase A, B and C. Single-phase systems are connected to points Phase A and Phase B.

Katolight Service - Master Repair Manual - Page 3985

Standard and Optional Features

All ATC-400 standard and optional features are listed in **Table 3**. All standard features are included and provided on all ATC-400 units.

Optional features must be specified with order entry and factory programmed. Only features that are originally ordered and factory programmed will appear on the LCD-based display. The ATC-400 Upgrade Module may be ordered to add optional features in the field.

Table 3. ATC-400 Automatic Transfer Controller — Standard and Optional Features

ATC-400 Features	Cutler-Hammer Feature Number	Field Programmable Set Point Range
Standard		
Time Delay Normal to Emergency (TDNE) Time Delay Engine Start (TDES) Time Delay Emergency to Normal (TDEN) Time Delay Engine Cooldown (TDEC)	1 2 3 4	0 – 1800 Seconds 0 – 120 Seconds 0 – 1800 Seconds 0 – 1800 Seconds
Source 2 (Emergency) Single-Phase Undervoltage and Underfrequency Sensing	5B	UV Dropout: 50% – 97% of Nominal UV Pickup: (Dropout +2%) - 99% of Nominal UF Dropout: 90% – 97% of Nominal UF Pickup: (Dropout +1 Hz) - 99% of Nominal
Source 2 (Emergency) 3-Phase Undervoltage and Underfrequency Sensing	5J	UV Dropout: 50% – 97% of Nominal UV Pickup: (Dropout +2%) - 99% of Nominal UF Dropout: 90% – 97% of Nominal UF Pickup: (Dropout +1 Hz) - 99% of Nominal
Test Pushbutton Time Delay Emergency Fail (TDEF) Bypass TDEN Time Delay Bypass TDNE Time Delay	6B 7 8C 8D	No Load, Load or Disabled 0 – 6 Seconds N/A N/A
Source 1 (Normal) Connected LED Indication Source 2 (Emergency) Connected LED Indication	12C 12D	N/A N/A
Source 1 (Normal) Available LED Indication Source 2 (Emergency) Available LED Indication	12G 12H	N/A N/A
Source 1 Available Contacts (1 NO/1 NC) Source 2 Available Contacts (1 NO/1 NC)	14C 14D	N/A N/A
Plant Exerciser with Selectable: (Daily, 7, 14 or 28-day Cycle), (Load or No Load), (Day, Hour, Minute for Test Event)	23J	(Daily, 7, 14 or 28-Day Cycle), (No Load or Load) (Day, Hour, Minute)
Source 1 (Normal) Undervoltage Sensing	26A	UV Dropout: 50% – 97% of Nominal UV Pickup: (Dropout +2%) - 99% of Nominal
Nominal Frequency Nominal Voltage Number of Generators	N/A N/A N/A	50 or 60 Hz 120 – 600V AC 0 or 1
System Phases Commit to Transfer in TDNE Engine Test Run Duration for Engine Test Pushbutton and Plant Exerciser Duration	N/A N/A N/A	1 or 3 Yes or No 0 – 600 Minutes
Optional		
Source 2 (Emergency) Single-Phase Overvoltage and Overfrequency Sensing	5C	OV Dropout: 105% – 120% of Nominal OV Pickup: 103% of Nominal to (Dropout -2%) OF Dropout: 103% – 110% of Nominal OF Pickup: 101% of Nominal to (Dropout -1 Hz)
Source 2 (Emergency) 3-Phase Overvoltage and Overfrequency Sensing	5K	OV Dropout: 105% – 120% of Nominal OV Pickup: 103% of Nominal to (Dropout -2%) OF Dropout: 103% – 110% of Nominal OF Pickup: 101% of Nominal to (Dropout -1 Hz)
Source 1 (Normal) Overvoltage Sensing	26C	OV Dropout: 105% – 120% of Nominal OV Pickup: 103% of Nominal to (Dropout -2%)
Source 1 (Normal) Underfrequency Sensing	26E	UF Dropout: 90% – 97% of Nominal UF Pickup: (Dropout +1 Hz) - 99% of Nominal
Source 1 (Normal) Overfrequency Sensing	26F	OF Dropout: 103% – 110% of Nominal OF Pickup: 101% of Nominal to (Dropout -1 Hz)
Go to Emergency (Source 2) Automatic or Manual Retransfer to Source 1 (Normal) Time Delay Neutral (TDN)	26D 29J 32A	N/A Automatic or Pushbutton Retransfer 0 – 120 Seconds
In-Phase Transition with selectable (Enable or Disable), (Frequency Difference 0 – 3 Hz), (Synchronization Time 1 – 60 Minutes) and Default to Time Delay Neutral	32D	(Enable or Disable) (Frequency Difference 0 – 3 Hz) (Synchronization Time 1 – 60 Minutes)
Pretransfer Contacts (1 NO/1 NC) Load Shed from Source 2 (Emergency Inhibit) PT Ratio	35A 36	N/A N/A 2:1 to 500:1

Katolight Service - Master Repair Manual - Page 3986

ATC-400 Upgrade Module

If an optional feature needs to be added after a transfer switch is in the field, contact the factory for availability of field upgrades with the ATC-400 Upgrade Module. This module can download new programs into the Automatic Transfer Controller (ATC-400) via connection to the communication module connector on the rear of the Automatic Transfer Controller device.

Dimensions in Inches (mm)

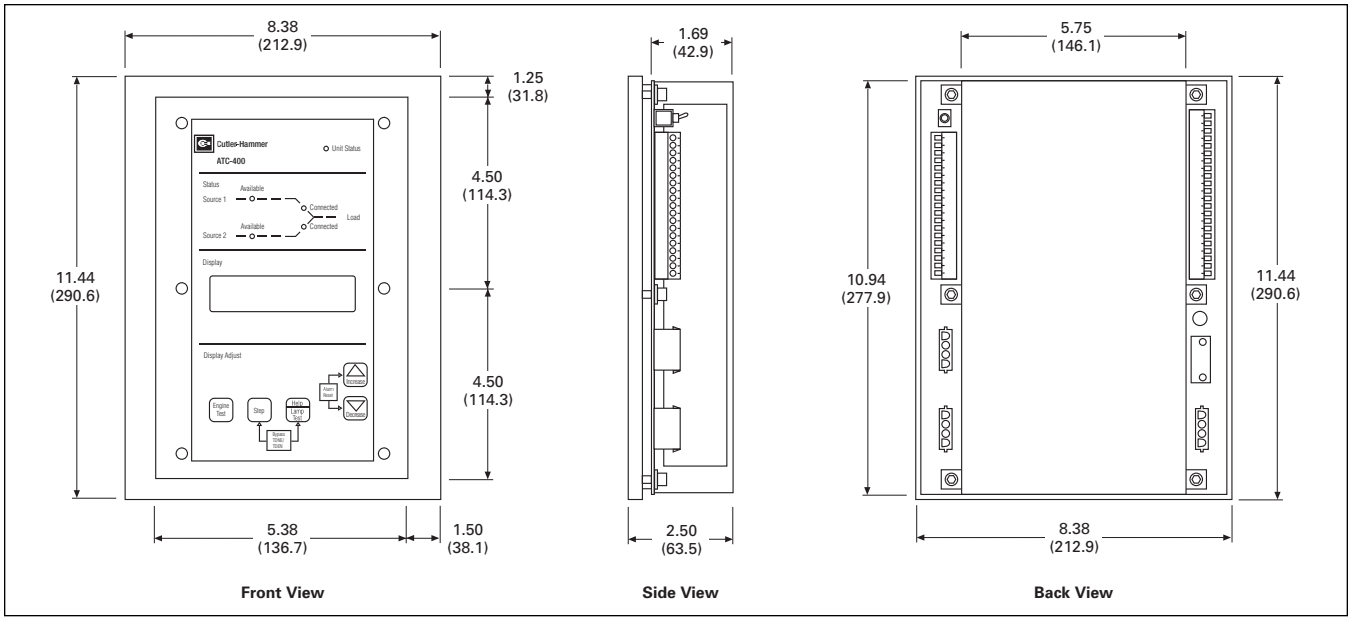

Figure 1. Automatic Transfer Controller (ATC-400)

Dimensions are approximate and should not be used for construction purposes (1 inch = 25.4 mm).

Katolight Service - Master Repair Manual - Page 3987

Eaton Corporation
Cutler-Hammer business unit
1000 Cherrington Parkway
Moon Township, PA 15108-4312
USA
tel: 1-800-525-2000
www.cutler-hammer.eaton.com

© 2002 Eaton Corporation
All Rights Reserved
Printed in USA
Publication No. TD01602004E
September 2002

EATON | Cutler-Hammer

Installation, Operation and Maintenance of the ATC-400

Instruction Book
Effective June 2003



For more information visit: www.cutler-hammer.eaton.com

CAUTION

THE ATC-400 IS FACTORY PROGRAMMED FOR A SPECIFIC TRANSFER SWITCH. DO NOT ATTEMPT TO INTERCHANGE ATC-400 CONTROL DEVICES WITHOUT CONSULTING THE FACTORY.

All possible contingencies which may arise during installation, operation, or maintenance, and all details and variations of this equipment do not purport to be covered by these instructions. If further information is desired by purchaser regarding this particular installation, operation or maintenance of this equipment, the local Cutler-Hammer representative should be contacted.

Katolight Service - Master Repair Manual - Page 3991

TABLE OF CONTENTS

Page

SECTION 1: INTRODUCTION

1.1 PRELIMINARY COMMENTS AND SAFETY PRECAUTIONS . . . 1
1.1.1 WARRANTY AND LIABILITY INFORMATION . . . 1
1.1.2 SAFETY PRECAUTION . . . 1
1.2 BACKGROUND . . . 1
1.3 PRODUCT OVERVIEW . . . 2
1.4 FUNCTIONS/FEATURES/OPTIONS . . . 2
1.4.1 OPERATIONAL SIMPLICITY . . . 2
1.4.2 STANDARD AND OPTIONAL FEATURES . . . 2

SECTION 2: HARDWARE DESCRIPTION

2.1 GENERAL . . . 7
2.2 OPERATOR PANEL . . . 7
2.3 REAR ACCESS AREA . . . 7
2.4 EXTERNAL HARDWARE (COMMUNICATION MODULE) . . . 7
2.5 SPECIFICATION SUMMARY . . . 11

SECTION 3: INTRODUCTION

3.1 GENERAL . . . 12
3.2 LEDS . . . 12
3.3 PUSHBUTTONS . . . 12
3.4 DISPLAY WINDOW . . . 13
3.4.1 STATUS DISPLAY . . . 13
3.4.2 SOURCE 1 AND 2 DISPLAYS . . . 13
3.4.3 TIME/DATE DISPLAY . . . 14
3.4.4 HISTORY DISPLAY . . . 14
3.4.5 SETPOINTS DISPLAY . . . 14
3.4.6 HELP DISPLAY . . . 14

SECTION 4: OPERATION

4.1 GENERAL . . . 15
4.2 AUTOMATIC MODE . . . 15
4.3 MONITOR MODE . . . 15
4.4 CONTROL INPUTS . . . 15
4.5 RELAY OUTPUTS . . . 16
4.5.1 CUSTOMER CONNECTIONS . . . 16
4.5.2 TRANSFER OPERATIONS CONNECTIONS . . . 17
4.6 OPERATION VOLTAGE AND MEASUREMENTS . . . 17
4.7 ENGINE TEST . . . 18
4.8 PLANT EXERCISER . . . 18

Katolight Service - Master Repair Manual - Page 3993

Page

4.9 IN-PHASE TRANSITION 19
4.10 PROGRAM MODE 19
4.11 COMMUNICATIONS 19
4.12 POWERNET COMMUNICATIONS SOFTWARE 19

SECTION 5: PROGRAMMING

5.1 INTRODUCTION 20
5.2 PASSWORD 20
5.3 SETPOINTS MENU 20
5.4 PROGRAMMABLE FEATURE/SETPOINTS 21

SECTION 6: TROUBLESHOOTING AND MAINTENANCE

6.1 LEVEL OF REPAIR 22
6.2 ATC-400 DEVICE TROUBLESHOOTING 22
6.3 ATC-400 REPLACEMENT 25
6.4 MAINTENANCE AND CARE 25

APPENDIX A: DISPLAY MESSAGES FOR STATUS AND TIMERS 26

APPENDIX B: OPERATIONAL FLOWCHARTS 28

APPENDIX C: DISPLAY MENU TREE 34

FIGURES

Figure **Title** **Page**

2.1 ATC-400 CONTROLLER OPERATOR PANEL 8
2.2 ATC-400 CONTROLLER (REAR VIEW) 9
2.3 ATC-400 CONTROLLER (LEFT AND RIGHT SIDE VIEWS) 10

TABLES

Table **Title** **Page**

2.1 ATC-400 CONTROLLER SPECIFICATIONS 11
5.1 PROGRAMMABLE FEATURES/SETPOINTS 21
6.1 TROUBLESHOOTING GUIDE 22

Katolight Service - Master Repair Manual - Page 3994

SECTION 1: INTRODUCTION

1.1 PRELIMINARY COMMENTS AND SAFETY PRECAUTIONS

This technical document is intended to cover most aspects associated with the installation, application, operation and maintenance of the ATC-400 Controller. It is provided as a guide for authorized and qualified personnel only in the selection and application of the ATC-400 Controller. Please refer to the specific WARNING and CAUTION in Section 1.1.2 before proceeding. If further information is required by the purchaser regarding a particular installation, application or maintenance activity, a Cutler-Hammer representative should be contacted.

1.1.1 WARRANTY AND LIABILITY INFORMATION

NO WARANTIES, EXPRESSED OR IMPLIED, INCLUDING WARANTIES OF FITNESS FOR A PARTICULAR PURPOSE OF MERCHANTABILITY, OR WARRANTIES ARISING FROM COURSE OF DEALING OR USAGE OF TRADE, ARE MADE REGARDING THE INFORMATION, RECOMMENDATIONS AND DESCRIPTIONS CONTAINED HEREIN. In no event will Cutler-Hammer be responsible to the purchaser or user in contact, in tort (including negligence), strict liability or otherwise for any special, indirect, incidental or consequential damage or loss whatsoever, including but not limited to damage or loss of use of equipment, plant or power system, cost of capital, loss of power, additional expenses in the use of existing facilities, or claims against the purchaser or user by its customers resulting from the use of the information and description contained herein.

1.1.2 SAFETY PRECAUTION

All safety codes, safety standards and/or regulations must be strictly observed in the installation, operation and maintenance of this device.

WARNING

THE WARNINGS AND CAUTIONS INCLUDED AS PART OF THE PROCEDURAL STEPS IN THIS DOCUMENT ARE FOR PERSONNEL SAFETY AND PROTECTION OF THE EQUIPMENT FROM DAMAGE. AN EXAMPLE OF A TYPICAL WARNING LABEL HEADING IS SHOWN IN REVERSE TYPE TO FAMILIARIZE PERSONNEL WITH THE STYLE OF PRESENTATION. THIS WILL HELP TO INSURE THAT PERSONNEL ARE ALERT TO WARNINGS, WHICH MAY APPEAR THROUGHOUT THE DOCUMENT. IN ADDITION, CAUTIONS ARE ALL UPPER CASE AND BOLDFACE AS SHOWN BELOW.

CAUTION

COMPLETELY READ AND UNDERSTAND THE MATERIAL IN THIS DOCUMENT BEFORE ATTEMPTING INSTALLATION, OPERATION OR APPLICATION OF THE EQUIPMENT. ANY WIRING INSTRUCTIONS PRESENTED IN THIS DOCUMENT MUST BE FOLLOWED PRECISELY. FAILURE TO DO SO COULD CAUSE PERMANENT EQUIPMENT DAMAGE.

1.2 BACKGROUND

Transfer switches are used to protect critical electrical loads against loss of power. The load's normal power source is backed up by a secondary (emergency) power source. A transfer switch is connected to both the normal and emergency sources and supplies the load with power from one of these two sources. In the event that power is lost from the Normal Source, the transfer switch transfers the load to the secondary source. Transfer can be automatic or manual, depending upon the type of transfer switch equipment being used. Once normal power is restored, the load is transfer back to the normal power source.

In automatic transfer switch equipment, the switch's intelligence system initiates the transfer when normal power falls below a preset voltage or frequency. If the emergency source is a standby generator, the transfer switch initiates generator starting and transfers to the emergency source when sufficient generator voltage is available. When normal power is restored, the transfer switch automatically transfers back and initiates engine shutdown.

An automatic transfer switch consist of three basic elements:

- Main contacts to connect and disconnect the load to and from the source of power.
- A transfer mechanism to affect the transfer of the main contacts from source to source.
- Intelligence/supervisory circuits to constantly monitor the condition of the power sources and thus provide the intelligence necessary for the switch and related circuit operation.

This manual deals with the third basic element of the automatic transfer switch, the required intelligence/supervisory circuits. Prior to the introduction of ATC-400 Controller, this function was performed by a door mounted logic panel. The logic panel could

Katolight Service - Master Repair Manual - Page 3995

be the relay logic type or a solid state single board controller type. In either case, the panel consisted of a number of individually mounted and wired devices offering a limited amount of system flexibility, especially in the case of the relay logic design. The ATC-400 Controller brings intelligence, supervisory and programming capabilities to automatic transfer switch equipment.

1.3 PRODUCT OVERVIEW

The ATC-400 Controller is a comprehensive, multi-function, microprocessor based automatic transfer switch controller. It is compact, self-contained, panel mounted device designed to replace traditional relay and solid state logic panels.

Designed to meet the needs of markets worldwide, ATC-400 Controller:
- Is a UL Recognized Component
- Complies with UL 1008/CSA 178.22
- Meets Intent of UL 991
- Meets IEC 1000-4-2, 1000-4-3, 1000-4-4, 1000-4-5, 1000-4-6, and 1000-4-11
- Meets CISPR 11
- Complies with FCC Part 15, Class A

The ATC-400 Controller provides an unmatched degree of programmed flexibility to address the needs of any system. It operates from all system voltages between 110 VAC and 600 VAC, single phase and three phase, at 50 or 60 Hz. In addition, a period of no control power operation is provided. The ATC-400 Controller monitors the condition of the 3-phase line-to-line voltage and frequency of both the Normal and Emergency sources. It can also be programmed for single phase operation. The ATC-400 Controller provides the necessary intelligence to insure that the switch operates properly through a series of programmed sensing and timing functions.

A standard ATC-400 Controller will:
- Monitor Normal and Emergency source voltages and frequencies
- Provide undervoltage monitoring of Normal and Emergency sources
- Permit customer programming
- Display real time and historical information
- Permit system testing
- Store customer/factory established parameters in nonvolatile memory
- Communicate with laptop or remote PC using PowerNet software
- Provide faceplate source status indications

1.4. FUNCTIONS/FEATURES/OPTIONS

The primary function of ATC-400 Controller is to accurately monitor power sources and provide the necessary intelligence to operate a transfer switch in an appropriate and timely manner. In addition, the ATC-400 Controller provides programming through the device's faceplate or communication option.

1.4.1 OPERATIONAL SIMPLICITY

From installation to programming to usage, the ATC-400 Controller was design with operational simplicity in mind. Only one style needs to be considered, regardless of input/output requirements or system voltages and frequencies. ATC-400 Controller provides the functionality of numerous other devices combined in one package that mounts in less than 7 by 11 inches of panel space.

The user-friendly front panel interface simplifies routine operation, programming, data presentation and setting adjustments. An LCD-based display provides the flexibility of back lit display for enhanced visibility. The operation of front panel membrane pushbuttons move the ATC-400 Controller display from function to function or step to step within a function.

1.4.2 STANDARD AND OPTIONAL FEATURES

A variety of programmable features are available to meet a wide variety of application requirements. Individual features or feature combinations provide the intelligence required to tailor switches to individual needs.

The features are factory activated, depending upon customer requirements. The specific variable setpoints associated with standard and factory activated features are stored in a nonvolatile memory. Activated feature setpoints are available for customer adjustment. Any feature not selected and factory activated cannot be viewed or adjusted.

NOTICE

With respect to their use in this document and as they relate to automatic transfer switch operation, the following words or phrases are defined:

Available
A source is defined as "available" when it is within all undervoltage / overvoltage / underfrequency / overfrequency setpoint ranges for the nominal voltage and frequency setting.

Katolight Service - Master Repair Manual - Page 3996

Source 1
is the preferred source, or Normal Source, or Normal.

Source 2
is the secondary, Emergency Source, or Emergency, or backup source.

Failed or Fails
A source is defined as "failed" when it is outside of any undervoltage / overvoltage / underfrequency / overfrequency setpoint ranges for the nominal voltage and frequency setting for a time exceeding 0.5 seconds.

Failsafe
Failsafe refers to the condition whereby the transfer switch is connected to the Emergency Source. In the event that the Emergency Source fails, with TDEF set to zero, and the Normal Source available, an immediate retransfer to the Normal Source shall occur.

Transfer
A "transfer" is defined as when the ATC-400 initiates a change of the load connection from Source 1 to Source 2 except when specifically used as "Transfer to Neutral".

Re-transfer
A "re-transfer" is defined as when the ATC-400 initiates a change of the load connection from Source 2 to Source 1.

Transfer to Neutral
A "Transfer to Neutral" is defined as the load circuits are disconnected from both Source 1 and Source 2.

$V_{IN, RMS}$
Refers to the operating input voltage ($V_{AC, RMS}$).

FEATURE #
For personnel who are familiar with previous transfer switch controller option specifications, an attempt at equivalence to some of the features is made.

The ATC-400 Controller features are described below. The actual programmable setpoints for each feature are covered in Section 5.

Standard Feature 1: Time Delay Normal to Emergency (TDNE)

TDNE provides a time delay when transferring from the Normal Source to the Emergency Source. It ensures stability of the Emergency Source. Timing begins when the Emergency Source becomes available. If the Normal Source becomes available while timing, the TDNE timer will reset.

Standard Feature 2: Time Delay Engine Start (TDES)

TDES delays the initiation of the engine start circuit in order to override momentary power outages or voltage fluctuations of the Normal Source. The TDES timer shall start when the Normal Source becomes unavailable. If the Normal Source becomes available while timing, the TDES timer will reset. The controller can perform the time delay engine start function without control power for 120 seconds

Standard Feature 3: Time Delay Emergency to Normal (TDEN)

TDEN delays the transfer from the Emergency Source to the Normal Source to permit stabilization of the Normal Source before retransfer is made. Timing begins when the Normal Source becomes available. If the Normal Source becomes unavailable while timing, the TDEN timer will reset.

Standard Feature 4: Time Delay Engine Cooldown (TDEC)

Permits the generator to continue to run unloaded after retransfer to the Normal Source has occurred. Timing begins when the transfer to normal has been completed.

Standard Feature 5B/5J: All Phase Undervoltage/Underfrequency Sensing

The controller monitors the voltage of each phase of the emergency /standby power source. Frequency is also monitored. User adjustable dropout and pickup settings are provided.

Standard Feature 7: Time Delay Emergency Fail (TDEF)

TDEF will delay a connected Emergency Source which is not within the required voltage and frequency setpoints from being declared "Failed" in order to override momentary generator fluctuations. This time delay is only implemented when the Emergency Source is a generator, is connected, and has "failed".

Standard Feature 8: Pushbutton Bypass of Time Delays (TDNE/TDEN)

This enables the user to bypass the TDNE or TDEN timer during a transfer. Simultaneously pressing the Step and Help/Lamp Test pushbuttons shall cause the transfer switch to transfer to the Normal and/or Emergency Source without a time delay. This feature does not bypass the TDN feature (32A).

Standard Feature 12C: Source 1 Connected (Green)

Indicates that the transfer switch is connected to Source 1.

Katolight Service - Master Repair Manual - Page 3997

Standard Feature 12D: Source 2 Connected (Red)

Indicates that the transfer switch is connected to Source 2.

Standard Feature 12G: Source 1 Available (Amber)

Indicates that Source 1 is available and the voltage and frequency are within the programmed parameters.

Standard Feature 12H: Source 2 Available (Amber)

Indicates that Source 2 is available and the voltage and frequency are within the programmed parameters.

Standard Feature 23J: Plant Exerciser

This feature provides for automatic test operation of the generator. The test is user-selectable to run daily, every 7 days, every 14 days, or every 28 days with duration equal to the programmed engine test time. Two optional modes of plant exercising are available:

a) No Load Exercise
b) Load Exercising with failsafe

This feature can be disabled by programming the "PE Enable" setpoint to "0".

Load testing is failsafe. If the generator fails during testing for any reason, the ATC-400 will signal the transfer switch to return to Normal Source if the Normal Source is available.

Standard Feature 26: Normal Source Undervoltage Sensing

The controller monitors each phase of the Normal Source voltage for an undervoltage condition. When the normal voltage is below the dropout setpoint, the source will become unavailable. A transfer to the Emergency Source shall be initiated when the Emergency Source is available. The Normal Source voltage will then have to be above the pickup setpoint to become available again.

Standard Feature: System Nominal Frequency

There are only two choices for system nominal frequency of the distribution system, 50 or 60 Hertz. The dropout/pickup, underfrequency and overfrequency upper and lower setting limits are based on the nominal frequency value.

Standard Feature: System Nominal Voltage

This refers to the standard system nominal RMS line to line voltage. A wide range (120 to 600 VAC) of sensing voltage is available to be programmed. The dropout/pickup, undervoltage and overvoltage upper and lower setting limits are based on the nominal frequency value.

Standard Feature: Commit to Transfer During TDNE Timing

This feature provides for selection as to whether or not commitment to transfer is desired when Time Delay Normal to Emergency countdown has begun. If no commitment is chosen and the Normal Source returns to availability when the TDNE timer is counting down, the transfer is aborted and the engine generator (if applicable) is cooled down.

Standard Feature: Engine Test Mode

This feature provides selection of the type of test that can be initiated by the front panel Engine Test pushbutton. An engine test without transferring the load to it, or an engine test with a full transfer of the load to the engine can be chosen. Load testing is fail-safe. If the generator fails during testing for any reason, the ATC-400 will signal the transfer switch to return to the Normal Source. If disable test mode is chosen, the front panel pushbutton cannot be used to initiate a test.

Standard Feature: Test Engine Run

This feature provides selection of the length of time in hours and minutes that the ATC-400 will enable the generator contacts during an Engine Test that was initiated from the front panel pushbutton or for the plant exerciser feature, if applicable.

Optional Feature 5C/5K: Emergency/Standby Source Overvoltage/Overfrequency Sensing

The controller monitors the voltage of each phase of the emergency/standby power source. Frequency is also monitored. User adjustable dropout and pickup settings are provided.

Optional Feature 9B: Maintenance Selector Switch

Marked "OFF", "ON". This feature locks out the automatic transfer operation for maintenance when the switch is in the "OFF" position.

Optional Feature 16: Overcurrent Protection (Lockout)

When integral overcurrent protection is provided for either one or both sources, the need for separate upstream overcurrent protection, in most instances, is eliminated. With this factory installed feature in the ATC-400, further automatic transfer operation is locked out until the appropriate source breaker is reset.

Katolight Service - Master Repair Manual - Page 3998

Optional Feature 26C: Normal Source Overvoltage Sensing

The controller monitors each phase of the Normal Source voltage for an overvoltage condition. When the normal voltage is above the dropout setpoint, the source will become unavailable. A transfer to the Emergency Source shall be initiated when the Emergency Source is available. The Normal Source voltage will then have to be below the pickup setpoint to become available again.

Optional Feature 26D: Go To Emergency / S2

This feature enables an external contact closure to initiate a transfer from the Normal Source to the Emergency Source. If the external contact is closed and the Emergency Source fails, the ATC-400 will transfer the load back to the Normal Source.

Optional Feature 26E: Normal Source Underfrequency Sensing

The controller monitors the Normal Source frequency for an underfrequency condition. When the normal frequency is below the dropout setpoint, the source will become unavailable. A transfer to the Emergency Source shall be initiated when the Emergency Source is available. The Normal source frequency will then have to be above the pickup setpoint to become available again.

Optional Feature 26F: Normal Source Overfrequency Sensing

The controller monitors each phase of the Normal Source frequency for an overfrequency condition. When the normal frequency is above the dropout setpoint, the source will become unavailable. A transfer to the Emergency Source shall be initiated when the Emergency Source is available. The Normal Source frequency will then have to be below the pickup setpoint to become available again.

Optional Feature 29J: Type of Re-transfer (Automatic or Manual)

This feature provides for a selection between an automatic re-transfer mode or a manual pushbutton re-transfer mode when transferring from Emergency to Normal. If this option is not selected, the factory default selection is automatic.

Optional Feature 32A: Time Delay Neutral (TDN)

TDN provides a time delay in the transfer switch neutral position during transfer and retransfer operations. This is to prevent excessive inrush currents due to out-of-phase switching of large inductive loads. If the TDN timer is programmed to 0 seconds, the transfer switch shall operate as if the TDN option is disabled.

Optional Feature 32D: In-phase/Time Delay Neutral

In-phase Transition is a feature that will allow a transfer between two live sources only when the phase difference between the two sources is near zero. This is an open transition transfer that prevents in-rush currents from exceeding normal starting currents in the case where motor loads are being transferred.

Time Delay Neutral provides a time delay in the transfer switch neutral position when both breakers are open. This delay takes place when the load is transferred in either direction to prevent excessive in-rush currents due to out-of-phase switching of large motor loads.

Optional Feature 35: Pretransfer Relay

This provides one form C contact (NO/NC) for interface with other equipment (typically elevator controls). The contacts close/open on a timed basis (adjustable 1 - 120 seconds) prior to transfer in either direction. After TDNE/TDEN times out, this relay closes and the Pretransfer timer (TPRE) starts timing. After the TPRE times out, the transfer proceeds by starting the TDN timer is enabled. The pretransfer relay opens after the transfer is complete.

Optional Feature 36: Load Shed From Emergency

This feature enables an external N/C contact to initiate a transfer when the load is connected to Source 2. If the contact is opened when Source 1 is not available, the ATC-400 will go to the neutral position with both sources disconnected from the load. If the contact is opened when Source 1 is available, the ATC-400 will transfer the load from Source 2 to Source 1.

Optional Feature 46: Potential Transformer (PT) Ratio

This feature allows external voltage transformers to be used on the ATC-400's source sense inputs. Once this option is enabled, the PT Ratio setpoint can be adjusted in steps of 1, between 2:1 and 500:1. Also when this option is enabled the Nominal System Voltage setting will be fixed at 120 VAC or 110 VAC, depending upon the Nominal System Frequency setting. If the Nominal System Frequency setting is 60 Hz, then the Nominal System Voltage will be fixed at 120 VAC and all voltage pick-up an drop-out setpoints will be based upon the 120 volt level. The same is true of a Nominal System Frequency of 50 Hz whose Nominal System Voltage will be fixed at 110 VAC. The metering display will use the PT ratio to calculate and display the source voltages with up to three significant digits. There will be four possible types of displays, as an example, they could display 999K, 99,9K, 9,99K, or 999 volts.

Katolight Service - Master Repair Manual - Page 3999

48. Communication Modules

Provides communications modules for the ATC-400, ATC-600 (IQ Transfer), and ATC-800 (Closed Transition IQ Transfer) transfer switch controllers. These controllers are PowerNet and Modbus compatible devices. A separately mounted communications module will enable the automatic transfer controller to be remotely monitored controlled and programmed via the network.

48F. RS-232 and RS-485 with Modbus

Provides communications for the ATC-400 via RS-232 or Modbus through an RS-485 port. Registers are available to read back status, voltages, frequencies, and historical data. Registers are also available for transfer switch control. Setpoints may be read back and/or programmed via a pass-through command.

Katolight Service - Master Repair Manual - Page 4000

SECTION 2: HARDWARE DESCRIPTION

2.1 GENERAL

The purpose of this section is to familiarize the reader with the ATC-400 hardware, its nomenclature, and to list the unit specifications. The information presented is divided into the following three parts:

- Operator Panel
- Rear Access Area
- Specification Summary

2.2 OPERATOR PANEL

The operator panel, which is normally accessible from the outside of a panel or door, provides a means for:
- Being alerted to specific conditions
- Programming
- Parameter Monitoring/Selection/Metering

LEDs, a display window, pushbuttons and a mimic bus make up the front accessible operator panel (Figure **2-1**).

Five individual LEDs are lit when performing or indicating a specific function. For detailed information on individual LEDs refer to Paragraph 3.2.

A two-line 16-character alphanumeric LCD display is used to display all ATC-400 Controller monitored parameters, setpoints and messages in easy to read formats. For details concerning the kind of information that can be viewed in the display window refer to Paragraph 3.4.

The front operator panel supports five long-life membrane pushbuttons. Pushbuttons accomplish their function when pressed and released. Refer to Paragraph 3.3 for information concerning the function of specific pushbuttons.

2.3 REAR ACCESS AREA

The rear access area of the ATC-400 Controller is normally accessible from the rear of an open panel door (Figure **2-2**).

All wiring connections to the ATC-400 Controller are made at the rear of the chassis. For the sake of uniform identification, the frame of reference when discussing the rear access area is facing the back of the ATC-400 Controller with the panel door open.

The left rear of the chassis provides connectors J1 and J2 for voltage monitoring of Source 1 and Source 2 respectively. Connector Terminal block J4 provides DC wetted connections for various control inputs. Customer programming is provided through the Program/Run toggle switch. While the switch is in the Program position, the ATC-400 continues to operate in keeping with previously programmed setpoints.

The right rear of the chassis provides a port that will accept the D-sub male connector of the optional Communication Module (IPONI). Remote communication with the controller is provided through this connector, J13. A self-locking female connector J7 is provided for Sources 1 and 2 control power input. Terminal block J5 provides dry relay contacts for primary control outputs. See Section 4.5.1 for contact ratings.

2.4 EXTERNAL HARDWARE (COMMUNICATION MODULE)

Communications are made possible by mounting a small, addressable communication module (IPONI) to the back of the ATC-400 and connecting to J13. Since the ATC-400 is always supplied with a communications port, an IPONI can be easily retrofitted to the ATC-400 at any time. **It is recommended that the control power to the ATC-400 be removed prior to connecting or disconnecting the IPONI.** Refer to the instructions supplied with the IPONI for more details.

Katolight Service - Master Repair Manual - Page 4001



Figure 2-1 ATC-400 Controller Operator Panel

Katolight Service - Master Repair Manual - Page 4002



Figure 2-2 ATC-400 Controller (Rear View) with IPONI Communications Module Installed

Katolight Service - Master Repair Manual - Page 4003

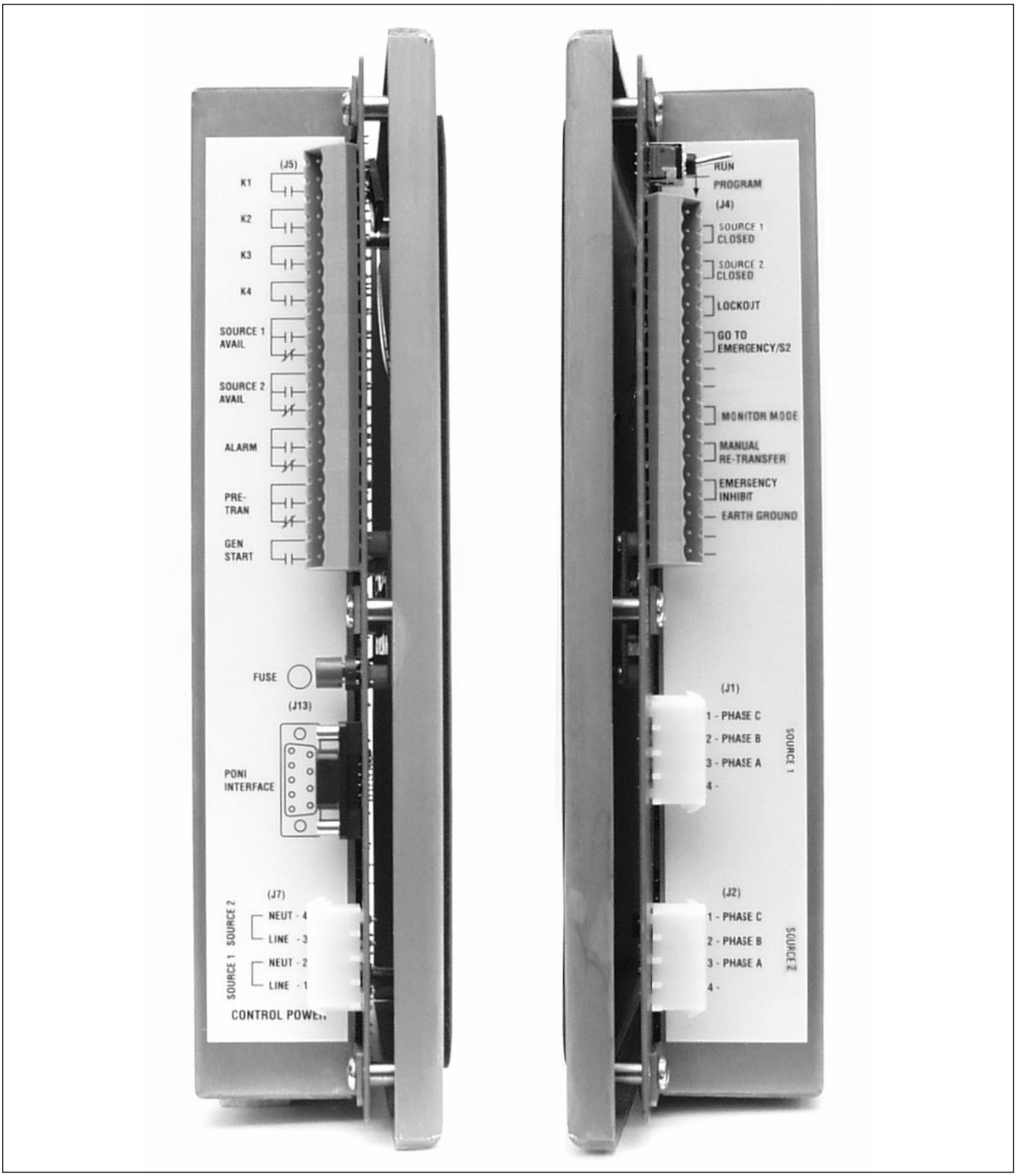

Figure 2-3 ATC-400 Controller (Left and Right Side Views)

Katolight Service - Master Repair Manual - Page 4004

2.5 SPECIFICATION SUMMARY

Table 2.1 ATC-400 Controller Specifications

Input Control Voltage	65 VAC to 145 VAC	50/60 Hz
Voltage Measurements of	Source 1 V_{AB} Source 1 V_{CA} Source 2 V_{BC}	Source 1 V_{BC} Source 2 V_{AB} Source 2 V_{CA}
Voltage Measurement Range	0 to 360 VAC RMS (50/60Hz)	
Voltage Measurement Accuracy	± 1% of Full Scale	
Frequency Measurements of	Source 1 (Normal), Source 2 (Emergency)	
Frequency Measurement Range	40 Hz to 70 Hz	
Frequency Measurement Accuracy	± 0.3 Hz over the measurement range	
Undervoltage Dropout Range	50% to 97% of the nominal system voltage	
Undervoltage Pickup Range	(Dropout +2%) to 99% of the nominal system voltage	
Overvoltage Dropout Range	105% to 120% of the nominal system voltage	
Overvoltage Pickup Range	103% to (Dropout -2%) of the nominal system voltage	
Underfrequency Dropout Range	90% to 97% of the nominal system frequency	
Underfrequency Pickup Range	(Dropout + 1Hz) to 99% of the nominal system frequency	
Overfrequency Dropout Range	103% to 110% of the nominal system frequency	
Overfrequency Pickup Range	101% to (Dropout - 1Hz) of the nominal system frequency	
Operating Temperature Range	-20°C to + 70°C	
Storage Temperature Range	-30°C to + 85°C	
Operating Humidity	0 to 95% relative humidity (non-condensing)	
Generator Start Relay:	5A, 1/6 HP @ 250VAC 5A @ 30VDC with a 150W maximum load	
Alarm Relay	10A, 1-3 HP @ 250VAC 10A @ 30VDC	
Applicable Testing	UL Recognized Component Meets Intent of UL991 Meets IEC 1000-4-2, 1000-4-3, 1000-4-4, 1000-4-5, 1000-4-6, 1000-4-11 Meets CISPR 11 Complies with FCC Part 15, Class A	
Enclosure Compatibility	NEMA 1 NEMA 3R (outdoor) UV Resistant ATC-400 Faceplate	

Katolight Service - Master Repair Manual - Page 4005

SECTION 3: OPERATOR PANEL

3.1 GENERAL

The operator panel, which is normally accessible from the outside of a panel or door, provides a means for being alerted to specific conditions, receiving functional help, programming and parameter monitoring/selecting. For the purpose of familiarization, the panel is divided into three sub-sections and discussed individually:

- LEDs
- Pushbuttons
- Display Window

3.2 LEDS

The five LED's indicate the actual status of both sources.

Unit Status LED
This green LED blinks at a rate of once per second, indicating that the ATC-400 is operating correctly. The LED blinks at a faster rate when the Run/Program switch is in the Program position and the setpoints are being displayed. If the LED is not lit or is lit continuously, a problem may be indicated.

Source 1 Available LED
This amber LED is lit when Source 1 (Normal Source) meets the user programmed setpoint criteria.

Source 1 Connected LED
This green LED displays the status of the transfer switch position. It illuminates when the load is connected to Source 1 (normal position). Indication of the transfer switch in normal position is accomplished by sensing the closed A-contact of the normal breaker auxiliary.

Emergency Source Available LED
This amber LED is lit when the Source 2 (Emergency Source) meets the user programmed setpoint criteria.

Emergency Source Connected LED
This red LED displays the status of the transfer switch position. It illuminates when the load is connected to Source 2 (emergency position). Indication of the transfer switch in emergency position is accomplished by sensing the closed A-contact of the emergency breaker auxiliary.

3.3 PUSHBUTTONS

There are five front panel membrane type pushbuttons. Pushbuttons accomplish their function when pressed and released. Certain pushbuttons, like the Increase and Decrease Pushbuttons, will also continue to scroll if they are pressed and not released.

Engine Test Pushbutton
When the Engine Test Pushbutton is pressed and released one time with Source 1 (Normal) available and connected, the following message will be displayed "Start Test?". If the Engine Test pushbutton is pressed another time the controller will start an engine test sequence. Two modes of engine test are available (Load Exercising with failsafe and No Load Exercising) and the test will be conducted using the Plant Exerciser settings.

Upon test initiation, the generator start relay is energized after TDES timeout. If a load test is programmed, all time delays will be executed in their normal sequence and the Engine Test will be performed per the Plant Exerciser settings. If you do not wish to perform a Plant Exerciser test, push the "Increase and Decrease" pushbuttons at the same time to reset the Engine Test operation. If the Engine Test pushbutton is not pressed for 2 1/2 minutes and it will reset the Engine Test operation automatically. After the system is transferred to source 2, it can be aborted at any time by pressing the Engine Test pushbutton again. All time delays will be executed in their normal sequence during the transfer back to Source 1, including TDEC. If the test is not aborted, it will run for the duration of the Test Engine Run setting before returning to Source 1, if available. For a no load test, no transfer will occur and the engine will run for the programmed Test Engine Run time.

NOTICE

The Plant Exerciser feature allows for automatic programming of the desired test cycle on a daily, 7-day, 14-day, or 28-day basis. If the switch is unable to process either a plant Exerciser request or the Engine Test pushbutton itself due to transfer switch status, the request is ignored.

Step Pushbutton
By pushing the Step key, the LCD display will advance through the voltage(s), frequency, and status condition of the normal source, then the emergency source, then the time and date information, then the history information, and then the setpoints. The information on the LCD display shall advance one (1) step through the displayed information cycle with each push of the Step key.

When the setpoints are displayed and the ATC-400 is in the Program mode, the Unit Status LED will blink faster and allow the user to change the selected setpoint using the Decrease or Increase keys.

Increase Pushbutton
When the ATC-400 is in the Program mode, pressing

Katolight Service - Master Repair Manual - Page 4006

and releasing the Increase button will cause the displayed setpoint to be increased by one. The Increase Pushbutton will continue to scroll if it is pressed and not released. If held down for more than 3 seconds, the setpoint value will continue increasing by ten.

Decrease Pushbutton
When the ATC-400 is in the Program mode, pressing and releasing the Decrease button will cause the displayed setpoint to be decreased by one. The Decrease Pushbutton will continue to scroll if it is pressed and not released. If held down for more than 3 seconds, the setpoint value will continue decreasing by ten.

Help/Lamp Test Pushbutton
The Help/Lamp Test key can be pressed for a detailed description of the message that is currently being displayed on the LCD display. The help message will scroll across the bottom of the display, and can be aborted by a second push of the Help/Lamp Test key.

If the display is blank when the Help/Lamp Test key is pressed, all of the LED's will momentarily illuminate then the following information will be scrolled across the display:
1. Hardware revision number
2. Firmware version number
3. Serial number
4. Feature code - a decodable 9-digit string listing all optional features programmed in the controller.

The customer may be asked for this information by Cutler-Hammer during a troubleshooting or return process.

Increase and Decrease Pushbutton Simultaneously
Simultaneously pressing and releasing the Increase and Decrease Pushbuttons will reset the Alarm function. In addition, if both keys are pressed simultaneously while viewing any of the historical logged values, the value resets to zero.

Step and Increase Pushbutton Simultaneously
Simultaneously pressing and releasing the Step and Increase Pushbuttons will cause the display information to jump to the beginning of the setpoints menu. If the ATC-400 is already displaying setpoints, the display will jump to the end of the setpoints menu.

Step and Help/Lamp Test Pushbutton Simultaneously
Simultaneously pressing the Step and Help/Lamp Test Pushbuttons while TDNE or TDEN is counting down will bypass the TDNE and/or TDEN functions.

3.4 DISPLAY WINDOW

The ATC-400 Controller includes a two-line 16-character alphanumeric LCD display. The display has a green high contrast background that allows clear visibility of any information displayed. The display is continuously lit for clear visibility under poorly lit or no light conditions.

Six different displays can be presented via the Display Window:
- Status Display
- Source 1 Display
- Source 2 Display
- Time/Date Display
- History Display
- Setpoints Display

NOTICE

Although a wide variety of parameters and setpoints can be displayed, they are not displayed if they were not originally ordered and programmed.

NOTICE

Whether viewing or programming, the display is blanked if no pushbutton activity is detected for approximately 2 1/2 minutes.

3.4.1 STATUS DISPLAY

This display provides messages regarding anything that is presently changing or happening to the switch's status, including source information, timer countdown, and failure reports. Refer to Appendix A for a complete list of Status Display messages.

3.4.2 SOURCE 1 AND 2 DISPLAYS

These displays indicate the present status of the sources in terms of voltage and frequency. If the source is available, the condition display will be "SOURCE 1 GOOD" or "SOURCE 2 GOOD". If it is unavailable, one of the following possible conditions will be shown:
SOURCE 1 U-V SOURCE 2 U-V
The source voltage has dropped below the dropout setting and not risen above the pickup setting.

SOURCE 1 O-V SOURCE 2 O-V
The source voltage has risen above the dropout setting and not dropped below the pickup setting.

SOURCE 1 U-F SOURCE 2 U-F
The source frequency has dropped below the dropout setting and not risen above the pickup setting.

SOURCE 1 O-F SOURCE 2 O-F
The source frequency has risen above the dropout setting and not dropped below the pickup setting.

Katolight Service - Master Repair Manual - Page 4007

3.4.3 TIME/DATE DISPLAY

This display indicates real time in terms of hours, minutes, and seconds, and month, day, and year. It also indicates individual time and date items for programming purposes. The day of the week can also be set with 1=Sunday, 2=Monday, etc.

3.4.4 HISTORY DISPLAY

This display indicates historical and cumulative values as follows:

Engine Run Time
This counter will log the generator run time in hours. Time will start being logged at the time the GEN START contacts are closed, and it will stop as soon as they are opened. This counter will count up to 9999 hours and then turn over. When viewing this value, it can be reset to zero by pressing the Increase and Decrease pushbuttons at the same time.

Source 1 Connected Time
This counter logs the time in hours that Source 1 has been connected to the load. Time will be logged while the SOURCE 1 CLOSED control input is in the "connected" state. This counter will count up to 9999 hours and then turn over. When viewing this value, it can be reset to zero by pressing the Increase and Decrease pushbuttons at the same time.

Source 2 Connected Time
This counter logs the time in hours that Source 2 has been connected to the load. Time will be logged while the SOURCE 2 CLOSED control input is in the "connected" state. This counter will count up to 9999 hours and then turn over. When viewing this value, it can be reset to zero by pressing the Increase and Decrease pushbuttons at the same time.

Source 1 Available Time
When Source 1 meets the voltage and frequency setpoint criteria, this counter logs the time in hours. This counter will count up to 9999 hours and then turn over. When viewing this value, it can be reset to zero by pressing the Increase and Decrease pushbuttons at the same time.

Source 2 Available Time
When Source 2 meets the voltage and frequency setpoint criteria, this counter logs the time in hours. This counter will count up to 9999 hours and then turn over. When viewing this value, it can be reset to zero by pressing the Increase and Decrease pushbuttons at the same time.

Load Energized Time
When either of the two sources is connected to the load and the connected source is available, this counter will start logging the time in hours. This counter will count up to 9999 hours and then turn over. When viewing this value, it can be reset to zero by pressing the Increase and Decrease pushbuttons at the same time.

Total Number of Transfers
This counter logs the number of transfer cycles that occur. This counter will count up to 9999 hours and then turn over. When viewing this value, it can be reset to zero by pressing the Increase and Decrease pushbuttons at the same time.

Reason/Date/Time for 16 Most Recent Transfers
The 16 most recent transfer events are stored in history and may be viewed at the front panel display as follows:

- Use the Step pushbutton to step to the "TRANSFER HISTORY" message.
- Press the Increase pushbutton to display the most recent transfer event, "T01", along with the type and cause of the event.
- Press the Decrease pushbutton to display the date and time of the event.
- Continually pressing the Decrease pushbutton will cycle the display between the event display and the date/time of event display.
- Press the Increase pushbutton to display the next most recent transfer event, "T02".
- Pressing the Step pushbutton, while viewing any of the transfer history displays, will exit the Transfer History displays.

3.4.5 SETPOINTS DISPLAY

This display indicates presently programmed setpoints. The setpoints can be altered either with the Run/Program switch in the Program position or with valid password entry. Keep in mind, if a feature was not originally ordered and programmed, it will not be displayed. Refer to Section 5 for details.

3.4.6 HELP DISPLAY

This display presents moving English language messages, explanations, and prompts to assist the operator. When the Help/Lamp Test Pushbutton is pressed and released a second time during the scrolling of a message, the message is aborted.

Katolight Service - Master Repair Manual - Page 4008

SECTION 4: OPERATION

4.1 GENERAL

This section specifically describes the operation and functional use of the ATC-400 Controller.

The practical use of and operation within each category will be discussed. In this section it is assumed that prior sections were reviewed and that operator has a basic understanding of the hardware.

4.2 AUTOMATIC MODE

The Automatic Mode of the ATC-400 Controller provides for automatic transfer and re-transfer from source to source as dictated by the features supplied and their programmed setpoint values. It provides a summary of the ATC-400 Controller intelligence and supervisory circuits which constantly monitor the condition of both normal and emergency power sources thus providing the required intelligence for transfer operations. These circuits, for example, automatically initiate an immediate transfer of power when power fails or voltage level drops below a preset value. Exactly what the ATC-400 Controller will initiate in response to a given system condition depends upon the combination of standard and selected optional features.

4.3 MONITOR MODE

Monitor Mode is a special operating mode in which the ATC-400 does not provide control for transfer operations. The ATC-400 will, however, continuously monitor both source voltages and frequencies.

The ATC-400 will be in Monitor Mode when the "Monitor Mode" control input is in the "Connected" state as described in paragraph 4.4. While in the "Monitor Mode" of operation, the ATC-400 will display "ATS NOT IN AUTOMATIC".

4.4 CONTROL INPUTS

The control inputs of the ATC-400 Controller are wetted DC inputs. Each control input provides 50 volts at 10 mA. Refer to Figure 2.3 for a graphical representation and position of all input connections. The input "state" definitions are as follows:

"Connected" - when the input is shorted by an external contact or connection.
"Unconnected" - when the input is not shorted by an external contact or connection.

NOTICE

In applications where long wire runs are necessary to provide the "Connected" signal, it may be necessary to install shunt resistors to eliminate unwanted noise that affects the control inputs. The resistor would be installed between the bottom input of the control input and earth ground. For example, if noise was affecting the Go To Emergency/S2 input, the shunt resistor would be installed from J4-8 (bottom input) to J4-17 (ground). The recommended resistor value is 10k, 1/4W, 5%. If a 10k resistor is not available, the recommended resistance range is from 4.7k to 15k.

The inputs are as follows:

Source 1 Closed
When the input is in the "Connected" state, it indicates to the ATC-400 that the Source 1 device is closed. When this input is in the "Unconnected" state, it indicates to the ATC-400 that the Source 1 device is open. This input is typically wired to the Source 1 device auxiliary contact that is closed when the Source 1 device is closed. This input is located on pins 1 and 2 of connector J4.

Source 2 Closed
When the input is in the "Connected" state, it indicates to the ATC-400 that the Source 2 device is closed. When this input is in the "Unconnected" state, it indicates to the ATC-400 that the Source 2 device is open. This input is typically wired to the Source 2 device auxiliary contact that is closed when the Source 2 device is closed. This input is located on pins 3 and 4 of connector J4.

Lockout (Requires Optional Feature 16)
When the "Lockout" input is in the "Unconnected" state, the ATC-400 will not permit an automatic transfer operation. When the "Lockout" input is in the "Unconnected" state, the LCD Display will display "LOCKOUT" on line 1 and "OVERCURRENT TRIP" on line 2.

When the "Lockout" input is in the "Connected" state, the ATC-400 will permit automatic transfer operation. This input is typically wired to the normally closed Source 1 and Source 2 devices' alarm contact that opens when one of the devices has tripped due to a fault current.

The "Lockout" input is selectable as enabled or disabled via factory control only. This input is located on pins 5 and 6 of connector J4.

Katolight Service - Master Repair Manual - Page 4009

Go To Emergency / S2 (Requires Optional Feature 26D)
When the "Go To Emergency/Source 2" input is in the "Connected" state, the ATC-400 controller will initiate a generator start and transfer to Source 2. The ATC-400 will maintain connection to Source 2 until the input changes to the "Unconnected" state, upon which it will initiate a re-transfer to Source 1. When the "Go To Emergency/Source 2" input is in the "Connected" state, the LCD Display will display "GO TO EMERG/S2" on line 2 of the LCD Display screen constantly. This operation is "Failsafe".

When the "Go to Emergency/S2" input is in the "Unconnected" state, the ATC-400 controller will be in a normal automatic operation mode.

If the Load Shed From Emergency feature is enabled, and the "Emergency Inhibit" input is in the "Unconnected" state, the ATC-400 will ignore the "Go To Emergency/S2" input.

The "Go To Emergency/Source 2" input is selectable as enabled or disabled via factory control only. This input is located on pins 7 and 8 of connector J4.

Monitor Mode
When the "Monitor Mode" input is in the "Connected" state, the ATC-400 controller will monitor source voltages and frequencies but will not provide any control capabilities. While in the "Monitor Mode" of operation, the ATC-400 LCD Display will display "ATS NOT IN AUTOMATIC".

When the "Monitor Mode" input is in the "Unconnected" state operation of the ATC-400 will not be affected.

The "Monitor Mode" input is always enabled. This is NOT a Failsafe operation. This input is located on pins 11 and 12 of connector J4.

Manual Re-transfer (Requires Optional Feature 29J)
When the "Manual Re-Transfer" input is in the "Connected" state while the ATC-400 is connected to Source 2, the ATC-400 will initiate a re-transfer if the following two conditions are true:

a) Manual Re-Transfer was enabled via factory control
b) The Manual Re-transfer setpoint is equal to 1.

If the Manual Re-transfer setpoint is equal to one (1) and the "Source 2 Closed" input is in the "Connected" state, the LCD Display will display "MAN RETRANSFER REQUIRED."

When the "Manual Re-Transfer" input is in the "Unconnected" state, the operation of the ATC-400 will not be affected.

The "Manual Re-transfer" input is selectable as enabled or disabled via factory control. If factory enabled then the "Manual Re-transfer" input has a user accessible programmable setpoint as follows: zero (0) equals automatic return, one (1) equals pushbutton return. This is a "failsafe" operation. This input is located on pins 13 and 14 of connector J4.

Emergency Inhibit (Requires Optional Feature 36)
When the "Emergency Inhibit" input is in the "Unconnected" state, the ATC-400 is prohibited from sending a signal to transfer to Source 2. If the "Emergency Inhibit" input changes to the "Unconnected" state while the Source 2 Closed input is in the "Connected" state, then the ATC-400 will send a signal to re-transfer to Source 1. If Source 1 is not available, the ATC-400 will send a signal to "Transfer to Neutral."

When the "Emergency Inhibit" input is in the "Connected" state, operation of the ATC-400 will not be affected.

The "Emergency Inhibit" input will take priority over the "Go To Emergency/S2" input in the case when "Emergency Inhibit" input is in the "Unconnected" state and "Go To Emergency/S2" is in the "Connected" state. The ATC-400 will respond to the "Emergency Inhibit" input and ignore the "Go To Emergency/S2" input.

The "Emergency Inhibit" input is selectable as enabled or disabled via factory control. This is a "failsafe" operation. This input is located on pins 15 and 16 of connector J4.

4.5 RELAY OUTPUTS

The control outputs of the ATC-400 Controller are dry relay contacts. The dielectric rating for each relay output is a minimum of 1500 VAC. Refer to Figure 2.3 for a graphical representation and position of all output connections. The relay functions are divided into two categories:

- Customer Connections
- Transfer Operation Contacts

4.5.1 CUSTOMER CONNECTIONS

Gen Start Output
This latching relay is the generator start relay for system configurations that use a generator on Source 2. This relay provides a Form A contact for closure of the generator start circuit. The generator start relay contacts are rated for 5A, 1/6 HP @ 250 VAC. The DC rating is 5A @ 30VDC with a 150W maximum load.

Katolight Service - Master Repair Manual - Page 4010

Source 1 Avail Output
This Form C relay is used to indicate the availability of Source 1. This relay essentially duplicates the Source 1 Available LED, meaning that the setpoint criteria have been met. The Source 1 Avail relay will be energized when Source 1 meets the definition of "Available" and de-energized when Source 1 does not meet the definition of "Available".

The full Form C contact is implemented with Common Pin 14, Normally Closed Pin 13, and Normally Open Pin 12 of Connector J5. The S1 Available relay contacts are rated for 10A, 1-3 HP @ 250 VAC. The DC rating is 10A @ 30VDC.

Source 2 Avail Output
This Form C relay is used to indicate the availability of Source 2. This relay essentially duplicates the Source 2 available status LED, meaning that the setpoint criteria have been met. The Source 2 Avail relay will be energized when Source 2 meets the definition of "Available" and de-energized when Source 2 does not meet the definition of "Available".

The full Form C contact is implemented with Common Pin 11, Normally Closed Pin 10, and Normally Open Pin 9 of Connector J5. The S2 Available relay contacts are rated for 10A, 1-3 HP @ 250 VAC. The DC rating is 10A @ 30VDC.

Alarm Output
This relay is normally de-energized to indicate an absence of an alarm state and energized to indicate the presence of an alarm condition. Alarm conditions include:

* Improper circuit breaker operation (breaker fails to open or close)
* Motor operator failure
* Unsuccessful in-phase transition
* Lockout condition
* Aborted engine test
* Aborted plant exercise

The full Form C contact of this relay may be wired to an alarm annunciator panel to indicate a problem with the ATS. Common is on Pin 8, while Normally Closed is on Pin 7, and Normally Open is on Pin 6 of Connector J5. The alarm relay contacts are rated for 10A, 1-3 HP @ 250 VAC. The DC rating is 10A @ 30VDC.

Pretransfer Output
This relay shall open/close on a timed basis (adjustable 1-120 seconds) prior to any transfer operation to allow the load to be de-energized prior to transfer in either direction. After TDNE/TDEN times out, this relay energizes and the Pretransfer timer (TD PRE-TRAN) starts timing. After TD PRE-TRAN times out, the transfer proceeds. The pretransfer relay de-energizes after the transfer is complete.

The full Form C contact of this relay is implemented. Common is on Pin 5, while Normally Closed is on Pin 4, and Normally Open is on Pin 3 of Connector J5. The pretransfer relay contacts are rated for 10A, 1-3 HP @ 250 VAC. The DC rating is 10A @ 30VDC.

4.5.2 TRANSFER OPERATION CONNECTIONS

K1, K2, K3, and K4 are factory wired to operate the transfer switch. The relay contacts for each are rated for 10A, 1/3 HP @ 250 VAC. The DC rating is 10A @ 30VDC.

K1 Relay
This Form A output is used for control of the transfer switch motor to close the Source 1 device (i.e. circuit breaker) for motor-operator transfer switches. The K1 relay momentarily energizes until the ATC-400 senses that the Source 1 device is closed, then K1 de-energizes. For SPB transfer switches, this relay opens the Source 2 device (i.e. circuit breaker) via its shunt trip. The K1 output is found on Pins 21 and 22 of Connector J5.

K2 Relay
This Form A output is used for control of the transfer switch motor to close the Source 2 device (i.e. circuit breaker) for motor-operator transfer switches. The K1 relay momentarily energizes until the ATC-400 senses that the Source 1 device is closed, then K1 de-energizes. For SPB transfer switches, this relay opens the Source 1 device (i.e. circuit breaker) via its shunt trip. The K2 output is found on Pins 19 and 20 of Connector J5.

K3 Relay
This Form A output is used for control of the SPB close coil of the Source 1 device (i.e. circuit breaker). The K3 relay momentarily energizes until the ATC-400 senses that the Source 1 device is closed, then K3 de-energizes. The K3 output is found on Pins 17 and 18 of Connector J5.

K4 Relay
This Form A output is used for control of the SPB close coil of the Source 2 device (i.e. circuit breaker). The K4 relay momentarily energizes until the ATC-400 senses that the Source 2 device is closed, then K4 de-energizes. The K4 output is found on Pins 15 and 16 of Connector J5.

4.6 OPERATING VOLTAGE AND MEASUREMENTS

The ATC-400 Controller operates directly from the line sensing inputs of the two different sources (normal and

Katolight Service - Master Repair Manual - Page 4011

emergency). The nominal operating system inputs are from 120VAC-600VAC. The standard system assumes that neutral is available and that the transfer motor can therefore be powered from an available 120 VAC source. If a neutral conductor is not available, a 120VAC supply is created by an external transformer. The unit operates on single and three phase systems with selectable frequency settings of 50Hz or 60Hz.

All voltage monitoring and measurements are true RMS measurements.

The ATC-400 Controller is capable to perform the time delay engine start function without control power for a minimum of 120 seconds.

4.7 ENGINE TEST

The Engine Test is intended to permit the periodic performance of tests of the system. The exact test conditions are determined by the programmed setpoints. The operator-selected parameters include setting the engine run time and the test mode. Refer to Table 5.1 for test programming details.

There are three test modes:

Engine Start Only Mode
When the "Engine Test" pushbutton is depressed, the LCD Display will read "START TEST?". Upon a second press of the "Engine Test" pushbutton, the ATC-400 will initiate an engine start command to start the generator. The engine run duration will be per the "Engine Run Test Time" setpoint. Transfer will not occur.

Load Transfer Mode
This will function the same as "Engine Start Only Mode" except a transfer to Source 2 will occur. On completion of the test, a re-transfer will occur.

Disable Mode
The Engine Test pushbutton is disabled and has no effect.

If the "Number of Generators" setpoint is programmed to zero, the Engine Test pushbutton is not functional.

To start an engine test, the display window must be blank. At this point, if the initiation of a test is not desired, pressing the Increase and Decrease pushbuttons simultaneously will cancel the test. If a test is desired, the Engine Test pushbutton must be pressed a second time before 2 1/2 minutes have expired. At this time, the test will begin.

All enabled and programmed time delays will be performed per the setpoints during engine tests. The time delays are to appear on the LCD Display with "count-down to zero" when active. These include: TDES, TDNE, TDEN, TDEC, TDN, and TD-PRETRAN. All operations shall be "Failsafe" as defined in Section 3.1.

When an engine test is in progress, it may be aborted the following ways:

1) By pressing the "Engine Test" pushbutton.
2) If the Emergency Source does not become available within 30 seconds of the ATC-400 providing the engine start command.
3) If, during the TDNE countdown, the Emergency Source goes unavailable more than three times. (Each time, TDNE will restart.)
4) If the Emergency Source is powering the load and it goes unavailable for more than the TDEF setting.
5) If the Normal source becomes unavailable.

When an engine test is aborted due to an unavailable source, the Alarm relay will energize, a "TEST ABORTED" message with appear on the display, and the event will be logged into the Transfer History as "Aborted Test".

4.8 PLANT EXERCISER

The plant exerciser is a feature that provides an automatic test of the generator. The test is run daily, every 7 days, every 14 days, or every 28 days with duration equal to the programmed engine test time. Two optional modes of plant exercising are available:

a) No Load Exercise
b) Load Exercising with failsafe

The time that the plant exerciser is performed is programmed with the "PE HOUR" and "PE MINUTE" setpoints where "PE HOUR" is in military time (1:00 PM = 13:00)

The test day is programmed with the "PE DAY" setpoint. The ATC-400 compares the "PE DAY" setpoint with the "WEEKDAY" setting, which is set along with the time and date. If a 7-day plant exercise is programmed, the selections are from "1 SUN" through "7 SAT".

If a 14-day plant exercise is programmed, the "PE DAY" setpoint can be set from "1 SUN" to "14 SAT" where "1 SUN" is the first Sunday of the 14-day period and "14 SAT" is the second Saturday of the 14-day period.

If a 28-day plant exercise is programmed, the "PE DAY" setpoint can be set from "1 SUN" to "28 SAT" where "1 SUN" is the first Sunday of the 28-day period and "28 SAT" is the fourth Saturday of the 28-day period.

If desired, plant exerciser can be disabled by choosing "0" for the "PE Enable" setpoint.

Katolight Service - Master Repair Manual - Page 4012

Load testing is failsafe. If the generator fails during testing for any reason, the ATC-400 will signal the transfer switch to return to normal. The ATC-400 will display “FAILSAFE” until a pushbutton is pressed.

4.9 IN-PHASE TRANSITION

In-phase transition is an open transition with both sources in-phase. An anticipatory scheme is used for controlling the circuit breakers. The advance angle is calculated based on the frequency difference between the two sources and also the response time of the breaker. This results in the optimum reconnect angle of 0 degrees for all of the frequency difference values.

Both sources must be available and the frequency difference must be less than the in-phase transition frequency difference setpoint (0.0 to 3.0 Hz). When these conditions are met, the ATC-400 will monitor the phase difference between the two sources. The synchronization timer will count down and be displayed as “SYNC TIME” while waiting for synchronization to be detected. When the phase difference is within the advance angle window, the “transfer” command is given. This is an open transition but both sources will be in-phase when the transfer occurs.

If the synchronization does not occur within a specified amount of time, the transfer will take place under delayed transition. The Alarm relay will energize and the failure will be logged into the Transfer History as either “Sync Fail - Freq” or “Sync Fail - Phase” depending on whether the frequency difference or the phase difference was excessive.

4.10 PROGRAM MODE

The ATC-400 Controller is fully programmable from the device’s faceplate once in the Program Mode. Any operator associated with programming the ATC-400 Controller will quickly discover that ATC-400 Controller programming is just a matter of simple, repetitive steps. Because of the importance placed, however, on this function and its critical relationship to the system proper functioning, Section 5 is dedicated to the Program Mode. Refer to that section and Table 5.1 for details.

4.11 COMMUNICATIONS

The ATC-400 is a PowerNet compatible device. As such, it can be remotely monitored, controlled, and programmed when equipped with a communications module. The ATC-400 is supplied with a communications port as standard. Communications is achieved by mounting a small, addressable communications module, the IPONI (Incom Product Operated Network Interface), to the back of the ATC-400 (See Figure 2.2).

PowerNet is a noise immune communications system that permits communications from the ATC-400 to a master computer via a high frequency carrier signal over a shielded twisted pair of conductors. The shielded twisted pair of conductors can extend up to 7500 feet without the use of repeaters. Communications between PowerNet compatible devices, such as ATC-400 and the master computer is made possible by the INCOM (Industrial Communications) chip, which accounts for the system’s high degree of reliability.

4.12 POWERNET COMMUNICATIONS SOFTWARE

PowerNet software provides the ability to monitor and record power distribution system data as it is occurring. PowerNet is a Microsoft Windows compatible application featuring user-friendly, menu-driven screens with easy setup and operation. Additional features include:

- System/device alarm logging and reporting
- Time/event historical data logging
- Data trending
- Information storage/retrieval by device event
- Hardware diagnostics
- Dedicated computer not required
- Security password protection
- Gateway interface for connectivity to other information networks

PowerNet also provides the following features unique to the ATC-400:

- Duplication of ATC-400 front panel mimic bus showing available and connected sources.
- Voltage and frequency measurements of Source 1 and Source 2.
- Capability to initiate an engine test.
- Updates the ATC-400 real-time clock.
- Display of all programmed setpoint values. These values may be changed and either saved to a file or downloaded to the ATC-400 over PowerNet.

NOTICE

If the ATC-400 is in the Program mode, the setpoints cannot be remotely downloaded over PowerNet.

Katolight Service - Master Repair Manual - Page 4013

SECTION 5: PROGRAMMING

5.1 INTRODUCTION

NOTICE

Although all ATC-400 Controller programmable features are addressed in this section, only those ordered by the customer and initially programmed at the factory will appear in the display for programming changes in the field.

The ATC-400 Controller is fully programmable from the device's faceplate or remotely through the communications port. Users can reprogram setpoints as well as other parameters. The time and date can be changed while the device is in either the Run mode or the Program mode. Setpoints, however, can only be changed while the device is in the Program mode.

Program mode is achieved by either setting the Run/Program switch in the back of the unit to the Program position or by entering a valid password when prompted by the Setpoints screens. The Unit Status LED will blink at a faster rate when viewing the setpoints while in Program mode.

NOTICE

While in the Program mode, the ATC-400 is never off-line and continues to function in accordance with previously programmed setpoints.

5.2 PASSWORD

To enter the program mode from the front panel, the ATC-400 Controller requires a password to prevent unauthorized persons from modifying setpoint values.

There are four screens related to the password which is a four-digit number from 0000 to 9999:

1)

CHANGE SETPOINTS?	**YES**

Use the INCREASE/DECREASE keys to select YES or NO, then use the STEP key to enter the selection and move to the next screen. If NO is selected, the next three screens will be bypassed.

2)

PASSWORD (Use Inc/Dec)	**0000**

Use the INCREASE/DECREASE keys to scroll to the desired value (0 - 9) for the first digit, then use the STEP key to enter the value and move to the next digit. Repeat for remaining three digits.

Note: The factory default password is "0400". If the password is forgotten, contact the factory for the backdoor password.

3)

CHANGE PASSWORD?	**YES**

Use the INCREASE/DECREASE keys to select YES or NO, then use the STEP key to enter the selection and move to the next screen. If NO is selected, the next screen will be bypassed.

4)

NEW PASSWORD (Use Inc/Dec)	**0000**

Use the INCREASE/DECREASE keys to scroll to the desired value (0 - 9) for the first digit, then use the STEP key to enter the value and move to the next digit. Repeat for remaining three digits.

The user then steps through the setpoint screens and can change the setpoint values. During this time, the Unit Status LED will blink at a faster rate. At the end of the setpoint screens, the user will be prompted to save the setpoints.

5.3 SETPOINTS MENU

Any setpoint values can be adjusted using the Step key to select the setpoint that needs to be changed. The setpoint value can be adjusted using Increase or Decrease keys. To save a new value to memory, set the Run/Program switch back to the Run position. Once this is completed, the controller acknowledges that the setpoint values have been programmed by momentarily displaying the message "PROGRAMMING SETPOINTS".

Katolight Service - Master Repair Manual - Page 4014

5.4 PROGRAMMABLE FEATURE/SETPOINTS

CAUTION

CHANGING THE SYSTEM NOMINAL VOLTAGE OR FREQUENCY SETPOINT WILL AUTOMATICALLY CHANGE ALL THE PICKUP AND DROPOUT SETTINGS TO THE NEW DEFAULT VALUES.

All ATC-400 Controller programmable features and associated setpoint possibilities with any required explanations are presented in Table **5.1**. Remember that only features originally ordered and factory programmed will appear in the display.

The following setpoints are programmable if the corresponding feature is programmed:

Table 5.1 Programmable Features/Setpoints

	Setpoint Value	Setpoint
TDES	0 sec to 120 sec	Time Delay Engine Start Timer
TDNE	0 sec to 1800 sec	Time Delay Normal to Emergency Timer
TDEN	0 sec to 1800 sec	Time Delay Emergency to Normal Timer
TDEC	0 sec to 1800 sec	Time Delay Engine Cooldown Timer
NOM FREQ	50 Hz or 60 Hz	System Nominal Frequency (hertz)
NOM VOLTAGE	120 VAC to 600 VAC	System Nominal Voltage (volts)
S1 UV DROP	50% to 97% of Nominal	Source 1 Undervoltage Dropout (volts)
S2 UV DROP	50% to 97% of Nominal	Source 2 Undervoltage Dropout (volts)
S1 UV PICK	(Dropout + 2%) to 99% of Nominal	Source 1 Undervoltage Pickup (volts)
S2 UV PICK	(Dropout + 2%) to 99% of Nominal	Source 2 Undervoltage Pickup (volts)
S1 OV DROP	105% to 120% of Nominal	Source 1 Overvoltage Dropout (volts)
S2 OV DROP	105% to 120% of Nominal	Source 2 Overvoltage Dropout (volts)
S1 OV PICK	103% of Nominal to (Dropout - 2%)	Source 1 Overvoltage Pickup (volts)
S2 OV PICK	103% of Nominal to (Dropout - 2%)	Source 2 Overvoltage Pickup (volts)
S1 UF DROP	90% to 97% of Nominal	Source 1 Underfrequency Dropout (hertz)
S2 UF DROP	90% to 97% of Nominal	Source 2 Underfrequency Dropout (hertz)
S1 UF PICK	(Dropout + 1 Hz) to 99% of Nominal	Source 1 Underfrequency Pickup (hertz)
S2 UF PICK	(Dropout + 1 Hz) to 99% of Nominal	Source 2 Underfrequency Pickup (hertz)
S1 OF DROP	103% to 110%	Source 1 Overfrequency Dropout (hertz)
S2 OF DROP	103% to 110%	Source 2 Overfrequency Dropout (hertz)
S1 OF PICK	101% to (dropout - 1 Hz)	Source 1 Overfrequency Pickup (hertz)
S2 OF PICK	101% to (dropout - 1 Hz)	Source 2 Overfrequency Pickup (hertz)
TDN	0 sec to 120 sec	TDN Timer
PLANT EXER-	OFF, DAILY, 7-DAY, 14-DAY, or 28-DAY	Plant Exerciser Programming
PE LOAD XFR	0 or 1 (1 = yes)	Plant Exerciser Load Transfer
PE DAY	SUN, MON, TUE, WED, THU, FRI, or SAT	Plant Exerciser Day of Week
PE HOUR	0 to 23	Plant Exerciser Hour
PE MINUTE	0 to 59 minutes	Plant Exerciser Minute
MAN-RETRAN	0 or 1 (0 = auto, 1 = pushbutton return)	Manual re-transfer mode
COMMIT TDNE	0 or 1 (1 = committed)	Commit to transfer in TDNE
TEST MODE	0, 1, or 2 (0 = engine start only,	Test mode
	1 = load transfer, 2 = disable)	
TER	0 min to 600 min	Engine run test time in minutes
TPRE	1 sec to 120 sec	Pretransfer delay timer
NUM OF GENS	0 or 1	Number of generators
PHASES	1 or 3	Three phase or single phase
PT RATIO	2:1 to 500:1	PT ratio
TDEF	0 sec to 6 sec	Time Delay Emergency Fail Timer
IN-PHASE	0 or 1	In-phase Transition Enable/Disable
IP FREQ DIFF	0.0 Hz to 3.0 Hz	In-phase Transition Frequency Difference
SYNC TIME	1 min to 60 min	In-phase Transition Synchronization Timer

Katolight Service - Master Repair Manual - Page 4015

SECTION 6: TROUBLESHOOTING AND MAINTENANCE

6.1 LEVEL OF REPAIR

This manual is written with the assumption that only transfer switch system troubleshooting will be performed. If the cause of malfunction is traced to an ATC-400, the unit should be replaced with a new unit. The malfunctioning unit should then be returned to Cutler-Hammer for factory repairs.

6.2 ATC-400 DEVICE TROUBLESHOOTING

The Troubleshooting Guide (Table **6.1**) is intended for service personnel to identify whether a problem being observed is external or internal to the unit. For assistance with this determination, contact Cutler-Hammer. If a problem is identified to be internal, the unit should be returned to the factory for replacement.

Table 6.1 Troubleshooting Guide

Symptom	Probable Cause	Possible Solution(s)
All front panel indicator LED's are off.	Control power is deficient or absent.	Verify that control power is connected at J7 and that it is within specifications.
	ATC-400 is malfunctioning.	Replace the unit.
"Unit Status" LED is not blinking.	Control power is deficient or absent.	Verify that control power is connected at J7 and that it is within specifications.
	ATC-400 is malfunctioning.	Replace the unit.
One or more voltage phases read incorrectly.	Incorrect wiring.	Verify voltage with multimeter. Check wiring.
	ATC-400 is malfunctioning.	Replace the unit.
Front panel pushbuttons do not work.	Bad connection inside the ATC-400.	Replace the unit.
Unit did not accept new setpoints via front panel.	Operator error.	Change setpoints with switch in Program position. Return switch to Run position when done.
	No pushbuttons pressed for 2.5 minutes.	Avoid intervals of 2.5 minutes of inactivity with pushbuttons when changing setpoints.
Source 1 or Source 2 is not available when it should be.	Voltage and/or frequency are not within setpoint values.	Verify voltage and/or frequency with multimeter. Check programmed setpoint values.
Unit displays "LOCK-OUT".	Circuit breaker tripped.	Check for overload/short circuit condition.
	Maintenance Selector Switch is in disable position.	Check Maintenance Selector Switch.
	Lockout circuit wiring problem.	Check lockout circuit wiring.

Katolight Service - Master Repair Manual - Page 4016

Symptom	Probable Cause	Possible Solution(s)
Unit displays “SOURCE 1 DEVICE”.	Source 1 breaker/contactor did not open when it was commanded to open.	Check Source 1 circuit breaker shunt trip (ST) wiring.
	Source 1 breaker/contactor did not close when it was commanded to close.	Check Source 1 circuit breaker spring release (SR) wiring.
	Source 1 Closed contacts did not open when Source 1 breaker opened.	Check Source 1 Closed control input wiring on J4-1,2.
	Source 1 Closed contacts did not close when Source 1 breaker closed.	Check Source 1 Closed control input wiring on J4-1,2.
Unit displays “SOURCE 2 DEVICE”.	Source 2 breaker/contactor did not open when it was commanded to open.	Check Source 2 circuit breaker shunt trip (ST) wiring.
	Source 2 breaker/contactor did not close when it was commanded to close.	Check Source 2 circuit breaker spring release (SR) wiring.
	Source 2 Closed contacts did not open when Source 2 breaker opened.	Check Source 2 Closed control input wiring on J4-3,4.
	Source 2 Closed contacts did not close when Source 2 breaker closed.	Check Source 2 Closed control input wiring on J4-3,4.
Unit fails to communicate over PowerNet.	Incorrect or conflicting address set on IPONI.	Check that IPONI has a unique address on the system and that software is addressing proper unit.
	Communications wiring errors.	Verify wiring is in conformance to PowerNet wiring.
	Blown fuse, F1.	Check and replace fuse, F1, if necessary.
	IPONI failure	Replace the IPONI.
	ATC-400 is malfunctioning.	Replace the unit.
Remote downloading of setpoints over PowerNet is unsuccessful.	Run/Program switch is not in the Run position.	Set Run/Program switch to Run position.
	PowerNet communications error.	See “Unit fails to communicate over PowerNet.”

Katolight Service - Master Repair Manual - Page 4017

Symptom	Probable Cause	Possible Solution(s)
Unit will not perform an Engine Test.	Engine Test pushbutton was not pressed twice.	Press Engine Test pushbutton twice to initiate test.
	Display is not blank before initiating test.	Use Step pushbutton to step to blank status display. If a timer is timing down, wait until it is done.
	Engine Test setpoint is set to Disable (value of “2”).	Re-program Engine Test setpoint.
	Number of Generators setpoint is set to 0.	Re-program Number of Generators setpoint.
	Generator became unavailable when connected to load.	Increase Time Delay Emergency Fail (TDEF) timer setpoint.
	Generator became unavailable before connecting to load.	Check generator for proper function.
Plant Exerciser failed to exercise.	Incorrect date or time setting.	Verify real time clock settings for time and date.
	Incorrect setpoint programmed for PE DAY, PE HOUR, and/or PE MINUTE.	Re-program PE DAY, PE HOUR, and/or PE MINUTE setpoint.
	Generator voltage and/or frequency did not become available within 30 seconds of engine starting.	Verify voltage and/or frequency with multimeter. Check programmed setpoint values. Check engine maintenance.
	Generator became unavailable when connected to load.	Increase Time Delay Emergency Fail (TDEF) timer setpoint.
	Generator became unavailable before connecting to load.	Check generator for proper function.
Engine fails to start after TDES times out.	Incorrect wiring.	Check wiring between Gen Start relay (J5-1,2) and engine.
	Gen Start relay contacts not closed.	Replace the unit.
	Engine did not start.	Check generator for proper function.

Katolight Service - Master Repair Manual - Page 4018

6.3 ATC-400 REPLACEMENT

Follow these procedural steps to replace the ATC-400:

Step 1: Turn off control power at the main disconnect or isolation switch of the control power supply. If the switch is not located in view from the ATC-400, lock it out to guard against other personnel accidentally turning it on.

Step 2: Verify that all “foreign” power sources wired to the ATC-400 are de-energized. These may also be present on some of the terminal blocks.

Step 3: Before disconnecting any wires from the unit, make sure they are individually identified to assure that reconnection can be correctly performed. Make a sketch to help with the task of terminal and wire identification.

Step 4: Remove all wires and disconnect plug-type connectors.

CAUTION

SUPPORT THE ATC-400 FROM THE REAR WHEN THE SCREWS ARE LOOSENED OR REMOVED IN STEP 5. WITHOUT SUCH SUPPORT, THE UNIT COULD FALL OR THE PANEL COULD BE DAMAGED.

Step 5: Remove the four (4) mounting screws located on the four corners holding the unit and trim plate against the door or panel. These are accessed from the front of the unit. Then support the unit and remove the two center screws.

Step 6: Carefully lay the screws aside for later use.

Step 7: Mount the replacement unit.

Step 8: Reverse the procedure outlined in Steps 4 and 5.

Step 9: Using the sketch mentioned in Step 3, replace each wire at the correct terminal, and make sure each is secure. Make certain that each plug is securely seated.

Step 10: Restore control power.

6.4 MAINTENANCE AND CARE

The ATC-400 is designed to be a self-contained and maintenance-free unit. The printed circuit boards are calibrated and conformally coated at the factory. They are intended for service by factory trained personnel only.

Katolight Service - Master Repair Manual - Page 4019

APPENDIX A: DISPLAY MESSAGES FOR STATUS AND TIMERS

Display Message

TDEC	Countdown cool off timing before generator contacts are opened.
TDES	Countdown timing before generator contacts are closed.
TDNE	Countdown timing before Source 1 is disconnected before transferring to Source 2. Timing begins when Source 2 is available.
TDN	Countdown timing with both sources disconnected from the load.
TDEN	Countdown timing before Source 2 is disconnected before transferring to Source 1. Timing begins when Source 1 becomes available.
TRANSFER	Waiting for the switch to make the transfer from neutral position to the intended source.
ATS NOT IN AUTOMATIC	Control input for monitor mode is closed.
MAN RETRANSFER REQUIRED	Waiting for an input signal to complete the manual re-transfer.
LOCK-OUT OVERCURRENT TRIP	A trip condition has been detected by either breaker and the system is locked out from further transfers.
ENGINE RUN	The engine run test timer is counting down before the test is completed. Pressing the Engine Test pushbutton will abort this timer and the test.
START TEST?	To initiate an engine test sequence, press Engine Test pushbutton again or press Increase and Decrease simultaneously to clear.
WAIT FOR S2	Waiting for the generator source voltage and frequency to become available.
TD PRE-TRAN	Countdown timer while waiting for a pre-transfer acknowledge input.
LOAD SHED	Indicates that a transfer to Source 2 is inhibited.
SYNC TIME	Countdown timing in minutes while waiting for sources to synchronize during an in-phase transition.
SOURCE 1 DEVICE	Indicates that the Source 1 device (i.e. circuit breaker, contactor) failed to open or close.
SOURCE 2 DEVICE	Indicates that the Source 2 device (i.e. circuit breaker, contactor) failed to open or close.
TDEF	Countdown timing before declaring Source 2 unavailable (accounts for momentary generator fluctuations).
TEST ABORTED	Indicates that an engine test or plant exercise was aborted after three unsuccessful attempts. Source 2 did not remain available while TDNE was timing.
GO TO EMERG/S2	Indicates that the load is connected to Source 2 because the Go To Emergency/S2 control input is in the “connected” state.

Katolight Service - Master Repair Manual - Page 4020

FAILSAFE	Indicates that the load was connected to Source 2 but Source 2 became unavailable so the load transferred back to Source 1.
SETPOINTS ERROR	Memory problem with the setpoints. Contact factory.
OPTIONS ERROR	Memory problem with the factory options. Contact factory.
PROGRAMMING SETPOINTS	Setpoints are being saved in memory.
WAITING FOR NEUTRAL	Waiting for the neutral position to be reached by the switch.
WAITING FOR S1 TO OPEN	Waiting for the Source 1 device (i.e. circuit breaker) to open.
WAITING FOR S2 TO OPEN	Waiting for the Source 2 device (i.e. circuit breaker) to open.
WAITING FOR S1 TO CLOSE	Waiting for the Source 1 device (i.e. circuit breaker) to close.
WAITING FOR S2 TO CLOSE	Waiting for the Source 2 device (i.e. circuit breaker) to close.

Katolight Service - Master Repair Manual - Page 4021

APPENDIX B: OPERATIONAL FLOWCHARTS

- Utililty - Generator SPB Transfer Switch
- Utility - Generator Motor-operated Transfer Switch
- Dual-Utility SPB Transfer Switch
- Dual-Utility Motor-operated Transfer Switch
- In-phase Transition Implementation

Katolight Service - Master Repair Manual - Page 4022

UTILITY - GENERATOR SPB TRANSFER SWITCH

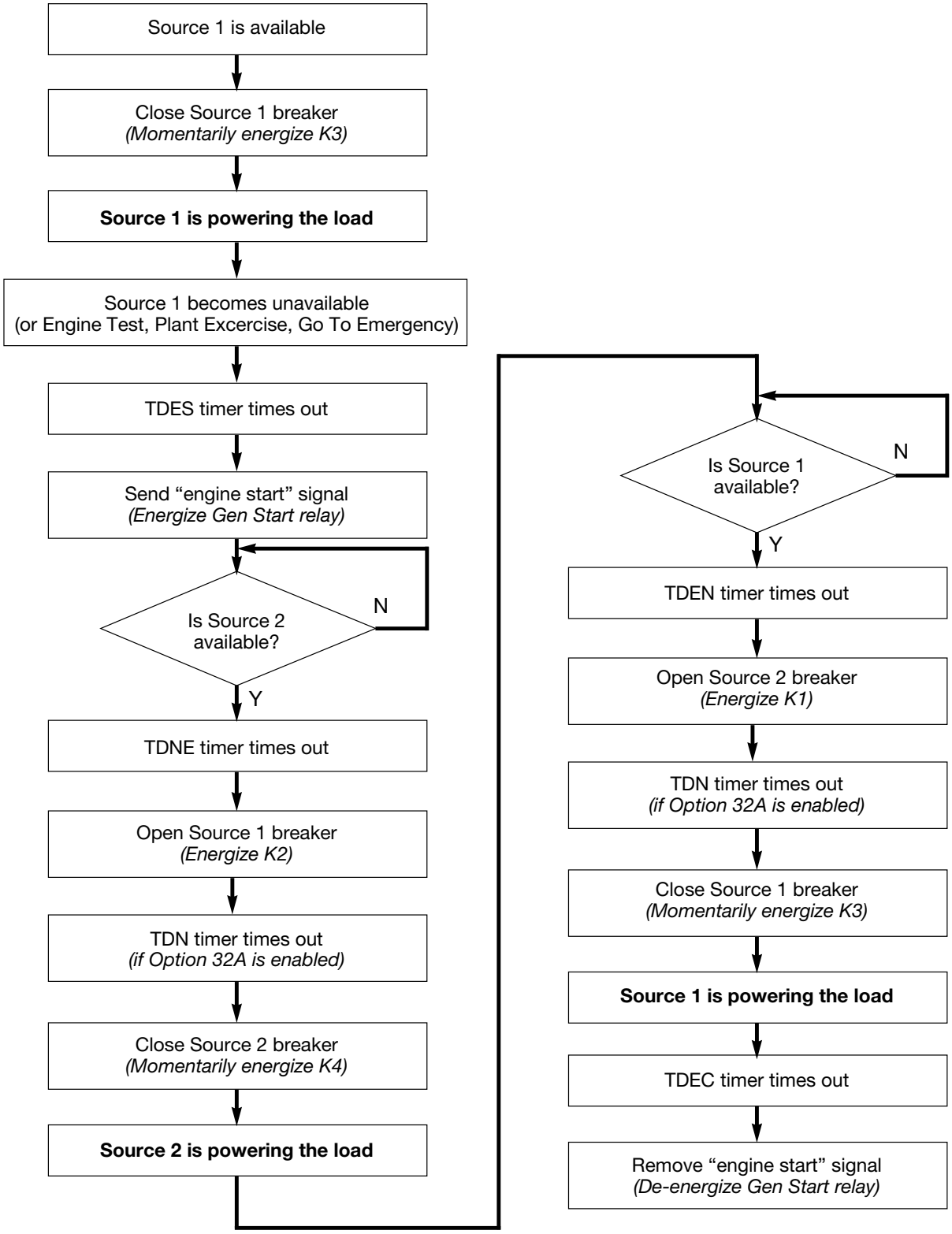

Katolight Service - Master Repair Manual - Page 4023

UTILITY - GENERATOR MOTOR-OPERATED TRANSFER SWITCH

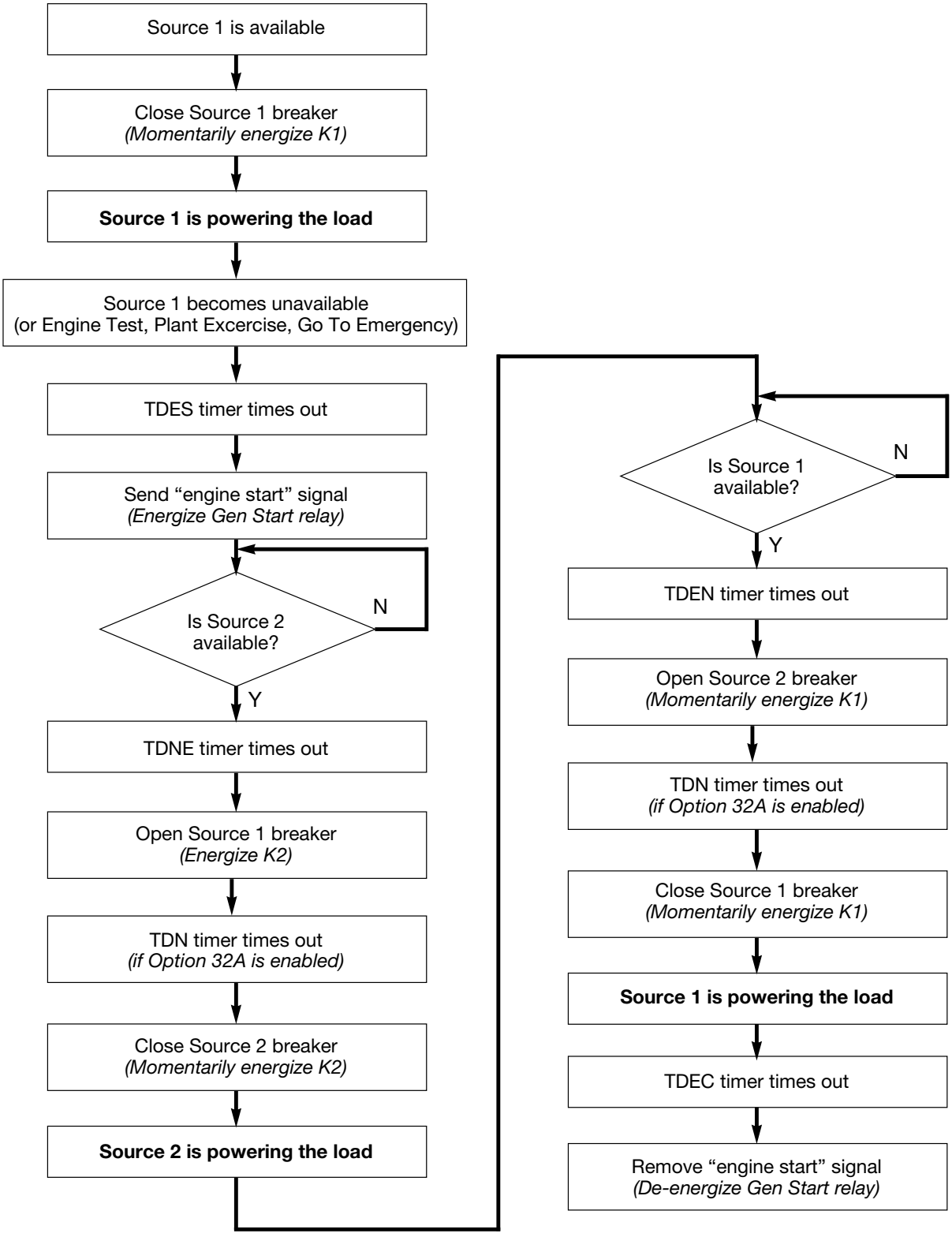

Katolight Service - Master Repair Manual - Page 4024

DUAL UTILITY SPB TRANSFER SWITCH

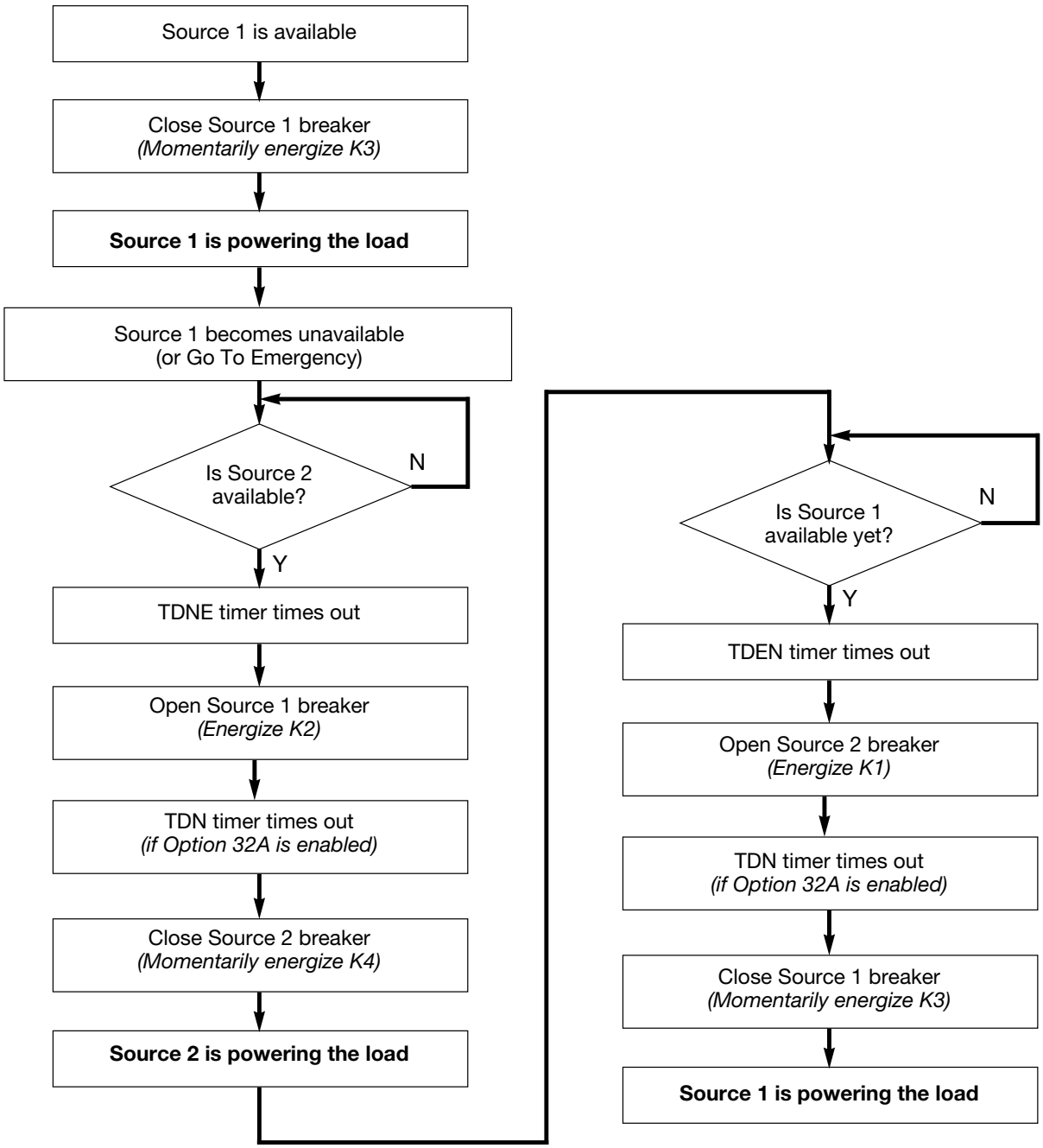

Katolight Service - Master Repair Manual - Page 4025

DUAL UTILITY MOTOR-OPERATED TRANSFER SWITCH

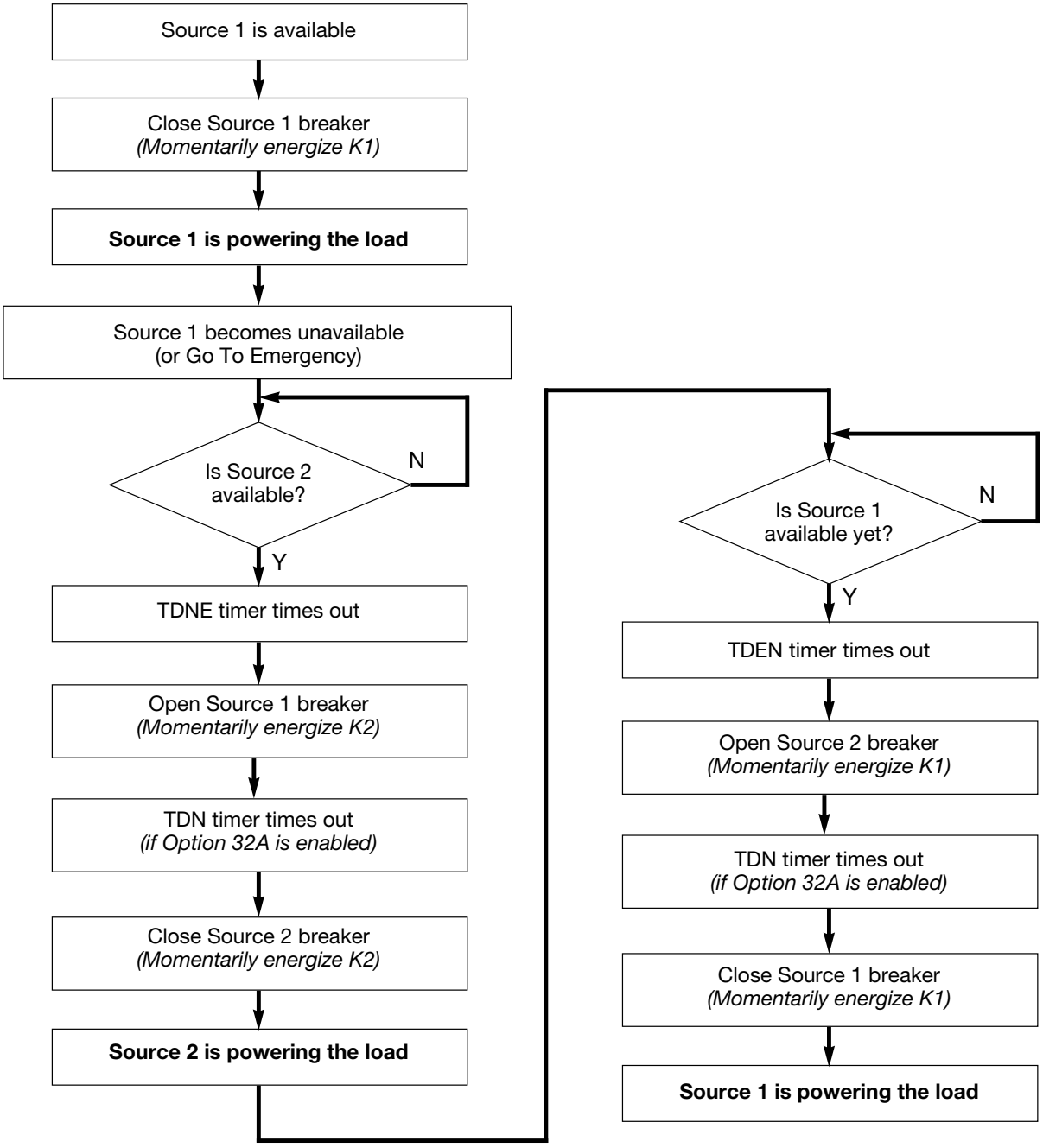

Katolight Service - Master Repair Manual - Page 4026

IN-PHASE TRANSITION IMPLEMENTATION

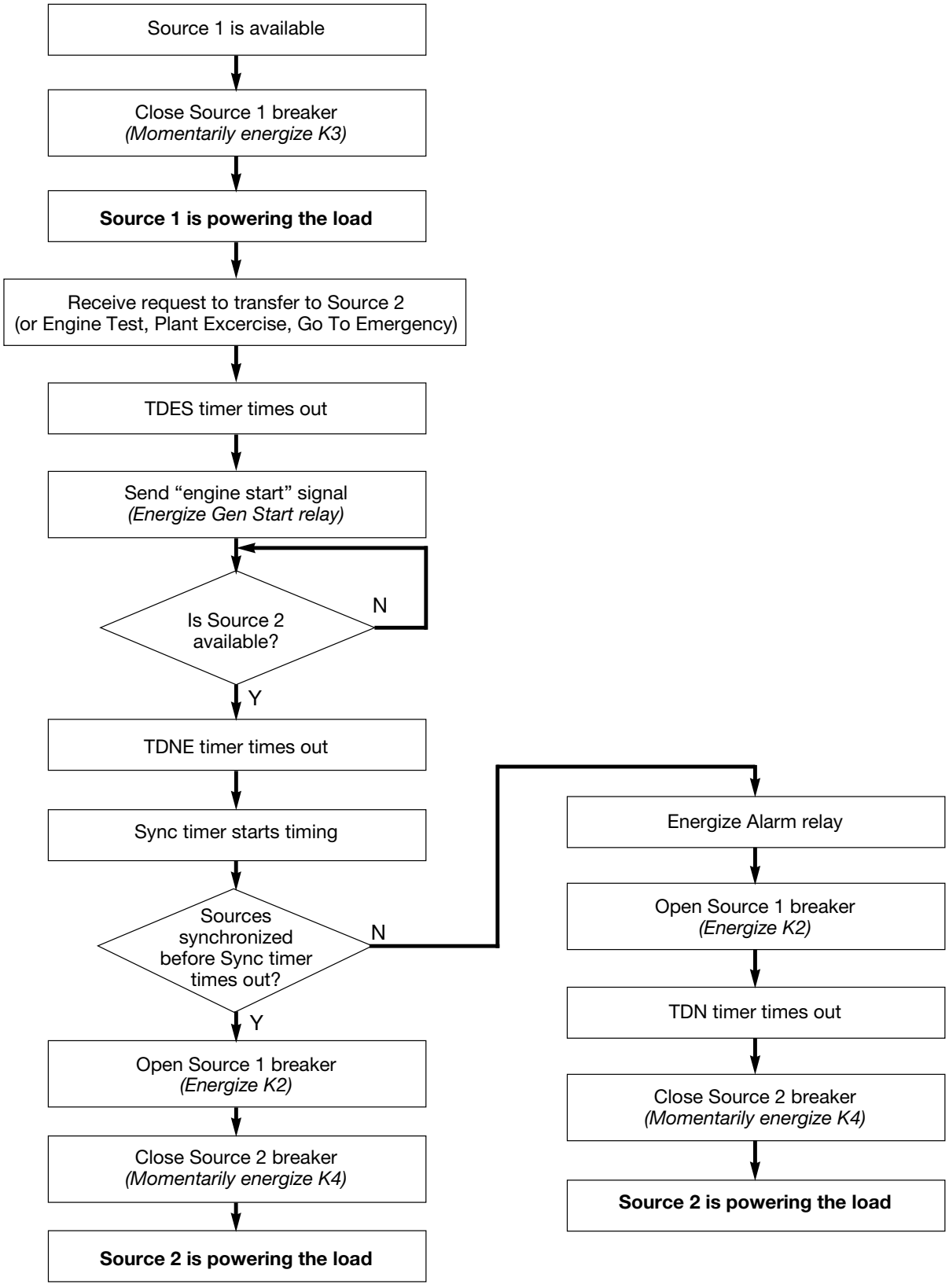

Katolight Service - Master Repair Manual - Page 4027

APPENDIX C: DISPLAY MENU TREE

- Menu 1
- Menu A
- Menu B
- Menu C
- Menu D
- Menu E

Note: Only Standard and Programmed Optional Features will appear on the LCD-based display. Optional Features which are not programmed will be skipped and will not appear on the LCD-based display.

Katolight Service - Master Repair Manual - Page 4028

Menu 1

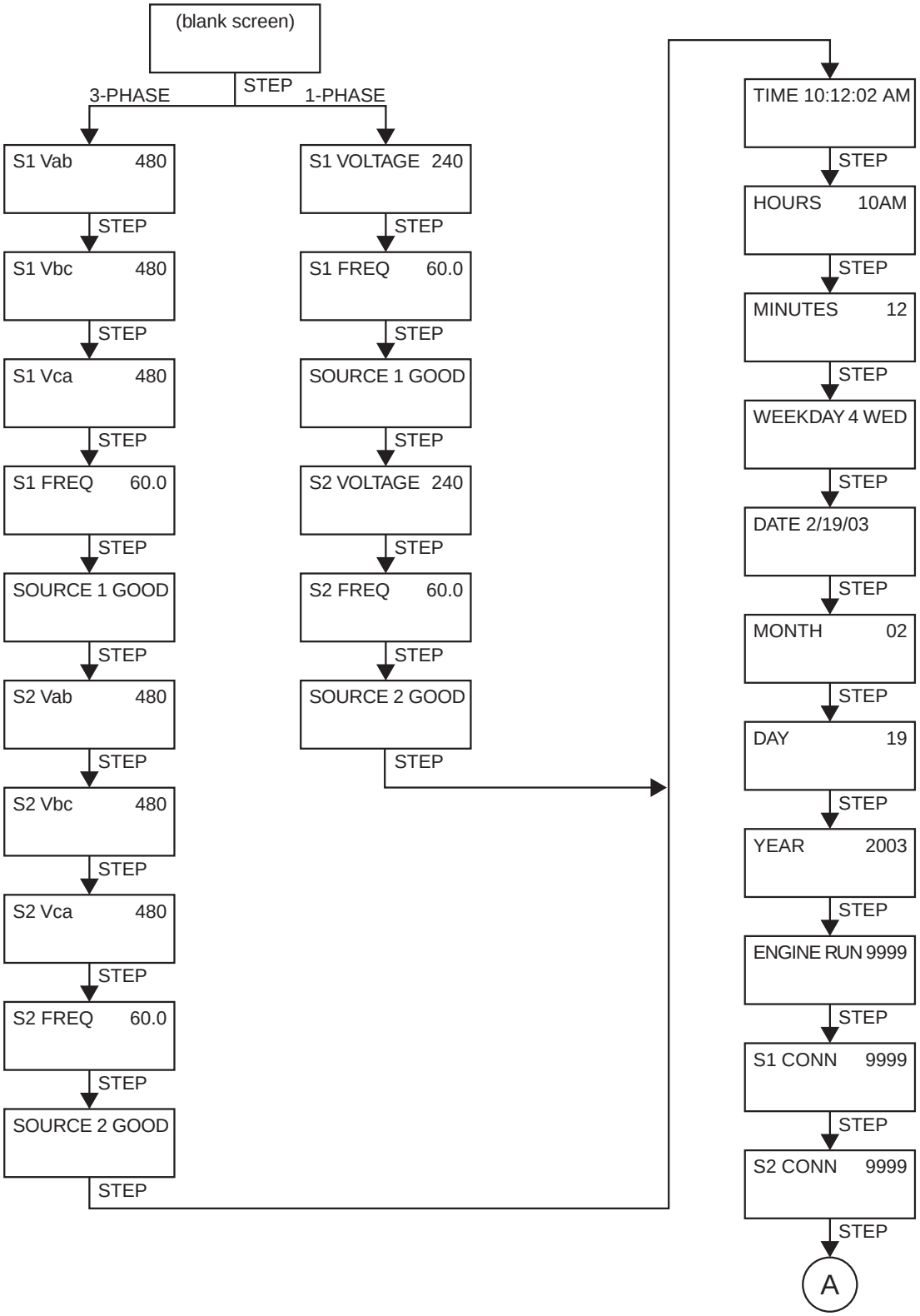

Katolight Service - Master Repair Manual - Page 4029

Menu A

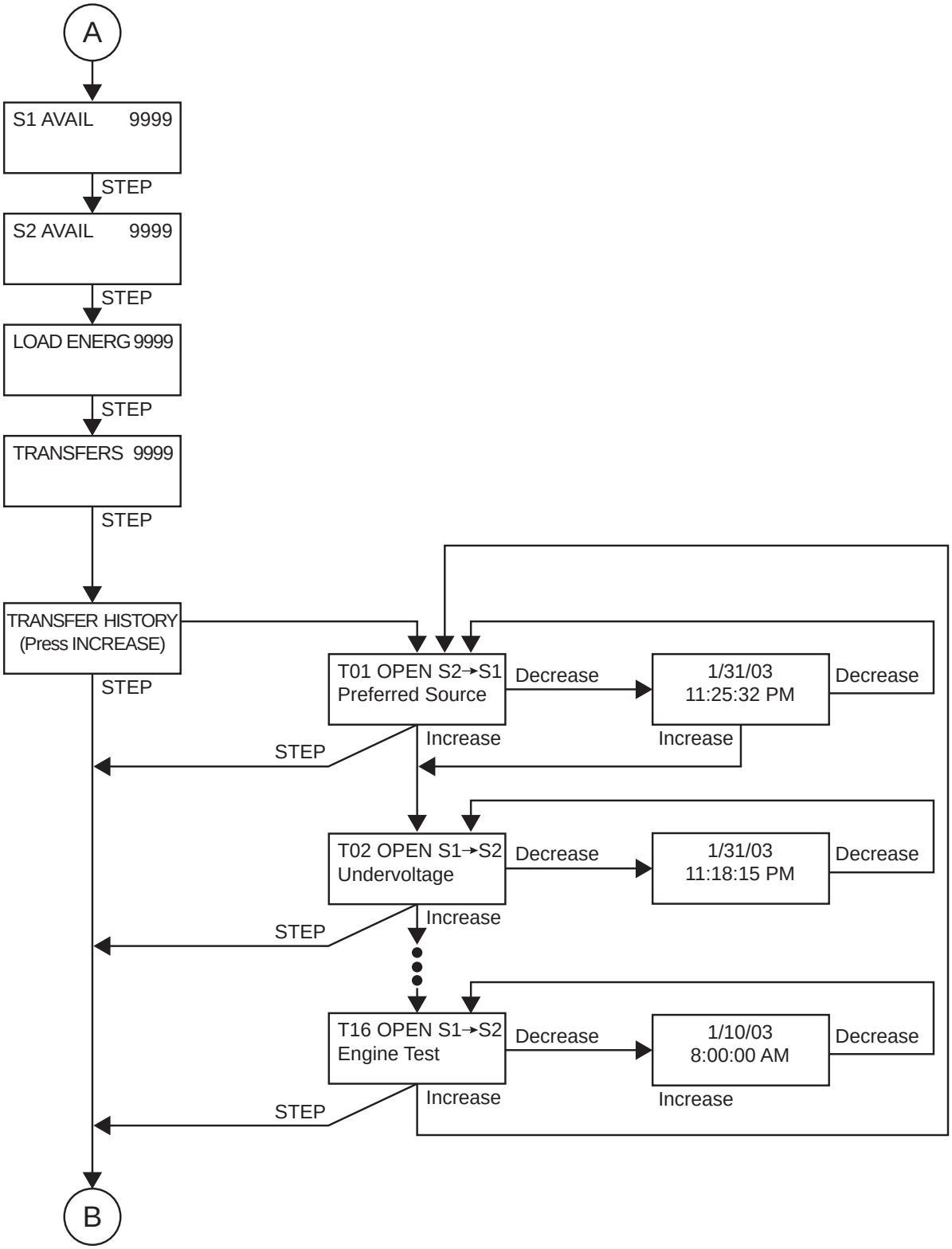

Katolight Service - Master Repair Manual - Page 4030

Menu B

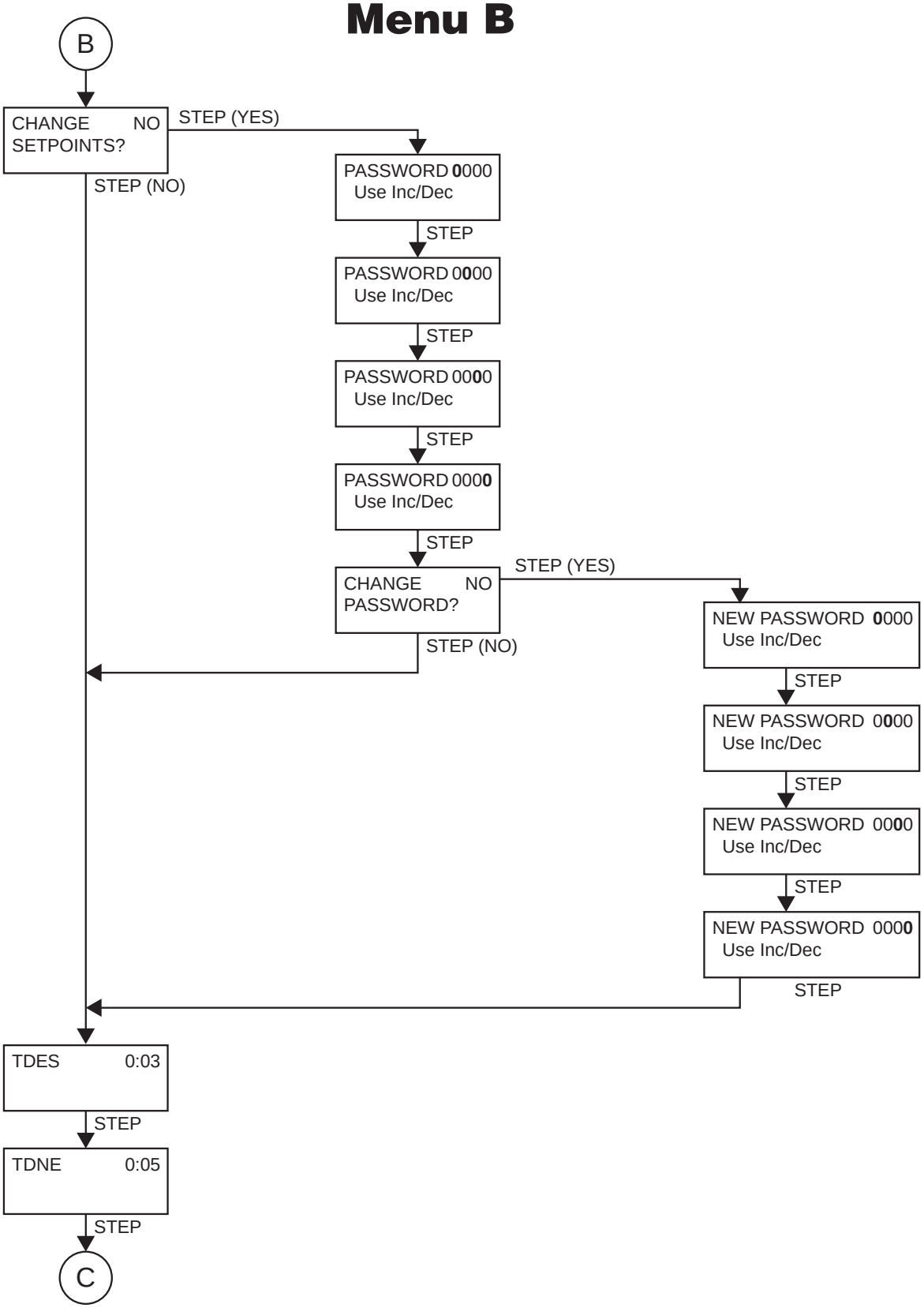

Katolight Service - Master Repair Manual - Page 4031

Menu C

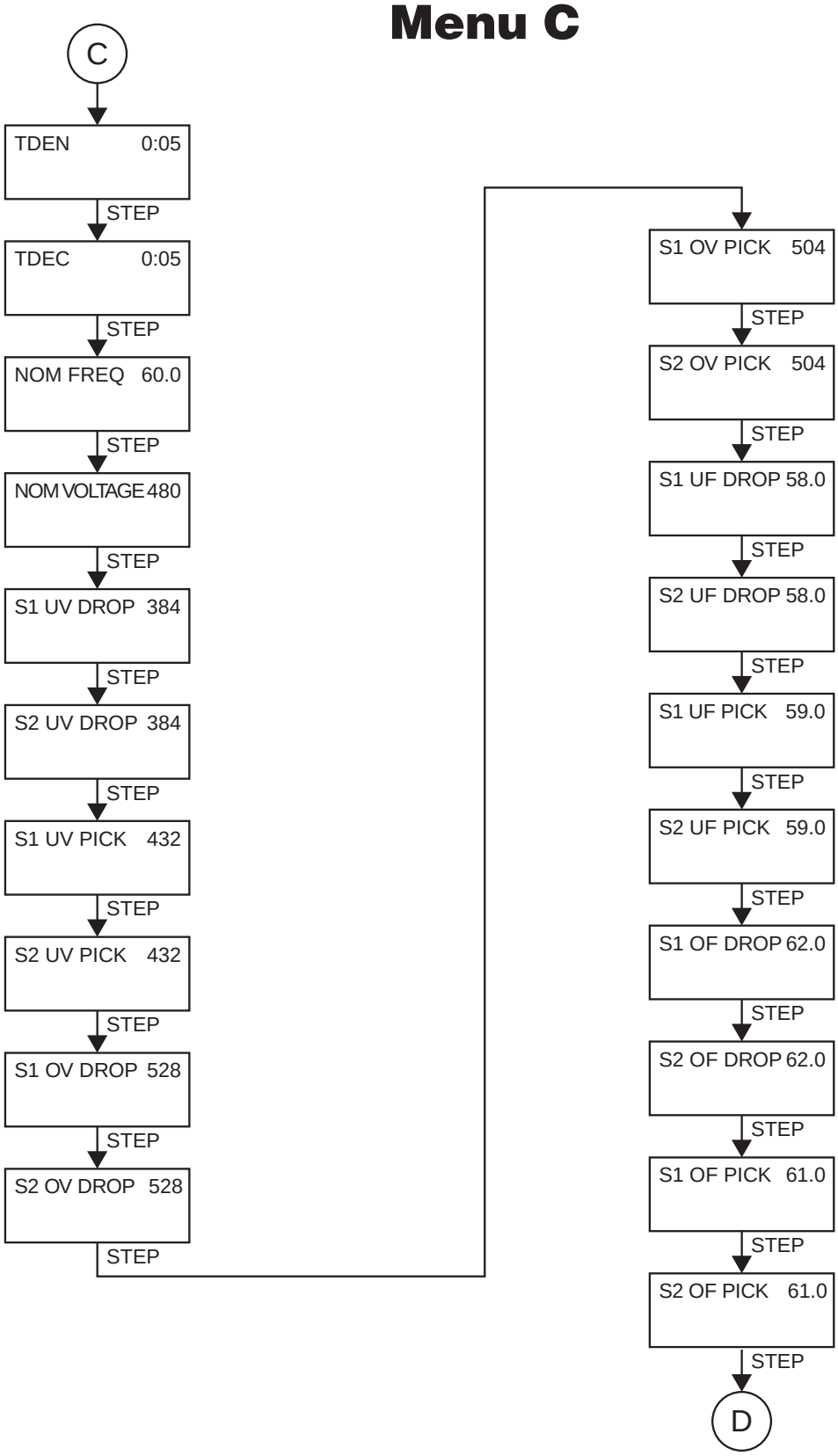

Katolight Service - Master Repair Manual - Page 4032

Menu D

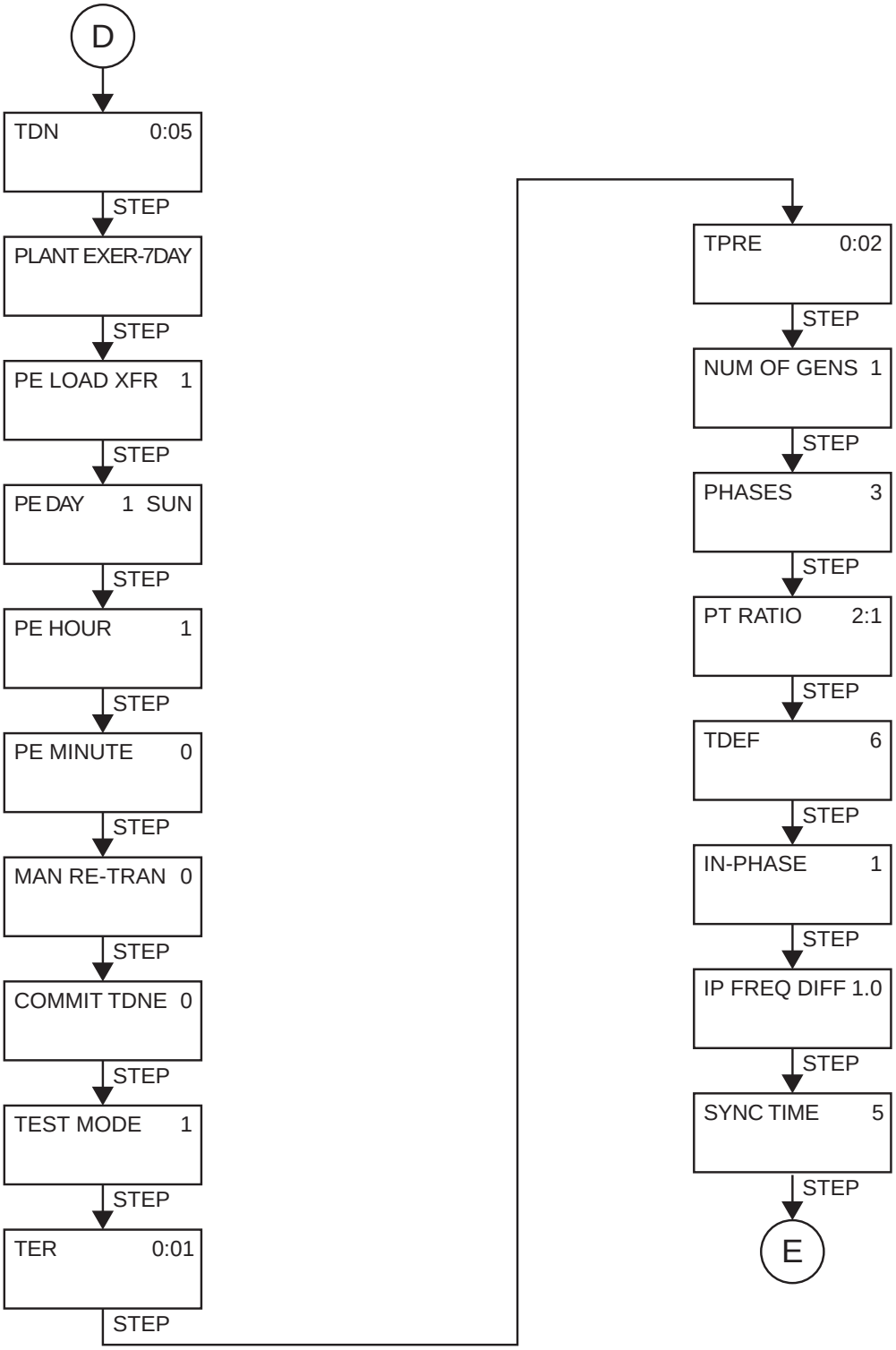

Katolight Service - Master Repair Manual - Page 4033

Menu E

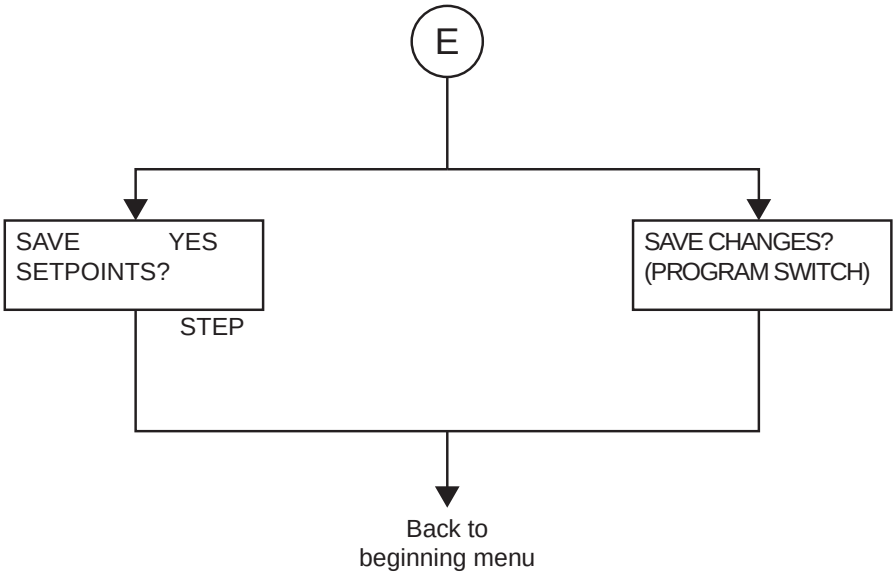

Katolight Service - Master Repair Manual - Page 4034

Instruction Book
Effective: June 2003

Installation, Operation and Maintenance of the ATC-400

Eaton Corporation
Cutler-Hammer business unit
1000 Cherrington Parkway
Moon Township, PA 15108-4312
USA
tel: 1-800-525-2000
www.cutler-hammer.eaton.com

Cutler-Hammer

© 2003 Eaton Corporation
All Rights Reserved
Printed in USA
Publication No. IB01602001E Rev. 3 (ISI)
June 2003

Instructions for Cutler-Hammer Transfer Switch Equipment (30 - 1000 Amperes)



Effective July 2001 Supersedes ATS-VOO3 dated June 1998

WARNING

READ AND UNDERSTAND THE INSTRUCTIONS CONTAINED HEREINAFTER BEFORE ATTEMPTING TO UNPACK, ASSEMBLE, OPERATE OR MAINTAIN THIS EQUIPMENT.

HAZARDOUS VOLTAGES ARE PRESENT INSIDE TRANSFER SWITCH ENCLOSURES THAT CAN CAUSE DEATH OR SEVERE PERSONAL INJURY. FOLLOW PROPER INSTALLATION, OPERATION AND MAINTENANCE PROCEDURES TO AVOID THESE VOLTAGES.

TRANSFER SWITCH EQUIPMENT COVERED BY THIS INSTRUCTION BOOK IS DESIGNED AND TESTED TO OPERATE WITHIN ITS NAMEPLATE RATINGS. OPERATION OUTSIDE OF THESE RATINGS MAY CAUSE THE EQUIPMENT TO FAIL RESULTING IN DEATH, SERIOUS BODILY INJURY AND/OR PROPERTY DAMAGE. ALL RESPONSIBLE PERSONNEL SHOULD LOCATE THE DOOR MOUNTED EQUIPMENT NAMEPLATE AND BE FAMILIAR WITH THE INFORMATION PROVIDED ON THE NAMEPLATE. A TYPICAL EQUIPMENT NAMEPLATE IS SHOWN IN FIGURE 1.

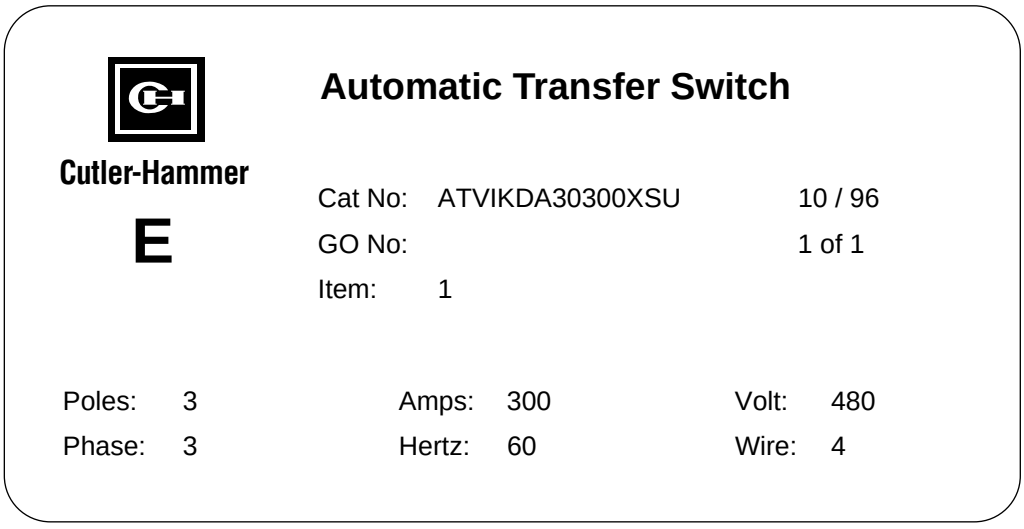

Figure 1 *Typical Automatic Transfer Switch Equipment Nameplate*

All possible contingencies which may arise during installation, operation or maintenance, and all details and variations of this equipment do no purport to be covered by these instructions. If further information is desired by purchaser regarding his particular installation, operation or maintenance of particular equipment, contact a Cutler-Hammer representative.

TABLE OF CONTENTS

Page

SECTION 1: INTRODUCTION

1.1 Preliminary Comments and Safety Precautions....1
1.1.1 Warranty and Liability Information....1
1.1.2 Safety Precautions....1
1.2 General Information....1
1.2.1 Transfer Switch Types....2
1.2.2 Design Configuration....2
1.3 Transfer Switch Catalog Number Identification....3
1.4 Environmental Conditions....5

SECTION 2: RECEIVING, HANDLING AND STORAGE

2.1 Receiving....6
2.2 Handling....6
2.3 Storage....6

SECTION 3: EQUIPMENT DESCRIPTION

3.1 General....7
3.2 Power Panel....7
3.2.1 Vertical Design Steel Base Plate....8
3.2.2 Main Contacts....8
3.2.3 Vertical Design Transfer Mechanism....8
3.2.4 Horizontal Design Transfer Mechanism....8
3.3 Voltage Selection Panel....9
3.4 Logic Panel....9
3.5 Options (Non-Logic Panel)....9
3.6 Enclosure....11
3.7 Standards....12

SECTION 4: INSTALLATION AND WIRING

4.1 General....13
4.2 Mounting Location....13
4.3 Mounting Procedure....13
4.4 Vertical Design Load Lug Location....15
4.5 Power Cable Connections....19
4.6 Wiring....20
4.7 Voltage Selection Adjustments....20
4.8 Terminal Block Wire Installation and Removal....21

SECTION 5: OPERATION

5.1 General....24
5.2 Vertical Design Operation....24
5.3 Horizontal Design Operation....25
5.4 Non-Automatic Operation (Manually Operated)....26
5.5 Non-Automatic Operation (Electrically Operated)....26
5.6 Automatic Transfer Switch....26

Page

SECTION 6: TESTING AND PROBLEM SOLVING

6.1 Testing 28
6.2 Problem Solving 28
6.2.1 Transfer Switch Appears Inoperative 28

SECTION 7: MAINTENANCE

7.1 Introduction....30
7.2 Procedures 30

LIST OF FIGURES

Figure	Title	Page
1	Typical Automatic Transfer Switch Equipment Nameplate	iii
1-1	Typical Load Transfer Switch (circuit breaker type) Schematic	2
1-2	Vertical Design Automatic Transfer Switch Equipment with Deadfront Cover in Place Over Power Panel (225-1000 Amperes)	3
1-3	Vertical Design Automatic Transfer Switch Equipment Shown with Deadfront Cover Removed (225-1000 Amperes)	3
1-4	Horizontal Design Automatic Transfer Switch Equipment (30-100 Amperes)	5
3-1	Typical Vertical Design Power Panel (Unmounted)	7
3-2	Typical Horizontal Design Power Panel (Mounted)	7
3-3	Molded Case Switches Mounted in Vertical Design (Transfer Mechanism Removed for Clarity)	8
3-4	Vertical Design Voltage Selection Panel with Voltage Being Selected	9
3-5	Typical Solid State Logic Panel (Door Mounted)	9
3-6	Charger Mounting Dimensions in inches (mm)	10
3-7	Typical Type 1 Enclosure (Door Closed)	11
4-1	Enclosed Automatic Transfer Switch Dimensions and Approximate Weights	14
4-2	Vertical Design Power Panel Mounting Reference in Inches (mm)	15
4-3	Vertical Design Load Lug Assembly Shown Mounted	16
4-4	Typical (225-1000 Amperes) Vertical Design Transfer Switch Equipment (Door Open and Deadfront Shield Removed)	17
4-5	Typical (30-100 Amperes) Horizontal Design Transfer Switch Equipment (Door Open)	18
4-6	Line Voltage Plug and Receptacles (shown with covers removed) for Horizontal Design	20
5-1	Transfer Switch Manual Operating Handle in Use on Vertical Design	24
5-2	Indicator Wheel Shown Mounted in Mechanism with Motor Mounted Under Wheel	24
5-3	Indicator Wheel Indicating Neutral Position on Vertical Design	25
5-4	Motor Disconnect Being Unplugged	25
5-5	Electrical Operation Pushbutton and Position Indicating Lights Shown Mounted	26

LIST OF TABLES

Table	Title	Page
1.1	Transfer Switch Catalog Number Explanation	4
3.1	Transfer Switch Equipment Enclosures	12
4.1	Bolted Bus Connection Torque Requirements	17
4.2	Transfer Switch Equipment Wire Sizes	19
7.1	Periodic Maintenance Procedures	31

SECTION 1: INTRODUCTION

1.1 PRELIMINARY COMMENTS AND SAFETY PRECAUTIONS

This technical document is intended to cover most aspects associated with the installation, application, operation and maintenance of transfer switch equipment with ratings from 30 through 1000 amperes, except for the specific logic used to control the equipment. It is provided as a guide for authorized and qualified personnel only. Please refer to the specific WARNING and CAUTION in Section 1.1.2 before proceeding. If further information is required by the purchaser regarding a particular installation, application or maintenance activity, a Cutler-Hammer representative should be contacted. For information associated with the control, refer to the separate instruction book pertaining to the logic package installed in the switch.

1.1.1 WARRANTY AND LIABILITY INFORMATION

No warranties, expressed or implied, including warranties of fitness for a particular purpose of merchantability, or warranties arising from course of dealing or usage of trade, are made regarding the information, recommendations and descriptions contained herein. In no event will Cutler-Hammer be responsible to the purchaser or user in contract, in tort (including negligence), strict liability or otherwise for any special, indirect, incidental or consequential damage or loss whatsoever, including but not limited to damage or loss of use of equipment, plant or power system, cost of capital, loss of power, additional expenses in the use of existing power facilities, or claims against the purchaser or user by its customers resulting from the use of the information and descriptions contained herein.

1.1.2 SAFETY PRECAUTIONS

All safety codes, safety standards and/or regulations must be strictly observed in the installation, operation and maintenance of this device.

WARNING

THE WARNINGS AND CAUTIONS INCLUDED AS PART OF THE PROCEDURAL STEPS IN THIS DOCUMENT ARE FOR PERSONNEL SAFETY AND PROTECTION OF EQUIPMENT FROM DAMAGE. AN EXAMPLE OF A TYPICAL WARNING LABEL HEADING IS SHOWN ABOVE TO FAMILIARIZE PERSONNEL WITH THE STYLE OF PRESENTATION. THIS WILL HELP TO INSURE THAT PERSONNEL ARE ALERT TO WARNINGS, WHICH APPEAR THROUGHOUT THE DOCUMENT. IN ADDITION, CAUTIONS ARE ALL UPPER CASE AND BOLDFACE.

CAUTION

COMPLETELY READ AND UNDERSTAND THE MATERIAL PRESENTED IN THIS DOCUMENT BEFORE ATTEMPTING INSTALLATION, OPERATION OR APPLICATION OF THE EQUIPMENT. IN ADDITION, ONLY QUALIFIED PERSONS SHOULD BE PERMITTED TO PERFORM ANY WORK ASSOCIATED WITH THE EQUIPMENT. ANY WIRING INSTRUCTIONS PRESENTED IN THIS DOCUMENT MUST BE FOLLOWED PRECISELY. FAILURE TO DO SO COULD CAUSE PERMANENT EQUIPMENT DAMAGE.

1.2 GENERAL INFORMATION

Transfer switches are used to protect critical electrical loads against loss of power. The load's normal power source is backed up by a secondary (emergency) power source. A transfer switch is connected to both the normal and emergency power sources and supplies the load with power from one of these two sources. In the event that power is lost from the normal power source, the transfer switch transfers the load to the secondary (emergency) power source. Transfer can be automatic or manual, depending upon the type of transfer switch equipment being used. Once normal power is restored, the load is automatically or manually transferred back to the normal power source, again depending upon the type of transfer equipment being used (Figure **1-1**).

In automatic transfer switch equipment, the switch's intelligence system initiates the transfer when normal power fails or falls below a preset voltage. If the emergency power source is a standby generator, the transfer switch initiates generator starting and transfers to the emergency power source when sufficient generator voltage is available. When normal power is restored, the transfer switch automatically transfers back and initiates engine shutdown. In the event the normal power source fails and the emergency power source does not appear, the automatic transfer switch remains connected to the normal power source until the emergency power source does appear. Conversely, if connected to the emergency power source and the emergency power source fails while the normal power source is still unavailable, the automatic transfer switch remains connected to the emergency power source.

1.2.1 TRANSFER SWITCH TYPES

Four types of basic transfer switch equipment are available:

Automatic Transfer Switch

Automatic transfer switches automatically perform the transfer function. They consist of three basic elements:

(1) Main contacts to connect and disconnect the load to and from the source of power.

(2) Intelligence/supervisory circuits to constantly monitor the condition of the power sources and thus provide the intelligence necessary for the switch and related circuit operation.

(3) A transfer mechanism to effect the transfer of the main contacts from source to source.

Basic Transfer Switch

The basic transfer switch is designed for use with customer furnished controls. It is similar in design to the automatic version except the intelligence circuit (logic panel) and voltage selection panel are omitted. All automatic sensing devices, relays or solid state devices are the customer's responsibility.

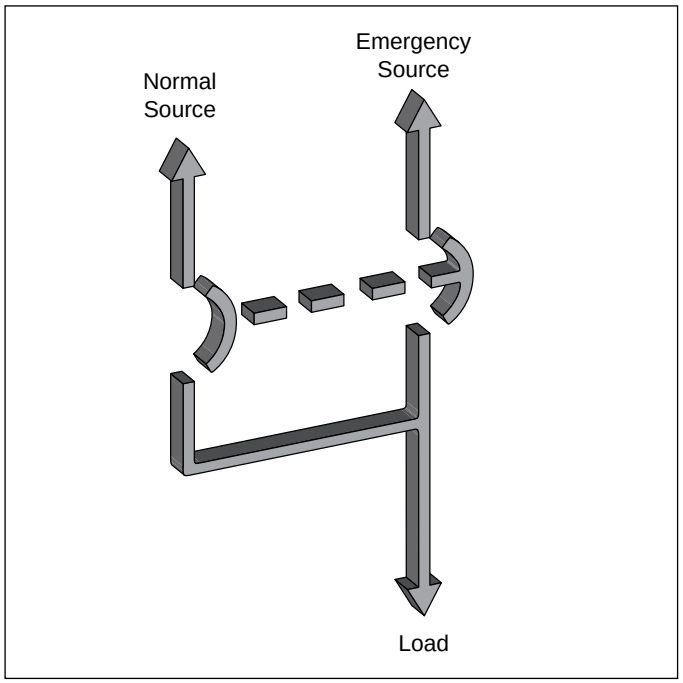

Figure 1-1 Typical Load Transfer Switch (circuit breaker type) Schematic

Non-Automatic Transfer Switch (Manually Operated)

Non-Automatic transfer switches provide the main contacts and the transfer mechanism to effect the transfer of the main contacts from source to source. Transfer of power, however, is accomplished by true hand operation (not power assisted) of the transfer switch. This switch is similar to the basic switch in that an intelligence circuit and a motor driven mechanism are not part of the design.

Non-Automatic Transfer Switch (Electrically Operated)

This transfer switch is similar to the Non-Automatic Transfer Switch (Manually Operated) just described except that an electrical operation feature is added. The switch electrically transfers power when an appropriate pushbutton on the front of the enclosure is pushed. If necessary, the switch can also be operated manually.

1.2.2 DESIGN CONFIGURATION

The Cutler-Hammer transfer switch is a rugged, compact design utilizing molded case switches to effect the transfer of essential loads from one power source to another (Figures **1-2**, **1-3** and **1-4**). Molded case switches are interlocked to prevent both switches from being closed at the same time. The versatile design, in addition to standard transfer functions, offers an optional integral thermal and short circuit protection in either or both switching devices.

Molded case switches and the associated transfer mechanism are usually mounted vertically in the assembly. The vertical configuration (225-1000 amperes) is accomplished by utilizing a positive, metallic transfer and interlocking system between the molded case switches. A horizontally mounted transfer mechanism is utilized with transfer switches 30 to 150 amperes.

The Cutler-Hammer automatic transfer switch was designed with installation ease and simplified maintenance in mind. Three main panels comprise the automatic transfer switch design:

- Power Panel
- Voltage Selection Panel
- Logic Panel

Each panel is independently mounted with interconnecting wiring terminated in connector plugs to permit individual door or panel removal without disturbing critical connections. Enclosure mounting is simplified by utilizing top and bottom mounting flanges with elongated mounting holes.

For the vertical design, installed power panel positioning bolts, elongated mounting holes and pre-tapped inserts insure proper power panel mounting after initial enclosure installation or when switching from top to bottom entry and vice versa. Refer to Section 4 for mounting and modification details.

1.3 TRANSFER SWITCH CATALOG NUMBER IDENTIFICATION

Transfer switch equipment catalog numbers provide a significant amount of relevant information that pertains to a particular piece of equipment. The Catalog Number Identification Table (Table **1.1**) provides the required interpretation information. An example is offered to initially simplify the process.

Example: Catalog Number *(circled numbers correspond to position headings in Table **1.1**)* –

① to ②	③	④	⑤ to ⑥	⑦	⑧	⑨ to ⑫	⑬	⑭	⑮
AT	**V**	**I**	**KD**	**A**	**3**	**0225**	**B**	**S**	**U**

The catalog number ATVSKDA30225BSU describes an Automatic Transfer Switch with the switching devices mounted vertically in the enclosure. The intelligence represented by the control panel is IQ Transfer logic. The Cutler-Hammer Series C Type HKD is used as the switching device and is in the form of a 3-pole molded case switch on each source. The continuous current rating of this equipment is 225 amperes and applicable at 208 VAC, 60Hz. The transfer switch equipment is enclosed in a NEMA 1 enclosure and is both UL and UL-C listed.



Figure 1-2 Vertical Design Automatic Transfer Switch Equipment with Deadfront Cover in Place Over Power Panel (225-1000 Amperes)

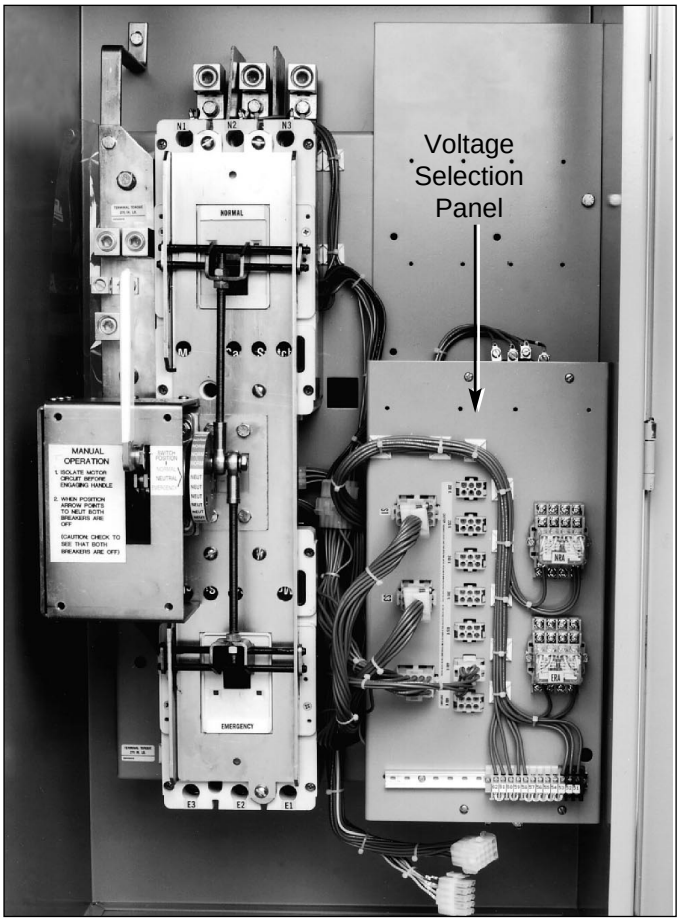

Figure 1-3 Vertical Design Automatic Transfer Switch Equipment Shown with Deadfront Cover Removed (225-1000 Amperes)

Table 1.1 *Transfer Switch Catalog Number Explanation*④

Positions 1-2	Position 3	Position 4	Positions 5-6
Basic Device	**Switching Device Orientation**	**Control Panel**	**Switching Device**
Automatic Transfer Switch **AT**	Vertical **V**①	IQ Transfer **I**	HFD Cutler-Hammer Series C **FD**
	Horizontal **H**②	Microprocessor **M**	HKD Cutler-Hammer Series C **KD**
Non-Automatic Transfer Switch (Electrically Operated) **NT**		Solid State Logic **S**	HLD Cutler-Hammer Series C **LD**
		Not Applicable **X**	MA Cutler-Hammer **MA**
			HMDL Cutler-Hammer **MD**
Non-Automatic Transfer Switch (Manually Operated) **MT**			NB Cutler-Hammer **NB**
			HND Cutler-Hammer Series C **ND**③
Basic Transfer Switch (Power Panel Only) **PP**			

Position 7	Position 8	Positions 9-12	Position 13	Position 14	Position 15
Switching Device Arrangement	**Number of Poles**	**Ampere Rating**	**Voltage/ Frequency**	**Enclosure**	**Listing**
Fixed Mount Molded Case Switches Both Power Sources **A**	Two **2**	30A – **0030**	120VAC/60Hz **A**	No Enclosure **K**	UL Listed **U**
		70A – **0070**	208VAC/60Hz **B**	Type 1 **S**	
	Three **3**	100A – **0100**	600VAC/60Hz **E**	Type 12 **J**	UL Recognized **R**
Fixed Mount Molded Case Breakers Both Power Sources **B**		150A – **0150**	220VAC/50 or 60Hz **G**	Type 3R **R**	Component
	Four **4**	225A – **0225**	380VAC/50Hz **H**	Type 4③ **L**	
		300A – **0300**	600VAC/50Hz **K**	Type 4X③ **D**	UL Listed and **C**
Fixed Mount Molded Case Breaker Normal Power Source, Molded Case Switch Emergency Power Source **C**		400A – **0400**	230VAC/50Hz **M**		Meets Canadian Electrical Code
		600A – **0600**	401VAC/50Hz **N**		
		800A – **0800**	415VAC/50Hz **O**		
		1000A – **1000**	240VAC/60Hz **W**		No Listing **X**
			480VAC/60Hz **X**		
Fixed Mount Molded Case Switch Normal Power Source, Molded Case Breaker Emergency Power Source **D**			365VAC/50Hz **Z**		

① Vertical orientation (225-1000 amperes)
② Horizontal orientation (30-150 amperes)
③ Contact factory for availability
④ Not all combinations are possible

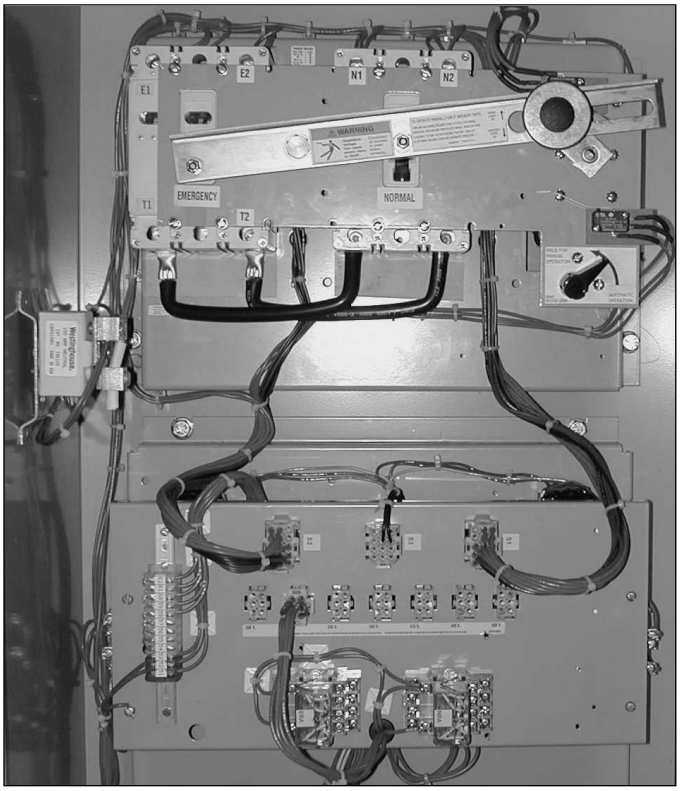

Figure 1-4 Horizontal Design Automatic Transfer Switch Equipment (30-100 Amperes)

1.4 ENVIRONMENTAL CONDITIONS

Seismic
With proper installation and by including the appropriate option which includes specially designed cleats, transfer switches have a seismic capability which exceeds the worst case Zone 4 required levels per both the Uniform Building Code and the California Building Code.

Operational Conditions
Normally, a transfer switch is applied indoors in an electrical equipment room. In the appropriate enclosure, it can be used for outdoor applications were the equipment is subject to falling rain, freezing temperatures and 90% humidity (non condensing). The ambient temperature range for operation is between -20 and +70°C.

SECTION 2: RECEIVING, HANDLING AND STORAGE

2.1 RECEIVING

Every effort is made to insure that transfer switch equipment arrives at its destination undamaged and ready for installation. Crating and packing is designed to protect internal components as well as the enclosure. Transfer switch enclosures are skid mounted and suited for fork lift movement. Care should be exercised, however, to protect the equipment from impact at all times. Do not remove protective packaging until the equipment is ready for installation.

When transfer switch equipment reaches its destination, the customer should inspect the shipping container for any obvious signs of rough handling and/or external damage incurred during the transportation phase. Record any external and internal damage observed for reporting to the transportation carrier and Cutler-Hammer, once a thorough inspection is completed. All claims should be as specific as possible and include shop order and general order numbers.

CAUTION

MAKE NOTE OF THE WARNING LABEL ATTACHED TO THE TOP OF THE SHIPPING CONTAINER THAT WARNS AGAINST DOUBLE STACKING TRANSFER SWITCH EQUIPMENT.

A shipping label is affixed to the top of the shipping container which includes a variety of equipment and customer information, such as General Order Number (GO#) and Catalog Number (Cat#). Make certain that this information matches other shipping paper information.

Each transfer switch enclosure is bolted through its top and bottom mounting flanges to a rigid wooden pallet. The pallet is open at two ends for movement by a fork lift. Heavy duty cardboard sides surround the enclosure and are further supported with reinforced cardboard corner posts. An egg crate design cardboard protector covers the entire top of the enclosure with additional cardboard protectors over the indicating light panel and operating handle. A heavy duty cardboard lid covers the entire opening. The shipment is secured and further protected with shrink wrap. Do not discard the packing material until the equipment is ready for installation.

Once the top packaging is removed from the shipment, the enclosure door can be opened. A plastic bag of documents will be found within the enclosure, usually attached to the inside of the door. Important documents, such as test reports, wiring diagrams, appropriate instruction leaflets and a warranty registration card, are enclosed within the bag and should be filed in a safe place.

2.2 HANDLING

As previously mentioned, transfer switch equipment is packaged for fork lift movement. Protect the equipment from impact at all times and do not double stack. Once the equipment is in the installation location and ready to be installed, packaging material can be removed. Once the enclosure is unbolted from the wooden pallet, it can be hand moved to its installation position. Be careful not to damage the top or bottom enclosure mounting flanges. Refer to Section 4 of this manual for specific installation instructions.

2.3 STORAGE

Although well packaged, this equipment is not suitable for storage outdoors. The equipment warranty will not be applicable if there is evidence of outdoor storage. If the equipment is to be stored indoors for any period of time, it should be stored with its protective packaging material in place. Protect the equipment at all times from excessive moisture, construction dirt, corrosive conditions and other contaminants. It is strongly suggested that the package protected equipment be stored in a climate controlled environment of -20° to 85° with a relative humidity of 80% or less. Do not, under any circumstances, stack other equipment on top of a transfer switch equipment enclosure, whether packaged or not.

SECTION 3: EQUIPMENT DESCRIPTION

3.1 GENERAL

Cutler-Hammer transfer switch equipment is available in four different configurations:

- Automatic Transfer Switch
- Basic Transfer Switch
- Non-Automatic Transfer Switch (Manually Operated)
- Non-Automatic Transfer Switch (Electrically Operated)

Refer to Section 1 for a discussion of the four types. Each transfer switch is usually supplied in an enclosure, although unmounted sub-assemblies can be supplied for mounting by the customer. Since the enclosed automatic transfer switch encompasses all transfer switch equipment possibilities, it is the only specific type that will be discussed in this section.

The enclosed automatic transfer switch consists of three basic panels interconnected through connector plugs and mounted in an enclosure (Figures **1-3, 1-4, 4-4** and **4-5**):

- Power Panel
- Voltage Selection Panel
- Logic Panel
  - IQ Transfer
  - Solid State
  - Micro-processor based

The components comprising the three panels are installed in accordance with the specific requirements of the circuit being controlled. Each transfer switch is, therefore, tailor-made to a specific application.

3.2 POWER PANEL

The power panel consists of a means for making load, power and neutral connections, the main contacts and the transfer mechanism all on one steel base plate (Figures **3-1** and **3-2**).

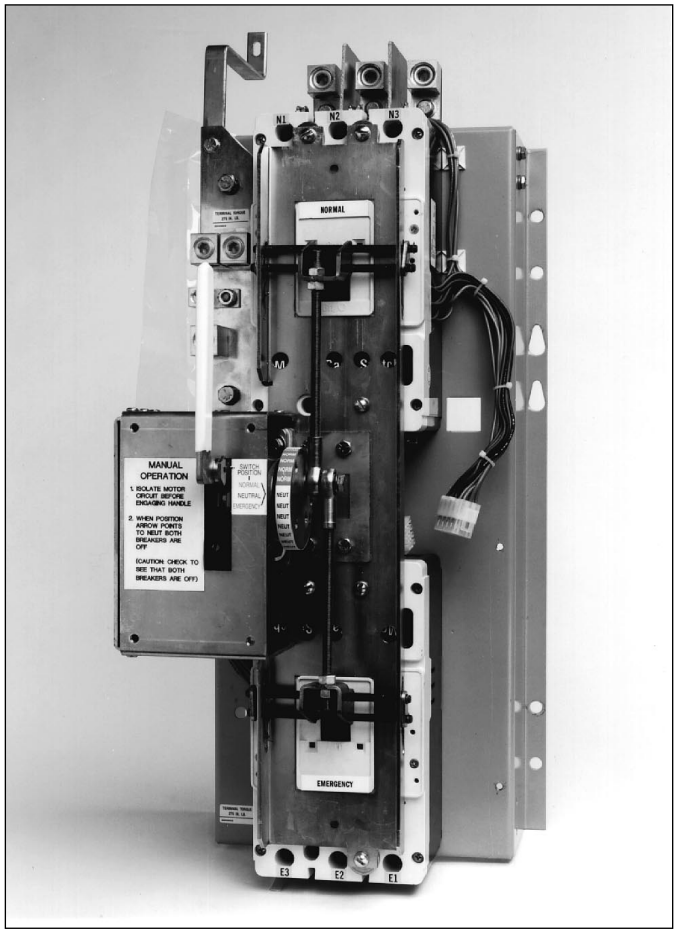

Figure 3-1 Typical Vertical Design Power Panel (Unmounted)

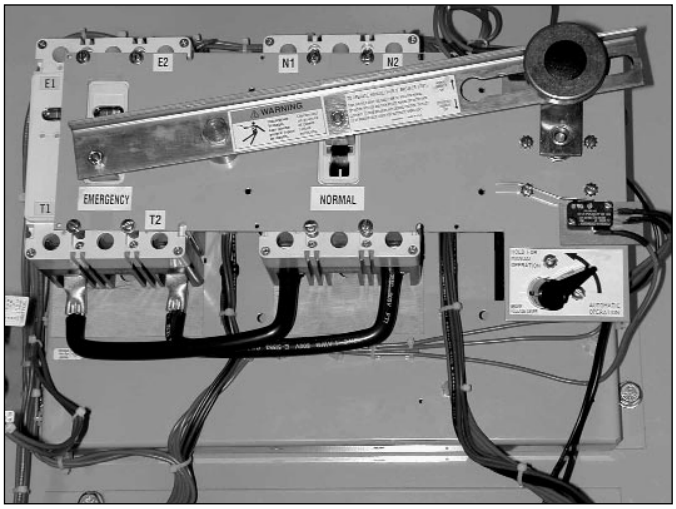

Figure 3-2 Typical Horizontal Design Power Panel (Mounted)

3.2.1 VERTICAL DESIGN STEEL BASE PLATE

The steel base plate on the vertical design permits the power panel to be moved vertically within the enclosure to accommodate top or bottom cable entry (Figure **4-2**). Elongated holes on either side of the base plate insure proper positioning. The bottom set of elongated holes position the power panel higher in the enclosure, thus permitting bottom cable entry. The top set of elongated holes position the power panel lower in the enclosure for top cable entry. Section 4 discusses equipment mounting and load lug location in detail.

3.2.2 MAIN CONTACTS

The main contacts connect and disconnect the load to and from the different power sources. High withstand molded case switches are the main contacts for the Normal and Emergency power sources in standard, unmodified automatic transfer switches. Optional integral thermal and short circuit protection in either or both switching devices is, however, available (Figure **3-3** and Section **3.5**). These continuous duty switches are rated for all classes of loads, open or enclosed. In addition, they have high dielectric strength, heavy-duty switching and withstand capabilities, and high interrupting capacity. The switches incorporate positive, quick-make, quick-break toggle mechanisms and De-ion arc chutes.

Vertically mounted switching devices are mechanically and electrically interlocked to prevent the two sets of main contacts from being closed simultaneously. The load side contacts of each switching device are joined with a bus bar assembly to form a common load terminal location, either top or bottom (Figure **4-3**).

Horizontally mounted switching devices are also mechanically and electrically interlocked. The molded case switches are kept trip-free in the closed position. This permits thermal and short circuit protection to be incorporated in either or both interrupters.

3.2.3 VERTICAL DESIGN TRANSFER MECHANISM

The transfer mechanism transfers between power sources through a motor driven ratchet type operation. A rotational motion is created on an indicator wheel by the ratchet's operation. The indicator wheel is attached to rigid shafts which covert the rotary motion into vertical linear motion. Opening and closing of the switching devices is accomplished as a result of this vertical linear motion. The transfer mechanism is mounted in front of the molded case switches (Figure **3-1**).

A solid steel shield attached to the ratchet assembly permits viewing of the rotary switch position indicator while restricting access to other parts of the power panel (Figure **1-2**).

3.2.4 HORIZONTAL DESIGN TRANSFER MECHANISM

The horizontal design mechanism consists of a pivoting rocker-arm lever which operates the switch handles as the arm is moved by a rotating lever connected to the transfer motor. A slide pin engaging a pivot in the rotating lever converts rotary motion to linear motion. Motor limit switches are mounted externally to the molded case switches and operated by the rotating lever. Each limit switch is synchronized with its associated molded case switch to operate when its switch closes (Figure **3-2**).

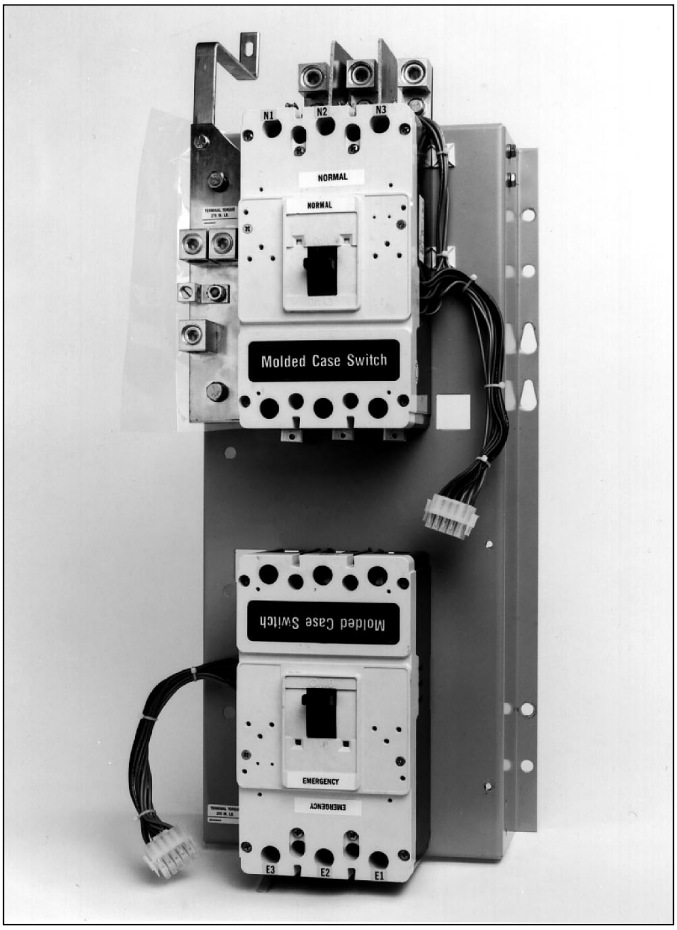

Figure 3-3 Molded Case Switches Mounted in Vertical Design (Transfer Mechanism Removed for Clarity)

3.3 VOLTAGE SELECTION PANEL

The voltage selection panel is a multi-tap enclosed transformer mounted in the enclosure (Figure **3-4**). Seven front accessible voltages taps from 208 to 600 volts AC satisfy any required application voltage. A quick change capability from one voltage to another is provided by a small disconnect plug.

3.4 LOGIC PANEL

The logic panel provides the intelligence and supervisory circuits which constantly monitor the condition of both normal and emergency power sources thus providing the required intelligence for transfer operations (Figure **3-5**). Three different possibilities are available with detailed information presented in separate documents:

- IQ Transfer Instruction Book
- Solid State Instruction Leaflet
- Micro-processor Based Instruction Leaflet

3.5 OPTIONS (NON-LOGIC PANEL)

Switch options, which are not part of the logic scheme, are available to meet a variety of other application requirements. Options are numbered with an associated description. More detailed selections that must be made within a specific option are lettered. For available options associated with the logic scheme, refer to the specific logic document associated with the type of logic selected.

NOTICE

*Options are Underwriters Laboratories, Inc. listed, except as noted, when supplied on UL Listed Switches. If an option is selected that is **Not UL Listed**, the switch **Will Not Have A UL Label**.*

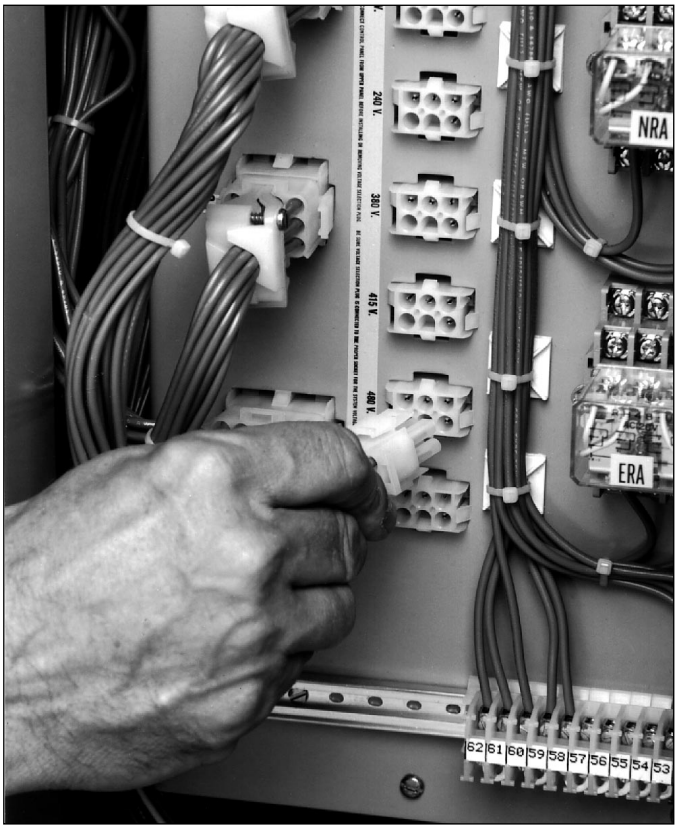

Figure 3-4 Vertical Design Voltage Selection Panel with Voltage Being Selected



Figure 3-5 Typical Solid State Logic Panel (Door Mounted)

Katolight Service - Master Repair Manual - Page 4051

NOTICE

Not all options are available for all transfer switch configurations. If in doubt, check Price List 29-920 for the availability of options for a specific transfer switch design. The option numbers used here correspond to the numbers used in the price list.

14. Relay Auxiliary Contact

The Normal power source relay is energized only when the switch is in the Normal position and Normal power is present. The Emergency power source relay is energized whenever the Emergency power source is present.

C. Normal Power Source: Provides 2 NO and 2 NC contacts

D. Emergency Power Source: Provides 2 NO and 2 NC contacts

16. Power Switch with Integral Overcurrent Protection

Use of this option can, in many cases, eliminate the need for separate upstream overcurrent/short circuit protection, thus enabling code requirements to be met with a device that takes up less space and requires less wiring.

B. Both Normal and Emergency Sides

E. Emergency side only

N. Normal side only

18. IQ Metering

I. IQ Generator - Normal Only

J. IQ Generator - Emergency Only

K. IQ Generator - Both N&E (Selectable)

O. IQ Analyzer - Normal Only

P. IQ Analyzer - Emergency Only

Q. IQ Analyzer - Both N&E (Selectable)

R. DP-4000 - Normal Only

S. DP-4000 - Emergency Only

T. DP-4000 - Both N&E (Selectable)

20A. Rear Bus Connections

Front connected solderless lugs are furnished as standard on all enclosed and open units. Rear bus connections are only available on open units.

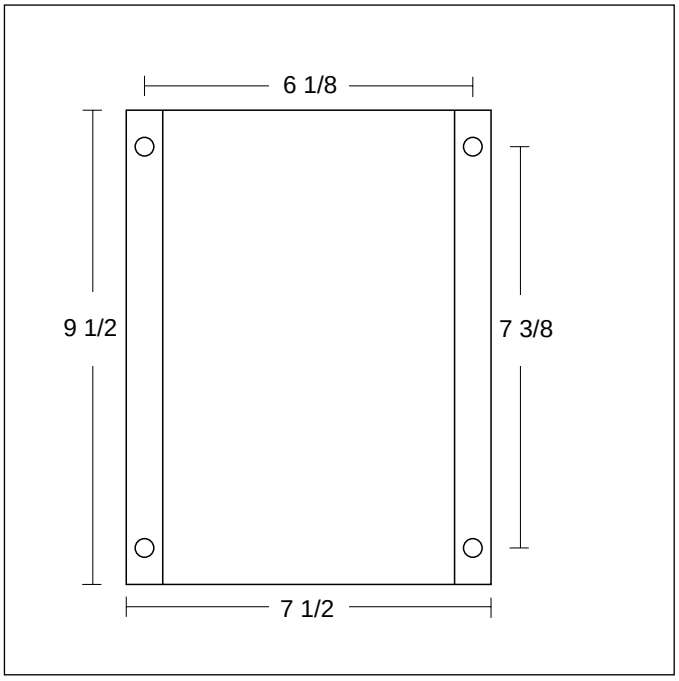

Figure 3-6 Charger Mounting Dimensions in inches (mm)

21A. Non-Standard Terminals

(Refer to Cutler-Hammer)

24. Battery Charger

The trickle charge DC output is 12 or 24 volts. Units are supplied in a separate wall mounted enclosure, and have an automatic high-low charge rate.

C. 12 volt

D. 24 volt

When supplied, the battery charger is provided in a separate wall mounted enclosure (Figure **3-6**). Separate instructions and wiring information are provided with the charger for installation purposes.

NOTICE

A separate 120 VAC control power supply is required for the battery charger input. No connections between the transfer switch and battery charger should be made.

33. Shunt Trip

The shunt trip is wired to terminal blocks for customer connection. (120V coil supplied as standard.)

A. Supplied in Normal Breaker
B. Supplied in Emergency Breaker

34. Extender Cable

An extender cable provides a means for extending the distance between the power switching panel and the logic panel. This allows for remote mounting of the logic panel.

A. 48 inch (1.2 m)
B. 72 inch (1.8 m)
C. 96 inch (2.4 m)
D. 120 inch (3.0 m)
E. 144 inch (3.7 m)

Special lengths are available. Contact Cutler-Hammer.

37. Service Entrance

A. Provides transfer switch as suitable for service equipment rating - A key operated selector switch permits external, power operated service disconnection with external pilot light for disconnect indication, also includes Option 16.
B. Same as A except includes ground fault protection.



Figure 3-7 Typical Type 1 Enclosure (Door Closed)

41. Space Heater with Thermostat

A. 100 Watts
B. 200 Watts
C. 400 Watts

42. Seismic Withstand Capability

Provides transfer switch with seismic capability exceeding the worst case Zone 4 required levels per both the **Uniform Building Code** and the **California Building Code**.

3.6 ENCLOSURE

The rugged steel switch enclosure is supplied with three door hinges, regardless of enclosure size, to insure proper support of the door and door mounted devices (Figures **3-6** and **4-1**). The hinges have removable hinge pins to facilitate door removal. Certain procedures, such as switch mounting, are simplified with the door removed. The doors are supplied as standard with a key lockable handle.

The door is used to mount a variety of lights, switches and pushbuttons, depending upon the options required for a particular switch. All switch doors are supplied with a heavy duty plastic accessory panel in place, whether or not external devices are required. When lights, pushbuttons or switches are required, they are normally mounted in the plastic door mounted panel.

The rear of the enclosure is supplied with elongated holes in the top and bottom mounting flanges to facilitate mounting. The vertical design is also supplied with two positioning bolts and various pre-tapped inserts to insure proper positioning of the power panel, anytime the power panel must be repositioned to accommodate a different

Table 3.1 Transfer Switch Equipment Enclosures

NEMA Type	Design	Protection
1	Indoor	Enclosed Equipment
3R	Outdoor	Rain, Ice Formation
12	Indoor	Dust, Dirt and Non-corrosive Liquids
4/4X	Indoor/Outdoor	Dust, Rain, Splashing Water, Corrosion Resistant

cable entry position. Cable entry holes are the responsibility of the customer.

Transfer switch enclosures and all internal steel mounting plates, such as the power panel mounting plate, go through a pre-treatment cleaning system prior to painting to insure a durable finish.

The standard switch enclosure is NEMA Type 1 for general indoor use. A variety of enclosures are, however, available to address almost any environmental circumstance (Table **3.1**).

3.7 STANDARDS

Cutler-Hammer transfer switch equipment enclosed in a NEMA 1 enclosure is listed for application by UL. In addition, Cutler-Hammer Automatic Transfer Switches are listed in File E38116 by Underwriters Laboratories, Inc. under Standard UL 1008. This standard covers requirements for automatic transfer switches intended for use in ordinary locations to provide for lighting and power as follows:

a. In emergency systems, in accordance with articles 517 and 700 in the National Electrical Code, ANSI/NFPA 70 and the National Fire Protection Association No. 76A and/or
b. In stand-by systems, in accordance with article 702 of the National Electrical Code and/or
c. In legally required stand-by systems in accordance with article 701 of the National Electrical Code.

Cutler-Hammer Automatic Transfer Switches are available to meet NFPA 110 for emergency and stand-by power systems, and NFPA99 for health care facilities when ordered with the appropriate options.

Since Cutler-Hammer Automatic Transfer Switches utilize specially designed molded case switches and/or molded case circuit breakers as the main power switching contacts, these devices must also be listed under the additional UL Standards 489 and 1087. Underwriters laboratories utilize two basic types of listing programs: a) Label service b) Re-examination. UL489 and UL1087 employ a label service listing program which requires an extensive follow-up testing program for listed devices. Standard UL1008 for automatic transfer switches lists devices under the re-examination program which only requires a continual physical re-examination of the components used in the product to insure consistency with the originally submitted device. Follow-up testing is not required by UL1008.

Representative production samples of molded case switches and molded case circuit breakers used in Cutler-Hammer Automatic Transfer Switches are subjected to a complete test program identical to the originally submitted devices on an ongoing periodic basis per UL489 and UL1087. The frequency of such a re-submittal can be as often as every quarter for a low ampere device.

SECTION 4: INSTALLATION AND WIRING

4.1 GENERAL

Transfer switches are factory wired and tested. Installation requires solidly mounting the enclosed unit and connecting power cables and auxiliary pilot circuits. Physical mounting procedures and power cable connections are covered in this section. All other required wiring or electrical connection references are covered in a separate **Customer Wiring Booklet** packed with the transfer switch. Locate the wiring booklet, review it, and keep it readily available for reference purposes during installation and testing. Once a transfer switch is properly installed and wired, it should be mechanically and electrically checked for proper installation and operation. The procedures for these initial mechanical and electrical checks are outlined in Section 6 of this instruction manual.

NOTICE

To facilitate the procedures described in this section for the vertical design, remove the solid steel shield over the power panel. The shield is attached to the ratchet assembly with four screws. Remove the four screws and shield until the procedures are completed.

WARNING

BE CERTAIN THAT THE SOLID STEEL POWER PANEL SHIELD USED WITH THE VERTICAL DESIGN IS PROPERLY INSTALLED BEFORE TRANSFER SWITCH EQUIPMENT IS PUT INTO SERVICE. THE SHIELD PROVIDES PROTECTION FROM DANGEROUS VOLTAGES AT THE LINE AND LOAD TERMINALS WHEN THE EQUIPMENT IS IN OPERATION. FAILURE TO DO SO COULD RESULT IN PERSONAL INJURY OR DEATH.

4.2 MOUNTING LOCATION

Choose a location that offers a flat, rigid mounting surface capable of supporting the weight of the enclosed transfer switch equipment (Figure **4-1**). Avoid locations that are moist, hot and/or dusty. Enclosure designs are, however, available for special environments. If there are any doubts as to location suitability, discuss it with your Cutler-Hammer representative.

Check to make certain that there are no pipes, wires or other mounting hazards in the immediate mounting area that could create a present or future problem.

Carefully remove all packing material from the transfer switch at the mounting location. Even though an equipment inspection was made when the equipment was received, make another careful inspection of the enclosure and the enclosed transfer switch as packing material is removed and the enclosure readied for mounting. Be especially alert for distorted metal, loose wires or damaged components.

4.3 MOUNTING PROCEDURE

CAUTION

SINCE THE ENCLOSED TRANSFER SWITCH MUST BE LIFTED INTO PLACE FOR MOUNTING, BE CERTAIN THAT ADEQUATE RESOURCES ARE AVAILABLE FOR LIFTING TO AVOID PERSONNEL INJURIES OR EQUIPMENT DAMAGE.

Refer to Figure **4-1** for enclosure mounting dimension references. All transfer switch equipment enclosures are of the same design. Only the overall physical dimensions change.The enclosure is provided with four elongated mounting holes, two in the top mounting flange and two in the bottom.

If the transfer switch equipment is of the vertical design, the power panel is provided with two sets of mounting holes. One set positions the panel for top entry of cables and one set for bottom entry (Figure **4-2**). This will be covered in more detail later in this section under “Load Lug Location.”

Transfer switch equipment is assembled and supplied as standard for top entry, although equally adaptable to bottom entry. Cable entry holes are not part of the enclosure when shipped from the factory and must be provided in the field, either before or after mounting the enclosure.

CAUTION

EXTREME CARE SHOULD BE TAKEN TO PROTECT THE TRANSFER SWITCH FROM DRILL CHIPS, FILINGS AND OTHER CONTAMINANTS WHEN MAKING THE CABLE ENTRY HOLES AND MOUNTING THE ENCLOSURE TO PREVENT COMPONENT DAMAGE OR A FUTURE MALFUNCTION.

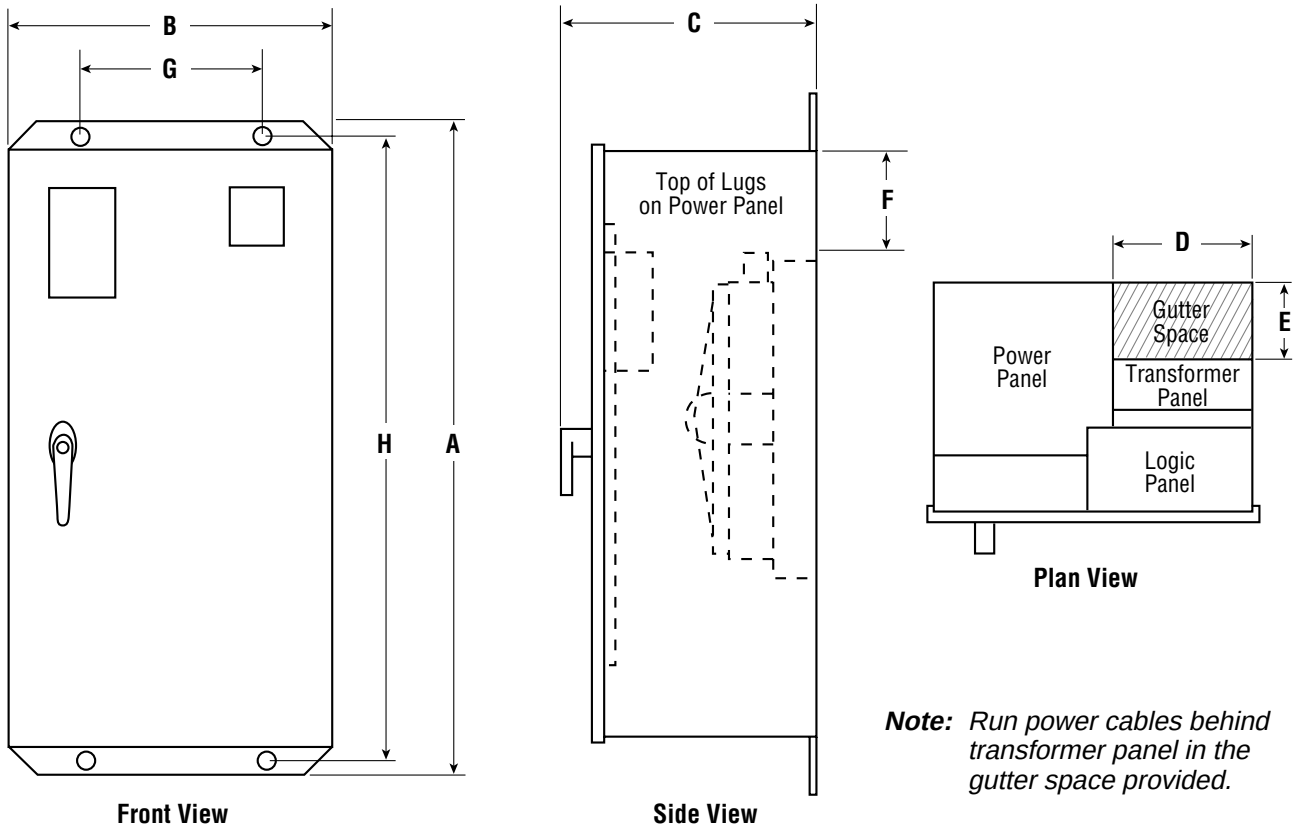

Note: *Run power cables behind transformer panel in the gutter space provided.*

Switch Type	Power Panel			Enclosure			Gutter Space			Bolt Pattern		Approx. Shipping Weight
	Height	Width	Depth	Height	Width	Depth	Width	Depth	Bending	Horizontal	Vertical	
	In. (mm)	In. (mm)	In. (mm) ①	In. (mm) A	In. (mm) B	In. (mm) ② C	In. (mm) D	In. (mm) E	In. (mm) F	In. (mm) G	In. (mm) H	lbs.(kg)
FD (30-150A)	11.00 (279)	17.00 (432)	6.81 (173)	44 (1118)	21 (533)	18.13 (461)	21 (533)	14.5 (368)	4 (102)	11.00 (279)	42.86 (1089)	240 (109)
KD (225A)	24.50 (622)	11.88 (302)	17.5 (445)	44 (1118)	21 (533)	19.63 (499)	8 (203)	4.00 (102)	6 (152)	11.00 (279)	42.86 (1089)	310 (140)
KD (300A)	24.50 (622)	11.88 (302)	17.5 (445)	52 (1321)	21 (533)	19.63 (499)	8 (203)	4.00 (102)	9 (229)	11.00 (279)	50.86 (1292)	310 (140)
LD (400A)	26.00 (660)	16.88 (429)	17.5 (445)	61 (1549)	26 (660)	19.63 (499)	8 (203)	4.00 (102)	11 (279)	16.00 (406)	59.86 (1520)	440 (199)
MA (600A)	36.25 (921)	16.88 (429)	17.5 (445)	73 (1854)	26 (660)	20.63 (524)	8 (203)	4.75 (121)	12 (305)	16.00 (406)	71.86 (1825)	530 (240)
MD (600A)	36.25 (921)	16.88 (429)	17.5 (445)	73 (1854)	26 (660)	20.63 (524)	8 (203)	4.75 (121)	12 (305)	16.00 (406)	71.86 (1825)	530 (240)
NB (800A)	36.25 (921)	16.88 (429)	19.0 (483)	79 (2007)	26 (660)	20.63 (524)	8 (203)	4.75 (121)	15 (381)	16.00 (406)	77.86 (1978)	590 (267)
NB (1000A)	36.25 (921)	16.88 (429)	19.0 (483)	79 (2007)	26 (660)	20.63 (524)	8 (203)	4.75 (121)	15 (381)	16.00 (406)	77.86 (1978)	590 (267)
ND (800A)	36.25 (921)	16.88 (429)	19.0 (483)	79 (2007)	26 (660)	20.63 (524)	8 (203)	4.75 (121)	15 (381)	16.00 (406)	77.86 (1978)	590 (267)
ND (1000A)	36.25 (921)	16.88 (429)	19.0 (483)	79 (2007)	26 (660)	20.63 (524)	8 (203)	4.75 (121)	15 (381)	16.00 (406)	77.86 (1978)	590 (267)

Logic Panel: 38 in. H x 11 in. W x 6.5 in. D/965 mm H x 279 mm W x 165 mm D

Transformer Panel: 22 in. H x 16.5 in. W x 6.5 in. D/559 mm H x 419 mm W x 165 mm D (30 - 100A)
28.63 in. H x 8.25 in. W x 5.5 in. D/727 mm H x 210 mm W x 140 mm D (150 - 1000A)

① Depth includes the interior handle extended.
② Enclosure depth includes the exterior (or door) handle.

Figure 4-1 Enclosed Automatic Transfer Switch Dimensions and Approximate Weights

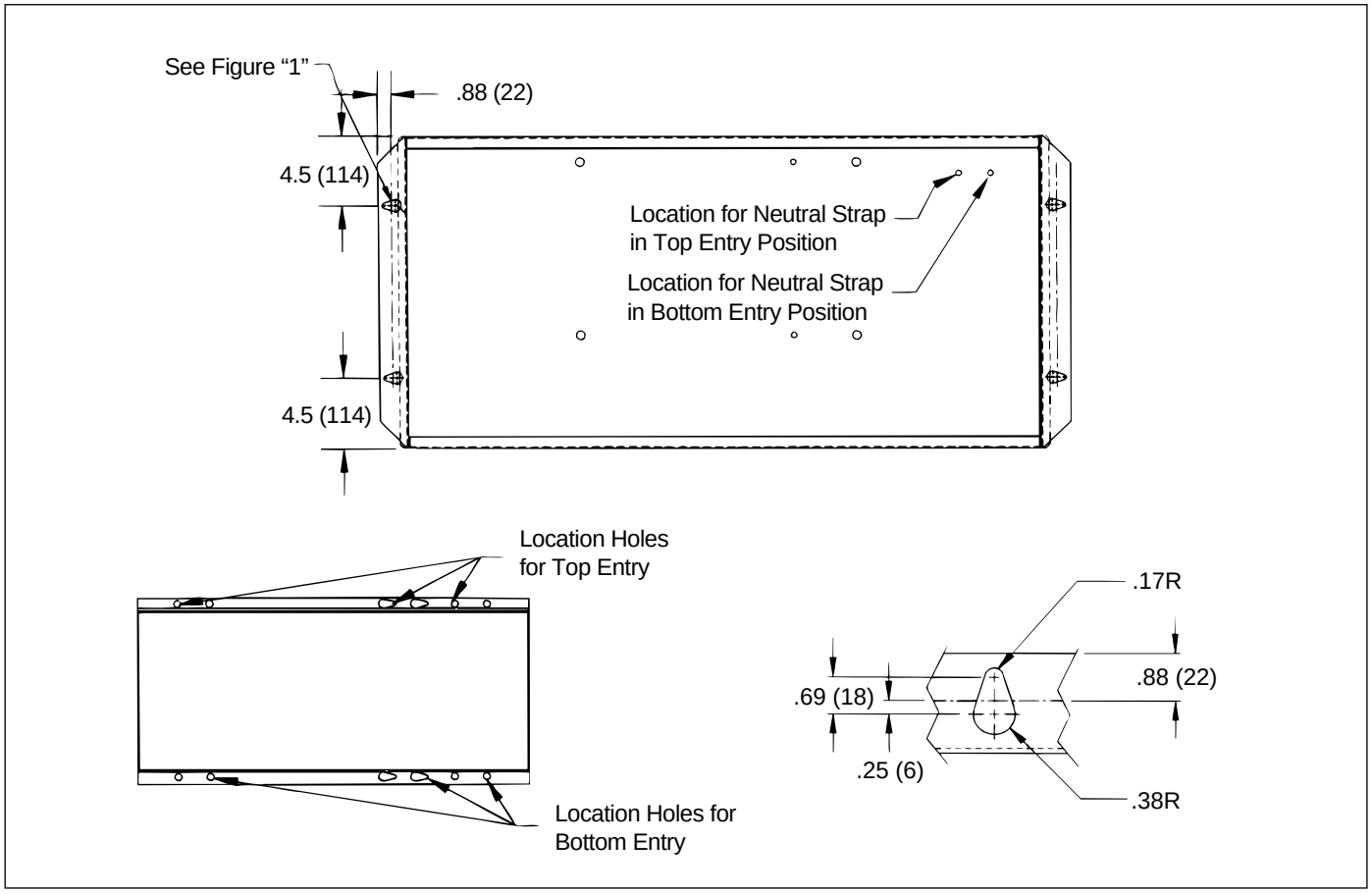

Figure 4-2 Vertical Design Power Panel Mounting Reference in Inches (mm)

With the enclosed transfer switch equipment unpacked and ready for mounting, proceed with the following steps:

Step 1: The transfer switch enclosure door is hinge mounted with removable hinge pins. To simplify the mounting procedure and avoid damaging the door mounted logic panel, carefully remove the door and set aside in a safe place until mounting is complete.

Step 2: Install required mounting bolt anchors and the two upper mounting bolts in the mounting surface.

Step 3: Gently lift the enclosure and guide the elongated holes in the upper mounting flange over the upper mounting bolts, but do not completely tighten the bolts.

Step 4: While still supporting the enclosure, install the two lower mounting bolts in the lower mounting flange, but do not completely tighten. Use shims, if required, to prevent deformation of the enclosure when the mounting surface is distorted.

Step 5: Tighten all four mounting bolts after any required shimming is completed.

Step 6: Double check to ensure that all packing and shipping material has been removed.

4.4 VERTICAL DESIGN LOAD LUG LOCATION

Transfer switch equipment is supplied as standard from the factory with its load terminal lugs at the top. If the

load lugs are to be repositioned to the bottom, do it at this time before wiring the unit or making power cable connections.

WARNING

IF THE LOAD LUG LOCATION IS BEING CHANGED ON ALREADY INSTALLED TRANSFER SWITCH EQUIPMENT, MAKE SURE THAT THE NORMAL, EMERGENCY AND OTHER POWER SOURCES CONNECTED TO THE EQUIPMENT ARE DE-ENERGIZED. HAZARDOUS VOLTAGES ARE PRESENT INSIDE TRANSFER SWITCH EQUIPMENT AND CAN CAUSE SEVERE PERSONAL INJURY OR DEATH.

With the solid steel shield removed, proceed with the following steps (Figure **1-3**):



Figure 4-3 Vertical Design Load Lug Assembly Shown Mounted

Step 1: Disconnect the power panel from the rest of the transfer switch by unplugging the connector plugs (S1, S2 and S3) (Figure **4-4**).

Step 2: Remove the bolt that bonds the neutral strap to the rear of the enclosure, if it is in place

Step 3: Remove the four bolts that secure the power panel in the enclosure. Depending upon the size of the panel, it may be advisable to have assistance with the removal. Once the power panel is free, carefully move it to a solid work surface (Figure **3-1**).

NOTICE

At this point, take the time to refer to Figure 4-2 and become familiar with the inside rear of the enclosure and the power panel mounting provisions available for both top and bottom entry. It will facilitate re-installation of the power panel.

Step 4: Remove the operating mechanism from the front of the power panel by removing the six bolts holding the mechanism in position. The molded case switches or optional circuit breakers do not have to be removed (Figure **3-3**).

NOTICE

The rear mounted load lugs, dip insulated bus bars, standoff insulators, glass polyester phase barriers, and metal mounting bracket are designed to be removed as one load lug assembly (Figure 4-3).

Step 5: The load lug assembly, just mentioned, is removed by first removing the six or eight bolts securing the pieces of insulated bus to the back of the power panel. The number of mounting bolts depends upon whether 3 or 4-pole devices are installed. Mounting bolts are accessed through holes in the load end of the molded case switches or optional circuit breakers.

Step 6: Next, remove the 4 bolts holding the mounting bracket to the upper rear portion of the power panel. The load lug assembly can now be removed as one unit. Note that there are grooves in the back of the power panel and in the mounting bracket that keep the polyester phase barriers in their proper positions.

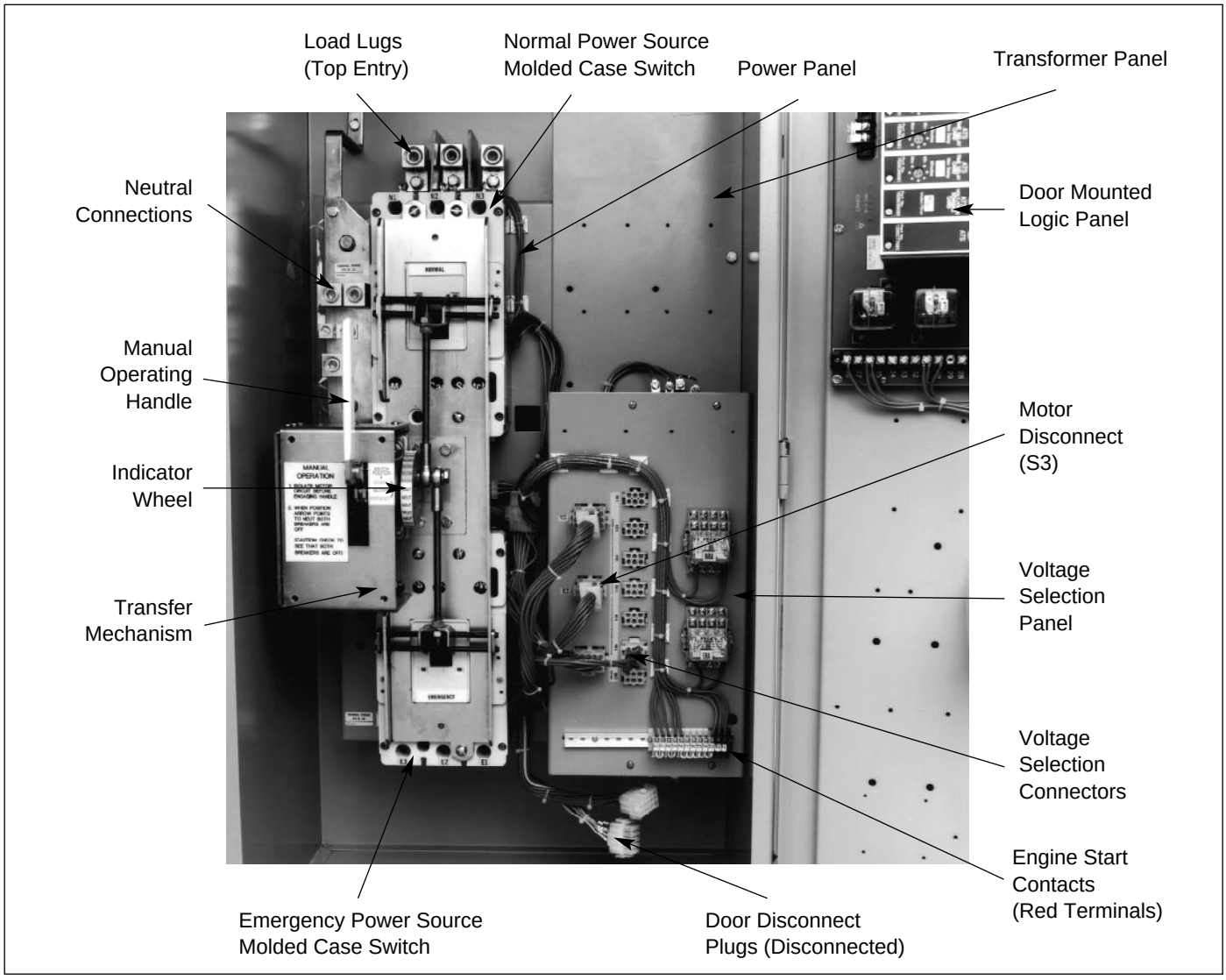

Figure 4-4 Typical (225-1000 Amperes) Vertical Design Transfer Switch Equipment (Door Open and Deadfront Shield Removed)

Step 7: Turn the load lug assembly 180° with the lugs at the bottom and remount the assembly by reversing the procedures described in Steps 5 and 6. The mounting bracket will now be bolted to the bottom of the power panel. Make certain that all glass polyester phase barriers are in place and positioned properly in the grooves provided. When making any bolted connection to the bus, comply with the torque requirements as outlined in Table **4.1**.

Table 4.1 Bolted Bus Connection Torque Requirements

Power Panel Switching Device	Torque ft-lb (Nm)
Type FD	10 (13)
Type KD	20 (27)
Type LD	25 (33.8)
Type MA/MD	25 (33.8)
Type ND/NB	25 (33.8)

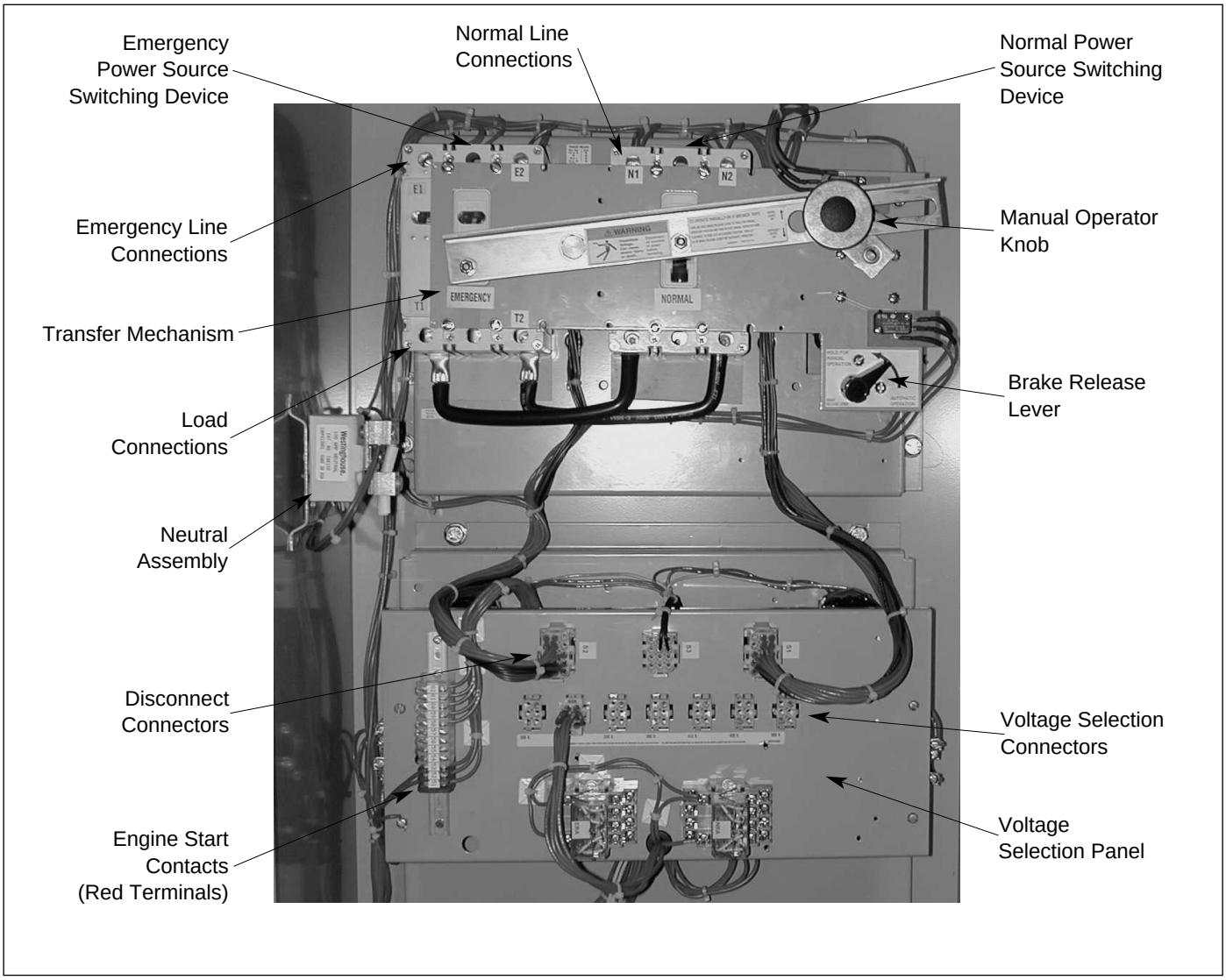

Figure 4-5 Typical (30-100 Amperes) Horizontal Design Transfer Switch Equipment (Door Open)

Step 8: Remount the operating mechanism to the front of the power panel with the six bolts removed previously in Step 4.

Step 9: Position the power panel in the enclosure such that the two upper elongated holes, one on either side of the power panel, fit over the two positioning bolts located in the rear of the enclosure. This will line up the four correct mounting holes in the power panel with the pre-tapped inserts in the rear of the enclosure.

Step 10: With the power panel held securely against the back of the enclosure, replace and tighten the four mounting bolts removed previously in Step 3.

Step 11: Attach the neutral strap to the back of the enclosure through the upper bonding hole, which may or may not have been previously removed in Step 2

Step 12: Reconnect the connector plugs and the transfer switch equipment is now configured for bottom entry.

4.5 POWER CABLE CONNECTIONS

WARNING

POWER CONDUCTORS MAY HAVE VOLTAGE PRESENT THAT CAN CAUSE SEVERE PERSONAL INJURY OR DEATH. DE-ENERGIZE ALL POWER OR CONTROL CIRCUIT CONDUCTORS TO BE CONNECTED TO THE TRANSFER SWITCH EQUIPMENT BEFORE BEGINNING TO WORK WITH THE CONDUCTORS AND/OR TERMINATING THEM TO THE EQUIPMENT.

CAUTION

USE OF CABLE LUGS NOT DESIGNED FOR THE TRANSFER SWITCH MAY CAUSE HEATING PROBLEMS. BREAKER LUGS ONLY MOUNT TO THE BREAKER, WHILE TRANSFER SWITCH LUGS MOUNT TO BOTH THE BREAKER AND THE BUSBAR BEHIND THE BREAKER. FOR INSTALLATION INSTRUCTIONS, REFER TO THE INSTRUCTION LEAFLET SUPPLIED FOR THE SPECIFIC LUGS.

CAUTION

TO HELP PREVENT COMPONENT DAMAGE OR FUTURE MALFUNCTIONS, USE EXTREME CARE TO KEEP CONTAMINANTS OUT OF THE TRANSFER SWITCH EQUIPMENT WHEN MAKING POWER CABLE CONNECTIONS.

Proceed with the following steps:

Step 1: Verify that the line and load cables comply with applicable electrical codes.

Step 2: Verify that transfer switch rated current and voltage (see identification plate on the intelligence panel of transfer switch) agree with system current and voltage.

Step 3: After the transfer switch is mounted, provide conduit or cable openings as required. Ensure that no metal filings contaminate the transfer switch components.

Step 4: Test all power cables before connecting to the unit to insure that conductors or cable insulation have not been damaged while being pulled into position.

Step 5: Carefully strip insulation from the power cables. Avoid nicking or ringing of the conductor strands. Prepare the stripped conductor termination end by cleaning it with a wire brush. If aluminum conductors are used, apply an appropriate joint compound to the clean conductor surface area. Refer to Figure **4-3** for approximate locations of power connections.

Power cables are to be connected to solderless screw type lugs located on the transfer switch switching devices. Verify that the lugs supplied will accommodate the power cables being used. Also verify that the cables comply with local electrical codes. Standard transfer switch equipment, as supplied from the factory, will accommodate the wire sizes shown in Table **4.2**.

CAUTION

IMPROPER POWER CABLE CONNECTIONS CAN CAUSE EXCESSIVE HEAT AND SUBSEQUENT EQUIPMENT FAILURE.

Step 6: Tighten cable lugs to the torque identified on the label affixed to the unit immediately adjacent to the lugs.

Step 7: Make necessary connections of options using wiring diagrams supplied with the unit.

Step 8: Connect engine start wires to the red terminal blocks marked 51 and 52.

Table 4.2 Transfer Switch Equipment Wire Sizes

Transfer Switch Amp Rating	Wire Size Range	Number of Cables per Phase
30-100	#14 - 3/0	1
150	#6 - 300 MCM	1
150-300	#3 - 350 MCM	1
400	250 - 350 MCM	2
600 (3P)	#1 - 500 MCM	2
600 (4P)	3/0 - 400 MCM	3
800	3/0 - 400 MCM	3
1000	4/0 - 500 MCM	4

CAUTION

DO NOT RUN POWER CABLES BEHIND OR TO THE LEFT OF THE POWER PANEL. THE CABLES SHOULD BE RUN IN THE GUTTER SPACE PROVIDED AS SHOWN IN FIGURE 4-1. RUNNING THE CABLES IN PLACES NOT RECOMMENDED COULD INTERFERE WITH THE PROPER OPERATION OF THE TRANSFER SWITCH.

NOTICE

Remember to re-attach the solid steel power panel deadfront shield to the ratchet assembly on the vertical design after completing any of the procedures described in this section.

4.6 WIRING

CAUTION

POWER CONDUCTORS AND CONTROL WIRING MAY HAVE VOLTAGE PRESENT THAT CAN CAUSE SEVERE PERSONAL INJURY OR DEATH. DE-ENERGIZE ALL POWER OR CONTROL CIRCUIT CONDUCTORS BEFORE BEGINNING TO PERFORM ANY WIRING ACTIVITY TO OR WITHIN THE TRANSFER SWITCH EQUIPMENT.

Power sources, load conductors and control wiring should be connected to locations as indicated in the **Customer Wiring Booklet** supplied with the transfer switch equipment.

CAUTION

DO NOT RUN POWER CABLES BEHIND OR TO THE LEFT OF THE POWER PANEL. THE CABLES SHOULD BE RUN IN THE GUTTER SPACE PROVIDED AS SHOWN IN FIGURE 4-1. RUNNING THE CABLES IN PLACES NOT RECOMMENDED COULD INTERFERE WITH THE PROPER OPERATION OF THE TRANSFER SWITCH.

CAUTION

CHECK THE TRANSFER SWITCH EQUIPMENT NAMEPLATE FOR RATED VOLTAGE. IT SHOULD BE THE SAME AS THE NORMAL AND EMERGENCY LINE VOLTAGES. OPERATING THE EQUIPMENT ON IMPROPER VOLTAGE CAN CAUSE EQUIPMENT DAMAGE.

Once the transfer switch equipment has been installed and wired, perform initial mechanical and electrical procedures as outlined in Section 6 to verify that the equipment is installed and operating properly.

NOTICE

Remember to re-attach the solid steel power panel deadfront shield to the ratchet assembly on the vertical design after completing any of the procedures described in this section.

4.7 VOLTAGE SELECTION ADJUSTMENTS

Certain devices, such as the Voltage Selection Panel, sensing relays and timers, need to be set and/or calibrated prior to placing the transfer switch equipment into service. Adjustments for logic devices are described in the separate instructional document dedicated to the specific logic being used. Voltage selection adjustments are described here.

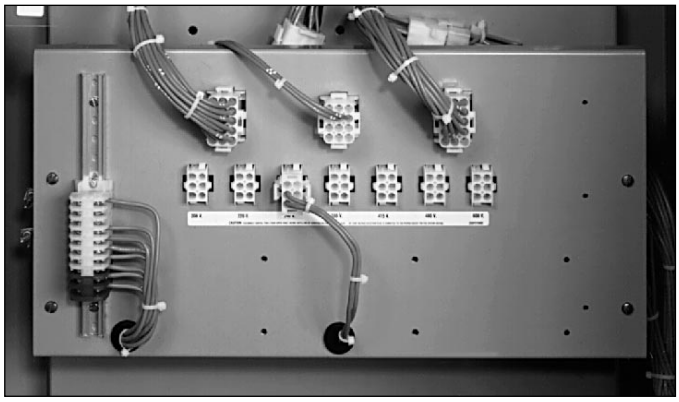

Figure 4-6 Line Voltage Plug and Receptacles (shown with covers removed) for Horizontal Design

CAUTION

BE SURE THAT THE CORRECT VOLTAGE IS SELECTED TO MATCH THE SYSTEM VOLTAGE. AN IMPROPER SELECTION AND/OR CONNECTION COULD RESULT IN EQUIPMENT DAMAGE.

Vertical Design Voltage Selection

The vertical design transfer switch is furnished with a multi-tap Voltage Selection Panel to the right of the power panel. Seven front accessible taps from 208 to 600 volts AC are provided (Figure **3-4**). A small disconnect plug is provided to change from one voltage to another.

Horizontal Design Voltage Selection

Horizontal design transfer switches are furnished with an adjustable line voltage plug and receptacles below the power panel. To change the line voltage, remove the covers and insert the plug in the desired receptacle (Figure **4-6**).

4.8 TERMINAL BLOCK WIRE INSTALLATION AND REMOVAL

Proceed with the following steps and associated pictures to install or remove terminal block wiring.

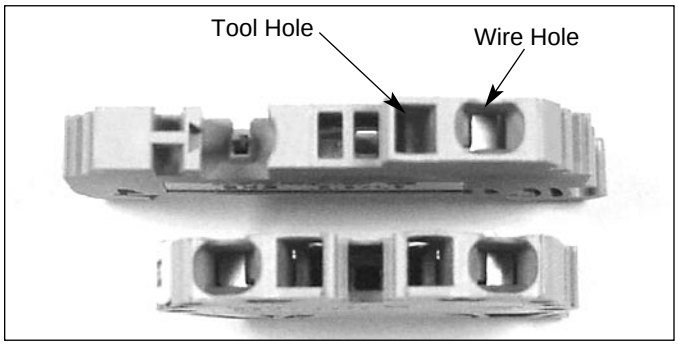

Step 1: Pictured above are two tension clamp terminal blocks. There is a large one and small one, but the operation is the same for both. A small tool, such as a screwdriver, will be pushed into the square hole next to the wire hole and a wire will be inserted into the larger circular hole on the outer edge.

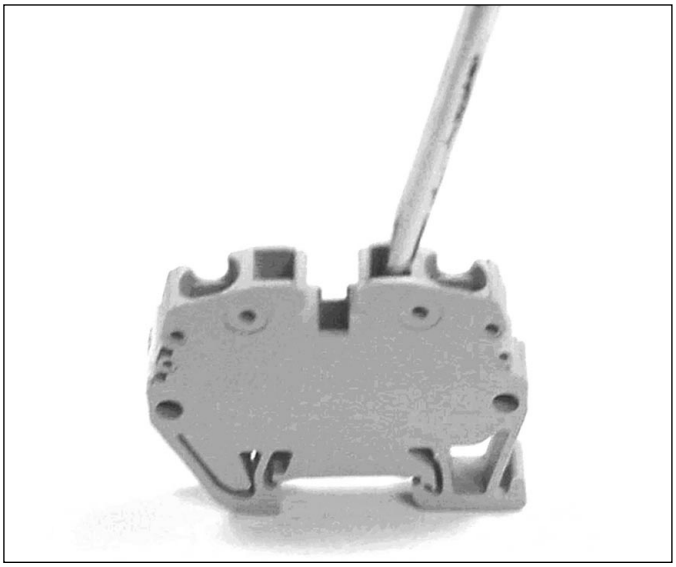

Step 2: Begin by inserting a small, flathead screwdriver into the square (tool) hole with the flat surface of the screwdriver against the back wall of the hole. With a little bit of force, push the screwdriver in on a slight angle toward the center of the clamp. Be sure to slide it in until it clicks. You will then see the clamp open in the wire hole.

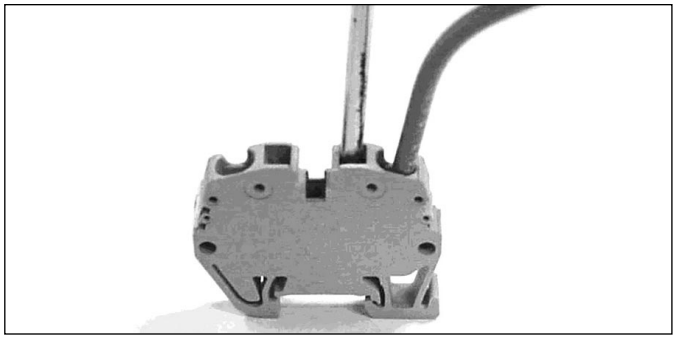

Step 3: Once the screwdriver is in place, obtain a stripped wire (strip about 1/4 of an inch) and insert it into the larger circular wire hole. Push the wire in until it can go no further.

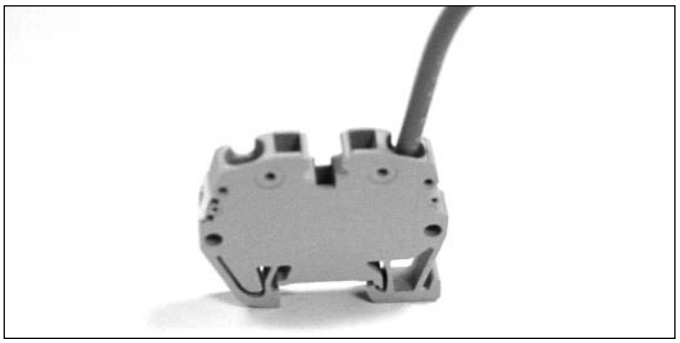

Step 4: Next, while holding the wire in place, pull the screwdriver out. The wire will now be held in securely. Finally, pull on the wire to insure that it is correctly inserted into the clamp.

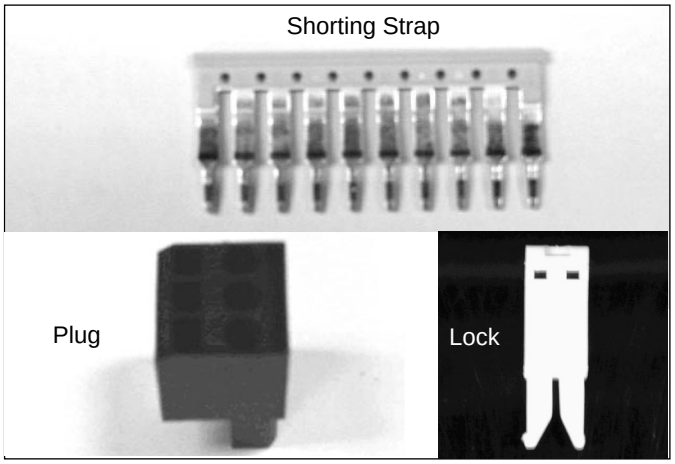

Step 5: There are three additional pieces to these terminal blocks. The plug and lock can only be used with the large terminal block, while the yellow shorting strap can be used for both.

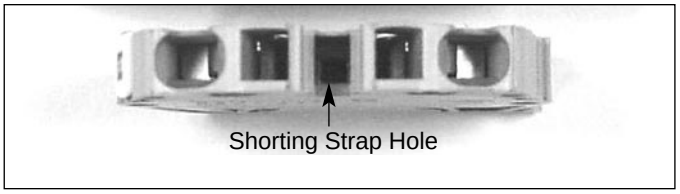

Step 6: To insert the shorting strap into the smaller terminal block, place the strap into the small square holes directly in the middle of the block. Then, push the shorting strap in until it snaps into place. When inserted correctly, the shorting strap will be a little below the top of the terminal block.

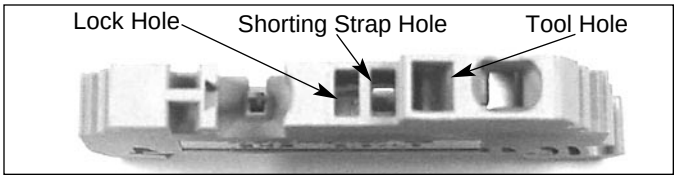

Step 7: This picture shows the top of the large terminal block, which has two small square holes in its center (one is used for the shorting strap and the other hole is for the lock). First, insert and push the shorting strap into the square hole right next to the tool hole. When the piece snaps into place, the top of it should lie a little above the top of the terminal block.

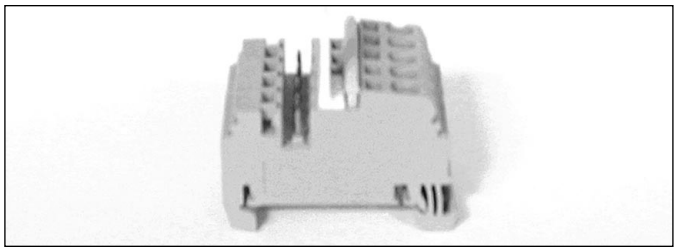

Step 8: The lock can now be inserted. The pointed side of the lock is the bottom and the flat side is the top. With the overhanging part of the lock towards the pins and the pointed side facing down, push the lock into the small square holes next to the shorting strap. Make sure that when this is being done, the shorting strap does not stop the lock from being pushed all the way in. If this is the case, the lock has been inserted backwards and should be turned around. Once the lock has been inserted correctly, it will snap into place.



Step 9: After the shorting strap and lock are in place, the plug can be attached by sliding the single row of holes at the bottom of the piece overtop the metal rods of the terminal block. Match the rounded edge of the plug with the rounded edge of the terminal block and gently push the pieces together. The piece should snap when correctly in place.

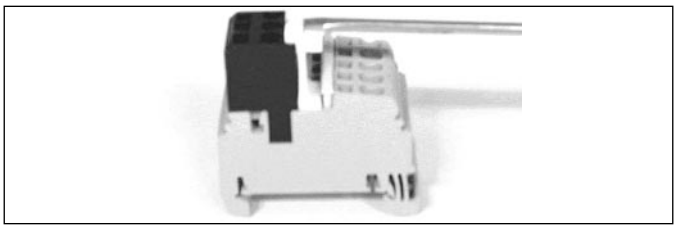

Step 10: Once the plug is snapped in place, the lock will need to be pushed over it. In order to do this you can either insert a flathead screwdriver into the small rectangular hole at the top of the lock or you could squeeze the lock and plug together using your fingers. When using the screwdriver, insert it into the rectangular hole of the lock, from the side opposite to the plug. Next push the back of the screwdriver down (which will lift up the top of the lock a little) and guide the lock overtop the plug by pushing the screwdriver towards the plug. When correctly together, it should now not be possible to pull the plug out without removing the lock first.

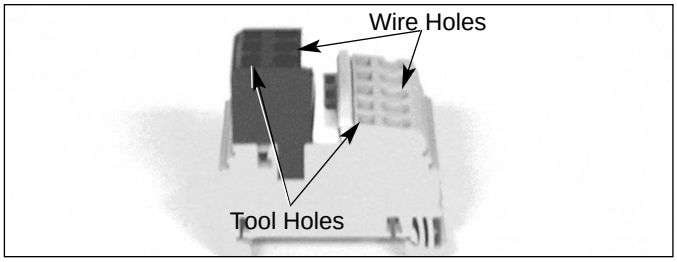

Step 11: The picture above shows the exact position of the additional pieces on the large terminal block. Once they are in place, repeat steps 2) through 4) to correctly wire the tension clamp terminal block. Note that the square tool holes on the plug are facing the outside of the assembly.

Step12: If these additional pieces would need to be removed, you should do the following:

1.Remove the lock by inserting a screwdriver from the same side as the plug into the small rectangular hole at the top of the lock.

2. Push the screwdriver down and push it away from the plug.

3. Pull the plug out.

SECTION 5: OPERATION

5.1 GENERAL

A transfer switch provides main contacts to connect and disconnect the load to and from the normal and emergency power sources (Paragraph 3.2.2). A transfer mechanism provides the mechanical motion required to open and close the mechanically interlocked main contacts (Paragraphs 3.2.3, 3.2.4 and Figure **3-3**).

Three distinct switch positions are provided:

- ***Normal*** - The contacts associated with the normal power source are closed and the emergency power source contacts are open.
- ***Neutral*** - The contacts associated with both the normal power source and emergency power source are open. This position allows for load circuit maintenance.
- ***Emergency*** - The contacts associated with the normal power source are open and the emergency power source contacts are closed.

5.2 VERTICAL DESIGN OPERATION

The vertical design transfer switch utilizes a mechanical mechanism with a manual operating handle (Figure **4-4**). The manual operating handle can be used to create the rotational motion required to open and close the main contacts through a rigid mechanical interlocking system (Figure **5-1**). An indicator wheel attached to the operating handle and mechanical interlocking system rotates with each movement of the handle to open and/or close the main contacts (Figure **5-2**). The three switch positions (Normal, Neutral and Emergency) are visually indicated on the indicator wheel (Figure **5-3**).

To manually operate the transfer switch, the operating handle is ratcheted until the desired switch position is indicated on the indicator wheel. The operating handle is always electrically “dead,” and the indicator wheel free-wheels should a particular switch be capable of electrical operation through the use of a motor. This feature ensures no operator problems should the switch automatically operate while the manual handle is being used.

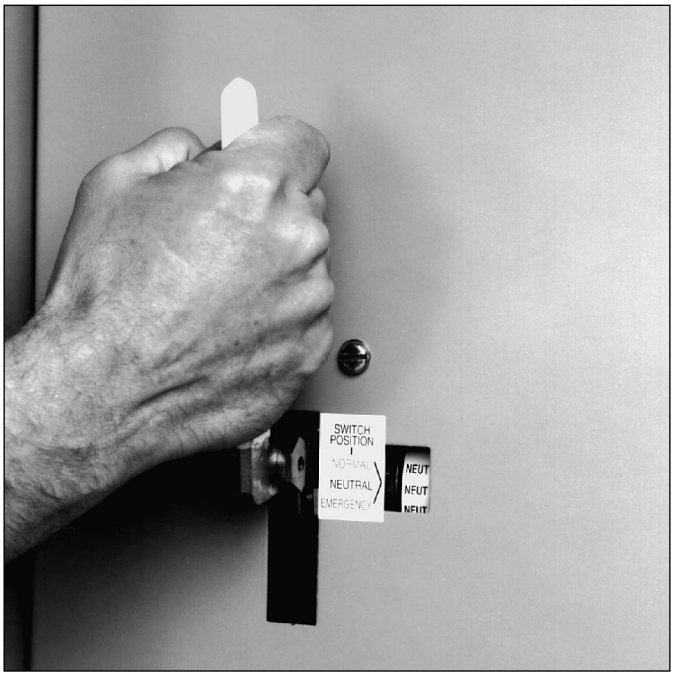

Figure 5-1 Transfer Switch Manual Operating Handle in Use on Vertical Design

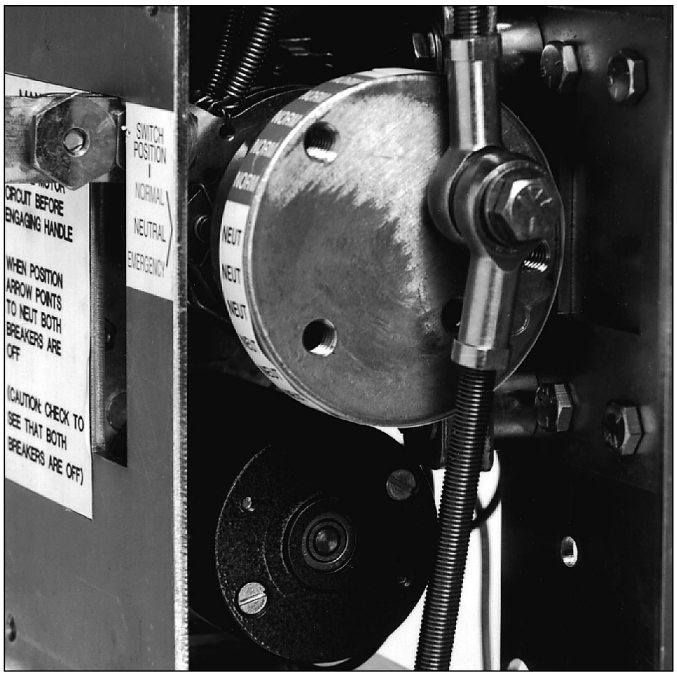

Figure 5-2 Indicator Wheel Shown Mounted in Mechanism with Motor Mounted Under Wheel

NOTICE

If a transfer switch with any kind of electrical operating capabilities is to be operated manually utilizing the manual operating handle, it is strongly recommended that the transfer motor circuit first be isolated. This is accomplished by unplugging the (S3) plug marked motor disconnect (Figure 5-4). If, however, a transfer switch is supplied with a four position selector switch (Option 6H), it can be turned to the "OFF" position, making it unnecessary to unplug the plug. In the case of the automatic transfer switch design, any attempt to operate the manual handle without first isolating the motor circuit causes an automatic transfer.

5.3 HORIZONTAL DESIGN OPERATION

The horizontal design transfer switch utilizes a pivoting rocker-arm lever which operates the circuit breaker handles as the arm is moved by a rotating lever usually connected to a transfer motor (Figure **4-5**). A slide pin engaging a pivot in the rotating lever converts rotary motion to linear motion. Motor limit switches, for motor equipped transfer switches, are mounted external to the molded case switches and operated by the rotating lever. Each limit switch is synchronized with its associated switch to operate when the switch closes.

To operate breaker manually or if the breaker trips, unplug P3 from S3 to disconnect the motor circuit (Figure **5-4**). Turn and hold the break release lever to "HOLD FOR MANUAL OPERATION" position, and then rotate the manual operator knob in either direction to move the ATS into the desired position. Let go of the brake release lever for "AUTOMATIC OPERATION".

NOTICE

If a transfer switch with any kind of electrical operating capabilities is to be operated manually, it is strongly recommended that the transfer motor circuit first be isolated. This is accomplished by unplugging the disconnect link. In the case of the automatic transfer switch design, any attempt to operate the manual handle without first isolating the motor circuit causes an automatic transfer.

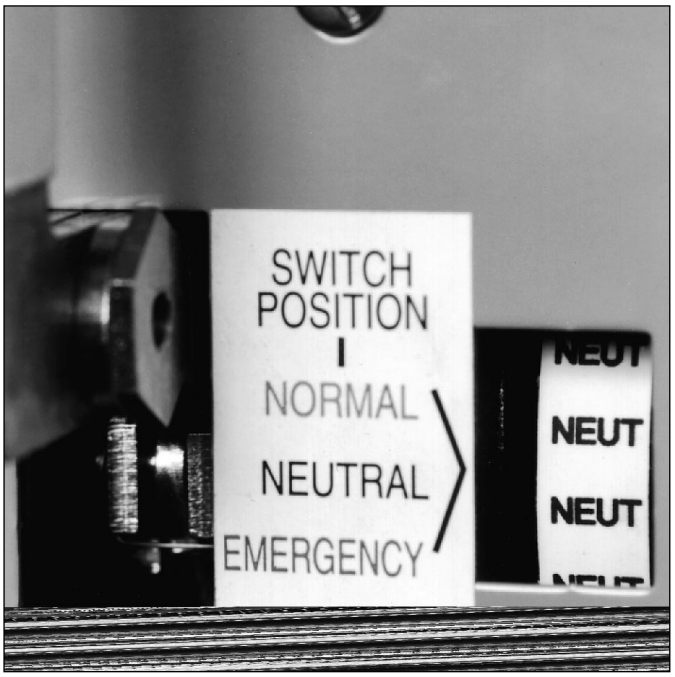

Figure 5-3 Indicator Wheel Indicating Neutral Position on Vertical Design

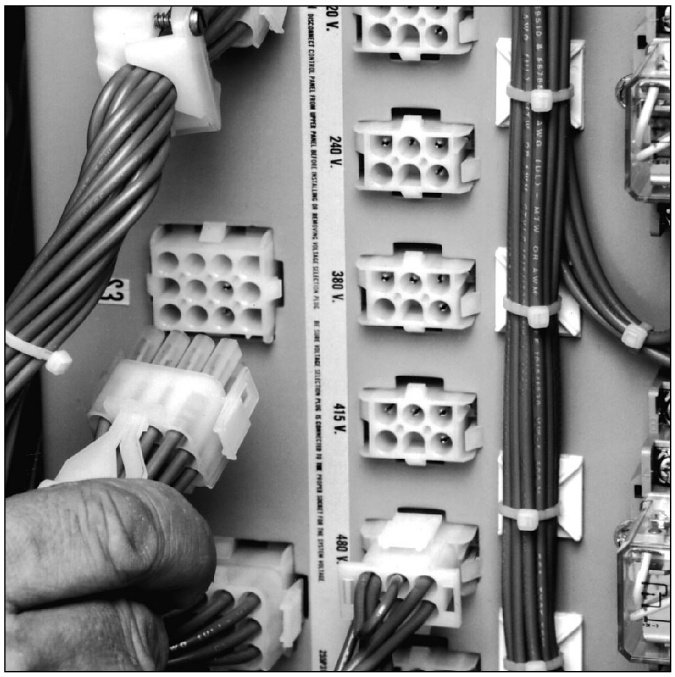

Figure 5-4 Motor Disconnect Being Unplugged

5.4 NON-AUTOMATIC OPERATION (MANUALLY OPERATED)

A non-automatic (manually operated) transfer switch (Paragraph 1.2.1) functions as described in Paragraphs 5.1 through 5.3. All transfer operations are accomplished by true hand operation, with no power assistance of any kind.

5.5 NON-AUTOMATIC OPERATION (ELECTRICALLY OPERATED)

A non-automatic (electrically operated) transfer switch (Paragraph 1.2.1) functions similarly to the non-automatic (manually operated) transfer switch except for the addition of an electrical operating feature. This feature permits the main contacts to be opened or closed electrically. There is, however, no intelligence circuit associated with this design.

Electrical operation is accomplished by adding a motor and required circuitry to the manual mechanism and wiring it to a pushbutton on the front of the enclosure (Figure **5-5**). The pushbutton can be pushed to test the transfer switch or held to make an electrical transfer. The switch's operating position can be visually indicated on the front of the enclosure by using optional indicating lights.



Figure 5-5 Electrical Operation Pushbutton and Position Indicating Lights Shown Mounted

Pushing and holding the pushbutton causes the motor to operate and automatically transfer the load by opening and closing the main contacts. Since an intelligence circuit is not part of the design, operation of the pushbutton is required each time an electrical transfer is required, whether it is from Normal to Emergency or vice versa.

5.6 AUTOMATIC TRANSFER SWITCH

The automatic transfer switch incorporates all the features and utilizes the same designs as the switches described in Paragraphs 5.4 and 5.5, except that intelligence and supervisory capabilities are added to the switch by the addition of a logic panel in the enclosure or on the enclosure door (Figures **1-4** and **3-5**). The logic panel can be as sophisticated or simple as required, depending upon the number and types of options selected.

The operating sequence of an automatic transfer switch is dictated by the switch's standard features and selected options. Operation of an automatic transfer switch during normal source failure and normal source restoration will be described here with only standard options included on the switch. Additional options, as described in the separate instructional document dedicated to the specific logic being used, can change sequences and timing, depending upon the options selected. Refer to paragraph 3.4. Become familiar with additional options selected and their effect on the normal operation of an automatic transfer switch.

Normal Power Source Failure

Standard normal power source failure is defined as a reduction or loss of voltage. If this occurs, the sequence of operation is as follows:

- Failure of the normal power source is detected by the logic.
- When the logic detects a failure, it will close a contact which starts the engine driven generator.
- When the emergency power source voltage and frequency reaches its operation range, the logic begins the transfer operation. This operating sequence opens the Normal Power Source Switching Device (NB) and closes the Emergency Power Source Switching Device (EB).
- The load is now transferred to emergency power source.

Normal Source Restoration

- A return to the normal power source begins when the voltage in all phases of a three phase sensing unit or line-to-line in a single phase sensing unit is restored to its operating range.
- At preset levels, the logic starts the return to the normal power source and normal transfer switch operation.
- During this sequence, the Emergency Power Source Switching Device is opened and the Normal Power Source Switching Device is closed.
- Simultaneously, the logic initiates the shut down of the engine driven generator.
- Transfer of the load back to the normal power source is now completed.

SECTION 6: TESTING AND PROBLEM SOLVING

6.1 TESTING

After transfer switch equipment is initially installed or during planned outages, the installation should be tested to insure that all equipment operates properly. This attention to detail will help to avoid unexpected malfunctions. Mechanical and/or electrical tests should be performed.

The frequency of subsequent testing should be based on recommendations of the generator set manufacturer. Use the test pushbutton to check the electrical operation of the switch. IF A TEST SWITCH IS PROVIDED, ALWAYS RETURN THE SWITCH TO THE AUTO POSITION AFTER THE TEST IS COMPLETE.

WARNING

HIGH VOLTAGES ASSOCIATED WITH OPERATIONAL TRANSFER SWITCH EQUIPMENT PRESENT A SHOCK HAZARD THAT CAN CAUSE SEVERE PERSONAL INJURY OR DEATH. USE EXTREME CAUTION TO AVOID TOUCHING ELECTRICAL CONNECTIONS WHENEVER INSPECTING OR TESTING THE EQUIPMENT.

IN ADDITION, IMPROPER OPERATION OF THE GENERATOR SET PRESENTS A HAZARD THAT CAN CAUSE SEVERE PERSONAL INJURY OR DEATH. OBSERVE ALL SAFETY PRECAUTIONS IN YOUR GENERATOR SET OPERATIONS AND INSTALLATION MANUALS.

For mechanical operations, refer to Section 5 in this instruction book. Refer to the applicable logic instruction manual for electrical testing. Refer to paragraph 3.4 for logic instruction manuals.

6.2 PROBLEM SOLVING

WARNING

HAZARDOUS VOLTAGES IN AND AROUND TRANSFER SWITCH EQUIPMENT DURING THE PROBLEM SOLVING PROCESS CAN CAUSE PERSONAL INJURY AND/OR DEATH. AVOID CONTACT WITH ANY VOLTAGE SOURCE WHILE PROBLEM SOLVING.

WARNING

ONLY PROPERLY TRAINED PERSONNEL FAMILIAR WITH THE TRANSFER SWITCH EQUIPMENT AND ITS ASSOCIATED EQUIPMENT SHOULD BE PERMITTED TO PERFORM THE PROBLEM SOLVING FUNCTION. IF AN INDIVIDUAL DOES NOT FEEL QUALIFIED TO PERFORM THE PROBLEM SOLVING FUNCTION, THE INDIVIDUAL SHOULD NOT ATTEMPT TO PERFORM ANY OF THESE PROCEDURES.

A basic problem solving effort is the first step to take prior to calling for assistance. Frequently, the effort will successfully address most problems encountered. Most problem solving procedures are outlined in the instruction manual unique to the type of logic being used. In addition, several problem solving procedures are presented here which are specific to the type of switches or circuit breakers used in this equipment.

If a problem persists after having completed the problem solving procedure, contact a Cutler-Hammer representative for further assistance. When calling for assistance, the following is the minimum information required to properly address the need:

1. Shop Order Number (SO#) or General Order Number (GO#) of transfer switch, plus related Item Number
2. Catalog and/or Style Number of transfer switch
3. Actual location of transfer switch (type of facility, address, etc.)
4. Company name
5. Name and position of individual representing company
6. Basic description of situation as it exists
7. Any results of problem solving steps taken and/or readings taken

6.2.1 TRANSFER SWITCH APPEARS INOPERATIVE

Step 1: Verify that all plugs and sockets are properly interconnected.

Step 2: Verify that the correct system voltage appears at NORMAL switch. Measure the voltage at the breaker lugs.

Step 3: Verify that the voltage selection plug is in the proper position to match the system voltage.

Step 4: Look for any obviously overheated components. Determine the cause and rectify, if possible. Replace defective components after the cause is determined.

Step 5: Manually ratchet the mechanism to the NORMAL position. Verify whether or not the system voltage now appears on the load terminals.

If YES: Proceed to check logic for problems in respective logic instruction book.

If NO: Check all power connections and the switching mechanism.

SECTION 7: MAINTENANCE

7.1 INTRODUCTION

WARNING

HIGH VOLTAGES ARE PRESENT IN AND AROUND TRANSFER SWITCH EQUIPMENT. BEFORE INSPECTING OR MAINTAINING THIS EQUIPMENT, DISCONNECT LINE POWER FROM THE EQUIPMENT BEING SERVICED BY OPENING AND LOCKING OUT, IF POSSIBLE, THE NEXT HIGHEST DISCONNECT DEVICE. FAILURE TO FOLLOW THIS PROCEDURE COULD CAUSE PERSONAL INJURY AND/OR DEATH.

In general, transfer switch equipment is designed to be relatively maintenance free under normal usage. However, because of the variability of application conditions and the importance placed on dependable operation by this type of equipment, inspection and maintenance checks should be made on a regularly scheduled basis. Since equipment maintenance will consist mainly of keeping the equipment clean, the frequency of maintenance will depend, to a large extent, on the cleanliness of the surroundings. If a significant amount of dust or foreign matter is present, a more frequent maintenance schedule should be followed.

It is suggested that visual inspections of the equipment be made on a regular basis, not just during regularly scheduled periods. Always be alert for an accumulation of dirt in and around the structure, loose parts and/or hardware, cracks and/or discoloration to insulation, and damaged or discolored components.

7-2 PROCEDURES

A suggested maintenance procedure to follow is outlined in Table **7.1**.

Table 7.1 Periodic Maintenance Procedures

Step	Action
a. Make transfer switch equipment safe for inspection and/or maintenance.	Disconnect line power from equipment being serviced by opening next highest disconnect device. Make certain that any accessory control power is switched off by disconnecting all logic plugs.
b. Inspect structure area for safety hazards or potential maintenance problems.	Inspect area, especially where molded case switching devices are installed, for any safety hazards, including personnel safety and fire hazards. Exposure to certain chemical vapors can cause deterioration of electrical connections. Inspect for accumulated dirt, loose hardware or physical damage. Examine primary insulation for evidence of cracking or overheating. Overheating will show as discoloration, melting, or blistering of conductor insulation, or as pitting or melting of conductor surfaces due to arcing. Inspect secondary control connections for damage, and control wiring for insulation integrity.
c. Inspect molded case switching devices for dust, dirt, soot, grease, moisture or corrosion.	Remove dust, dirt, soot, grease, moisture and corrosion contamination from the surface of the switching device using a dry soft lint-free cloth, dry soft bristle brush and vacuum cleaner. Do not blow debris into circuit breaker or nearby breaker structure. If contamination is found, look for the source and fix the problem.
d. Check for material integrity, uneven wear, discoloration or loose hardware.	Severe material cracking will require replacement and loose hardware will need to be tightened.
e. Check terminals and connectors for looseness or signs of overheating.	Overheating will show as discoloration, melting, or blistering of conductor insulation. Connections that do not have signs of looseness or overheating should not be disturbed.
f. Exercise the molded case switching devices if they are not often exercised while in operation. This will permit wiping action by the contacts.	If a switching device is used for frequent switching during normal operation, this step can be disregarded.
g. Return transfer switch equipment to service.	Make certain all barriers are in place and doors closed. Re-apply secondary and primary power.

This instruction booklet is published solely for information purposes and should not be considered all inclusive. If further information is required, you should consult Cutler-Hammer.

Sale of product shown in this literature is subject to terms and conditions outlined in appropriate Cutler-Hammer selling policies or other contractual agreement between the parties. This literature is not intended to and does not enlarge or add to any such contract. The sole source governing the rights and remedies of any purchaser of this equipment is the contract between the purchaser and Cutler-Hammer.

NO WARRANTIES, EXPRESSED OR IMPLIED, INCLUDING WARRANTIES OF FITNESS FOR A PARTICULAR PURPOSE OR MERCHANTABILITY, OR WARRANTIES ARISING FROM COURSE OF DEALING OR USAGE OF TRADE, ARE MADE REGARDING THE INFORMATION, RECOMMENDATIONS AND DESCRIPTIONS CONTAINED HEREIN. In no event will Cutler-Hammer be responsible to the purchaser or user in contract, in tort (including negligence), strict liability or otherwise for any special, indirect, incidental or consequential damage or loss whatsoever, including but not limited to damage or loss of use of equipment, plant or power system, cost of capital, loss of power, additional expenses in the use of existing power facilities, or claims against the purchaser or user by its customers resulting from the use of the information, recommendations and description contained herein.

Cutler-Hammer
Five Parkway Center
Pittsburgh, PA 15220

Effective 7/01 (ISI)
Style 8165A03H04
Printed in U.S.A.

Cutler-Hammer

Instructions for Cutler-Hammer Genswitch Automatic Transfer Switch (30-1000 Amperes)



Effective December, 1998 Supersedes I.B. ATS-G002 dated October, 1996

EATON

WARNING

READ AND UNDERSTAND THE INSTRUCTIONS CONTAINED HEREINAFTER BEFORE ATTEMPTING TO UNPACK, ASSEMBLE, OPERATE OR MAINTAIN THIS EQUIPMENT.

HAZARDOUS VOLTAGES ARE PRESENT INSIDE TRANSFER SWITCH ENCLOSURES THAT CAN CAUSE DEATH OR SEVERE PERSONAL INJURY. FOLLOW PROPER INSTALLATION, OPERATION AND MAINTENANCE PROCEDURES TO AVOID THESE VOLTAGES.

TRANSFER SWITCH EQUIPMENT COVERED BY THIS INSTRUCTION BOOK IS DESIGNED AND TESTED TO OPERATE WITHIN ITS NAMEPLATE RATINGS. OPERATION OUTSIDE OF THESE RATINGS MAY CAUSE THE EQUIPMENT TO FAIL RESULTING IN DEATH, SERIOUS BODILY INJURY AND/OR PROPERTY DAMAGE. ALL RESPONSIBLE PERSONNEL SHOULD LOCATE THE DOOR MOUNTED EQUIPMENT NAMEPLATE AND BE FAMILIAR WITH THE INFORMATION PROVIDED ON THE NAMEPLATE. A TYPICAL EQUIPMENT NAMEPLATE IS SHOWN IN FIGURE 1.

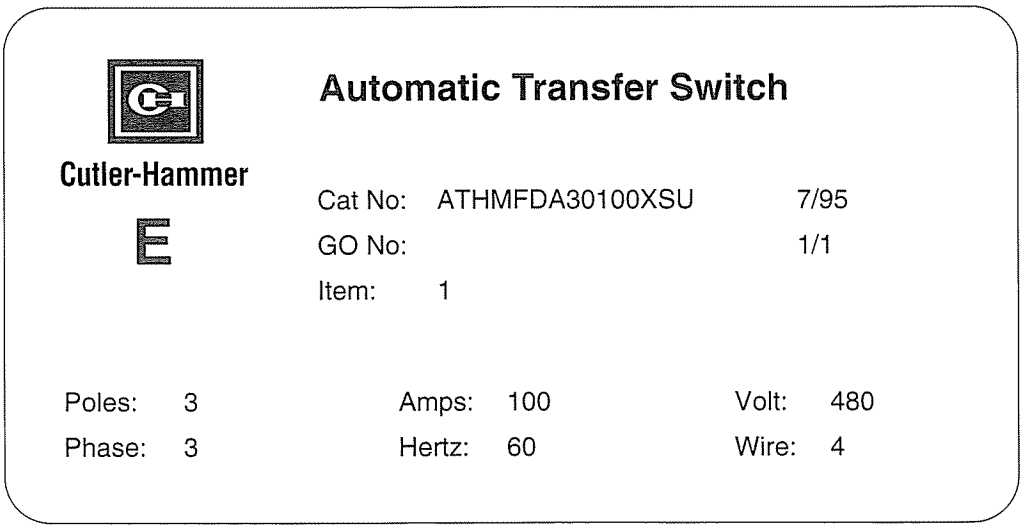

Figure 1 *Typical Automatic Transfer Switch Equipment Nameplate*

All possible contingencies which may arise during installation, operation or maintenance, and all details and variations of this equipment do no purport to be covered by these instructions. If further information is desired by purchaser regarding his particular installation, operation or maintenance of particular equipment, contact a Cutler-Hammer representative.

Katolight Service - Master Repair Manual - Page 4079

TABLE OF CONTENTS

Page

SECTION 1: INTRODUCTION

1.1 Preliminary Comments and Safety Precautions 1
1.1.1 Warranty and Liability Information 1
1.1.2 Safety Precautions 1
1.2 General Information 1
1.2.1 Design Configuration 2
1.3 Transfer Switch Catalog Number Identification 3

SECTION 2: RECEIVING, HANDLING AND STORAGE

2.1 Receiving 4
2.2 Handling 4
2.3 Storage 4

SECTION 3: EQUIPMENT DESCRIPTION

3.1 General 5
3.2 Power Panel 5
3.2.1 Steel Base Plate 5
3.2.2 Main Contacts 5
3.2.3 Transfer Mechanism (225-1000A) 5
3.2.4 Transfer Mechanism (30-150A) 5
3.3 Voltage Seclection Panel 6
3.4 Microprocessor Based Logic Panel 6
3.5 Options 7
3.6 Enclosure 9
3.7 Standards 10

SECTION 4: INSTALLATION AND WIRING

4.1 General 11
4.2 Mounting Location 11
4.3 Mounting Procedure 11
4.4 Load Lug Location 14
4.5 Power Cable Connections 16
4.6 Wiring 17
4.7 Engine Start Connection 17
4.8 Voltage Selection Adjustments 17

SECTION 5: OPERATION

5.1 General 19
5.2 Manual Operation (225-1000A) 19
5.3 Manual Operation (30-150A) 20
5.4 Automatic Transfer 20
5.4.1 Normal Power Source Failure 20
5.4.2 Normal Power Source Restoration 21

Page

SECTION 6: TESTING AND PROBLEM SOLVING

6.1 Testing 22
6.1.1 Mechanical and/or Electrical Testing 22
6.1.2 No Voltage Steps 22
6.1.3 Connecting Power Sources 22
6.1.4 Operational Checks 23
6.1.5 Alternative Tests 23
6.2 Problem Solving 23
6.2.1 Transfer Switch Appears Inoperative 24
6.2.2 Motor Keeps Turning and Transfer Switch will not Stop in Position 24
6.2.3 Transfer Switch will not Automatically Transfer to Normal 24
6.2.4 Transfer Switch will not Automatically Transfer to Emergency 25

SECTION 7: MAINTENANCE

7.1 General 27
7.2 Plant Exerciser Timer 27
7.2.1 Timer Programming 27
7.3 Microprocessor Based Logic 27
7.3.1 Voltage Sensing Functions 27
7.3.2 Frequency Sensing Functions 27
7.3.3 Time Delay Functions 27
7.3.4 On-Board Indicators 29
7.3.5 Instructions for Dip Switch Setting 29

SECTION 8: MAINTENANCE

8.1 Introduction 32
8.2 Procedures 32

Katolight Service - Master Repair Manual - Page 4081

LIST OF FIGURES

Figure	Title	Page
1-1	Typical Load Transfer Switch (circuit breaker type) Schematic	1
1-2	Vertical Design Automatic Transfer Switch Equipment with Deadfront Cover in Place over Power Panel (225-1000 Amperes)	2
3-1	Typical Power Panel (Unmounted) for 225-1000A Models	5
3-2	Typical Power Panel for 30-150A Models	6
3-3	Mounted Molded Case Switches with the Transfer Mechanism Removed for Clarity (225-1000A Models)	6
3-4	Vertical Design Voltage Selection Panel with Voltage Being Selected	6
3-5	Microprocessor-based Logic Control Panel	7
3-6	Device Panel on Front Cover	8
3-7	Typical Type 1 Enclosure (Door Closed)	9
4-1	Dimensions of Enclosed Automatic Transfer Switch and Approximate Weights	12
4-2	Typical (30-150 Amperes) Horizontal Design Transfer Switch Equipment (Door Open)	13
4-3	Typical (225-1000 Amperes) Vertical Design Transfer Switch Equipment (Door Open and Deadfront Shield Removed)	14
4-4	Mounted Load Lug Assembly (225-10 00A Models)	15
4-5	Line Voltage Plug and Receptacles (shown with covers removed) for Horizontal Design	18
5-1	Motor Disconnect Being Unplugged	19
5-2	Transfer Switch Manula Operating Handle in Use (225-1000A Models)	19
5-3	Indicator Wheel Mounted in the Switch with Motor Under the Wheel (225-1000A Models)	20
5-4	Indicator Wheel in Neutral Position (225-1000A Models)	20
5-5	Transfer Mechanism with Lever Removed (30-150A Model)	21
5-6	Switch Being Manually Operated (30-150A Model)	21
7-1	Plant Exerciser Timer	27
7-2	Genswitch Microprocessor-based Logic Control Panel	28
8-1	Wiring Diagram for AGswitch Automatic Transfer Switch	33

LIST OF TABLES

Table	Title	Page
1.1	Transfer Switch Catalog Number Explanation	3
3.1	Transfer Switch Equipment Enclosures	9
4.1	Bolted Bus Connection Torque Requirements	16
4.2	Transfer Switch Equipment Wire Sizes	17
7.1	Selection Grouping for DIP Switches	29
7.2	Parameters for Programming Undervoltage Pickup and Dropout for Normal Power Source	30
7.3	Parameters for Programming Undervoltage Pickup and Dropout for Emergency Power Source	30
7.4	Parameters for Programming Underfrequency Pickup and Dropout for Emergency Power Source	30
7.5	Range Selection for Time Delay Normal to Emergency (TDNE)	30
7.6	Range Selection for Time Delay Emergency to Normal (TDEN)	30
7.7	Range Selection for Time Delay Engine Cool Down (TDEC)	30
7.8	Quick Reference for Actual Voltage Level Relative to Percentage of the Normal System Voltage	31
8.1	Periodic Maintenance Procedures	34

Katolight Service - Master Repair Manual - Page 4083

SECTION 1: INTRODUCTION

1.1 PRELIMINARY COMMENTS AND SAFETY PRECAUTIONS

This technical document is intended to cover most aspects associated with the installation, application, operation and maintenance of the Genswitch with ratings from 30 through 800 amperes. It is provided as a guide for authorized and qualified personnel only. Please refer to the specific WARNING and CAUTION in Section 1.1.2 before proceeding. If further information is required by the purchaser regarding a particular installation, application or maintenance activity, a Cutler-Hammer representative should be contacted.

1.1.1 WARRANTY AND LIABILITY INFORMATION

No warranties, expressed or implied, including warranties of fitness for a particular purpose of merchantability, or warranties arising from course of dealing or usage of trade, are made regarding the information, recommendations and descriptions contained herein. In no event will Cutler-Hammer be responsible to the purchaser or user in contract, in tort (including negligence), strict liability or otherwise for any special, indirect, incidental or consequential damage or loss whatsoever, including but not limited to damage or loss of use of equipment, plant or power system, cost of capital, loss of power, additional expenses in the use of existing power facilities, or claims against the purchaser or user by its customers resulting from the use of the information and descriptions contained herein.

1.1.2 SAFETY PRECAUTIONS

All safety codes, safety standards and/or regulations must be strictly observed in the installation, operation and maintenance of this device.

WARNING

THE WARNINGS AND CAUTIONS INCLUDED AS PART OF THE PROCEDURAL STEPS IN THIS DOCUMENT ARE FOR PERSONNEL SAFETY AND PROTECTION OF EQUIPMENT FROM DAMAGE. AN EXAMPLE OF A TYPICAL WARNING LABEL HEADING IS SHOWN ABOVE TO FAMILIARIZE PERSONNEL WITH THE STYLE OF PRESENTATION. THIS WILL HELP TO INSURE THAT PERSONNEL ARE ALERT TO WARNINGS, WHICH APPEAR THROUGHOUT THE DOCUMENT. IN ADDITION, CAUTIONS ARE ALL UPPER CASE AND BOLDFACE.

CAUTION

COMPLETELY READ AND UNDERSTAND THE MATERIAL PRESENTED IN THIS DOCUMENT BEFORE ATTEMPTING INSTALLATION, OPERATION OR APPLICATION OF THE EQUIPMENT. IN ADDITION, ONLY QUALIFIED PERSONS SHOULD BE PERMITTED TO PERFORM ANY WORK ASSOCIATED WITH THE EQUIPMENT. ANY WIRING INSTRUCTIONS PRESENTED IN THIS DOCUMENT MUST BE FOLLOWED PRECISELY. FAILURE TO DO SO COULD CAUSE PERMANENT EQUIPMENT DAMAGE.

1.2 GENERAL INFORMATION

Transfer switches are used to protect critical electrical loads against loss of power. The load's normal power source is backed up by a secondary (emergency) power source. A transfer switch is connected to both the normal and emergency power sources and supplies the load with power from one of these two sources. In the event that power is lost from the normal power source, the transfer switch transfers the load to the secondary (emergency) power source. Transfer can be automatic or manual, depending upon the type of transfer switch equipment being used. Once normal power is restored,

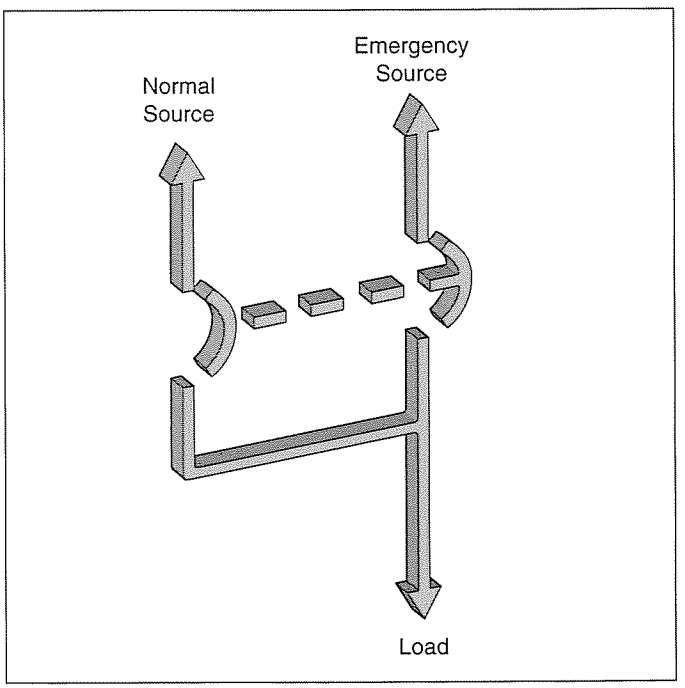

Figure 1-1 Typical Load Transfer Switch (circuit breaker type) Schematic

Katolight Service - Master Repair Manual - Page 4085

the load is automatically or manually transferred back to the normal power source, again depending upon the type of transfer equipment being used (Figure **1-1**).

In automatic transfer switch equipment, the switch's intelligence system initiates the transfer when normal power fails or falls below a preset voltage. If the emergency power source is a standby generator, the transfer switch initiates generator starting and transfers to the emergency power source when sufficient generator voltage is available. When normal power is restored, the transfer switch automatically transfers back and initiates engine shutdown. In the event the normal power source fails and the emergency power source does not appear, the automatic transfer switch remains connected to the normal power source until the emergency power source does appear. Conversely, if connected to the emergency power source and the emergency power source fails while the normal power source is still unavailable, the automatic transfer switch remains connected to the emergency power source.

Automatic transfer switches automatically perform the transfer function, and include three basic elements:

(1) Main contacts to connect and disconnect the load to and from the source of power.

(2) A mechanism to make the transfer of the main contacts from source to source.

(3) Intelligence/supervisory circuits to constantly monitor the condition of the power sources and thus provide the intelligence necessary for the switch and related circuit operation.

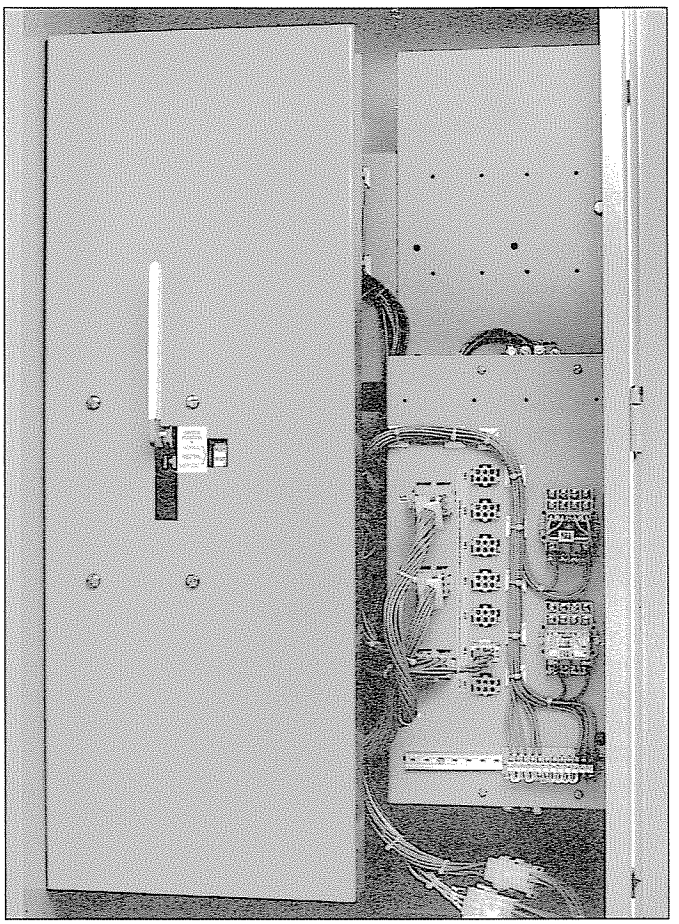

Figure 1-2 Vertical Design Automatic Transfer Switch Equipment with Deadfront Cover in Place Over Power Panel (225-1000 Amperes)

1.2.1 DESIGN CONFIGURATION

The Cutler-Hammer transfer switch is a rugged, compact design that used molded case switches to transfer essential loads from one power source to another (Figures **3-1** [225-1000A] and **3-2** [30-150A]). Molded case switches are interlocked to prevent both switching devices from being closed at the same time.

Molded case switches and the associated transfer mechanisms are mounted vertically to save space in the assembly. The compact, vertical configuration uses a positive, metallic transfer and interlocking system between the molded case switches.

The Cutler-Hammer automatic transfer switch was designed with easy installation and simplified maintenance in mind. Two main panels compromise the automatic transfer switch design:

- Power Panel
- Voltage selection and transformer panel
- Microprocessor-based logic panel

Each panel is independently mounted with interconnecting wiring terminated in connector plugs to permit individual door or panel removal without disturbing critical connections. Mounting the enclosure is simple using top and bottom mounting flanges with elongated mounting holes. These mounting holes, along with power panel positioning bolts and pre-tapped inserts insure proper power panel mounting after initial enclosure installation or when switching from top to bottom entry and vice versa. Refer to Section 4 for mounting and modification details.

Katolight Service - Master Repair Manual - Page 4086

1.3 TRANSFER SWITCH CATALOG NUMBER IDENTIFICATION

Transfer switch equipment catalog numbers provide a significant amount of relevant information that pertains to a particular piece of equipment. The Catalog Number Identification Table (Table **1.1**) provides the required interpretation information. An example is offered to initially simplify the process.

Example: Catalog Number *(circled numbers correspond to position headings in Table **1.1**)*:

① to ②	③	④	⑤ to ⑥	⑦	⑧	⑨ to ⑫	⑬	⑭	⑮
AT	**H**	**M**	**KD**	**A**	**3**	**0150**	**B**	**S**	**U**

The catalog number ATHMKDA30150BSU describes an Automatic Transfer Switch with the switching devices mounted horizontally in the enclosure. The intelligence represented by the control panel is solid state logic. The Cutler-Hammer Series C Type HKD is used as the switching device and is in the form of a 2-pole molded case switch on each source. The continuous current rating of this equipment is 225 amperes and applicable at 240VAC, 60Hz. The transfer switch equipment is enclosed in a NEMA 3R enclosure and is listed for UL applications.

Table 1.1 *Transfer Switch Catalog Number Explanation*

Positions 1-2		Position 3		Position 4		Positions 5-6		
Basic Device		**Switching Device Orientation**		**Control Panel**		**Switching Device**		
Automatic Transfer Switch	**AT**	Vertical	**V**①	Microprocessor	**M**	HFD	Cutler-Hammer Series C	**FD**
		Horizontal	**H**②			HKD	Cutler-Hammer Series C	**KD**
						HLD	Cutler-Hammer Series C	**LD**
						MA	Cutler-Hammer	**MA**
						NB	Cutler-Hammer	**NB**
						HND	Cutler-Hammer Series C	**ND**③

Position 7		Position 8		Positions 9-12		Position 13		Position 14		Position 15	
Switching Device Arrangement		**Number of Poles**		**Ampere Rating**		**Voltage/ Frequency**		**Enclosure**		**Listing**	
Fixed Mount Molded Case Switches Both Power Sources	**A**	Two	**2**	30A – **0030**		120VAC/60Hz	**A**	Type 1	**S**	UL Listed	**U**
				70A – **0070**		208VAC/60Hz	**B**	Type 12	**J**		
		Three	**3**	100A – **0100**		600VAC/60Hz	**E**	Type 3R	**R**		
				150A – **0150**		220VAC/50 or 60Hz	**G**				
		Four	**4**	225A – **0225**		380VAC/50Hz	**H**				
				300A – **0300**		600VAC/50Hz	**K**				
				400A – **0400**		230VAC/50Hz	**M**				
				600A – **0600**		401VAC/50Hz	**N**				
				800A – **0800**		415VAC/50Hz	**O**				
				1000A – **1000**		240VAC/60Hz	**W**				
						480VAC/60Hz	**X**				
						365VAC/50Hz	**Z**				

① Vertical orientation (225-1000 amperes)
② Horizontal orientation (30-150 amperes)
③ Contact factory for availability

Katolight Service - Master Repair Manual - Page 4087

SECTION 2: RECEIVING, HANDLING, AND STORAGE

2.1 RECEIVING

Every effort is made to ensure that the transfer switch equipment arrives at its destination undamaged and ready for installation. Packing is designed to protect internal components as well as the enclosure. Care should be exercised, however, to protect the equipment from impact at all times. Do not remove protective packaging until the equipment is ready for installation .

When transfer switch equipment reaches its destination, the customer should inspect the shipping container for any obvious signs of rough handling and/ or external damage that occurred during transportation. Record any external and internal damage for reporting to the transportation carrier and Cutler-Hammer, once a thorough inspection is complete. All claims should be as specific as possible and include Shop Order and General Order numbers.

A shipping label affixed to the shipping container includes a variety of equipment and customer information, such as General Order number and Customer Number. Make certain that this information matches other shipping paper information.

Each transfer switch enclosure is bolted through its top and bottom mounting flanges to a rigid wooden pallet. The pallet is open at two ends for movement by a forklift. Heavy duty cardboard sides surround the enclosure and are further supported with reinforced cardboard corner posts. An egg crate design cardboard protector covers the entire top of the enclosure with additional cardboard protectors over the indicating light panel and operating handle. A heavy duty cardboard lid covers the entire opening. The shipment is secured and further protected with shrink wrap. Do not discard the packing material until the equipment is ready for installation.

Once the top packaging is removed from the shipment, the enclosure door can be opened. A plastic bag of documents will be found in the enclosure, usually attached to the inside of the door. Important documents, such as test reports, wiring diagrams, appropriate instruction leaflets and a warranty registration card, are enclosed within the bag and should be filed in a safe place.

2.2 HANDLING

As previously mentioned, transfer switch equipment is packaged for forklift movement. Protect the equipment from impact at all times and do not double stack. Once the equipment is in the installation location and ready to be installed, packaging material can be removed. Once the enclosure is unbolted from the wooden pallet, it can be hand moved to its installation position. Be careful not to damage the top or bottom enclosure mounting flanges. Refer to Section 4 of this manual for specific installation instructions.

2.3 STORAGE

Although well packaged, this equipment is not suitable for storage outdoors. The equipment warranty will not be applicable if there is evidence of outdoor storage. If the equipment is to be stored indoors for any period of time, it should be stored with its protective packaging material in place. Protect the equipment at all times from excessive moisture, construction dirt, corrosive conditions, and other contaminants. It is strongly suggested that the package-protected equipment be stored in a climate-controlled environment of -20°C to 65°C with a relative humidity of 80 percent or less. Do not under any circumstance, stack other equipment on top of a transfer switch equipment enclosure, whether packaged or not.

SECTION 3: EQUIPMENT DESCRIPTION

3.1 GENERAL

The Genswitch consists of three basic panels interconnected via connector plugs and mounted in an enclosure (Figures **4-2** and **4-3**).

3.2 POWER PANEL

The power panel is used for making load, power, and neutral connections. The main contacts and the transfer mechanism are all on one steel frame (Figure **3-1** and **3-2**).

3.2.1 STEEL BASE PLATE

The steel base plate design (225-1000 A models only) permits the power panel to be moved vertically within the enclosure to accommodate top or bottom cable entry (Figure **4-1**). Elongated holes on either side of the base plate ensure proper positioning. The bottom set of elongated holes positions the power panel higher in the enclosure, thus permitting bottom cable entry. The top set of elongated holes positions the power panel lower in the enclosure for top cable entry. Section 4 discusses equipment mounting and load lug location in detail.

3.2.2 MAIN CONTACTS

The main contacts connect and disconnect the load to and from the different power sources. High withstand molded case switches are the main contacts for the normal and emergency power sources in standard Genswitch automatic transfer switches (Figure **3-3** and Section **3.7**). These continuous duty transfer switches are rated for all classes of loads, open or enclosed.

In addition, they have high dielectric strength, heavy-duty switching and withstand capabilities, and high interruption capacity. This transfer switch incorporates Cutler-Hammer-type molded case switches.

The switching devices are mechanically and electrically interlocked to prevent the two sets of main contacts from being closed simultaneously. The load side contacts of each switching device are joined with a bus bar assembly to form a common load terminal location, either top or bottom (Figures **4-2** and **4-3**).

3.2.3 TRANSFER MECHANISM (225-1000A)

The transfer mechanism transfers between power sources through a motor-driven, ratchet-type operation. A rotational motion is created on an indicator wheel by the ratchet's operation. The indicator wheel is attached to rigid shafts which convert the rotary motion into vertical linear motion. Opening and closing the switching devices is accomplished as a result of this vertical linear motion. The transfer mechanism is mounted in front of the molded case switches (Figure **3-1**).

A solid steel shield attached to the ratchet assembly permits viewing of the rotary switch position indicator while restricting access to other parts of the power panel (Figure **1-2**).

3.2.4 TRANSFER MECHANISM (30-150A)

This mechanism transfers between power sources using a motor-driven arm that connects to a lever which operates both the normal and emergency switches (Figure **3-2**).

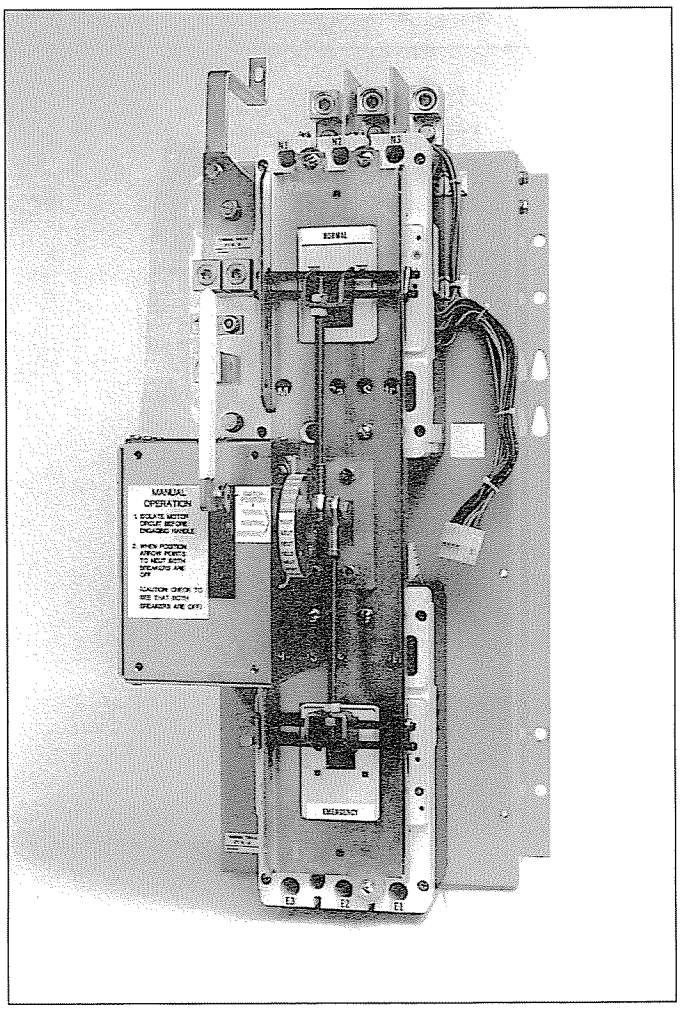

Figure 3-1 Typical Power Panel (Unmounted) for 225-1000A Models

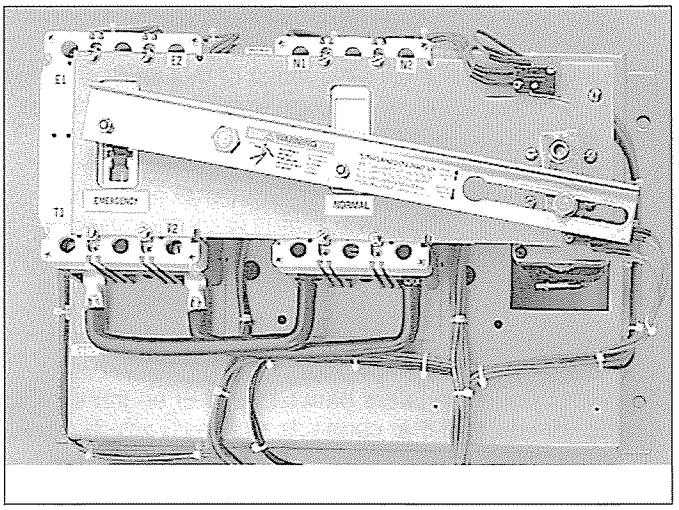

Figure 3-2 Typical Power Panel for 30-150A Models

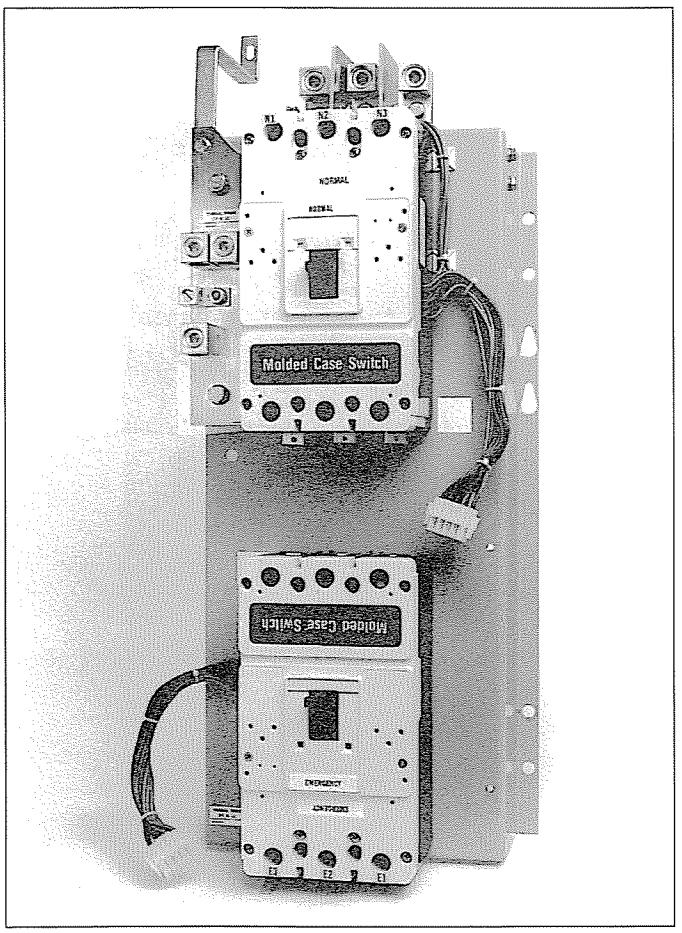

Figure 3-3 Mounted Molded Case Switches with the Transfer Mechanism Removed for Clarity (225-1000A Models)

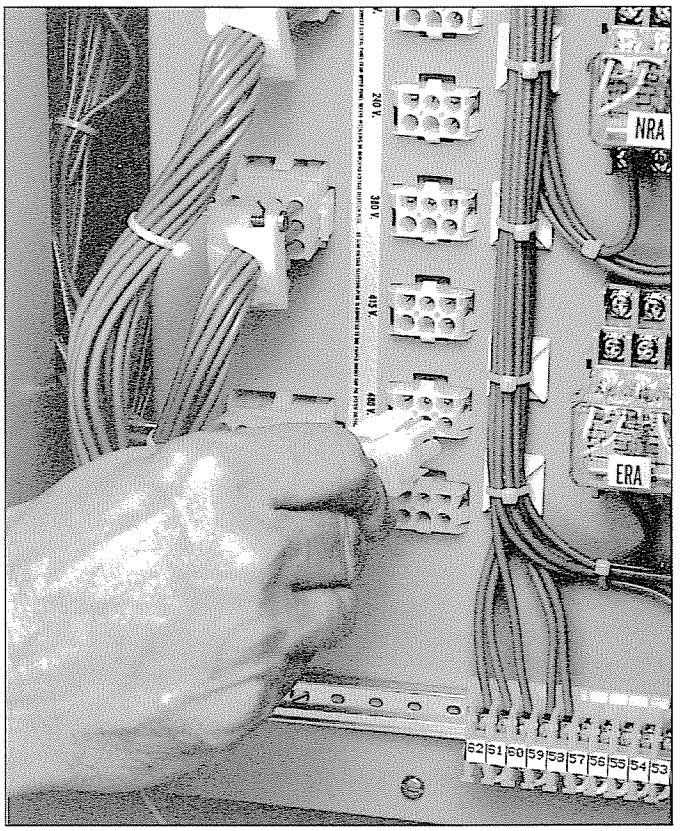

Figure 3-4 Vertical Design Voltage Selection Panel with Voltage Being Selected

3.3 VOLTAGE SELECTION PANEL

The voltage selection panel is a multi-tap enclosed transformer mounted in the enclosure (Figure **3-4**). Seven front accessible voltages taps from 208 to 600 volts AC satisfy any required application voltage. A quick change capability from one voltage to another is provided by a small disconnect plug.

3.4 MICROPROCESSOR BASED LOGIC PANEL

The Genswitch is a microprocessor-based transfer switch logic control package. The hardware and software of the controller contain the intelligence/supervisory circuits that constantly monitor the condition of the power sources. It provides the intelligence necessary for the operation of the transfer switch (Figure **3-5**).

The ATS controller has an operating temperature of -20 to 75° C.

The Controller circuit board is protected by an insulating conformal coating.

Katolight Service - Master Repair Manual - Page 4090

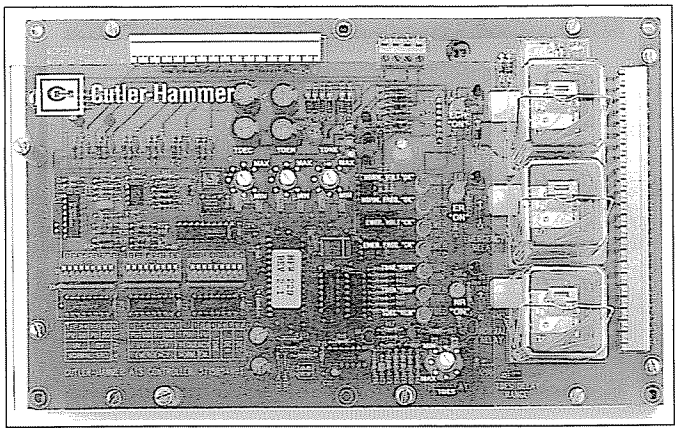

Figure 3-5 Microprocessor-based Logic Control Panel

The specifications under normal operating conditions are as follows:

- Tolerance for voltage sensing function: ±2% of setting
- Tolerance for frequency sensing function: ±0.2 Hz of setting
- Accuracy of time delay range: ±2% of setting
- Dial settings for delay time: ±5% of indication

3.5 OPTIONS

A variety of switch options are available to meet a wide variety of application requirements. Individual options or option combinations permit a switch to be tailored to individual needs. Options are numbered with an associated description. More detailed selections that must be made within a specific option are lettered.

1. Time Delay Normal to Emergency (TDNE) (Standard)

This option delays the transfer from the normal power source to the emergency power source in order to override momentary normal power source outages and/or fluctuations. Timing begins when the emergency power source becomes available. It does not affect initiation of the engine start circuit. Should the normal power source fail, the engine start contact will immediately close, and if connected to an engine generator, will initiate an engine start-up. The timer is user-adjustable over four ranges covering 0.1 seconds to 200 minutes. **This option is labeled TDNE and is located on the microprocessor control panel. See Section 7.3 for further details on settings.**

2. Time Delay on Engine Starting (TDES) (Standard)

This option is used only where the emergency power source is an engine generator. It delays initiation of the engine start circuit in order to override momentary normal power source outages and/or fluctuations. It does not affect the transfer switch's ability to transfer from normal power source to the emergency power source. The timer is user adjustable over two ranges covering 0.5 seconds to 15 seconds. **This option is labeled TDES and is located on the microprocessor control panel. See Section 7.3 for further details on settings.**

2B. Adjustable 0 to 20 or 20 to 40 seconds

3. Time Delay Emergency to Normal (TDEN) (Standard)

This option delays the transfer from the emergency power source to the normal power source, allowing for stabilization of the normal power source before the transfer is initiated. Timing begins when the normal source becomes available. If the emergency power source fails during timing, the time delay is overridden and an immediate transfer to the normal power source will occur. The timer is user-adjustable over 4 ranges covering 0.1 seconds to 200 minutes. **This option is labeled TDEN and is located on the microprocessor control panel. See Section 7.3 for further details on settings.**

4. Time Delay for Engine Cool-Off (TDEC) (Standard)

This option enables the generator to run under a no-load condition after transfer to the normal power source has been made. Timing begins immediately after the transfer has been made. The timer is user adjustable over four ranges covering 0.1 seconds to 200 minutes. **This option is labeled TDEC and is located on the microprocessor control panel. See Section 7.3 for further details on settings.**

5. Frequency/Voltage Sensing for Emergency Source (Standard)

This option enables the microprocessor to constantly monitor the emergency power source. The microprocessor prevents transfer from normal power source to the emergency power source until the emergency power source has reached an acceptable operating frequency and/or voltage. When the transfer switch is connected to the emergency power source and the emergency power source is outside the microprocessor frequency or voltage settings, the transfer switch will initiate a transfer to the normal power source, if the normal power source is available.

5B. 1-Phase Undervoltage/Under Frequency

12. Pilot Lights (Standard)

Transfer Switch Position

12C. Normal (Green)

Illuminates when the normal power source is available and the transfer switch is connected to the normal source.

12.D Emergency (Red)

Illuminates when the emergency power source is available and the transfer switch is connected to the emergency power source.

14. Auxiliary Relay Contact (Standard)

14C. Normal Power Source

This option provides two NO and two NC contacts. The relay is energized only when the normal power source is available and the transfer switch is connected to the normal power source. **This option is labeled as NRA and is mounted on the voltage selection panel.**

14D. Emergency Power Source

This option provides 2 NO and 2 NC contacts. The relay is energized when the emergency power source is available. **This option is labeled ERA and is mounted on the voltage selection panel.**

16. Integral Overcurrent Protection (Optional)

Use of the option can, in many cases, eliminate the need for separate upstream, overcurrent/short circuit protection and provide significant material, labor, and space savings over other system layouts. In addition to overcurrent protection, for safety purposes, selection of this optional accessory also includes a lock-out function that prevents further automatic transfer operation until the appropriate source is manually reset. (Note: Supplied with Option 37A).

- 16B. Provides overcurrent protection on both power source supplies.
- 16N. Provides overcurrent protection on the normal power source supply only.

23. Plant Exerciser (Standard)

- 23G. This option allows for automatic testing of the generator at least once a week. Both load and no-load testing can be selected. If the generator fails while in a load test, the transfer switch will return to the normal source only after a preprogrammed exerciser period has elapsed. **The plant exerciser is mounted on the intelligence panel and is marked PE (Figure 3-6).**
- 23J. This option allows for automatic testing of the generator at least once a week. Both load and no load testing can be selected. If the generator fails while in a load test the transfer switch will return to the normal power source automatically. **The plant exerciser is mounted on the intelligence panel and is marked PE.**

26. Type of Protection (Normal Source)(Standard)

All phase undervoltage protection is standard. A voltage sensing card monitors each phase of the normal power supply, and is normally set at 80% dropout and 90% pickup.

26D. Remote Interruptible Utility Power (Standard)

This option provides two terminal blocks for connection of a customer provided normally closed (NC) contact. When the NC contact is opened, the transfer switch initiates an engine start and will transfer the load to the emergency power source. Reclosing of a NC contact will initiate a retransfer back to the normal power source.

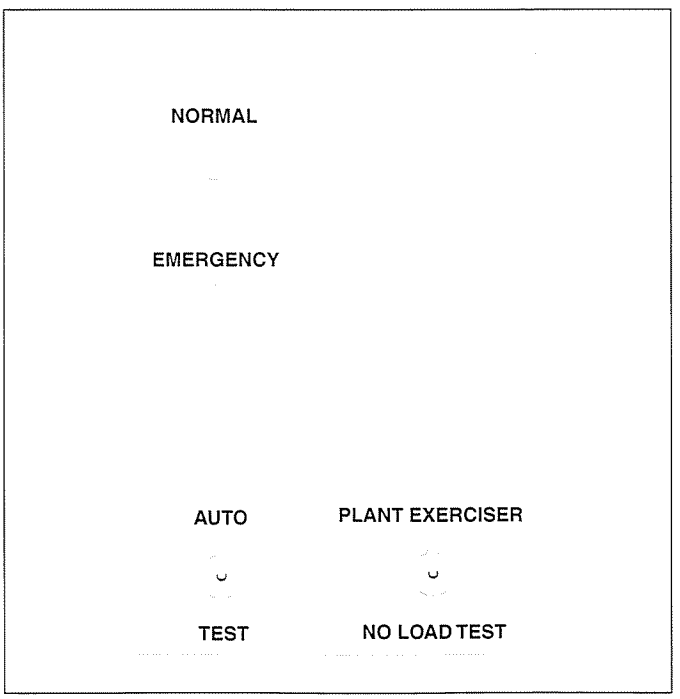

Figure 3-6 Device Panel on Front Cover

Katolight Service - Master Repair Manual - Page 4092

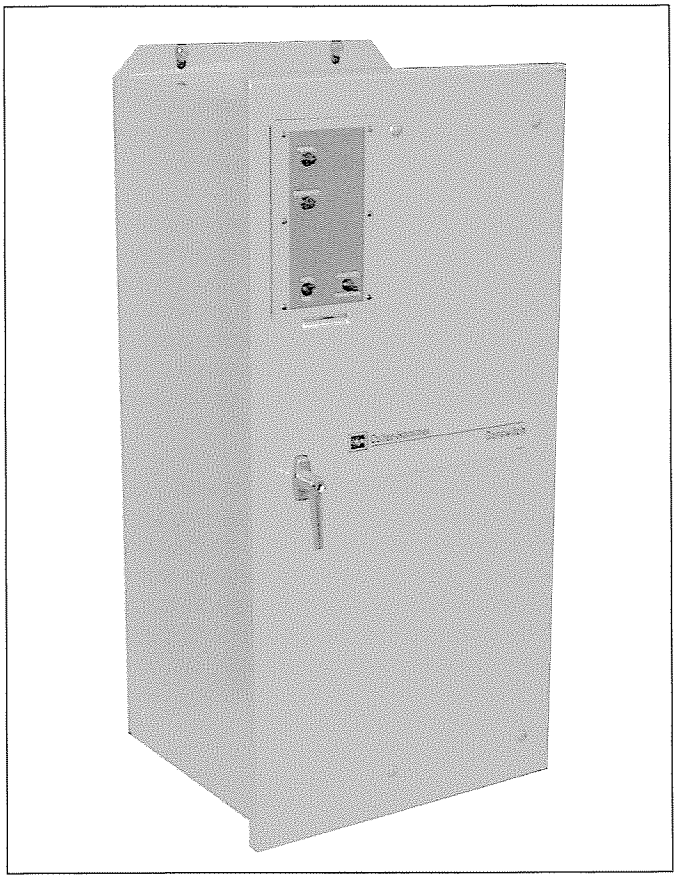

Figure 3-7 Typical Type 1 Enclosure (Door Closed)

32A.Delayed Transition Timer (Time Delay Neutral) (Standard)

Provides a time delay in the neutral (both OFF) position when the load is transferred in either direction to prevent excessive inrush currents due to out-of-phase switching of large motor loads. It utilizes a normally open auxiliary contact. Adjustment is from 0.5 to 60 seconds. **This option is labeled TDNL and is located above the transformer.**

35A. Pre-Transfer Signal Device (Optional)

Provides a set of two NO/NC form "C" contacts to allow loads to be de-energized prior to transfer in either direction. Typically used in conjunction with elevator controls. This option is labled PSDR and PSDT.

The PSDR is located on the voltage selection panel and the PSDT is located on the transformer panel.

3.6 ENCLOSURE

The rugged steel switch enclosure is supplied with three door hinges, regardless of enclosure size, th ensure proper support of the door and door mounted devices (Figures **3-7** and **4-1**). The hinges have removable hinge pins to facilitate door removal. Certain procedures, such as switch mounting, are simplified with the door removed. The doors are supplied as standard with a key-lockable handle.

The door is used to mount a variety of lights, switches and push-buttons, depending upon the options required for a particular switch. All switch doors are supplied with a metal accessory panel. All lights and switches are mounted in the metal door-mounted panel.

The rear of the enclosure is supplied with teardrop shaped holes in the top and bottom mounting flanges to facilitate mounting. It is also supplied with two positioning bolts and various pre-tapped inserts to insure proper positioning of the power panel anytime the power panel must be repositioned to accommodate a different cable entry position. Cable entry holes are the responsibility of the customer.

Transfer switch enclosures and all internal steel mounting plates, such as the power panel mounting plate, go through a pretreatment cleaning system prior to painting to ensure a durable finish.

The standard switch enclosure is NEMA Type 1 for general indoor use. A variety of enclosures are however, available to address almost any environmental circumstance (Table **3.1**).

Table 3.1 Transfer Switch Equipment Enclosures

NEMA TYPE	DESIGN	PROTECTION
1	Indoor	Enclosed Equipment
3R	Outdoor	Rain, ice Formation
12	Indoor	Dust, Dirt and Non-Corrosive Liquids

Katolight Service - Master Repair Manual - Page 4093

3.7 STANDARDS

Cutler-Hammer transfer switch equipment enclosed in a NEMA 1 enclosure is listed for application by UL and UL-C. In addition, Cutler-Hammer automatic transfer switches are listed in File E38116 by Underwriters Laboratories, Inc. under Standard UL 1008. This standard covers requirements for automatic transfer switches intended for use in ordinary locations to provide lighting and power as follows:

a. In emergency systems, in accordance with articles 517 and 700 in the National Electrical Code, ANSI/NFPA 70 and the National Fire Protection Association No. 76A and/or

b. In standby systems, in accordance with article 702 of the National Electrical Code and/or

c. In legally required standby systems in accordance with article 701 of the National Electrical Code.

Cutler-Hammer automatic transfer switches are available to meet NFPA110 for emergency and standby power systems, and NFPA99 for health care facilities when ordered with the appropriate options.

Since Cutler-Hammer automatic transfer switches use specially designed molded case switches as the main power switching contacts, these devices must also be listed under the additional UL Standards 1087. Underwriters Laboratories uses two basic types of listing programs - label service and reexamination.

UL1087 employs a label service listing program which requires an extensive follow-up testing program for listed devices. Standard UL1008 for automatic transfer switches lists devices under the reexamination program which only requires a continual physical reexamination of the components used h the product to ensure consistency with the originally submitted device. Follow-up testing *is not* required by UL1008.

Representative production samples of molded case switches and molded case circuit breakers used in Cutler-Hammer automatic transfer switches are subjected to a complete test program identical to the originally submitted devices on an ongoing periodic basis per UL1087. The frequency of such a re-submittal can be as often as every quarter for a low ampere device.

Katolight Service - Master Repair Manual - Page 4094

SECTION 4: INSTALLATION AND WIRING

4.1 GENERAL

Transfer switches are factory wired and tested. Installation requires solidly mounting the enclosed unit and connecting power cables and auxiliary pilot circuits. Physical mounting procedures and power cable connections are covered in this section. All other required wiring or electrical connection references are covered in a separate Customer Wiring Booklet packed with the transfer switch. Locate the wiring booklet, review it, and keep it readily available for reference purposes during installation and testing. Once a transfer switch is properly installed and wired, it should be mechanically and electrically checked for proper installation and operation. The procedures for these initial mechanical and electrical checks are outlined in Section 6 of this instruction manual.

NOTICE

To facilitate the procedures described in this section, the solid steel shield over the power panel should be removed. The shield is attached to the ratchet assembly with four screws. Remove the four screws and shield until the procedures are completed.

WARNING

BE CERTAIN THAT THE SOLID STEEL POWER PANEL SHIELD IS PROPERLY INSTALLED BEFORE TRANSFER SWITCH EQUIPMENT IS PUT INTO SERVICE.THE SHIELD PROVIDES PROTECTION FROM DANGEROUS VOLTAGES AT THE LINE AND LOAD TERMINALS WHEN THE EQUIPMENT IS IN OPERATION. FAILURE TO DO SO COULD RESULT IN PERSONAL INJURY OR DEATH.

4.2 MOUNTING LOCATION

Choose a location that offers a flat, rigid mounting surface capable of supporting the weight of the enclosed transfer switch equipment (Figure **4-1**). Avoid locations that are moist, hot, or dusty, however, there are enclosure designs available for special environments. If there are any doubts as to location suitability, discuss them with your Cutler-Hammer representative.

Check to make certain that there are no pipes, wires, or other mounting hazards in the immediate mounting area that could create a problem.

Carefully remove all packing material from the transfer switch at the mounting location. Even though an equipment inspection was made when the equipment was received, make another careful inspection of the enclosure and the enclosed transfer switch as packing material is removed and the enclosure readied for mounting. Be especially alert for distorted metal, loose wires or damaged components.

4.3 MOUNTING PROCEDURE

CAUTION

SINCE THE ENCLOSED TRANSFER SWITCH MUST BE LIFTED INTO PLACE FOR MOUNTING, BE CERTAIN THAT ADEQUATE RESOURCES ARE AVAILABLE FOR LIFTING TO AVOID PERSONNEL INJURIES OR EQUIPMENT DAMAGE.

Refer to Figures **4-1** for enclosure and power panel mounting dimension references. All vertical design transfer switch equipment enclosures and power panels are of the same design. Only the overall physical dimensions change. Note in Figure **4-1** that the enclosure is provided with four elongated mounting holes, two in the top mounting flange and two in the bottom. Also notice that the power panel has two sets of mounting holes. One set positions the panel for top entry of cables and one set for bottom entry. This will be covered in more detail in Section **4.4**

Transfer switch equipment is assembled and supplied as standard for top entry, although equally adaptable to bottom entry. Cable entry holes are not part of the enclosure when shipped from the factory and must be provided in the field, either before or after mounting the enclosure.

CAUTION

EXTREME CARE SHOULD BE TAKEN TO PROTECT THE TRANSFER SWITCH FROM DRILL CHIPS, FILINGS AND OTHER CONTAMINANTS WHEN MAKING THE CABLE ENTRY HOLES AND MOUNTING THE ENCLOSURE TO PREVENT COMPONENT DAMAGE OR A FUTURE MALFUNCTION.

Katolight Service - Master Repair Manual - Page 4095

Power Panel Type	A	B	C	Weights
FD 30-200A	44" (1.18m)	21" (0.53m)	18.13" (0.47)	195 lbs (88kg)
KD 225A	44" (1.18m)	21" (0.53m)	19.63" (0.50m)	380 lbs (172kg)
KD 300A	52" (1.32m)	21" (0.53m)	19.63" (0.50m)	380 lbs (172kg)
LD 400A	61" (1.55m)	26" (0.66m)	20.63" (0.52m)	430 lbs (195kg)
MA 600A	73" (1.85m)	26" (0.66m)	20.63" (0.52m)	525 lbs (238kg)
NB/ND 800A	79" (2.01m)	26" (0.66m)	20.63" (0.52m)	610 lbs (275kg)

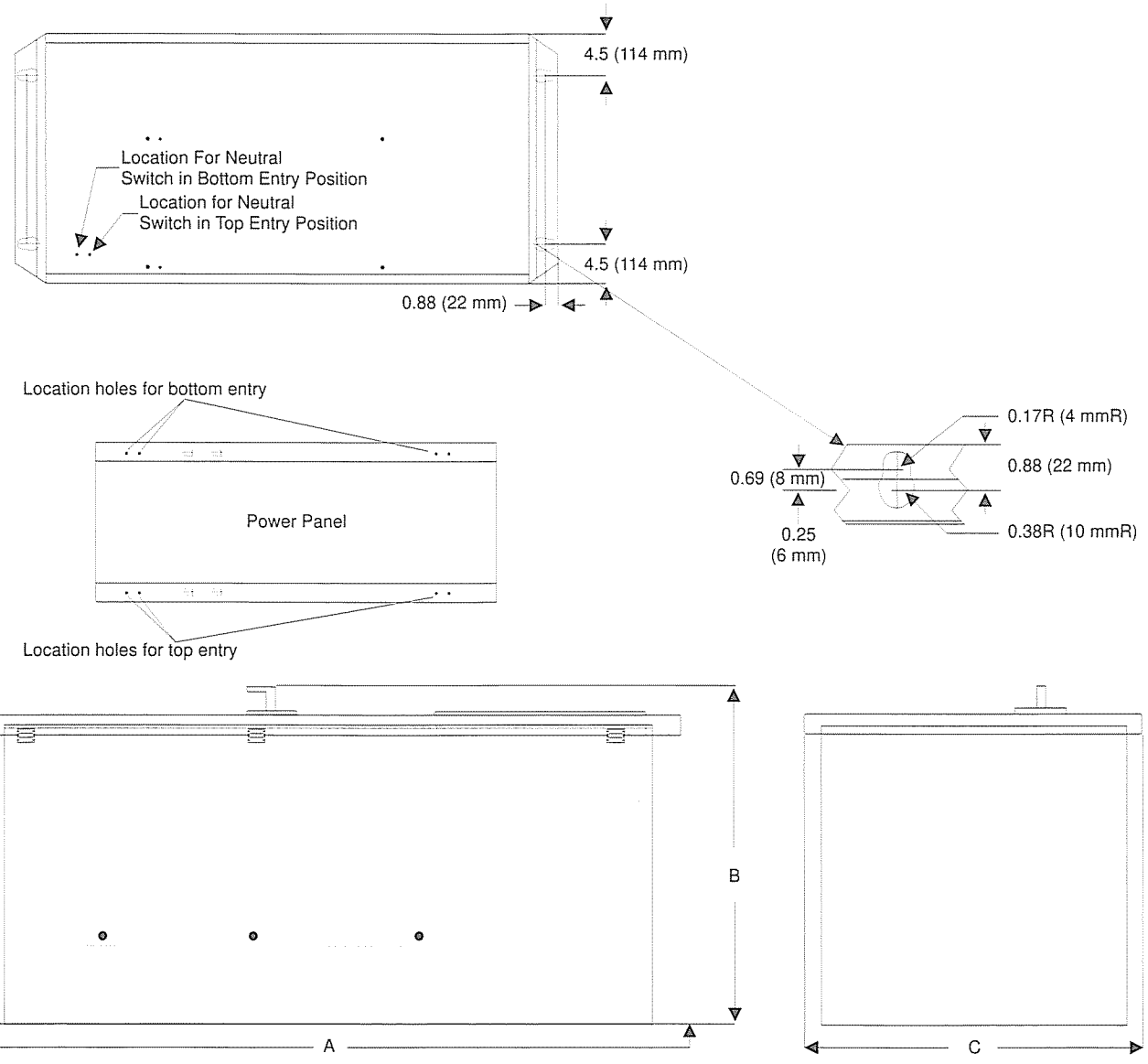

Figure 4-1 DImensions of Enclosed Automatic Transfer Switch and Approximate Weights

Katolight Service - Master Repair Manual - Page 4096

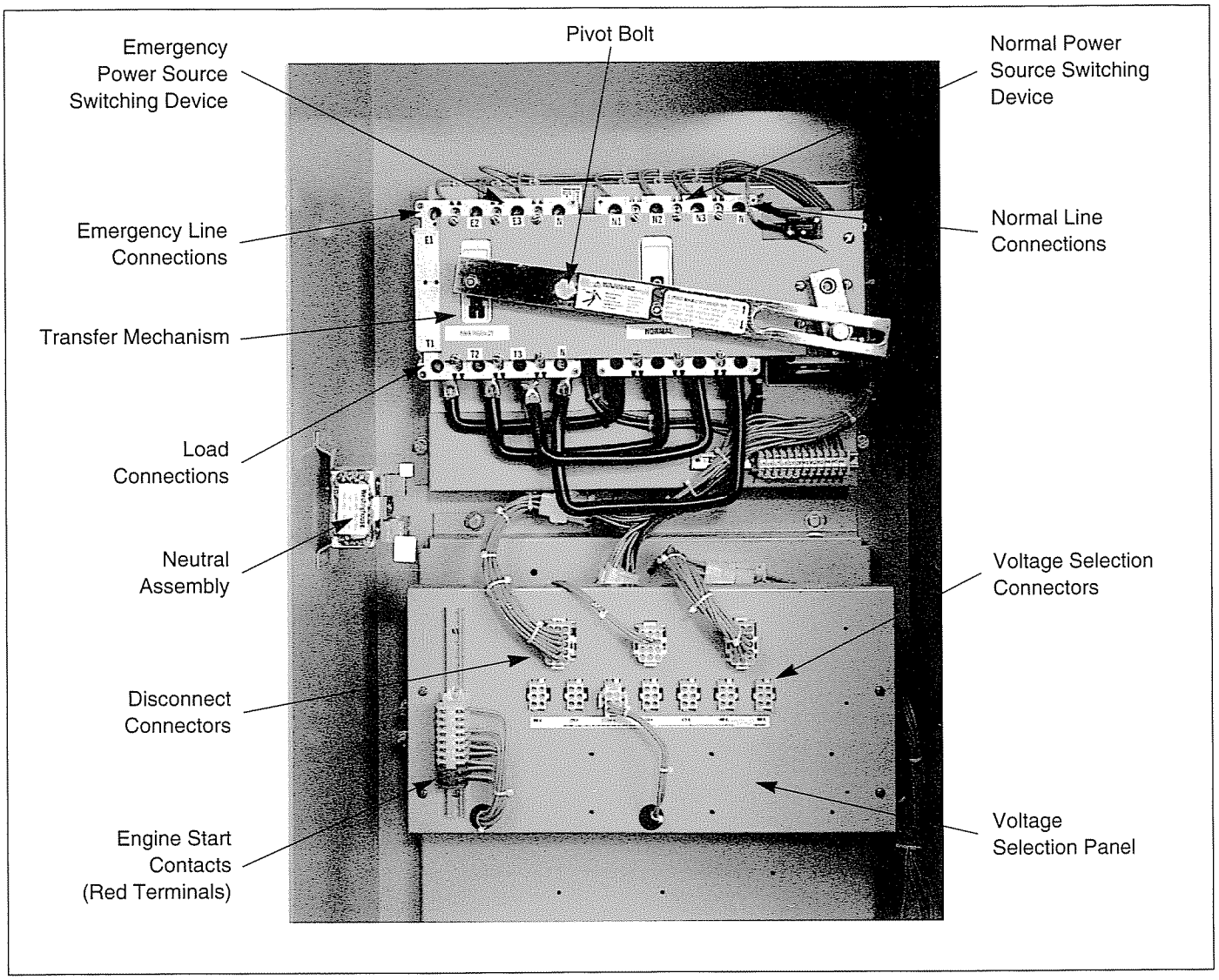

Figure 4-2 Typical (30-150 Amperes) Horizontal Design Transfer Switch Equipment (Door Open)

With the enclosed transfer switch equipment unpacked and ready for mounting, proceed with these steps:

Step 1: The transfer switch enclosure door is hinge mounted with removable hinge pins. To simplify the mounting procedure and avoid damaging the door-mounted logic panel, carefully remove the door and put it in a safe place until mounting is complete.

Step 2: Install required mounting bolt anchors and the two upper mounting bolts in the mounting surface.

Step 3: Gently lift the enclosure and guide the elongated holes in the upper mounting flange over the upper mounting bolts, but do not completely tighten the bolts.

Step 4: While still supporting the enclosure, install the two lower mounting bolts in the lower mounting flange, but do not completely tighten. Use shims, if required, to prevent deformation of the enclosure when the mounting surface is distorted.

Step 5: Tighten all four mounting bolts after any required shimming is completed.

Katolight Service - Master Repair Manual - Page 4097

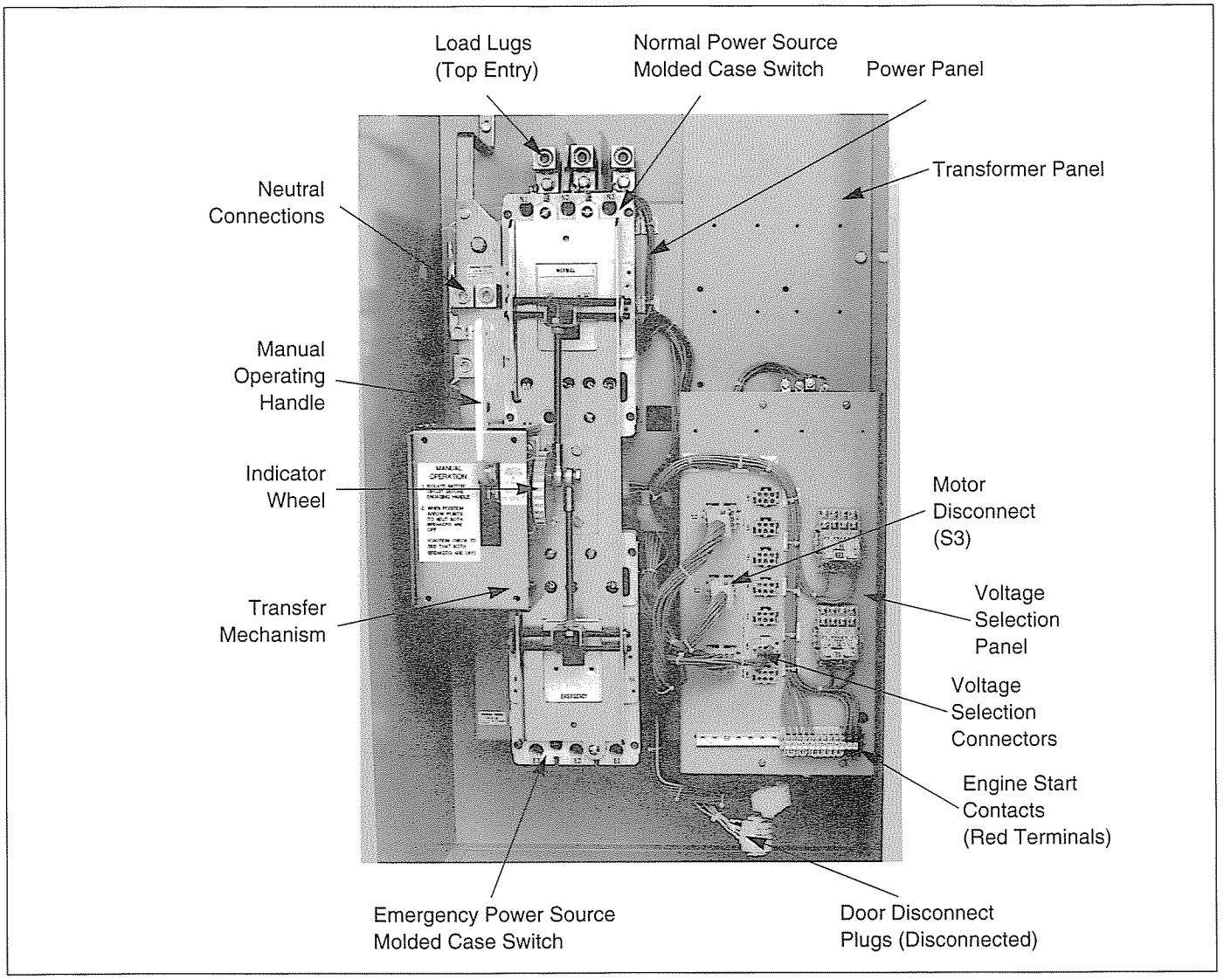

Figure 4-3 Typical (225-1000 Amperes) Vertical Design Transfer Switch Equipment (Door Open and Deadfront Shield Removed)

Step 6: Double check to ensure that all packing and shipping material has been removed.

4.4 LOAD LUG LOCATION

This section applies only to the 225-1000A switches. The load lugs for the 30-150A switch are fixed.

Transfer switch equipment is supplied as standard from the factory with load terminal lugs at the top. If the load lugs are to be repositioned to the bottom, do it at this time before wiring the unit or making power cable connections.

WARNING

IF THE LOAD LUG LOCATION IS BEING CHANGED ON ALREADY INSTALLED TRANSFER SWITCH EQUIPMENT, MAKE SURE THAT THE NORMAL, EMERGENCY AND OTHER POWER SOURCES CONNECTED TO THE EQUIPMENT ARE DE-ENERGIZED. HAZARDOUS VOLTAGES ARE PRESENT INSIDE TRANSFER SWITCH EQUIPMENT AND CAN CAUSE SEVERE PERSONAL INJURY OR DEATH.

With the solid steel shield removed, proceed with the following steps for bottom feed load termination.

Step 1: Disconnect the power panel from the rest of the transfer switch by unplugging the connector plugs (P1, P2, and P3) (Figures **4-3**).

Step 2: Remove the bolt that bonds the neutral strap to the rear of the enclosure, if it is in place.

Step 3: Remove the four bolts that secure the power panel in the enclosure. Depending upon the size of the panel, it may be advisable to have assistance with the removal. Once the power panel is free, carefully move it to a solid work surface (Figure **3-3**).

NOTICE

At this point, take the time to refer to Figure 4-1 and become familiar with the inside rear of the enclosure and the power panel mounting provisions available for both top and bottom entry. It will facilitate reinstallation of the power panel.

Step 4: Remove the operating mechanism from the front of the power panel by removing the six bolts holding the mechanism in position. The molded case switches or optional circuit breakers do not have to be removed (Figure **3-3**).

NOTICE

The rear-mounted load lugs, dip-insulated bus bars, standoff insulators, glass polyester phase barriers, and metal mounting bracket are designed to be removed as one load lug assembly (Figure 4-4).

Step 5: The load lug assembly, just mentioned, is removed by first removing the six or eight bolts securing the pieces of insulated bus to the back of the power panel. The number of mounting bolts depends upon whether 3- or 4-pole devices are installed. Mounting bolts are accessed through holes in the load end of the molded case switches or optional circuit breakers.

Step 6: Next, remove the four bolts holding the mounting bracket to the upper rear portion of the power panel. The load lug assembly can now be removed as one unit. Note that there are grooves in the back of the power panel and in the mounting bracket that keep the polyester phase barriers in their proper positions.

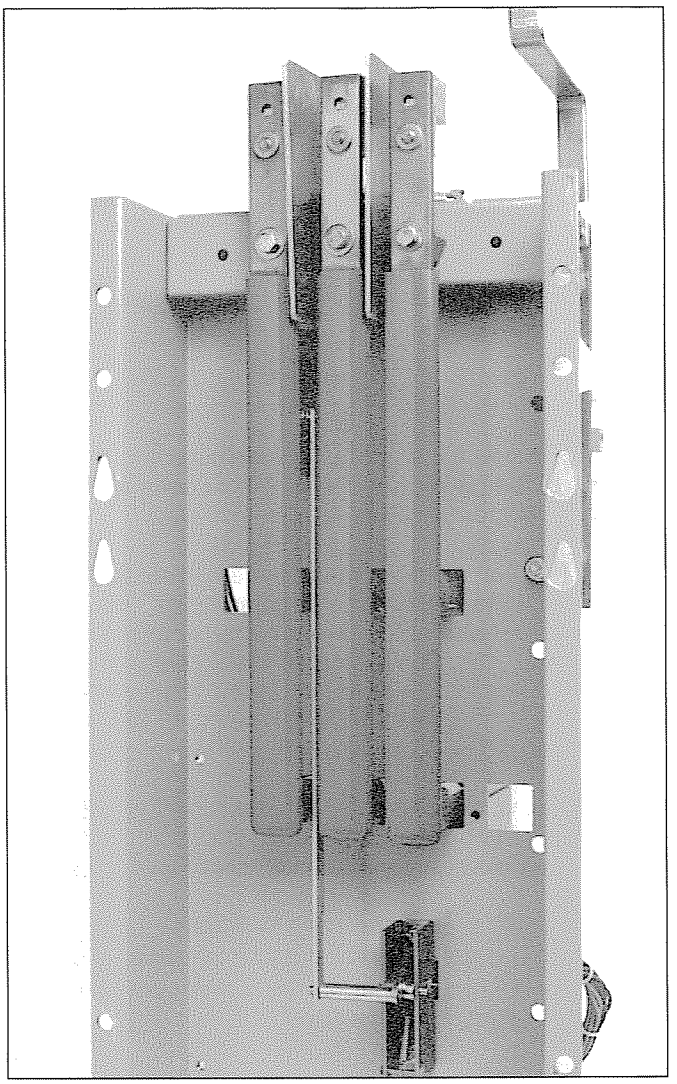

Figure 4-4 Mounted Load Lug Assembly (225-1000A Models)

Step 7: Turn the load lug assembly 180° with the lugs at the bottom and remount the assembly by reversing the procedures described in Steps 5 and 6. The mounting bracket will now be bolted to the bottom of the power panel. Make certain that all glass polyester phase barriers are in place and positioned properly in the grooves provided. When making any bolted connection to the bus, comply with the torque requirements as outlined in Table **4.1**.

Katolight Service - Master Repair Manual - Page 4099

Table 4.1 Bolted Bus Connection Torque Requirements

Power Panel Switching Device	Torque ft-lb (Nm)
Type FD	10 (14)
Type KD	20 (27)
Type LD	25 (34)
Type MA	25 (34)
Type ND	25 (34)
Type NB	25 (34)

Step 8: Remount the operating mechanism to the front of the power panel with the six bolts removed previously in Step 4.

Step 9: Position the power panel in the enclosure such that the two upper elongated holes, one on either side of the power panel, fit over the two positioning bolts located in the rear of the enclosure. This will line up the four correct mounting holes in the power panel with the pre-tapped inserts in the rear of the enclosure.

Step 10: With the power panel held securely against the back of the enclosure, replace and tighten the four mounting bolts removed previously in Step 3.

Step 11: Attach the neutral strap to the back of the enclosure through the upper bonding hole, which may or may not have been previously removed in Step 2.

Step 12: Reconnect the connector plugs and the transfer switch equipment is now configured for bottom entry.

4.5 POWER CABLE CONNECTIONS

WARNING

POWER CONDUCTORS MAY HAVE VOLTAGE PRESENT THAT CAN CAUSE SEVERE PERSONAL INJURY OR DEATH. DE-ENERGIZE ALL POWER OR CONTROL CIRCUIT CONDUCTORS TO BE CONNECTED TO THE TRANSFER SWITCH EQUIPMENT BEFORE BEGINNING TO WORK WITH THE CONDUCTORS AND/OR TERMINATING THEM TO THE EQUIPMENT.

CAUTION

USE OF CABLE LUGS NOT DESIGNED FOR THE TRANSFER SWITCH MAY CAUSE HEATING PROBLEMS. BREAKER LUGS ONLY MOUNT TO THE BREAKER,WHILE TRANSFER SWITCH LUGS MOUNT TO BOTH THE BREAKER AND THE BUS BAR BEHIND THE BREAKER. FOR INSTALLATION INSTRUCTIONS, REFER TO THE INSTRUCTION LEAFLET SUPPLIED FOR THE SPECIFIC LUGS.

CAUTION

TO HELP PREVENT COMPONENT DAMAGE OR FUTURE MALFUNCTIONS, USE EXTREME CARE TO KEEP CONTAMINANTS OUT OF THE TRANSFER SWITCH EQUIPMENT WHEN MAKING POWER CABLE CONNECTIONS.

CAUTION

RUN POWER CABLE THROUGH THE GUTTER SPACE PROVIDED TO THE RIGHT OF POWER PANEL. DO NOT ROUTE THE POWER CABLES BEHIND OR TO THE LEFT OF THE POWER PANEL. RUNNING THE CABLES BEHIND OR TO THE LEFT OF THE POWER PANEL COULD INTERFERE WITH THE PROPER OPERATION OF THE TRANSFER SWITCH.

Test all power cables prior to connection to the unit to ensure that conductors or cable insulation have not been damaged while being pulled into position.

Power cables are to be connected to solderless screw type lugs located on the transfer switch switching devices. Refer to the separate Customer Wiring Booklet supplied with the transfer switch equipment for power termination Verify that the lugs supplied will accommodate the power cables being used. Also verify that the cables comply with local electrical codes. Standard transfer switch equipment, as supplied from the factory, will accommodate the wire sizes shown in Table **4.2**.

Carefully strip insulation from the power cables to avoid nicking or ringing of the conductor strands. Prepare the stripped conductor termination end by cleaning it with a wire brush. If aluminum conductors are used, apply an appropriate joint compound to the clean conductor surface area.

Table 4.2 Transfer Switch Equipment Wire Sizes

Transfer Switch Ampere Rating	Wire Size Ranges	Number of Cables per Phase
30-150	#14-3/0	1
200	#9-300MCM	1
225-300	#3-350MCM	1
400	250-350MCM	2
600 (3P)	#1-500MCM	2
600 (4P)	3/0-400MCM	3
800	3/0-500MCM	4

WARNING

IMPROPER POWER CABLE CONNECTIONS CAN CAUSE EXCESSIVE HEAT AND SUBSEQUENT EQUIPMENT FAILURE.

Tighten cable lugs to the torque identified on the label affixed to the unit immediately adjacent to the lugs.

4.6 WIRING

WARNING

POWER CONDUCTORS AND CONTROL WIRING MAY HAVE VOLTAGE PRESENT THAT CAN CAUSE SEVERE PERSONAL INJURY OR DEATH. DE **ENERGIZE ALL POWER OR CONTROL CIRCUIT CONDUCTORS BEFORE BEGINNING TO PERFORM ANY WIRING ACTIVITY TO OR WITHIN THE TRANSFER SWITCH EQUIPMENT.**

Power sources, load conductors and control wiring should be connected to locations as indicated in the Customer Wiring Booklet supplied with the transfer switch equipment.

CAUTION

CHECK THE TRANSFER SWITCH EQUIPMENT NAMEPLATE FOR RATED VOLTAGE. IT SHOULD BE THE SAME AS THE NORMAL AND EMERGENCY LINE VOLTAGES. OPERATING THE EQUIPMENT ON IMPROPER VOLTAGE CAN CAUSE EQUIPMENT DAMAGE.

Once the transfer switch equipment has been installed and wired, perform initial mechanical and electrical procedures as outlined in Section 6 to verify that the equipment is installed and operating properly.

NOTICE

Remember to reattach the solid steel power panel shield to the ratchet assembly after completing any of the procedures described in this section.

4.7 ENGINE START CONNECTION

The engine control contact connections are located on the logic panel of the ATS. Connect the engine start wires to the red terminal blocks marked 51 and 52. A contact closes between these terminal blocks when an engine start signal is provided by the ATS logic. The wiring diagram provides additional engine start connection information.

NOTICE

Prior to making the engine start connection to the switch, set the engine generator controls selector switch in the OFF position to prevent an unwanted engine start.

4.8 VOLTAGE SELECTION ADJUSTMENTS

Certain devices, such as the Voltage Selection Panel, sensing relays and timers, need to be set and/or calibrated prior to placing the transfer switch equipment into service. Adjustments for logic devices are described in the separate instructional document dedicated to the specific logic being used. Voltage selection adjustments are described here.

CAUTION

BE SURE THAT THE CORRECT VOLTAGE IS SELECTED TO MATCH THE SYSTEM VOLTAGE. AN IMPROPER SELECTION AND/OR CONNECTION COULD RESULT IN EQUIPMENT DAMAGE.

Vertical Design Voltage Selection

The vertical design transfer switch is furnished with a multi-tap Voltage Selection Panel to the right of the power panel. Seven front accessible taps from 208 to 600 volts AC are provided (Figure **3-4**). A small discon-

Katolight Service - Master Repair Manual - Page 4101

nect plug is provided to change from one voltage to another.

Horizontal Design Voltage Selection

Horizontal design transfer switches are furnished with an adjustable line voltage plug and receptacles below the power panel. To change the line voltage, remove the covers and insert the plug in the desired receptacle (Figure **4-5**).

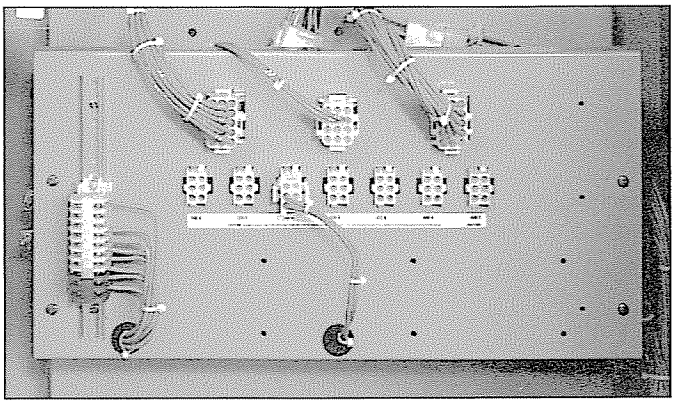

Figure 4-5 Line Voltage Plug and Receptacles (shown with covers removed) for Horizontal Design

SECTION 5: OPERATION

5.1 GENERAL

A transfer switch provides main contacts to connect and disconnect the load to and from the normal and emergency power sources (Paragraph 3.2.2). Each transfer mechanism provides the mechanical motion required to open and close the mechanically interlocked main contacts (Paragraph 3.2.3).

Note that the transfer mechanisms for the two types of ATS described in this booklet (30-150A and 225-1000A) are different for both the manual and automatic modes.

NOTICE

If a transfer switch with any type of electrical operating capabilities is to be operated utilizing the manual operating handle, it is strongly recommended that the transfer motor circuit first be isolated. This is accomplished by unplugging the (P3) plug marked motor disconnect (Figure 5-1). Any attempt to operate the manual handle without first isolating the motor circuit causes an automatic transfer.

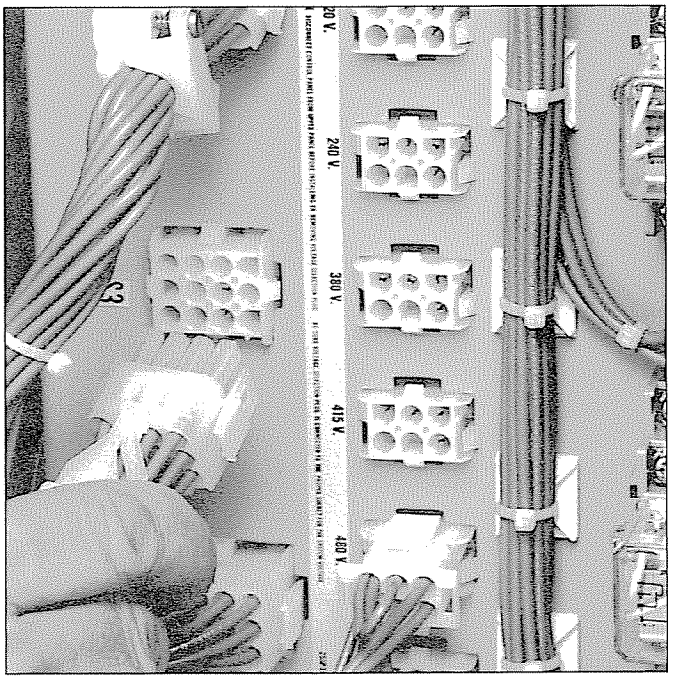

Figure 5-1 Motor Disconnect Being Unplugged

5.2 MANUAL OPERATION (225-1000A)

The manual operating handle can be used to create the rotational motion required to open and close the main contacts through a rigid mechanical interlocking system (Figure **5-2**). An indicator wheel attached to the operating handle and mechanical interlocking system rotates with each movement of the handle to open and/or close the main contacts (Figures **5-3**). Three distinct switch positions are provided and indicated visually on the indicator wheel (Figure **5-4**). The three distinct switch positions or contact conditions are:

- **Normal -** The contacts associated with the normal power source are closed and the emergency power source contacts are open.
- **Neutral -** The contacts associated with both the normal power source and emergency power source are open. This position allows for load circuit maintenance.
- **Emergency -** The contacts associated with the normal power source are open and the emergency power source contacts are closed.



Figure 5-2 Transfer Switch Manual Operating Handle in Use (225-1000A Models)

Katolight Service - Master Repair Manual - Page 4103

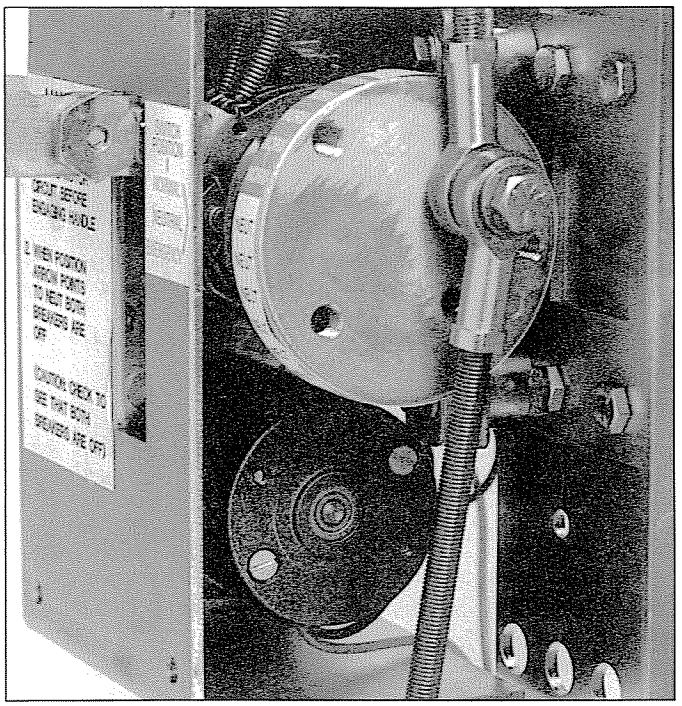

Figure 5-3 Indicator Wheel Mounted in the Switch with Motor Under the Wheel (225-1000A Models)

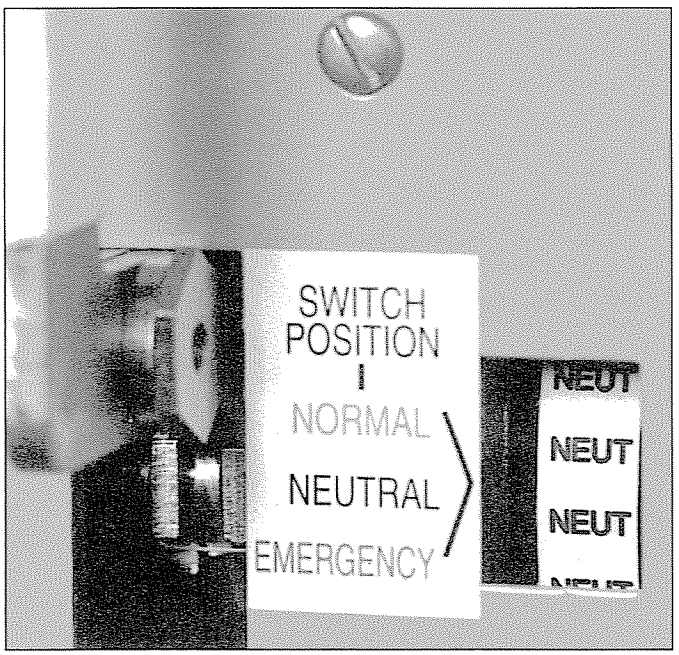

Figure 5-4 Indicator Wheel in Neutral Position (225-1000A Models)

To manually operate the transfer switch, the operating handle is ratcheted until the desired switch position is indicated on the indicator wheel. The operating handle, no matter what design or type of switch operation, is always electrically "dead" and the indicator wheel free-wheels should a particular switch have a motor and be capable of electrical operation. This feature ensures no operator problems should the switch automatically operate while the manual handle is being used.

5.3 MANUAL OPERATION (30-150A)

To operate the switch manually, remove the pivot bolt (located between the two switches (Figure **4-2**) using a 5/8-inch wrench or socket. Lift the lever off the two switches (Figure **5-5**), which can then be operated manually (Figure **5-6**). The switches are mechanically interlocked so that only one can be in the ON position at any one time, but both can be in the OFF position at the same time.

5.4 AUTOMATIC TRANSFER

The operating sequence of an automatic transfer switch is dictated by the switch's standard features and selected options. Operation of an automatic transfer switch during normal source failure and normal source restoration will be described here with only standard options included on the switch. Additional options, as described in Section 3, can change sequences and timing, depending upon the options selected. Become familiar with additional options selected and their effect on the normal operation of an automatic transfer switch.

5.4.1 NORMAL POWER SOURCE FAILURE

Standard normal source failure is defined as a reduction or loss of voltage. If this occurs, the sequence of operation is as follows:

- Failure of the normal source is detected by the microprocessor intelligence.
- When the microprocessor detects a failure, the normal relay drops out, opening certain contacts while closing others. One of the contacts starts the engine-driven generator.
- When the emergency source voltage reaches its operation rating, an emergency relay closes, starting the transfer operation. This operating sequence opens the normal switch and closes the emergency switch.
- The load is now transferred to emergency source.

Katolight Service - Master Repair Manual - Page 4104

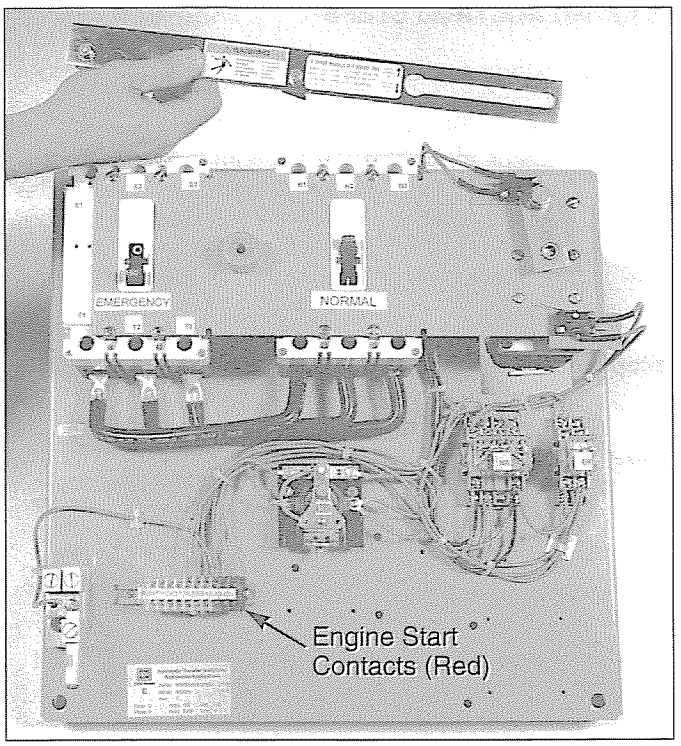

Figure 5-5 Transfer Mechanism with Lever Removed (30-150A Model)

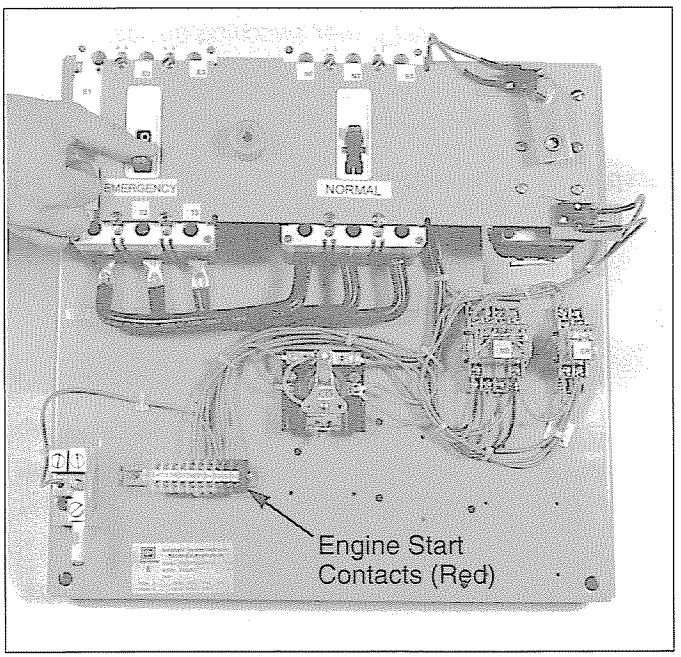

Figure 5-6 Switch Being Manually Operated (30-150A Model)

5.4.2 NORMAL POWER SOURCE RESTORATION

- A return to the normal power source begins when the voltage in all phases of a three-phase sensing unit or phase-to-phase in a single sensing unit is restored to a present value.
- At the present voltage, the microprocessor will cause the normal relay to pickup.
- The normal relay closes certain contacts while opening others. This starts the return to the normal power source and normal transfer switch operation.
- During this sequence, the emergency power source switch is opened and the normal power source switch is closed.
- Simultaneously, the engine cool-down relay initiates the shut down of the engine driven generator.
- Transfer of the load back to the normal power source is now complete.

Katolight Service - Master Repair Manual - Page 4105

SECTION 6: TESTING AND PROBLEM SOLVING

6.1 TESTING

After the transfer switch equipment is initially installed or during planned outages, the installation should be tested to ensure that all equipment operates properly. This attention to detail will help to avoid unexpected malfunctions. Mechanical and/or electrical tests should be performed as described in this section.

The frequency of subsequent testing should be based on recommendations of the generator set manufacturer. Use the test switch to check the electrical operation of the switch. ALWAYS RETURN THE SWITCH TO THE AUTO POSITION AFTER THE TEST IS COMPLETE.

WARNING

HIGH VOLTAGES ASSOCIATED WITH OPERATIONAL TRANSFER SWITCH EQUIPMENT PRESENT A SHOCK HAZARD THAT CAN CAUSE SEVERE PERSONAL INJURY OR DEATH. USE EXTREME CAUTION TO AVOID TOUCHING ELECTRICAL CONNECTIONS WHENEVER INSPECTING OR TESTING THE EQUIPMENT.

IN ADDITION, IMPROPER OPERATION OF THE GENERATOR SET PRESENTS A HAZARD THAT CAN CAUSE SEVERE PERSONAL INJURY OR DEATH. OBSERVE ALL SAFETY PRECAUTIONS IN YOUR GENERATOR SET OPERATIONS AND INSTALLATION MANUALS.

6.1.1 MECHANICAL AND/OR ELECTRICAL TESTING

NOTICE

Since Option 4 (Time Delay Engine Cool-Off) as described in Section 3 is standard, an engine start signal will be present for a period of time when the switch is first energized. The period of time is equal to the timer setting. To avoid starting the engine during this time period, turn the generator controls to the OFF position.

Energize the transfer switch equipment as described in Paragraphs 6.1.2 through 6.1.6. Insure that all safety precautions are taken and that all WARNINGS and CAUTIONS are observed.

6.1.2 NO VOLTAGE STEPS

With no voltage available on either power source, proceed as follows:

Step 1: Check to make sure that both the normal and emergency power switching devices are in the OPEN position. The switching devices can be put into the OPEN position by use of the manual operator and stopping in the NEUTRAL position.

Step 2: Check to make sure the test selector switch, provided, is in the AUTO position.

Step 3: The generator engine start controls should be in the OFF position to prevent an undesired start.

Step 4: Preset all timing circuits in keeping with timing instructions as outlined in Section 7.

Step 5: Check all transfer switch loads to ensure that they are ready to be energized.

6.1.3 CONNECTING POWER SOURCES

Step 1: Close the normal power source upstream protection device.

a) The normal power switching device should close.

Step 2: Connect the engine start battery cable.

Step 3: With the emergency generator in the OFF position dose the emergency power source upstream protective device, assuming such a device used.

NOTICE

At this point and prior to making any attempt to energize the transfer switch equipment, the engine-driven generator should be operated. If necessary, the voltage regulator on the generator should be adjusted according to the manufacturer's recommendations. The automatic transfer switch equipment will respond only to the rated voltage and frequency indicated. on the switch rating nameplate.

Step 4: Reclose any generator engine-start controls opened as a result of actions taken in Step 4, Paragraph 6.1.2

Katolight Service - Master Repair Manual - Page 4106

Step 5: Where required, use an accurate voltmeter to check phase-to-phase and phase-to-neutral voltages present at the transfer switch normal, emergency, and/or load terminals.

6.1.4 OPERATIONAL CHECKS

Step 1: Check to ensure that the normal switching device is in the CLOSED position. This should have been done in Step 1a Paragraph 6.1.3.

Step 2: Initiate an automatic transfer operation from the normal to emergency power source by moving the test selector switch from the AUTO to the TEST position.

a) After the Time Delay Enging Starting (TDES) has timed out, the engine should start, run, and build up to normal voltage and frequency.

b) The transfer switch will transfer to the emergency power source (normal switching device opens and emergency switching device closes) after the Time Delay Normal to Emergency (TDNE) times out.

Step 3: Initiate an automatic transfer operation back to the normal power source by moving the test selector switch from the TEST to the AUTO position.

a) After the Time Delay Emergency to Normal timer (TDEN) has timed out, the transfer switch will transfer back to the normal power source (emergency switching device opens and normal switching device closes).

b) The Time Delay for Engine Cool-Off (TDEC) option will allow the engine to run unloaded for a preset time after transfer to normal power source is completed.

6.1.5 ALTERNATE TESTS

1. Alternate operational tests may be possible depending upon the options provided with any given transfer switch. Refer to the schematic diagram provided with the transfer switch equipment along with the specification nameplate to determine the exact options provided.

2. If the transfer switch is operated manually with the normal power source connected and available, it will cycle back to normal power source, since it is the preferred source. The transfer switch is designed for safe manual transfer if an automatic transfer is initiated during the manual transfer.

6.2 PROBLEM SOLVING

WARNING

HAZARDOUS VOLTAGES IN AND AROUND TRANSFER SWITCH EQUIPMENT DURING THE PROBLEM SOLVING PROCESS CAN CAUSE PERSONAL INJURY AND/OR DEATH. AVOID CONTACT WITH ANY VOLTAGE SOURCE WHILE PROBLEM SOLVING.

WARNING

ONLY PROPERLY TRAINED PERSONNEL FAMILIAR WITH THE TRANSFER SWITCH EQUIPMENT AND ITS ASSOCIATED EQUIPMENT SHOULD BE PERMITTED TO PERFORM THE PROBLEM SOLVING FUNCTION. IF AN INDIVIDUAL DOES NOT FEEL QUALIFIED TO PERFORM THE PROBLEM SOLVING FUNCTION,THE INDIVIDUAL SHOULD NOT ATTEMPT TO ANY OF THESE PROCEDURES.

A basic problem-solving effort is the first step to take prior to calling for assistance. Frequently, the effort will successfully address most problems encountered. The problem solving procedure is presented in the following paragraphs as observed problem symptoms and one or more possible solution steps. Remember, only qualified individuals familiar with the transfer switch equipment and the system in which it is applied should attempt these problem solving procedures.

If a problem persists after having completed the problem-solving procedure, contact a Cutler-Hammer representative for further assistance. When calling for assistance, the following is the minimum information required to properly address the need:

1. Style Number of transfer switch
2. Catalog Number of transfer switch
3. Actual location of transfer switch (type of facility, address etc.)
4. Company name Name and position of individual representing company
5. Basic description of situation as it exists

Katolight Service - Master Repair Manual - Page 4107

6. Any results of problem solving steps taken and/or readings taken

6.2.1 TRANSFER SWITCH APPEARS INOPERATIVE

Step 1: Verify that all plugs and sockets are properly interconnected

Step 2: Verify that the correct system voltage is correct by measuring the voltage at the line side of the normal switching device.

Step 3: Verify that the voltage selection plug is in the proper position to match the system voltage.

Step 4: Look for any obviously burned components. Determine the cause and rectify, if possible. Replace defective components after the cause is determined.

Step 5: Manually ratchet the operating handle to the NORMAL position. Verify whether or not the system voltage now appears on the load terminals.

If YES: Proceed to check logic for problems.

If NO: Check all power connections and the switching mechanism.

6.2.2 MOTOR KEEPS TURNING AND TRANSFER SWITCH WILL NOT STOP IN POSITION

Step 1: Check the appropriate limit switch (normal or emergency). The normal limit switch (NLS) should open with normal switch closed and emergency limit switch (ELS) should open with emergency switch closed

6.2.3 TRANSFER SWITCH WILL NOT AUTOMATICALLY TRANSFER TO NORMAL

Step 1: Are the correct line voltage and frequency available at terminals N1, N2, N3 and N4? Record reading.

If YES: Proceed to Step 2.

If NO: Check source.

Step 2: Is the voltage selector plug in the correct position?

If YES: Proceed to Step 3.

If NO: Position plug correctly.

Step 3: Is the test switch in the TEST position?

If YES: Move switch to AUTO.

If NO: Proceed to Step 4.

Step 4: Check the voltage on microprocessor logic connector P1, terminals 1 and 2 using an AC voltmeter The voltage should measure 24 VAC ±1 volt. Record reading.

If YES: Proceed to Step 5.

If NO: Measure voltage on Tranformer NT1X1, and X2. Voltage should measure 120 VAC ±10 volts. Record reading.

If NO: Check NT1.

If YES: Measure voltage from Transformer NT1 X1 to Terminal Block 59 and 60. Voltage should be 120 VAC ±10 volts.

If YES: Check NT2.

If NO: Check jumpers and options installed between terminals 59 and 60. (PE, Test Switch, etc..)

Step 5: Check the voltage on microprocessor logic connecor P1, terminals 4 and 5 using an AC voltmeter. The voltage should measure 12 VAC ±0.5 volts. Record reading.

If YES: Proceed to Step 6.

If NO: Check NT3.

Step 6: Check the voltage on microprocessor logic connector P1, terminals 6 and 7 using an AC voltmeter. The voltage should measure 12 VAC ±0.5 volts. Record reading.

If YES: Proceed to Step 7.

If NO: Check NT4.

Step 7: Is normal voltage LED illuminated?

If YES: Proceed to Step 8.

If NO: Verify board is properly programmed. Replace board if necessary.

Step 8: Is the TDEN or LED illuminated?

If YES: Proceed to Step 9.

If NO: Check board.

Step 9: Check the voltage from NT1 X4 to Terminal 23 on the microprocessor logic connector P1. Is it 120 VAC ±10 volts?

If YES: Proceed to Step 10.

If NO: Check normal limit switch (NLS).

Step 10: Check the voltage from Terminal 20 to 24. Is it 120 VAC ±10 volts?

If YES: Check motor and bridge rectifier.

If NO: Check normal relay (NR).

Step 11: Contact Cutler-Hammer.

6.2.4 TRANSFER SWITCH WILL NOT AUTOMATICALLY TRANSFER TO EMERGENCY

Step 1: If the alternate source is a generator, is it running?

If YES: Proceed to Step 2.

If NO: Check generator. Check engine start contact.

Step 2: Is the correct line voltage AND frequency available at terminals E1, E2, E3 and E4? Record reading.

If YES: Proceed to Step 3.

If NO: Make sure generator breaker is closed. Verify there is output voltage from generator.

Step 3: Is the voltage selector plug in the correct positon?

If YES: Proceed to Step 4.

If NO: Position plug correctly.

Step 4: Is the normal source available?

If YES: Is a test (either manual or exercise) being run?

If YES: Proceed to Step 5.

If NO: STOP! Transfer switch SHOULD NOT transfer to emergency.

If NO: Proceed to Step 5.

Step 5: Check the voltage on microprocessor logic connector P1, terminals 8 and 10 using an AC voltmeter. The voltage should measure 24 VAC ±1 volt. Record reading.

If YES: Proceed to Step 6.

If NO: Measure voltage on Transformer ET1X1, and X2. Voltage should measure 120 VAC ±10 volts. Record reading.

If NO: Check ET1.

If YES: Measure voltage from Transformer ET1X1 to Terminal Block 61. Voltage should be 120 VAC ±10 volts.

If YES: Check ET2.

If NO: Check jumpers and options installed between Terminals 61 and 62.

Step 6: Are emergency voltage or frequency LED illuminated?

If YES: Proceed to Step 9.

If NO: Check board.

Step 7: Is the TDNE LED illuminated.

If YES: Proceed to Step 10.

If NO: Is TDEN (Time Delay Emergency to Normal) LED illuminated?

If YES: STOP! ATS should not be in emergency.

If NO: Check board.

Step 8: Check the voltage from ET1X4 to Terminal 14. Is it 120 VAC ±10 volts? Record reading.

If YES: Proceed to Step 11.

If NO: Test emergency relay (ER).

Step 9: Check the voltage from ET1X3 to Terminal 15 on the microprocessor logic connector P1. Is it 120 VAC ±10 volts? Record reading.

If YES: Proceed to Step 12.

If NO: Check emergency limit switch (ELS) in the emergency switch.

Step 10: Check the voltage from Terminal 19 to Terminal 24. Is it 120 VAC ±10 volts? Record reading.

If YES: Proceed to Step 13.
If NO: Test normal relay (NR).

Step 11: Contact Cutler-Hammer for additional assistance.

SECTION 7: ADJUSTMENTS

7.1 GENERAL

Certain devices, such as the sensing relays and timers, need to be set and/or calibrated prior to placing the transfer switch equipment into service. The devices furnished with the equipment will be the same or similar to those described in this section. Adjustments should be made as instructed for the devices supplied.

7.2 PLANT EXERCISER TIMER

The plant exerciser is a 7-day timer switch used to exercise the engine driven generator.

7.2.1 TIMER PROGRAMMING

The timer incorporates a 7-day time base, permitting each day of the week to be uniquely programmed (Figure **7-1**). For convenience, block programming is also provided. This allows up to seven days to be grouped together if the ON and OFF times atre the same. The timer displays in AM/PM format. When setting the hours, attention must be given to whether it is AM or PM.



Figure 7-1 Plant Exerciser Timer

NOTICE

After power-up, press the reset button before setting the time or programming. This will clear the memory of all data from testing and handling.

7.3 MICROPROCESSOR-BASED LOGIC

There are four main groups of functions included in the AGswitch controller (Figure **7-2**).

7.3.1 VOLTAGE SENSING FUNCTIONS

Volt sensing functions are factory programmed

- 1-phase or 3-phase sensing
- Undervoltage sensing

Dip switches are used to select the pickup and dropout points for normal undervoltage and emergency undervoltage.

Undervoltage Sensing Function

- Availiable pickup settings (% of normal): 100, 95, 90, and 85
- Available dropout settings (% from pickup setting): 5, 10, 15, and 20.

7.3.2 FREQUENCY SENSING FUNCTIONS

The controller is factory programmed to sense underfrequency of the emergency power source only.

Dip switches are used to select the normal frerquency of the power sources and the pickup points.

The normal frequency settings are 50 or 60 Hz. The dropout points are fixed at 2 Hz differntial. Available pickup settings for the under frequency function are:

- at 60 Hz nominal = 56, 57, 58, 59 Hz
- at 50 Hz nominal = 46, 47, 48, 49 Hz

7.3.3 TIME DELAY FUNCTIONS

The controller is factory programmed to include different time delay functions. Each function has different timing ranges that can be adjusted by moving the appropriate dip switches or jumper.

Katolight Service - Master Repair Manual - Page 4111

TDNE, TDEN, and TDEC (Dip Switches)

- 0.1 sec. to 60 sec.
- 10 sec. to 10 min.
- 1 min. to 60 min.
- 3 min. to 200 min.

TDES (Jumper)

- 0-20 (jumper on)
- 20-40 (jumper off)

Both the pickup and dropout values of the sensing function and the timing ranges of the time delay functions may be easily changed by following the instructions provided in the later sections.

Controllers shipped form the factory are programmed to the user's original specirication or to the standard pickup and dropout values as follows:

Function	Pickup	Dropout
Undervoltage90%	80%	
Underfrequency (60 Hz)	58 Hz	56 Hz
Underfrequency (50 Hz)	48 Hz	46 Hz

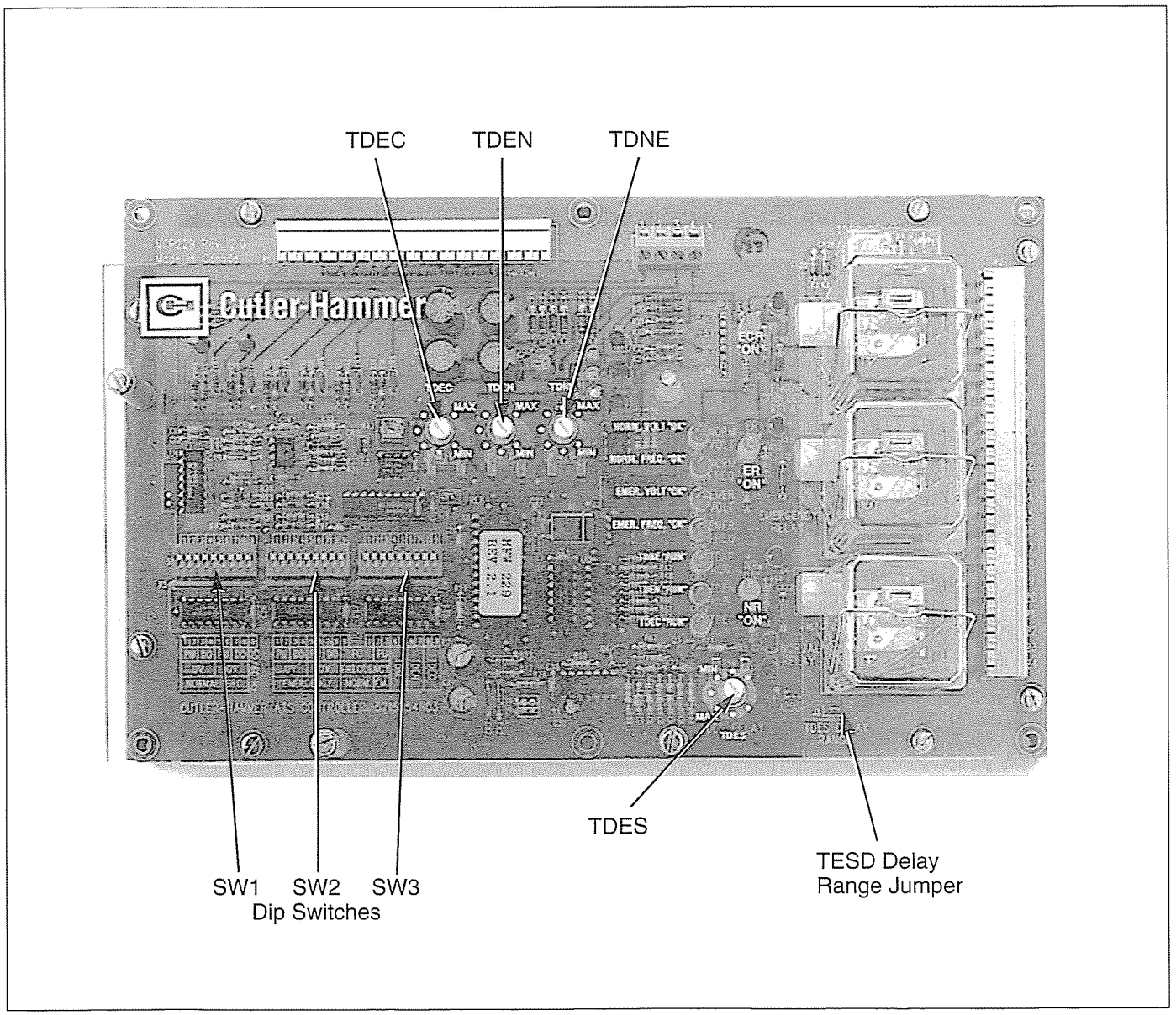

Figure 7-2 Genswitch Microprocessor-based Logic Control Panel

Katolight Service - Master Repair Manual - Page 4112

7.3.4 ON-BOARD INDICATORS

Ten LED indicators are installed on the controller's circuit board for the following funcitons:

Norm Volt	LED ON indicates the voltage level of the normal source is within present limits.
Norm Freq	LED OFF indicates the normal frequency sensing option is not installed.
Emer. Volt	LED ON indicates the voltage level of the emergency source in within preset limits.
Emerg. Freq.	LED ON indicates the frequency of the emergency source is within preset limits. LED Flashes indicate the frequency of the emergency source is out of preset limits. LED OFF indicates the emergency frequency sensing option is not installed.
TDNE RUN	LED flashes indicate TDNE time delay function is in progress.
TDEN RUN	LED flashed indicate TDEN time delay function is in progress.
TDEC RUN	LED flashes indicate TDEC time delay function is in progress.
NR ON	LED ON indicates the normal relay is energized.
ER ON	LED ON indicates the emergency relay is energized.
ECR ON	LED ON indicates the engine cooldown relay is energized.

WARNING

IF THE CONTROLLER IS TO BE USED FOR THREE-PHASE SENSING, YOU MUST INSURE THAT THE SENSING SIGNALS (NORMAL OR EMERGENCY) ARE FED BY A THREE-PHASE TRANSFORMER PACKAGE. ON THE CUTLER-HAMMER BRAND THREE-PHASE UNITS SOLD BY CUTLER-HAMMER, THE STANDARD IS THREE PHASE SENSING ON NORMAL, AND SINGLE-PHASE SENSING ON EMERGENCY.

7.3.5 INSTRUCTIONS FOR DIP SWITCH SETTING

The DIP switches located and accessed from the bottom-left portion of the control board must be properly set according to application requirements. The three DIP switches are labeled from left to right (Figure **7-2**) as SW1, SW2, and SW3. All switches are turned ON or OFF by sliding the switch. As you face the DIP switches, slide:

- To the top to turn the switch ON
- To the bottom to turn the switch OFF

Always look for the ON and OFF designations on the hardware or printed circuit borad to be sure you are setting the switches correctly.

Table **7.1** shows the selection grouping that can be provided by the three DIP switches.

Table 7.1 Selection Grouping for DIP Switches

DIP Switch	Side Switch	Description
SW1	1 2 3 4	Pickup and Dropout values for the Normal Source UNDERVOLTAGE SENSING. Refer to Table 7.2.
	9	Line Frequency selection ON = 60 Hz, OFF=50 Hz
SW2	1 2 3 4	Pickup and Dropout values for the Emergency Source UNDERVOLTAGE SENSING. Refer to Table 7.2.
	2 3	Pickup and Dropout valuse selection for the Emergency Source. Underfrequency and/orOverfrequency sensing. Refer to Table 7.4.
SW3	4 5	Dealy Timing Ranges Selection for TDNE function. Refer to Table 7.5.
	6 7	Dealy Timing Ranges selection for TDNE funciton. Refer to Table 7.6.
	8 9	Delay Timing Ranges selection for TDEC function. Refer to Table 7.7.

Katolight Service - Master Repair Manual - Page 4113

Table 7.2 Parameters for Programming Undervoltage Pickup and Dropout for Normal Power Source

Pickup (%)	Dropout (%)	SW1-1	SW1-2	SW1-3	SW1-4
100	95	ON	ON	ON	ON
	90	ON	ON	OFF	ON
	85	ON	ON	ON	OFF
	80	ON	ON	OFF	OFF
95	90	OFF	ON	ON	ON
	85	OFF	ON	OFF	ON
	80	OFF	ON	ON	OFF
	75	OFF	ON	OFF	OFF
90	85	ON	OFF	ON	ON
	80	ON	OFF	OFF	ON
	75	ON	OFF	ON	OFF
	70	ON	OFF	OFF	OFF
85	80	OFF	OFF	ON	ON
	75	OFF	OFF	OFF	ON
	70	OFF	OFF	ON	OFF
	65	OFF	OFF	OFF	OFF

Table 7.3 Parameters for Programming Undervoltage Pickup and Dropout for Emergency Power Source

Pickup (%)	Dropout (%)	SW2-1	SW2-2	SW2-3	SW2-4
100	95	ON	ON	ON	ON
	90	ON	ON	OFF	ON
	85	ON	ON	ON	OFF
	80	ON	ON	OFF	OFF
95	90	OFF	ON	ON	ON
	85	OFF	ON	OFF	ON
	80	OFF	ON	ON	OFF
	75	OFF	ON	OFF	OFF
90	85	ON	OFF	ON	ON
	80	ON	OFF	OFF	ON
	75	ON	OFF	ON	OFF
	70	ON	OFF	OFF	OFF
85	80	OFF	OFF	ON	ON
	75	OFF	OFF	OFF	ON
	70	OFF	OFF	ON	OFF
	65	OFF	OFF	OFF	OFF

Table 7.4 Parameters for Programming Underfrequency Pickup and Dropout for Emergency Power Source

Pickup (%)	Dropout (%)	SW3-2	SW3-3
59	57	ON	ON
58	56	OFF	ON
57	55	ON	OFF
56	54	OFF	OFF
49	47	ON	ON
48	46	OFF	ON
47	45	ON	OFF
46	44	OFF	OFF

Table 7.5 Range Selection for Time Delay Normal to Emergency (TDNE)

Range	SW3-4	SW3-5
0.10 sec. to 60 sec.	ON	ON
0.16 min. to 10 min.	OFF	ON
1.00 min. to 60 min.	ON	OFF
3.00 min. to 200 min.	OFF	OFF

Table 7.6 Range Selection for Time Delay Emergency to Normal (TDEN)

Range	SW3-6	SW3-7
0.10 sec. to 60 sec.	ON	ON
0.16 min. to 10 min.	OFF	ON
1.00 min. to 60 min.	ON	OFF
3.00 min. to 200 min.	OFF	OFF

Table 7.7 Range Selection for Time Delay Engine Cool Down (TDEC)

Range	SW3-8	SW3-9
0.10 sec. to 60 sec.	ON	ON
0.16 min. to 10 min.	OFF	ON
1.00 min. to 60 min.	ON	OFF
3.00 min. to 200 min.	OFF	OFF

Katolight Service - Master Repair Manual - Page 4114

Table 7.8 This Table Serves as a Quick Reference for Finding the Actual Voltage Level that Relates to the Percentage of the Normal System Voltage

	120	208	220	240	380	400	415	480	600	
65%	78	135	143	156	247	260	270	336	390	
70%	84	146	154	168	266	280	291	336	420	
75%	90	156	165	180	285	300	311	360	450	
80%	96	166	176	192	304	320	332	384	480	**Std. UV Pickup**
85%	102	177	187	204	323	340	353	408	510	
90%	108	187	198	216	342	360	374	432	540	**Std. UV Pickup**
95%	114	198	209	228	361	380	394	456	570	
100%	120	208	220	240	380	400	415	480	600	

SECTION 8: MAINTENANCE

8.1 INTRODUCTION

HIGH VOLTAGES ARE PRESENT IN AND AROUND TRANSFER SWITCH EQUIPMENT. BEFORE INSPECTING OR MAINTAINING THIS EQUIPMENT, DISCONNECTING LINE POWER FROM THE LOCKING OUT, IF POSSIBLE, THE NEXT HIGHEST DISCONNECT DEVICE. FAILURE TO FOLLOW THIS PROCEDURE COULD CAUSE PERSONAL INJURY AND/OR DEATH.

In general, transfer switch equipment is designed to be relatively maintenance free under normal usage. However, because of the variability of application conditions and the importance placed on dependable operation by this type of equipment, inspection and maintenance checks should be made on a regularly scheduled basis. Since equipment maintenance will consist mainly of keeping the equipment clean, the frequency of maintenance will depend to a large extent on the cleanliness of the surrounding. If a significant amount of dust of foreign matter is present, a more frequent maintenance schedule should be followed.

It is suggested that visual inspections of the equipment be made on a regular basis, not just during scheduled periods. Always be alert for an accumulation of dirt in and around the structure; loose parts and/or hardware; cracks and/or discoloration to insulation; and damaged or discolored components.

Figure **8-1** is the wiring diagram for the Genswitch automatic transfer switch. Only qualified and experienced personnel should attempt any diagnostic work using this diagram.

8.2 PROCEDURES

A suggested maintenance procedure to follow is outlined in Table **8.1**.

Katolight Service - Master Repair Manual - Page 4116

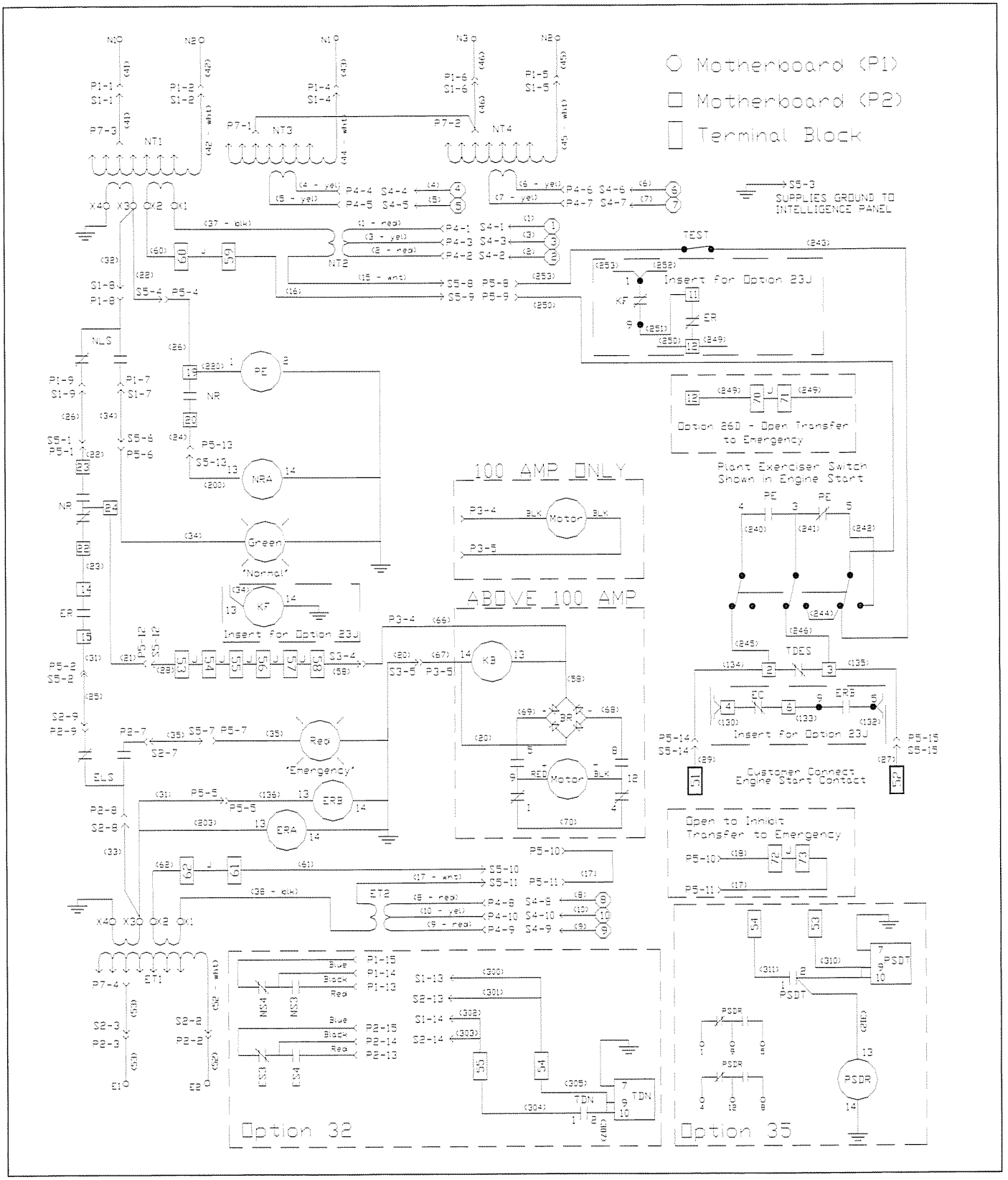

Figure 8-1 Wiring Diagram for AGswitch Automatic Transfer Switch

Katolight Service - Master Repair Manual - Page 4117

Table 8.1 Periodic Maintenance Procedures

Step	Action
a. Make transfer switch equipment safe for inspection and/or maintenance.	Disconnect line power from equipment being serviced by opening next highest disconnect device. Make certain that any accessory control power is switched off by disconnecting all control plugs.
b. Inspect structure area for safety hazards or potential maintenance problems.	Inspect area, especially where molded case switching devices are installed, for any safety hazards, including personnel safety and fire hazards. Exposure to certain chemical vapors can cause deterioration of electrical connections. Inspect for accumulated dirt, loose hardware or physical damage. Examine primary insulation for evidence of cracking or overheating. Overheating will show as discoloration, melting, or blistering of conductor insulation, or as pitting or melting of conductor surfaces due to arcing. Inspect secondary control connections for damage, and control wiring for insulation integrity.
c. Inspect molded case switching devices for dust, dirt, soot, grease, moisture or corrosion.	Remove dust, dirt, soot, grease, moisture and corrosion contamination from the surface of the switching device using a dry soft lint-free cloth, dry soft bristle brush and vacuum cleaner. Do not blow debris into circuit breaker or nearby breaker structure. If contamination is found, look for the source and fix the problem.
d. Check for material integrity, uneven wear, discoloration or loose hardware.	Severe material cracking will require replacement and loose hardware will need to be tightened.
e. Check terminals and connectors for looseness or signs of overheating.	Overheating will show as discoloration, melting, or blistering of conductor insulation. Connections that do not have signs of looseness or overheating should not be disturbed.
f. Exercise the molded case switching devices if they are not often exercised while in operation. This will permit wiping action by the contacts.	If a switching device is used for frequent switching during normal operation, this step can be disregarded.
g. Return transfer switch equipment to service.	Make certain all barriers are in place and doors closed. Re-apply secondary and primary power.

Katolight Service - Master Repair Manual - Page 4118

This instruction booklet is published solely for information purposes and should not be considered all inclusive. If further information is required, you should consult Cutler-Hammer.

Sale of product shown in this literature is subject to terms and conditions outlined in appropriate Cutler-Hammer selling policies or other contractual agreement between the parties. This literature is not intended to and does not enlarge or add to any such contract. The sole source governing the rights and remedies of any purchaser of this equipment is the contract between the purchaser and Cutler-Hammer.

NO WARRANTIES, EXPRESSED OR IMPLIED, INCLUDING WARRANTIES OF FITNESS FOR A PARTICULAR PURPOSE OR MERCHANTABILITY, OR WARRANTIES ARISING FROM COURSE OF DEALING OR USAGE OF TRADE, ARE MADE REGARDING THE INFORMATION, RECOMMENDATIONS AND DESCRIPTIONS CONTAINED HEREIN. In no event will Cutler-Hammer be responsible to the purchaser or user in contract, in tort (including negligence), strict liability or otherwise for any special, indirect, incidental or consequential damage or loss whatsoever, including but not limited to damage or loss of use of equipment, plant or power system, cost of capital, loss of power, additional expenses in the use of existing power facilities, or claims against the purchaser or user by its customers resulting from the use of the information, recommendations and description contained herein.

Cutler-Hammer
Pittsburgh, Pennsylvania U.S.A.

Effective 10/98 (ISI)
Style 5715B74H03
Printed in U.S.A.

PLAY IT SAFE
READ THIS MANUAL!



SERIES RATING INFORMATION MANUAL

Retain this manual in the directory card pocket located on the product for future reference.

PANELBOARDS AND SWITCHBOARDS

See labels on product for additional information.
Additional labels are provided with this booklet.

Cutler-Hammer

CONTENTS

Introduction . . . . . Page 2

UL Issues . . . . . Page 3

Code Issues . . . . . Page 3

Code Issues . . . . . Page 4

Use of Up-Over-Down Method of Protection . . . . . Page 5

Series Ratings . . . . . Page 6

Applying Series Ratings . . . . . Page 7

Example 1 . . . . . Page 8

Example 2 . . . . . Page 9

Example 3 . . . . . Page 10

Other Applications of Series Ratings . . . . . Page 10

Table I . . . . . Page 12

Table II . . . . . Page 13

Table II . . . . . Page 14

Table III . . . . . Page 15

Table IV . . . . . Page 16

Table V . . . . . Page 17

Table VI . . . . . Page 18

Table VII . . . . . Page 19

Table VIII . . . . . Page 20

Table IX . . . . . Page 21

Table X . . . . . Page 22

Table XI . . . . . Page 23

Table XII . . . . . Page 24

Notes . . . . . Page 25

INTRODUCTION

The purpose of this publication is to explain proper application of series ratings in Cutler-Hammer panelboards and switchboards.

Industry standards and the National Electrical Code (NEC) require protection of the entire electrical distribution system from damage due to short circuit faults. Article 230-65 of the NEC states "Service equipment shall be suitable for the short circuit current available at its supply terminals." The entire distribution system is required to meet this standard. Series rated systems have become an effective method of meeting these requirements.

There are three protection systems used to protect low voltage power distribution conductors and equipment. They are:

- Fully Rated Protection
- Fully Rated, Selectively Coordinated Protection
- Series Rated Protection

Fully Rated Protection - where all overcurrent devices are rated for the full prospective short circuit current at their line side terminals throughout the system.

Selectively Coordinated Protection - is a fully rated system where the overcurrent device closest to the fault will open first, thus isolating the faulty circuit.

Series Rated Protection - A short circuit interrupting rating assigned to a combination of two or more overcurrent protective devices which are connected in series and in which the rating of the downstream device(s) in the combination is less than the series rating.

The short circuit interrupting rating of the first device in the series must be equal to or greater than the available fault current. Downstream breakers, however, are not fully rated for the system's available fault current.

Series ratings are also known in the industry as integrated ratings, series combination ratings and series connected ratings. The upstream overcurrent device in the series may be either internally or externally feeding downstream devices.

UL ISSUES

In a series rated system, the overcurrent devices in series in the protective scheme must have been tested and listed by Underwriters Laboratories for series combination use in the system.

All Cutler-Hammer series ratings are in full compliance with all applicable requirements of the latest editions of UL 489, 891 and 67.

The UL Recognized Component Directory (the Yellow Book) contains breaker manufacturers' series connected listings. These are intended ONLY as a guideline for use by others who are responsible for their own testing, labeling and listing. Therefore, the UL Recognized Components Directory can not be used to interpret series connected ratings in equipment.

CODE ISSUES

Requirements of the National Electrical Code (NFPA-70) for series ratings may be met by equipment marked with ratings adequate for the available fault current at the point of application in the electrical system. Cutler-Hammer's panelboards and switchboards are marked consistent with NEC Article 240-83 (c).

Additionally, Article 110-22 requires field marking on equipment where series ratings are used. This label is supplied standard with all Cutler-Hammer panelboards and switchboards and reads "Caution - Series Rated System _____A Available. Identified Replacement Component Required."

IF SERIES COMBINATION RATINGS ARE USED ATTACH CAUTION LABEL (BELOW) TO ANY BREAKER COVER (REF. N.E.C. 110-22)

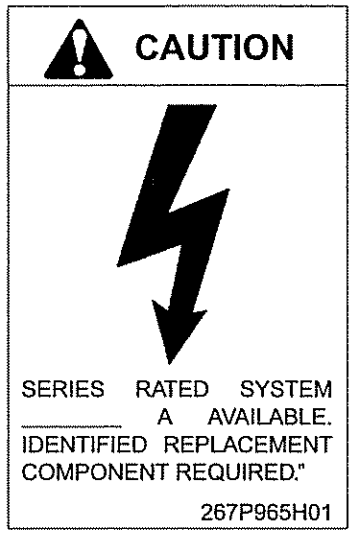

Note to Installing Electrician: The NEC requires the installer to properly apply and complete this label. Label(s) must be placed on all equipment where series ratings are utilized.

CAUTION

DO NOT APPLY FUSES USING THE UP-OVER-DOWN METHOD,* WHICH HAS BEEN RECOMMENDED BY SOME FUSE MANUFACTURERS FOR SIZING A CURRENT-LIMITING FUSE THAT PROTECTS A DOWNSTREAM MOLDED CASE CIRCUIT BREAKER WITH A SPECIFIED RMS SYMMETRICAL INTERRUPTING RATING. *THE METHOD CAN LEAD TO ERRONEOUS AND UNSAFE CONCLUSIONS AND SHOULD NOT BE USED.

Figure A

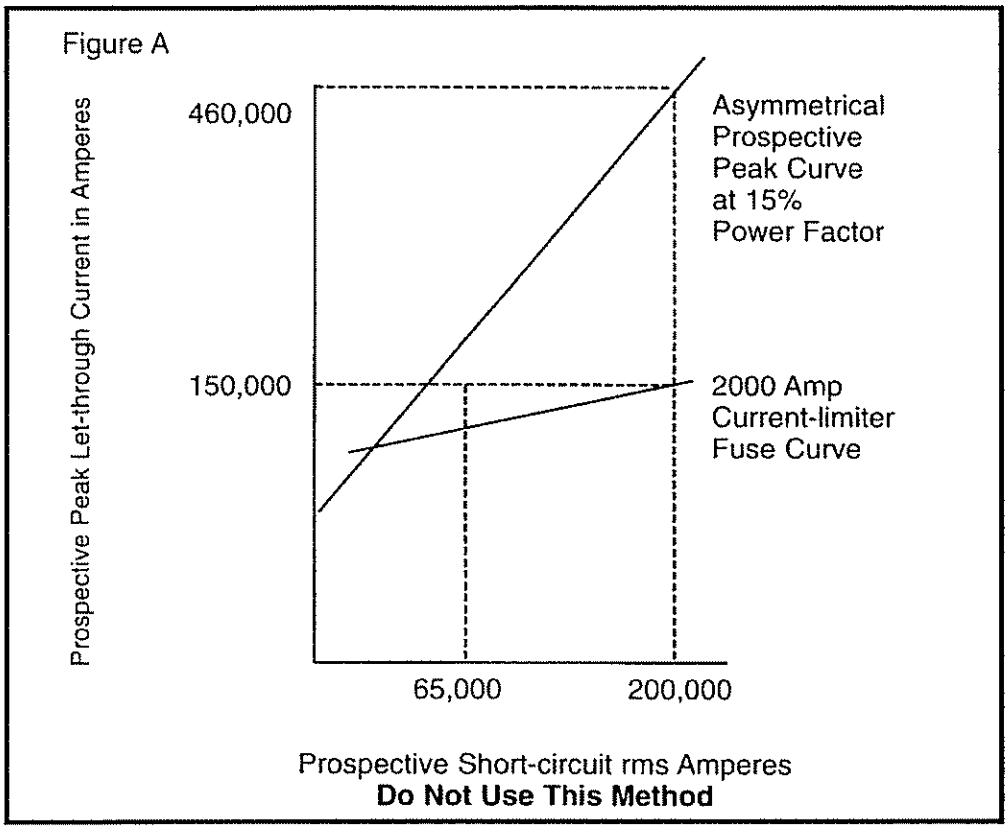

CONCLUSION- This conclusion is wrong when the downstream service has a blow-open contact assembly, as does a molded case circuit breaker or similar device. It may be valid when the current-limiting fuse is sized to protect a passive bus bar system.

The reason is that the up-over-down method ignores dynamic impedance (the inherent current-limiting of the down-stream molded case circuit breaker). Such impedance is developed directly by the forces of the let-through current created when the contacts are blown open.

Series ratings apply ***ONLY*** to those Cutler-Hammer breakers listed and published in this booklet. ***DO NOT USE "CLASSIFIED" BREAKERS.***

DANGER

USE OF OTHER DEVICES CAN CAUSE EXPLOSION, SEVERE INJURY, OR DEATH!

CLASSIFIED CIRCUIT BREAKER - A circuit breaker identified by the manufacturer of the circuit breaker as suitable for use in a specified panelboard as an alternate for a specified circuit breaker.

SPECIFIED PANELBOARD - The panelboard identified by the classified circuit breaker manufacturer by a catalog number or the equivalent provided on or with a classified circuit breaker.

SPECIFIED CIRCUIT BREAKER - The circuit breaker identified by the panelboard manufacturer by a catalog number or the equivalent for use with that manufacturer's panelboard.

APPLYING SERIES RATINGS

The following is provided to use the series rating tables on the following pages.

Step 1. Determine the available system voltage and fault current.

Step 2. Select the appropriate table using the system voltage.

Step 3. Use the appropriate "Series Equipment Rating" column equal to, or greater than, the available fault current, to determine the allowable UL recognized combinations of main (upstream) and branch (downstream) overcurrent devices. Main devices are shown in bold/shaded areas. Respective branch breakers are shown directly below their associated main device. If a rating is not initially found in a column, first look to the columns to the right for higher "Series Equipment Ratings" within the same table. If still not found, use ratings from table of a higher system voltage (higher numbered table(s).

EXAMPLE 1:

240V~, three phase, three wire, AC system with available fault current of 37,438A. Main (upstream) device is a 3 pole, 225A, FD breaker. The branch (downstream) breakers are 2 and 3 pole, 20, 30 and 60A, 240V~, BAB_H breakers.

1. Go to the 240V~ table (table #2).
2. Look down under the 42kA column. This rating is not shown.
3. Look to the columns to the right. This combination rating is shown under the 65kA column, and therefore is valid.

EXAMPLE 2:

480Y/277V~, three phase, four wire, AC system with available fault current of 62,097A. Main (upstream) device is a 3 pole, 250A, HJD breaker. The branch (downstream) breakers are 2 and 3 pole, 60, 70 and 100A FDB breakers.

1. Go to the 480Y/277V~ table (table #3).
2. Look down under the 65kA column. This rating is not shown.
3. Look to the columns to the right. This rating is still not shown.
4. Look at the table with the next higher system voltage (480V~, table #4).
5. This combination rating is shown under the 65kA column, and therefore is valid.

EXAMPLE 3:

208Y/120V~, three phase four wire, AC system with available fault current of 56,438A. Main (upstream) device is a 3 pole, 225A, ED breaker. The branch (downstream) breakers are single pole, 20A BAB (120/240V~), and 2 and 3 pole, 70A BAB_H (240V~).

1. Go to the 240V~ table (table #2)
2. Look under the 65kA column. This rating is shown under the 65kA column, and therefore is valid for combinations with the 2 and 3 pole (240V~) breakers.
3. Look at the 120/240V~ table (table #1) for the single pole (120/240V~) combination ratings.
4. Look under the 65kA column. This rating is shown under the 65kA column, and therefore is valid for combinations with the single pole (120/240V~) breakers.

OTHER APPLICATIONS OF SERIES RATINGS

Series ratings can also be applied under the following guidelines:

Any FULLY RATED breaker can be applied upstream, downstream, or in the middle of, any of the series ratings stated in the tables.

Any series rating stated in the tables may have additional series rated branch breakers of the EXACT SAME TYPE further downstream in that rating.

COMBINING SERIES RATINGS are allowed under certain conditions. Main and branch series ratings may be combined if:

Breakers A, B, and C are in series respectively from main to branch. Breakers A and B series rate together, breakers A and C series rate at the same interrupting rating level (or higher), it is allowable to use A, B, and C together at the A-B series rating.

It is improper to combine series ratings under the following condition;

Breakers A, B, and C are in series respectively from main to branch. Breakers A and B series rate together, breakers B and C series rate at the breaker B interrupting rating level, it is **NOT** allowable to use A, B, and C together at the A-B series rating. However, combining multiple overcurrent devices as in this example, can be accomplished if all devices in the series combination have been tested together and listed in triple rating tables #11 and #12.

"The information contained in this manual also applies to specifying the upstream overcurrent protective device for use with through-feed and subfeed panelboards without an integral main."

Katolight Service - Master Repair Manual - Page 4133

120/240V~ BREAKER/BREAKER Ground Fault Circuit Breakers (Suffix GF), are valid for 15 to 30A only.

TABLE I

Main Breaker Maximum amperes	Series Equipment Rating - kA Symmetrical							
	18	22	42	65	100			200
100	**EHD** BA,BAB QBGF HQP	**QBHW,QPHW** BA,BAB QBGF HQP QPGF		**GB,GHB** BA,BAB QBGF QBHW HQP QPGF QPHW	**FB-P** BA,BAB QBGF QBHW EHD FD HQP QPGF QPHW			**FCL** BA,BAB QBGF QBHW GB, GHB EHD FD HFD,HQP QPGF QPHW
150	**FDB** BA,BAB QBGF HQP							
200					**LA-P** BA,BAB QBHW EHD FD HQP QPHW			
225		**CAH** BA,BAB QBGF HQP QPGF		**ED,FD** BA,BAB QBGF QBHW QBHGF HQP QPGF	**EDH,EDC** BA,BAB QBGF HQP QPGF	**HFD** BA,BAB QBGF QBHW QBHGF GB, GHB EHD,FD HQP QPHW	**FDC** BA,BAB QBHW HQP QPHW	**FDC** GB, GHB EHD FD HFD
250				**JD,JDB** BA (15-70A) BAB (15-70A) QBHW EHD HQP (15-70A) QPHW	**HJD** GB, GHB EHD FD	**JDC** BA,BAB QBHW HQP QPHW	**JDC** GB, GHB EHD FD HFD	
400		**DK,KD,KDB** BA,BAB QBGF HQP QPGF	**DK,KD,KDB** BA (15-70A) BAB (15-70A) HQP(15-70A) QBHW QPHW	**HKD** BA (15-70A) BAB (15-70A) QBHW HQP(15-70A) QPHW	**DK,KD,KDB** EHD	**KDC** BA (15-70A) BAB (15-70A) HQP (15-70A)	**HKD** GB, GHB EHD FD	**KDC** GB, GHB EHD FD HFD **KDC** GB, GHB EHD FD HFD **LCL** BA,BAB QBGF QBHW GB, GHB EHD,FD HFD HQP, QPGF QPHW

Katolight Service - Master Repair Manual - Page 4134

* = Valid on 2 & 3 pole breakers only.
Not valid for 1 pole.

240V~ BREAKER/BREAKER For 1& 2 Pole 120/240V~ Rated Breakers (BAB, HQP, QBH, QPH) See Table I

Main Breaker Maximum amperes	Series Equipment Rating - kA Symmetrical					
	18	22	65	100	200	
100	**EHD** BAB_H HQP_H	**QBHW_H,QPHW_H** BAB_H HQP_H	**GB, GHB** BAB_H QBHW_H QPHW_H HQP_H	**FB-P** BAB_H EHD FDB FD HQP_H	**FCL** BAB_H QBHW_H GB, GHB EHD FD FDB HFD HQP_H QPHW_H	
150	**FDB** BAB_H HQP_H					
200				**LA-P** BAB_H QBHW_H EHD FDB FD CA CAH HCA JD, JDB HQP_H QPHW_H		
225	**CAH** BAB_H HQP_H	**ED** BAB_H QBHW_H HQP_H	**FD** BAB_H QBHW_H EHD* FDB CA CAH HCA HQP_H QPHW_H	**EDH, EDC** BAB_H HQP_H	**HFD** BAB_H QBHW_H GB, GHB EHD,HQP_H FDB, QPHW_H FD CA CAH HCA	**FDC** BAB_H QBHW_H HQP_H QPHW_H GB, GHB EHD FDB FD HFD
250		**JD, JDB** BAB_H (15-70A) QBHW_H EHD FDB CA CAH HCA HQP_H (15-70A) QPHW_H	**HJD** BAB_H (15-70A) QBHW_H HQP_H (15-70A) QPHW_H	**HJD** GB, GHB EHD FD FDB ED CA CAH HCA JD, JDB	**JDC** BAB_H QBHW_H HQP_H QPHW_H	**JDC** GB, GHB EHD FD FDB HFD ED EDH CA,CAH HCA JD, JDB HJD

TABLE II

Katolight Service - Master Repair Manual - Page 4135

240V~ (continued) BREAKER/BREAKER
For 1 & 2 Pole 120/240V~ Rated Breakers (BAB, HQP, QBH, QPH) See TABLE I

TABLE II (CONTINUED)

Main Breaker Maximum amperes	Series Equipment Rating - kA Symmetrical					
	42	65	100	200		
400	**DK, KD, KDB** QBHW_H QPHW_H	**DK, KD, KDB** BAB_H QBHW_H EHD FDB CA CAH HCA HQP_H	**HKD** QBHW_H GB, GHB EHD FDB FD ED CA CAH HCA JD, JDB DK, KD, KDB QPHW_H	**KDC** QBHW_H QPHW_H	**KDC** GB, GHB EHD FDB FD HFD ED EDH CA CAH HCA JD, JDB HJD DK, KD, KDB HKD	**LCL** BAB_H QBHW_H GB, GHB EHD FDB FD HFD ED EDH CA CAH HCA JD, JDB HJD DK, KD, KDB HKD HQP_H QPHW_H
500			**NB-P** JD, JDB KD, KDB, DK			
600			**HLD** GB, GHB* FD* ED JD, JDB KD, KDB, DK LD, LDB		**LDC** ED EDH	
800			**NB-P** KD, KDB, DK			
1200			**HND** ED			**NDC** ED EDH

* = Valid on 2 & 3 pole breakers only.
Not Valid For 1 Pole.

** = Valid on 15-20A
1 pole breakers only.

480/277V~ BREAKER/BREAKER

Main Breaker Maximum amperes	Series Equipment Rating - kA Symmetrical					
	22	25	35	65	100	150
100						**FCL** GHB
225		**FD** GHB		**HFD** GHB	**FDC** GHB	
250	**JD, JDB** GHB	**JD, JDB** GHB (15-50A)		**HJD** GHB (15-50A)	**JDC** GHB	
250					**LCL** GHBS**	
400	**KD, KDB** GHB	**HKD** GHB	**KD, KDB** GHB (15-50A)	**HKD** GHB (15-50A)	**KDC** GHB (15-50A)	**LCL** GHB

TABLE III

Katolight Service - Master Repair Manual - Page 4137

* = Valid on 2 & 3 pole breakers only.
Not valid for 1 pole.

480V~ BREAKER/BREAKER

Main Breaker Maximum amperes	Series Equipment Rating - kA Symmetrical					
	25	35	65	100	150
100				**FB-P** EHD FDB FD HFD	**FCL** EHD FDB FD HFD
200				**LA-P** EHD FDB FD HFD JD, JDB HJD	
225	**FD** EHD FDB		**HFD** EHD FDB FD	**FDC** EHD FDB FD HFD	
250	**JD, JDB** EHD FDB		**HJD** EHD FDB FD JD, JDB	**JDC** EHD FDB FD HFD JD, JDB HJD	
400		**KD, KDB** EHD FDB FD	**HKD** EHD FDB FD JD, JDB KD, KDB	**KDC** EHD FDB FD HFD JD, JDB HJD KD, KDB HKD	**LA-P** JD, JDB HJD KD, KDB HKD **LCL** EHD FDB FD HFD FDC JD, JDB HJD KD, KDB HKD
500				**NB-P** JD, JDB HJD KD, KDB HKD LC	
600		**LD, LDB** FD* JD, JDB	**HLD** FD* JD, JDB KD, KDB LD, LDB		
800				**NB-P** LC MC	

TABLE IV

Katolight Service - Master Repair Manual - Page 4138

600V~ BREAKER/BREAKER

TABLE V

Main Breaker Maximum amperes	Series Equipment Rating - kA Symmetrical					
	18	25	35	42	50	100
225	**FD** FDB	**HFD** FDB FD	**FDC** FDB FD HFD			
250	**JD, JDB** FDB	**HJD** FDB FD JD, JDB	**JDC** FDB FD HFD JD, JDB HJD			
400		**KD, KDB** FDB FD JD, JDB	**HKD** FDB FD HFD JD, JDB HJD	**KDC** FDB FD HFD	**KDC** JD, JDB HJD KD, KDB HKD	**LCL** FDB FD HFD FDC JD, JDB HJD JDC KD, KDB HKD KDC
600		**LD, LDB** FD JD, JDB	**HLD** KD, KDB LD, LDB			

Katolight Service - Master Repair Manual - Page 4139

120/240V~ FUSE / BREAKER

Main Fuse Maximum amperes	Series Equipment Rating - kA Symmetrical			
	100		200	
100			**R** BA, BAB, HQP QBHW, QPHW GB GHB	
200	**R** GB GHB		**J** BA, BAB, HQP QBHW, QPHW	**T** BA, BAB, HQP QBHW, QPHW
400	**J** BA, BAB, HQP QBHW, QPHW	**T** BA, BAB, HQP QBHW, QPHW	**J** GB GHB	**T** GB GHB

TABLE VI

For 1 & 2 Pole 120/240V~ Rated Breakers
(BABH, HQPH, QBHH, QPHH) See Table VI

240V~ FUSE / BREAKER

Main Fuse Maximum amperes	Series Equipment Rating - kA Symmetrical				
	100		200		
100			**R** BAB_H QBHW_H GB GHB CAH, HCA HQP_H QPHW_H		
200	**R** GB GHB CA		**J** BAB_H, HQP_H QBHW_H CA, QPHW_H CAH, HCA	**T** BAB_H, HQP_H QBHW_H CA, QPHW_H CAH, HCA	**R** GB* GHB*
400	**J** BAB_H QBHW_H HQP_H QPHW_H	**T** BAB_H QBHW_H HQP_H QPHW_H	**J** GB GHB	**T** GB GHB	
600		**T** CA CAH, HCA			
6000	**L** EHD FDB FD ED JD, JDB DK, KD, KDB				

TABLE VII

* = Valid on 2 & 3 pole breakers only.
Not valid for 1 Pole.

Katolight Service - Master Repair Manual - Page 4141

* = Valid on 2 & 3 Pole Breakers only.
Not Valid for 1 Pole.

480Y/277V~ FUSE / BREAKER

Main Fuse Maximum amperes	Series Equipment Rating - kA Symmetrical					
	65	100		200		
100		J GHBS	T GHBS		R GHB	
						T GHB
					J GHB	
200	J GHBS			R GHB		
	T GHBS					
400					J GHB	T GHB
600		J EHD* FD* HFD* FDC	T GHB* EHD* FD* HFD* FDC JD HJD JDC			

TABLE VIII

480V~ FUSE / BREAKER

Main Fuse Maximum amperes	Series Equipment Rating - kA Symmetrical					
	100			200		
100			R EHD			L MC HMC
200	J EHD FD HFD FDC	T EHD FD HFD FDC				
800						
1200			L MC HMC NC HNC			

TABLE IX

600V~ FUSE / BREAKER

Main Fuse Maximum amperes	Series Equipment Rating - kA Symmetrical				
	100		200		
100	J FD HFD FDC	T FD HFD FDC	R FD HFD FDC		
200	J FD HFD FDC	T FD JD HFD HJD FDC JDC	R JD HJD JDC		
400	J JD HJD JDC	T JD HJD JDC	R KD HKD KDC	R LC	
600			R LC	J KD HKD KDC LC	T KD HKD KDC LC
1200			L LC		

TABLE X

For 1 & 2 Pole 120/240V~ Rated Breakers
(BAB, HQP, QBH, QPH) See Table XII

TABLE XI

TRIPLE SERIES RATINGS 240V~

Main Fuse Class & Maximum amperes	Tenant Main Type	Branch Type	System Voltage	Short Circuit Series Rating (kA, Sym.)
L-6000	DK, KD, KDB	GB, GHB, EHD*	240	100
L-6000	DK, KD, KDB	CA, CAH, HCA	240	100
L-6000	DK, KD, KDB	FD*, FDB	240	100
L-6000	DK, KD, KDB	JD, JDB	240	100
L-6000	JD, JDB	GB, GHB	240	100
L-6000	FD	GB, GHB	240	100
L-6000	FD, FDB	BAB_H, QBHW_H HQP_H, QPHW_H	240	100
L-6000	EHD	BAB_H HQP_H	240	100

* = Valid on 2 & 3 Pole Breakers Only.
Not valid for 1 Pole.

Katolight Service - Master Repair Manual - Page 4145

TRIPLE SERIES RATINGS 120/240V~

Main Fuse Class & Maximum amperes	Tenant Main Type	Branch Type	System Voltage	Short Circuit Series Rating (kA, Sym)
L-6000	DK, KD, KDB	GB, GHB	120/240	100
L-6000	FD	GB, GHB	120/240	100
L-6000	JD, JDB	GB, GHB	120/240	100
L-6000	FD, FDB	BA, BAB HQP (15-70A)	120/240	100
L-6000	EHD	BA, BAB HQP	120/240	100

TABLE XII

NOTES

NOTES

NOTES

NOTES

Cutler-Hammer
Sumter, South Carolina U.S.A.

Effective 8/98 Style No.1C96944H02 Rev. E 27M/SPC
Printed in U.S.A./CCI

THOMSON TECHNOLOGY®
A Subsidiary of Regal-Beloit Corporation
POWER & CONTROL

TSC 800

TRANSFER SWITCH CONTROLLER

(WITH REMOTE COMMUNICATION OPTION)

INSTALLATION, OPERATING & SERVICE MANUAL

Software Version 1.7



PM049 REV 6 02/04/04

9087A – 198th Street, Langley, BC Canada V1M 3B1 • Telephone (604) 888-0110
Telefax (604) 888-3381 • E-Mail: info@thomsontechnology.com • www.thomsontechnology.com

TABLE OF CONTENTS

1. INTRODUCTION 1
   1.1. PRODUCT REVISION HISTORY 1
2. INSTALLATION 2
   2.1. GENERAL INFORMATION 2
   2.2. NOTES TO INSTALLER 2
   2.3. MOUNTING LOCATION/INSTALLATION 3
   2.4. AC VOLTAGE SENSING INPUT 3
   2.5. AC CONTROL POWER INPUT 4
   2.6. FOUR POSITION TEST SWITCH INPUTS (FTS4) 4
   2.7. OUTPUTS 5
   2.8. EXTERNAL PANEL CONTROL WIRING 7
   2.9. REMOTE START CONTACT FIELD WIRING 7
   2.10. COMMMUNICATION CABLE 7
   2.11. FACEPLATE MOUNTING DIMENSIONS 8
   2.12. DIELECTRIC TESTING 9
3. DESCRIPTION 10
   3.1. LEXAN FACEPLATE 11
      3.1.1. LAMP TEST 11
   3.2. PRINTED CIRCUIT BOARD 12
      3.2.1. VOLTAGE SELECTION 13
      3.2.2. TERMINAL BLOCKS 13
      3.2.3. DIAGNOSTIC LED'S 13
      3.2.4. COMMUNICATION PORT 14
      3.2.5. CONTRAST ADJUSTMENT 14
4. REMOTE COMMUNICATION OPTION 14
5. TSC 800 DISPLAY MENUS 17
   5.1. SYSTEM TIME MENU 17
   5.2. MANUAL TEST MENU 18
   5.3. TSC 800 PROGRAM MENU 18
   5.4. SYSTEM STATUS MENU 19
   5.5. TIMER COUNTDOWN MENUS 21
   5.6. UTILITY SUPPLY MENU 21
   5.7. GENERATOR SUPPLY MENU 22
6. OPERATING INSTRUCTIONS 23
   6.1. DISPLAY MENUS 23

Katolight Service - Master Repair Manual - Page 4155

6.2. TESTING INSTRUCTIONS 23
6.3. TIME CLOCK ADJUSTMENT 24
7. PROGRAMMING INSTRUCTIONS 24
7.1. EXERCISE TIMER 26
7.1.1. AUTO TEST START DAY 26
7.1.2. AUTO TEST START HOUR 26
7.1.3. AUTO TEST START MINUTE 26
7.1.4. AUTO TEST STOP DAY 26
7.1.5. AUTO TEST STOP HOUR 26
7.1.6. AUTO TEST STOP MINUTE 27
7.1.7. AUTO TEST MODE 27
7.2. SYSTEM CONFIGURATION 27
7.2.1. NODE ADDRESS 27
7.2.2. SYSTEM VOLTAGE 27
7.2.3. VOLTAGE SENSING RATIO 27
7.2.4. SYSTEM FREQUENCY 27
7.2.5. SYSTEM PHASES 28
7.3. VOLTAGE SENSING 28
7.4. FREQUENCY SENSING 30
7.5. TIME DELAYS 32
7.6. VOLTAGE SENSING CALIBRATION 38
7.6.1. GENERAL 38
7.6.2. UTILITY VOLTAGE CALIBRATION 39
8. TSC 800 PROGRAMMING DATA SHEETS 41
9. MAIN MENU PROGRAMMING SHEET 42
10. CALIBRATION DATA SHEET 43
11. TSC 800 TYPICAL CONNECTION DIAGRAM 44
12. TSC 800 SPECIFICATIONS 45
13. TROUBLESHOOTING 46
14. NOTES 48

Katolight Service - Master Repair Manual - Page 4156

1. INTRODUCTION

1.1. PRODUCT REVISION HISTORY

The following information provides an historical summary of changes made to this product since the original release.

Software Version

1.7 02/04/01	Revised Transfer Fail Features and functionality
1.6 98/12/15	Added Remote Communication
1.5 n/a	Unreleased version
1.4 98/06/15	Updated Transfer Fail operation
1.3 98/01/19	Updated default under/over frequency setpoints, transfer fail programmability, minor logic revisions
1.2 97/10/10	Changed Transfer Switch fail timer to 30 seconds
1.1 97/01/30	Upgraded Frequency setting range
1.0 96/06/30	Original version

Operating & Service Manual Version

Rev 6 02/04/15	Changes for Version 1.7 TSC 800 Software
Rev 5 00/07/31	Added Four Position Test Switch Information
Rev 4 00/03/01	General revisions
Rev 3 99/02/12	Added Multi-tap information.
Rev 2 98/12/01	Added Remote Communication features per version 1.6 TSC 800 Software
Rev 1 98/01/21	General Revisions for upgraded TSC 800 software
Rev 0 97/06/04	Original release

Contact Thomson Technology Inc., to obtain applicable instruction manuals. Soft copy of most current version is available at www.thomsontechnology.com.

Katolight Service - Master Repair Manual - Page 4157

2. INSTALLATION

2.1. GENERAL INFORMATION

NOTE:
Installations should be done in accordance with all applicable electrical regulation codes as required.

The following installation guidelines are provided for general information only pertaining to typical site installations. For specific site installation information, consult Thomson Technology Inc. as required. **Note:** Factory installations of TTI supplied transfer switches that have been tested and proven may deviate from these recommendations.

2.2. NOTES TO INSTALLER

If the transfer switch has programmable/multi-tap system voltage capability (refer to electrical schematic), confirm the transfer switch has been configured for the system voltage.

WARNING
Failure to confirm and match transfer switch voltage with the system voltage could cause serious equipment damage.

If the transfer switch requires reconfiguring, the TSC 800 controller will require reprogramming as well.

CAUTION!!!
All installation and/or service work performed must be done by qualified personnel only. Failure to do so may cause personal injury or death.

Katolight Service - Master Repair Manual - Page 4158

2.3. MOUNTING LOCATION/INSTALLATION

The TSC 800 transfer controller is designed for mounting directly onto a transfer switch door. Considerations should be given for the following:

The controller should be installed in a dirt free, dry location away from extreme heat sources.

The LCD window should be installed at an optimum height for operator viewing.

Adequate space should be provided around the rear of the TSC 800 circuit board for control wiring.

Verify that the intended AC voltage input to the controller does not exceed the maximum allowable level on the control panel door as per the applicable control panels certification standard.

The TSC 800 controller can be installed onto a door of a transfer switch using two different methods:

- The first method requires a special door cutout for the LCD display and LED's as shown in FIGURE 5. This mounting method requires the Lexan faceplate to be mounted directly onto the door of the transfer switch enclosure via its adhesive tape on the rear of the Lexan. The controller must be disassembled to mount on the door, then re-assembled.
- The second method of controller mounting requires a factory supplied adapter faceplate as shown in FIGURE 6. This method only requires a simple large rectangular hole to be cut out of the door as shown in FIGURE 6(a). The controller is then inserted into this hole and the faceplate is mounted on top of the door with studs as supplied with the faceplate. Note: #8-32 AWG nuts will be required to attach the faceplate to the door.

2.4. AC VOLTAGE SENSING INPUT

The TSC 800 can accept direct AC voltage sensing inputs on the generator and utility supplies from 120-600Vac (nominal). **Note:** Direct input voltage sensing can only be used when the system utilizes a 3 phase, 4 wire distribution system which has the neutral conductor *solidly* grounded. For 3 phase, 3 wire systems (i.e. no neutral) or high voltage systems, potential transformers must be used. Refer to FIGURES 1-4 for voltage sensing connections.

Katolight Service - Master Repair Manual - Page 4159

2.5. AC CONTROL POWER INPUT

The TSC 800 is factory supplied for either 115Vac or 230Vac (nominal) control power input voltage. Independent AC control power is required from both utility and generator supplies. AC control power is utilized for internal TSC 800 control circuits and external control device loads. The TSC 800 requires approximately 12VA AC power for internal control circuits. The maximum external load is limited by output contact ratings (i.e. 10A resistive, 120VAC). Total AC control power requirements for each supply must be determined by adding both internal and external load requirements.

2.6. FOUR POSITION TEST SWITCH INPUTS (FTS4)

The function of the Four Position Test Switch Input is to allow operators to select various operating scenarios for test or maintenance purposes, inaddition to the use of the faceplate mounted pushbuttons.

NOTE: When an external FTS4 switch is used, the TSC 800 operation as selected from the faceplate pushbuttons will be overridden.

OFF: Disables the engine start output from the transfer switch. If the primary source is available, and within normal limits, the TSC 800 will initiate a transfer to the primary source. The transfer switch will not automatically transfer to the secondary (alternate) source should the primary source fail.

AUTO: All automatic functions are enabled.

ENGINE START: (No load test) An engine start signal will be initiated and will remain on until the FTS4 is placed in another position. The engine will start if the engine's auto start controller is in the "Auto" mode. If the primary source fails in this mode, and the secondary source is within parameters, the TSC 800 will initiate a transfer to the secondary source.

TEST: (Full load test) A primary source failure is simulated and an engine start signal will be initiated. When the secondary source is within normal limits, the TSC 800 will initiate a transfer to the secondary source. The system will remain in this state until the FTS4 is placed in another position or the secondary supply fails. Upon a secondary supply failure, if the primary supply is available, the TSC 800 will initiate a transfer to the primary supply.

Katolight Service - Master Repair Manual - Page 4160

2.7. OUTPUTS

The TSC 800 provides the following types of output circuits:

Engine Start Contact	Isolated Form C contact (10A, 120VAC Resistive)
Programmable Output Contact	Isolated Form C contact (10A, 120VAC Resistive)
Transfer to Utility Output	120VAC[1], 10A (Resistive) powered output contact
Transfer to Generator output	120VAC[1], 10A (Resistive) powered output contact
Pre/post-transfer to utility	120VAC[1], 3A (Resistive) powered output contact
Pre/post-transfer to generator	120VAC[1], 3A (Resistive) powered output contact
Load on utility	120VAC[1], 3A (Resistive) powered output contact
Load on generator	120VAC[1], 3A (Resistive) powered output contact

[1] **Note:** Output voltage is dependent upon AC control power input voltage (i.e. 120VAC or 230VAC nominal).

Interposing relays are required between the TSC 800 outputs and the end device if loads exceed the output current rating.

Transient suppression devices are required for all inductive devices sharing wiring or if physically located near the transfer switch controller.

For AC operated relays or solenoids, use a suitably rated metal oxide varistor (MOV) or capacitor/resistor suppressor.

Katolight Service - Master Repair Manual - Page 4161

TSC 800

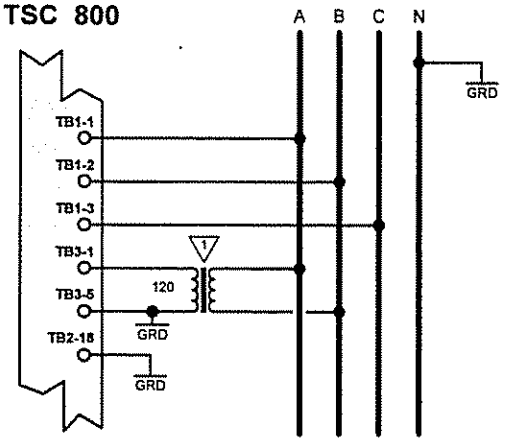

VOLTAGE INPUTS

600VAC L-L, 347VAC L-N
480VAC L-L, 277VAC L-N
380VAC L-L, 220VAC L-N
208VAC L-L, 120VAC L-N

1 PT REQUIRED FOR TRANSFER SWITCH MECHANISM POWER (MUST BE SIZED TO SUIT POWER REQUIREMENTS).

FIG:1
3Ø, 4W 208/380/480/600VAC DIRECT SENSING

NOTE: UTILITY VOLTAGE SENSING AND CONTROL POWER SHOWN ONLY.

TSC 800

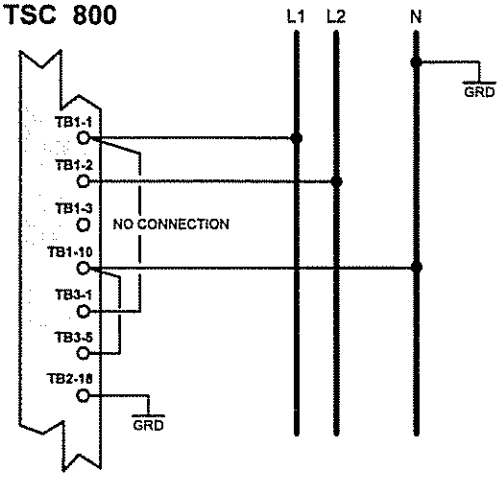

VOLTAGE INPUTS

240VAC L-L, 120VAC L-N

FIG:2
1Ø, 3W 120/240VAC DIRECT SENSING

NOTE: UTILITY VOLTAGE SENSING SHOWN ONLY.

TSC 800

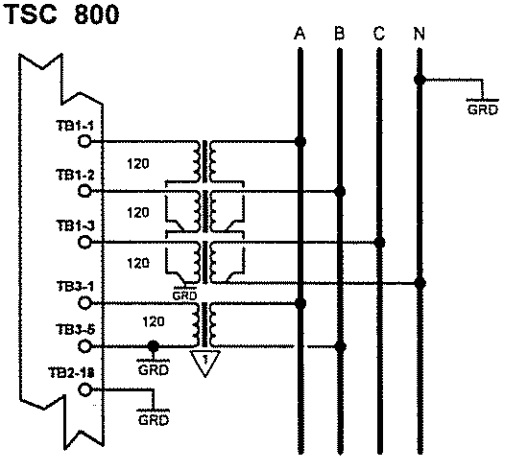

SECONDARY PT VOLTAGE

208VAC L-L, 120VAC L-N
120VAC L-L, 69VAC L-N

1 PT REQUIRED FOR TRANSFER SWITCH MECHANISM POWER (MUST BE SIZED TO SUIT POWER REQUIREMENTS).

FIG:3
3Ø, 4W WYE PT's

NOTE: UTILITY VOLTAGE SENSING SHOWN ONLY.

TSC 800

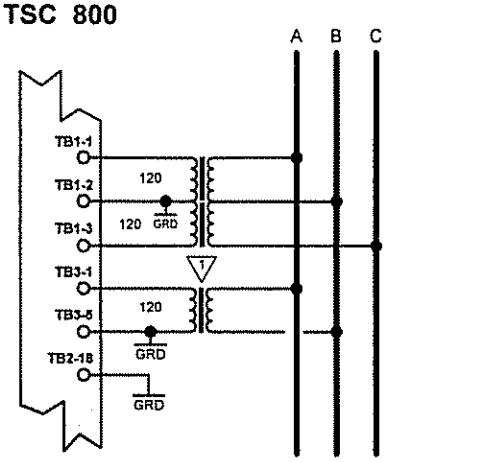

SECONDARY PT VOLTAGE

120VAC L-L [NO NEUTRAL]

NOTE: ØB IS GROUNDED

1 PT REQUIRED FOR TRANSFER SWITCH MECHANISM POWER (MUST BE SIZED TO SUIT POWER REQUIREMENTS).

FIG:4
3Ø, 3W DELTA PT's

NOTE: UTILITY VOLTAGE SENSING SHOWN ONLY.

G:\ENGINEER\PRODUCTS\TSC800\852619.VSD

REVISED 97/06/27 09:12 AM

Katolight Service - Master Repair Manual - Page 4162

2.8. EXTERNAL PANEL CONTROL WIRING

As a minimum, all control wiring shall conform to the local regulatory authority on electrical installations. Specific wire sizes for typical circuits (of distances up to 100ft (30m)[1]) are as follows:

Utility or Generator Voltage Sensing	#14 AWG (2.5mm^2)
Transfer output signals	#14 AWG (2.5mm^2)
Remote Start Contact for Engine Controls	#14 AWG (2.5mm^2)

[1] For distances exceeding 100 ft. (30m) consult Thomson Technology Inc.

2.9. REMOTE START CONTACT FIELD WIRING

Field wiring of a remote start contact from a transfer switch to a control panel should conform to the following guidelines to avoid possible controller malfunction and/or damage.

2.9.1. Remote start contact wires (2 #14 AWG (2.5mm^2)) should be run in a separate conduit.

2.9.2. Avoid wiring near AC power cables to prevent pick-up of induced voltages.

2.9.3. An interposing relay may be required if field wiring distance is excessively long (i.e. greater than 100 feet (30m)) and/or if a remote contact has a resistance of greater than 5.0 ohms.

2.9.4. The remote start contact must be voltage free (i.e. dry contact). The use of a "powered" contact will damage the transfer controller.

2.10. COMMMUNICATION CABLE

Communication cable wiring from the controller's com port must be suitably routed to protect it from sources of electrical interference. Guidelines for protection against possible electrical interference are as follows:

- Use high quality, 8 conductor shielded cable only with drain wire grounded at the controller end only.
- Route the communication cable at least 3 M (10') away from sources of electrical noise such as variable speed motor drives, high voltage power conductors, UPS systems, transformers, rectifiers etc.
- Use separate, dedicated conduit runs for all communication cables. Do not tightly bundle communication cables together in the conduit. Conduit should be ferromagnetic type near sources of possible electrical interference. The entire length of conduit should be grounded to building earth ground.

Katolight Service - Master Repair Manual - Page 4163

- When communication cables must cross over low or high voltage AC power conductors, the communication cables must cross at right angles and not in parallel with the conductors.

For additional information on protection against electrical interference, contact TTI factory.

2.11. FACEPLATE MOUNTING DIMENSIONS

Refer to FIGURE 5 for the TSC 800 faceplate mounting dimension information.

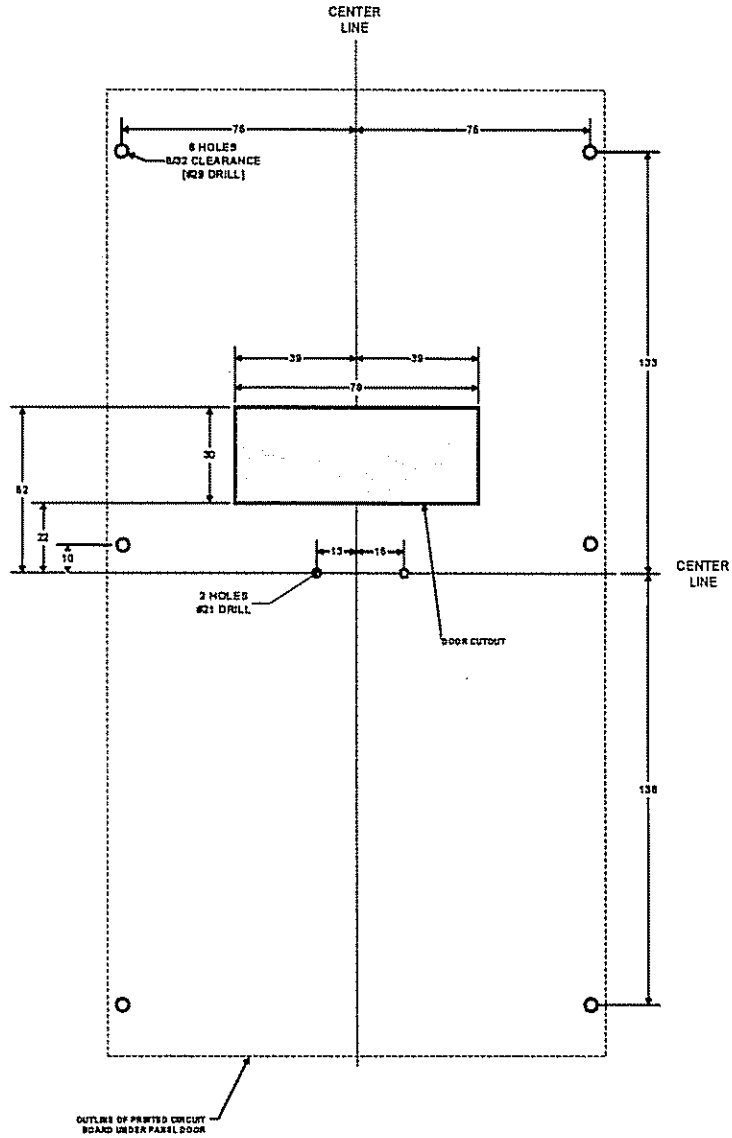

FIGURE 5
REFER TO:
G:\ENGINEER\PRODUCTS\TSC800\85611.VSD

Katolight Service - Master Repair Manual - Page 4164

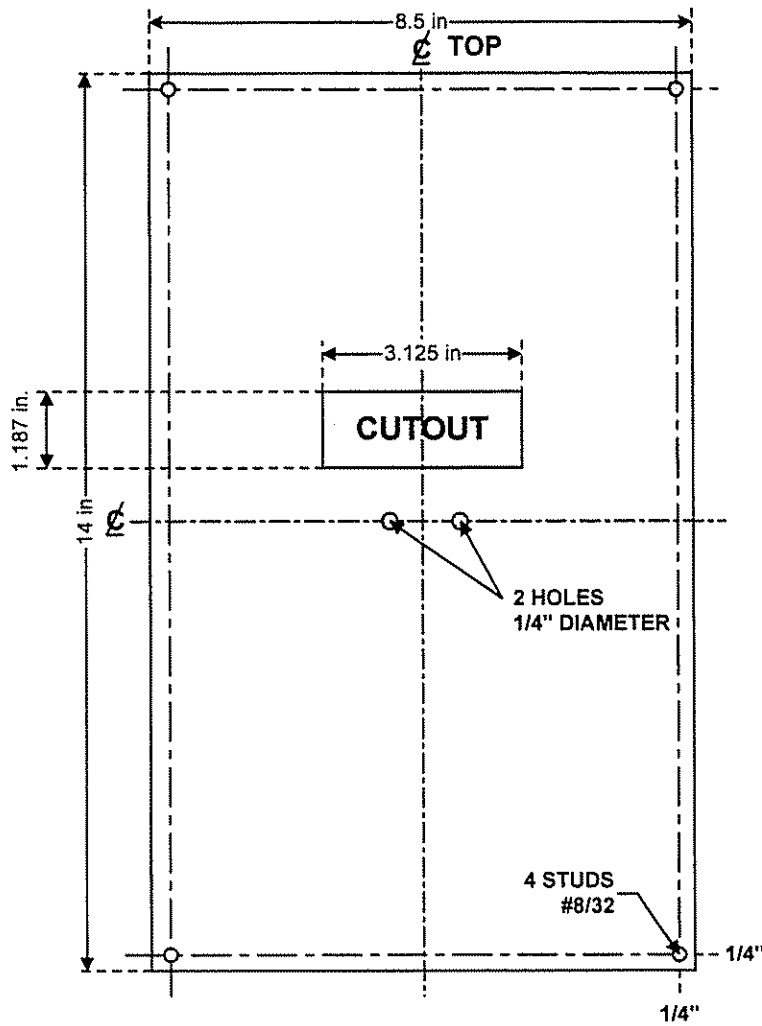

FIGURE 6: ADAPTER FACEPLATE

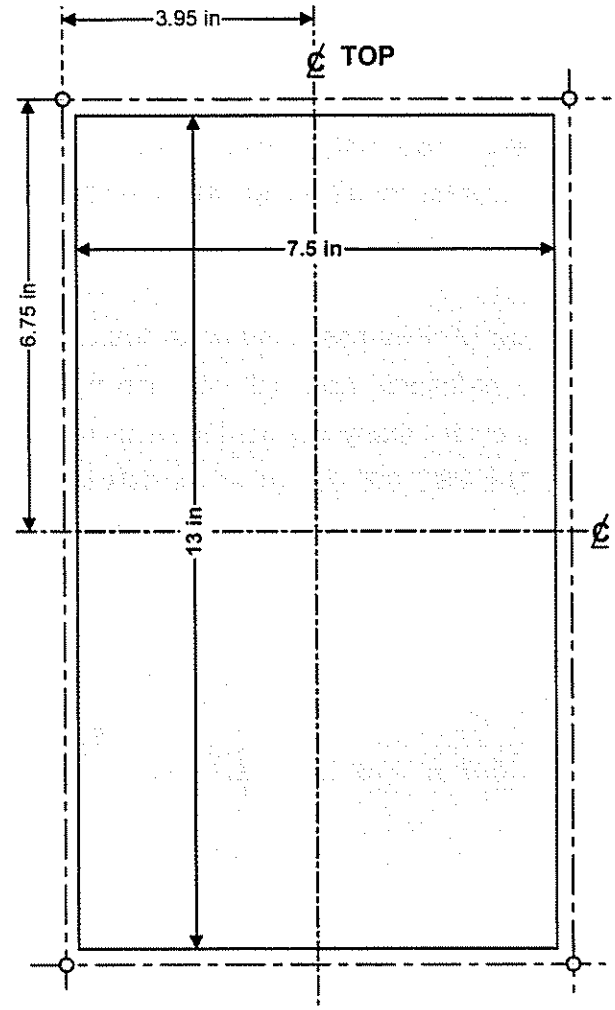

FIGURE 6(a):
DOOR CUTOUT FOR ADAPTER FACEPLATE

G:\ENGINEER\PRODUCTS\TSC800\852620.VSD DRAWING SCALE = .333:1

2.12. DIELECTRIC TESTING

Do not perform any high voltage dielectric testing on the transfer switch with the TSC 800 controller connected into the circuit as serious damage will occur to the controller. All AC control fuses or control circuit isolation plugs connected to the TSC 800 must be removed if high voltage dielectric testing is performed on the transfer switch.

Katolight Service - Master Repair Manual - Page 4165

3. DESCRIPTION

The TSC 800 controller utilizes microprocessor-based design technology which provides high accuracy for all voltage sensing and timing functions. The **TSC 800** is factory configured to control all the operational functions and display features of the automatic transfer switch. All standard and optional control features of the **TSC 800** are fully programmable from the front panel LCD display and are security password protected. The LCD display screen prompts are in plain English, providing a user-friendly operator interface with many display options available. The microprocessor design provides many standard features which were previously only available as add-on optional features.

The TSC 800 controller consists of two parts; a Lexan faceplate which is mounted externally on the transfer switch door, and a printed circuit board (PCB) which is mounted inside the transfer switch door.

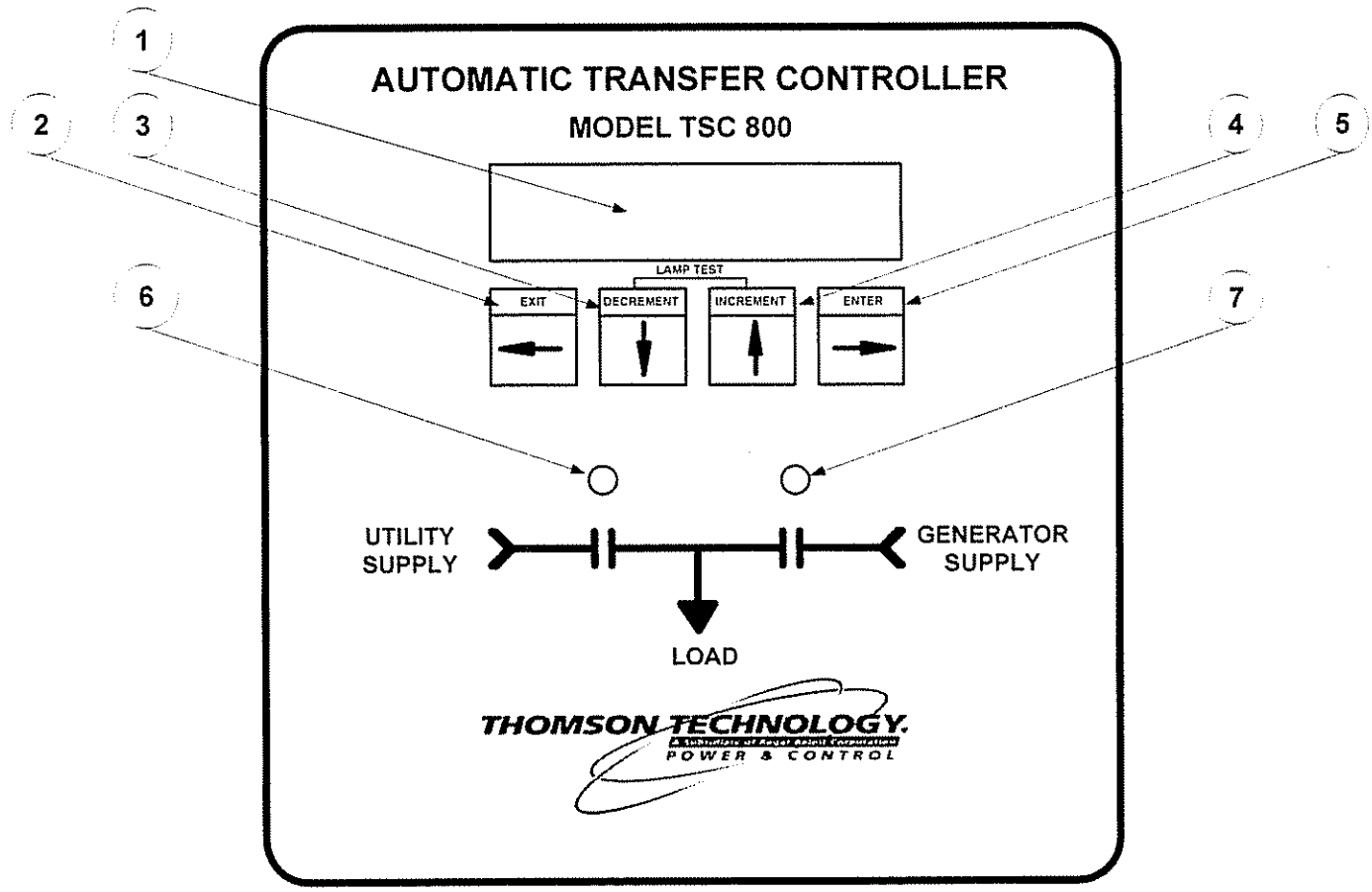

FIGURE 7

Katolight Service - Master Repair Manual - Page 4166

3.1. LEXAN FACEPLATE

The Lexan faceplate is shown as in FIGURE 7. The Lexan pushbuttons are connected to the main PCB via plug-in ribbon cable. The main features of the Lexan faceplate are described as follows with reference to FIGURE 7.

① LCD viewing window. The LCD display is mounted on the main PCB which is visible from the lexan faceplate.

② EXIT push-button. The EXIT function is used to scroll backwards through the status menus or programming prompts to the previous item. The EXIT function is used to "exit" the programming menu by holding this button down for approximately 2 seconds while in the programming mode.

③ DECREMENT push-button. The DECREMENT function is used to change a programming value while in the programming mode. When this push-button is held down, the displayed value will be "decremented" to a lower value as desired. Note: The longer the push-button is held down, the faster the value will be decremented.

④ INCREMENT push-button. The INCREMENT function is used to change a programming value while in the programming mode. When this push-button is held down, the displayed value will be "incremented" to a higher value as desired. Note: The longer the push-button is held down, the faster the value will be incremented.

⑤ ENTER push-button. The ENTER function is used to scroll forwards through the status menus or programming prompts to the next item. The ENTER function is used to "enter" a programming or test mode as well as accepting changed programming values. **Note:** In the programming mode, the longer the ENTER push-button is held down, the faster the next menu prompt will appear.

⑥ Load on Utility supply LED light viewing window

⑦ Load on Generator supply LED light viewing window

3.1.1. LAMP TEST

A lamp test feature is provided to test all LED lights as well as the LCD display. To activate the lamp test feature, simultaneously push the INCREMENT and DECREMENT push-buttons. All LED's and LCD display should illuminate for approximately 2 seconds then return to their original status.

Katolight Service - Master Repair Manual - Page 4167

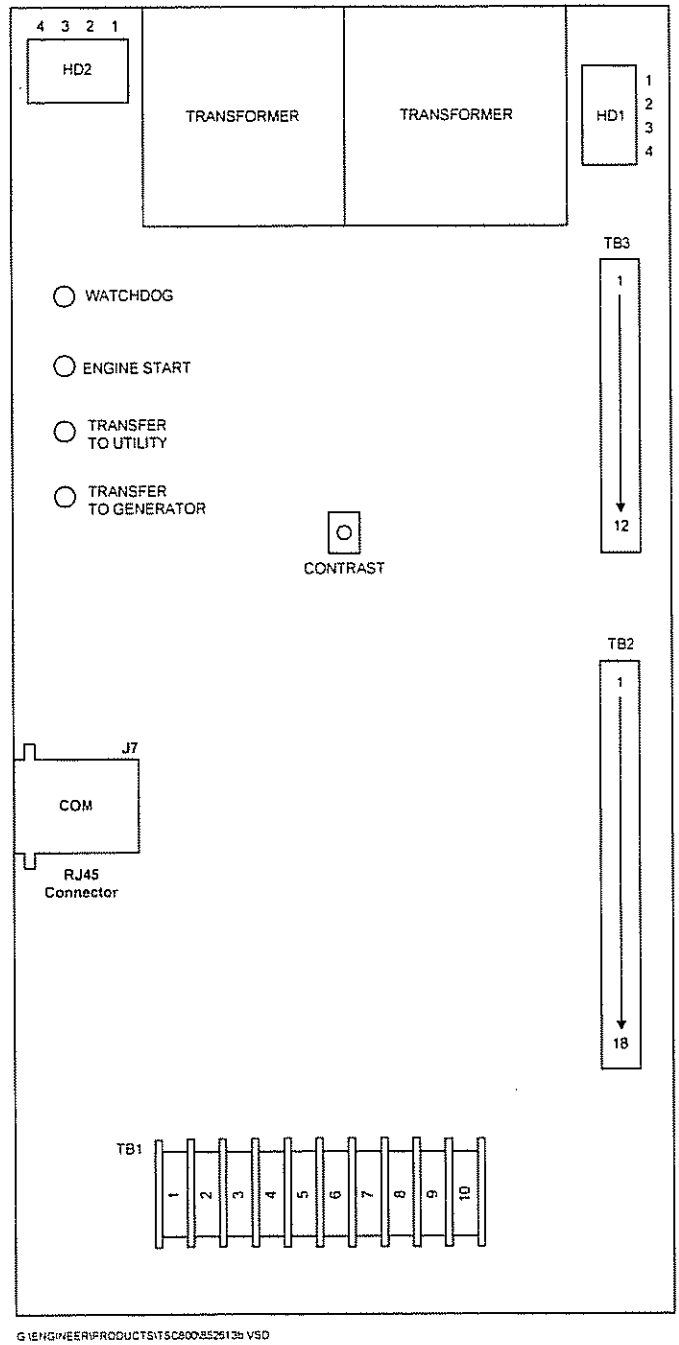

G:\ENGINEER\PRODUCTS\TSC800\8525135 VSD

FIGURE 8

3.2. PRINTED CIRCUIT BOARD

The printed circuit board (PCB) is shown in FIGURE 8. The PCB contains the following user interface items:

Katolight Service - Master Repair Manual - Page 4168

3.2.1. VOLTAGE SELECTION

The voltage selection is made via two connector plugs which are located on the PCB and are identified as HD1 and HD2. A different plug assembly is required for a voltage change.

The TSC 800 is factory configured for a specific power supply voltage input as designated by voltage header plugs labeled as follows:

115V - designates a 115V power supply input voltage

230V - designates a 230V power supply input voltage

3.2.2. TERMINAL BLOCKS

Three terminal blocks are located on the PCB as follows:

TB1 high voltage sensing terminal block (120-600VAC)

WARNING

Voltage sensing circuits are capable of lethal voltages while energized. Standard safety procedures should be followed and be performed by qualified personnel only. Failure to do so may cause personnel injury and/or death.

TB2 transfer control terminal block for output contacts and low voltage inputs

TB3 transfer control terminal block for 115/230v input and output circuits

3.2.3. DIAGNOSTIC LED'S

The TSC 800 controller provides four diagnostic LED lights which are mounted on the rear of the printed circuit board as per FIGURE 8. Their functions are described as follows:

WATCHDOG	This LED flashes on and off at irregular intervals which indicates that the microprocessor is functioning normally.
TRANSFER TO UTILITY	This LED is illuminated whenever the TSC 800 is initiating a Transfer to Utility signal.
TRANSFER TO GEN	This LED is illuminated whenever the TSC 800 is initiating a Transfer to Generator signal.
ENGINE START	This LED is illuminated whenever the TSC 800 is initiating a Engine Start signal.

Note: All LED's will be illuminated whenever a lamp test function is performed.

Katolight Service - Master Repair Manual - Page 4169

3.2.4. COMMUNICATION PORT

A communication port is provided to interconnect to a remote communication system for remote monitoring and control of the transfer switch. Refer to section 3 for additional information.

3.2.5. CONTRAST ADJUSTMENT

A contrast adjustment potentiometer is located on the PCB and is factory set for ambient temperatures of 15° to 30° Celsius. For different ambient temperatures, consult the factory for adjustment procedures.

4. REMOTE COMMUNICATION OPTION

The TSC 800 transfer switch controller is available with an optional remote communication feature. The remote communication feature allows a TSC 800 controller to be monitored and controlled from a remote location via serial communication link to a personal computer (PC). PC's may be connected locally via serial communication cable to the TSC 800 or remotely via modem and telephone systems. Remote communication can be via customer supplied equipment or with an external communication interface module (CIM) as manufactured by Thomson Technology Inc.

NOTE:

The CIM module may be located in the engine control panel provided the maximum distance between the CIM and TSC 800 controller is not exceeded as per the following information. Refer to the installation section of this manual for further information.

The CIM module utilizes an internal modem and contains Modbus™ protocol to interface with different remote monitoring software programs. Refer to separate literature for detailed information on the CIM module. The TSC 800 remote communication option must be ordered and be factory enabled prior to shipment. The communication feature cannot be user enabled once shipped from the factory.

The TSC 800 communication port utilizes a RS422 data transmission signal which is directly interconnected to the CIM module via 8 conductor, shielded cable with plug-in RJ45 connectors. Refer to FIGURES 9 & 10 for detailed information on direct connected or remote connected PC applications with CIM module.

™ Trademarks belong to their respective parties.

Ratolight Service - Master Repair Manual - Page 4170

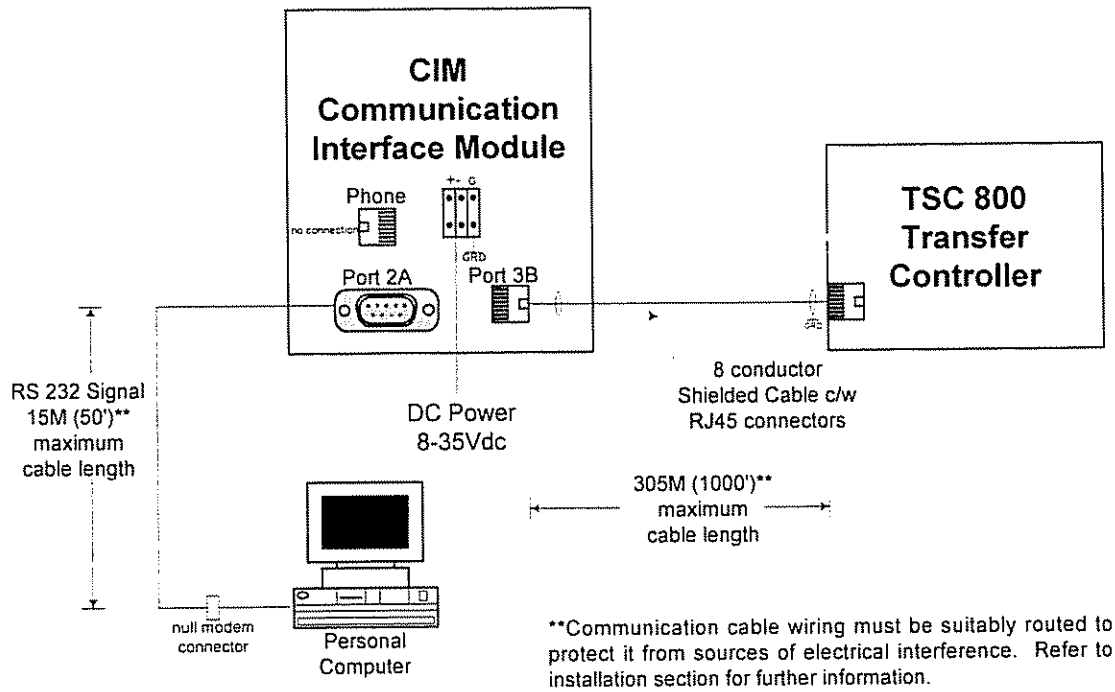

FIGURE #9 TSC 800 WITH CIM MODULE & DIRECT CONNECTED PC (RS232)

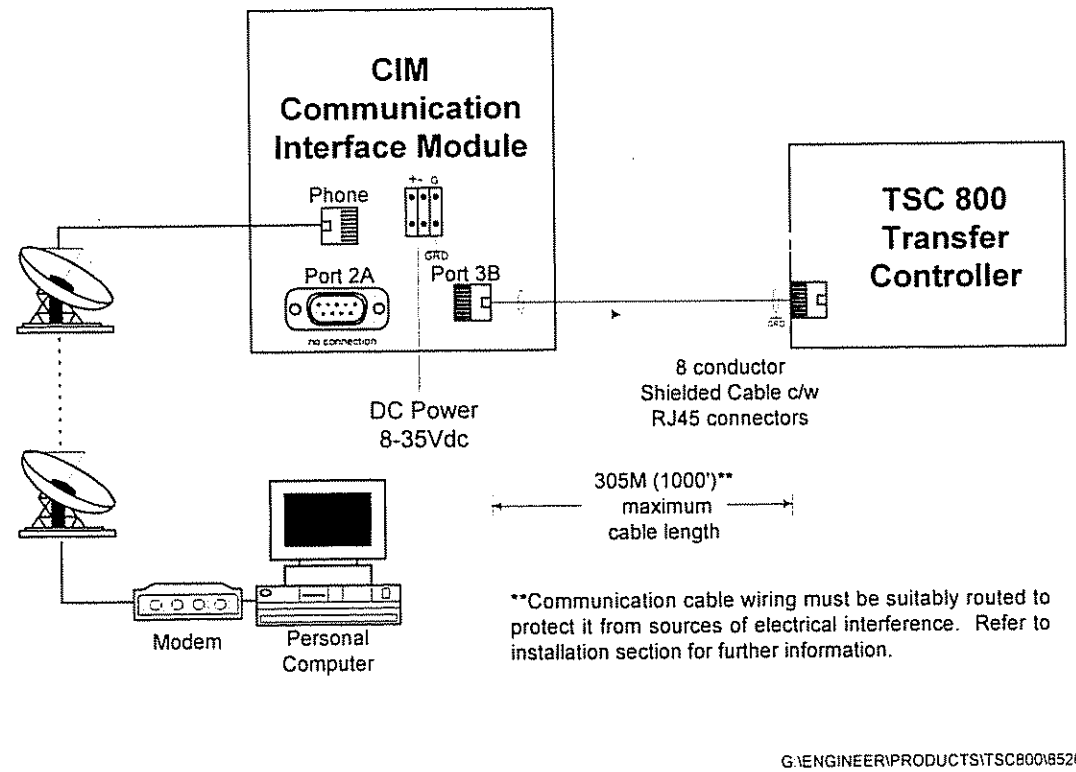

FIGURE #10 TSC 800 WITH CIM MODULE & REMOTE CONNECTED PC

Katolight Service - Master Repair Manual - Page 4171

The TSC 800 RS422 communication port allows multiple TSC 800 controllers to be directly interconnected together to form a single network system. Up to 10 TSC 800 controllers may be interconnected to a single CIM module.

NOTE:

TSC 800 controllers and MEC 20 engine/generator controllers may be interconnected together via the same communication network provided the maximum number of controllers and interconnection distances are not exceeded. For additional information, refer to associated product instruction manuals.

Each TSC 800 controller is programmed with an unique communication node address number for the remote communication system to reference. The network system may be connected to a local PC or to a remote PC via telephone system and CIM module. Refer to FIGURE #11 for a typical TSC 800 network system with CIM module.

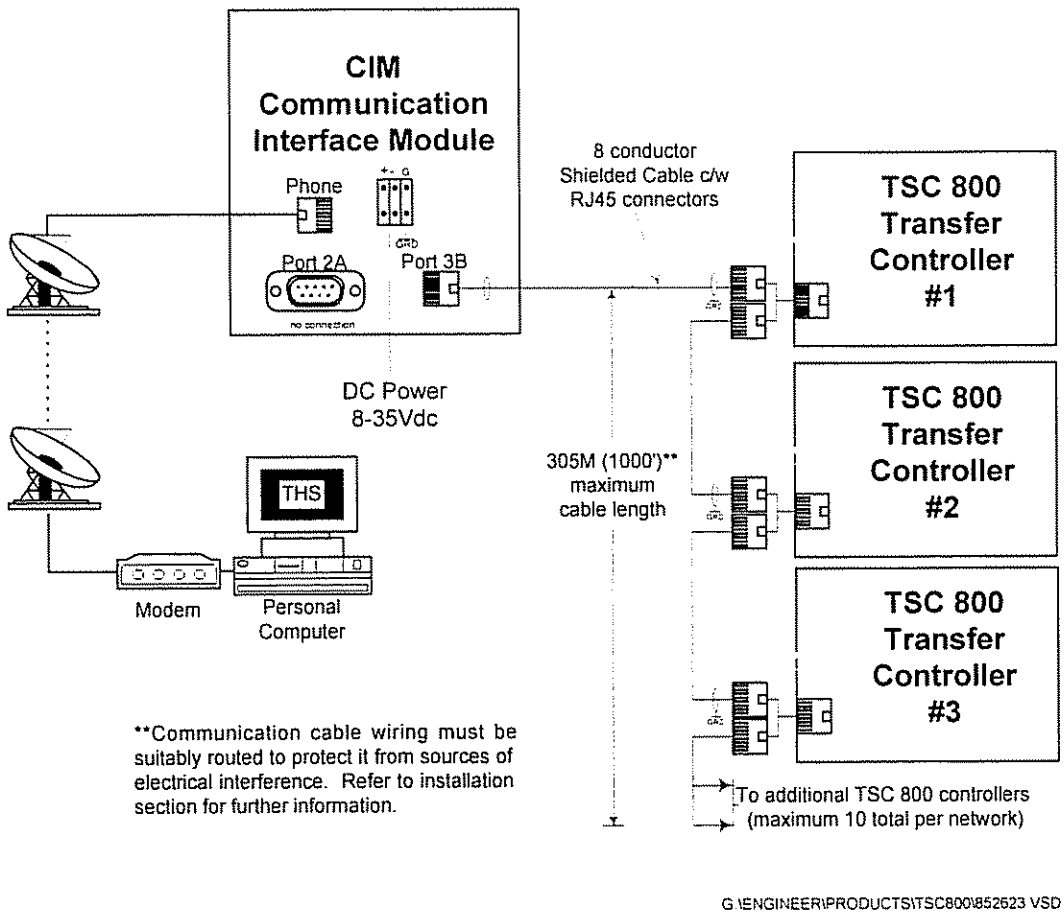

FIGURE #11 NETWORKED TSC 800 INTERCONNECTION DIAGRAM

Katolight Service - Master Repair Manual - Page 4172

5. TSC 800 DISPLAY MENUS

The TSC 800 contains a Liquid Crystal Display (LCD) which is visible on the front faceplate. The LCD has preprogrammed display menus which may be selected by pressing the *ENTER* or *EXIT* push-buttons in succession until the desired menu is displayed. The display menu types and order in which they are programmed are as follows:

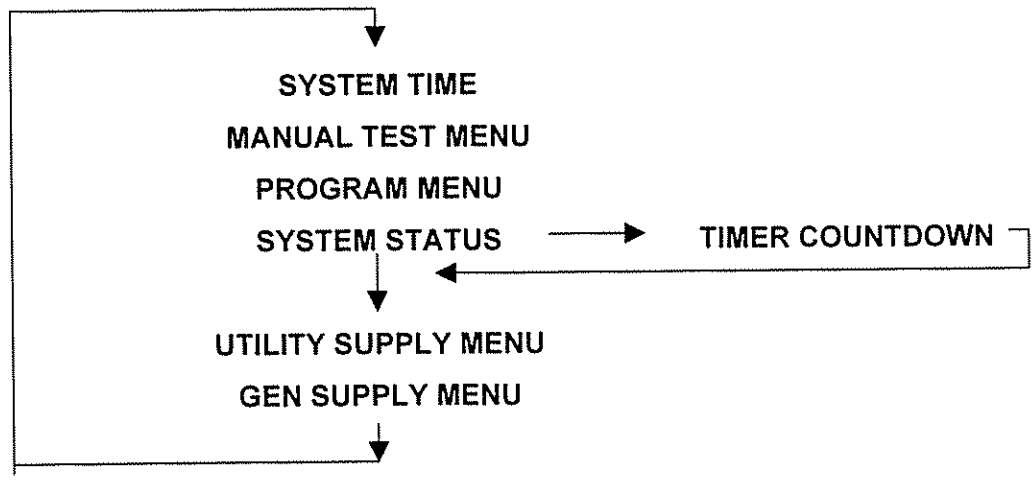

5.1. SYSTEM TIME MENU

The system time menu is used to show current system time. The TSC 800 controller uses its internal time clock to reference when an automatic exercising operation (if pre-programmed) is to occur. To change the system time, refer to the "time clock adjustment" section of this manual.

LCD DISPLAY

SYSTEM TIME
MON① 12:24:31②

① Displays the day of the week

② Displays the current time in hours (24-hour clock): hour: min: seconds

Katolight Service - Master Repair Manual - Page 4173

5.2. MANUAL TEST MENU

The Manual Test Menu may be selected to initiate a specific type of generator testing operation.

The test sub-menus are organized as follows:

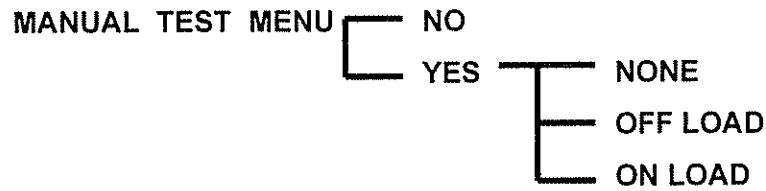

LCD DISPLAY

MAN TEST MENU
NO①

① Displays two messages which may be toggled between *YES* or *NO* by pressing the *INCREMENT* push-button. Their functions are described as follows:

- **NO** Testing operation menu is disabled when NO is displayed.
- **YES** Testing operation menu is enabled when YES is displayed and entered.

The following Test Mode options are provided:

NONE Testing operation is disabled when the NONE prompt is selected. To terminate a previously-set testing mode, select NONE and enter.

OFF LOAD When OFF LOAD prompt is selected and entered, the generator will immediately start and operate off load and will not permit a load transfer. **Note:** If the utility supply fails during this test mode, the generator will transfer on load. The generator will remain running until a different test mode is selected and entered.

ON LOAD When the ON LOAD prompt is selected and entered, the generator will immediately start and transfer on load. The generator will remain on load until a different test mode is selected and entered.

5.3. TSC 800 PROGRAM MENU

The programming menu is used to access the TSC 800's programmable functions such as time delays, voltage/frequency setpoints, calibration and time clock adjustments.

Katolight Service - Master Repair Manual - Page 4174

Access to the programming sub-menus can only be obtained with a security password number. The sub menus are organized as follows:



LCD DISPLAY

PROGRAM MENU
NO①

① Displays two messages which may be toggled between YES or NO by pressing the *INCREMENT* push-button. Their functions are described as follows:

- **NO** Programming sub-menus are disabled when NO is displayed.
- **YES** Programming sub-menus are enabled when YES is displayed.

5.4. SYSTEM STATUS MENU

The system status menu provides the operator with information as to current status of both the utility and generator supplies.

NOTE:
The system status menu screen may be momentarily replaced with a time delay countdown screen when a transfer sequence is initiated. The display will automatically return to the previous menu following expiry of the timing sequence.

The system status sub-menus are organized as follows:

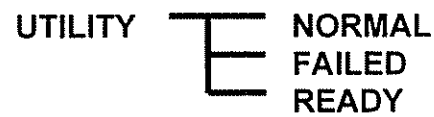

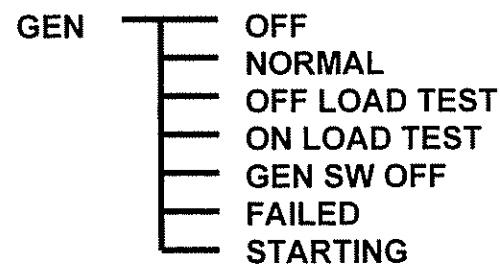

Katolight Service - Master Repair Manual - Page 4175

LCD DISPLAY



① Displays utility supply status conditions. There are three status conditions:

NORMAL Load is on the utility supply and the utility's voltage and frequency is normal.

FAILED Utility supply voltage and/or frequency is outside the nominal programmed limits(i.e. failed condition).

READY Load is on the generator supply and the utility supply is ready to transfer. This is a temporary condition due to either a test mode being selected or during a utility return time delay.

② Displays generator supply status conditions. There are seven status conditions as follows:

OFF Load is on the utility supply and the generator is off, ready to start upon utility failure condition.

NORMAL The generator is running due to a failed utility supply.

OFF LOAD TEST The generator is running off load due to manually initiated test mode via the front-panel push-buttons or exercise timer mode.

ON LOAD TEST The generator is running on load due to a manually initiated test mode via the front panel push-buttons or an automatic test mode as programmed in the time clock exercising menu.

GEN SW OFF The four position test switch has been set to the OFF position, disabling generator starting and transferring operation.

FAILED Generator is signaled to operate, however its voltage and/or frequency is outside the nominal programmed limits (i.e. failed condition).

STARTING Engine start signal has been initiated, and the TSC 800 sensors are waiting for generator voltage to build up.

Katolight Service - Master Repair Manual - Page 4176

5.5. TIMER COUNTDOWN MENUS

Timer countdown menus are automatically displayed when a specific time delay function occurs during a transfer sequence. When a time delay begins, the LCD display will indicate the time delay function name (e.g. GEN. START DELAY) and the current time remaining in the countdown sequence. When the timing function is complete, the LCD display will automatically change to either the next timing sequence countdown display or return to the original system status screen menu.

LCD DISPLAY

GEN START
DELAY① 45 SEC②

① Displays specific time delay function currently in operation

② Displays current time in seconds or minutes that are left in the specific timing sequence.

NOTE:

During a timer countdown sequence, a different display menu may be selected by pressing the *ENTER* push-button.

The following timer countdown screens are provided:

GEN START DELAY	**XX SEC.**
GEN WARMUP DELAY	**XX SEC.**
GEN COOLING DELAY	**XX SEC.**
UTILITY RETURN DELAY	**XX MIN.**
PRE-TRANSFER DELAY	**XX SEC.**
NEUTRAL DELAY	**XX SEC.**
POST-TRANSFER DELAY	**XX SEC.**

5.6. UTILITY SUPPLY MENU

The utility supply menu allows the operator to view the utility supply voltage and frequency values.

Katolight Service - Master Repair Manual - Page 4177

LCD DISPLAY

UTIL	60.0 HZ①	
600②	600③	600④

① Displays utility supply frequency in hertz (HZ). The frequency is displayed with a resolution of 1/10 of a hertz.

② Displays utility supply voltage as follows:

- 3-phase system: LINE TO LINE VOLTAGE--Phases A to B
- 1-phase system: LINE TO LINE VOLTAGE--Phases L1 to L2

③ Displays utility supply voltage as follows:

- 3-phase system: LINE TO LINE VOLTAGE--Phases B to C
- 1-phase system: LINE TO NEUTRAL VOLTAGE--Phases L1-N

④ Displays utility supply voltage as follows:

- 3-phase system: LINE TO LINE VOLTAGE--Phases C-A
- 1-phase system: LINE TO NEUTRAL VOLTAGE--Phases L2-N

5.7. *GENERATOR SUPPLY MENU*

The generator supply menu allows the operator to view the generator supply voltage and frequency values.

LCD DISPLAY

GEN	60.0 HZ①	
600②	600③	600④

① Displays generator supply frequency in hertz (HZ). The frequency is displayed with a resolution of 1/10 of a hertz.

② Displays generator supply voltage as follows:

- 3-phase system: LINE TO LINE VOLTAGE--Phases A to B
- 1-phase system: LINE TO LINE VOLTAGE--Phases L1 to L2

③ Displays generator supply voltage as follows:

- 3-phase system: LINE TO LINE VOLTAGE--Phases B to C
- 1-phase system: LINE TO NEUTRAL VOLTAGE--Phases L1-N

Katolight Service - Master Repair Manual - Page 4178

⊕ Displays generator supply voltage as follows:

- 3-phase system: LINE TO LINE VOLTAGE--Phases C-A
- 1-phase system: LINE TO NEUTRAL VOLTAGE--Phases L2-N

6. OPERATING INSTRUCTIONS

To operate the TSC 800 controller and associated transfer switch using the front faceplate push-buttons, refer to the following detailed operating instruction sub-section descriptions.

6.1. DISPLAY MENUS

The TSC 800 will display the last selected menu when normal utility or generator power is energized. To view another display menu, press the *ENTER* push-button to scroll to the next available menu. Keep pressing the ENTER push-button to view the complete list of display menu types. Note that the menu list will automatically loop back to the first menu item when the end of the list is reached.

6.2. TESTING INSTRUCTIONS

To perform a testing operation on the transfer switch using the front faceplate push-buttons, follow the procedure listed below.

To Initiate the Test Mode:

- Using the *ENTER* push-button, scroll to the **MANUAL TEST MENU**.
- Using the *INCREMENT* push-button, select the **YES** message and press the *ENTER* push-button.
- Using the *INCREMENT* push-button, select the **ON LOAD** or **OFF LOAD** test option as required.
- Press the *ENTER* push-button.

To Exit the Test Mode:

- Using the *ENTER* push-button, scroll to the **MANUAL TEST MENU.**
- Using the *INCREMENT* push-button, select the **YES** message and press the *ENTER* push-button.
- Using the *INCREMENT* push-button, select the **NONE** test option.
- Press the *ENTER* push-button.

Katolight Service - Master Repair Manual - Page 4179

6.3. TIME CLOCK ADJUSTMENT

To adjust the TSC 800 controllers internal time clock, follow the detailed procedure below. Note normal utility or generator power must be energized to enable adjustment.

- Using the *ENTER* push-button, scroll to the **PROGRAM MENU**.
- Using the *INCREMENT* push-button, select the **YES** message and press the *ENTER* push-button.
- Press the *ENTER* push-button when the **PASSWORD** message is displayed.
- Using the *INCREMENT* push-button, select the current ***day*** of the week message and press the *ENTER push*-button.
- Using the *INCREMENT* push-button, select the current ***hour*** of the day (i.e. 24 hour clock) and press the *ENTER push*-button.
- Using the *INCREMENT* push-button, select the current ***minute*** of the day (i.e. 60 minute) and press the *ENTER push*-button.
- Press the EXIT push-button and hold for 2 seconds to exit the time clock adjustment mode.

7. PROGRAMMING INSTRUCTIONS

Access to the programmable parameters of the **TSC 800** Transfer Controller is via a security password number. Three levels of security passwords are provided as described below:

READ ONLY MODE

User can view the programmable parameters only and cannot change any values. The Factory default number for the read-only level is one (1).

READ / WRITE MODE

User can view and modify any programming parameter as required. The Factory default number for the read/write level is two (2).

MASTER READ / WRITE MODE

User can view/modify any programming parameter as well as view/modify the security password level numbers. Consult TTI factory for master password number if required.

Katolight Service - Master Repair Manual - Page 4180

To enter the programming mode, follow the procedure as shown:

PROGRAM MENU
YES

Select the Program Menu by scrolling through the display menus using the ENTER push-button. When displayed, use the INCREMENT push-button to select the YES prompt and push the ENTER button .

PASSWORD
0

Use the INCREMENT or DECREMENT push-buttons to ramp the displayed number up or down to the desired password access number. Press the ENTER push-button when the correct number is displayed.

NOTE:

If an invalid number is entered, programming access will be limited to time clock adjustment only. To exit the programming mode, press the EXIT push-button and hold for two seconds until the display changes.

When the programming mode is accessed, the programming parameters will be displayed in the same order as the Programming Sheet. To skip over parameters that do not require changes, push and hold the ENTER push-button until the desired function is displayed. The EXIT push-button may be used to scroll backwards through the programming parameter loop.

To change a programmed parameter, use the INCREMENT or DECREMENT push-buttons to scroll through the available options or to adjust a value up or down to the desired number. When the desired option or number is displayed, press the ENTER push-button to accept the new value.

NOTE:

If the programming mode is terminated before the last change had been entered, the programming parameter will remain unchanged.

To exit the programming mode, press the EXIT push-button and hold for two seconds until the display changes.

Katolight Service - Master Repair Manual - Page 4181

7.1. EXERCISE TIMER

The TSC 800 controller has a built-in exercise timer which is programmable for a single occurrence, weekly exercise time period. The timer is fully programmable for time of day, duration of the test and type of test mode (i.e. On-Load or Off-Load). The exercise timer utilizes the TSC 800's internal time clock for referencing all timing functions. The time clock has a 10 minute power reserve feature to retain correct time settings during short duration utility power failures. Note: During any On-Load exercise test mode, the transfer switch will automatically re-transfer back to the utility supply if the generator set fails. To program the exercise timer prompts refer to the following descriptions:

7.1.1. AUTO TEST START DAY

Select the day of the week (e.g. Monday, Tuesday, etc.) that the generator set is to be started to begin its exercise period.

7.1.2. AUTO TEST START HOUR

Select the hour of the day (i.e. 0-23 hour) that the generator set is to be started to begin its exercise period.

7.1.3. AUTO TEST START MINUTE

Select the minute of the day (i.e. 0-59 minutes) that the generator set is to be started to begin its exercise period.

7.1.4. AUTO TEST STOP DAY

Select the day of the week (e.g. Monday, Tuesday, etc.) that the generator set is to be stopped following its exercise period.

7.1.5. AUTO TEST STOP HOUR

Select the hour of the day (i.e. 0-23 hour) that the generator set is to be stopped following its exercise period.

Katolight Service - Master Repair Manual - Page 4182

7.1.6. AUTO TEST STOP MINUTE

Select the minute of the day (i.e. 0 to 59 minutes) that the generator set is to be stopped following its exercise period.

7.1.7. AUTO TEST MODE

Select type of test mode desired. Three test modes are available as follows:

7.1.7.1. NONE: The exercise test mode is de-activated.

7.1.7.2. OFF LOAD: The generator set will be started during the exercise period but no transfer will occur. Note: the generator will transfer on load if the utility supply fails during the test period.

7.1.7.3. ON LOAD: The generator will be started and will transfer on load. Note: During the On-Load exercise test mode, the transfer switch will automatically re-transfer back to the utility supply if the generator set fails.

7.2. SYSTEM CONFIGURATION

The TSC 800 controller provides a flexible control system to allow specific operation for a wide range of power distribution types. To program the system configuration, refer to the following descriptions:

7.2.1. NODE ADDRESS

Set to unique controller address (1-255) for use with network connected TSC 800 controllers.

Note: This programming feature is only active when the remote communication option is enabled. Default setting for single TSC 800 applications is 1.

7.2.2. SYSTEM VOLTAGE

Set to nominal system voltage as expressed in "phase to phase" voltage.(i.e. a 347/600 volt system would be entered as "600". The programmable range of values is 120V-15,000V.

7.2.3. VOLTAGE SENSING RATIO

For direct voltage sensing wiring connections from 208 to 600 volts, enter a ratio of "1:1". When potential transformers are utilized for voltage sensing, enter the transformer ratio.(e.g. when using a 600:120 transformer, enter a ratio of "5:1".

7.2.4. SYSTEM FREQUENCY

Set to nominal system frequency of either 50 HZ or 60 HZ.

Katolight Service - Master Repair Manual - Page 4183

7.2.5. SYSTEM PHASES

Set to match the power distribution system used on the automatic transfer switch (i.e. either 1 phase or 3 phase system).

7.3. *VOLTAGE SENSING*

The TSC 800 controller provides 3-phase overvoltage and undervoltage sensing on both utility and generator supplies. Each sensor is individually programmable for pickup and dropout voltage setpoints (i.e. adjustable hysteresis) in addition to transient time delay settings. To program the voltage sensing features, refer to the following descriptions:

7.3.1. UTILITY UNDERVOLTAGE SENSOR PICKUP

Set to the desired utility undervoltage setpoint at which the internal voltage sensor *picks up* (i.e. the sensor energizes to a normal state when the utility voltage is above the setpoint). The setting is entered based on a phase to phase voltage value within a range of 70% to 100% of nominal system voltage. Note: The difference between the pickup and dropout setting is considered the dead band or hysteresis value.

7.3.2. UTILITY UNDERVOLTAGE SENSOR DROPOUT

Set to the desired utility undervoltage setpoint at which the internal voltage sensor *drops out* (i.e. the sensor de-energizes to an abnormal state when the utility voltage is below the setpoint). The setting is entered based on a phase to phase voltage value within a range of 70% to 100% of nominal system voltage. Note: The difference between the pickup and dropout setting is considered the dead band or hysteresis value.

7.3.3. UTILITY UNDERVOLTAGE SENSOR TIME DELAY (DROPOUT)

Select the desired utility undervoltage time delay setting. The setting is entered in seconds within a range of 0 to 10 seconds. If no delay is required, set this time delay to zero.

7.3.4. UTILITY OVERVOLTAGE SENSOR PICKUP

Note: This feature is optional and must be factory ordered with the transfer switch. Set to the desired utility overvoltage setpoint at which the internal voltage sensor *picks up* (i.e. the sensor energizes to an abnormal state when the utility voltage is above the setpoint). The setting is entered based on a phase to phase voltage value within a range of 100% to 130% of nominal system voltage. **Note:** The

Katolight Service - Master Repair Manual - Page 4184

difference between the pickup and dropout setting is considered the dead band or hysteresis value.

7.3.5. UTILITY OVERVOLTAGE SENSOR DROPOUT

Note: This feature is optional and must be factory ordered with the transfer switch. Set to the desired utility overvoltage setpoint at which the internal voltage sensor *drops out* (i.e. the sensor de-energizes to a normal state when the utility voltage is below the setpoint). The setting is entered based on a phase to phase voltage value within a range of 100% to 130% of nominal system voltage. **Note:** The difference between the pickup and dropout setting is considered the dead band or hysteresis value.

7.3.6. UTILITY OVERVOLTAGE SENSOR TIME DELAY (PICKUP)

Note: This feature is optional and must be factory ordered with the transfer switch. Select the desired utility overvoltage time delay setting. The setting is entered in seconds within a range of 0 to 5 seconds. If no delay is required, set this time delay to zero.

7.3.7. GENERATOR UNDERVOLTAGE SENSOR PICKUP

Set to the desired generator undervoltage setpoint at which the internal voltage sensor *picks up* (i.e. the sensor energizes to a normal state when the generator voltage is above the setpoint). The setting is entered based on a phase to phase voltage value within a range of 70% to 100% of nominal system voltage. **Note**: The difference between the pickup and dropout setting is considered the dead band or hysteresis value.

7.3.8. GENERATOR UNDERVOLTAGE SENSOR DROPOUT

Set to the desired generator undervoltage setpoint at which the internal voltage sensor *drops out* (i.e. the sensor de-energizes to an abnormal state when the generator voltage is below the setpoint). The setting is entered based on a phase to phase voltage value within a range of 70% to 100% of nominal system voltage. **Note**: The difference between the pickup and dropout setting is considered the dead band or hysteresis value.

7.3.9. GENERATOR UNDERVOLTAGE SENSOR TIME DELAY (DROPOUT)

Select the desired generator undervoltage time delay setting. The setting is entered in seconds within a range of 0 to 10 seconds. If no delay is required, set this time delay to zero.

Katolight Service - Master Repair Manual - Page 4185

7.3.10. GENERATOR OVERVOLTAGE SENSOR PICKUP

Note: This feature is optional and must be factory ordered with the transfer switch. Set to the desired generator overvoltage setpoint at which the internal voltage sensor *picks up* (i.e. the sensor energizes to an abnormal state when the generator voltage is above the setpoint). The setting is entered based on a phase to phase voltage value within a range of 100% to 130% of nominal system voltage. Note: The difference between the pick up and drop out setting is considered the dead band or hysteresis value.

7.3.11. GENERATOR OVERVOLTAGE SENSOR DROPOUT

Note: This feature is optional and must be factory ordered with the transfer switch. Set to the desired generator overvoltage setpoint at which the internal voltage sensor *drops out* (i.e. the sensor de-energizes to a normal state when the generator voltage is below the setpoint). The setting is entered based on a phase to phase voltage value within a range of 100% to 130% of nominal system voltage. **Note**: The difference between the pickup and dropout setting is considered the dead band or hysteresis value.

7.3.12. GENERATOR OVERVOLTAGE SENSOR TIME DELAY (PICKUP)

Note: This feature is optional and must be factory ordered with the transfer switch. Select the desired generator overvoltage time delay setting. The setting is entered in seconds within a range of 0 to 5 seconds. If no delay is required, set this time delay to zero.

7.4. FREQUENCY SENSING

The **TSC 800** controller provides under and over frequency sensing on both utility and generator supplies. Each sensor is individually programmable for pickup and dropout frequency setpoints (i.e. adjustable hysteresis) in addition to transient time delay settings. To program the frequency sensing features, refer to the following descriptions:

7.4.1. UTILITY UNDERFREQUENCY SENSOR

Note: This feature is optional and must be factory ordered with the transfer switch.

Set to the desired utility underfrequency setpoint at which the internal frequency sensor *drops out* (i.e. the sensor de-energizes to an abnormal state when the utility frequency is below the setpoint). The setting is entered in a frequency value within a range of 40.0 to 60.0 HZ.

Katolight Service - Master Repair Manual - Page 4186

7.4.2. UTILITY UNDERFREQUENCY SENSOR TIME DELAY (DROPOUT)

Note: This feature is optional and must be factory ordered with the transfer switch.

Select the desired utility underfrequency time delay setting. The setting is entered in seconds within a range of 0 to 10 seconds. If no delay is required, set this feature to zero.

7.4.3. UTILITY OVERFREQUENCY SENSOR

Note: This feature is optional and must be factory ordered with the transfer switch.

Set to the desired utility overfrequency setpoint at which the internal frequency sensor *picks up* (i.e. the sensor energizes to an abnormal state when the utility frequency is above the setpoint). The setting is entered in a frequency value within a range of 50.0 to 70.0 HZ.

7.4.4. UTILITY OVERFREQUENCY SENSOR TIME DELAY (PICKUP)

Note: This feature is optional and must be factory ordered with the transfer switch.

Select the desired utility overfrequency time delay setting. The setting is entered in seconds within a range of 0 to 5 seconds. If no delay is required, set this time delay to zero.

7.4.5. GENERATOR UNDERFREQUENCY SENSOR

Set to the desired generator underfrequency setpoint at which the internal frequency sensor *drops out* (i.e. the sensor de-energizes to an abnormal state when the generator frequency is below the setpoint). The setting is entered in a frequency value within a range of 40.0 to 60.0 HZ.

7.4.6. GENERATOR UNDERFREQUENCY SENSOR TIME DELAY (DROPOUT)

Select the desired generator underfrequency time delay setting. The setting is entered in seconds within a range of 0 to 10 seconds. If no delay is required, set this time delay to zero.

7.4.7. GENERATOR OVERFREQUENCY SENSOR

Set to the desired generator overfrequency setpoint at which the internal frequency sensor *picks up* (i.e. the sensor energizes to an abnormal state when the generator frequency is above the setpoint). The setting is entered in a frequency value within a range of 50.0 to 70.0 HZ.

Katolight Service - Master Repair Manual - Page 4187

7.4.8. GENERATOR OVERFREQUENCY SENSOR TIME DELAY (PICKUP)

Select the desired generator overfrequency time delay setting. The setting is entered in seconds within a range of 0 to 5 seconds. If no delay is required, set this time delay to zero.

7.5. TIME DELAYS

The TSC 800 provides many time delay control functions which are individually programmable as described below.

7.5.1. GENERATOR START DELAY

The generator (i.e. engine) start signal will be initiated following expiry of the start delay timer. Select desired generator start delay time in seconds. The range of setting is 0 to 60 seconds. If no delay is required, set this time delay to zero. **Note**: The output relay is normally energized when the utility power is within limits and de-energizes to start the generator.

7.5.2. GENERATOR WARM UP DELAY

A transfer to the generator supply will be initiated when the voltage and frequency are within limits and upon expiry of the warm up delay timer. Select desired generator warm up delay time in seconds. The range of settings is 0 to 1800 seconds. If no delay is required, set this time delay to zero.

7.5.3. GENERATOR COOLDOWN DELAY

The generator (i.e. engine) cooldown period will be initiated once the load has transferred from the generator supply. The engine start signal will be maintained until expiry of the cooldown delay timer. Select desired generator cooldown delay time in minutes. The range of settings is 0 to 30 minutes. If no delay is required, set this time delay to zero.

7.5.4. UTILITY RETURN DELAY

The utility return delay period will be initiated once the utility supply has returned within limits following a utility power failure condition. Select desired utility return delay time in minutes. The range of settings is 0 to 30 minutes. If no delay is required, set this time delay to zero. **Note**: The utility return delay will be bypassed should the generator fail during the time delay period.

Katolight Service - Master Repair Manual - Page 4188

7.5.5. PRE/POST TRANSFER DELAY (LDC)

Note: This feature is optional and must be factory ordered with the transfer switch.

The pre/post transfer delay period will be initiated upon a impending transfer in either direction. The pre/post transfer output relays will momentarily energize (as per the pre-transfer time setting) prior to a load transfer and will stay energized until the post-transfer delay time period expires. Select desired pre- and post-delay time in seconds. The range of settings is 0 to 30 seconds. If no delay is required, set this time delay to zero.

7.5.6. MINIMUM FIND NEUTRAL DELAY

The TSC 800 transfer control logic includes an adjustable time delay feature to compensate for the minimum time that a transfer switch mechanism takes to operate when load sensing voltage is lost due to a power failure. This time delay is set to a time value which is approximately *equal* to the time that the transfer mechanism typically takes to operate from one supply position to the neutral position. This feature is factory set to match the specific transfer switch mechanism as supplied with the unit.

7.5.7. MAXIMUM FIND NEUTRAL DELAY

The TSC 800 transfer control logic includes an adjustable time delay feature to compensate for the maximum time that a transfer switch mechanism takes to operate when load sensing voltage is used to detect the neutral position. This time delay is set to a time value which is *greater than* the typical time that the transfer mechanism typically takes to operate from one supply position to the neutral position. When the TSC 800 controller is supplied from the factory with a TTI transfer mechanism the Maximum Find Neutral Delay will be factory set for correct operation. Note: When the TSC 800 controller is supplied loose without a transfer mechanism, the Maximum Find Neutral Delay function must be user set for correct operation with the appicable transfer mechanism. For applications using electrically held contactors, the Maximum Find Neutral Delay function must typically be set for 0.0 seconds for correct operation.

7.5.8. NEUTRAL DELAY TIMER (NDT)

The neutral delay time period will be initiated once both of the supply breakers are open during a transfer sequence. Select desired neutral delay time in seconds. The range of settings is 0 to 60 seconds. If no delay is required, set

Katolight Service - Master Repair Manual - Page 4189

this time delay to zero. **Note**: The neutral delay will be bypassed should the operating power fail for longer than the timer setting.

NOTE: Model TS 890 transfer switches may use NDT timers which are external to the TSC 800 controller. In this case the TSC 800 NDT function is not used and must be set at zero seconds. Refer to TS 890 drawings for further information.

7.5.9. MAXIMUM TRANSFER TIME

The TSC 800 transfer control logic includes an adjustable time delay feature to detect when a transfer switch mechanism fails to operate. This time delay is set to a time value which is *greater than* the typical time that the transfer mechanism typically takes to operate from one supply position to the opposite supply position. This feature is factory set to match the specific transfer switch mechanism as supplied with the unit.

7.5.10. TRANSFER FAIL

The TSC 800 transfer switch controller contains a "TRANSFER SWITCH FAIL" detection feature. This feature is user programmable and allows 3 different functional settings which are described below:

DISABLED: The "TRANSFER SWITCH FAIL" feature is disabled in this mode. The TSC 800 controller will not verify that the transfer mechanism has operated correctly.

HALT TRANSFER: The TSC 800 controller will verify that the transfer switch mechanism has correctly transferred or is in the correct position. If the TSC 800 controller senses an abnormal condition (i.e. load voltage and transfer switch position contacts are not at the normal levels or states) the controller will activate an alarm message to the LCD display. The transferring output signals from the controller will be de-activated and the engine start contact will remain in its last state (before the alarm was activated). The controller has an internal 30 second timer to provide an alarm bypass to enable correct operating sequences. To reset the alarm condition, the "lamp test" function must be activated.

FORCE TRANSFER: The TSC 800 controller will verify that the transfer switch mechanism has correctly transferred or is in the correct position. If the TSC 800 controller senses an abnormal condition (i.e. fail to transfer when initiated, load voltage failure due to a tripped transfer breaker or transfer switch limit switch failure) the controller will activate an alarm message to the LCD display. The transferring output signals from the controller will be enabled and will force

Katolight Service - Master Repair Manual - Page 4190

a transfer to the alternate source if available and within nominal limits. The transfer switch will remain on the alternate source indefinitely until the "Transfer Fail" alarm condition is manually reset on the TSC 800 controller. The controller has an internal 30 second timer to provide an alarm bypass to enable correct operating sequences. To reset the alarm condition, the "lamp test" function must be activated

Note**: The TTI factory default setting for the TSC 800 "Transfer Switch Fail" function is **FORCE TRANSFER

7.5.11. TRANSFER LOGIC

Note: This feature is user selectable in TSC 800 software version 1.3 (or greater).

The TSC 800 transfer controller software contains a user selectable function for type of transfer logic required for specific applications. This feature will be factory set for specific type of application and transfer mechanism used and therefore should not require resetting.

Selectable operating logic is as follows:

MAINTAINED: The TSC 800 transfer output signals will stay in the 'MAINTAINED" energized state upon a source failure and will only de-energize when the alternate source becomes available. Note: the transfer output signal will de-energize upon a total loss of source voltage.

DROPOUT: The TSC 800 transfer output signals will "DROPOUT" (or de-energize) when the connected source goes out of normal voltage or frequency limits. The transfer output signal will only re-energize when the connected source returns to normal limits.

7.5.12. PROGRAMMABLE OUTPUT

The TSC 800 transfer controller includes a standard programmable output relay signal. The output relay energizes when one of the following conditions occurs. Note: Only one function may be programmed.

LOAD ON UTILITY	Output energizes when the utility transfer breaker is closed and load voltage is present.
LOAD ON GENERATOR	Output energizes when the generator transfer breaker is closed and load voltage is present.
LOAD SHED	Output energizes when generator is on load and frequency drops below underfrequency setpoint for longer than the time delay setting.

Katolight Service - Master Repair Manual - Page 4191

UTILITY SUPPLY NORMAL — Output relay energizes when the utility supply is energized and is within voltage and frequency limits.

FAIL TO TRANSFER — Output relay energizes when the transfer switch mechanism fails to operate for the given time delay period. Note: This output feature is only activated when the "TRANSFER SWITCH FAIL" feature is set to either "Halt" or "Force" transfer settings. (Refer to programming item 6.5.10 for additional information.)

7.5.13. UTILITY FAIL CALLOUT

When the remote communication option is enabled, this programming prompt will appear. This feature may be enabled or disabled by programming selection.

ENABLED: The controller will initiate a callout signal via the communication port to a remote connected device when a Utility (Source 1) power failure is detected. The callout signal will be reset when the Utility (Source 1) power returns to normal condition.

DISABLED: The controller will not initiate a callout when a Utility (Source 1) power failure is detected.

7.5.14. LOAD ON GENERATOR CALLOUT

When the remote communication option is enabled, this programming prompt will appear. This feature may be enabled or disabled by programming selection.

ENABLED: The controller will initiate a callout signal via the communication port to a remote connected device when the load is connected to the generator supply. The callout signal will be reset when the load transfers back to the utility supply.

DISABLED: The controller will not initiate a callout when the load transfers to the generator supply.

7.5.15. TRANSFER FAIL CALLOUT

When the remote communication option is enabled, this programming prompt will appear. This feature may be enabled or disabled by programming selection.

Katolight Service - Master Repair Manual - Page 4192

ENABLED: The controller will initiate a callout signal via the communication port to a remote connected device when the transfer switch fails to operate. The callout signal will only reset when the "Fail to Transfer" alarm is manually reset via local push-buttons or with the remote communication software.

DISABLED: The controller will not initiate a callout when a "Fail to Transfer " alarm condition occurs.

7.5.16. AUTO TEST CALLOUT

When the remote communication option is enabled, this programming prompt will appear. This feature may be enabled or disabled by programming selection.

ENABLED: The controller will initiate a callout signal via the communication port to a remote connected device when a automated test is initiated at the controller via the TSC 800 exercise time clock. The callout signal will reset when the Auto Test condition is terminated.

DISABLED: The controller will not initiate a callout an Auto Test condition is initiated.

7.5.17. MAN TEST CALLOUT

When the remote communication option is enabled, this programming prompt will appear. This feature may be enabled or disabled by programming selection.

ENABLED: The controller will initiate a callout signal via the communication port to a remote connected device when a manual test is initiated at the controller via the TSC 800 push-buttons or external control switch. The callout signal will reset when the Manual Test condition is terminated.

DISABLED: The controller will not initiate a callout a Manual Test condition is initiated.

7.5.18. SWITCH NOT IN AUTO CALLOUT

When the remote communication option is enabled, this programming prompt will appear. This feature may be enabled or disabled by programming selection.

ENABLED: The controller will initiate a callout signal via the communication port to a remote connected device when the TSC 800 controllers' operating mode is "Not In Auto" as locally selected via the four position external control switch. The callout signal will reset when the control switch is returned to the Auto position.

Katolight Service - Master Repair Manual - Page 4193

DISABLED: The controller will not initiate a callout if the TSC 800 controller is not in the Auto mode of operation.

7.5.19. BACK LIGHT TIME OUT

The LCD back light function can be programmed so it will automatically turn off after the selected time.

7.6. *VOLTAGE SENSING CALIBRATION*

Voltage sensing calibration for the utility, generator and load sensors is provided by the TSC 800 software program. All voltage sensing circuits are factory calibrated to specific voltage levels prior to shipment of the transfer switch.

Should field calibration of any voltage sensing circuit be required, the following procedure may be used.

WARNING

Voltage sensing circuits are capable of lethal voltages while energized. Standard safety procedures should be followed and be performed by qualified personnel only. Failure to do so may cause personnel injury and/or death.

7.6.1. GENERAL

7.6.1.1. To access the TSC 800's software programming loop for programming, the program menu must be selected, the YES prompt entered and read/write security password level (or higher) must be entered.

7.6.1.2. Once the programming loop has been accessed, scroll to the voltage calibration screens as shown below.

UTIL AB① ZERO②
99③ 600V④

① Displays the selected supply's phase voltages to be calibrated.

② Displays the type of calibration function, either ZERO or SPAN.

Katolight Service - Master Repair Manual - Page 4194

- Displays the calibration correction factor number (0-255) used to obtain the correct voltage reading. **Note**: To correctly calibrate any of the voltage sensors, the ZERO function must be calibrated before the SPAN function.
- Displays the actual voltage measurement which will be the same value as shown on the TSC 800 display menus for generator or utility supplies. This voltage reading may be calibrated higher or lower by changing the correction factor number.

NOTE:
To accurately calibrate the TSC 800's voltage sensors, an external test voltage meter is required, with an accuracy of 0.5% or better.

7.6.2. UTILITY VOLTAGE CALIBRATION

To adjust the utility supply voltage sensors, perform the following procedure:

7.6.2.1.ZERO CALIBRATION

7.6.2.1.1. Energize the generator supply to power up the controller and de-energize the utility supply.

7.6.2.1.2. Scroll to the desired utility supply voltage phases with the **ZERO** function selected.

7.6.2.1.3. Use the INCREMENT or DECREMENT push-buttons to adjust the correction factor number while observing the displayed voltage level. Adjust the correction factor number to obtain 0 VAC on the display.

7.6.2.1.4. With the correct voltage displayed, press the ENTER push-button to accept the correction factor number. Record the correction factor number on the TSC 800 programming sheet for future reference if required.

7.6.2.1.5. Repeat the above procedure for all remaining phases of the utility supply as required.

Katolight Service - Master Repair Manual - Page 4195

7.6.2.2. SPAN CALIBRATION

7.6.2.2.1. Energize the utility supply voltage to the controller at nominal level. The generator supply may be de-energized.

7.6.2.2.2. In the programming mode, scroll to the desired utility supply voltage phases with the **SPAN** function selected.

7.6.2.2.3. Connect an external AC voltmeter of adequate voltage range and accuracy to the TSC 800 controller terminal associated with the voltage phases to be calibrated.

WARNING

Voltage sensing circuits are capable of lethal voltages while energized. Standard safety procedures should be followed and be performed by qualified personnel only. Failure to do so may cause personal injury and/or death.

7.6.2.2.4. Use the INCREMENT or DECREMENT push-buttons to adjust the correction factor number while observing the displayed voltage level on the TSC 800. Adjust the correction factor number to obtain an identical voltage reading as measured with the external AC voltmeter.

7.6.2.2.5. With the correct voltage displayed, press the *ENTER* push-button to accept the correction factor number. Record the correction factor number on the TSC 800 programming sheet for future reference if required.

7.6.2.2.6. Repeat the above procedures for all remaining phases of the utility supply as required.

NOTE:

Once the span calibration setting has been done, do not readjust any zero calibration points as this will cause incorrect voltage readings.

Katolight Service - Master Repair Manual - Page 4196

8. TSC 800 PROGRAMMING DATA SHEETS

SUMMARY CONFIGURATION DATA SHEET

WORK ORDER #:		REV.		REV. DATE:	
INITIATED BY:		CUSTOMER:		DEFAULT PROGRAM #:	
DATE:		PROJECT:		TPS VERSION:	

NOTES:

SYSTEM AC INPUTS

SYSTEM AC VOLTS:_____ PHASES:_____ FREQUENCY:_____ CONTROL TYPE:_____

DIGITAL DISPLAY FEATURES

☐ GEN AC VOLTAGE ☐ UTILIY AC VOLTAGE ☐ TIME CLOCK

☐ GEN AC FREQUENCY ☐ UTILITY AC FREQUENCY

STANDARD FEATURES

☐ Level 1 Features

- 3 phase Utility (SRC 1) Undervoltage Sensing
- 3 phase Gen (SRC 2) Undervoltage Sensing
- Generator Underfrequency Sensing
- Generator Start Delay Timer
- Generator Cooldown Timer
- Utility Return Timer
- Generator Warm-up Timer
- Automatic Exercise Timer
- Neutral Delay Timer

☐ Level 2 Features (Level 1 features plus)

- Utility/Gen 3 Phase Overvoltage Sensing
- Utility Overfrequency Sensing

☐ Level 3 Features (Level 1& 2 features plus)

- Dual Source Logic

OPTIONAL FEATURES

☐ Utility/Gen 3 Phase Overvoltage Sensing
☐ Utility Overfrequency Sensing
☐ Load Disconnect Contact
☐ COM Port Enabled

STANDARD PROGRAMMABLE OUTPUTS

OUTPUT NAME	OUTPUT FUNCTION
☐ Programmable Output	☐ Load on Gen
_____	☐ Load on Utility
_____	☐ Utility Normal
_____	☐ Transfer Fail
	☐ Load Shed

Katolight Service - Master Repair Manual - Page 4197

9. MAIN MENU PROGRAMMING SHEET

PARAMETER		VALUE	RANGE LOW	RANGE HIGH
CONTROL TYPE	*STD ATS / DUAL SOURCE*			
AUTO TEST START DAY				
AUTO TEST START HOUR				
AUTO TEST START MIN				
AUTO TEST STOP DAY				
AUTO TEST STOPHOUR				
AUTO TEST STOP MIN				
AUTO TEST MODE				
COMMUNICATION OPTION	*toggle enabled/disabled*			
NODE ADRESS	#		1	255
SYSTEM VOLTAGE	*[***VAC]*			
VOLTAGE SENSING RATIO	*RATIO*		1	208
SYSTEM FREQUENCY	*[***Hz]*		0	125
SYSTEM PHASES	*TOGGLE 1 OR 3 PHASE*			
UTILITY UNDERVOLTAGE SENSORS PICK UP	*[***VAC]*		0 to	0
UTILITY UNDERVOLTAGE SENSORS DROP OUT	*[***VAC]*		0 to	0
UTILITY UNDERVOLTAGE SENSORS TIME DELAY DROP OUT	*[**SEC]*		0 to	10
UTILITY OVERVOLTAGE SENSORS PICK UP	*[***VAC]*		0 to	0
UTILITY OVERVOLTAGE SENSORS DROP OUT	*[***VAC]*		0 to	0
UTILITY OVERVOLTAGE SENSORS TIME DELAY PICK UP	*[**SEC]*		0 to	5
UTILITY UNDER FREQUENCY SENSORS	*[***Hz]*		48.0 to	60.0
UTILITY UNDER FREQUENCY SENSORS TIME DELAY DROPOUT	*[**SEC]*		0 to	10
UTILITY OVER FREQUENCY SENSORS	*[***Hz]*		50.0 to	70.0
UTILITY OVER FREQUENCY SENSORS TIME DELAY PICK UP	*[**SEC]*		0 to	5
GENERATOR UNDERVOLTAGE SENSORS PICK UP	*[***VAC]*		0 to	0
GENERATOR UNDERVOLTAGE SENSORS DROP OUT	*[***VAC]*		0 to	0
GENERATOR UNDERVOLTAGE SENSORS TIME DELAY DROP OUT	*[**SEC]*		0 to	10
GENERATOR OVERVOLTAGE SENSORS PICK UP	*[***VAC]*		0 to	0
GENERATOR OVERVOLTAGE SENSORS DROP OUT	*[***VAC]*		0 to	0
GENERATOR OVERVOLTAGE SENSORS TIME DELAY PICK UP	*[**SEC]*		0 to	5
GENERATOR UNDER FREQUENCY SENSORS	*[***Hz]*		40.0 to	60.0
GENERATOR UNDER FREQUENCY SENSORS TIME DELAY DROP OUT	*[**SEC]*		0 to	10
GENERATOR OVER FREQUENCY SENSORS	*[***Hz]*		50.0 to	70.0
GENERATOR OVER FREQUENCY SENSORS TIME DELAY PICK UP	*[**SEC]*		0 to	5
GENERATOR START DELAY	*[****SEC]*		0 to	60
GENERATOR WARM-UP DELAY	*[****SEC]*		0 to	1800
GENERATOR COOLDOWN DELAY	*[****MIN]*		0 to	30
UTILITY RETURN DELAY	*[****MIN]*		0 to	30
PRE-TRANSFER DELAY	*[****SEC]*		0 to	30
MIN FIND NEUTRAL DELAY	*[****SEC]*		0.0 to	20.0
MAX FIND NEUTRAL DELAY	*[****SEC]*		0.0 to	20.0
NEUTRAL DELAY	*[****SEC]*		0 to	60
MAX TRANSFER TIME	*[****SEC]*		0 to	30
POST TRANSFER DELAY	*[****SEC]*		0 to	30
TRANSFER FAIL	*toggle disabled/Halt/Force*			
TRANSFER OUTPUT LOGIC	*toggle maintained/dropout*			
PROGRAMMABLE OUTPUT	*A=LD ON UTIL,B= LD ON GEN,C= LD SHED,D= UTIL NORMAL,E=FAIL TO XFER*		A to	E
UTILITY FAIL CALLOUT	*toggle enabled/disabled*			
LOAD ON GEN CALLOUT	*toggle enabled/disabled*			
TRANSFER FAIL CALLOUT	*toggle enabled/disabled*			
AUTO TEST CALLOUT	*toggle enabled/disabled*			
MAN TEST CALLOUT	*toggle enabled/disabled*			
SWITCH NOT IN AUTO CALLOUT	*toggle enabled/disabled*			
BACKLIGHT	*[****SEC]*		0 to	999

Katolight Service - Master Repair Manual - Page 4198

10. CALIBRATION DATA SHEET

UTILITY PHASE A - B ZERO	*[*CORRECTION FACTOR*]*		0 to 255
UTILITY PHASE A - B SPAN	*[*CORRECTION FACTOR*]*		0 to 255
UTILITY PHASE B - C ZERO	*[*CORRECTION FACTOR*]*		0 to 255
UTILITY PHASE B - C SPAN	*[*CORRECTION FACTOR*]*		0 to 255
UTILITY PHASE C - A ZERO	*[*CORRECTION FACTOR*]*		0 to 255
UTILITY PHASE C - A SPAN	*[*CORRECTION FACTOR*]*		0 to 255
GENERATOR PHASE A - B ZERO	*[*CORRECTION FACTOR*]*		0 to 255
GENERATOR PHASE A - B SPAN	*[*CORRECTION FACTOR*]*		0 to 255
GENERATOR PHASE B - C ZERO	*[*CORRECTION FACTOR*]*		0 to 255
GENERATOR PHASE B - C SPAN	*[*CORRECTION FACTOR*]*		0 to 255
GENERATOR PHASE C - A ZERO	*[*CORRECTION FACTOR*]*		0 to 255
GENERATOR PHASE C - A SPAN	*[*CORRECTION FACTOR*]*		0 to 255
LOAD PHASE A - B ZERO	*[*CORRECTION FACTOR*]*		0 to 255
LOAD PHASE A - B SPAN	*[*CORRECTION FACTOR*]*		0 to 255

Katolight Service - Master Repair Manual - Page 4199

11. TSC 800 TYPICAL CONNECTION DIAGRAM

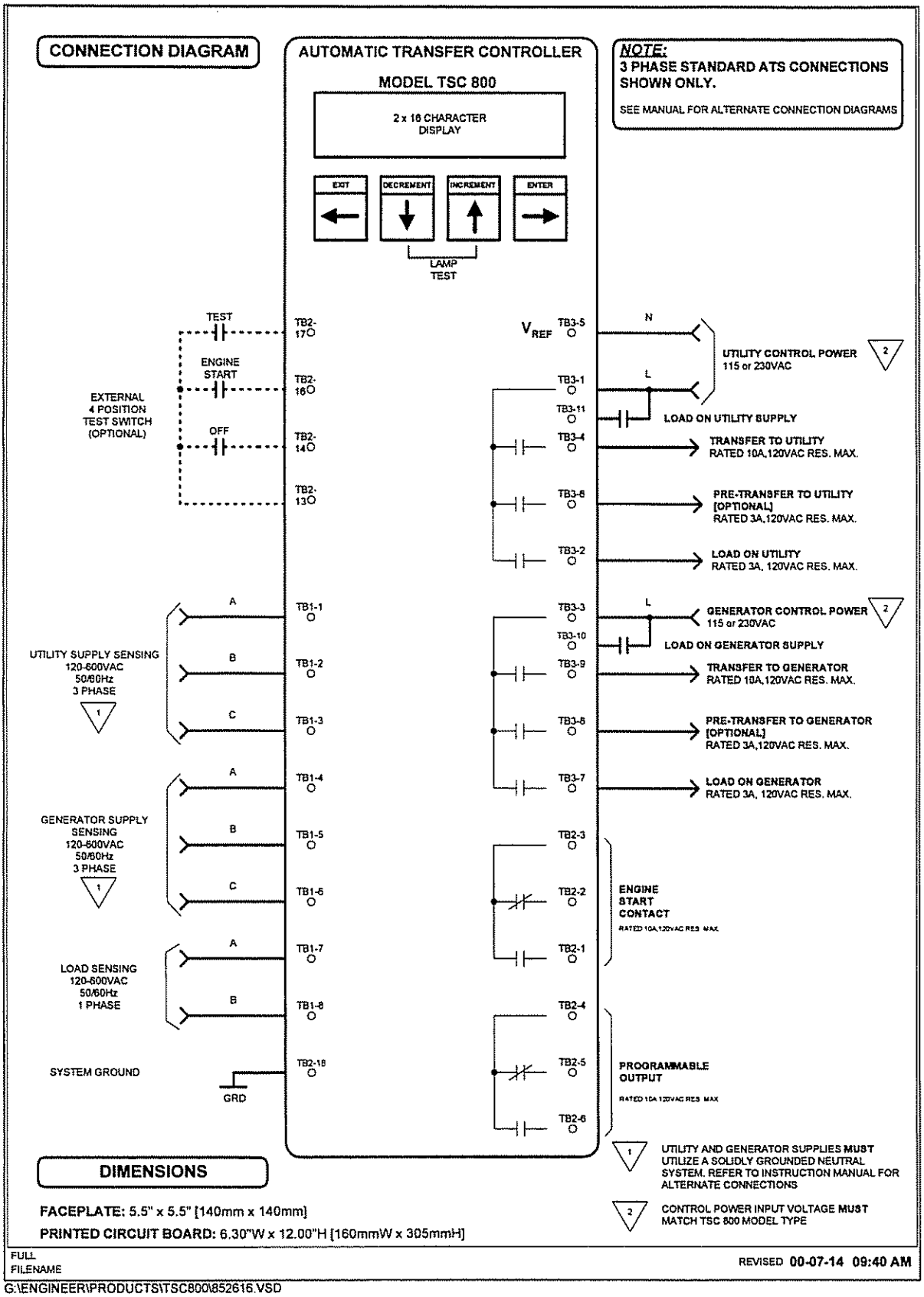

Katolight Service - Master Repair Manual - Page 4200

12. TSC 800 SPECIFICATIONS

- POWER SUPPLY:
  - 115 or 230 VAC nominal (+10% -30%)
    - 50/60 Hz
    - 100ma nominal (no external load connected)

- VOLTAGE SENSING:
  - Direct 120-600 VAC nominal, single or three phase
  - 50/60 Hz
  - +/- 0.5% accuracy of setting @ 25°C

- OPERATING TEMPERATURE:
  - 0°C to +50°C

- OUTPUT CONTACTS (Form C, 10A,120/240VAC resistive)
  - Engine start
  - Programmable function (not available with dual source system logic)

- OUTPUT SIGNALS (120/240 VAC resistive load)
  - Transfer to utility 10A
  - Transfer to generator 10A
  - Pre/post-transfer to utility 3A
  - Pre/post-transfer to generator 3A
  - Load on utility 3A
  - Load on generator 3A

Katolight Service - Master Repair Manual - Page 4201

13. TROUBLESHOOTING

A number of problems can cause the TSC 800 controller not to function properly. Refer to the following list of typical problems. Consult the factory for any detailed information or for any problems not listed.

CAUTION!!!

Before opening the enclosure to perform any service task, it is imperative to isolate the transfer switch from any possible source of power. Failure to do so may result in serious personal injury or death due to electrical shock.

Service procedures must be undertaken by qualified personnel only!

Symptom	Possible Causes
- Will not re-transfer to utility source upon restoration	- a test mode has been activated (check TSC 800 status LCD display) - utility voltage or frequency is outside the pre-programmed limits (check utility source for adequate voltage & frequency) - a loose control connection - faulty contactor auxiliary contact - defective utility contactor coil - defective TSC 800 controller (verify output signals with circuit board mounted diagnostic LED's) - TSC 800 has "Transfer Fail" alarm activated (if programmed as "Force Transfer). Determine cause of alarm and rectify before TSC 800 is reset
- Will not transfer to generator source upon failure of utility source	- generator set not producing enough voltage/frequency or output circuit breaker open - warm-up time delay function has not timed out yet (verify TSC 800 timer setting) - a loose control connection - faulty contactor auxiliary contact - defective generator contactor coil - defective TSC 800 controller (verify output signals with circuit board mounted diagnostic LED's) - TSC 800 has "Transfer Fail" alarm activated (if programmed as "Force Transfer). Determine cause of alarm and rectify before TSC 800 is reset
- Transfer to generator source without a power failure in the utility source	- a test mode has been activated (check TSC 800 status LCD display) - defective TSC 800 controller (verify output signals with circuit board mounted diagnostic LED's) - loose or broken wire to the utility voltage sensing terminals on the TSC 800 controller - Utility supply voltage is slightly above or below voltage sensing setpoints. Compare TSC 800 program voltage setpoints with actual utility voltage displayed on the controller - Utility Breaker has tripped due to an overcurrent condition (Type B or Service Entrance type ATS) and TSC 800 "Transfer Fail" alarm activated (Note: TSC 800 must be programmed as "Force Transfer for this to occur). Determine cause of alarm and rectify before TSC 800 is

Katolight Service - Master Repair Manual - Page 4202

Symptom	Possible Causes
	reset
- Generator does not start up or stop when it should	- verify remote engine control panel is set for automatic mode
- No time delay when there should be	- verify time delay function in the TSC 800 program setting as per programming sheets as supplied with the transfer switch
- power is not available at the load terminals but the utility or generator breaker appears to be closed to a live source	- the breaker's trip unit (service entrance or "Type B" style only) has tripped on a fault on the system and TSC 800 "Transfer Fail" is programmed as "Disabled or Halt Transfer". Correct the fault, and manually reset the breaker in the transfer switch by moving it off and then on again with the manual operating handle
- Engine runs for no apparent reason	- Verify the TSC 800 has not been set for test operation. If yes, select manual test "NONE". Refer to section 4.2 for operation details

DEFECTIVE COMPONENTS

Return defective components to Thomson Technology Inc. for repair. **Be sure to advise model and serial number of the transfer switch.**

Katolight Service - Master Repair Manual - Page 4203

14. NOTES

Katolight Service - Master Repair Manual - Page 4204

THOMSON TECHNOLOGY®
A Subsidiary of Regal-Beloit Corporation
POWER & CONTROL

TS 840

AUTOMATIC TRANSFER SWITCHES

INSTALLATION, OPERATING & SERVICE MANUAL

PM057 REV 2 05/03/08

9087A – 198th Street, Langley, BC Canada V1M 3B1 • Telephone (604) 888-0110
Telefax (604) 888-3381 • E-Mail: info@thomsontechnology.com • www.thomsontechnology.com

TABLE OF CONTENTS

1. PRODUCT REVISION HISTORY 1

2. EQUIPMENT STORAGE 1

3. NOTES TO INSTALLER 2

3.1. UPSTREAM CIRCUIT PROTECTIVE DEVICES/ELECTRICAL CONNECTIONS 2

3.2. TRANSFER SWITCHES WITH INTEGRAL OVER CURRENT PROTECTION 2

3.3. SYSTEM PHASING-HIGH LEG DELTA SYSTEMS 3

3.4. REMOTE START CONTACT FIELD WIRING 4

3.5. DIELECTRIC TESTING 4

3.6. INSTALLATION OF OPEN TYPE TRANSFER SWITCHES 4

4. GENERAL DESCRIPTION 5

4.1. PRODUCT MODEL CODE 5

4.2. TYPICAL COMMISSIONING PROCEDURES 7

5. GENERAL THEORY OF OPERATION 8

5.1. STANDARD AUTOMATIC TRANSFER SWITCH 8

5.2. SERVICE ENTRANCE AUTOMATIC TRANSFER SWITCH 9

5.3. TEST MODES 12

6. OVER CURRENT PROTECTION 12

6.1. STANDARD TS 840 AUTOMATIC TRANSFER SWITCH 12

6.2. OPTIONAL TS 840 AUTOMATIC TRANSFER SWITCH WITH INTEGRAL OVER CURRENT PROTECTION 12

7. GENERAL NOTES ON SERVICING ATS MECHANISM 13

8. TRANSFER SWITCH MECHANISM – 100A-250 AMP 14

8.1. MANUAL OPERATION 15

9. TRANSFER SWITCH MECHANISM – 400A - 800 AMP 15

9.1. MANUAL OPERATION 15

10. RECOMMENDED MAINTENANCE 16

11. FRONT VIEW (TYPICAL) 3 / 4 POLE 100A-250A TRANSFER MECHANISM 17

12. FRONT VIEW (TYPICAL) 3 / 4 POLE STYLE 400A-800A TRANSFER MECHANISM 18

13. CONNECTION CONFIGURATION OPTIONS 19

14. CABLE TERMINAL INFORMATION 20

15. REQUIREMENTS FOR UPSTREAM CIRCUIT PROTECTIVE DEVICES 20

16. GROUND FAULT SITE TEST REQUIREMENTS 21

16.1. PERFORMANCE TEST 21

17. TROUBLESHOOTING 21

18. REPLACEMENT PARTS 24

19. PRODUCT RETURN POLICY 26

20. NOTES 26

21. PERFORMANCE TEST FORM 27

1. PRODUCT REVISION HISTORY

The following information provides an historical summary of changes made to this product since the original release.

Operating & Service Manual Version

Rev 2 05/03/ 08	Changes to incorporate reversing style ATS Motor for 100-250A transfer switches.
Rev 1 04/11/19	Change Controller From TSC 800 to TSC 80 Controller.
Rev 0 02/06/17	Original release.

Contact Thomson Technology, to obtain applicable instruction manuals or if in doubt about any matter relating to installation, operation or maintenance. Soft copy of the most current version is available at www.thomsontechnology.com.

NOTE: All information contained in this manual is for reference only and is subject to change without notice.

2. EQUIPMENT STORAGE

The following procedures are required for correct storage of the transfer switch prior to installation.

> ***CAUTION!!!***
> Failure to store equipment as specified may cause damage and void warranty.

- Before storing, unpack sufficiently to check for concealed damage. If concealed damage is found, notify Thomson Technology and the Carrier immediately.
- Repack with the original, or equivalent packing materials. Protect from physical damage. Do not stack.
- Store indoors in a clean, dry, well ventilated area free of corrosive agents including fumes, salt and concrete/cement dust. Apply heat as necessary to prevent condensation.
- The following storage temperature and humidity must be maintained: -20 to +70 °Celsius, 95% Humidity non-condensing.

3. NOTES TO INSTALLER

Before opening the transfer switch enclosure to perform any service task, or to manually transfer the mechanism, it is imperative to isolate the transfer switch from any possible source of power. Failure to do so may result in serious personal injury or death due to electrical shock.

CAUTION!!!

All installation and/or service work performed must be done by qualified personnel only. Failure to do so may cause personal injury or death.

3.1. *UPSTREAM CIRCUIT PROTECTIVE DEVICES/ELECTRICAL CONNECTIONS*

To ensure satisfactory installation of this equipment be sure to observe "Cable Terminal Information" regarding power cable connection tightness and "Requirements for Upstream Circuit Protective Devices" located in this manual.

All mechanical and electrical connections must be checked for tightness prior to placing this equipment in service to ensure proper operation and to validate applicable warranty coverage.

3.2. *TRANSFER SWITCHES WITH INTEGRAL OVER CURRENT PROTECTION*

For models of transfer switch with integral over current protection, the over current protection must be set prior to operation. The equipment will be shipped from the factory with a long-time current setting of 100% (of the equipment rating) and maximum short-time/instantaneous current and time delay settings.

WARNING!

Do Not Energize this equipment until device settings have been verified to ensure proper system protection & coordination. Failure to do so may result in equipment failure.

Refer to ***Section 5.2.2*** of this manual for additional information on operation of the Transfer switch following an over current trip condition.

Refer to information supplied with the transfer switch documentation package for adjustment procedures on the power switching units over current protection trip unit. Contact the factory if any additional information is required.

3.3. *SYSTEM PHASING-HIGH LEG DELTA SYSTEMS*

For systems using high leg delta 240V 3 phase 4 wire systems, connection of supply conductors must have the correct phasing as shown below.

WARNING

Failure to match correct system phasing will result in serious damage to the TSC 80 controller.

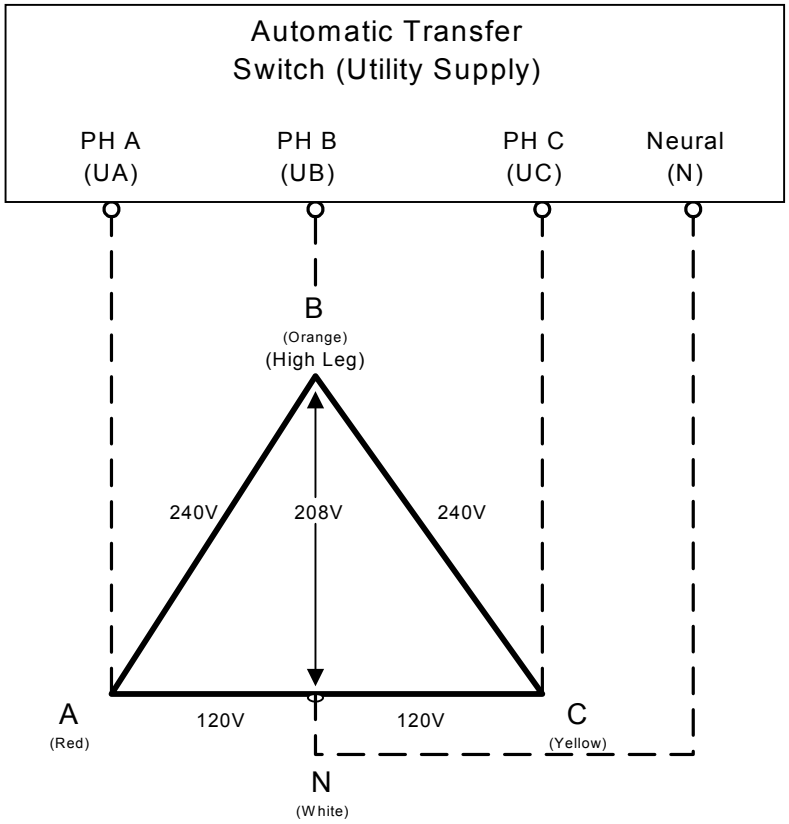

CAUTION!!!

All installation and/or service work performed must be done by qualified personnel only. Failure to do so may cause personal injury or death.

Where transfer switches are supplied without power isolation transformers (PT1 & PT2) for ATS control logic it is essential that the orientation of phase conductors of the supply source be arranged such that the phase of highest potential with respect to ground is not connected to the power supply inputs to the controller (A Phase for both supplies). Failure to do so will result in equipment damage.
Per NEC Article 384-3 (f) "The B phase shall be that phase having the higher voltage to ground on a 3-phase, 4-wire delta connected systems."

3.4. *REMOTE START CONTACT FIELD WIRING*

As a minimum, the remote engine start control field wiring shall conform to the local regulatory authority on electrical installations. Field wiring of a remote start contact from a transfer switch to a control panel should conform to the following guidelines to avoid possible controller malfunction and/or damage.

3.4.1. Minimum #14 AWG ($2.5mm^2$) wire size shall be used for distances up to 100ft (30m)[1]). For distances exceeding 100 ft. (30m) consult Thomson Technology

3.4.2. Remote start contact wires should be run in a separate conduit.

3.4.3. Avoid wiring near AC power cables to prevent pick-up of induced voltages.

3.4.4. An interposing relay may be required if field-wiring distance is excessively long (i.e. greater than 100 feet (30m)) and/or if a remote contact has a resistance of greater than 5.0 ohms.

3.4.5. The remote start contact must be voltage free (i.e. dry contact). The use of a "powered" contact will damage the transfer controller.

3.5. *DIELECTRIC TESTING*

Do not perform any high voltage dielectric testing on the transfer switch with the TSC 80 controller connected into the circuit as serious damage will occur to the controller. All AC control fuses or control circuit isolation plugs connected to the TSC 80 must be removed if high voltage dielectric testing is performed on the transfer switch.

3.6. *INSTALLATION OF OPEN TYPE TRANSFER SWITCHES*

Please refer to the factory for additional information.

Katolight Service - Master Repair Manual - Page 4212

4. GENERAL DESCRIPTION

Thomson Technology TS 840 series of Automatic Transfer Switches employ two mechanically interlocked enclosed contact power switching units and a microprocessor based controller to automatically transfer system load to a generator supply in the event of a utility supply failure. System load is then automatically re-transferred back to the utility supply following restoration of the utility power source to within normal operating limits.

The standard TS 840 series Automatic Transfer Switch is rated for 100% system load and requires upstream over current protection. The TS 840 Automatic Transfer Switch may be supplied with optional integral over current protection within the enclosed contact power switching units for applications such as Service Entrance Rated equipment. Refer to ***Section 6*** of this manual for detailed information on over current protection.

The TS 840 series transfer switches use a type TSC 80 microprocessor based controller which provides all necessary control functions for fully automatic operation. The TSC 80 controller is mounted on the door of the transfer switch enclosure and operating status is shown via LED lights. For further information on the TSC 80 Transfer Controller, refer to separate instruction manual PM063.

The power switching devices used for the Utility and Generator sources are operated by an electrically driven motor mechanism in the transfer switch. The transfer switch motor utilizes the power from the source to which the electrical load is being transferred. The mechanism provides a positive mechanical interlock to prevent both power switching units from being closed at the same time, which allows an interrupted “break-before-make” transfer sequence. The TSC 80 transfer controller provides a standard neutral position delay timer to allow adequate voltage decay during transfer operation to prevent out of phase transfers.

Note: For the purpose of this manual, the following standard nomenclature is utilized:

- Utility: to indicate the source of primary power
- Generator: to indicate the source of standby power
- Power switching device: to indicate the transfer switch power switching device

4.1. *PRODUCT MODEL CODE*

The type of TS 840 series transfer switch supplied is identified by way of a 21 digit product code which appears on the equipment rating plate (MODEL) on the door of the transfer

switch, and on the transfer switch drawings. The model code structure and definitions are as follows:

1	2	4	5	6	7	8	9	10	11	12	13	14	15	16	17	18	19	20	21
T	S	8	4																

1-3. SERIES
TS – TRANSFER SWITCH

4 & 5. MODEL
84 – 840 SWITCH

6. POLES
2 – 2 POLE
3 – 3 POLE

7. CONFIGURATION TYPE
A – ATS

8-11. AMPERAGE
0100
0150
0200
0250
0400
0600
0800

12. APPLICATION
A – STANDARD
B – SERVICE ENTRANCE

13. OPERATION TYPE
1 – OPEN TRANSITION

14. CERTIFICATION
A – UL 1008
B – CSA C22.2. No. 178

15. VOLTAGE
1Ø 3 WIRE
D – 120/240

3Ø 4 WIRE (GROUNDED NEUTRAL)
E – 120/208
G – 120/240 (DELTA)

16. CONTROLLER
1 – TSC 80

17. ENCLOSURE TYPE
D – NEMA 3R SD, ASA #61 GREY

18. UTILITY SWITCHING DEVICE
K - Molded Case Switch 100-800A
M - Molded Case Switch C/W Ther-Mag Trip 100-200A
N - Molded Case Switch C/W Electronic Trip 250-800A

19. GENERATOR SWITCHING DEVICE
K - Molded Case Switch 100-800A
M - Molded Case Switch C/W Ther-Mag Trip 100-200A
N - Molded Case Switch C/W Electronic Trip 250-800A

20. POWER CONNECTIONS
A – STANDARD

21. CONNECTION CONFIGURATION
(SEE DRAWING M-007450-00051)
A – STANDARD
B – ALTERNATE B (400-800A)
C – ALTERNATE C (400-800A)
D – ALTERNATE D (400-800A)

4.2. *TYPICAL COMMISSIONING PROCEDURES*

CAUTION:

Commissioning procedures must be performed by qualified personnel only. Ensure the Automatic Transfer Switch (ATS) Isolation Plug is disconnected prior to energizing the supply sources. Manually place the transfer switch mechanism in the neutral position prior to applying power. Failure to do so may result in equipment failure or personal injury.

Note: The ***TYPICAL AUTOMATIC TRANSFER SWITCH COMMISSIONING PROCEDURES MODEL SERIES TS 840*** (attached as "**Appendix A** ") is provided for general information only pertaining to typical site installations and applications. Contact Thomson Technology for further information as may be required.

Note: An optional hand held, plug-in Service Display Module (SDM) is available for the TSC 80 Transfer Controller. The SDM module provides an LCD screen to display additional detailed information on the operation and settings of the TSC 80 controller for simplified

servicing/trouble shooting procedures. For detailed information, refer to the separate SDM module instruction manual (PM065).

5. GENERAL THEORY OF OPERATION

5.1. *STANDARD AUTOMATIC TRANSFER SWITCH*

5.1.1. NORMAL OPERATION

When utility supply voltage drops below a preset nominal value (adjustable from 70% to 100% of nominal) on any phase, an engine start delay circuit will be initiated and the transfer to utility supply signal will be removed (i.e. contact opening). Following expiry of the engine start delay period (adjustable from 0 to 60 sec.) an engine start signal (contact closure) will be given.

Once the engine starts, the transfer switch controller will monitor the generator voltage and frequency levels. Once the generator voltage and frequency rises above preset values (adjustable from 70% to 95% of nominal), the engine warmup timer will be initiated. Once the warmup timer expires (adjustable from 0 to 60 sec.), the Transfer to Generator Supply signal (contact closure) will be given to the transfer switch mechanism. The load will then transfer from the utility supply to the generator supply via the motor driven mechanism.

The generator will continue to supply the load until the utility supply has returned. The retransfer sequence is completed as follows: when the utility supply voltage is restored to above the preset values (adjustable from 70% to 95% of nominal) on all phases, a transfer return delay circuit will be initiated. Following expiry of the Utility Return Timer (adjustable from 0 to 30 min.), the Transfer to Generator Supply signal will be removed (contact opening), then the Transfer to Utility Supply signal (contact closure) will be given to the transfer switch mechanism. The load will then retransfer the load from the generator supply back to the utility supply. **Note:** A neutral delay timer circuit will delay the transfer sequence in the neutral position (i.e. both power switching devices open) until the neutral time delay period expires (adjustable from 0 to 60 sec.).

An engine cooldown timer circuit will be initiated once the load is transferred from the generator supply. Following expiry of the cooldown delay period (adjustable from 0 to 30 min.), the engine start signal will be removed (contact opening) to initiate stopping of the generator set.

Katolight Service - Master Repair Manual - Page 4216

5.2. *SERVICE ENTRANCE AUTOMATIC TRANSFER SWITCH*

Note: This applies only to service entrance transfer switches

5.2.1. NORMAL OPERATION

Under normal conditions, the load is energized from the utility supply through the closed utility transfer power switching device. If the utility power fails, the generator will start and the load will be re-energized via the closed generator transfer power switching device.

In the normal operating mode, the Service Disconnect switch shall be in the "energized" position.

5.2.2. OVER CURRENT TRIP

Should the utility power switching device trip open due to an over current condition, TSC 80 transfer controller will initiate an engine start signal and will permit transfer of the load to the generator supply. The utility source will be locked out and the load will remain on the generator supply until the TSC 80 alarm signal is manually reset.

Refer to the TSC 80 Instruction Manual for further details on Transfer Fail operation.

Should the generator power switching device trip open due to an over current condition, TSC 80 transfer controller will initiate transfer of the load to the utility supply. The generator source will be locked out and the load will remain on the utility supply until the TSC 80 alarm signal is manually reset.

5.2.3. SERVICE DISCONNECT PROCEDURE

To perform a service disconnect (i.e. to disconnect the utility and generator supplies), the following procedure is required:

1. Move the "Service Disconnect" control switch located on the door of the transfer switch to the "Disconnected" position.

2. Verify that the "Service Disconnected" pilot light is illuminated. *If the Light is illuminated, the service has been successfully disconnected and it is safe to perform any maintenance procedures as required*. In this condition, the transfer switch is in the neutral position, with both utility and transfer power switching devices open. The transfer switch will remain in this condition, regardless of condition of the utility and generator supplies (i.e. if the utility power fails, the generator will not receive a start condition, nor will the transfer switch move to the generator position). *If the Light is **not** illuminated, further procedures are required (refer to the following procedure #4).*

3. Attach safety lockout padlock to the "Service Disconnect" control switch to prevent unauthorized change in operating condition and verify transfer switch door is locked closed. If the door is not locked, turn and remove door key.

4. If the "Service Disconnected" pilot light is **not** illuminated, the service will **not** have been successfully disconnected and it is therefore **not** safe to perform any maintenance until the following additional procedures are performed:

> ***WARNING!***
>
> ***Qualified personnel must undertake the following procedures only! Failure to do so may result in serious personal injury or death due to electrical shock.***

- Open the door to the transfer switch using a suitable tool and opening the door lock with the key.
- Visually inspect the actual position of the transfer switch mechanism. *If the position of the transfer switch mechanism is clearly in the "neutral position", the service has been successfully disconnected*.

  Note: If the position of the transfer switch mechanism is clearly in the "neutral position, the "service disconnected" pilot light may not have illuminated due to the following reasons:

  a) Utility and generator supply voltages are not present (the pilot light requires AC supply voltage to be present).

  b) The pilot light may be burnt out. The bulb should be immediately replaced with a suitably rated bulb.

  c) Failure of one or more of the sensing/logic contacts. A qualified service technician is required to trouble shoot this specific condition. Switch the utility control circuit isolation switch to the de-energized position to remove utility control power. To isolate the generator supply, remove the control circuit isolation plug. **Note:** The AC power conductors will still remain energized. Once all the control circuits are de-energized and isolated the "Service Disconnected" pilot light will not illuminate due to loss of control power.

  Note: To return the transfer switch back to normal operation, the

utility control circuit disconnect switch and control circuit isolation plug must be switched on and reconnected for correct operation.

- The transfer switch door should then be securely closed using a suitable tool and locked in the closed position with the key. Once the transfer switch door has been positively locked closed and secured and only then is, it is safe to perform any maintenance procedures as required.
- *If the position of the transfer switch mechanism is **not** in the "neutral position" further procedures are required (refer to the following procedure)*

WARNING!
Failure to positively lock closed and secure the transfer switch door may result in serious personal injury or death due to electrical shock.

- If the position of the transfer switch mechanism is **not** in the "neutral position" the transfer switch mechanism must be manually operated as follows. To operate manually, pull the manual release plunger on the mechanism, releasing the motor drive rod from motor drive arm and move the knob and yoke to the marked "**Neutral"** position.

WARNING!
Failure to move the mechanism to the Neutral Position may result in serious personal injury or death due to electrical shock.

The transfer switch door should then be securely closed using a suitable tool and locked in the closed position with the key. Once the Transfer switch door has been positively locked closed and secured and only then is, it is safe to perform any maintenance procedures as required.

WARNING!
Failure to positively lock closed and secure the transfer switch door may result in serious personal injury or death due to electrical shock.

To re-energize the load, the padlock(s) should be removed from the "Service Disconnect" control switch, and move the switch to the "Energized" position. The

transfer switch will immediately return to the utility or generator supply if within normal operating limits.

5.3. *TEST MODES*

The transfer switch may be tested utilizing the TSC 80 controller push-buttons or optional four position test switch. A simulated utility power failure condition will be activated when the test mode is selected. The transfer switch will operate as per a normal utility power fail condition.

The transfer switch will remain on generator supply until the test mode is terminated. It will then immediately transfer back to the utility supply and then continue to operate the generator set for its cooldown period then stop. **Note:** The transfer switch will automatically return to the utility supply (if within nominal limits) if the generator set fails while in the test mode.

6. OVER CURRENT PROTECTION

Thomson Technology ***TS 840*** series of Automatic Transfer Switches may be supplied with or without integral over current protection as described below:

6.1. *STANDARD TS 840 AUTOMATIC TRANSFER SWITCH*

The standard TS 840 Automatic Transfer Switch does not contain any integral over current protection and requires upstream over current protection devices for both Utility and Generator sources. The Standard TS 840 is rated for 100% continuous loading and can withstand a maximum short circuit fault current as noted in ***Section 15*** of this manual. The standard TS 840 transfer switch model without integral over current protection is identified in the product model code. Refer to ***Section 4.1*** of this manual for further details on model coding.

6.2. *OPTIONAL TS 840 AUTOMATIC TRANSFER SWITCH WITH INTEGRAL OVER CURRENT PROTECTION*

When integral over current protection is required, it may be supplied on either Utility or Generator sources or both sources. Service Entrance rated TS 840 transfer switches will have over current protection supplied on the Utility source as standard. The type of over current protection utilized is dependent upon ATS amperage size and optional features specified. For transfer switches rated 100A through 200A, over current protection is non-adjustable thermal-magnetic type trip units. For transfer switches rated 400A through 800A over current protection is adjustable electronic type with long time & instantaneous trip unit elements with optional ground fault protection elements.

Upstream over current protection devices are required on the sources feeding the TS 840 Transfer Switch that do not have integral over current protection on that source.

Note: For models of transfer switch with adjustable integral over current protection trip units, the over current protection must be set prior to operation. The equipment will be shipped from the factory with a long-time current setting of 100% (of the equipment rating) and maximum instantaneous/short-time/ground fault (if supplied) current and time delay settings.

WARNING!

Do Not Energize this equipment until device settings have been verified to ensure proper system protection & coordination. Failure to do so may result in equipment failure.

The TS 840 transfer switches with optional integral over current protection are identified in the product model code. Refer to ***Section 4.1*** for further details on model coding.

7. GENERAL NOTES ON SERVICING ATS MECHANISM

(See CAUTION! on Page #2)

When performing any service work on the transfer mechanism, it is imperative that the following be observed:

7.1. To maintain mechanical integrity, ensure that:

- All limit switches linkages are correctly adjusted to provide full travel of the power switching device toggles *without* exerting unnecessary forces associated with excessive travel. Ensure that power switching device travel far enough to reset any internal trip unit (it is more important for the toggle to go fully in the "off" direction, than in the "on" direction).
- Mechanical interlocking is correct when one power switching opens well before the other should close.
- All fasteners are adequately tightened.
- The operating linkages are not damaged or bent, and that all bearing points operate freely.

7.2. To maintain electrical integrity, ensure that:

- All electrical connections, especially power connections, are clean and adequately tightened. Corroded or loose power connections will cause destructive heating, and may cause premature tripping.
- All insulating devices are in place and in good condition.

Katolight Service - Master Repair Manual - Page 4221

- No moisture or other contamination is present.
- Electrical conductors are adequately secured away from moving parts.

7.3. To maintain operational integrity, ensure that:

- All control devices are in good condition and correctly calibrated.
- All control devices are adequately secured in their plug-in fixtures.

Only qualified personnel should undertake Service work. Failure to correctly maintain an automatic transfer switch may present a hazard to life and equipment. Full operational testing must be done prior to placing a transfer switch in service subsequent to any maintenance or repair. Any service work involving electrical components requires high-potential testing to ensure that required insulation levels have been maintained.

8. TRANSFER SWITCH MECHANISM – 100A-250 Amp

The transfer mechanism consists of the transfer motor and drive assembly, which operates a common yoke which in turn operates both utility and generator power switching devices. Since the power switching devices are oriented opposite to each other, the action of turning one power switching device off will result in turning the other power switching device on. The geometry of the mechanism ensures that one power switching device always opens before the other closes, thus maintaining the required mechanical interlocking.

The motor, operating through the motor drive arm and rod assembly, which is normally held captive to the yoke via the manual release plunger assembly, acts upon the yoke drive arm. Both power-switching device toggles are set inside the common yoke and are moved by it. There are two limit switches that are contacted by the yoke at its extremes of travel, disconnecting the motor circuit at the point of full power switching device toggle travel in the intended direction. Should adjustment be required it is advisable to consult Thomson Technology for further information.

The transfer switch mechanism has three possible positions:

a) Utility power switching device closed and generator power switching device open;

b) Generator power switching device closed and utility power switching device open;

c) Both utility and generator power switching devices open, but NEVER both utility and generator power switching devices closed at the same time.

8.1. *MANUAL OPERATION*

(See CAUTION! on Page #2)

Isolate the transfer switch from all sources of supply before opening the enclosure for manual operation. With all sources of power de-energized to the transfer switch, the control circuit isolation plug (PL12) can be unplugged to prevent subsequent operation.

To operate manually, pull the manual release plunger, releasing the motor drive rod from the motor drive arm and push the yoke in the desired direction.

Automatic operation may be regained by replacing the isolation plug. With all sources of power de-energized to the transfer switch, the control circuit isolation plug (PL12) can be re-connected. The drive system is self-engaging and will operate the transfer switch to the required position. (See manual operation instruction on front of transfer switch mechanism.)

9. TRANSFER SWITCH MECHANISM – 400A - 800 Amp

The transfer mechanism consists primarily of the transfer motor, a hub assembly, two operating rods and two power switching device operating yokes.

The reversible transfer motor drives the hub assembly, which in turn moves the operating rods that are connected to the power switching device operating yokes. The power switching device toggles are set inside the yokes and are moved by them. There are two limit switches, which are contacted by the operating yokes (one for each direction of travel), which disconnect the transfer motor power supply when the power switching devices have attained full travel. The adjuster screws located on the yokes determines the operating point of these limit switches. Should adjustment be required, it is advisable to consult Thomson Technology for further information.

The transfer switch mechanism has three possible positions:

a) Utility power switching device closed and generator power switching device open;
b) Generator power switching device closed and utility power switching device open;
c) Both utility and generator power switching devices open, but NEVER both utility and generator power switching devices closed at the same time.

9.1. *MANUAL OPERATION*

(See CAUTION! on Page #2)

Isolate the transfer switch from all sources of supply before opening the enclosure for manual operation. With all sources of power de-energized to the transfer switch, the control circuit isolation plug (PL12) can be unplugged to prevent subsequent operation.

To operate manually, pull the release plunger and operate the handle in the desired direction.

Automatic operation may be regained by replacing the isolation plug. With all sources of power de-energized to the transfer switch, the control circuit isolation plug (PL12) can be re-connected. The drive system is self-engaging and will operate the transfer switch to the required position. (See manual operation instruction on front of transfer switch mechanism.)

10. RECOMMENDED MAINTENANCE

(See CAUTION! on Page #2)

10.1. DO NOT perform dielectric tests on the equipment with the control components in the circuit.

10.2. Check if control components are tight in sockets.

10.3. Periodically inspect all terminals (load, line and control) for tightness. Re-torque all bolts, nuts and other hardware. Clean or replace any contact surfaces which are dirty, corroded or pitted.

10.4. Transfer switches should be in a clean, dry and moderately warm location. If signs of moisture are present, dry and clean transfer switch. If there is corrosion, try to clean it off. If cleaning is unsuitable, replace the corroded parts. Should dust and/or debris gather on the transfer switch, brush, vacuum, or wipe clean. DO NOT blow dirt into power switching devices.

10.5. Test the transfer switch operation. While the unit is exercising, check for freedom of movement, hidden dirt, corrosion or any excessive wear on the mechanical operating parts. Ensure that the power switching device travel is correct.

10.6. Verify all program settings on the TSC 80 controller as per the TSC 80 component calibration label on the rear cover of the controller.

10.7. Transfer Mechanism 100-250A confirm that the yoke operates freely on the yoke pivot bushings. Should lubrication be required, apply medium weight (SAE 20) oil sparingly at these points.

10.8. Transfer Mechanism 400A-1200A- ensure that the manual handle moves freely on the hub when the lock pin is disengaged. If lubrication is necessary, apply medium weight (SAE 20) oil sparingly.

10.9. Transfer Mechanism 400A-800A -yoke pivot bearings and rod ends are permanently lubricated and do not require maintenance.

10.10. The motor and gearbox are permanently lubricated, and should not require attention under normal operating circumstances.

11. FRONT VIEW (TYPICAL) 3 / 4 POLE 100A-250A TRANSFER MECHANISM

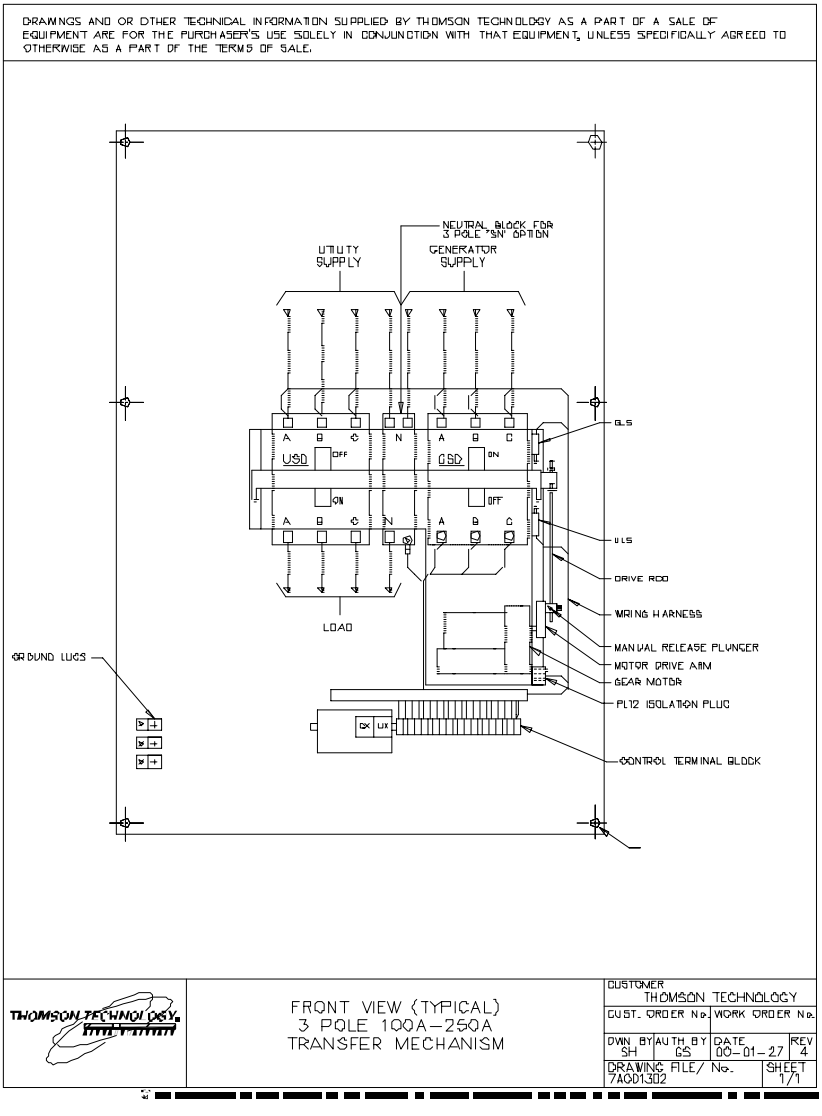

12. FRONT VIEW (TYPICAL) 3 / 4 POLE 400A-800A TRANSFER MECHANISM

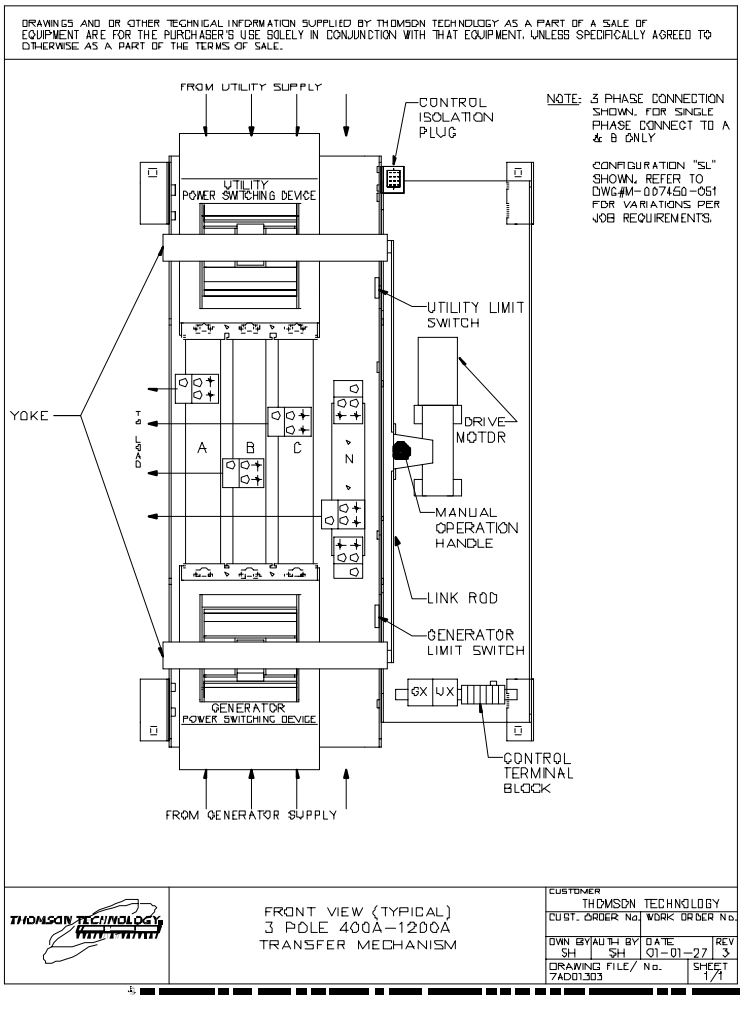

13. CONNECTION CONFIGURATION OPTIONS

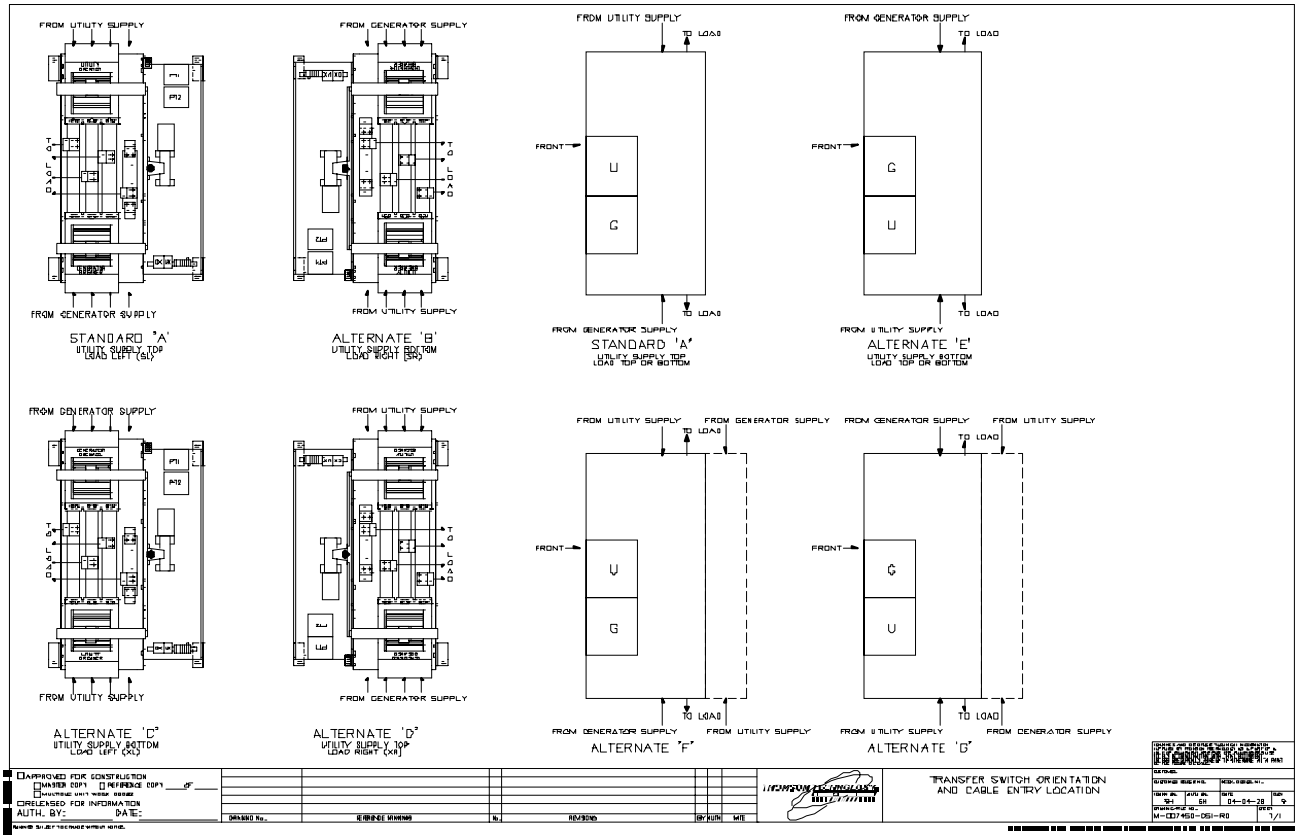

Katolight Service - Master Repair Manual - Page 4227

14. CABLE TERMINAL INFORMATION

BASIC MODEL	TERMINAL RATING		CONNECTION TIGHTNESS (In-lbs)	
	QTY PER PHASE	RANGE	TERMINAL MOUNTING SCREW	CABLE CLAMP
TS 84xA-0100	1	#14-1/0	120	50
TS 84xA-0150	1	#2–4/0	120	120
TS 84xA-0200	1	#6–350MCM	150	275
TS 84xA-0250	1	#6–350MCM	150	275
TS 84xA-0400[1]	2	2/0–500MCM	72	275
TS 84xA-0600[1]	2	2/0–500MCM	72	275
TS 84xA-0800[1]	3	2/0–500MCM	110	375

1. Optional terminal ratings are available in some models – Consult Thomson Technology.
2. For other model types not shown, contact Thomson Technology for further information.

15. REQUIREMENTS FOR UPSTREAM CIRCUIT PROTECTIVE DEVICES

BASIC MODEL	MAX. VOLTAGE	RATED CURRENT (A)	WITHSTAND CURRENT RATING AMPS (RMS) 1				
			With Upstream Circuit Breaker Protection			With Upstream Fuse Protection	
			@240V			@ Up to 240V	Fuse Type
TS 84xA-0100	240	100	65,000			100,000	T, J
TS 84xA-0150	240	150	65,000			100,000	T, J
TS 84xA-0200	240	200	65,000			N/A	T, J
TS 84xA-0250	240	250	65,000			100,000	T, J
TS 84xA-0400	240	400	65,000			100,000	T, J
TS 84xA-0600	240	600	65,000			100,000	T, J
TS 84xA-0800	240	800	65,000			100,000	Consult Factory

1. Standard ratings only are shown. Consult Thomson Technology for versions with higher withstand current ratings.
2. For other model types not shown, contact Thomson Technology for further information.

Fuse ratings shown are maximum allowable to permit use of the transfer switch in application with available fault current not exceeding that shown. Consideration must be given to fuse sizing when fuses also provide overload protection.

Please refer to the factory for further information on upstream protection requirements if required.

16. GROUND FAULT SITE TEST REQUIREMENTS

Per NEC and UL1008, a ground fault protected system shall be performance tested when first installed on site. A written record of this shall be made and be available to the authority having jurisdiction. A form is provided at the back of this manual for this purpose – see ***Section 21***.

Confirm and record actual trip setpoints in the form provided which is to be made available on request by inspection authority.

16.1. *PERFORMANCE TEST*

Qualified Field Service technicians require a calibrated current injection test apparatus and must be knowledgeable in breaker testing to provide primary neutral CT injection up to or greater than the trip setpoint as selected by the responsible party. As indicated in the NEC, the maximum setting of the ground fault protection shall be 1200 amps, and the maximum time delay shall be 1 second for ground faults equal to or greater than 3000 amps.
The inspection authority should be contacted to confirm actual test requirements as these may vary by region or local code requirements.

The interconnected system shall be evaluated to ensure compliance with the appropriate schematic drawings. The proper location of sensors and power cabling shall be determined. The grounding points of the system shall be verified to determine that ground paths do not exist that would bypass the sensors. The use of high-voltage testers and resistance bridges may be required. A simulated fault current is to be generated by a coil around the sensors. The reaction of the circuit-interrupting device is to be observed for correct response. The results of the test are to be recorded on the test form provided.

17. TROUBLESHOOTING

CAUTION!!!

All trouble shooting/ service work performed must be done by qualified personnel only. Failure to do so may cause personal injury or death.

Note: An optional hand held, plug-in Service Display Module (SDM) is available for the TSC 80 Transfer Controller. The SDM module provides an LCD screen to display additional detailed information on the operation and settings of the TSC 80 controller for simplified servicing/trouble

shooting procedures. For detailed information, refer to the separate SDM module instruction manual (PM065).

Symptom	Possible Causes
Will not re-transfer to utility source upon restoration	- Isolation plug out - Utility disconnect switch is in the de-energized position (Service Entrance Rated ATS). Switch to the Energized position. - A test mode has been activated (check TSC 80 status LED) - Utility voltage is below the pre-programmed limits (check utility source for adequate voltage) - A loose control connection - Faulty motor limit switch - Defective motor - TSC 80 has incorrect voltage programming jumper setting for correct system voltage - Defective TSC 80 controller (verify output signals with circuit board mounted diagnostic LED's) - TSC 80 has "Transfer Fail" alarm activated as indicated by flashing Load on Utility LED. Determine cause of alarm and rectify before TSC 80 is reset
Will not transfer to generator source upon failure of utility source	- Isolation plug out - Generator set not producing enough voltage/frequency or output circuit breaker open - TSC 80 has incorrect voltage programming jumper setting for correct system voltage - Warm-up time delay function has not timed out yet (verify TSC 80 timer setting) - A loose control connection - Faulty motor limit switch - Defective motor - Defective TSC 80 controller (verify output signals with circuit board mounted diagnostic LED's) - TSC 80 has "Transfer Fail" alarm activated as indicated by flashing Load on Generator LED. Determine cause of alarm and rectify before TSC 80 is reset
Transfer to generator source without a power failure in the utility source	- A test mode has been activated (check TSC 80 status LED) - Utility supply voltage is slightly below voltage sensing setpoints. Verify TSC 80 has correct voltage programming jumper setting for system voltage - Defective TSC 80 controller (verify output signals with circuit board mounted diagnostic LED's) - Utility power switching device has tripped due to an over current condition and TSC 80 "Transfer Fail" alarm activated as indicated by flashing Load on Utility LED. Determine cause of alarm and rectify before TSC 80 is reset.
Generator does not start up or stop when it should	- Verify remote engine control panel is set for automatic mode

Symptom	Possible Causes
Will not re-transfer to utility source upon restoration	- Isolation plug out - Utility disconnect switch is in the de-energized position (Service Entrance Rated ATS). Switch to the Energized position. - A test mode has been activated (check TSC 80 status LED) - Utility voltage is below the pre-programmed limits (check utility source for adequate voltage) - A loose control connection - Faulty motor limit switch - Defective motor - TSC 80 has incorrect voltage programming jumper setting for correct system voltage - Defective TSC 80 controller (verify output signals with circuit board mounted diagnostic LED's) - TSC 80 has "Transfer Fail" alarm activated as indicated by flashing Load on Utility LED. Determine cause of alarm and rectify before TSC 80 is reset
Will not transfer to generator source upon failure of utility source	- Isolation plug out - Generator set not producing enough voltage/frequency or output circuit breaker open - TSC 80 has incorrect voltage programming jumper setting for correct system voltage - Warm-up time delay function has not timed out yet (verify TSC 80 timer setting) - A loose control connection - Faulty motor limit switch - Defective motor - Defective TSC 80 controller (verify output signals with circuit board mounted diagnostic LED's) - TSC 80 has "Transfer Fail" alarm activated as indicated by flashing Load on Generator LED. Determine cause of alarm and rectify before TSC 80 is reset
No time delay when there should be	- Verify time delay setting of the TSC 80 controller
Power is not available at the load terminals but the utility or generator power switching device appears to be closed to a live source	- The power switching device's over current protection unit has opened due to a fault on the system. ". Correct the fault, and manually reset the power switching device in the transfer switch by moving it off and then on again with the manual operating handle - Limit switch incorrectly adjusted
The transfer switch has completed a transfer, but the motor has overheated and the internal thermal protector has opened	- Limit switch failure or improper adjustment has failed to disconnect motor - Binding or jamming of the transfer mechanism

Note

There are no user serviceable components located on the TSC 80 printed circuit board. If the TSC 80 controller is deemed to be defective it must be returned to the Thomson Technology Factory for repair or replacement. Please refer to section 19 for further detailed on product return procedures required.

18. REPLACEMENT PARTS

Replacement parts are available for the transfer switch as follows:

Note

When ordering replacement parts please provide the following information:

-Transfer Switch Model code (e.g. TS 843AA0200AS)

-Transfer Switch Serial Number (e.g. W-022345)

The above information can be found on the transfer switch equipment rating plate located on the outside of the ATS door.

Component Description	Thomson Technology Part Number	Comments
TSC 80 Controller Board	005712	Must set Program Jumper prior to use. Refer to TSC 80 Instruction Manual.
TSC 80 Lexan Faceplate	005336	Contact Thomson Technology Service Dept for installation procedures.
TSC 80 Rear Cover	005707	
Limit Switch 1 n/o, 1 n/c (all ATS Models)	004929	Must install and adjust for proper operation before use. Contact Thomson Technology Service Dept for installation/adjustment procedures
Unidirectional** Transfer Switch	001077	Motor is supplied with gear box

Component Description	Thomson Technology Part Number	Comments
Motor (100A-250A) 1 PH 120V		assembly. Contact Thomson Technology Service Department for installation procedures
OR Reversing** Transfer Switch Motor (100A-250A) 1 PH 120V	004565	Motor is supplied with gear box assembly and starting capacitor. Contact Thomson Technology Service Department for installation procedures
Transfer Switch Motor (400A-1200A) 120V 1/10 hp 1 PH	001075	Motor is supplied with gear box assembly. Contact Thomson Technology Service Department for installation procedures
120VAC Auxiliary Plug-in Relay, 11 pin Square (UX/GX)	001278	Must ensure coil voltage is correct
120VAC Auxiliary Plug-in Timer	001515	Must ensure coil voltage is correct
100VA Control Transformer	002159	

** Motor types used on 100A-250A transfer switches were changed during the first quarter of 2005 from unidirectional to reversing style motors.
Note: A reversing type motor cannot be used as a direct replacement for a unidirectional motor due to mechanical and electrical wiring differences therefore when ordering replacement motors, the same motor type must be specified to ensure it matches the original mechanism design.

To distinguish between the two different motor types, refer to the following product descriptions:

- Unidirectional Transfer Switch Motor: 2 wire leads extend from the motor. ATS Terminal block has number “M1” terminal which connects to this type of motor.
- Reversing Transfer Switch Motor: 3 wire leads extend from the motor. ATS Terminal block does not contain terminal number “M1”. Reversing motor also uses a starting capacitor which is mounted above the motor under the ATS mechanism.

For other parts not listed, please contact Thomson Technology.

19. PRODUCT RETURN POLICY

Thomson Technology uses a Return Material Authorization (RMA) process. Please complete the Return Authorization Request Form (available on our web page) for return of goods, warranty replacement/repair of defective parts, or credit consideration and fax to the appropriate department.

Returns only: Sales Fax (604) 888-5606

Warranty replacement/Warranty Repair: Service Fax (604) 888-3370.

Upon receipt of your request, Thomson Technology will confirm with a copy of our Order Acknowledgement via fax advising the RMA number which should be used to tag the defective controller prior to shipment.

20. NOTES

21. PERFORMANCE TEST FORM

This form should be retained by those in charge of the building electrical installation in order to be available to the authority having jurisdiction.

Date	Personnel	Tests performed	Comments
		Interconnection evaluation	
		Grounding point evaluation	
		Fault current test:	
		Ground fault settings - _____	
		Simulated current - _____	
		Results - _____	

APPENDIX "A"

THOMSON TECHNOLOGY
A Subsidiary of Regal-Beloit Corporation
POWER & CONTROL

TYPICAL AUTOMATIC TRANSFER SWITCH COMMISSIONING PROCEDURES Model Series TS 840/870

Note: The following commissioning procedures are provided for general information only pertaining to typical site installations and applications. Contact Thomson Technology for further information as may be required.

CAUTION

Commissioning procedures must be performed by qualified personnel only. Ensure the Automatic Transfer Switch (ATS) Isolation Plug is pulled prior to energizing the supply sources. Manually place the transfer switch mechanism in the neutral position by opening both Utility and Generator Power Switching devices prior to applying power. Failure to do so may result in equipment failure or personal injury.

NOTE: An optional hand held, plug-in Service Display Module (SDM) is available for the TSC 80 Transfer Controller. The SDM module provides an LCD screen to display additional detailed information on the operation and settings of the TSC 80 controller for simplified servicing/trouble shooting procedures. For detailed information, refer to the separate SDM module instruction manual (PM065).

Pre-Commissioning Checks Prior to Commissioning Agent On-Site (to allow loads to be supplied prior to final commissioning).

1) Verify supply source voltage to be applied to the transfer switch is of the correct nominal value. Confirm this to be the same as listed on the ATS drawings and the ATS equipment label.

NOTE: The factory default system voltage setting for multi-voltage TS 840/870 transfer switches is **480VAC,** which will be indicated by a letter "Y" in the voltage code as shown on the ATS model code (e.g. TS 873A0250A1A**Y**1AKKAA) and on a warning tag attached to the isolation plug. For other system voltages refer to the ATS instruction manual for re-configuring procedures prior to energization. **FAILURE TO RE-CONFIGURE ATS VOLTAGE TO MATCH SYSTEM VOLTAGE WILL RESULT IN EQUIPMENT MALFUNCTION AND DAMAGE.**

If ATS voltage is changed, record the new voltage on the TSC 80 Component Calibration Label on the rear cover of the controller.

2) For 240V High Leg Delta systems refer to the ATS instruction manual for correct phasing required and re-configuring procedures. **FAILURE TO OBTAIN THE CORRECT ATS PHASING WILL RESULT IN EQUIPMENT MALFUNCTION AND DAMAGE.**

3) Confirm cable size is correct for the lugs supplied in the transfer switch (line and load). Confirm the cables were meggered by the electrical contractor to ensure no cross phase connections or conduction to ground.

4) Confirm cable lugs are properly torqued. Confirm cable installation; ensure the cables do not interfere with normal equipment operation or which may cause component damage.

5) Manually operate the transfer mechanism to the appropriate source of supply. Leave the Isolation Plug disconnected until final Transfer Switch Commissioning is to be completed.

Final Commissioning

1) Verify installation of the Automatic Transfer Switch as per installation manual and verify wiring (also see the Pre-Commissioning Checks). Confirm phase, neutral and grounding conductors are installed as per electrical code requirements***. Note***: Confirm neutral conductors of both sources are correctly installed and are solidly grounded for 3 phase 4 wire configurations.

2) Check for mechanical damage (shipping or installer).

3) Check for cable interference with mechanical moving parts or the motor brake on 100A-250A ATS mechanism.

4) Verify correct control wire interconnects to the engine/generator set auto start/stop circuitry. Ensure the engine controller automatic start circuit does not draw more than 5.0 amps (resistive) across the TSC 80 Engine Start contact. The TSC80 Engine Start contact is voltage free and the only voltage measured should result from the engine

controllers internal control logic. **Note**: The ATS Engine Start contact CLOSES to start the engine and OPENS to stop the engine.

5) Place the generator engine controller in the "OFF" position and open the generator local circuit breaker.

6) Ensure the ATS isolation plug is disconnected prior to application of voltage of the supply sources.

7) Energize the utility supply and the generator supply sources and verify these meet the correct voltage, phasing and phase rotation for the ATS and system. Once these have been confirmed to be correct, de-energize both sources before installing the isolation plug.

8) Once the isolation plug is connected, the ATS and system load may be energized with utility power once the site electrical contractor and or owner (as required) give authorization to proceed.

9) If Utility power is within nominal limits, the ATS should transfer to the utility source. To determine correct operation, observe the following on the TSC 80 faceplate:

   i) Utility Source green LED is On
   ii) Green LED above mimic bus for the Utility source is On
   iii) Load green LED is On

10) To verify all LED's are operational, perform a "LAMP TEST" operation (lamp test is initiated by pressing and holding the 2 push buttons on the TSC 80 faceplate simultaneously On until all the LED's change state).

11) Prior to operating the generator, ensure it is ready to be energized and the site electrical contractor and/or owner (as required) give authorization to proceed. In preparation for operation, turn the generator's engine control switch to the "Automatic" start position.

12) To transfer the generator on load, perform a load test by pressing the Utility Power Fail Simulate pushbutton On and holding it for approximately 5 seconds until the LED light above the push button changes state. The engine should start following the 3-second engine start delay period and the transfer switch will begin transferring to the generator supply once the 2-second engine warm-up timer expires. **Note:** the engine warm-up timer will only begin timing once the generator's output rises above 90% nominal voltage and 90% nominal frequency. Once the Utility power switching device opens, the transfer switch mechanism will pause in the neutral position for the 3-second neutral delay period, then the mechanism will complete the transfer and close the generator power switching device. To determine correct operation, observe the following on the TSC 80 faceplate:

   i) Generator Source green LED is On
   ii) Red LED above mimic bus for the generator source is On
   iii) Load green LED is On
   iv) Utility Source green LED is On
   v) Utility Power Fail Simulate yellow LED is ON
   vi) Green LED above mimic bus for the Utility source is OFF

13) To terminate the test, press the Utility Power Fail Simulate push button on the TSC 80 faceplate again and hold until the LED above the pushbutton changes state. The transfer switch will begin transferring to the utility supply following the 2-minute utility return delay period. **Note:** the utility return delay timer will only begin timing if the utility voltage is above 90% nominal on all phases. Once the Generator power switching device opens, the transfer switch mechanism will pause in the neutral position for the 3-second neutral delay period, then the mechanism will complete the transfer and close the Utility power switching device to return the load to the Utility source. Once the load has transferred onto the utility source, the engine will continue to run for the 2-minute cool down time delay period and will then it will automatically stop.

14) Perform a power outage test by opening the upstream utility feeder breaker. The TSC 80 controller Utility supply LED lights will de-energize; the generator set will start after the 3-second engine start delay has expired. The generator should transfer on load as described in item #12 above.

15) Return the transfer switch to utility power by re-closing the upstream utility breaker. The load should re-transfer back to the utility supply and the engine should stop as described in item #13 above.

16) Repeat tests #12 through 14 two (or more) times to ensure correct operation.

17) Automatic Plant Exercise Operation **(OPTIONAL):** If an automatic weekly plant exercise feature is desired, press the GENERATOR EXERCISE Mode push button on the TSC 80 faceplate. Hold the push button on for approximately 5 seconds until the LED light changes state. Once the mode is initiated, the engine will immediately start and the generator will transfer on load as previously described. **Note:** The generator may or may not transfer on load, which is dependent on the TSC 80 program setting. The factory default setting is for a "Load Transfer" plant exercise test. The engine will remain operating on load until the plant exercise time delay period of 20 minutes expires, then the load will re-transfer back to the utility supply following the 2-minute utility return timer. The engine will be automatically re-tested on load every week (i.e.7 days) at the same time of day that the first test was initiated. Refer to TSC 80 manual for further information.

18) On completion of commissioning ensure all controls are left in automatic.

19) If required, forward document or drawing updates to Thomson Technology if revisions are required and provide the end user with a set of marked-ups to be retained on site.

20) Ensure copies of manuals for the equipment are on site.

21) Record and forward list of deficiencies to the appropriate parties where applicable.

Instructions for Transfer Switches Automatic (Solid State Logic), Manual, and Non-Automatic 100-1000 Amps

I.L. 14477-E
File 29-900

DANGER

VOLTAGE MAY BE PRESENT IN THIS EQUIPMENT WHICH CAN CAUSE SEVERE PERSONAL INJURY OR DEATH.

USE EXTREME CAUTION WHEN INSTALLING OR ADJUSTING THIS EQUIPMENT.

Index **Page**

The Transfer Switch	1
Types of Protection	1
Installation	1
Types of Switches	5
Transfer Switch Catalog Number Explanation	6
Transfer Switch Options	7
Main Contact, Intelligence and Transfer Systems	11
Troubleshooting	11
Operation of the Transfer Mechanism	12
Maintenance	14
Sequence of Operation	15
Storage	16
Adjustments	16
Option Accessory Adjustments	17

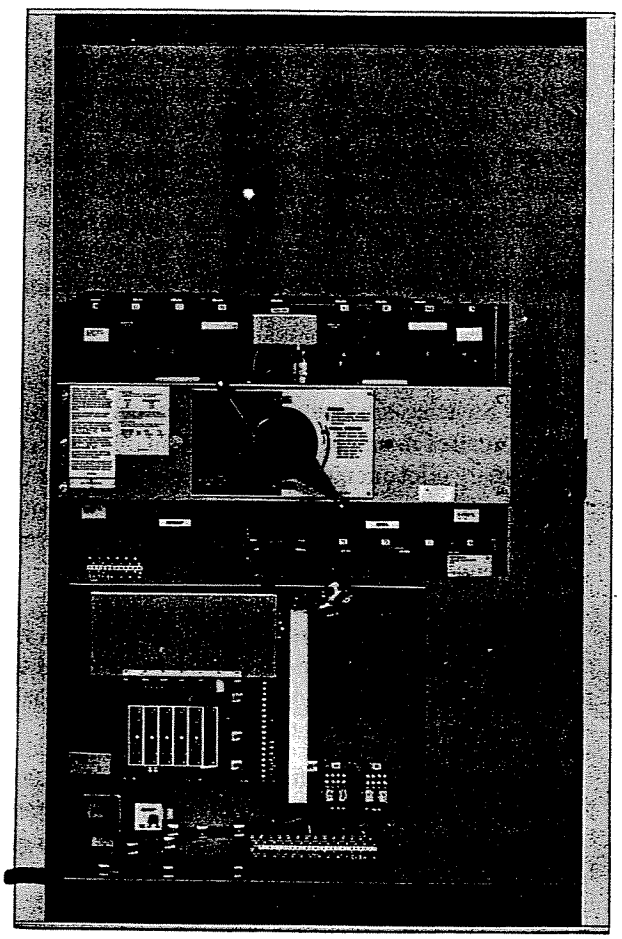

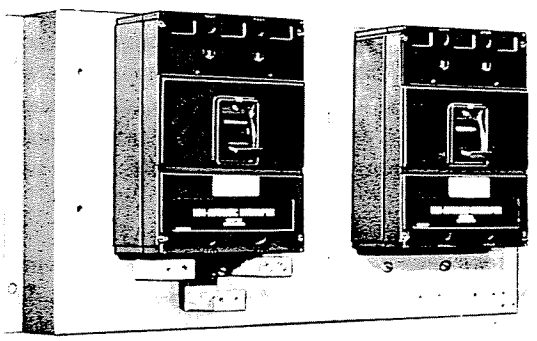

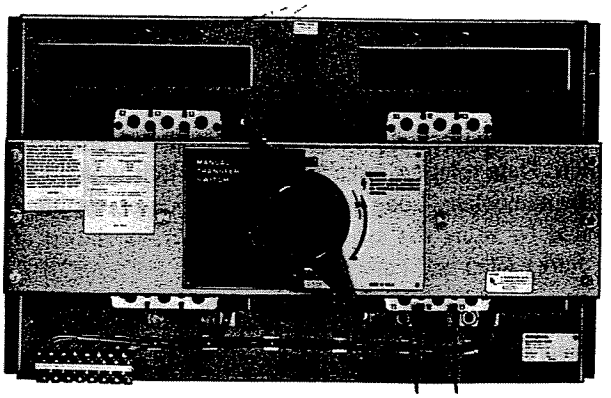

Effective July, 1990 Supersedes I.L. 14477-D dated March, 1983

THE TRANSFER SWITCH

Transfer switches are used to protect critical electrical loads against loss of power. The transfer switch is connected to both normal and emergency circuits. In the event that power is lost from the normal source, the transfer switch transfers the load to the emergency or secondary source. Transfer is automatic if switch is automatic type; or must be done manually if manual or non-automatic type switches. The load is automatically/manually transferred back to the normal source when that power is restored.

In automatic transfer switches, when the normal power supply fails or falls below a preset voltage, the switches intelligence system initiates transfer. If the emergency source is commercial power, and it's present, the switch will immediately transfer to emergency. If the emergency source is a standby generator, the transfer switch initiates generator starting and transfers to the emergency source when sufficient generator voltage appears until normal power is restored, at which time it will retransfer to normal and initiate engine shutdown. The switch is suitable for use with commercial power or engine generator emergency sources without modifications. In the event the normal source fails and for some reason the emergency source doesn't appear, the switch will remain connected to the normal source until the emergency source appears, at which time transfer will be initiated; conversely, if connected to the emergency source with the normal source out and for some reason the emergency source should fail, the switch will remain connected to the emergency source.

Transfer switches covered by this manual range in rating from 100 to 1000 amperes. Ampere rating is determined by the rating of the circuit interrupters or optional automatic circuit breakers employed. The switch is designed to carry its full rated load current whether inductive or resistive. They are available either with their own enclosures or open for mounting in control panels, and they are supplied for either front-connecting cables or rear-connecting bus work.

The rating label is prominently affixed to the transfer switch. Data relating to each specific switch is included on the nameplate. Long and trouble free equipment life is assured by using the switch within the limits shown on the rating label and nameplate.

TYPES OF PROTECTION

Automatic transfer switches provide full-line voltage protection to a power circuit. Optional overcurrent/short circuit protection can be provided (Options 16/17/37) adding overcurrent protection to the connected power circuit.

Full-Line Voltage Protection (Standard on Automatic Units)

Field adjustable solid-state voltage-sensing logic is provided which monitors each phase of the normal power supply. The close differential adjustment is factory set to drop out when the monitored voltage drops below 70% of normal, and to pick up again at 90% of line voltage. Thus, if any phase of the normal power drops below the dropout setting, the logic will cause the transfer switch to seek the secondary power supply. When the line voltage is restored to the pickup setting in all phases, the switch transfers back to the normal power supply.

Overcurrent Protection (Options 16/17/37)

Transfer panels using breaker type construction can be provided to offer overcurrent protection by the addition of thermal-magnetic trip units to either one or both of the circuit interrupters. This feature of the transfer panel makes additional disconnect/overcurrent apparatus unnecessary. Short circuit protection is standard.

NOTE: When overcurrent protection, Options 16, 17, or 37 is selected and the circuit breaker containing this feature trips, the switch will not initiate transfer, nor will the engine start. The reason for this is that if the breaker trips, the fault is on the load side of the transfer switch, and it is undesirable to transfer a source into a faulted or overloaded condition. Reset of the tripped device can either be accomplished by the manual operator or electrically when Options 11C or 11D is supplied.

INSTALLATION

Transfer Switches are factory wired and tested. Installation simply requires mounting and connection of power cables and auxiliary pilot circuits. Do not remove protective packing until ready for complete installation. Protect switch at all times from excessive moisture, construction grit, metal chips, plaster, etc.

After uncrating the transfer panel, first make a visual check to see that there are no broken or damaged components and that there is no evidence of bent or distorted metal or loose wires as a result of rough handling.

Remove hardware, if furnished, securing switch to packing box or crate. Any lifting device must be attached to the switch mounting holes or mounting channels only. Do not lift switch at any other points. Protect the switch from impact at all times.

Remove any tied-down accessories, cardboard tubes, shipping wedges, and on larger units, remove tie-down

strings on the manual handle to assure that it turns freely in a counterclockwise direction. Options furnished for separate mounting; i.e., pushbuttons, etc., should be wired to the panel as indicated on the schematic. Jumper wires as indicated on the schematic should also be removed.

The transfer panel must be mounted on a flat, rigid supporting surface and in an atmosphere free of excessive moisture and excessively high temperatures, except those units approved for special environments. The panels provide ample room to permit cable entry from top, bottom or sides; however, care should be taken to prevent cables from retarding the action of relays and from covering the logic in a way that restricts adjustments. Maintain proper electrical clearance between live metal parts and grounded metal.

DANGER

POWER CONDUCTORS MAY HAVE VOLTAGE PRESENT WHICH CAN RESULT IN PERSONAL INJURY OR DEATH.

DE-ENERGIZE ALL POWER OR CONTROL CIRCUIT CONDUCTORS TO BE CONNECTED TO THE TRANSFER SWITCH BEFORE TERMINATING TO THE UNIT.

Power Cable Connections

Test all power cables prior to connection to the unit to ensure that conductors or cable insulation has not been damaged while being pulled into position. Power cables are to be connected to solderless screw type lugs located on the transfer switch circuit interrupters. Refer to wiring diagrams supplied with unit for power termination identification verify that the lugs supplied will accommodate the power cables being used. Standardly equipped transfer switches will accommodate the wire sizes as noted in Table 1.

Table 1

Transfer Switch Amp Rating	Wire Size Range	Number of Cables per Phase
100	#4 – 1/0	1
150-300	#3 – 350 MCM	1
400	250-500 MCM	2
600 (3P)	#1 – 500 MCM	2
600 (4P)	3/0 – 400 MCM	3
800	3/0 – 400 MCM	3
1000	4/0 – 500 MCM	4

Carefully strip insulation from the power cables avoiding nicking or ringing of the conductor strands. Prepare stripped conductor termination end by cleaning with a wire brush. If aluminum conductors are used, apply an appropriate joint compound to the clean conductor surface area. Tighten cable lugs to the torque identified on the label affixed to the unit immediately adjacent to the lugs.

WARNING

IMPROPER POWER CABLE CONNECTIONS CAN CAUSE EXCESSIVE HEAT GENERATION AND SUBSEQUENT EQUIPMENT FAILURE.

The engine's starting controls must be wired to the panel's engine start contact as indicated on the schematic wiring diagram.

Reread and understand all instructions on the diagrams and labels attached to the switch.

After the panel is installed, a check should be made to assure that the manual handle operates both breakers properly. Handle operating procedure is printed on the nameplate.

First check Transfer Switch nameplate for rated voltage. It should be the same as the normal and emergency line voltages. Operating the switch on improper voltage can cause damage.

If Option 4 is furnished, an engine start signal will be present for a period of time equal to the timer setting when the switch is first energized. To avoid starting the engine during this time, turn the generator controls to the OFF position.

CAUTION

The Transfer Switch will now be energized. Proceed with care!

Close the normal source circuit breaker. The switch should be in normal position.

Use an accurate voltmeter to check phase-to-phase and phase-to-neutral voltages present at the Transfer Switch normal terminals.

Close the emergency source circuit breaker.

Manually start the engine-driven generator at the set. (If used.)

Use an accurate voltmeter to check phase-to-phase and phase-to-neutral voltages present at the Transfer Switch emergency terminals.

If necessary, adjust the voltage regulator on the generator according to the manufacturer's recommendations. The Automatic Transfer Switch will respond only to rated voltage and frequency specified on the nameplate.

If the switch is operated manually with the Normal source connected, the switch will cycle back to Normal since it is the preferred source. Handles on 150 amp and larger switches free-wheel, so that the mechanism operates and the handle ratchets so that the handle can be held while the switch operates without causing injury.

Checks should be performed by a competent electrician familiar with the schematic circuitry of the transfer panel.

All components mounted on the transfer panel are identified with their specific function; and all of the wiring, with the wire number as shown on the schematic wiring diagram.

Shut down the engine-driven generator, then put starting control in "Automatic" position.

Place the Auto/Test Switch in the test position. The engine should start and run usually within 15 seconds.

The Transfer Switch will operate to the emergency position. If Accessory 1 or 2, or both, are used, the transfer will occur after a time delay.

The Transfer Switch will operate back to normal after Accessory 3's time delay.

Accessory 4 allows the engine to continue to run for an additional unloaded running time.

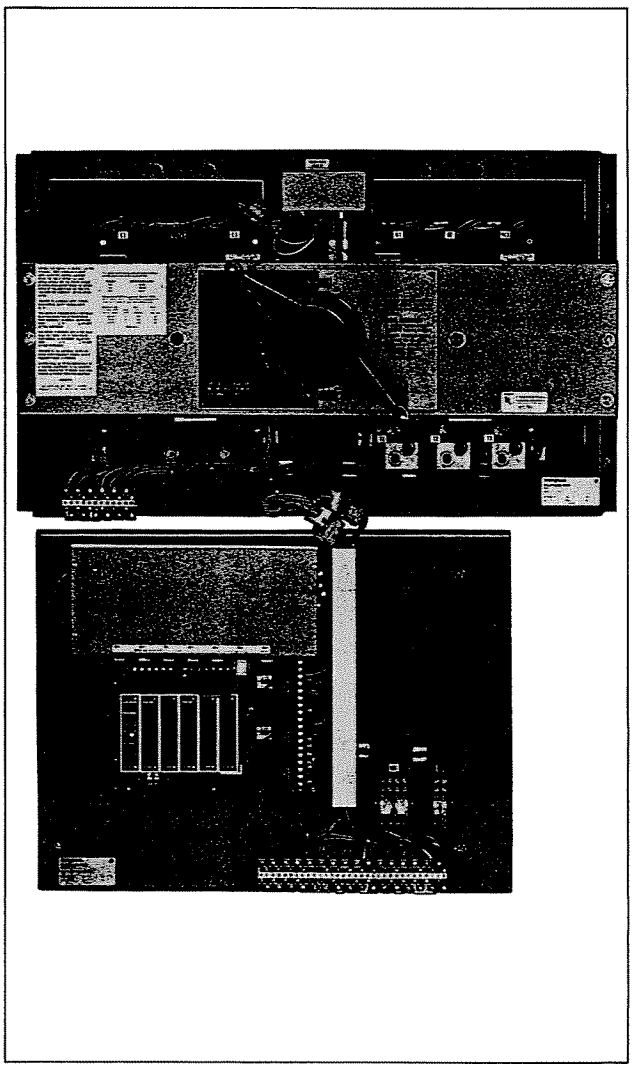

Automatic Transfer Switch

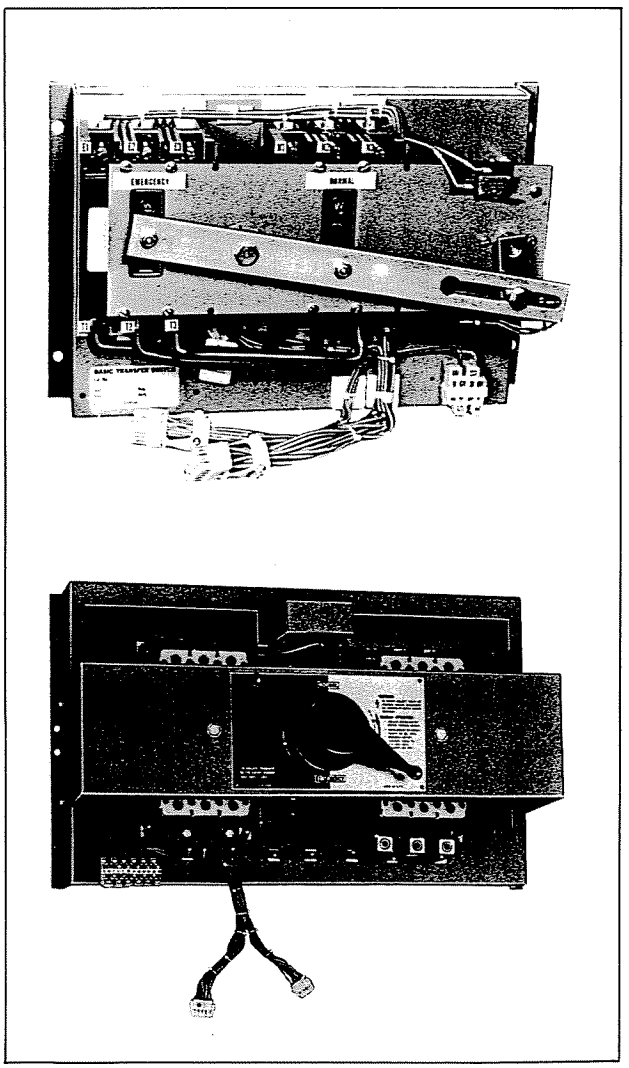

Basic Transfer Switches

BE SURE THE TEST SWITCH IS RETURNED TO THE AUTO POSITION TO INSURE PROPER OPERATION.

TYPES OF SWITCHES

Transfer Switches are offered in four types:

1. Automatic Transfer Switches

Automatic transfer switches that automatically perform the transfer function.

They consist of three basic elements:

1. Main contacts to connect and disconnect the load to and from the sources of power.

2. Intelligence/supervisory circuits to constantly monitor the condition of the power sources and thus provide the intelligence necessary for the switch and related circuit operation.

3. Transfer mechanism to effect the transfer of the main contacts from source to source.

2. Basic Transfer Switches

This switch is designed for use with customer-furnished controls. The basic transfer switch is similar to the automatic transfer switch except that the intelligence circuit is omitted, thus all automatic sensing devices and relays are omitted.

Basic switches are UL, Inc., Component Listed. They can be applied up to 600 Volts Ac maximum and have an operating motor or coil at 120 Volts, 50/60 Hz.

3. Manual Transfer Switches

Manually-operated transfer switches are available with a single operating handle, Type MTSS, or the Type MTSD which is dual handle operated. Type MTSS utilizes a common operating mechanism with a single, free-wheeling handle mounted across the front of the two breakers for mechanically connecting and operating the individual breaker handles. With the Type MTSD, individual breaker handles are used for On-Off operation. Transfer of power is accomplished by true hand operation (not power assisted) with both types.

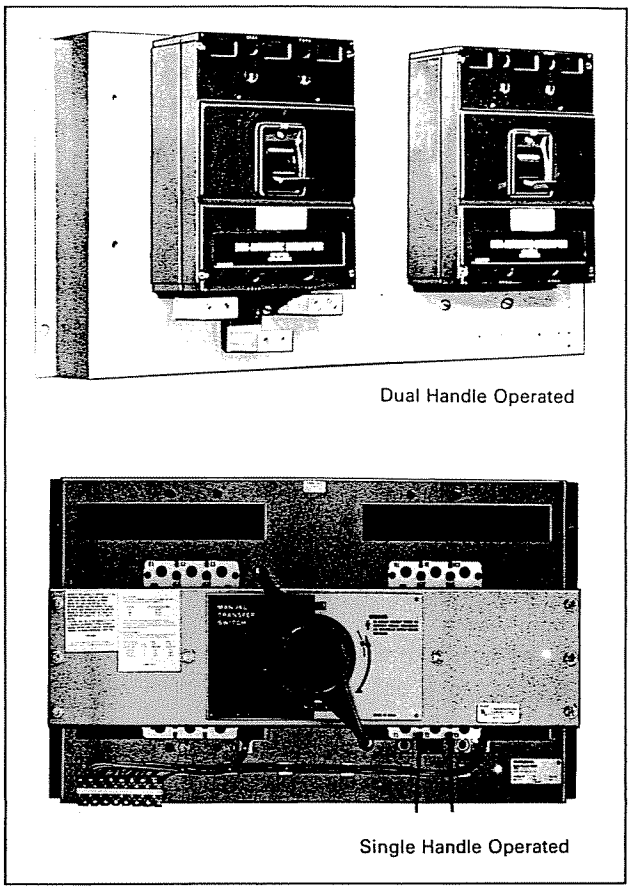

Dual Handle Operated

Single Handle Operated

Manual Transfer Switches

Manual switches can be applied up to 600 Volts Ac maximum. All options selected are furnished suitable for use only on 120 Volt Ac, 50/60 Hz circuits. A control transformer is not furnished.

4. Non-Automatic Switches

This type of switch combines the electrical operation feature of an automatic transfer switch with manual transfer initiation feature of the manual transfer switch.

The switch electrically transfers power only when the appropriate pushbutton housed on the enclosure door is depressed by operating personnel. The switch is equipped with a control panel identical to the automatic transfer switch except the full-line voltage protection is omitted.

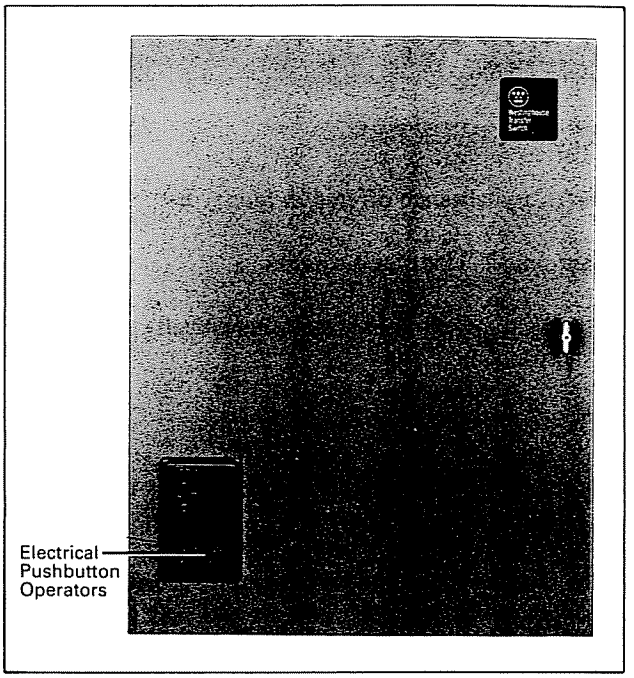

Non-Automatic Transfer Switch

Transfer Switch Catalog Number Explanation

Type Switch	Construction	No. of Switches Poles	Ampere Rating	Voltage	Enclosure
A TS	B M	3	0225	–	K
Transfer Switch	BM – Automatic or Non-Automatic	2 – 2 Pole	0100 – 100 Amp	A – 120/60	K – Open
		3 – 3 Pole	0150 – 150 Amp	B – 208/60	S – NEMA 1
		4 – 4 Pole	0225 – 225 Amp	W – 240/60	J – NEMA 12
A – Automatic			0300 – 300 Amp	X – 480/60	R – NEMA 3R
B – Basic	DM – Dual (2)		0400 – 400 Amp	E – 600/60	L – NEMA 4
M – Manual or	Operating		0600 – 600 Amp	G – 220/50/60	D – NEMA 4X
Non-Automatic	Handles		0800 – 800 Amp	M – 230/50	
			1000 – 1000 Amp	Z – 365/50	
	SM – Single (1)			H – 380/50	
	Operating			N – 401/50	
	Handle			O – 415/50	
				K – 600/50	

TRANSFER SWITCH OPTIONS

Description

The following options are Underwriters' Laboratories, Inc. listed, except as noted, when supplied on UL Listed switches.

NOTE: If an option is selected that is NOT UL listed, the switch will NOT have a UL label.

1. Time Delay Normal to Emergency (TDNE)

Delays the transfer from normal in order to override momentary power outages/fluctuations. Timing begins when Emergency source appears. Does not affect initiation of engine start circuit. Should the Normal power source fail, the engine start contact will immediately close and, if connected to an engine generator, will initiate engine startup.

A. Adjustable 1-60 seconds.
B. Adjustable 0.1-10 minutes.
C. Adjustable 0.2-30 minutes.

2. Time Delay on Engine Starting (TDES)

This option is for use only where the Emergency source is an engine generator. It delays initiation of the engine start circuit in order to override momentary power outages or fluctuations. Does not affect ability of the switch to transfer from Normal to Emergency source.

B. Adjustable .5 to 15 seconds.
C. Adjustable 4 to 120 seconds.

3. Time Delay Emergency to Normal (TDEN)

Delays the transfer from emergency to permit stabilization of the normal power source before retransfer is made. Timing begins when the normal source appears. If the Emergency source fails during timing, transfer to Normal source is immediate, overriding the time delay.

A. Adjustable 1-60 seconds.
B. Adjustable 0.1-10 minutes.
C. Adjustable 0.2-30 minutes.

Description

4. Time Delay for Engine Cool-Off (TDEC)

Permits the generator to run under a no-load condition after transfer to Normal has been made. Timing begins when transfer is made.

A. Adjustable 1 to 60 seconds.
B. Adjustable 0.1 to 10 minutes.
C. Adjustable 0.2 to 30 minutes.
D. Fixed, non-adjustable, five (5) minutes.

5. Frequency/Voltage Relay for Emergency Source

Relay is connected to the Emergency source, constantly monitoring that phase. Prevents transfer from Normal to Emergency until the engine generator has reached its operating frequency or voltage. When switch is in the Emergency position and the Emergency source is outside the relay setting, the switch will initiate transfer to the Normal position if the Normal source is present.

A. Underfrequency, adjustable 45-60 Hz (drops out 2 Hz lower than setting).

B. Undervoltage/Underfrequency (combines 5A and 5D in single card except voltage non-adjustable).

C. Overfrequency, adjustable 50-65 Hz (drops out 2 Hz above setting).

D. Undervoltage, adjustable (nominally set at 90% pickup, 70% dropout). Single phase sensing only.

E. Overvoltage, adjustable (nominally set at 105% pickup, 115% dropout). Single phase sensing only.

F. Undervoltage, 3 phase, otherwise same as 5D.

G. Overvoltage, 3 phase, otherwise same as 5E.

6. Test Pushbutton

Provides test operation of the transfer switch by simulating a loss of normal power. Engine starting will be initiated and transfer to Emergency source will occur. When selected, the standard two-position Auto/Test switch is omitted.

Momentary Contact (Pushbutton) (TPB)

B. In cover of enclosed switches.

7. Four-Position Selector Switch

Permits four modes of switch operation: "TEST", "AUTO", "OFF", and "ENGINE START". The "OFF" position de-energizes the control relays, opens the engine start circuit, and opens the motor circuit for maintenance or manual operation. The switch will not operate nor will the engine start on power failure. A white light is also furnished that lights only when the switch is in the "OFF" position.

The "TEST" position simulates power failure. Engine starting is initiated and the switch will transfer when emergency voltage appears. The "AUTO" position returns the transfer switch to Normal operation. The "ENGINE START" position retains the transfer switch at normal and initiates the engine start circuit. The switch will not transfer unless the normal source fails.

D. In cover of enclosed switch. When selected, standard two-position Auto/Test switch is omitted.

8. Bypass Pushbutton

Provides a bypass on the TDNE (Option 1) or TDEN (Option 3) relay, permitting switch to be transferred to Normal or Emergency source without time delay. Option is normally used in testing when it is not desirable to wait for the timers to finish their timing sequence.

C. Bypass TDEN (PBEN) in enclosure cover.
D. Bypass TDNE (PBNE) in enclosure cover.

9. Selector Switch Maintenance

Disconnects power to the transfer motor. Marked "OFF/AUTO". Subsequent manual operation of the transfer switch isolates the transfer switch load circuit from either source.

B. In cover of enclosed switches. (2-Pos. Sel. Switch)

Description

10. Preferred Source Selector Switch

For use when Normal and Emergency Source are both commercial power, or when the Normal Source is commercial power and the Emergency Source is engine generator. Option permits selection of either source as the preferred source to which the switch will always transfer, if that source is available. Marked Source 1/Source 2.

B. In cover of enclosed switch.

For use when Normal and Emergency Source are engine generators. Two engine start contacts are provided marked Source 1/Source 2.

D. In cover of enclosed switch.

11. Automatic Circuit Breaker Reset

This option provides means of resetting tripped thermal magnetic breakers when used in the transfer switch. Manual reset can be accomplished via the transfer switch manual operator.

D. Normal Breaker Reset PB in cover of Enclosed Switch.

E. Emerg. Breaker Reset PB in cover of Enclosed Switch.

F. Circuit Breaker Lockout: Prevents transfer if breaker trips (supplied as standard with Options 16/17/37).

12. Pilot Lights

Pilot lights can be furnished to indicate (1) switch position; (2) source condition; and, (3) tripped condition.

Switch Position: Utilizes a 1A breaker auxiliary contact.

C. Normal Supply (green) in cover of enclosed switch.

D. Emergency Supply (red) in cover of enclosed switch.

Source Condition: Indicates whether or not source voltage is present.

G. Normal Supply (white) in cover of enclosed switch.

H. Emergency Supply (white) in enclosure cover.

Tripped Condition: Available only with thermal-magnetic breakers, Option 16, 17, or 37.

Description

L. Normal Supply (amber) in enclosure cover.

M. Emergency Supply (amber) in enclosure cover.

14. Relay Auxiliary Contact

The Normal source relay is energized only when the switch is in the Normal position and Normal power is present. The Emergency source relay is energized whenever the Emergency source is present.

C. Normal Source: Provides 2 NO and 2 NC contacts.

D. Emergency Source: Provides 2 NO and 2 NC.

16. Thermal Magnetic Breakers in Place of Standard High Withstand Molded Case Switches

Use of this option can, in many cases, eliminate the need for separate upstream overcurrent/short circuit protection, thus enabling code requirements to be met with a device that takes up less space and requires less wiring. Either the Normal or Emergency breaker, or both, may be replaced. Four pole switches have trip units only in three poles. Includes Option 11F

A. Thermal Magnetic.

D. SELTRONIC™ Circuit Breakers.

E. Thermal magnetic breaker, Emergency source only.

F. Thermal magnetic breaker, Normal source only.

17. High With Current Breakers in Place of Standard High Withstand Molded Case Switches (Includes Option 11F)

A. Thermal Magnetic Series C or MARK 75 Breakers.

B. SELTRONIC MARK 75 Circuit Breakers.

Description

18. Metering

E. Voltmeter mounted in cover (includes selector switch). Voltmeter is of direct reading type.

F. Ammeter mounted in cover (includes current transformers and selector switch).

G. Frequency Meter.

H. Running Time Meter.

19. Solid Neutral Bar Assembly

Provides insulated and groundable panel mounted neutral bar. Connections for Normal, Emergency and load. Shipped loose with open switches, mounted on enclosed switches. Neutral bar supplied as standard on automatic and non-automatic switches 2 and 3 pole.

20. Non-Standard Connections

Front connected solderless lugs are furnished on all enclosed units and on open units as standard.

A. Rear Bus Connections:

150-1000 Amperes – Non-Standard

21. Non-Standard Terminals (Refer to Westinghouse)

Description

23. Plant Exerciser

Digital 7 day timer provides for automatic test operation of the plant for pre-selected intervals at least once a week, mounted on intelligence circuit. A 60 or 50 Hz unit is used depending upon frequency.

C. Without interrupting normal supply.
D. By simulation of power failure.
G. With a selector switch for choosing 23C or 23D.
I. Same as D except with fail-safe return to Normal should Emergency fail during exercise period.
J. Same as G except with fail-safe return to Normal should Emergency fail during exercise period.

24. Battery Charger

The trickle charge Dc output is 12 or 24 volts. Units are supplied in separate wall mounted enclosure. Automatic high-low charge rate.

C. 12 volt
D. 24 volt
E. 32 volt

26. Type of Protection (Normal Source)

Complete protection is standard. A voltage sensing relay monitors each phase of the Normal power supply. Normally set at 70% dropout and 90% pickup.

C. Overvoltage Sensing Relay-adjustable, nominally set at 105% pickup and 115% dropout (normally used with Option 26A).

D. Area protection connections with override circuit. Provides two terminal blocks for connection of one or more NO (open when there is no voltage) area protection contacts; these terminal blocks are wired in the same manner as the test switch and when the NO area protection contact opens, the switch will initiate engine start and will transfer to Emergency. In the event that the NO area protection contact remains open and the Emergency source fails when the switch is in the Emergency position, an override circuit will retransfer the switch to the Normal source if it is available.

E. Underfrequency, adjustable 45-60 Hz (drops out 2 Hz lower than setting). A frequency sensing relay is connected to 1 phase only of the Normal source, constantly monitoring that phase.

Description

F. Overfrequency, adjustable 50-65 Hz (drops out 2 Hz above setting). A frequency sensing relay is connected to 1 phase only of the Normal source, constantly monitoring that phase.

27. Non-Standard Voltages and Frequencies

A. Non-standard AC voltages and frequencies.

Three and four pole breaker type switches are suitable for use on 208, 220, 240, 380, 415, 480 and 600 volts, 50/60 Hz without modification through the use of multi-tap transformers. VSR adjustment capability make switches suitable for use on 230, 365 and 401 volt, 60/50 Hz systems (when used on these voltages, the dropout voltage is set at 75% instead of 70%).

28. Intelligence Circuit Fuses

A. Provides fuses on all non-essential control circuitry.

29. Type of Operation

Automatic operation is standard. Provides for automatic transfer and retransfer from source-to-source as dictated by the reset values of the transfer switch intelligence circuits.

D. Pushbutton operation only. Includes two pushbuttons (marked NMPB and EMPB) for operating the transfer switch from Normal to Emergency and from Emergency to Normal. No automatic operation is included. Note: This option is standard on non-automatic units (catalog numbers MTSBM).

E. Pushbutton return to Normal. Automatic operation Normal to Emergency, pushbutton operation Emergency to Normal.

①G. Automatic/Manual operation. Two position selector switch (marked Auto/Manual) permits selection of automatic or manual operation. Includes Option 29D which is functional only when selector switch is in the manual position.

J. Automatic/Manual pushbutton return to Normal. Two position selector switch (marked Auto/Manual) permits selection of automatic or manual pushbutton return to Normal. Includes Option 29E which is functional only when selector switch is in the manual position.

① Not UL Listed.

Description

30. Cranking Limiter

A. Adjustable 20-200 seconds. Interrupts motor start circuit if voltage does not appear within pre-selected time.

31. Audible Alarm with Silencing Switch

Sounds alarm when switch is in the Emergency position and Emergency voltage is present.

B. Enclosure mounted.

32. Delayed Transition Timer

Provides a time delay in the Neutral (both off) position when the load is transferred in either direction to prevent excessive inrush currents due to out-of-phase switching of large motor loads. Utilizes a 1A Breaker auxiliary contact.

A. Adjustable .5 to 50 seconds.

33. Shunt Trip

Wired to terminal blocks for customer connection. (120V coil supplied as standard.)

A. Supplied in Normal Breaker.

B. Supplied in Emergency Breaker.

34. Extender Cable

Provides a means for extending the distance between the power switching panel and the intelligence panel. This allows for remote mounting of the intelligence panel.

A. 42 inch.
B. 72 inch.
C. 96 inch.
D. 120 inch.
E. 144 inch.

Special lengths are available. Contact Westinghouse.

35. Pretransfer Signal Device

A. Provides contacts for interface with other equipment (typically elevator controls) prior to transfer in either direction.

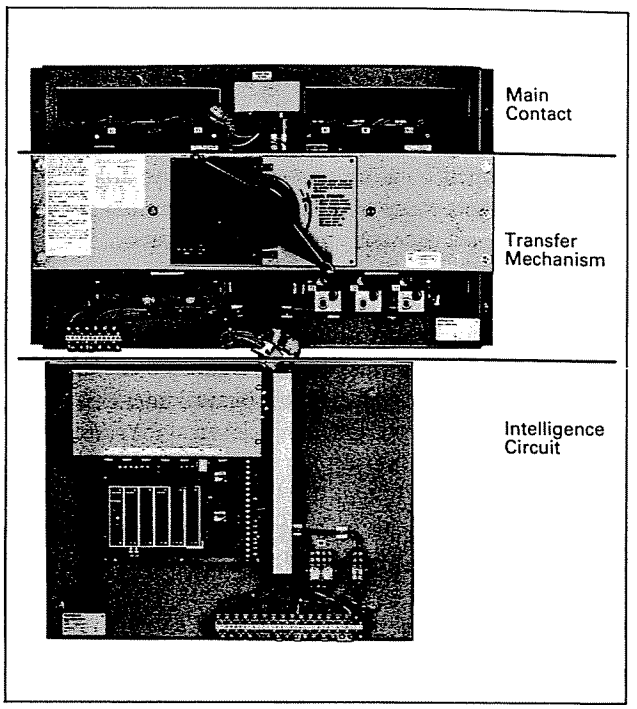

Transfer Mechanism

37. Service Entrance

A. Provides transfer switch as suitable for service equipment rating. A key operated selector switch permits external, power operated service disconnection with external pilot light for disconnect indication, also includes Option 16 or 17.

B. Same as A except, includes ground fault protection.

MAIN CONTACT, INTELLIGENCE AND TRANSFER SYSTEMS

The automatic transfer panel consists of three main elements: the main contacts, the intelligence circuit, and the transfer mechanism as shown. Components comprising these systems are installed in accordance with the specific requirements of the circuit being controlled. Each panel is therefore tailor-made for a specific control function. Following is a description of the principal components of the main contact, intelligence and transfer mechanism.

1. High withstand, molded case switches are the main contacts for the Normal and Emergency power sources in standard, unmodified switches (Option 16 or 17 are not selected). These continuous duty switches are rated for all classes of loads, open or enclosed; they have high dielec-

tric strength, heavy-duty switching and withstand capabilities, and high interrupting capacity. They incorporate positive, quick-make, quick-break toggle mechanisms and De-ion® arc quenchers.

2. The intelligence circuit consists of timing and voltage sensing elements connected to the power sources and provides the signals necessary for switch operation.

3. The transfer mechanism transfers between power sources through a motor-driven gear train that operates cams to open and close the normal and emergency switches. The mechanism provides a positive mechanical interlock which prevents both switches from being closed at the same time.

TROUBLESHOOTING

The Transfer Switch is energized; proceed with care!

A. Gen-Set Does Not Start When Test Switch is Operated

1. *Check Operation.* Make sure switch is held in "Test" position longer than the Option 2 time delay.

2. *Check Engine Controls.* Make sure control is in "Automatic" position. Make sure batteries are charged and connected. Make sure engine start circuit is wired.

3. *Check Wiring.* Make sure the start signal wires from the engine controls are connected to the correct terminals on the Control Panel. See the Schematic/Wiring Diagram.

4. *Check Signal Circuit.* Disconnect and tape start signal wires. Connect ohmmeter between terminals 51 and 52. Reading should indicate an open circuit. Depress and hold Test Switch. After Option 2 times out, ohmmeter should indicate a closed circuit.

B. Transfer Switch Does Not Retransfer the Load After Normal Source is Returned or After Test Switch is Released

1. *Check Operation.* Make sure time has passed to allow for Accessory 3 time delay.

2. *Check Normal Source Voltage Levels.* On a three phase system voltmeter should read phase-to-phase voltage. LED on Normal Source monitoring card should be on.

3. *Check Signal Circuit.* Confirm that the Test Switch has closed by checking continuity between terminals 60 and 61.

C. With Gen-Set Running, Transfer Switch Does Not Transfer the Load to Emergency

1. *Check Operation.* Make sure time has passed to allow for Option 1 time delay.

2. *Check Engine Contols.* Check generator output frequency and voltage. Output should be at least 90% of nominal voltage and 95% of nominal frequency. Make sure generator output circuit breaker is closed. LED's on emergency source monitoring cards should be on.

3. *Check Wiring.* Voltmeter should read phase-to-phase voltage between Transfer Switch terminals E1 and E2.

D. Transfer Switch Retransfers the Load, but Gen-Set Continues to Run

1. *Check Operation.* Make sure time has passed to allow for Option 4 time delay.

2. *Check Engine Controls.* Make sure engine starting control is in the "Automatic" position.

3. *Check Signal Circuit.* Disconnect and tap wires to terminals 51 and 52. Connect ohmmeter between these terminals; reading should indicate an open circuit.

If the problem is isolated to the transfer mechanism, main contacts or signal circuits on the Control Panel or the Transfer Switch, call your local Authorized Representative for further assistance.

OPERATION OF THE TRANSFER MECHANISM

The operating principle of all transfer switches is the same. However, switches rated 100 amperes employ a different mechanical system for the switching operation than the gear-train system used in 150 to 1000 ampere units. The transfer mechanism of the 100 ampere unit, Fig. 1, consists of a pivoting rocker-arm lever which operates the circuit breaker handles as the arm is moved by a rotating lever connected to the transfer motor. A slide pin engaging a pivot in the rotating lever converts rotary motion to linear motion. Motor limit switches for these units are mounted external to the molded case switches and operated by the rotating lever. Each limit switch is synchronized with its associated switch to operate when its switch closes.

The transfer mechanism of 150 to 1000 ampere units, Figs. 2 and 3, consist of a unidirectional gear motor, one drive gear, two spur gears and cams assembled in a housing located directly in front of the circuit breakers. The handles

of the switches fit into the two cams located on both sides of the central drive gear. In operation, after the emergency power source appears and the voltage supplied by that source is sufficient, the ER relay closes. This closure completes the circuit to the transfer motor. The motor turns the central drive gear, opening the normal switch and closing the emergency switch. The closing of the emergency switch opens an auxiliary contact that cuts off power to the transfer motor, and a built-in solenoid brake provides positive stopping of the motor as soon as power to it is cut off. When normal power returns, the NR relay completes the circuit that opens the emergency and closes the normal switch. On closing, the normal switch operates a contact that stops the motion of the transfer motor.

The drive for the transfer mechanism is provided by a center spur gear powered by a unidirectional motor. The center gear drives two outer spur gears, each of which have a steel shoulder screw and nylon roller positioned to engage a groove in a nylon cam and thus operates both molded case switches. The nylon rollers are mounted eccentrically on each of the outer spur gears, which drives its associated cam. The cams travel vertically on guide rods attached to the mechanism's housing. (See Fig. 3.)

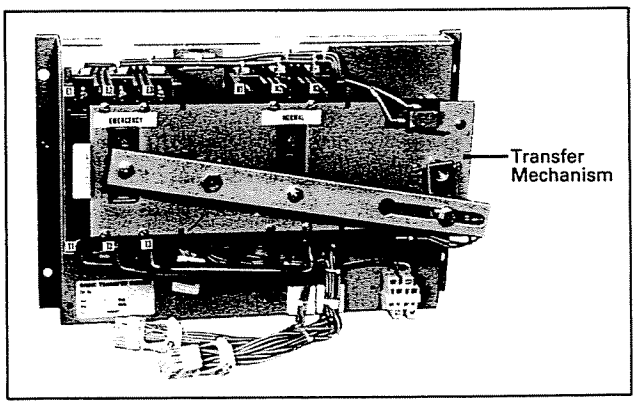

Fig. 1 *100 Amp Power Panel*

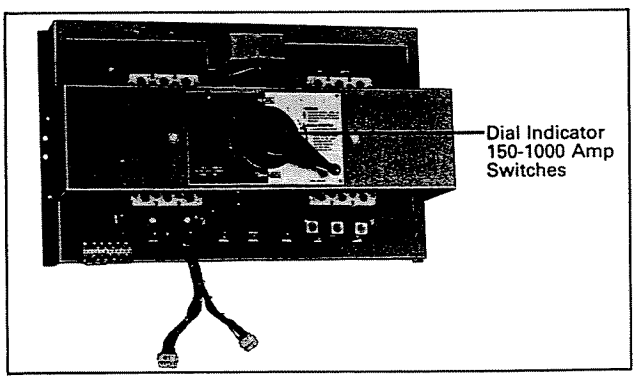

Fig. 2

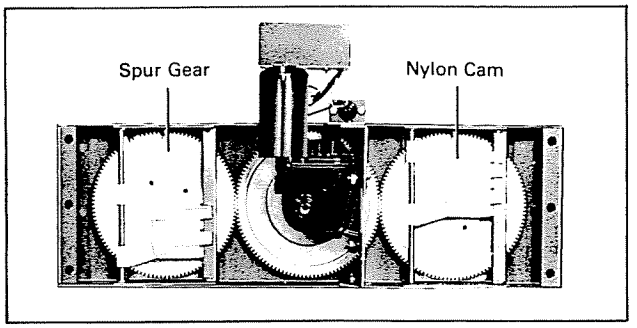

Fig. 3 *Transfer Mechanism 150-1000 Amp*

NOTE: On transfer switches 150-1000 amp and larger, a dial on the mechanism front indicates which position the switch is in. The handle free-wheels, thus does not indicate switch position.

All transfer mechanisms employ a mechanical interlock to prevent both breakers from being closed at the same time. This feature keeps the molded case switches trip-free in the closed position and thereby permits thermal and short circuit protection to be incorporated in either or both interrupters. If thermal and magnetic trips are required, the interrupter is supplied with a built-in contact which opens only when the interrupter trips on overload or short circuit. This prevents further electrical automatic operation of the switch until the fault is cleared and the interrupter reset.

The power for all transfer mechanisms is taken from the side to which the load is being transferred. The normal power source is the preferred source and the switch will always seek this source when it is available.

This design permits:

(a) Two Electrically Operated Positions;

(1) Normal switch closed – emergency switch open.

(2) Normal switch open – emergency switch closed.

A neutral position (i.e., both switches off together) is not possible if any power source is available. Unless Option 32A is selected.

(b) Three Manually Operated Positions;

(1) Normal switch closed – emergency switch open.

(2) Normal switch open – emergency switch closed.

(3) Both switches open (this position is only possible when the transfer motor is disconnected).

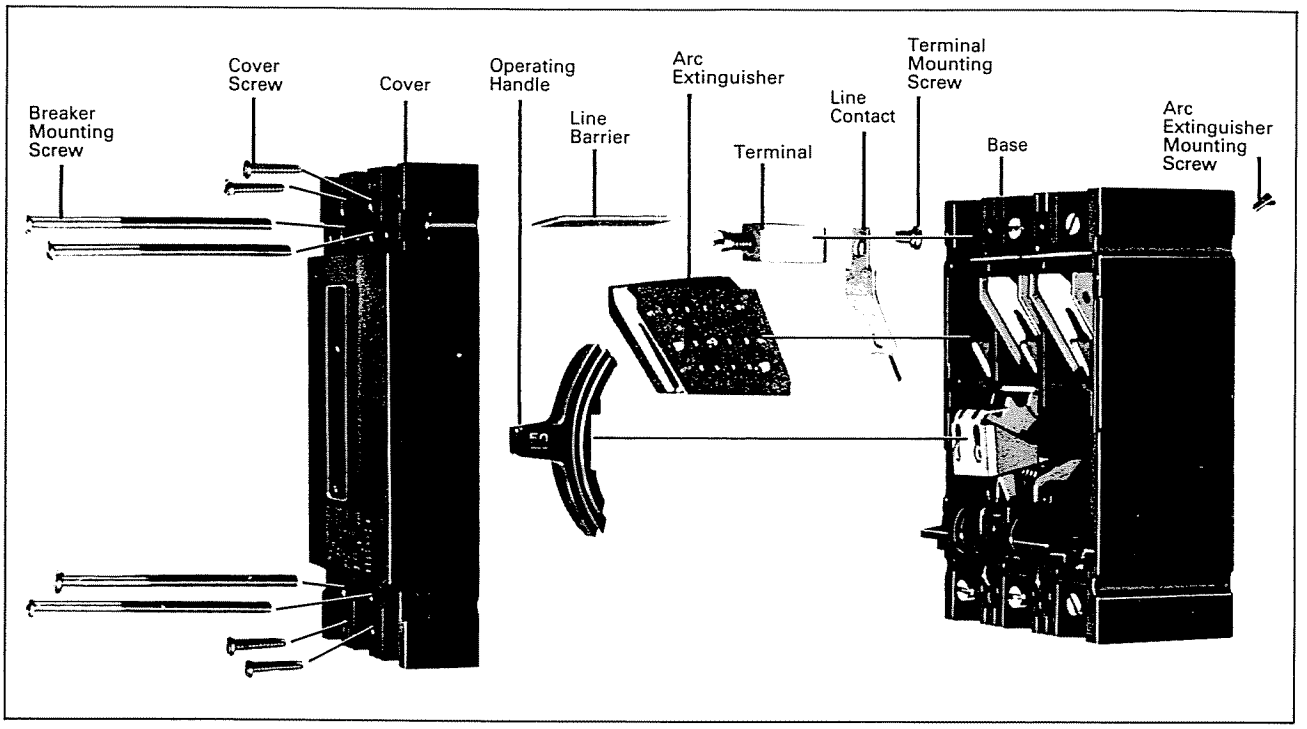

Manual Operation

Should manual operation be required, first isolate the transfer motor circuit by unplugging the disconnect link. Any attempt to operate the manual handle without first isolating the transfer motor circuit will cause an automatic transfer cycle to the preferred power supply, if available.

100-Ampere Switches

To operate manually and to disconnect the motor circuit, unscrew the rotating lever slide pin in the rocker arm lever and remove. Pivot the rocker arm lever until the desired position is achieved. No special tools are required. The rocker arm lever nameplate indicates switch position.

NOTE: The slide pin is a left-hand thread. Remove by unscrewing clockwise.

150-1000 Ampere Switches

Rotate the black handle in a counterclockwise direction until the desired position is reached. The nameplate has an indicator or flag that shows switch position. The handle free-wheels in the clockwise direction so that if electrical operation occurs the handle will not rotate.

To disconnect motor circuit:

Unplug the motor disconnect plug located to the transfer motor. Or, if the unit is supplied with 4 position selector switch (opt. 7D), it should be turned to the "OFF" position (in these cases it is not necessary to unplug the disconnect link). Any attempt to operate the handle without first isolating the transfer motor causes an automatic transfer cycle.

Please refer to the factory (800-354-2070) for a tabulation of replaceable items. **Transfer mechanism parts and circuit breakers replaced by other than an authorized Westinghouse representative is not recommended.**

MAINTENANCE

The transfer switch is maintenance free under normal usage. Local conditions, however, may make it necessary to periodically blow dust and dirt from the relays and timers, and to see that grease or oil do not accumulate on the switch components.

Follow the recommendations of the generator set manufacturer as to testing frequency. Use test switch to check the electrical operation of the switch. **Always return the switch to the Auto position when the test is completed.**

The enclosure door should only be opened by a competent electrician familiar with the transfer switch.

Good maintenance procedure calls for periodic inspection of all electrical apparatus including molded case switches. Terminal lugs and trip units must be tight to prevent overheating. Due to the inherent wiping action

built into the moving contacts of all circuit breakers, operating the switch several times under load will remove any high resistance film that may have formed.

Under normal conditions, additional cleaning of contacts is not required. However, should operating and/or atmospheric conditions make it desirable to clear the contacts further, the following procedure is recommended:

1. Remove cover, arc extinguisher hold down screws, arc extinguishers, and line terminal assemblies.

2. Wipe contact surfaces with a clean cloth dipped in carbon tetrachloride or other chlorinated solvent. If surfaces are excessively oxidized or corroded, scrape lightly with a fine file before wiping.

The manual operating handle is fit to its bushing with a **left hand** thread. Should it ever become necessary to dismantle this mechanism, it is essential on re-assembly that the cam-operating rollers on the outer gears be positioned precisely by meshing the outer gears in the correct relationship to the drive gear. Lines are scribed on both the drive and outer gears to facilitate alignment. (See Fig. 3.) In refitting the transfer assembly back into position, the right and left circuit breaker handles must fit into position between the rollers operated by the cams and outer gears.

The intelligence circuit can be electrically isolated by disconnecting plugs P1 and P2. Be sure to place the engine controls in the OFF position first to avoid an inadvertent engine start.

The switch can be manually operated by either removing the disconnect plug (P4) or plugs P1 and P2.

CAUTION

The mechanism and molded case switches should not be serviced by other than an authorized factory representative.

SEQUENCE OF OPERATION

Under normal conditions, the right hand or normal switch is closed and the left hand or emergency switch is open. The 3 phase voltage sensing card (UV) and the normal control (NR) relay are energized. Should the normal power fail, the (UV) card drops out, and in so doing provides a signal to start the engine generator. When the generator provides sufficient voltage, the ER relay closes and completes the circuit to the transfer mechanism. This action opens the normal switch and closes the emergency switch. The closing of the emergency switch opens the auxiliary (ELS) contact which stops power to the motor operating the transfer mechanism. Positive stopping of the motor is achieved by a solenoid brake.

When normal power returns and the voltage reaches the UV card's pickup point, the NR relay closes initiating engine generator shutdown. The closing of the NR relay completes the circuit to the transfer mechanism, opens the emergency switch, and closes the normal switch. Once the normal switch is closed, an auxiliary (NLS) contact inside the switch cuts off power to the transfer mechanism motor and normal conditions within the switch are fully restored.

Transformers NT1 and ET1 are multi-tap units with primaries for 600, 480, 240, 208, 230, 380 or 401/416 volt connections. The NT1 transformer is connected to one phase of the normal supply and the ET1 transformer is connected to one phase of the emergency supply. NT1, ET1 tranformers have two electrically separate windings, each with 120 volt output. The smaller winding (25VA) supplies power to the solid-state control and the larger secondary supplies power to the transfer motor and solenoid brake circuit.

Intelligence Circuit

The intelligence circuit is mounted on the lower panel and is connected to the switching panel (upper) by means of a cable terminating in two plugs, keyed to prevent improper insertion. An extender cable is offered if it is desired to mount the intelligence circuit a greater distance away from the switching panel than the standard cable allows; or, if an even greater distance is desired, male and female plugs are offered to allow customers to fabricate cables to their specific requirements. The intelligence panel can be mounted in any position.

Intelligence panels come in one size regardless of the type of switch and the number of options. The panel is drilled and tapped for the maximum number of options that can be installed on it.

All intelligence panels have two power transformers (one for normal, one for emergency source) and one logic transformer package (for monitoring both sources).

A solid-state logic package consisting of six or nine plug-in printed circuit cards is also mounted on the panel. A plug-in relay is used for outputting from the logic package.

Options 1, 3, 4, 5, 26 are performed by printed circuit cards. Four timing cards (1-60 sec., 0.1-10 minutes,

0.2-30 minutes, and 5 minutes fixed) are used interchangeable in Options 1, 3, 4; cards for undervoltage, overvoltage, underfrequency and overfrequency are used interchangeable in Options 5 and 26. Options 2, 23, 30, 32, and 35 are performed by panel mounted timers.

NOTE: When Option 4 is selected, upon initial energization of the transfer switch, an Engine Start will be called for until the time setting has elapsed. To avoid this, put the Engine Start panel in the "OFF" position for this period of time. This will only occur on the initial energization.

Each plug-in card has adjustment knobs that can be screwdriver or finger adjusted. In addition, each card has a captive, screwdriver lock that positively locks the adjustment setting by providing an even, uniform force that does not alter the setting when it is tightened. Voltage cards and frequency cards are interchangeable, as are timing cards; however, a timing card cannot be used in a voltage/frequency slot, or vice versa, since they are key interlocked to prevent improper insertion. Each card is held in place by two captive screws. Empty card slots are covered by blank covers.

Each logic package is divided into sections for Normal source and Emergency source. Each source is further subdivided into sections for Voltage/Frequency and Timing. The standard catalog numbered switch without options has two driver cards (one in the Normal and one in the Emergency timing slot) which are required for operation. If timing options are selected, the drivers are omitted since either a driver or a timer is required on both the Normal and Emergency sources for operation.

A Light Emitting Diode (LED) is supplied on each sensing or time delay card. The light appears on the sensing card (voltage or frequency) when the monitored voltage or frequency is within the preset limits. The light appears on the time delay cards after the preset time has elapsed. In other words when the card has "picked-up" the light is on.

Voltage signals from the logic packages terminals 1 thru 7 provide normal source voltage to the undervoltage card (UV). If this voltage is within the cards dial settings it will then signal the TDEN relay to begin timing. Upon completion of its time delay as set on the dial it will then energize the Normal relay (NR) and the TDEC card. Upon completion of its time delay the TDEC will drop out the EC relay and open the engine start circuit shutting down the engine.

Correspondingly, terminals 8 thru 10 monitor one phase of the emergency source. Proper input to the UF card will cause it to energize the relay driver card and this card will energize the ER relay.

The normal and emergency relays (NR and ER) can be energized simultaneously.

Also should a source of power disappear the switch will automatically override any option 1 or 3 time delay functions and, if necessary, immediately transfer to the available source.

STORAGE

If the transfer switch is to be stored prior to installation, it should be ordered with packaging/crating suitable for the storage environment both mechanically and environmentally. This is equipment not designed or packaged for outdoor storage and warranty will be withdrawn upon evidence of extended outdoor storage. It is strongly suggested that this equipment be stored in a climate controlled environment between the limits of −20°C to 85°C with a relative humidity of 80% or less.

ADJUSTMENTS

All Automatic Transfer Switches are furnished with an adjustable line voltage plug and receptacles. To change line voltage, remove the covers and insert the plug in the desired receptacle (see illustration). Replace the covers.

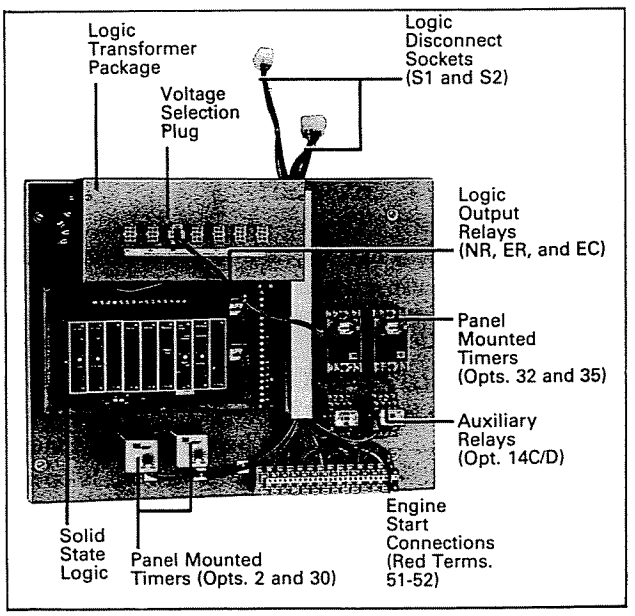

Solid-State Intelligence Panel

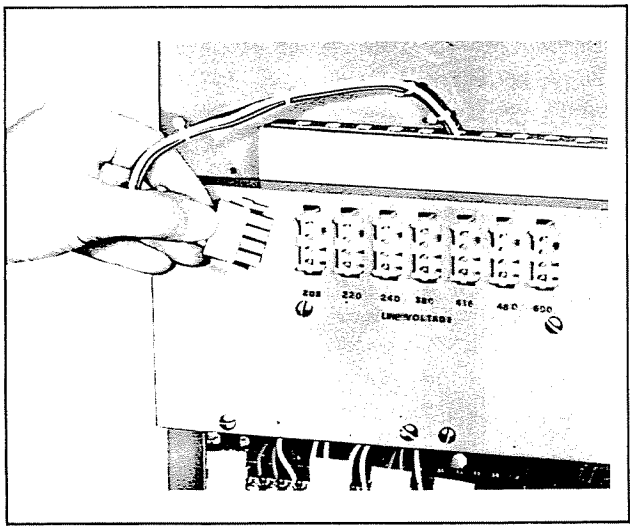

Line Voltage Plug and Receptacles

CAUTION

Be sure the plug is inserted in the receptacle corresponding to the system voltage. Improper connection can cause damage.

OPTION ACCESSORY ADJUSTMENTS

Devices such as voltage sensing relays, timers, etc. furnished with transfer switches will be similar to one of the following types of devices and adjustments should be made as shown for that type of device.

Solid-State Logic Cards

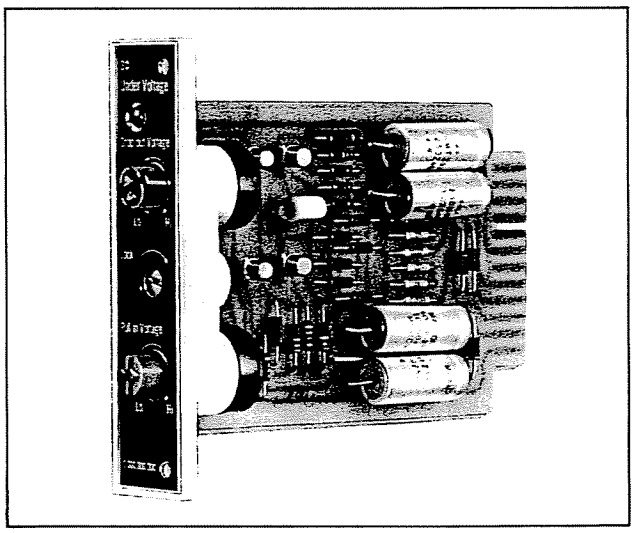

Undervoltage Card – Used on Option 5D and Standard for Normal Side Sensing

NOTE: Adjustments to sensing cards (voltage and frequency) require a variable source of control power. DO NOT ATTEMPT to adjust these cards without such variable control power. Westinghouse offers a compact, field test kit S/N 1278C67G01 for accurate field adjustments of sensing cards. Refer to the factory for availability.

Step	Description
1	Set Drop-out knob maximum Counterclockwise
2	Set Pick-up knob maximum Counterclockwise
3	Increase line volts to desired Drop-out value (normally 70%) LED should be "ON"
4	Rotate Drop-out Clockwise until LED goes "OFF"
5	Rotate Pick-up to maximum Clockwise LED is "OFF"
6	Increase line volts to desired Pick-up value (normally 90%) LED is "OFF"
7	Rotate Pick-up knob Counterclockwise until LED comes "ON"
8	Recheck Pick-up and Drop-out by running voltage up and down check by LED indication

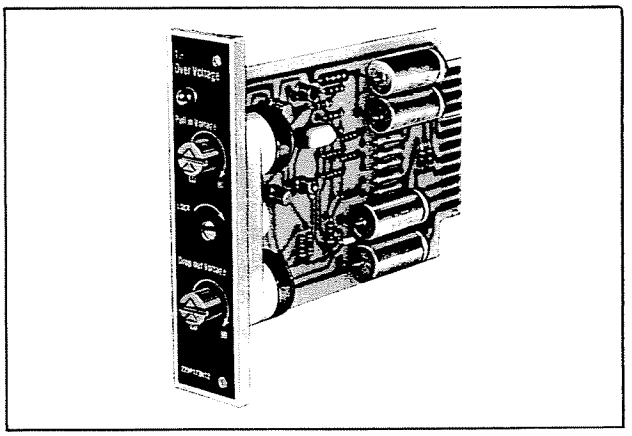

Overvoltage Card – Used on Options 5E, 26C

Step	Description
1	Set Drop-out to maximum Counterclockwise
2	Set Pick-up to maximum Counterclockwise
3	Set line voltage to pull-in value desired (normally 105%) LED is "OFF"
4	Rotate Pick-up Clockwise until LED comes "ON"
5	Rotate Drop-out maximum Clockwise
6	Set line voltage to Drop-out value desired (normally 115%)
7	Rotate Drop-out Counterclockwise until LED is "OFF"
8	Drop line voltage to pull-in desired value. LED should come "ON"
9	Increase line voltage to desired Drop-out value. LED should go "OFF"

Time Delay Cards

Used on Options 1A, 1B, 1C, 3A, 3B, 3C, 4A, 4B, 4C, 4D

Four cards are available; they are interchangeable and can be used in any timing slot.

1 – 1-60 sec.
2 – 3 sec.-10 min.
3 – 10 sec. to 30 min.
4 – 5 min. fixed

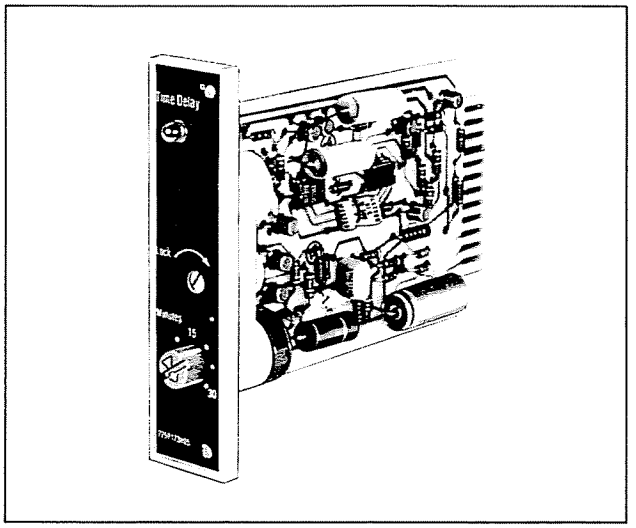

Time Delay Card

Frequency Sensing Cards

Used on Options 5A, 5C

Both under and overfrequency cards are factory calibrated at 60 Hz. The actual values of pick-up and drop-out are as follows:

Type	Dial Setting Hz	Pick-up Hz	Drop-out Hz
Underfrequency	60	57	55
Underfrequency	50	47	45
Overfrequency	60	63	65
Overfrequency	50	53	55

The adjustment dial is continuously variable between its limits.

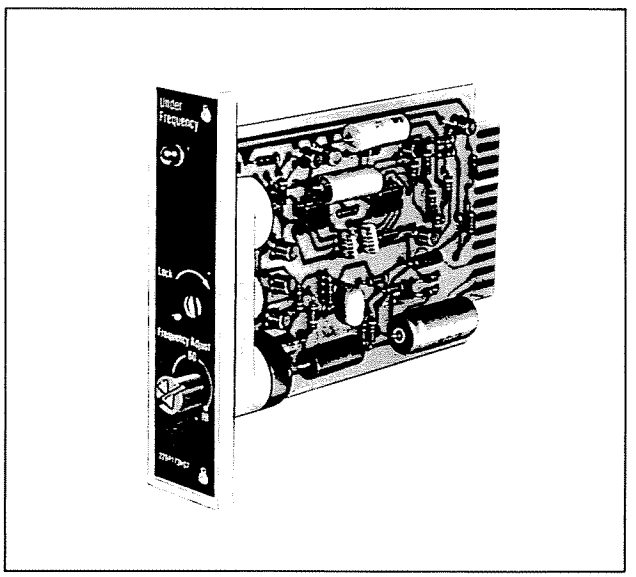

Underfrequency Card

All Cards Mechanically Interlocked

All cards are interlocked mechanically to prevent insertion into the wrong function slot. All cards have a repeat accuracy over a 20 to +60°C temperature change of ±3%. Dial settings are ±10% of indication.

After making adjustments, tighten locking screw to secure setting. Tighten mounting screws (screws are not captive).

Portable Test Kit

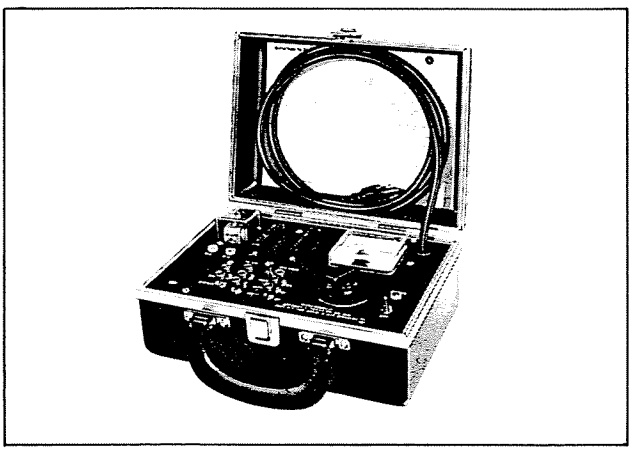

Portable Test Kit

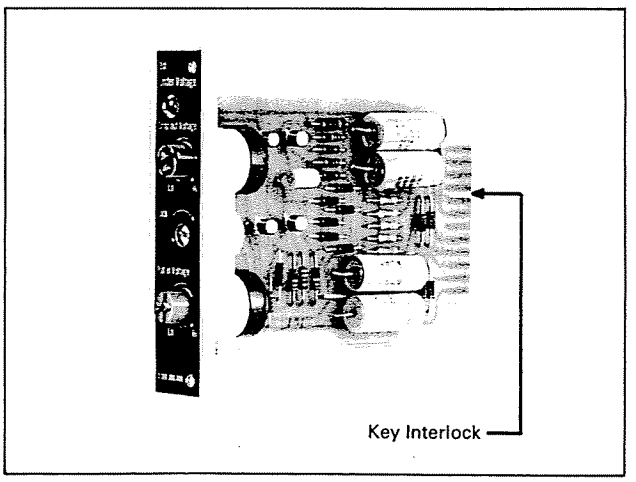

An inexpensive, portable test kit, S#1278C67G01, is available for convenient field testing and calibration of all plug-in cards and output relays. The only power source required is a 120V convenience outlet. A selector switch allows the operator to test individual cards or to simulate ATS operation by having the source monitoring cards drive the time delay cards which in turn drive the output relays, exactly as in actual use. Calibration checks or changes can thus be accomplished without the necessity of energizing the alternate power source.

Off Delay Timing Relay

Off Delay Used on Options 2, 30 (SCER)

When the relay coil is energized, the relay contacts pick up immediately. Upon deenergization, a time delay will occur before the relay contacts drop out. The time delay is adjustable by rotating the dial.

Panel Mounted Timing Relays

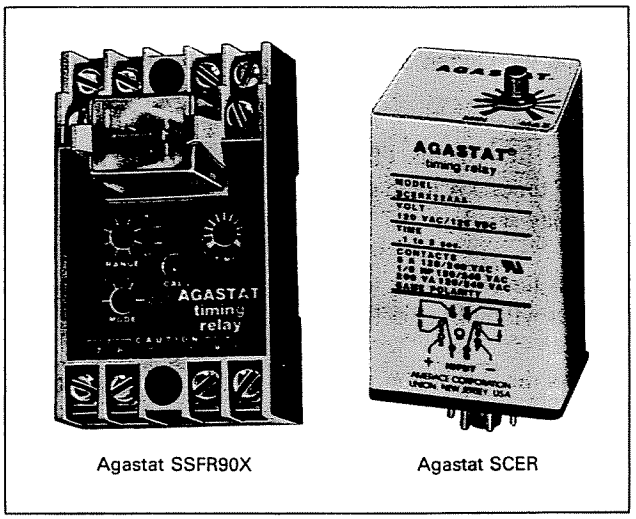

Agastat SSFR90X Agastat SCER

Panel Mounted Timing Relays

On Delay Used on Options 32, 35 (SSFR90X)

When the relay coil is energized, a time delay will occur before the relay contacts pick-up. Upon de-energization, the contacts drop-out immediately. The time delay is adjustable by setting both the range and time dials. See separate instructions for setting timer included with wiring information.

NOTE: This is a universal timer which must always be set in the ON DELAY mode for proper operation.

Plant Exerciser Timer

Plant Exerciser used in Option 23. This is a seven-day timer switch used to exercise the engine-driven generator.

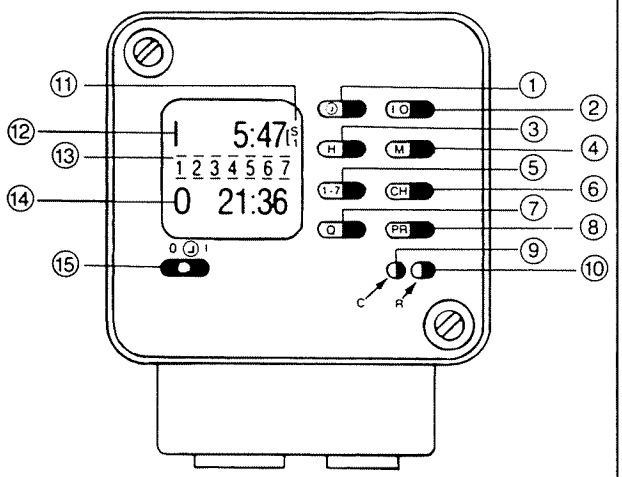

(1) Clock Mode — For setting time and day of week

(2) I/O — For programming "ON" and "OFF" cycles
I — Programs "ON" time
O — Programs "OFF" time

(3) Hours Setting

(4) Minutes Setting

(5) Day of Week Setting

(6) Checks programs successively which have been entered into the time switch

(7) "Q" Button — Enters days of the week to be programmed

(8) Program Button

(9) Clears selected programs, during or after program is entered

(10) Reset — Resets everything in memory, including time of day and all programs

(11) Output Energized Indicator

(12) Displays "On" Time

(13) Day Indicator

(14) Displays "Off" Time

(15) Output Switch — Program mode and output override
⏲ : In Program Mode
I : Output Energized
0 : Output De-energized

Plant Exciser Timer

Setting Time of Day:

1. Push Reset Button [R] to clear all memory.
2. Press the Clock Button (⏲) the display should read 0:00.
3. Press the [H] button to set the hour of day.

NOTE: Time is set in 24 hr. (military) time.

4. Press the [M] button to set the minutes of the hour.
5. Press the [1-7] button to select the day of week. Either Sunday or Monday can be designated as Day 1.
6. Press the Program Button [PR] to enter the time. The points between the hours and minutes will begin to flash.

Programming:

A. How to Set the Turn ON Time

1. Slide the Output Selector Switch to the clock or program mode.
2. Press [I/O] Button. (This button programs the ON and OFF times.) A logic symbol "I" will appear in the top display window. "I" is the symbol for "ON".
3. Press the [H] Button to set the hour of the day the program will start or "Turn ON".
4. Press the [M] Button to set the minute of the hour the program will start.
5. Pressing the [1-7] Button advances the day marker from 1-7 and back to 1. For each and every day to be selected, press the [Q] Button when the marker is over the desired day.

B. How to Set the Turn OFF Time

1. Press the [I/O] Button. A logic symbol "O" will appear in the bottom display window. "O" is the symbol for "OFF".
2. Press the [H] Button to set the hour and the [M] Button to set the minute, the program will end or "Turn OFF".
3. Press the [1-7] Button. For each and every day to be selected, press the [Q] Button when the marker is over the desired day.

4. To enter the "complete program" (Turn ON and Turn OFF times) press the Program [PR] Button. The display will return to the present time of day.

5. Repeat for all other "complete programs".

NOTE: A maximum of 10 "complete programs" may be entered into the 1100 Series. When the memory has reached its capacity, the display will read "FULL".

6. Leave Output Switch (15) in the (⌟) program mode to activate the P.E. time sequence. The I output energized position will cause a continuous engine condition. The O output de-energized position will bypass the exercise program entirely.

Westinghouse Electric Corporation
Distribution and Control Business Unit
Electrical Components Division
London, KY 40741

Instructions for 30-1000 Amp Relay Logic, Transfer Switch

I.L. 15483-A
File 29-900

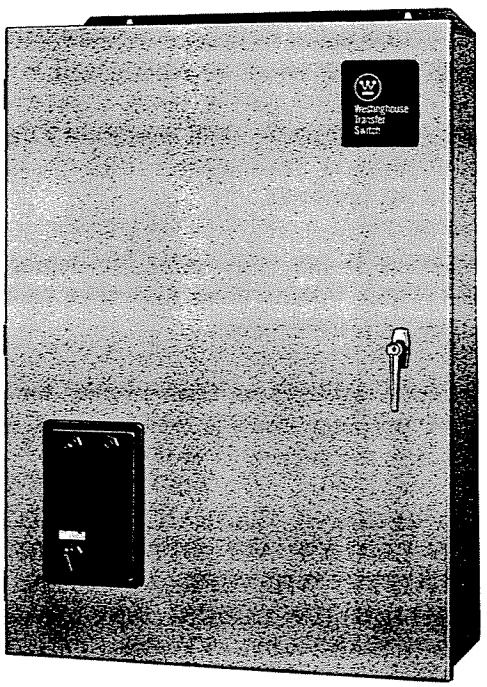

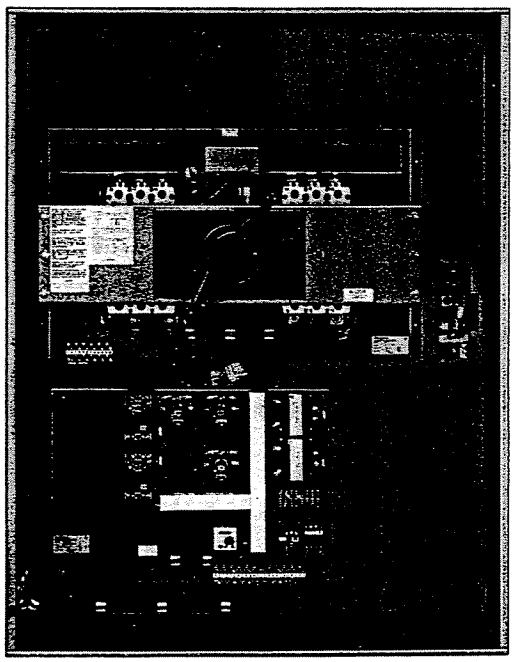

Effective July, 1990 Supersedes I.L. 15483 dated October, 1983

Katolight Service - Master Repair Manual - Page 4265

TABLE OF CONTENTS

	Page
General Information	2-3
Warranty	2
Safety Precautions	2
Introduction	3
Transfer Switch Description	3
Installation	3
Preliminary Comments	3
Storage	3
Location Selection	3-4
Switch Mounting	4
Wiring Connections	5-6
Accessory Adjustments	6-7
Plant Exercisor Timer	6-7
Battery Charger (Option 24)	7
Testing	8-9
Functional Checkout Procedure	8
Troubleshooting	9-10
Operation	10
Operation Sequence	10
Normal Source Failure	10
Normal Source Restoration	10
Manual Operation	11
Maintenance	11
Options for Relay Logic Transfer Switches	11-14

FOR MORE INFORMATION
CALL
1-800-354-2070 Outside KY
(606) 878-6100 In KY

GENERAL INFORMATION

WARRANTY

Westinghouse warrants that the product sold by it will, upon shipment, be free of defects in workmanship or material. Should any failure to conform to this warranty become apparent during a period of one year after the date of shipment, Westinghouse shall, upon prompt written notice from the purchaser, correct such non-conformity by repair or replacement F.O.B. factory, of the defective part or parts. Correction in the manner provided above shall constitute a fulfillment of all liabilities of Westinghouse with respect to the quality of the products.

Westinghouse is not responsible for damage to the product which results from improper installation, operation, or maintenance.

Westinghouse assumes no responsibility for personal injury or property damage which results while the product is in the possession of the buyer.

THE FOREGOING WARRANTY IS EXCLUSIVE AND IN LIEU OF ALL OTHER WARRANTIES OF QUALITY WHETHER WRITTEN, ORAL, OR IMPLIED (INCLUDING ANY WARRANTY OF MERCHANTABILITY OR FITNESS FOR PURPOSE).

The remedy(ies) provided above shall be purchaser's sole remedy(ies) for any failure of Westinghouse to comply with the warranty provisions, whether claims by the purchaser are based in contract or in tort (including negligence).

SAFETY PRECAUTIONS

WARNING: HAZARDOUS VOLTAGES ARE PRESENT INSIDE TRANSFER SWITCH ENCLOSURES THAT CAN CAUSE DEATH OR SEVERE PERSONAL INJURY.

FOLLOW PROPER INSTALLATION, OPERATION AND MAINTENANCE INSTRUCTIONS TO AVOID THESE HAZARDOUS VOLTAGES.

1. **The Transfer Switch should be accessible to authorized personnel only.**
2. **The power source should be disconnected before attempting service to the switch.**
3. **Remove any metallic jewelry that could contact any hazardous voltage before performing any service to the Transfer Switch.**
4. **Avoid wearing damp clothing or wet shoes when working on any electrical apparatus.**
5. **Service personnel should use rubber mats where required to avoid accidental grounding of hazardous voltages.**
6. **If any repairs are necessary, they should be made by a qualified electrician.**

INTRODUCTION

This Operations Manual is designed to guide in the installation, testing, and subsequent operation of the Westinghouse Relay Logic, Transfer Switches.

Operators should be familiar with this manual before attempting to install or operate the transfer switch.

TRANSFER SWITCH DESCRIPTION

Westinghouse Automatic Transfer Switches are reliable, safe, rugged, versatile, and compact assemblies for transferring essential loads from one power source to another in electrical distribution systems.

The intelligence/supervisory circuits on Westinghouse Transfer Switches constantly monitor the condition of both the normal and emergency power sources. These circuits automatically initiate an immediate transfer of power from the normal source to the emergency source when power fails, or voltage levels drop below a preset value. Transfer back to the normal source is automatic upon return of the normal power source.

Monitoring of the power source is always performed on the line side of the source to which the switch is connected. Power to drive the transfer switch mechanism is taken from the side to which the load is being transferred. The normal power source is the preferred source which the switch will always seek when it is available.

The Westinghouse relay logic automatic transfer switch has the following features as standard:

- Voltage sensing protection on all phases of the normal power source.
- Automatic transfer operation.
- Wiring gutter space to meet code requirements.
- Safe manual operation.
- Test selector switch (TSS) – test, auto.
- Solid neutral bar assembly.
- Engine start contact wired to red colored terminal blocks. This contact closes upon a loss of normal power, thus initiating an engine start.
- Wiring leads are clearly identified with hot ink stamped numbers.
- Common load bus.
- Two high withstand molded case switches.
- Mechanical interlocks which prevent paralleling both power sources.
- Non-ventilated NEMA 1 enclosure that utilizes heavy duty steel construction. Keylock handle provided as standard.
- Transfer switches are 100 percent equipment rated in either open or enclosed mounting arrangements.
- Continuous rating for all classes of loads.
- Auxiliary contacts – two normally open and two normally closed for both normal and emergency switch positions.
- Terminal blocks easily accessible for speedy connection to external circuits.

INSTALLATION

Preliminary Comments

Transfer Switches are factory wired and tested. Installation requires mounting of cabinet, connection of power cables, connection of engine start control wires, and wiring of options requiring field installation.

Storage

DO NOT REMOVE protective packing until ready for complete installation. Protect switch at all times from excessive moisture, construction grit, metal chips, plaster, etc.

If the transfer switch is to be stored prior to installation, it should be ordered with packaging/crating suitable for the storage environment. The ATS is not designed or packaged for outdoor storage and warranty will be withdrawn upon evidence of such storage. Westinghouse strongly suggests that this equipment be stored in a climate controlled environment between the limits of −20°C to 85°C with a relative humidity of 80% or less, non-condensing.

Location Selection

The transfer panel must be mounted on a flat, rigid supporting surface and in an atmosphere free of excessive moisture and extreme temperatures, except those units approved for special environments. The panels provide

Transfer Switch Components

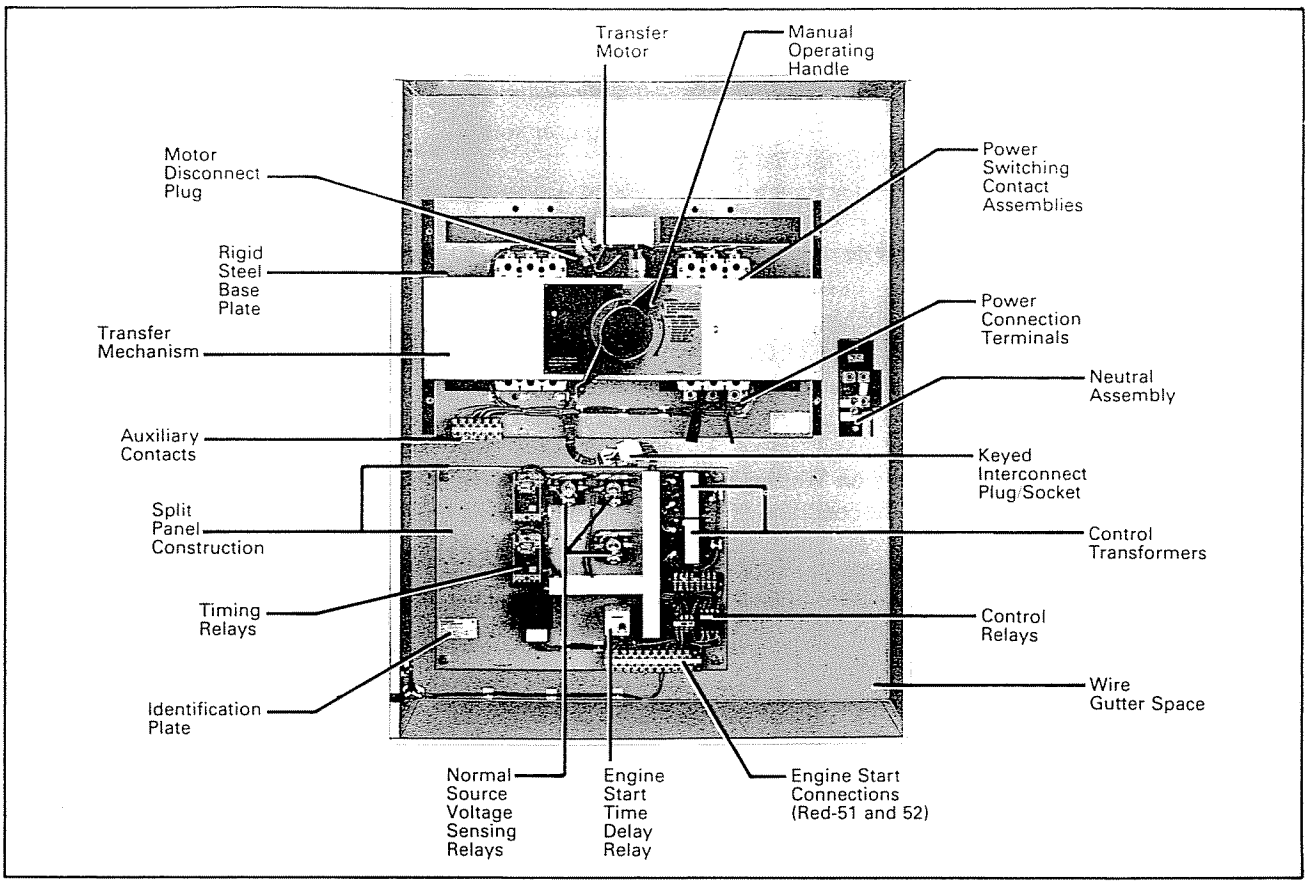

Fig. 1 *Relay Logic Automatic Transfer Switch*

ample room to permit cable entry from top, bottom or sides. At no time should cables be routed to retard the action of relays, or cover the logic in a way that restricts adjustments. Maintain proper electrical clearance between live metal parts and grounded metal.

For installation and maintenance purposes, the primary and secondary sources must have an overcurrent protective device upstream of the transfer switch, unless overcurrent protection is provided as an integral part of the switch.

Dimensions and weights of the Transfer Switch are important considerations in determining proper location selection. Refer to Table 1.

Switch Mounting

Enclosed Units

1. Carefully uncrate the transfer switch. If switch is an enclosed unit, visually check to see that cabinet has not been damaged.
2. Make a visual check to see that there are no broken or damaged components, and that there is no evidence of bent or distorted metal or loose wires as a result of rough handling. If there is visible damage, please contact your local Westinghouse sales representative or the factory at 800-354-2070.
3. A label on the baseplate gives specifications for the given transfer switch; verify that these specs comply with the job order.
4. For enclosed units, use Table 1 to layout the mounting bolt pattern.
5. Install all mounting bolt anchors and the two upper mounting bolts.
6. Gently lift cabinet and guide keyway holes onto upper mounting bolts and tighten bolts. Install lower mounting bolts and tighten. Use shims to prevent deformation of cabinet when wall is distorted.
7. Remove any tied-down accessories, cardboard tubes, or shipping wedges.

Table 1 – Dimensions and Weights of A Relay Logic Transfer Switch (All figures are approximate)

30-1000 Ampere, 2, 3, 4 Poles

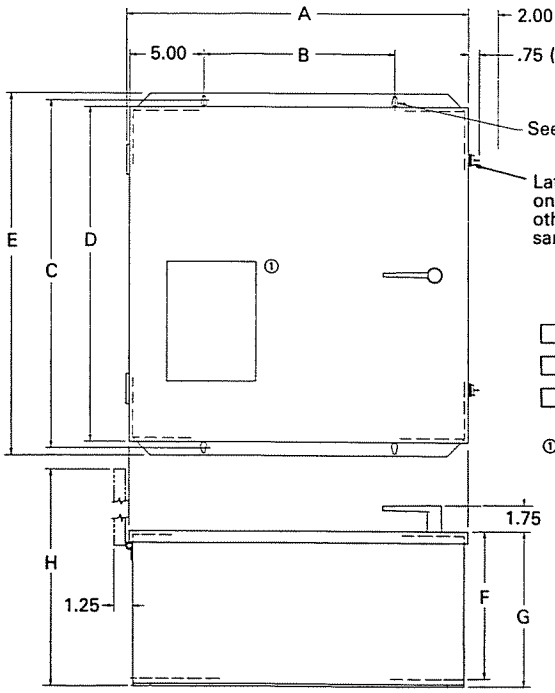

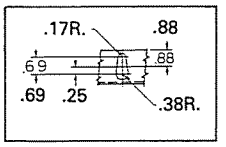

Detail A

	Approximate Shipping Weight (lbs.)
	Automatic
30-100 Amps	195
150-280 Amps	425
400 Amps	450
600 Amps	550
800-1000 Amps	625

Note: Add 10% for 4 Pole Units.

	A	B	C	D	E	F	G	H
☐ 30-100 AMP	28.88	19.13	39.74	39.62	41.50	9.72	10.22	38.25
☐ 150-400 AMP	38.88	29.13	49.74	49.62	51.50	17.28	17.78	55.81
☐ 600-1000 AMP	38.88	29.13	59.74	59.62	61.50	17.28	17.78	55.81

① Device panel supplied to house required pilot control devices (lights, selector switches, etc.)

Reproduced from Drawing 9194D18

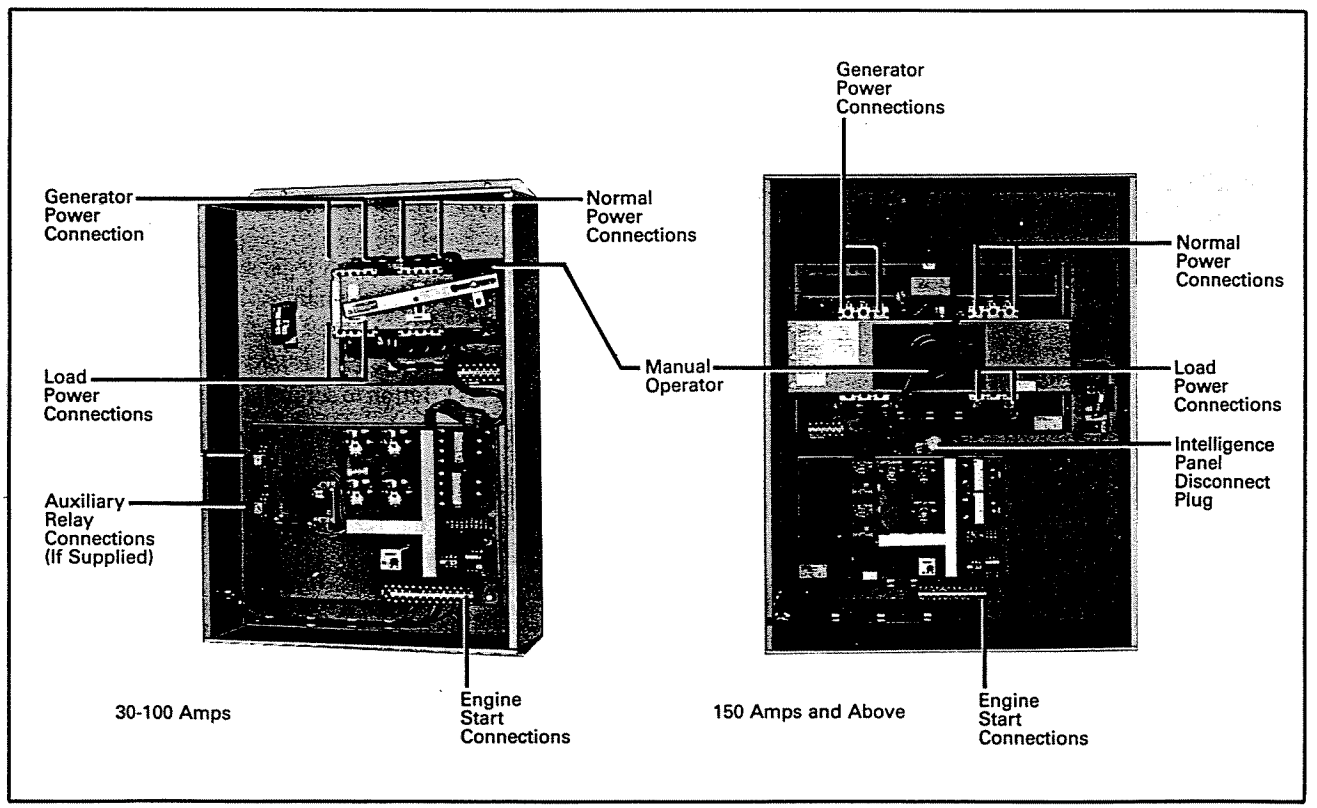

Fig. 2 *Wire Connections*

Wiring Connections

WARNING

HAZARDOUS VOLTAGES THAT CAN CAUSE DEATH OR SEVERE PERSONAL INJURY ARE PRESENT INSIDE TRANSFER SWITCH ENCLOSURES.

DE-ENERGIZE THE NORMAL, EMERGENCY AND ANY OTHER POWER SOURCE TO BE CONNECTED TO THE SWITCH BEFORE MAKING ANY POWER OR PILOT CIRCUIT CONNECTIONS.

1. Remove surface residue from conductors and use joint compound, if required. Tighten conductors and remove excess compound.
2. Disengage battery terminal from the engine-driven generator (if used).
3. Verify that the normal power, generator and load conductor wire sizes comply with local electrical codes.
4. In the required locations, provide the correct openings for the conduit being used. Provide proper protection for any drilled openings to avoid metal chips being dropped into electrical equipment.
5. Connect power sources, load conductors and control wiring to locations indicated by wiring diagrams supplied with unit. See Fig. 2. If Option 18 applies, connect load conductors to current transformer.
6. Specific connection diagrams can be found in the Transfer Switch Information Package.
7. Connect engine start wires to the red terminal blocks marked 51 and 52. See Fig. 2.

ACCESSORY ADJUSTMENTS

Plant Exercisor Timer

The Plant Exercisor used in Option 23 is a seven-day timer switch used to exercise the engine-driven generator.

Setting Time Of Day:

1. Push Reset Button [R] to clear all memory.
2. Press the Clock Button (⏲) The display should read 0:00.
3. Press the [H] button to set the hour of day.

   NOTE: Time is set in 24 hr. (military) time.
4. Press the [M] button to set the minutes of the hour.
5. Press the [1-7] button to select the day of week. Either Sunday or Monday can be designated as Day 1.
6. Press the Program Button [PR] to enter the time. The points between the hours and minutes will begin to flash.

Programming:

A. How to Set the Turn ON Time

1. Slide the Output Selector Switch to the clock or program mode.
2. Press [I/O] Button. (This button programs the ON and OFF times.) A logic symbol "I" will appear in the top display window. "I" is the symbol for "ON".
3. Press the [H] Button to set the hour of the day the program will start or "Turn ON".
4. Press the [M] Button to set the minute of the hour the program will start.
5. Pressing the [1-7] Button advances the day marker from 1-7 and back to 1. For each and every day to be selected, press the [Q] Button when the marker is over the desired day.

B. How to Set the Turn OFF Time

1. Press the [I/O] Button. A logic symbol "O" will appear in the bottom display window. "O" is the symbol for "OFF".
2. Press the [H] Button to set the hour and the [M] Button to set the minute, the program will end or "Turn OFF".
3. Press the [1-7] Button. For each and every day to be selected, press the [Q] Button when the marker is over the desired day.
4. To enter the "complete program" (Turn ON and Turn OFF times) press the Program [PR] Button. The display will return to the present time of day.
5. Repeat for all other "complete programs".

NOTE: A maximum of 10 "complete programs" may be entered into the 1100 Series. When the memory has reached its capacity, the display will read "FULL".

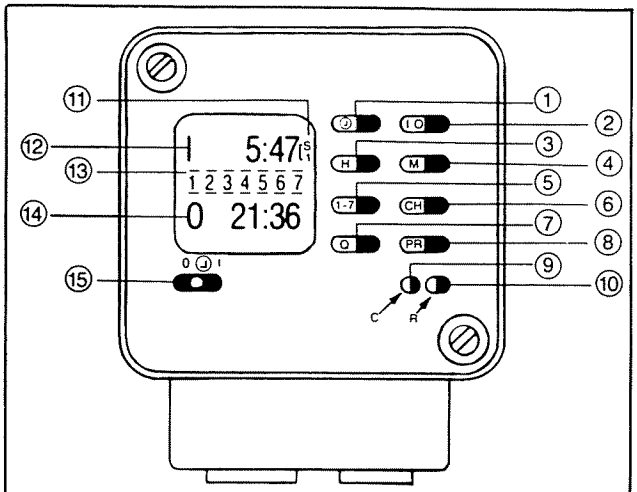

(1) Clock Mode — For setting time and day of week

(2) I/O — For programming "ON" and "OFF" cycles
I — Programs "ON" time
O — Programs "OFF" time

(3) Hours Setting

(4) Minutes Setting

(5) Day of Week Setting

(6) Checks programs successively which have been entered into the time switch

(7) "Q" Button — Enters days of the week to be programmed

(8) Program Button

(9) Clears selected programs, during or after program is entered

(10) Reset — Resets everything in memory, including time of day and all programs

(11) Output Energized Indicator

(12) Displays "On" Time

(13) Day Indicator

(14) Displays "Off" Time

(15) Output Switch — Program mode and output override
⏻ : In Program Mode
I : Output Energized
0 : Output De-energized

Fig. 3 *P.E. Timer*

6. Leave Output Switch (15) in the ⏻ program mode to activate the P.E. time sequence. The I output energized position will cause a continuous engine run condition. The O output de-energized position will bypass the exercise program entirely.

Adjustments of Timing Relays

Agastat Time Delays, See Fig. 4

Agastat Time Delay Relays used on Options 1A, 2A, 2B, 3A, 3C, 4A, 30A, and 32A are adjustable by rotating the dial or via screwdriver adjustment pots.

NOTE: Timer models SSFR90X must be set in the ON delay mode for proper operation.

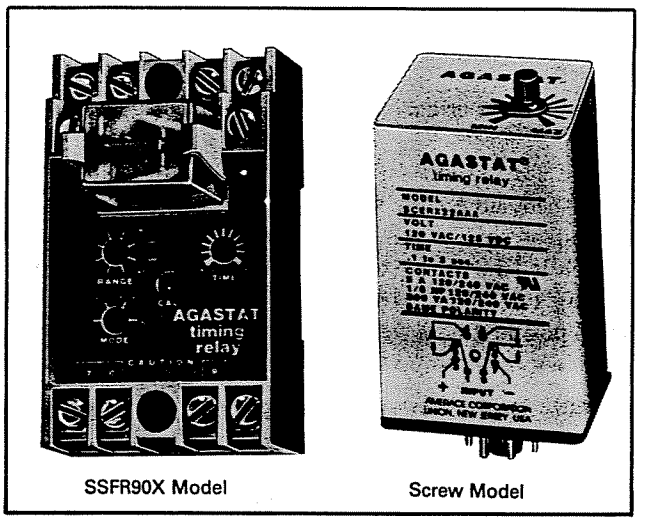

SSFR90X Model Screw Model

Fig. 4 *Time Delay Relays*

Battery Charger (Option 24)

When supplied, the battery charger is provided in a separate wall mounted enclosure (see Fig. 5 for mounting dimensions). Separate instructions and wiring information is provided with the charger for installation purposes.

NOTE: A separate 120 Vac control power supply is required for the battery charger input. No connections between the transfer switch and battery charger are required.

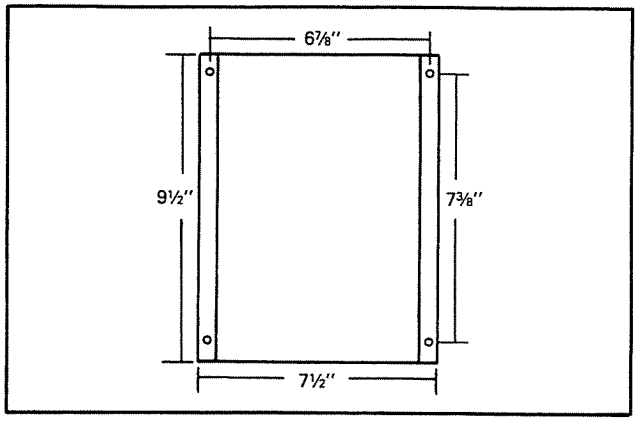

Fig. 5 *Mounting Dimensions*

TESTING

Functional Checkout Procedure

At installation or during planned power outages.

NOTE: If Option 4 (Time Delay Engine Cool-off) is furnished, an engine start signal will be present for a period of time equal to the timer setting, when the switch is first energized. To avoid starting the engine during this time, turn the generator controls to the OFF position.

Energize the transfer switch using the following steps:

WARNING

HAZARDOUS VOLTAGES MAY BE PRESENT THAT CAN CAUSE DEATH OR SEVERE PERSONAL INJURY.

AVOID CONTACT WITH ANY VOLTAGE SOURCE WHILE ENERGIZING THE TRANSFER SWITCH.

A. With No Voltage Available on Either Power Source

1. Both the Normal (NB) and Emergency (EB) power switching devices should be in the OPEN position. Breakers can be put into open position by use of manual operator and stopping in Neutral Position.

2. The Test Selector Switch (TSS) should be in the AUTO position.

3. When used, the Four Position Selector Switch (FPSS) should be in the "OFF" position.

4. If the Four Position Selector Switch (FPSS) is not used as in A3 above, the generator engine start controls should be in the OFF position to prevent an undesired start.

5. Pre-set all timing circuits per adjustment of timing relay instructions section to meet job specifications.

6. Pre-check all transfer switch loads to insure that they are ready to be energized.

B. Connect Power Sources

1. Close the Normal source upstream protection device.

   a) If the Four Position Selector Switch (FPSS) is not used as in A4, the Normal power switching device (NB) should close.
   b) If the Four Position Selector Switch (FPSS) is used as in A4 and is in the OFF position, the Normal power switching device (NB) will not automatically close. Place FPSS switch in AUTO position.

2. Connect the engine-start battery cable.

3. With the emergency generator in the OFF position, close the Emergency source upstream protective device, if one is used.

NOTE: Prior to making any attempt to energize the transfer switch, the engine-driven generator should be operated. If necessary, the voltage regulator on the generator should be adjusted according to the manufacturer's recommendations. The automatic transfer switch will respond only to rated voltage and frequency indicated on the switch rating nameplate.

4. Reclose any generator engine-start controls opened as a result of Step A4.

5. Where required, use an accurate voltmeter to check phase-to-phase and phase-to-neutral voltages present at the transfer switch normal, emergency and/or load terminals.

C. Operational Checks – Without Four Position Selector Switch (FPSS)

1. The Normal switching device (NB) should be in the CLOSED position as a result of step B.1.a.

2. Initiate an automatic transfer operation from the normal to emergency power source by moving the Test Selector Switch (TSS) from the AUTO to the TEST position.

a) The engine should start and run, building up to normal voltage and frequency within a few seconds, depending upon the machine characteristics. If a Time Delay on Engine Starting (TDES) option is provided, it must time out before the engine will start.

b) The transfer switch will transfer to the Emergency power source, i.e., NB will open and EB will close, after the Time Delay Normal to Emergency (TDNE) times out, if one is provided.

3. Initiate an automatic transfer operation back to the Normal power source by moving the Test Selector Switch (TSS) from the TEST to the AUTO position.

a) The transfer switch will transfer back to the Normal power source, i.e., EB will open and NB will close.

b) The transfer to normal power will be delayed by the Time Delay Emergency to Normal (TDEN) option when provided.

c) The Time Delay for Engine Cool-off (TDEC) option, when provided, will allow the engine to run unloaded for a pre-set time after transfer to normal power is completed.

D. Operational Checks – With Four Position Selector Switch (FPSS)

1. The operational checks with the Four Position Selector Switch are similar to the Two Position Selector Switch described in procedure C except two additional positions are provided, i.e., OFF and ENGINE START.

a) In the OFF position, all control relays are de-energized and the engine start circuit is opened. The transfer switch will not transfer nor will the engine start. A white light lights up to indicate that the selector switch (FPSS) is in the OFF position and normal power source is available.

b) In the ENGINE START position, the transfer switch remains in the normal power source position, i.e., NB closed and EB open and the engine start circuit is closed, thus starting the engine. The transfer switch will not change power sources unless the Normal power source fails.

c) Return the test switch (FPSS) to the AUTO position. The engine will immediately stop running.

E. Alternate Tests

1. Alternate operational tests may be possible depending upon the options provided with any given transfer switch. Refer to the schematic diagram provided with the transfer switch, along with the specification nameplate, to determine the exact options provided.

2. If the transfer switch is operated manually with the Normal source connected, it will cycle back to Normal since it is the preferred source. A rachet is designed into the handle of 150 amp and larger switches so that it can be held stationary during automatic operation, thus preventing injury to the operator.

TROUBLESHOOTING

WARNING

HAZARDOUS VOLTAGES THAT CAN CAUSE DEATH OR SEVERE PERSONAL INJURY MAY BE PRESENT.

AVOID CONTACT WITH ANY VOLTAGE SOURCE WHILE TROUBLESHOOTING THE TRANSFER SWITCH.

A. Generator Set Does Not Start When Test Switch is Operated

1. Check operation. Make sure selector switch (TSS) is in TEST position until the time delay on engine starting (TDES) times out.

2. Check engine controls. Make sure selector switch is in AUTO START position. Make sure batteries are charged and connected.

3. Check wiring. Make sure the start signal wires from the engine controls are connected to the correct terminals on the control panel (Red Terminals 51 and 52).

4. Check signal circuit. Disconnect and tape start signal wires. Connect ohmmeter between terminals 51 and 52. Reading should indicate an open circuit. Operate test switch. After Time Delay on Engine Starting (TDES) times out, ohmmeter should indicate a closed circuit.

B. When Generator Set is Running, and Normal Source is Below System Dropout Settings, Transfer Switch Does Not Transfer the Load to Emergency

1. Check operation. Allow sufficient time for Time Delay Normal to Emergency (TDNE) to time out.

2. Check engine controls. Check generator output frequency and voltage. Output should typically be at least 85% of nominal voltage and 95% of nominal frequency, unless frequency and voltage sensing function options for emergency source are ordered which provide closer tolerances. Make sure generator upstream protective device is closed.

3. Check wiring. With a voltmeter, read phase-to-phase voltage between transfer switch terminals E1 and E2.

C. Transfer Switch Does Not Retransfer the Load After Normal Source is Returned, or After Test Switch (TSS) is Returned to the Automatic Position

1. Check operation. Make sure that sufficient time has passed to allow Time Delay Emergency to Normal (TDEN) to operate.

2. Check normal source voltage levels. With a voltmeter, read phase-to-phase voltage between transfer switch terminals N1 and N2.

3. Check signal circuit. Confirm that the test switch (TSS) has reclosed by measurng 120 volts between terminals 60 and 61.

D. Transfer Switch Retransfers the Load, but Generator-Set Continues to Run

1. Check operation. Make sure that sufficient time has passed to allow Time Delay Engine Cool-off (TDEC) to operate.

2. Check engine controls. Make sure engine starting control circuit is in the AUTO START position.

3. Check signal circuit. Disconnect and tape wires to terminals 51 and 52. Connect ohmmeter between these terminals; reading should indicate an open circuit.

If above problem(s) continue, or other problems exist, contact your local Westinghouse sales representative or call the factory at 800-354-2070.

OPERATION

Operation Sequence

NOTE: Only standard options are included in this operation sequence. Follow each step below while reviewing the schematic diagram provided with the transfer switch.

Normal Source Failure

Standard normal source failure is defined as a reduction or loss of voltage. The sequence is as follows:

1. A voltage reduction in any phase of a three phase unit (or a phase-to-phase reduction on a single phase unit) is monitored by Voltage Sensing Relays (VSR).

2. With a voltage reduction, the relay(s) de-energize at a preset voltage dropout point.

3. With the VSR contact open, the Normal Relay (NR) then drops out, opening some contacts while closing others. One contact starts the engine-driven generator.

4. When the emergency source voltage reaches operation rating, an Emergency Relay (ER) closes, starting the transfer operation. This operation opens the Normal Breaker (NB) and closes the Emergency Breaker (EB).

5. The transfer switch then supplies the load with emergency power until the normal source is restored.

Normal Source Restoration

1. The return to the normal power source begins when the voltage in all phases of a three phase sensing unit, (or phase-to-phase in a single phase sensing unit) is restored to a pre-set value.

2. At the preset pickup voltage, the VSR's operate causing the Normal Relay (NR) to pickup.

3. This NR closes several contacts while opening others, thus starting the return to normal transfer switch operation.

4. This operation opens the Emergency source breaker (EB) and closes the Normal source breaker (NB).

5. At the same time, the NR initiates the shut down of the engine driven generator.

6. The transfer to the normal power source is complete.

NOTE: This sequence is for standard units only. The sequence can be modified and expanded with the addition of options stated in the General Information section.

MANUAL OPERATION

Should manual operation be required, first isolate the transfer circuit by removing the disconnect plug located on the transfer motor (see Fig. 6) or, if the unit is supplied with a Four Position Selector Switch, it should be turned to the OFF position (in these cases, it is not necessary to remove the disconnect plug). Any attempt to operate the handle without first isolating the transfer motor causes an automatic transfer cycle. If the switch does not have a disconnect plug or a four position selector switch, turn the upstream protective device OFF to prevent an automatic cycle.

30, 70 and 100-Ampere Switches (See Fig. 2)

To operate manually and to disconnect the motor circuit, unscrew and remove the reverse threaded nut which functions as a rotating lever slide pin in the rocker arm lever.

Pivot the rocker arm lever until the desired position is achieved. No special tools are required. The rocker arm lever nameplate indicates switch position.

NOTE: The slide pin is a left-hand threaded. Remove by unscrewing clockwise.

150 Ampere and Above Switches (See Fig. 2)

Rotate the black handle in a counterclockwise direction until the desired position is reached. The nameplate has an indicator that shows switch position. The handle freewheels in the clockwise direction so that if electrical operation occurs the handle will not rotate.

MAINTENANCE

The Relay Logic transfer switch is maintenance free under normal usage. Local conditions, however, may make it necessary to periodically blow dust and dirt from the relays and timers, and to see that grease or oil does not accumulate on the switch components.

Good maintenance procedures call for periodic inspection of all electrical apparatus. Terminal lugs must be tight to prevent overheating. Due to the self cleaning action built into the contact system of the switch, operating the switch during regular sequence checks will remove any high resistance film that may have formed.

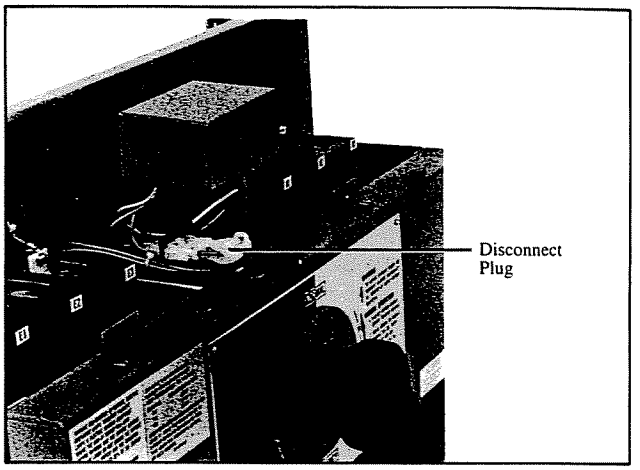

Fig. 6 *Location of Disconnect Plug, 150 ampere and above*

If the plant exercisor is not installed, use the test switch (TSS) to periodically check the electrical operation of the ATS. Always return the switch to the AUTO position when the test is completed.

CAUTION

The transfer switch should be serviced by an authorized factory representative only. Contact Westinghouse at (800) 354-2070 to arrange for factory authorized service and/or maintenance.

OPTIONS FOR RELAY LOGIC TRANSFER SWITCHES

Westinghouse provides an extensive list of options available for the single panel transfer switch. Below is a brief description of their functions. Many of these options can be field mounted to allow modification to the switch as the customer's needs develop and change. For this reason, it is essential that the electrical diagrams sent with the ATS be retained for future reference.

1. Time Delay Normal to Emergency (TDNE)

Delays the transfer from normal in order to override momentary power outages/fluctuations. Timing begins when Emergency source appears. Does not affect initiation of engine start circuit.

A. Adjustable 1-60 seconds.

2. Time Delay on Engine Starting (TDES)

This option is for use only where the emergency source is an engine generator. It delays initiation of the engine

start circuit in order to override momentary power outages or fluctuations.

A. Adjustable .5 to 15 seconds.
B. Adjustable 4 to 120 seconds.

3. Time Delay Emergency to Normal (TDEN)

Delays the transfer from emergency to permit stabilization of the normal power source before re-transfer is made. Timing begins when the normal source appears. If the Emergency source fails during timing, transfer to Normal source is immediate, overriding the time delay.

A. Adjustable 0 to 60 seconds.
C. Adjustable 0 to 30 minutes.

4. Time Delay for Engine Cooloff (TDEC)

Permits the generator to run under a no-load condition after transfer to Normal has been made. Timing begins when transfer is made.

A. Adjustable 0 to 30 minutes.

5B. Frequency/Voltage Relay for Emergency Source (FR)

Relay is connected to one phase only of the Emergency source, constantly monitoring that phase. Prevents transfer from Normal to Emergency until the engine generator has reached its operating frequency and voltage. When switch is in the Emergency position and the Emergency source is outside the relay setting, the switch will initiate transfer to the Normal position if the Normal source is present, provided that test switch (TSS) is in the AUTO position.

6. Test Switch

Provides test operation of the transfer switch by simulating a loss of normal power. Engine starting will be initiated and transfer to the Emergency source will occur. A maintained 2 position test switch (TSS) is supplied as standard.

Momentary Contact (Pushbutton) (TPB)

B. In cover of enclosed switch.

7. Four Position Selector Switch (FPSS)

Permits four modes of switch operation: TEST, AUTO, OFF, and ENGINE START. The OFF position de-energizes the control relays and opens the engine start circuit. The switch will not operate nor will the engine start on power failure. A white light is also furnished that lights only when the switch is in the OFF position. The TEST position simulates power failure. Engine starting is initiated and the switch will transfer when emergency voltage appears. The AUTO position returns the transfer switch to Normal operation. The ENGINE START position retains the transfer switch in normal and initiates the engine start circuit. The switch will not transfer unless the normal source fails.

D. In cover of enclosed switch. When selected standard test switch is omitted.

8. Bypass Pushbutton

Provides a by-pass on the TDEN (Option 3) relay, permitting switch to be re-transferred to Normal source without time delay. Option is normally used in testing when it is not desirable to wait for the timer to finish its timing sequence.

C. Bypass TDEN (PBEN) in enclosure cover.

11. Circuit Breaker Reset

This option provides means of resetting thermal-magnetic breakers when used in the transfer switch.

D. Normal Breaker Reset PB in cover of Enclosed Switch.
E. Emergency Breaker Reset PB in cover of Enclosed Switch.
F. Circuit Breaker Lock-out: Prevents transfer if breaker trips (supplied as standard with Options 16A, 16E, 16F and 17A).

12. Pilot Lights

Pilot lights can be furnished to indicate (1) switch position; (2) source condition; and (3) tripped condition.

Switch Position: Utilizes a 1A breaker auxiliary contact.

C. Normal Supply (green) in cover of enclosed switch.
D. Emergency Supply (red) in cover of enclosed switch.

Source Condition: Indicates whether or not source voltage is present..

G. Normal Supply (white) in cover of enclosed switch.
H. Emergency Supply (white) in cover of enclosed switch.

Tripped Condition: Available only with thermal-magnetic breakers, Options 16 and 17.

L. Normal Supply (amber) in cover of enclosed switch.
M. Emergency Supply (amber) in cover of enclosed switch.

14. Relay Auxiliary Contact

The Normal source relay is energized only when the switch is in the Normal position and Normal power is present. The Emergency source relay is energized whenever the Emergency source is present.

A. Normal Source: Provides 1 NO and 1 NC contacts. (NRA)①
B. Emergency Source: Provides 1 NO and 1 NC contacts. (ERA)①

16. Thermal Magnetic Breakers in Place of Standard High Instantaneous Trip Breakers

Use of this option can, in many cases, eliminate the need for separate upstream overcurrent/short circuit protection, thus enabling code requirements to be met with a device that takes up less space and requires less wiring. Either the Normal or Emergency breaker, or both, may be replaced. Includes Option 11F.

A. Thermal Magnetic: Switch ratings and trip ratings available.

Switch Rating (Amps)	Availability		Trip Ratings (Amps)
	2 Pole	3 Pole	
30	X	X	15,25,30
70	X	X	15,25,30,40,50,60,70
100	X	X	15,25,30,40,50,60, 70,90,100
150-280	X	X	70,90,100,125,150, 175,200,225
400	X	X	250,300,350,400

E. Thermal Magnetic Breaker, emergency source only.
F. Thermal Magnetic Breaker, normal source only.

17. MARK 75® Circuit Breakers or in Place of Standard High Instantaneous Trip Breakers (Includes Option 11F)

A. Thermal Magnetic MARK 75 or High Withstand Series C

Switch Rating (Amps)	Availability		Trip Ratings (Amps)
	2 Pole	3 Pole	
30	X	X	Same as Option 16A
70	X	X	
100	X	X	
150-280	X	X	
400	X	X	

18. Instrumentation

E. Voltmeter mounted in cover (includes potential transformers and selector switch).
F. Ammeter mounted in cover (includes current transformers and selector switch).①
G. Frequency Meter.
H. Running Time Meter.

NOTE: Above options E through H might require separate enclosure. Contact Westinghouse.

21. Non-Standard Terminals

23. Plant Exercisor (PE)

Digital clock timer provides for automatic test operation of the plant for pre-selected intervals (adj. 0-168 hrs. in multiples of 15 minutes) at least once a week, mounted on intelligence circuit.

C. Without interrupting normal supply.
D. By simulation of power failure.
G. Plant Exercisor with Selector Switch for choosing 23C, 23D, or for bypassing exercisor.

24. Battery Charger (BC)

The trickle charge Dc output is 12 or 24 volts. Units are supplied in separate enclosure for wall mounting. Automatic high-low charge rate with 2 amp high rate maximum.

C. 12 volt①
D. 24 volt①

① Field wiring necessary for these options.
Refer to separate wiring information supplied with charger.

29. Type of Operation

D. Pushbutton Operation Only. Includes two pushbuttons for operating the transfer switch from normal to emergency and from emergency to normal. No automatic operation is included.

E. Pushbutton Return to Normal. Automatic operation normal to emergency, pushbutton operation emergency to normal.

F. Same as Option 29C except pushbutton in cover of enclosed switch.

G. Automatic/Manual Operation. Two position selector (marked Auto/Manual) permits selection of automatic or manual operation. Includes Option 29D which only operates when the switch is in the manual mode.

30. Cranking Limiter

A. Adjustable 0-120 seconds. Interrupts motor start circuit if voltage does not appear within pre-selected time.

31. Audible Alarm with Silencing Switch (AL)

Sounds alarm when switch is in the emergency position and emergency voltage is present.

B. Enclosure mounted.

32. Delayed Transition Timer

Provides a time delay in the Neutral position when the load is transferred in either direction to prevent excessive inrush currents due to out-of-phase switching of large motor loads. Utilizes a 1A Breaker auxiliary contact.

A. Adjustable 0 to 120 seconds.

33. Shunt Trip

Wired to terminal blocks for customer connection. Specify coil voltage desired.

A. Supplied in Normal breaker. ②
B. Supplied in Emergency breaker. ②

35. Pretransfer Signal Device

A. Provides contacts for interface with other equipment (typically elevator controls) prior to transfer in either direction.

② Field wiring necessary for these options.
See Wiring Schematic supplied with ATS.

Westinghouse Electric Corporation
Distribution and Control Business Unit
Electrical Components Division
London, KY 40741

Zenith Coil Test Information

Part #	Line Voltage	Coil Resistance (Ω) ± 6%
K-2207	120	6.0
K-2208	208	18.1
K-2209	480	89.6
K-2211	277	44.7
K-2212	380/415	62.8
K-2213	575/600	162.4
K-2228	240	28.8
K-2229	120	1.8
K-2230	208	5.3
K-2231	240	5.3
K-2232	277	14.4
K-2233	380/415	20.1
K-2234	480	28.5
K-2235	575/600	47.2

Notes:

1. Full wave rectified DC for a pulse time of .5 sec
2. Duty cycle 10 %

Zenith MX 100

Transfer Switch jumpers

Shaded areas are blind stabs and have no electrical connections. Example: if there is no jumper on W5 the board will recognize 60 hertz.
All of the stabs are paired except W14 FTS (L)

W4	60 HZ	
W5	50 HZ	
W6	3 PHASE	
W7	1 PHASE	
W8	ST MODEL	STANDARD MODEL
W9	DLY MODL	DELAY MODEL
W10	DIS CCTD	DISABLE COIL CONTROL TIME DELAY
W11	EN CCTD	ENABLE COIL CONTROL TIME DELAY
W12	TS (L)	TEST SWITCH WITH LOAD
W13	TS (NL)	TEST SWITCH WITH NO LOAD
W14	FTS (L)	FAST TEST SWITCH WITH LOAD (T) 30 SEC
W15	AUTO TST	FOR FACTORY USE
W16	RUN	
W17	ATR BYP	*NOT A BYPASS SWITCH* *exception see note below*
W18	ATR EN	*BYPASS SWITCH** exception see note below*

*For 600 amp units and above or for F17 transfer switches, change the jumper from ATR BYP to ATR EN

OPERATION AND MAINTENANCE MANUAL
TRANSFER SWITCH CONTROL PANEL
MX100 MICROPROCESSOR CONTROLLER

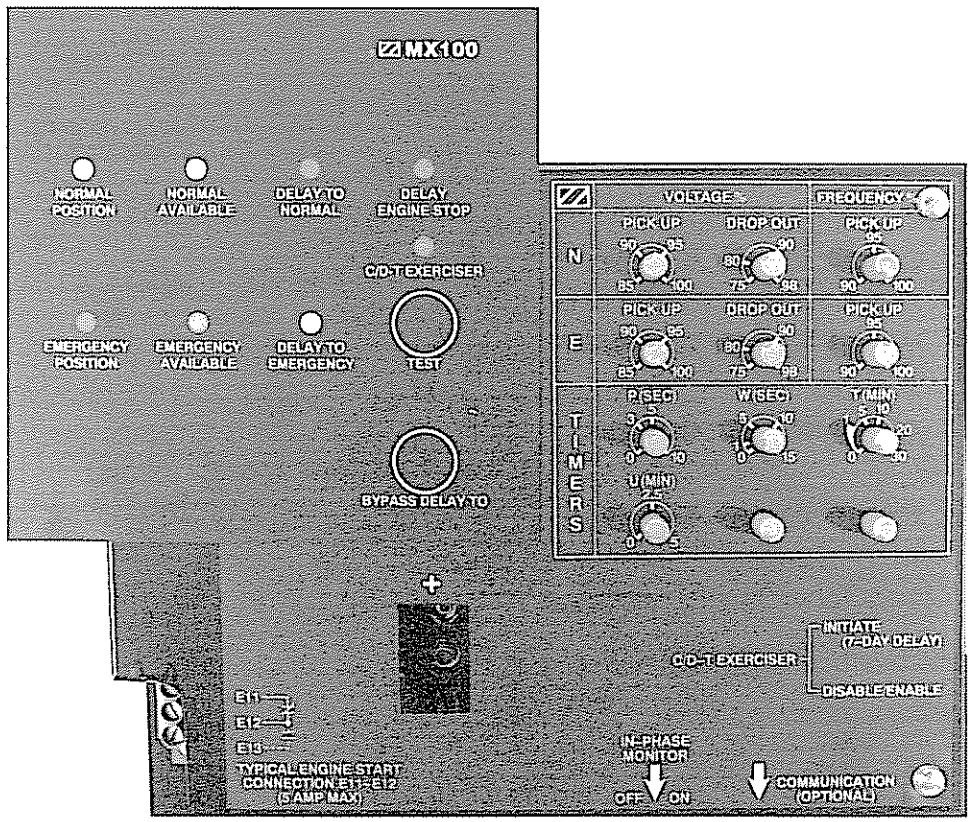

ZENITH CONTROLS, INC.

ISO 9001

50R-1000C
5/99

Table of Contents

Page

Safety 1
- Final Equipment Inspection 1
- Equipment Inspection and Storage 1

Installation 2
- Engine Start Control Connections 2
- Initial Energization 3

Operation and Testing 4
- Standard Transition ATS Testing (w/o A6 or T3/W3) 4
- Delayed Transition ATS Testing 5
- Standard Transition ATS Testing (w/A6 or T3/W3) 6
- Operation Sequence 8

Control Features and Options 9
- Control Features 9
- Control Options 10

User Settings 11
- Voltage and Frequency Pickup/Dropout Adjustments 12
- Timer Adjustments 12

Relay/Transformer Box (R/T Box) 14
- Standard Transition 14
- Delayed Transition 15
- Standard Transition R/T Box Schematic 16
- Delayed Transition R/T Box Schematic 16

Troubleshooting and Diagnostics 17
- General Troubleshooting Chart 17
- Diagnostic Annunciation 18
- Standard Transition ATS (two position ATS) 18
- Delayed Transition ATS (three position ATS) 19
- Standard Transition ATS (with A6) 20

Safety

⚠ DANGER

HAZARDOUS VOLTAGE
(Can Cause Severe Injury or Death)

Turn OFF all power before installation, adjustment, or removal of transfer switch or any of its components.

Installation for each ATS is detailed in the information package which includes:

- Operation and Maintenance Manual for Control Panel (this manual)
- Power Panel Manual
- Specific Schematics Supplied With Each Transfer Switch

Final Equipment Inspection

Prior to energizing the transfer switch:

1. Remove any debris incurred due to shipment or installation. **DO NOT** use a blower since debris may become lodged in the electrical and mechanical components and cause damage. Use of a vacuum is recommended.
2. Verify that all cabled connections are correct and that phase rotation of both sources match.
3. Check engine start connections and verify the correct connection of all control wires.
4. Check settings of all timers and adjust as necessary. Also adjust any optional accessories as required.
5. Check the integrity of power connections by verifying actual lug torque values as specified in the power panel manual.
6. Make sure that all covers and barriers are installed and properly fastened.

NOTE: Power Panels ship from Zenith in the Normal Position.

Equipment Inspection and Storage

Immediately inspect the transfer switch when received to detect any damage which may have occurred during transit. If damage is found or suspected, file claims as soon as possible with the carrier and notify the nearest Zenith representative.

Before installation, it is necessary to store the transfer switch in a clean dry place, protected from dirt and water. Provide ample air circulation and heat, if necessary, to prevent condensation.

Storage Temperature:	-30 C to + 85 C (-22 F to +149 F)
Operating Temperature (Ambient):	-20 C to +75 C (-4 F to +167 F) [40-260 Amps] -20 C to +60 C (-4 F to +104 F) [400-4000 Amps]
Humidity:	5% to 95% (non-condensing)

Katolight Service - Master Repair Manual - Page 4287

Installation

⚠ DANGER

HAZARDOUS VOLTAGE
(Can Cause Severe Injury or Death)

Turn OFF all power before installation, adjustment, or removal of transfer switch or any of its components.

Engine Start Control Connections

Engine-start control wires connect to control terminals below of the MX100. Engine start terminals are indicated by a schematic symbol (the symbol indicates the contact state for a de-energized Normal source). Figure 1 shows the engine-start contacts.

Make all other necessary control connections to the control panel terminal blocks per the schematics supplied with the ATS. **All control wires (18-12 AWG) must be torqued to 19 in-lbs.**

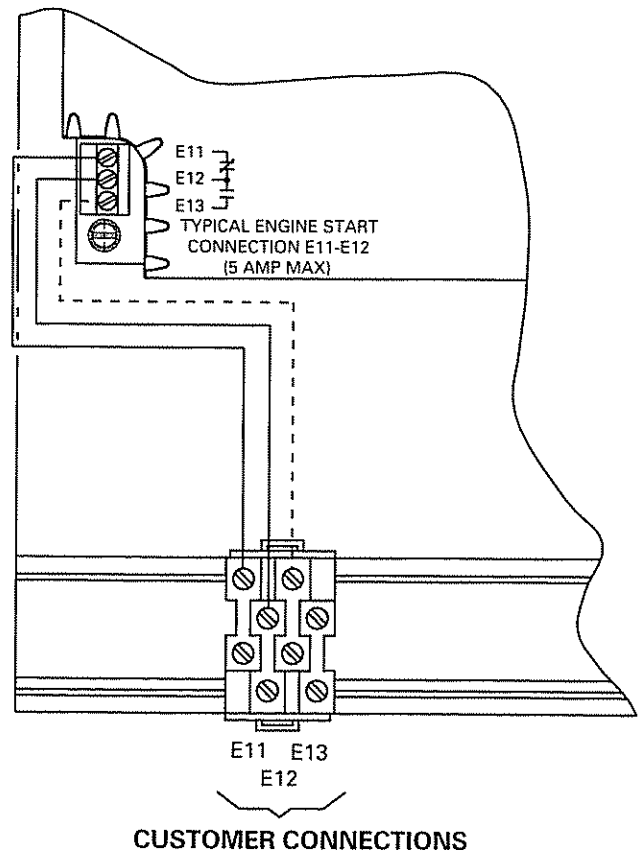

Figure 1 - Din Rail

Katolight Service - Master Repair Manual - Page 4288

⚠ DANGER

HAZARDOUS VOLTAGE
(Can Cause Severe Injury or Death)

Turn OFF all power before installation, adjustment, or removal of transfer switch or any of its components.

Initial Energization

Functional testing of the ATS consists of electrical tests described in this section. Before proceeding, refer to the information package supplied with the ATS and read and understand the information on all accessories provided. (Caution: Certain accessories, per specific schematics, can inhibit automatic transfer. See Section 3.)

After all options and accessories are checked and verified, follow these steps to set up the ATS. Refer to MX100 display Figure 2. The annunciation LEDs illuminate to indicate (1) source availability, (2) ATS position, and (3) MX100 control function (timing).

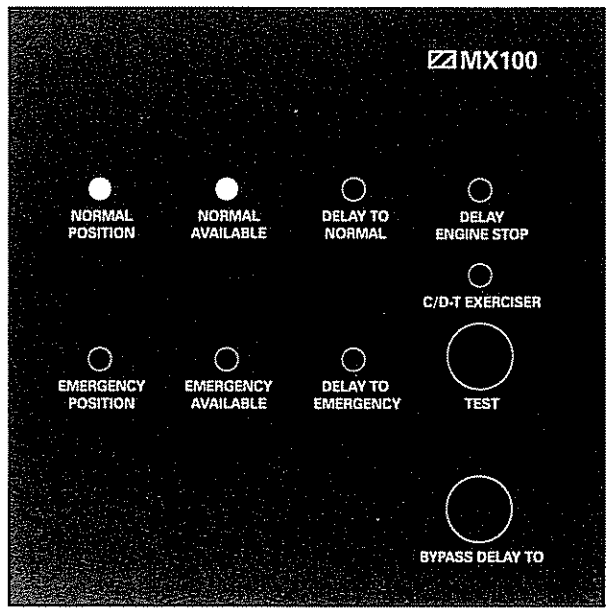

Figure 2 - Standard Transition Annunciation LEDs and Test Switch

⚠ CAUTION

Engine Gen-Set could start when engine control wires are attached.

NOTICE: **If LEDs are flashing, refer to Troubleshooting and Diagnostics.**

Step 1: If equipped with the disconnect switch (DS) option, turn to INHIBIT. Close the external (up-stream) Normal circuit breaker. The Normal Available and Normal Position LEDs illuminate. (If the Normal Available LED does not illuminate verify that Normal source voltage is above the preset pick-up value.) On initial start-up, the Delay to Engine Stop Timing LED will illuminate for the duration of its setting.

NOTICE: **Gen-Set will start and run while Delay to Engine Stop is timing.**

Step 2: Close the external (up-stream) Emergency line circuit breaker and start the engine generator in MANUAL mode. When the voltage and the frequency reach preset values, the Emergency Available LED will illuminate.

Step 3: Verify the line-to-line voltages at the Emergency line terminals, and verify that the Emergency and Normal source phase rotations are the same (either A-B-C or A-C-B).

Step 4: After the sources have been verified, shut down the engine generator (place in AUTOMATIC mode). The Emergency Available LED will turn off.

NOTICE: **Engine generator will continue to run if Delay to Engine Stop Timing LED is illuminated.**

Step 5: Turn the DS (disconnect switch) to ENABLE if so equipped. Make a final inspection of the ATS and close and lock the cabinet door.

Katolight Service - Master Repair Manual - Page 4289

Operation and Testing

Standard Transition ATS Testing (w/o A6 or T3/W3)

For this test description, please refer to MX100 standard transition display *Figure 2*.

Initiate testing with the ATS in Normal position and Normal power available (Normal Position and Normal Available LEDs illuminated). **Press and hold the test switch until transfer (releasing the test switch prematurely will abort the test).** The delay to engine start timer (P) begins its timing cycle. After the P timer has completed its timing cycle, the engine start contacts close to start the generator.

When Emergency voltage and frequency reach preset pickup points the Emergency Available LED illuminates. Simultaneously, the delay to emergency timer (W) begins its timing cycle and the Delay to Emergency LED illuminates. When the W time delay is completed the switch will transfer to emergency. The Delay to Emergency and Normal Position LEDs go off, and the Emergency Position LED illuminates.

Release the test switch to start retransfer to Normal. The delay to normal timer (T) begins its timing cycle illuminating the Delay to Normal LED. When the T timer has completed its timing cycle the switch will transfer into Normal. The Delay to Normal and Emergency Position LEDs go off, and the Normal Position LED illuminates. The delay engine stop timer (U) begins its timing cycle and the Delay Engine Stop LED illuminates. The generator runs unloaded for the duration of the U timing cycle. When the timer completes its timing cycle, the generator will stop. The Delay Engine Stop and the Emergency Available LEDs go off.

⚠ NOTICE

A periodic test of the transfer switch under load conditions is recommended to insure proper operation. (See National Electric Code articles 700 and 701).

Standard Transition Transfer Sequence (w/o A6 or T3/W3)	LED Annunciation Status						
	Normal Position	Normal Available	Emergency Position	Emergency Available	Delay to Normal	Delay to Emergency	Delay Engine Stop
Normal Position	●	●					
W Time Delay	●	○		●		●	
Emergency Position		○	●	●			
T Time Delay		●	●	●	●		
Normal Position/ Engine Overrun Timer	●	●		●			●

○ **Illuminated only when running TEST, not on Normal power failure**

Katolight Service - Master Repair Manual - Page 4290

Delayed Transition ATS Testing

Refer to Delayed Transition display Figure 3. Initiate testing with the ATS in Normal position and Normal power available (Normal Position and Normal Available LEDs illuminated). Press and hold the test switch until transfer (releasing the test switch prematurely will abort the test).

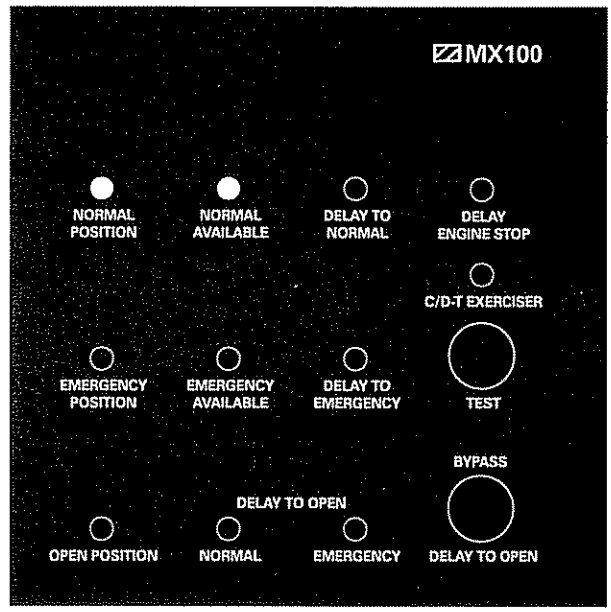

Figure 3 - Delayed Transition Annunciation LEDs and Test Switch

The delay to engine start timer (P) begins its timing cycle. After the P time delay the engine start contacts close to start the generator.

When Emergency voltage and frequency reach the preset pickup points the Emergency Available LED illuminates. Simultaneously, the delay to open normal timer (W) begins its timing cycle and the Delay to Open Normal LED illuminates. After the W time delay the ATS transfers out of Normal position into the Open position. The Delay to Open Normal and Normal Position LEDs go off, and the Open Position and Delay to Emergency LEDs illuminate. (Releasing the test switch now will allow the test to continue.)

Time delay to emergency (DW) then begins. When the DW time delay is completed the switch will transfer to Emergency. The Delay to Emergency and Open Position LEDs go off, and the Emergency Position LED illuminates.

The MX100 microcontroller will automatically begin the retransfer sequence to Normal. The delay to open emergency (T) timer begins its timing cycle and the Delay to Open Emergency LED illuminates. When the T timer has completed its timing cycle, the ATS transfers to the open position. The Delay to Open Emergency and the Emergency Position LEDs turn off, and the Open Position and the Delay to Normal LEDs illuminate. The delay to normal timer (DT) then begins its timing cycle illuminating the Delay to Normal LED. When the DT timer has completed its timing cycle the ATS will transfer out of the open position into the Normal position. Delay to Normal and the Open Position LEDs turn off, and the Normal Position LED illuminates.

The delay engine stop timer (U) begins its timing cycle and the Delay Engine Stop LED illuminates. The generator runs unloaded for the duration of the U timing cycle. Upon completion of the U time delay, the generator will stop. The Delay Engine Stop and the Emergency Available LEDs go off.

Katolight Service - Master Repair Manual - Page 4291

⚠ NOTICE

A periodic test of the transfer switch under load conditions is recommended to insure proper operation. (See National Electric Code articles 700 and 701).

Delay Transition Transfer Sequence	LED Annunciation Status									
	Normal Position	Normal Available	Emergency Position	Emergency Available	Delay to Normal	Delay to Emergency	Delay Engine Stop	Open Position	Delay to Open Normal	Delay to Open Emergency
Normal Position	●	●								
W Time Delay	●	○		●					●	
Open Position/ DW Time Delay		○		●		●		●		
Emergency Position		○	●	●						
T Time Delay		●	●	●						●
Open Position/ DT Time Delay		●		●	●			●		
Normal Position/ Engine Overrun Timer	●	●		●			●			

○ **Illuminated only when running TEST, not on Normal power failure**

Standard Transition ATS Testing (w/A6 or T3/W3)

Refer to Standard Transition w/A6 or T3/W3 display Figure 4. Initiate testing with the ATS in Normal position and Normal power available (Normal Position and Normal Available LEDs illuminated). Press and hold the test switch until transfer (releasing the test switch prematurely will abort the test).

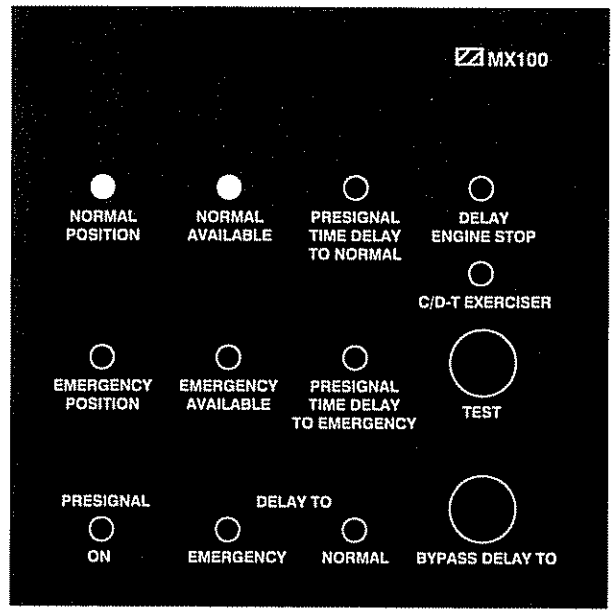

Figure 4 - Standard Transition w/A6 Annunciation LEDs and Test Switch

The delay to engine start timer (P) begins its timing cycle. After the P time delay the engine start contacts close to start the generator.

When Emergency voltage and frequency reach the preset pickup points the Emergency Available LED illuminates. Simultaneously, the delay to emergency timer (W) begins its timing cycle and the Delay to Emergency LED illuminates. After the W time delay the ATS presignal is initiated. The Delay to Emergency and Normal Position LEDs go off, and the Presignal On and Presignal Time Delay to Emergency LEDs illuminate. (Releasing the test switch now will allow the test to continue).

Katolight Service - Master Repair Manual - Page 4292

Presignal Time Delay to emergency (TA6) then begins. When the TA6 time delay is completed, the switch will transfer to Emergency. The Presignal Time Delay to Emergency and Presignal On LEDs go off, and the Emergency Position LED illuminates.

The MX100 microcontroller will automatically begin the retransfer sequence to Normal. The delay to normal (T) timer begins its timing cycle and the Delay to Normal LED illuminates. When the T timer has completed its timing cycle, the ATS presignal is initiated. The Delay to Normal and the Emergency Position LEDs turn off, and the Presignal On and the Presignal Time Delay to Normal LEDs illuminate. The Presignal Time Delay to normal (TA5) then begins. When the TA5 timer has completed its timing cycle, the ATS will transfer to the Normal position. Presignal Time Delay to Normal and Presignal On LEDs turn off, and the Normal Position LED illuminates.

The delay engine stop timer (U) begins its timing cycle and the Delay Engine Stop LED illuminates. The generator runs unloaded for the duration of the U timing cycle. Upon completion of the U time delay, the generator will stop. The Delay Engine Stop and the Emergency Available LEDs go off.

⚠ NOTICE

A periodic test of the transfer switch under load conditions is recommended to insure proper operation. (See National Electric Code articles 700 and 701).

Standard Transition Transfer w/A6 or T3/W3 Sequence	LED Annunciation Status									
	Normal Position	Normal Available	Emergency Position	Emergency Available	Presignal Time Delay to Normal	Presignal Time Delay to Emergency	Delay Engine Stop	Presignal On	Delay to Emergency	Delay to Normal
Normal Position	●	●								
W Time Delay	●	○		●					●	
Open Position/ TA6 Time Delay		○		●		●		●		
Emergency Position		○	●	●						
T Time Delay		●	●	●						●
Open Position/ TA5 Time Delay		●		●	●			●		
Normal Position/ Engine Overrun Timer	●	●		●			●			

○ Illuminated only when running TEST, not on Normal power failure

The MX100 continuously monitors source voltage. In the event that Normal voltage falls below a preset drop-out value, the unit will perform in exactly the same way as noted in the test procedure (either standard transition or delayed transition).

Katolight Service - Master Repair Manual - Page 4293

Operation Sequence

Normal Power Failure. When Normal voltage has fallen below the preset dropout value, the engine start (P) timer begins its timing cycle (factory set 3 seconds). The P timer allows for momentary undervoltage conditions in the Normal source without triggering the generator to start. If the Normal voltage remains below the dropout point throughout the P timing cycle, a generator start signal will be sent. The MX100 then monitors generator voltage and frequency to determine if they are within preset parameters. When the generator voltage and frequency reach acceptable limits the W timer begins its timing cycle. The W timer governs either the time delay for transfer to Emergency or to the open position (standard or delayed transition, respectively). The W timer (typically 1 second) assures that the generator voltage and frequency are stable before transfer.

The transfer to Emergency sequence is then completed as follows:

Standard Transition—after the W time delay, the ATS transfers to Emergency position and load power is supplied by the generator.

Delayed Transition—following the W time delay, the switch opens out of Normal to the Open position. The DW timer is activated. The DW time delay is typically set to 5 seconds. After the DW time delay, the switch completes transfer to Emergency.

Standard Transition w/A6 or T3/W3—following the W time delay, the presignal is initiated. The TA6 timer is started. The TA6 time delay is typically set to 5 seconds. After the TA6, the ATS transfers to Emergency.

Restoration of Normal Power. When Normal power reaches the preset pickup value, the T timer begins its timing cycle (factory set 30 minutes). The T timer is used to ensure that the Normal source has fully restored before retransfer. If Normal voltage remains above the pickup values for the duration of the T timer, transfer to Normal position is performed. Retransfer is accomplished as follows:

Standard Transition—ATS transfers to the Normal position and the load power is supplied by utility.

Delayed Transition—the switch opens out of Emergency to the Open position. The DT timer activates, typically set to 5 seconds. After the DT time delay, the switch completes transfer to Normal.

Standard Transition w/A6 or T3/W3—following the T time delay, the presignal is initiated. The TA5 timer is started. The TA5 time delay is typically set to 5 seconds. After the TA5, the ATS transfers to Normal.

The U timer then times out (factory set 5 minutes) to allow the generator to run unloaded for a cooldown period.

Katolight Service - Master Repair Manual - Page 4294

Control Features and Options

Control Features

A6. Motor load disconnect capability (standard transition only). Ensures that closing into the oncoming source does not create a large disturbance due to phase angle difference between the load and the oncoming source. Motor loads can be disconnected for an adjustable period of 0-60 seconds prior to transfer of the main contacts. This feature includes LEDs to indicate when the motor load is disconnected.

CDT Exerciser. A built in 7 day exerciser timer is incorporated into the MX100, (standard feature, all models). Pressing the initiate switch will start a timer that will continue for 167 hours and 40 minutes. Along with initiating the timer, an LED will illuminate to indicate that the timer has been started. After 167 hours and 40 minutes, a load test (ATS transfers to Emergency) or a no load test (ATS signals the genset to start but does not transfer) occurs. The exercise mode is determined by the MX100 PCboard jumper location (TSL = load, TSNL = no load). The test lasts for 20 minutes. The CDT Exerciser LED will flash when the exercising is in progress. This 20 minute exercise does not include the time delay to retransfer to normal (T timer) when the ATS is transferred (load test) or the time delay engine stop (U timer) for either load or no load tests. Disabling the exercise event is done by pressing the disable/enable switch. When this is done the exercise event will not occur, although the timer will not be affected. The CDT Exerciser LED will turn off when the disable/enable switch is pressed for the first time after initiating the timer. Pressing the disable/enable switch again will re-enable the exercise event while turning the CDT Exerciser LED back on. The time of the exercise event can be changed by re-initiating the event. The time that the button is pressed will be the end of the exercise event one week later.

CDT Exerciser Notes

1. To avoid unintentional intiating/disabling the button should be held down for 3 seconds when pressed.
2. A 9V battery is supplied to prevent CDT exercise timer from losing it's "set exercise time" in the event of an extended power outage. The battery can back up the processor for up to 8 hours. The battery should be replaced if it has supplied power to the microprocessor for an extended outage.
3. The 9V battery cannot be plugged into a PCboard that is deenergized. The PCboard includes large capacitors that the battery will not be able to charge. If the capacitors are charged, the battery will still discharge eventually due to the load of the PCboard. Therefore, do not install a battery until the PCboard is energized. The battery will then be able to maintain the CDT "set exercise time" in the event of an extended outage.

R50. In-phase monitor (standard transition w/o A6 only). R50 ensures that the phase angle difference between the load voltage and the oncoming source voltage is minimal (live source-to source transfers). The feature requires a fast acting transfer switch, therefore is only available with a standard transition ATS. The in-phase monitor is suitable for isochronous through 3% droop governors. The microprocessor anticipates the synchronized condition

Katolight Service - Master Repair Manual - Page 4295

by monitoring the phase angle and frequency differential between the sources. Then it signals a transfer at the precise moment to ensure minimal phase difference between the sources at the completion of transfer. R50 also includes a PCboard-mounted switch to override the in-phase monitor function if necessary. The override toggle switch is located below the MX100 cover, but the toggle position to enable or disable the function is clearly indicated on the cover.

YEN. Pushbutton time delay transfer/retransfer bypass.

Control Options

Five control input options can be used with the MX100:

- 6A
- C
- C/D
- Q2
- ZNET100

Note: Consult the factory when field adding Q2 option.

6A. *Maintained test switch.* An auxiliary two position maintained test switch is located on the cabinet door. This is in addition to the standard test switch found on all MX100 models. When the auxiliary test switch is activated in the TEST position, it will simulate a Normal line failure. The transfer switch will automatically transfer the load to the Emergency position. When the test switch is returned to the AUTOMATIC position the transfer switch will restore the load to the Normal position. Should Emergency fail while ATS is in Emergency position the ATS will transfer back to Normal immediately, if Normal is available.

C. *Plant Exerciser.* Automatically starts generator for selected time intervals. Runs generator unloaded.

C/D. *Plant Exerciser.* Automatically starts generator to run unloaded, or simulate a power failure and starts generator to run under load.

Q2. *Connections for remote peak shave or area protection.* Includes bypass for immediate return to Normal if Emergency line fails and Normal is available.

Z-NET100. *Communication Capability.* The MX100 can be equipped with an optional network card that allows digital communication of ATS position, source availability, control timers and test mode. A test signal can also be initiated from a remote PC or annunciator panel. Communication is via one twisted pair of wires.

Katolight Service - Master Repair Manual - Page 4296

User Settings

All user settings are adjustable on the back of the MX100 display. Figure 5 shows the MX100 user adjustments.

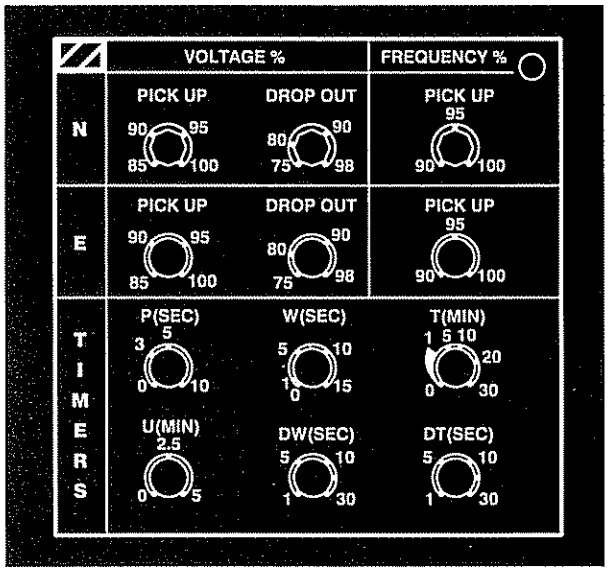

Figure 5 - Delayed Transition User Adjustments

⚠ NOTICE

All adjustments are factory preset to values in the table below, unless otherwise specified by the user.

Factory Settings of Voltage, Frequency and Timer Adjustments	
Normal Pickup Voltage	90% Nominal Line Voltage
Normal Dropout Voltage	80% Nominal Line Voltage
Normal Pickup Frequency	90% Nominal Line Frequency
Emergency Pickup Voltage	90% Nominal Line Voltage
Emergency Dropout Voltage	80% Nominal Line Voltage
Emergency Pickup Frequency	95% Nominal Line Frequency
P Timer	3 seconds
W Timer	1 second
T Timer	30 minutes
U Timer	5 minutes
DW Timer *	5 seconds
DT Timer *	5 seconds
TA5 **	5 seconds
TA6 **	5 seconds

* Delayed
** Standard w/A6 or T3/W3

Katolight Service - Master Repair Manual - Page 4297

Voltage and Frequency Pickup/Dropout Adjustments

Normal Pickup Voltage %: Pickup voltage is adjustable from 85 to 100% of nominal line voltage. Standard factory setting is 90%.

Normal Dropout Voltage %: The dropout voltage is adjustable from 75 to 98% of nominal line voltage. Standard factory setting is 80%. Dropout must be a minimum of 2% below Normal pickup voltage under all conditions. Note: The microprocessor will automatically set the Normal dropout voltage 2% below the Normal pickup voltage if it is not properly set by the user.

Normal Pickup Frequency %: The pickup frequency is adjustable from 90 to 100% of nominal line frequency. Standard factory setting is 90%.

Emergency Pickup Voltage %: The pickup voltage is adjustable 85 to 100% of nominal line voltage. The standard factory setting is 90%.

Emergency Dropout Voltage %: The dropout voltage is adjustable from 75 to 98% of nominal line voltage. Standard factory setting is 80%. Emergency dropout voltage must be a minimum of 2% below emergency pickup voltage under all conditions. Note: The microprocessor will automatically set the Emergency dropout voltage 2% below the Emergency pickup voltage if it is not properly set by the user.

Emergency Pickup Frequency %: The pickup frequency is adjustable from 90 to 100% of nominal line frequency. Dropout is fixed at 2 Hz below pickup. Dropout has a 5 second delay. Standard factory setting is 95%.

Timer Adjustments

P Timer (delay to engine start). Time delay before engine start after Normal voltage failure: adjustable 0 to 10 seconds. P timer is designed to avoid engine starts on momentary Normal source failures. Standard factory setting is 3 seconds.

W Timer (delay to Emergency or delay to open Normal timer). Time delay before initiating transfer to Emergency: adjustable 0 to 15 seconds. Standard factory setting is 1 second. After the successful acquisition of correct Emergency voltage and frequency, the W timer function provides a time delay before initiating transfer to Emergency. This permits the Emergency source to stabilize. On completion of the time out, transfer to Emergency is initiated.

Transfer to Emergency is non-commit. This means that should the Normal voltage be restored before the timeout of the W timer, the ATS will remain in the Normal position and initiate the delay to engine stop timer.

Katolight Service - Master Repair Manual - Page 4298

T Timer (delay to Normal or delay to open Emergency). Time delay before initiating retransfer to Normal: adjustable 0 to 30 minutes. Standard factory setting is 30 minutes. On return of acceptable Normal voltage the time delay is initiated. T time delay ensures Normal source has stabilized before transferring to Normal position. On completion of the time out, transfer to Normal is initiated. Should Emergency power fail when the ATS is in the Emergency position, the T timer function will be bypassed when normal power is restored.

U Timer (delay engine stop). Time delay to engine stop, after retransfer to Normal, for purpose of cooling the engine after the load is removed: adjustable 0 to 5 minutes. Standard factory setting is 5 minutes.

DW Timer (time delay from Open position to Emergency position). Delayed Transition Transfer only: adjustable 0 to 60 seconds. Standard factory setting is 5 seconds. DW timer activates when the switch enters open position on a transfer from Normal to Emergency. After time out, the transfer to Emergency is complete.

DT Timer (time delay from Open position to Normal position). Delayed Transition Transfer only: adjustable 0 to 60 seconds. Standard factory setting is 5 seconds. DT timer activates when the switch enters the open position on transfer from Emergency to Normal. After time out, the transfer to Normal is complete.

MX100, Standard Transition w/A6 or T3/W3
(A6 = motor load disconnect circuit)
(T3/W3 = elevator presignal circuit)

TA5 (presignal time delay to normal). Time delay is available only on standard transition ATSs specifically configured with the presignal circuit. Adjustable 0 to 60 seconds. Standard factory setting is 5 seconds.

TA6 (presignal time delay to emergency). Time delay is available only on standard transition ATSs specifically configured with the presignal circuit. Adjustable 0 to 60 seconds. Standard factory setting is 5 seconds.

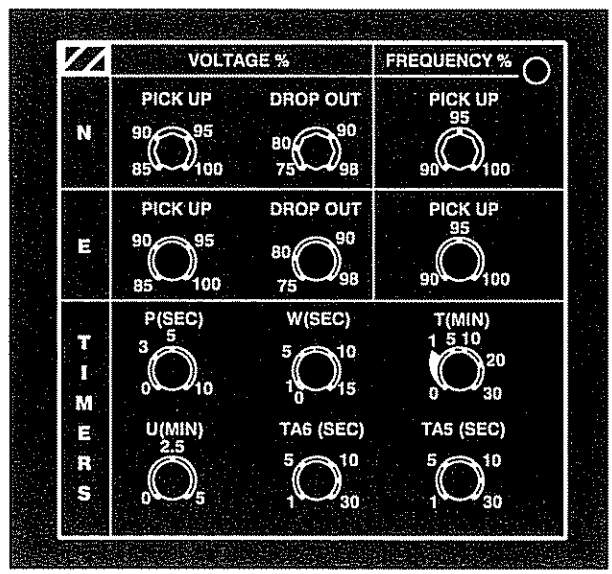

Figure 6 - Standard Transition w/A6 or T3/W3 User Adjustments

Katolight Service - Master Repair Manual - Page 4299

Relay/Transformer Box (R/T Box)

Each MX100 microprocessor based ATS controller requires a relay/transformer box to apply line voltage to the ATS operator via coil control relays. Also required is a means to power the MX100 printed circuit board and a means to apply sensing voltage proportional to line voltage. This is accomplished by the relay transformer box. This method of switching operator voltage and applying power and sensing voltage to the printed circuit board isolates the MX100 from the line voltage, further protecting the controller from harmful line transients. Two versions of the R/T box exist depending on the type of ATS (standard transition or delayed transition).

The following layout drawings of the R/T box components (standard and delayed transition) include a bill of materials for replacement parts. Schematics are included to indicate proper wiring.

Standard Transition

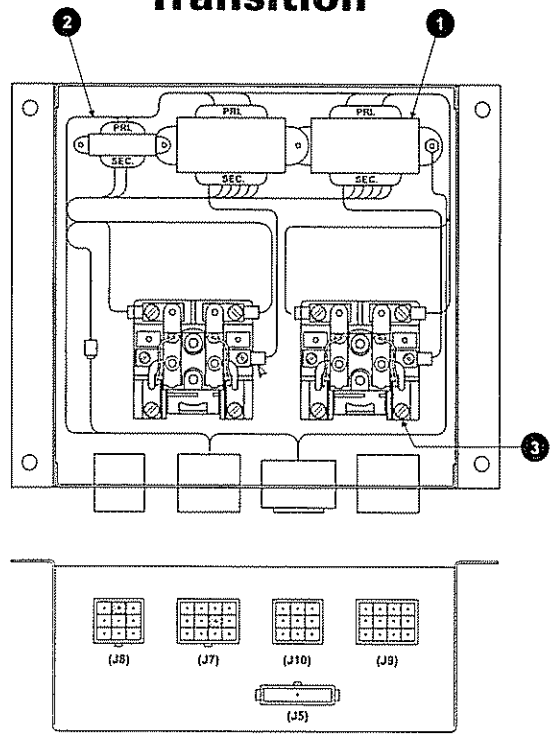

Bill of Material

Item	Part No.	Description	Qty
1	See Chart	Transformer, 25VA	2
2	See Chart	Transformer, 1VA	1
3	K-1260	Coil Control Relay, 24V	2

Transformer Usage

R/T Box Assembly Part No.	Primary Voltage at 50/60 Hz	1VA XFMR Part No.	25VA XFMR Part No.
50P-1005	120V	K-3216	K-3224
50P-1006	208-220V	K-3217	K-3225
50P-1007	230-240V	K-3218	K-3226
50P-1008	277V	K-3219	K-3227
50P-1009	380-400V	K-3220	K-3228
50P-1010	416-440V	K-3221	K-3229
50P-1011	460-480V	K-3222	K-3230
50P-1012	575-600V	K-3223	K-3231

Katolight Service - Master Repair Manual - Page 4300

Relay/Transformer Box (R/T Box) *(cont'd)*

Delayed Transition

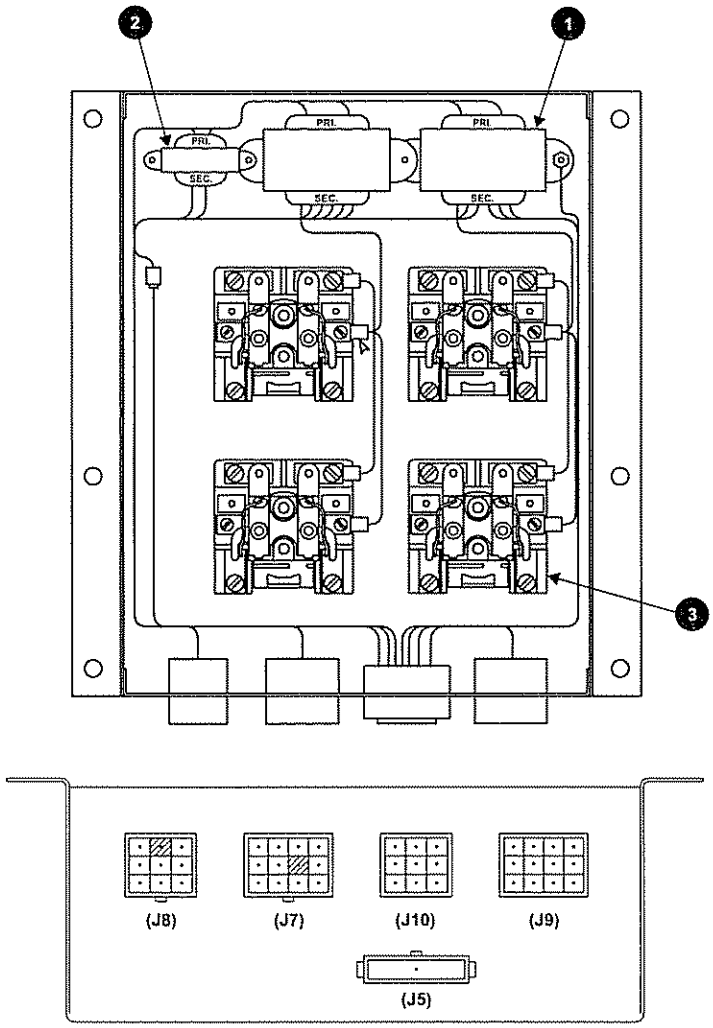

Bill of Material

Item	Part No.	Description	Qty
1	See Chart	Transformer, 25VA	2
2	See Chart	Transformer, 1VA	1
3	K-1260	Coil Control Relay, 24V	4

Transformer Usage

R/T Box Assembly Part No.	Primary Voltage at 50/60 Hz	1VA XFMR Part No.	25VA XFMR Part No.
50P-1013	120V	K-3216	K-3224
50P-1014	208-220V	K-3217	K-3225
50P-1015	230-240V	K-3218	K-3226
50P-1016	277V	K-3219	K-3227
50P-1017	380-400V	K-3220	K-3228
50P-1018	416-440V	K-3221	K-3229
50P-1019	460-480V	K-3222	K-3230
50P-1020	575-600V	K-3223	K-3231

Katolight Service - Master Repair Manual - Page 4301

Standard Transition R/T Box Schematic

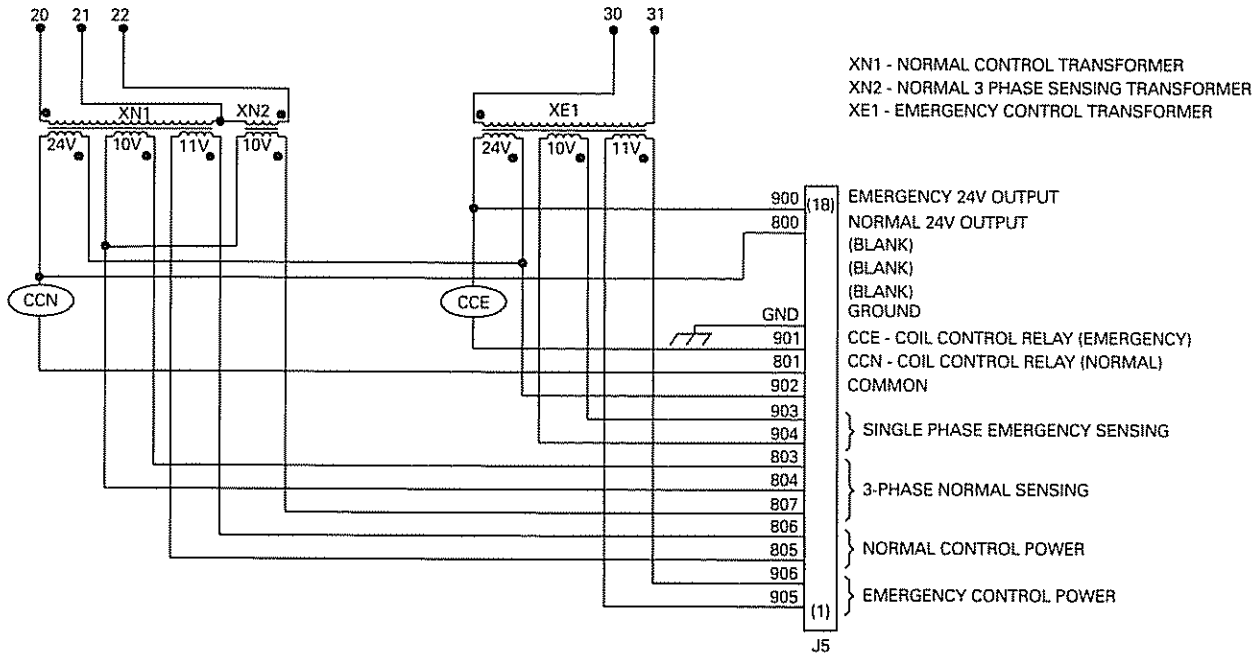

Delayed Transition R/T Box Schematic

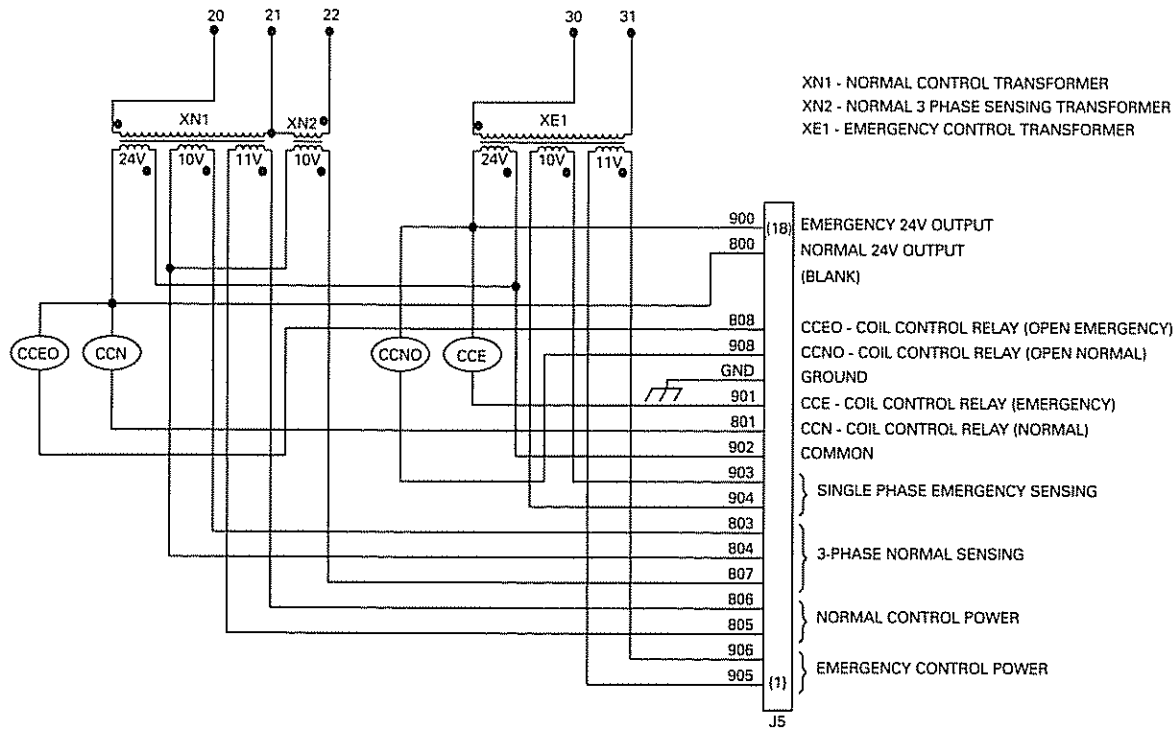

Katolight Service - Master Repair Manual - Page 4302

Troubleshooting and Diagnostics

⚠ DANGER

HAZARDOUS VOLTAGES CAN CAUSE SEVERE INJURY OR DEATH.
These charts may indicate problems that require authorized Zenith service personnel.
Hazardous voltages may exist on termination plugs other than those that go into the MX100.

General Troubleshooting

The following chart can be used to troubleshoot the ATS system. Diagnostics are indicated by one or more flashing position LED(s). Diagnostic troubleshooting charts follow this chart.

Symptom	Annunciation	Possible Cause(s)	Corrective Action
No engine start	EMERGENCY AVAILABLE LED off	Engine start wires not properly connected	Check engine start connections (Figure 1)
		Generator in OFF position	Place engine control switch in AUTO
No engine stop	DELAY TO ENGINE STOP LED on	U timing cycle not complete	Check U timer setting
	NORMAL AVAILABLE, NORMAL POSITION, and EMERGENCY AVAILABLE LEDs on	Engine start wires not properly connected	Check engine start connections (Figure 1)
		Generator in MANUAL	Place engine control switch in AUTO
ATS will not transfer to EMERGENCY	EMERGENCY AVAILABLE LED off	Emergency voltage or frequency not within settings	Check: engine start connections, generator breaker closed, generator output (compare to MX100 settings) and place engine control switch in AUTO
	All LEDs off	Power supply harness unplugged (18 pin connector on MX100)	Plug in harness
	EMERGENCY AVAILABLE LED on	ZTC models only - verify zero volts DC from pin 5 to pin 6 of 6 pin plug on MX100	If 5V measured, ZTC is tripped; refer to Power Panel Manual (51R-1000) for ZTC instructions
ATS will not transfer to NORMAL	NORMAL AVAILABLE LED off	Normal voltage or frequency not within acceptable parameters	Check: normal voltage within MX100 settings; verify Normal breaker source breaker is closed
	All LEDs off	Power supply harness unplugged (18 pin connector on MX100)	Plug in harness
	NORMAL AVAILABLE LED on	ZTC models only - verify zero volts DC from pin 5 to pin 6 of 6 pin plug on MX100	If 5V measured, ZTC is tripped; refer to Power Panel Manual (51R-1000) for ZTC instructions
Improper LED annunciation	Neither source available LEDs illuminate, position LED only	MX100 PC board may be configured for wrong frequency (60 Hz vs. 50 Hz)	1. Verify source voltage and frequency 2. Consult Zenith Controls for information to reconfigure hardware
	NORMAL and/or EMERGENCY AVAILABLE LEDs on when frequency is below the present pick up value	MX100 PC board may be configured for wrong frequency (60 Hz vs. 50 Hz)	1. Verify source voltage and frequency 2. Consult Zenith Controls for information to reconfigure hardware

Katolight Service - Master Repair Manual - Page 4303

Diagnostic Annunciation

The MX100 controller incorporates diagnostics that allows ease of troubleshooting. Diagnostic annunciations are flashing position LEDs. The symptoms that the diagnostic annunciation indicate include inhibiting transfer or incorrect transfer sequence. A more general troubleshooting chart that addresses system problems precedes these charts.

⚠ DANGER

HAZARDOUS VOLTAGES CAN CAUSE SEVERE INJURY OR DEATH.

These charts may indicate problems that require authorized Zenith service personnel.

Hazardous voltages may exist on termination plugs other than those that go into the MX100.

Standard Transition ATS

(Two Position ATS—Normal and Emergency)
(Not for Standard Transition w/A6)

⚠ WARNING

If limit switch plug is disconnected or reconnected and power is available, the switch may transfer.

Use caution when servicing.

Symptom	Annunciation	Possible Cause(s)	Corrective Action
ATS will not transfer out	Flashing NORMAL POSITION LED	Solenoid circuit	Contact authorized Zenith service representative
ATS will not transfer out	Flashing EMERGENCY POSITION LED	Solenoid circuit	Contact authorized Zenith service representative
ATS will not transfer; ATS is not in a defined position as indicated by the limit switch contact (no SN or SE limit switch input)	Flashing NORMAL POSITION and EMERGENCY POSITION LEDs	1. Limit switch plugs not connected 2. Limit switches not within adjustment	1. Connect all plugs to the MX100 2. Contact authorized Zenith service representative

Katolight Service - Master Repair Manual - Page 4304

Delayed Transition ATS (Three Position ATS—Normal, Open and Emergency)

⚠ WARNING

If limit switch plug is disconnected or reconnected and power is available, the switch may transfer.

Use caution when servicing.

Symptom	Annunciation	Possible Cause(s)	Corrective Action
ATS will not transfer out of Normal	Flashing NORMAL POSITION LED	1. ZTC in manual mode (ZTC models only) 2. Solenoid circuit	1. Put ZTC in AUTO (ref. ZTC Power Panel Manual 51R-1000) disconnect and reconnect MX100 18 pin plug 2. Contact authorized Zenith
ATS will not transfer out of Emergency	Flashing EMERGENCY POSITION LED	1. ZTC in manual mode (ZTC models only) 2. Solenoid circuit	1. Put ZTC in AUTO (ref. ZTC Power Panel Manual 51R-1000) disconnect and reconnect MX100 18 pin plug 2. Contact authorized Zenith
ATS will not transfer out of Open position	Flashing OPEN POSITION LED	1. ZTC in manual mode (ZTC models only) 2. Solenoid circuit	1. Put ZTC in AUTO (ref. ZTC Power Panel Manual 51R-1000) disconnect and reconnect MX100 18 pin plug 2. Contact authorized Zenith
ATS is not in a defined position as indicated by the limit switch contacts (no SN or SNO limit	Flashing NORMAL POSITION and OPEN POSITION LEDs	Limit switches not registered as opened or closed	Contact authorized Zenith service representative
ATS is not in a defined position as indicated by the limit switch contacts (no SN or SEO limit switch	Flashing EMERGENCY POSITION and OPEN POSITION LEDs	Limit switches not registered as opened or closed	Contact authorized Zenith service representative
ATS is not in a defined position as indicated by the limit switch contacts (no SN, SE, SNO, or SEO	Flashing NORMAL POSITION, OPEN POSITION and EMERGENCY POSITION LEDs	1. Limit switch plugs not connected 2. Limit switches not registered as opened or closed	Connect all plugs to the MX100

Katolight Service - Master Repair Manual - Page 4305

Standard Transition ATS (with A6)

⚠ WARNING

If limit switch plug is disconnected or reconnected and power is available, the switch may transfer.

Use caution when servicing.

Symptom	Annunciation	Possible Cause(s)	Corrective Action
ATS will not transfer out of Normal; motor load still connected	Flashing NORMAL POSITION LED	Motor load disconnect relay is not latching	Check connections to RA6 relay
ATS will not transfer out of Emergency; motor load still connected	Flashing EMERGENCY POSITION LED	Motor load disconnect relay is latched	Check connections to RA6 relay
ATS will not transfer after motor load disconnect operated	Flashing MOTOR CONTROL OFF LED	Solenoid circuit	Contact authorized Zenith service representative
ATS is not in a defined position as indicated by the limit switch contacts (no SN or RA6 limit	Flashing NORMAL POSITION and MOTOR CONTROL OFF LEDs	Limit switches not registered as closed or RA6 contact is not registered	Contact authorized Zenith service representative
ATS is not in a defined position as indicated by the limit switch contacts (no SE or RA6 limit switch	Flashing EMERGENCY POSITION and MOTOR CONTROL OFF LEDs	Limit switches not registered as closed or RA6 contact is not registered	Contact authorized Zenith service representative
ATS is not in a defined position as indicated by the limit switch contacts (no SN, SE, SNO, or SEO	Flashing NORMAL POSITION, OPEN POSITION and EMERGENCY POSITION LEDs	1. Limit switch plugs not connected 2. Limit switches not registered as opened or closed	Connect all plugs to the MX100

Katolight Service - Master Repair Manual - Page 4306

ZENITH CONTROLS, INC.



830 West 40th Street
Chicago, IL 60609 USA

Phone: 773 247-6400
Fax: 773 247-7805

www.zenithcontrols.com
E-Mail: zenith@zenithcontrols.com

© 1999 Zenith Controls, Inc.

MX150 Microprocessor Controller
Transfer Switch Control Panel

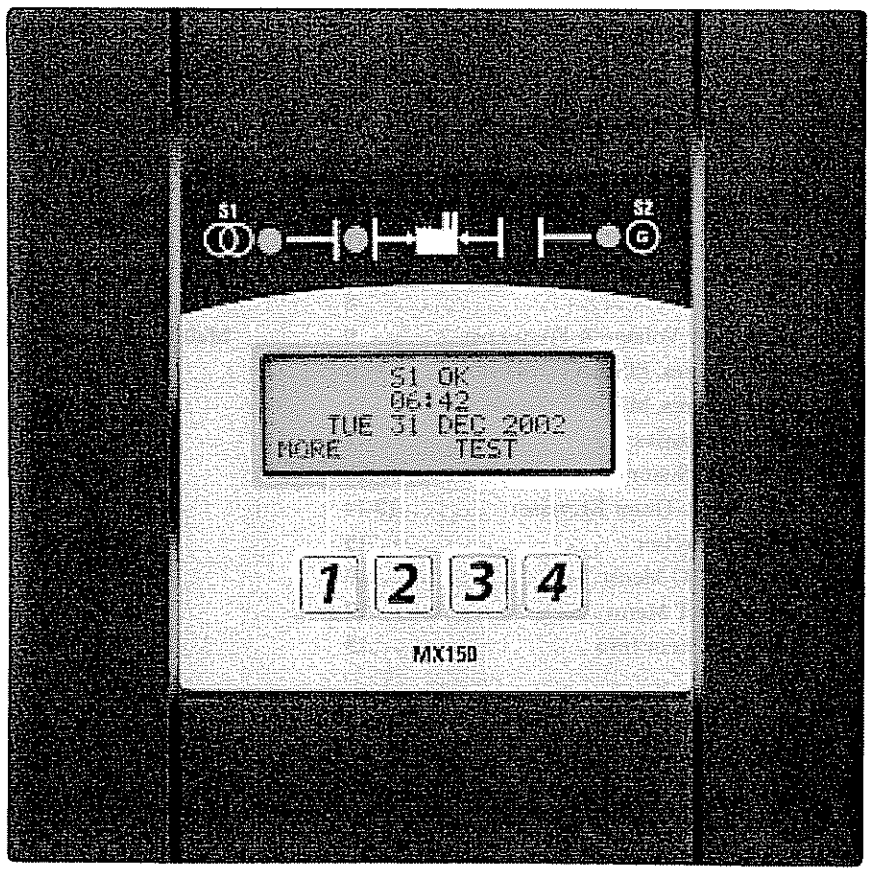

Katolight Service - Master Repair Manual - Page 4309

Authorized Service

For GE parts and service, call: (773) 299-6600

Table of Contents

	Page
Introduction	2
Safety	3
Equipment Inspection and Storage	3
Final Equipment Inspection	3
Installation	4
Engine Start Control Connections	4
Initial Energization	4-5
Control Connections	6
MX150 Microprocessor Controller	7
Overview	7
LCD & Keypad	8
User Setting for Voltage & Frequency	9
Standard Features, MSTDG Option Pkg.	9-10
Standard Features, MEXEG Option Pkg.	11
Optional Accessories	12
How to Set the System Clock	13
CDT One Event Timer Exerciser	13-14
CDP Clock Exerciser	15
User Setup - CFG Menu	16
User Setup - SET Menu	17
User Setup - System Info	18
Testing	19
Standard Transition	19
Delayed Transition	19
Sequence of Operation	20
Standard Transition	20
Delayed Transition	20
Relay/Transformer (R/T Box)	21
Standard	21
Delay	22
Schematics	23
Troubleshooting & Diagnostics	24
Maintenance and Testing	25
Inspection and Cleaning	25
Servicing	25
Testing	25

Introduction

GE Zenith Transfer Switches are used to provide a continuous source of power for lighting and other critical loads by automatically transferring from source 1 power to source 2 power in the event that source 1 voltage falls below preset limits.

Voltage sensing and system control is performed via a state-of-the-art microcontroller located on the cabinet door. It is designed to give highly accurate control of the transfer switch system.

All GE Zenith transfer switches are designed for use on emergency or standby systems, and are rated for total system or motor loads. Transfer switches are UL Listed under Standard 1008 and CSA Certified under Standard C22.2 No. 178 and IEC Listed under Standard 947.

NOTES: A protective device such as a molded case circuit breaker or fused disconnect switch MUST be installed on both sources of incoming power for circuit protection and as a disconnection device.

All references made within this manual about the term "S1" or "Source 1" relate to a Normal Power Source. All references made about the term "S2" or "Source 2" relate to an Emergency or Alternative Power Source.

⚠ DANGER ⚠

HAZARDOUS VOLTAGE
(Can Cause Severe Injury or Death)

Turn OFF all power before installation, adjustment, or removal of transfer switch or any of its components.

The safe operation of your switch is GE Zenith's focus. The proper storage, installation, operation and maintenance will help increase the life of the switch.

⚠ CAUTION ⚠

Due to hazardous voltage and current, GE Zenith recommends that a GE Zenith Certified technician or a qualified electrician must perform the installation and maintenance of the switch.

Equipment Inspection and Storage

Once you have received the transfer switch, inspect it for any damage. This includes damage to the enclosure, power panel, control panel and wiring harness. If any damage is found or suspected, file a claim as soon as possible with the carrier and notify the nearest GE Zenith representative.

Before installation, if it is necessary, store the transfer switch in a clean dry place, protected from dirt and water. Provide ample air circulation and heat, if necessary, to prevent condensation.

Storage Temperature	Operating Temperature (Ambient):	Humidity
-30°C to +75°C (-22°F to +167°F)	**40-400 AMP** *(molded shell)* -20°C to +65°C (-4°F to +149°F) **40-4000 AMP** *(all other frame and panel types)* -20°C to +60°C (-4°F to +140°F)	5% to 95% (non-condensing)

Final Equipment Inspection

Prior to energizing the transfer switch:

1. Remove any debris incurred, with a vacuum, due to shipment or installation.
2. Verify that all cabled connections are correct and that phase rotation of both sources match.
3. Check engine start connections.
4. Verify the correct connection of all control wires.
5. Check settings of all timers and adjust as necessary.
6. Adjust any optional accessories as required.
7. Check the lug torque values of the power connections.

   NOTE: Lug torque values are specified in the power panel manual.

8. Make sure that all covers and barriers are installed and properly fastened.

   NOTE: Power panels ship from GE Zenith in Source 1 Position.

⚠ WARNING ⚠

Do not use a blower since debris may become lodged in the electrical and mechanical components and cause damage.

Each GE Zenith transfer switch is factory wired and tested. A complete information package is furnished with each switch which includes:

a. Sequence of operation.
b. Description and operation of all accessories supplied.
c. Power panel connection diagram and schematic.
d. Description and identification of all customer field connections.

Installation of GE Zenith transfer switches includes:

a. Mounting the transfer switch cabinet.
b. Connection of Source 1, Source 2, and Load cables or bus bars.
c. Connection of external control circuits as required.

Katolight Service - Master Repair Manual - Page 4311

⚠ DANGER ⚠

HAZARDOUS VOLTAGE
(Can Cause Severe Injury or Death)

Turn OFF all power before installation, adjustment, or removal of transfer switch or any of its components.

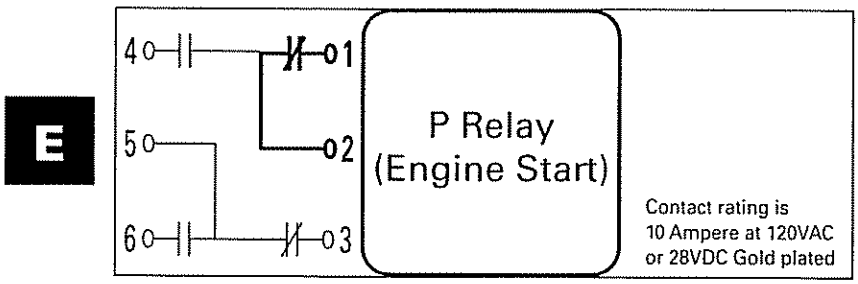

Figure 3

Engine Start Control Connections

The engine-start terminals are clearly identified by a label on the microcontroller backplate. In the case of manual transfer switches, or in other applications not requiring the microprocessor, clearly marked terminal blocks are provided in the upper left corner of the control panel for the engine start control wires.

Terminals for field connections to the A3 Emergency auxiliary contacts and the A4 Normal auxiliary contacts are also provided. These terminals are clearly marked and appear on the side of the power panel. On 400 amp metal frame units these terminals appear on the bracket above the operator handle.

Initial Energization

Before proceeding, refer to the information package supplied with the ATS and read and understand the information on all accessories provided.

1. Unlock the enclosure.
2. Open the enclosure.
3. Verify the correct system voltage.

   NOTE: The equipment rating nameplate on the transfer switch lists the voltage. See *Figure 3.*

4. Close Source 1 circuit. breaker.

   NOTE: The controller will illuminate Source 1 Available LED if proper voltage is sensed.

5. Verify the phase to phase voltages at the Normal line terminals.
6. Close the Emergency source circuit breaker.
7. Start the generator's engine.

   NOTE: The controller will illuminate Source 2 Available LED when preset voltage and frequency levels are reached.

8. Verify the phase to phase voltages at Source 1 line terminals.
9. Verify that the phase rotation of Source 1 is the same as the phase rotation of Source 2.



10. Shut down the generator's engine.
11. Place the starting control in the Automatic position.
12. Complete the visual inspection of the transfer switch.
13. Close the enclosure.
14. Lock the enclosure.

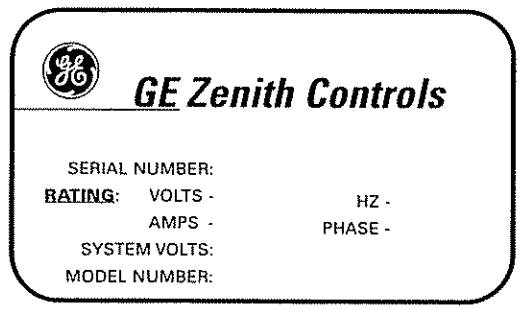

Figure 4

⚠ CAUTIONS ⚠

Certain accessories, per specific schematics, can inhibit automatic transfer. Engine Gen-Set could start when engine control wires are attached.

Katolight Service - Master Repair Manual - Page 4312

Initial Energization *(cont'd)*

After all options and accessories are checked and verified, follow these steps to set up the ATS. Refer to MX150 display *Figure 5*. The annunciation LEDs illuminate to indicate (1) source availability, (2) ATS position, and (3) MX150 control function (timing).

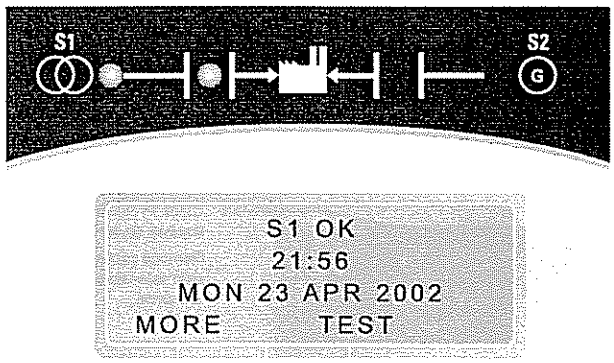

Figure 5 – LCD and keypad

1. Unlock the enclosure.
2. Open the enclosure.
3. Place the Disconnect Switch in the Inhibit.

   NOTE: This step is only performed if the "DS" Option was purchased.

4. Close the external (up-stream) Source 1 circuit breaker.

   NOTES: Source 1 Available and Source 1 Position LED's will illuminate.

   If Source 1 Available LED does not illuminate, verify that Source 1 Voltage is above the preset restore value.

   The Gen-Set will start and run while Source 2 stop Delay Timer is timing.

5. Close the External (up-stream) Source 2 line circuit breaker.
6. Start the engine generator in MANUAL mode.

   NOTE: When the voltage and frequency reach preset values, the Source 2 Available LED will illuminate.

7. Verify the phase to phase voltages at Source 2 line terminals.
8. Verify that the phase rotation of Source 2 is the same as the phase rotation of Source 1.
9. Shut down the generator's engine. (Place in Automatic Mode.)



   NOTE: Source 2 Available LED will turn off.

   NOTE: The engine generator will continue to run for the duration of Source 2 Stop Delay Timer.

10. Place the disconnect switch to ENABLE.
11. Complete the visual inspection of the transfer switch.
12. Close the enclosure.
13. Lock the enclosure.

⚠ WARNING ⚠

When performing a hi-pot or dielectric test on the power section, DISCONNECT the control panel plugs from the microprocessor to avoid potential damage.

Katolight Service - Master Repair Manual - Page 4313

⚠ DANGER ⚠

HAZARDOUS VOLTAGE
(Can Cause Severe Injury or Death)

Turn OFF all power before installation, adjustment, or removal of transfer switch or any of its components.

Control Connections

Figure 2

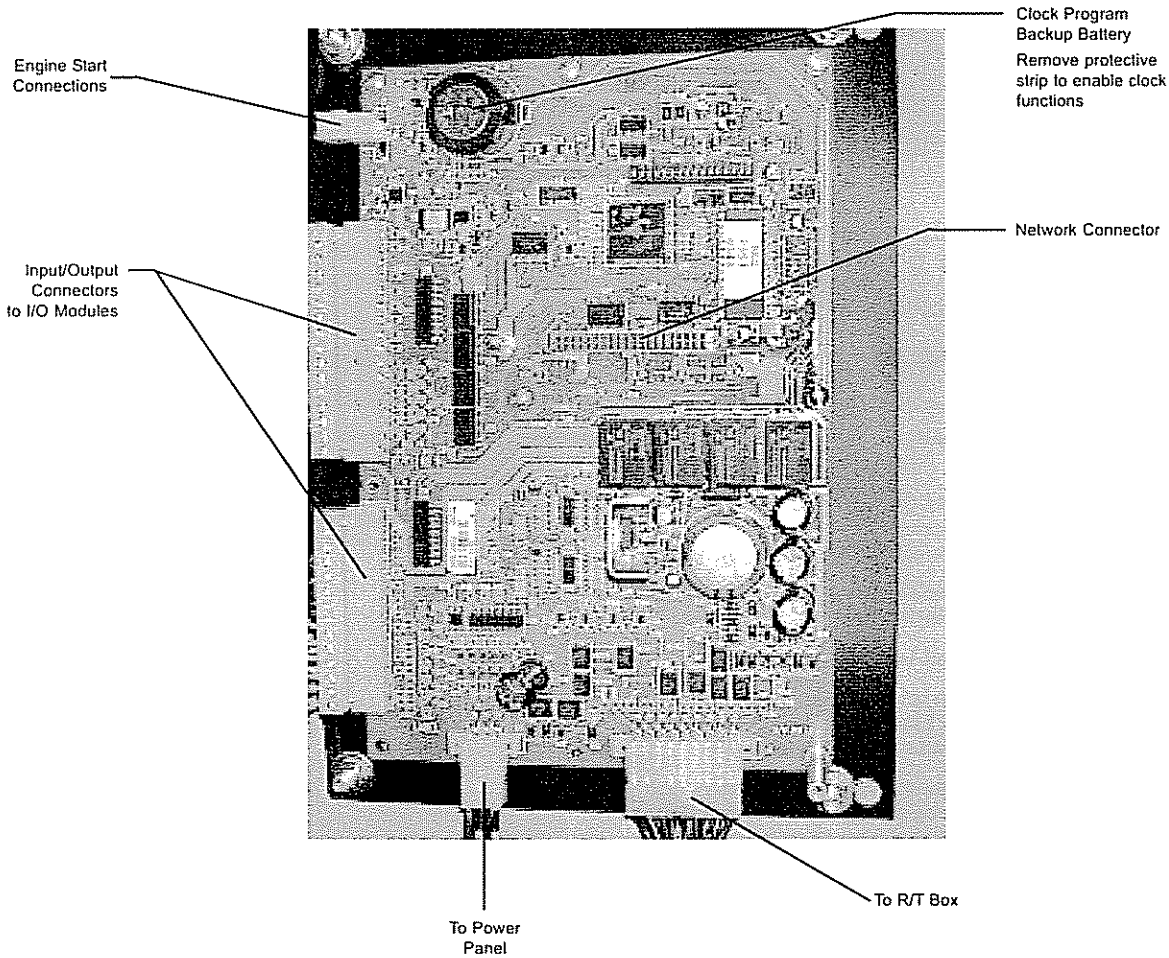

A complete information package is furnished with each transfer switch including a complete connection diagram and schematic which details all necessary control circuit field connections.

The engine start control wires connect to the engine start relay terminals located to the left of the microprocessor. Figure 2 shows the location of these terminals.

The terminals are clearly identified by a label on the microcontroller backplate. In the case of manual transfer switches, or in other applications not requiring the microprocessor, clearly marked terminal blocks are provided in the upper left corner of the control panel for the engine start control wires.

Katolight Service - Master Repair Manual - Page 4314

MX150 Controller

Consists of two major assemblies:

I. The **Microprocessor** contains the following:

A. MX150 Board - Customer Input and Output (I/O) for system interface. Located on the left hand side of the back of the unit (see figure 6)
1. I/O accessories that can be found here are:
a. Engine start relay P output
b. Pre-Signal to transfer T3, W3 and UMD output (optional)
c. Transfer Inhibit Q3 and Q7 input (optional)
d. Remote test Q2 input (optional)
e. Network interface ZNET input/output (optional)

B. LCD and Keypad located on the exterior of the door (see figure 7)
1. User accessibility to the following:
a. LED indication of source availability
b. LED indication of transfer switch position
c. LCD screen indicates:
(1) timer count down (numeric)
(2) event reporting (text)
d. Keypad provides user interface to: *[in conjunction with LCD screen]*
(1) Setting sensors and timers
(2) Configuring logic accessories

II. The **R/T box** (relay transformer box) contains the following: (see figure 6)

A. Relays which are required for controller output to energize the transferring mechanism of the transfer switch at line voltage.

B. Transformers which drop line voltage to control level for controller input.

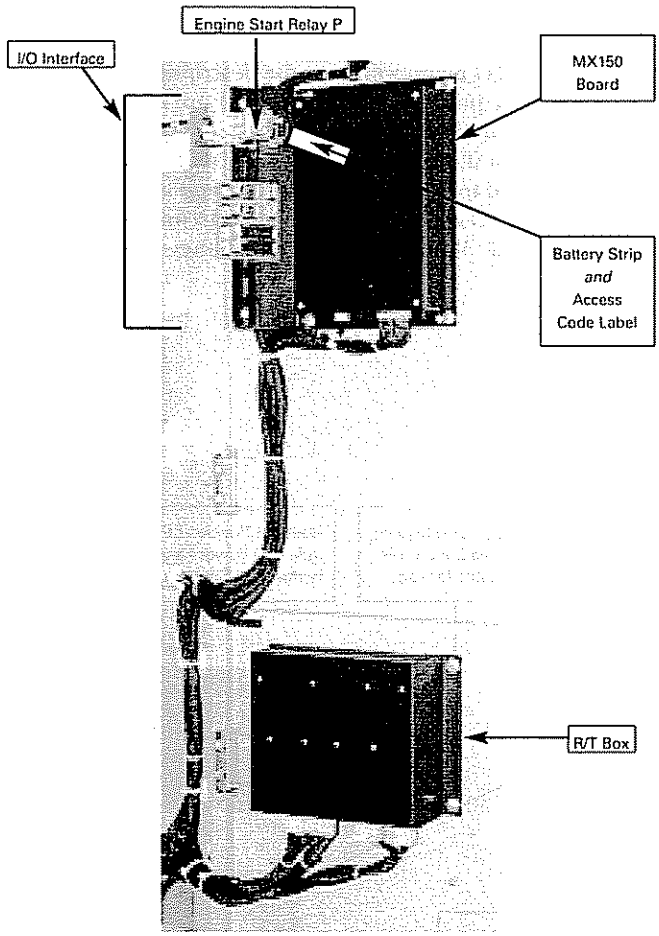

Figure 6

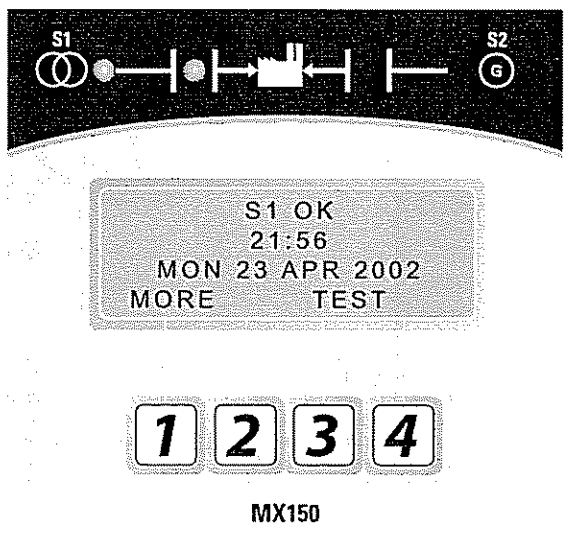

Figure 7

Katolight Service - Master Repair Manual - Page 4315

LCD & Keypad

These options are accessible through the LCD and keypad (see figure below). To become familiar with the options loaded into a particular unit, scrolling through the SET and CFG menu will show the descriptions of the options (see pages 16). These menus are the very same menus that are used to access the setting and/or configuration of these options. The SET (setting) menu is primarily used to show or change, time and voltage settings. The CFG menu is primarily used to turn an option on or off. When scrolling through these menus, no changes can be made without entry of the access code. The factory set six-digit access code is located on a white label on the back of the unit (see figure 9 pgs. 16-18).

The MX150 has many logic options. Each controller is downloaded with options at the time of manufacture. The collection of options that any one controller has is specified at the time of order placement. The following pages include all the options that can reside in the controller. Not all units include all options.

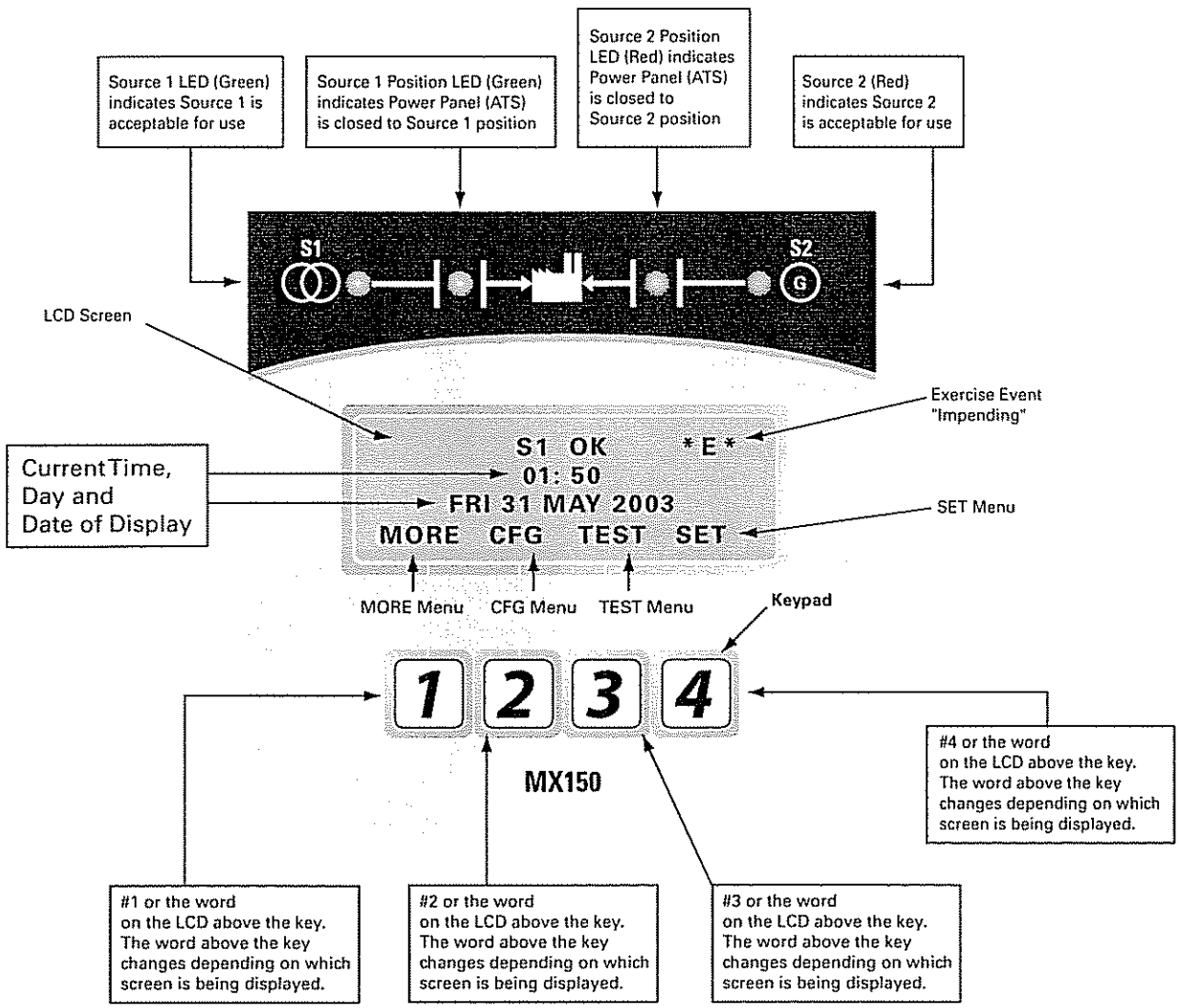

Figure 8

Katolight Service - Master Repair Manual - Page 4316

User Setting for Voltage & Frequency

Source 1

Voltage "Restore"
Factory Default: 90%
This adjustment determines the minimum acceptable voltage required to transfer to Source 1.
Adjust via the SET menu. Range is 85% to 100% in 1% increments (see page 17).
Once satisfied, the T timer will begin timing to transfer to Source 1.

Voltage "Fail"
Factory Default: 80%
This adjustment determines the low voltage threshold.
Adjust via the SET menu. Range is 75% to 98% in 1% increments (see page 17).
"Fail" must be a minimum of 2 % below "Restore" setting. Once voltage falls below threshold, P timer begins timing to signal Source 2 Generator to start.

Source 2

Voltage "Restore"
Factory Default: 90%
This adjustment determines the minimum acceptable voltage required to transfer to Source 2.
Adjust via the SET menu. Range is 85% to 100% in 1% increments (see page 17).
Once satisfied, the W timer will begin timing to transfer to Source 2.

Voltage "Fail"
Factory Default: 80%
This adjustment determines the low voltage threshold.
Adjust via the SET menu. Range is 75% to 98% in 1% increments (see page 17).
"Fail" must be a minimum of 2 % below "Restore" setting. Once voltage falls below threshold, T timer will be bypassed to expedite the transfer to Source 1.

Frequency "Restore"
Factory Default: 95%
This adjustment determines the minimum acceptable frequency required to transfer to Source 2.
Adjust via the SET menu. Range is 90% to 100% in 1% increments (see page 17).
Once satisfied, the W timer will begin timing to transfer to Source 2.

Frequency "Fail"
Factory Default: 90%
This adjustment determines the low frequency threshold.
Adjust via the SET menu. Range is 88% to 98% in 1% increments (see page 17).
"Fail" must be a minimum of 2 % below "Restore" setting.
Once satisfied, the W timer will begin timing to transfer to Source 2.

Standard Features, MSTDG Option Pkg.

6
Test Switch, Momentary

A3
Auxiliary Contact: Closed when the switch is in Source 2 position.

A4
Auxiliary Contact: Closed when the switch is in Source 1 position.

Calibrate
While monitoring the actual Phase to Phase voltage levels and Frequency with a calibrated test equipment, the Phase to Phase voltage sensing and Frequency can be adjusted accordingly. Calibration capabilities are available for Frequency and AB, BC, CA Phase to Phase voltage for both Sources. Adjust via SET menu (see page 18)

CDT
Load or NO-Load. One event exerciser with adjustable Engine exercise timer. Exercise duration can be set between 5 and 60 minutes in 1 minute increments. Can be configured to run every 1, 7, 14, or 28 days. Factory Default is 20minutes. When exerciser is impending, (*E*) appears in the upper right hand corner of LCD screen. See page 13-14 for instructions. Configured via CFG (see page 16). Set via SET menu (see page 17).

DS
Disconnect Switch, Auto/Inhibit.
Inhibits transfer in either direction when in inhibit.
Allows automatic operation when in Auto.
(800-4000 Amp units)

DT *(Delayed Transition Only)*
Time Delay from Neutral Switch position to Source 1 position. Adjustable 0-10 minutes in 1 second increments. Standard setting is 5 seconds Adjust via SET menu (see page 17)

DW *(Delayed Transition Only)*
Time Delay from Neutral Switch position to Source 2 position. Adjustable 0-10 minutes in 1 second increments. Standard setting is 5 seconds.Adjust via SET menu (see page 17)

E
Engine Start Contact

Katolight Service - Master Repair Manual - Page 4317

EL/P

Event Log: Sequentially Numbered Log of 16 events that track date, time, reason and action taken

System Data: Total Life Transfers (N2P)
Days Powered Up
Total Transfers to S2
Total S1 Failures
Time S1 available in Hrs
Time S2 available in Hrs. (N1P)

K/P

Frequency Indication for S1 and S2

L

LNP Center-off position LCD-Indicator
Indicating LED lights:

- **L1** Indicates Switch in Source 2 position.
- **L2** Indicates Switch in Source 1 position.
- **L3** Indicates Source 1 available.
- **L4** Indicates Source 2 available.

P1

Time Delay Source 2 Start. Adjustable 0-10 seconds. Standard setting is 3 seconds.
Adjust via SET menu (see page 17)

Q2

Peak Shave / Remote Load Test: Input for Peak Shave or Remote Load Test. Includes automatic return to Source 1 if Source 2 fails and Source 1 present.

R2E

Under voltage sensing of Source 2 for single-phase. (R17 replaces R2E for Utility to Utility switches)

R50

In Phase Monitor this feature restricts **Live to Live Source Transfers** to occur unless both Sources are within 7 electrical degrees or less of each other. (live Source to live Source transfers usually occur during transfer back to Source 1 or during Testing). R50 does not change the operation of the Automatic Transfer Switch in a power failure mode. After all timer functions have elapsed, **the CHECKING FOR SOURCE SYNCHRONISM** will be displayed as well as the direction of transfer (S1-S2 for example denotes transfer from Source 1 to Source2). When synchronism is accomplished, transfer will take place.

Notes:
- **If S2 Frequency is less than S1 Frequency, display will show a series of (-----.....) symbols.**
- **If S2 Frequency is greater than S1 Frequency, display will show a series of (+++++.....) symbols.**
- **Each (-) or (+) symbol represents 10 electrical degrees out of phase. A maximum of 18 symbols (180 electrical degrees) can be monitored.**
- **The number of (-) or (+) symbols decrease as the two sources approach synchronism and increase as the two sources drift out of synchronism.**
- **If S1 and S2 Frequencies are identical, the display will show a series of alternating symbols (++++...) which also indicate the approximate out of phase degrees**

In the event that the Sources do not come within 7 electrical degrees of each other within 60 seconds, the unit will display the message: **SYNCH CHECKING** and will allow the user to **BYPASS**. If the **BYPASS** button is pressed, the unit will display the message: **WARNING MAY CAUSE DAMAGE TO THE LOAD**. Pressing **XFR** will actually bypass the R50. Since R50 is a passive device, the length of time it takes to reach Synchronism is dependent on the frequency difference between the two Sources. Source 1 is usually a Utility and the frequency is not within the control of the consumer. Source 2 needs to be adjusted to create an adequate difference in order for the transfer to happen a timely fashion.

Note: For optimum performance, Source 2 Generator should be adjusted a Maximum of 2 Hertz above or below the Utility frequency, minimum of 0.1 Hertz. (58 to 59.9) or (60.1 to 62) Hertz. Adjustment of Generator to 60Hertz could cause lengthy transfer delay.

R50 Feature can be turned ON or OFF via CFG Menu (see page 16). Factory Default if OFF.

S13

Transfer Commit. Configured via CFG menu. (see page 16) When this Feature is set to OFF: The transfer Switch is not committed to transfer unless the outage duration is longer than the timers that precede the transfer to Source 2 position. This assumes that the outage will be an isolated event. When this Feature is set to ON: The transfer Switch is committed to transfer to Source 2 position once the W timer has begun timing, even if Source 1 power returns before the transfer to Source 2. This is to ensure that the transfer takes place, because one outage may be followed by another.

T

Time Delay (S1) Source 1 Stable Timer. To delay transfer to Source 1 (immediate retransfer on Source 2 failure). Adjustable 0-60 minutes in 1 second increments. Standard setting is 30 minutes. Adjust via SET menu (see page 17)

U

(S2) Source 2 Stop Delay Timer. Allows Engine to run unloaded after switch retransfer to Source 1. Adjustable 0-60 minutes in 1 second increments. Standard setting is 5 minutes. Adjust via SET menu (see page 17)

W

Time Delay (S2) Source 2 Stable Timer. To delay transfer to Source 2. Adjustable 0-5 minutes in 1 second increments. Standard setting is 1 second. Adjust via SET menu (see page 17)

YEN

Bypass Timers Key utilizing Keypad. When applicable, the system prompts the user to press a button to bypass (T) or (W) Timers should the user so desires.

Katolight Service - Master Repair Manual - Page 4318

Standard Features, MEXEG Option Pkg.

In addition to the features listed under the MSTDG Option Package, this enhanced package includes the following features:

A3
Additional Auxiliary contact: closed when switch is in Source 2 position.

A4
Additional Auxiliary contact: Closed when the transfer switch is in Source 1 position.

CDP (replaces CDT)
Clock Exerciser Load/ No Load: Allows the Generator to start and run unloaded or to simulate a power failure, start Generator and run under load.
Can be configured by end user for 1, 7, 14, 28, 365 day cycle.

VI
Voltage Imbalance (Three Phase)
For a three phase source, this feature monitors phase voltage ratios based on a selected range within a selected time window. Should any phase fall below the selected lower window limit or exceed the selected higher window limit within the selected time frame, the controller initiates transfer to the other source.

Range: 5% to 20% of Nominal voltage,
10 to 30 seconds window, user adjustable.
Resolution: 1% Increments
Minimum Differential: 2% between "Fail" and "Restore" settings.
Factory default: 10% "Fail", 8% "Restore, 30 Seconds.
See CFG Menu page 16 to configure ON or OFF.
See SET Menu page 17 to set Percentage and time windows

Katolight Service - Master Repair Manual - Page 4319

Optional Accessories

6A
Test Switch, Maintained / Momentary

6AP
Test Switch, Maintained / Momentary, utilizing Keypad

A1
Auxiliary Contact, operates on Source 1 line failure.

A1E
Auxiliary Contact, operates on Source 2 line failure.

A3
Auxiliary Contacts: Closed when the transfer switch is in Source 2 position.

A4
Auxiliary Contacts: Closed when the transfer switch is in Source 1 position.

A62
Sequential Universal Motor Load Disconnect Circuit. Normally closed Auxiliary contacts for Motor Loads. Open 0-60 seconds prior to transfer, after transfer, or both in either direction then re-close in timed sequence after transfer.

CTAP
Alarm Panel on transfer to Source 2 with Silence button.

DS
Disconnect Switch, Auto/Inhibit.
Inhibits transfer in either direction when in inhibit.
Allows automatic operation when in Auto.
(40-600 Amp units)

HT
Heater and Thermostat.

Manual
Manual Transfer Switch transfers in either direction by depressing designated pushbuttons.

M80
Digital Power Meter with Display: Amps, Volts, and Frequency.

M82
Digital Meter w/Display of Amps, Watts, Volts, Frequency, KVA, KVAR, PF, etc.

M83A
Digital Meter w/Diplay of Amps, Watts, Volts, Frequency, KVA, KVAR, PF, etc. Plus THD capability w/Modbus.

T3/W3
Elevator Pre-Signal Auxiliary Contacts: Open 0-60 seconds prior to transfer to either direction, re-closes after transfer.

UMD
Universal Motor Load Disconnect Circuit: Auxiliary Contact opens 0-60 seconds prior to transfer in either direction, re-closes after transfer. Can be configured by end user for Pre-transfer, Post-transfer, or both.

VI
Voltage Imbalance (Three Phase)
For a three phase source, this feature monitors phase voltage ratios based on a selected range within a selected time window. Should any phase fall below the selected lower window limit or exceed the selected higher window limit within the selected time frame, the controller initiates transfer to the other source.

Range: 5% to 20% of Nominal voltage,
10 to 30 seconds window, user adjustable.
Resolution: 1% Increments
Minimum Differential: 2% between "Fail" and "Restore" settings.
Factory default: 10% "Fail", 8% "Restore, 30 Seconds.
See CFG Menu page 16 to configure ON or OFF.
See SET Menu page 17 to set Percentage and time windows

ZNET
Network Communications Interface Card

Katolight Service - Master Repair Manual - Page 4320

How to Set the System Clock

How to Set the System Clock

Set System Clock, time and date

- If the clock is not set, the display will show SET SYSTEM CLOCK on the second line of the S1 OK screen.
- The S1 OK screen will show time (hours and minutes) on the second line if the system clock has been set. (Date on third line)

Setting the System Clock

(Start from **S1 OK** screen)

1. Remove battery protective white plastic strip near **P** relay. *
2. Press **MORE** then press **SET**.
3. Press **MORE** and scroll to **SET SYSTEM CLOCK** using the **MORE** key.
4. Press **SEL**.
5. **ENTER ACCESS CODE** located on the white label on the back of the controller.
6. Press **SEL**.
7. Use the up and down keys to change the hour value.
8. Press **SAVE** (this will enter this value and move cursor to minutes).
9. Use the up and down keys to change the minutes.
10. Press **SAVE** (this will enter this value and move cursor to month).
11. Use the up and down key up to change the month.
12. Press **SAVE** (This will enter this value and complete the clock setting).
13. Use the up and down keys to change the date.
14. Press **SAVE** (this will enter this value and move cursor to year).
15. Use the up and down keys to change year.
16. Press **SAVE** (this will enter this value and compete the clock setting).
17. To edit settings, press **SEL** and repeat steps 6-16.
18. If the setting is satisfactory, press **MORE** (unit then returns to the **SET** menu then press **BACK**, then **ESC**.)

* Replacement battery part #K-4100
Battery will last 5 years and provides power to retain clock function only (Controller functions without battery).

CDT One Event Timer Exerciser

Load or No-Load

One event Exerciser with adjustable Timer. Exercise duration can be set between 5 and 60 minutes in 1 minute increments. Can be configured to run every 1,7,14, or 28 days. Factory default is 20 minutes.

How to CONFIGURE (CFG) and Set (SET) the Timer Exerciser

1. Beginning from the **S1 OK** screen, press **MORE** then **CFG**.
2. Press **MORE** to scroll to **CONFIG TIMER EXERCISER** screen.
3. The third line of the **CONFG TIMER EXERCISER** will show either **DAILY, WEEKLY, 14 DAY, 28 DAY,** or **OFF**.
4. If the third line of the **CONFG TIMER EXERCISER** shows **DAILY, WEEKLY, 14 DAY,** or **28 DAY** as desired, then proceed to step 10.
5. If the third line of the **CONFG TIMER EXERCISER** shows **OFF** or if another timer selection is desired, continue.
6. Press **SEL**.
7. Enter **ACCESS** code located on white label on the back of the controller.
8. Press **UP** or **DOWN** to select **DAILY, WEEKLY, 14 DAY,** or **28 DAY** as desired.
9. Press **SAVE**.
10. Press **MORE** to scroll to **CONFG TIMER EXERCISER (XFR)** or **(NO XFR)**.
11. Press Up or Down to select **XFR** (Load Transfer) or **NO XFR** (No Load Transfer).
12. Press **SAVE**.
13. Press **MORE** repeatedly to **BACK** then **S1 OK** screen.

Set (SET) the Exerciser:

14. Beginning from the **S1 OK** screen, press **MORE** then **SET**.
15. Press **MORE** repeatedly until **EXER S2 RUN TIME** screen.
16. Press **SEL**
17. Enter **ACCESS** code located on white label on the back of the controller.
18. Press **SEL**
19. Cursor is indicated as a line under character to be changed. Change values with up and down keys.
20. Press **SAVE** when complete.
21. Press **MORE** repeatedly until **SET USER SETUP** then press **BACK** then **ESC** to the **S1 OK** screen.

Katolight Service - Master Repair Manual - Page 4321

CDT One Event Timer Exerciser (cont'd)

How to Initiate CDT Exerciser and to start an exercise cycle every 1, 7, 14, or 28 days

From S1 screen

1) Press **TEST**
2) Press **MORE**
3) Press **START TEST TIMER** (to initiate Test).

- If the CDT Exerciser is Factory configured for a Load Exerciser, the Controller will immediately start a load exercise. The controller will start the generator, transfer the load to Source 2 and remain in Source 2 for the duration set for **EXER S2 RUN TIME** in the **SET** menu. The controller will retransfer the load back to Source 1 after the S1 stable timer has timed out and run the generator unloaded for the duration of the S2 stop delay timer (Engine Cool Down Timer).
- If the CDT Exerciser is Factory configured for a No-Load Exerciser, the Controller will immediately start a No-load exercise. The controller will start the generator and run it unloaded for the duration of the S2 stop delay timer (Engine Cool Down Timer).

Exercise will be repeated at the same time as initiated on every 1, 7, 14, or 28 days according to the selection made in the Configure **CFG** menu.

How to Bypass (Cancel) an exercise during an exercise cycle

1) Press **BPASS**
2) Allow the controller to complete the Engine cool down cycle

If the CDT Exerciser is Factory configured for a No-Load Exerciser Or allow the controller to complete retransfer to Source 1 If the CDT Exerciser is Factory configured for a Load Exerciser

How to Bypass the next exercise event and Keep the rest of scheduled events unchanged

1) Press Test
2) Press **MORE**
3) Press **BYPASS EXER**

To re-institute the next exercise event back, press **CANCL BPASS**

How to initiate a new exercise start time

1) Press **TEST**
2) Press **MORE**
3) Press **EXER CANCL**
4) Press **START TIMER TEST**

How to check the next exercise event

1) From **S1 OK** screen, press **MORE** three times.
2) The unit will display the **PLANT EXERCISER NEXT** event in **DAYS**, **HOURS**, and **MINUTES**
3) Press **ESC** to **S1 OK** Screen.

Notes:

- ***E*** appears in the upper right hand corner of LCD screen when exercise is impending.
- For Load Exerciser, actual exercise period (ATS in S2 position)= CDT (Exerciser) timing period +T (S1 stable Timer) timing period.

Katolight Service - Master Repair Manual - Page 4322

Load / No-Load Clock Exerciser

Allows the Generator to start and run unloaded or to simulate a power failure, start Generator and run under load. Can be configured by the end user for 1, 7, 14, 28, or 365 day cycles.

- A total of 7 independent No Load exercise periods (up to 10 hours each) can be programmed for each of the daily, weekly, 14-day, and 28-day exercisers.
- A total of 12 independent No Load exercise periods (up to 10 hours) can be programmed for the 365-day Exerciser.

How to Configure (CFG) the Exerciser

1. Beginning from the **S1 OK** screen, press **MORE** then **CFG**.
2. Press **MORE** to scroll to **CONFIG CLOCK EXERCISER** screen.
3. The third line of the **CONFG CLOCK EXERCISER** will show either **DAILY, WEEKLY, 14 DAY, 28 DAY, 365 DAY** or **OFF**.
4. If the third line of the **CONFG CLOCK EXERCISER** shows **DAILY, WEEKLY, 14 DAY, 28 DAY**, or **365 DAY** as desired, press **MORE** repeatedly to **BACK**. Press **ESC** then proceed to the **SET** menu to set the **EXERCISER**.
5. If the third line of the **CONFG CLOCK EXERCISER** shows **OFF**, continue.
6. Press **SEL**.
7. Enter **ACCESS** code located on white label on the back of the controller.
8. Press **UP** or **DOWN** to select **DAILY, WEEKLY, 14 DAY, 28 DAY**, or **365 DAY** as desired.
9. Press **SAVE**.
10. Press **MORE** repeatedly to **BACK** then **ESC** to **S1 OK** screen.

How to set (SET) the DAILY Exerciser

1. Beginning from the **S1 OK** screen, press **MORE** then **SET**.
2. Press **MORE** repeatedly until **SET EXERCISER** screen.
3. Press **SEL**.
4. Enter **ACCESS** code located on white label on the back of the controller.
5. Press **SEL**
6. Cursor is indicated as a line under character to be changed. Change values with up and down keys. Press **SAVE** after each entry to save value and to move to the next value to be changed.
7. Press **BACK** when complete.
8. Press **MORE** repeatedly until **SET USER SETUP**. Press **BACK** then **ESC** to the **S1 OK** screen.

How to Bypass (Cancel) an exercise during an exercise cycle

1) Press **BPASS**
2) Allow the controller to complete the Engine cool down cycle.

If the CD Exerciser is configured or Set for a No-Load Exercise. Or allow the controller to complete retransfer to Source 1. If the CD Exerciser is configured for a Load Exerciser

How to Bypass the next exercise event and Keep the rest of scheduled events unchanged

1) Press **TEST**
2) Press **MORE**
3) Press **BYPASS EXER**

To re-institute the next exercise event back, press **CANCL BPASS**

How to check the next exercise event

1) From **S1 OK** screen, press **MORE** three times.
2) The unit will display the **PLANT EXERCISER NEXT** event in **DAYS, HOURS**, and **MINUTES**
3) Press **ESC** to **S1 OK** Screen.

Notes:

- In the **S1 OK** screen, an (*E*) appears in the upper right hand corner of LCD screen when exercise is impending.
- For Load Exerciser, actual exercise period (ATS in S2 position)= **CDT** (Exerciser) timing period +T (S1 Stable Timer) timing period.
- A value greater than zero must be entered in the Exerciser duration field to be accepted as a valid exercise period.
- The Exercise cycle will be repeated on a regular basis as programmed and initiated in the **SET** menu depending on what Exerciser was configured (selected) in the **CFG** menu.

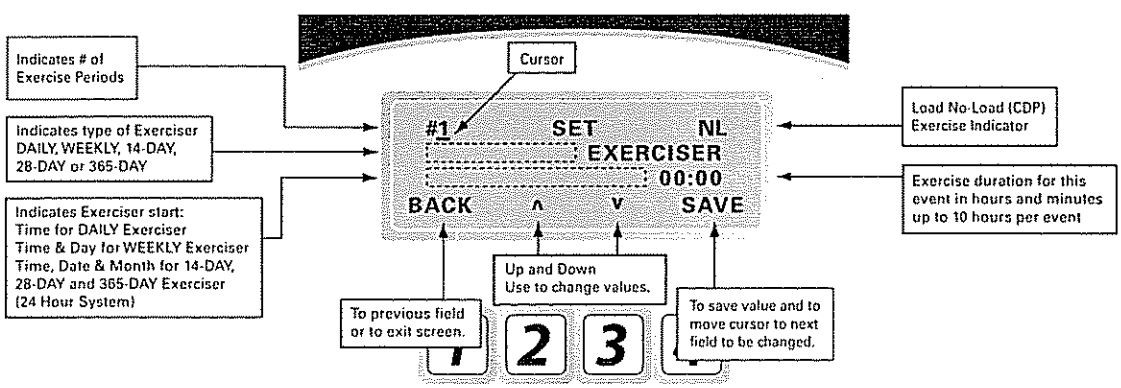

Katolight Service - Master Repair Manual - Page 4323

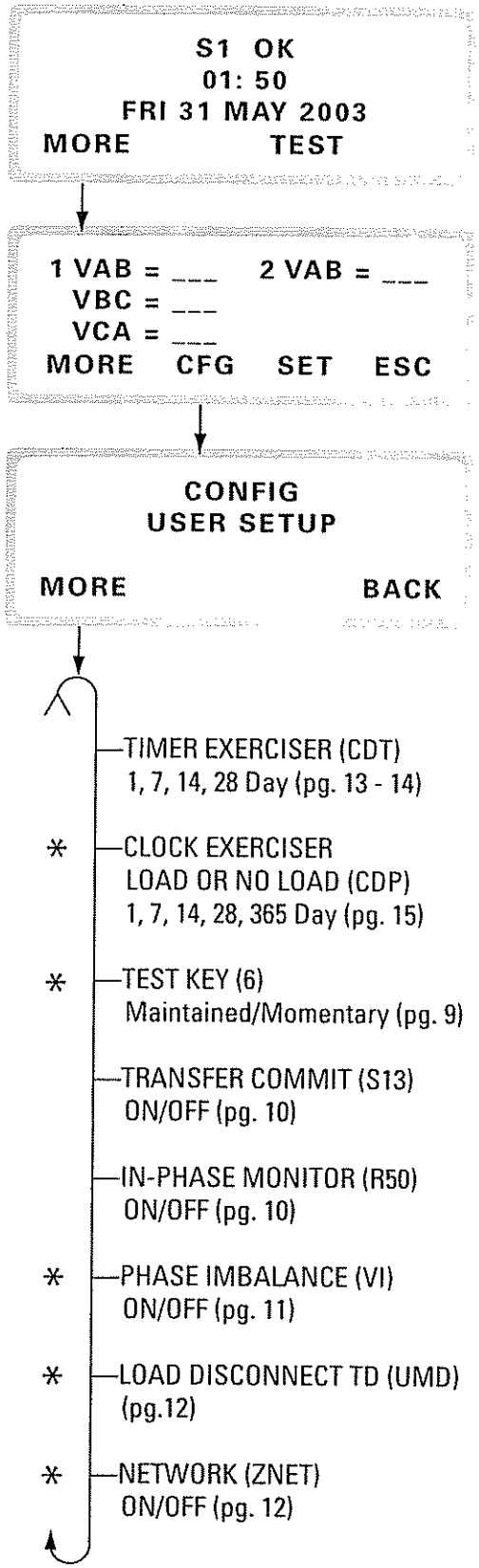

* Optional Accessories

Turn options ON or OFF via keypad through the CFG menu

Enter six digit access code
(The factory assigned six-digit access code is located on the back of the controller)

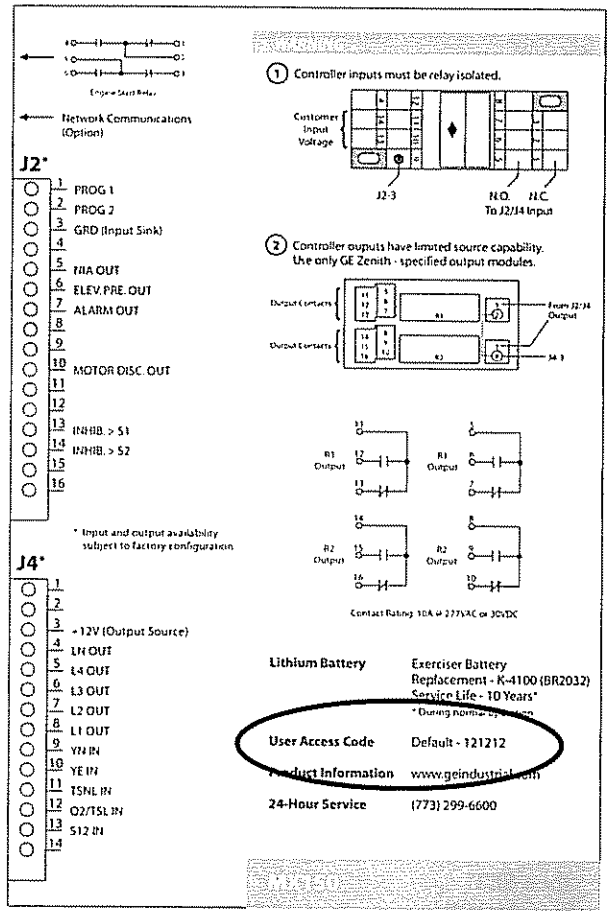

Figure 9

Katolight Service - Master Repair Manual - Page 4324

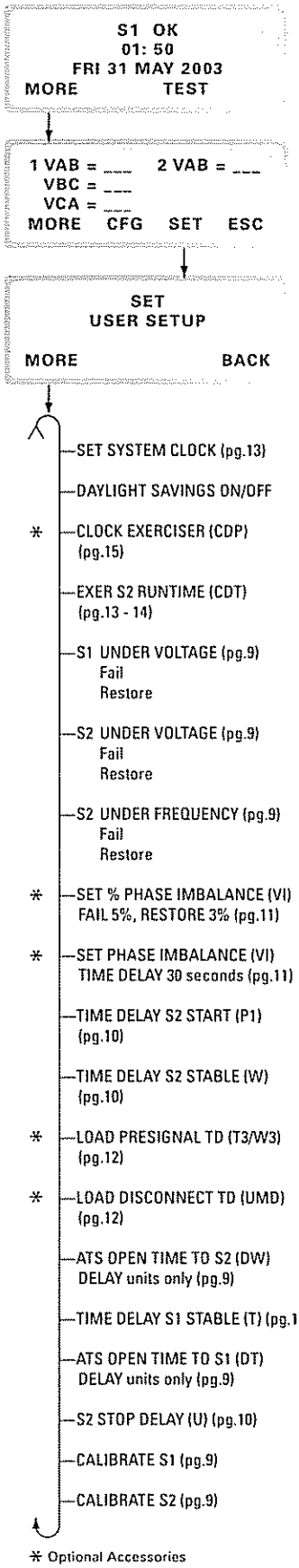

* Optional Accessories

Change adjustable values through the SET menu.

Enter six digit access code
(The factory assigned six-digit access code is located on the back of the controller)

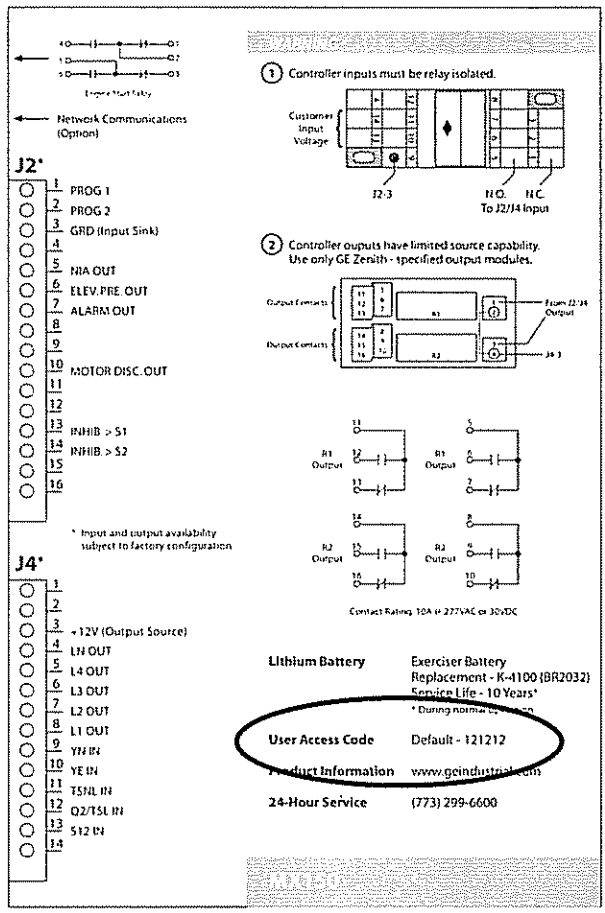

Figure 9

Katolight Service - Master Repair Manual - Page 4325

S1 OK
01: 50
FRI 31 MAY 2003
MORE TEST

—PHASE TO PHASE VOLTAGE, S1 & S2

—FREQUENCY INDICATION FOR S1 & S2
(K/P) (pg.10)

—PLANT EXERCISER:
Next Impending Exerciser
(shows only if set)

—SYSTEM INFO:
- Serial #: Unit Serial #
- Rev #: Software Revision #
- Event Log: Sequentially Numbered Log of 16 events that track date, time, reason and action taken
- Data: Total Life Transfers (N2P)
  Days Powered Up
  Total Transfers to S2
  Total S1 Failures
  Time S1 available in Hrs
  Time S2 available in Hrs. (N1P)

—CHANGE USER ACCESS CODE

View System Data

Enter six digit access code
(The factory assigned six-digit access code is located on the back of the controller)

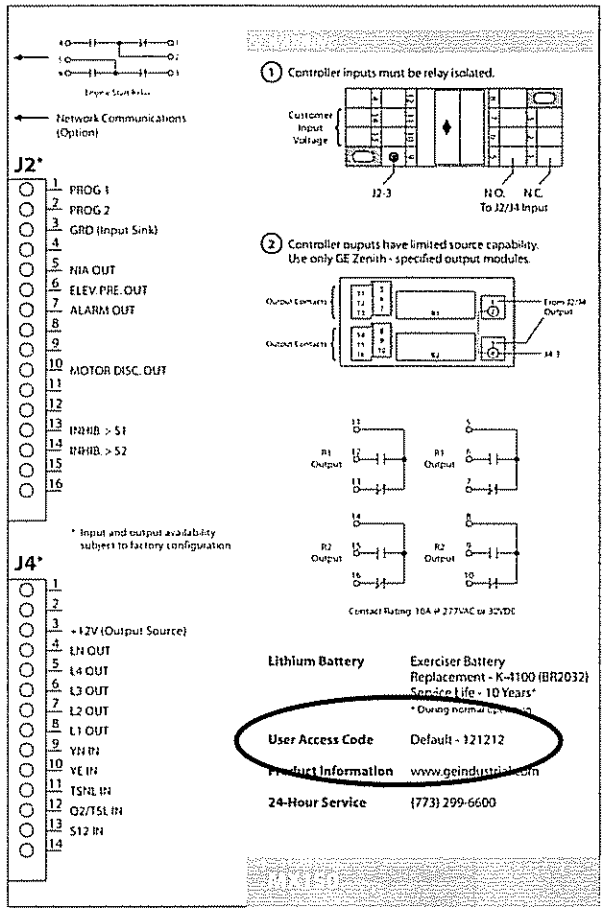

Figure 9

Katolight Service - Master Repair Manual - Page 4326

NOTICE

A periodic test of the transfer switch under load conditions is recommended to insure proper operation. (See National Electric Code articles 700 and 701)

ATS Testing

Start generator and verify proper voltage, frequency and phase sequence (match to Source 1). Shut down gen set and place in Auto. Complete the visual inspection of the transfer switch, and close the cabinet door.

Initiate the test by pressing the TEST button on the LCD keypad. The controller will then prompt for your access code. After entering the code, three test options will appear—XFR LOAD, FAST TEST and NO XFR (See Figure 10).

- **XFR LOAD** test starts the generator and using the current timer settings, transfers the load to Source 2.
- **FAST TEST** test presets timer values to a maximum 30 seconds during the test. After completion of the test, all timers are reset to their original values. (T3, W3, DT and DW remain)
- **NO XFR** test starts the generator but does not transfer the load to the Source 2.

Press and hold the desired test option button until the switch transfers to Source 2 (load test) or until the generator has been run for the desired amount of time (no load test). Releasing the test button before W timer timeout will abort the test (Exception: when the transfer commit option, is configured "ON").

To test lamps, press TEST then scroll through MORE, then press LAMP TEST. To cancel LAMP TEST press MORE.

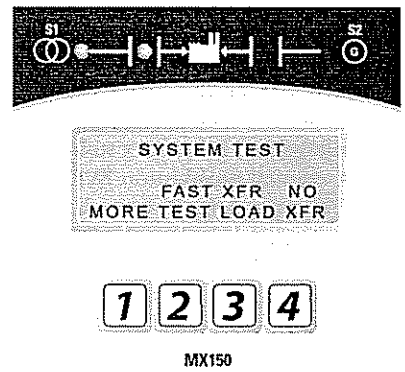

Figure 10

Standard Transition

When the test is initiated, the controller initiates the Time Delay Source 2 Start Timer (Engine Start Timer "P") cycle. A manual CANCEL button is provided to cancel the test if desired. Upon completion of the (P) time delay, an Engine start Signal is sent to Source 2. When Source 2 voltage and frequency reach the preset "Restore" Values, the time delay to Source 2 Timer (W) begins its timing cycle to ensure voltage and frequency stabilization before transfer. A manual pushbutton BYPASS is provided to bypass the "W" time delay if desired. After the (W) time delay, the CCE relay energizes the CE solenoid to close the transfer switch in to Source 2. The SE limit switch activates to de-energize the CCE relay.

Restoration of Source 1 Power:

Deactivating the test switch initiates re-transfer to Source 1 sequence.The delay to Source 1 Timer (T) begins its timing cycle to ensure voltage and frequency stabilization before retransfer. A manual pushbutton BYPASS is provided to bypass the "T" time delay if desired. After the (T) time delay, the CCN relay energizes the CN solenoid to retransfer the switch to Source 1. The SN limit switch activates to de-energize the CCN relay.

Immediately after re-transfer, the S2 Stop Delay Timer (Delay to Engine Stop "U") begins its cycle to allow Source 2 Engine to run unloaded. A manual pushbutton BYPASS is provided to bypass the "U" time delay if desired. Upon completion of the (U) timing cycle, the controller sends an Engine stop signal.

Delayed Transition

Source 1 Power Failure:

When the test is initiated, the controller initiates the Time Delay Source 2 Start (Engine Start Timer "P") cycle. A manual CANCEL button is provided to cancel the test if desired Upon completion of the (P) time delay, an Engine start Signal is sent to Source 2. When Source 2 voltage and frequency reach the preset "Restore" values, the time delay to open Source 1 timer (W) begins its timing cycle to ensure voltage and frequency stabilization before re-transfer. A manual pushbutton BYPASS is provided to bypass the "W" time delay if desired. After the (W) time delay, the CCNO relay energizes the CNO solenoid to open the transfer switch out of Source 1 position. The time delay to Source 2 timer (DW) begins its timing cycle. After the (DW) time delay, the CCE relay energizes. The switch then completes transfer to Source 2 by energizing the CE solenoid. The SE limit switch activates to de-energize the CCE relay.

Restoration of Source 1 Power:

Deactivating the test switch initiates re-transfer to Source 1sequence.The delay to open Source 2 Timer (T) begins its timing cycle to ensure voltage and frequency stabilization before retransfer. A manual pushbutton BYPASS is provided to bypass the "T" time delay if desired. After the (T) time delay, the CCEO relay energizes the CEO solenoid to open the switch out of Source 2 position. The time delay to Source 1 timer (DT) begins its timing cycle. After the (DT) time delay, the CCN relay energizes the CN solenoid to complete re-transfer of the switch to Source 1. The SN limit switch activates to de-energize the CCN relay.

Immediately after re-transfer, the S2 Stop Delay Timer (Delay to Engine Stop "U") begins its cycle to allow Source 2 Engine to run unloaded. A manual pushbutton BYPASS is provided to bypass the "U" time delay if desired. Upon completion of the (U) timing cycle, the controller sends an Engine stop signal.

Katolight Service - Master Repair Manual - Page 4327

Standard Transition

Source 1 Power Failure:
When Source 1 voltage or frequency has fallen below the preset "Fail" values, the controller initiates the Time Delay Source 2 Start Timer (Engine Start Timer "P") cycle. Upon completion of the (P) time delay, an Engine start Signal is sent to Source 2. When Source 2 voltage and frequency reach the preset "Restore" Values, the time delay to Source 2 Timer (W) begins its timing cycle to ensure voltage and frequency stabilization before transfer. A manual pushbutton BYPASS is provided to bypass the "W" time delay if desired. After the (W) time delay, the CCE relay energizes the CE solenoid to close the transfer switch in to Source 2. The SE limit switch activates to de-energize the CCE relay.

Restoration of Source 1 Power:
When Source 1 power reach the preset "Restore" values, the controller initiates re-transfer to Source 1sequence.The delay to Source 1 Timer (T) begins its timing cycle to ensure voltage and frequency stabilization before retransfer. A manual pushbutton BYPASS is provided to bypass the "T" time delay if desired. After the (T) time delay, the CCN relay energizes the CN solenoid to retransfer the switch to Source 1. The SN limit switch activates to de-energize the CCN relay.

Immediately after re-transfer, the S2 Stop Delay Timer (Delay to Engine Stop "U") begins its cycle to allow Source 2 Engine to run unloaded. A manual pushbutton BYPASS is provided to bypass the "U" time delay if desired. Upon completion of the (U) timing cycle, the controller sends an Engine stop signal.

Delayed Transition

Source 1 Power Failure:
When Source 1 voltage or frequency has fallen below the preset "Fail" values, the controller initiates the Time Delay Source 2 Start (Engine Start Timer "P") cycle. Upon completion of the (P) time delay, an Engine start Signal is sent to Source 2. When Source 2 voltage and frequency reach the preset "Restore" values, the time delay to open Source 1 timer (W) begins its timing cycle to ensure voltage and frequency stabilization before re-transfer. A manual pushbutton BYPASS is provided to bypass the "W" time delay if desired. After the (W) time delay, the CCNO relay energizes the CNO solenoid to open the transfer switch out of Source 1 position. The time delay to Source 2 timer (DW) begins its timing cycle. After the (DW) time delay, the CCE relay energizes. The switch then completes transfer to Source 2 by energizing the CE solenoid. The SE limit switch activates to de-energize the CCE relay.

Restoration of Source 1 Power:
When Source 1 power reach the preset "Restore" values, the controller initiates re-transfer to Source 1 sequence.The delay to open Source 2 Timer (T) begins its timing cycle to ensure voltage and frequency stabilization before retransfer. A manual pushbutton BYPASS is provided to bypass the "T" time delay if desired. After the (T) time delay, the CCEO relay energizes the CEO solenoid to open the switch out of Source 2 position. The time delay to Source 1 timer (DT) begins its timing cycle. After the (DT) time delay, the CCN relay energizes the CN solenoid to complete re-transfer of the switch to Source 1. The SN limit switch activates to de-energize the CCN relay.

Immediately after re-transfer, the S2 Stop Delay Timer (Delay to Engine Stop "U") begins its cycle to allow Source 2 Engine to run unloaded. A manual pushbutton BYPASS is provided to bypass the "U" time delay if desired. Upon completion of the (U) timing cycle, the controller sends an Engine stop signal.

Table 3

Timer Designations as they appear in the SET menu

ATS Type	P	W	DW	T	DT	U
Standard	Time Delay S2 Start	Time Delay S2 Stable	→	Time Delay S1 Stable	→	S2 Stop Delay
Delay	Time Delay S2 Start	Time Delay S2 Stable	ATS Open Time to S2	Time Delay S1 Stable	ATS Open Time to S1	S2 Stop Delay
Source 1 Fails	Transfer to Source 2 →			Source 1 Returns ↓	Transfer to Source 1 →	Engine Cooldown

Katolight Service - Master Repair Manual - Page 4328

Standard Transition

Each MX150 microprocessor based ATS controller requires a relay/transformer box to apply line voltage to the ATS operator via coil control relays. Also required is power for the MX150 printed circuit board and an application of sensing voltage proportional to line voltage. This is accomplished by the relay transformer box. This method of switching operator voltage and applying power and sensing voltage to the printed circuit board isolates the MX150 from the line voltage, further protecting the controller from harmful line transients. Two versions of the R/T box exist depending on the type of ATS (standard transition or delayed transition).

The following layout drawings of the R/T Box components (standard and delayed transition) include a bill of materials for replacement parts. Schematics are included to indicate proper wiring.

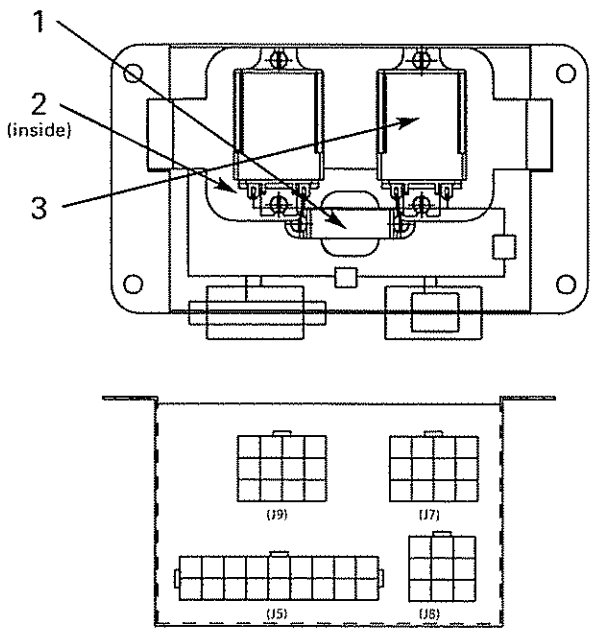

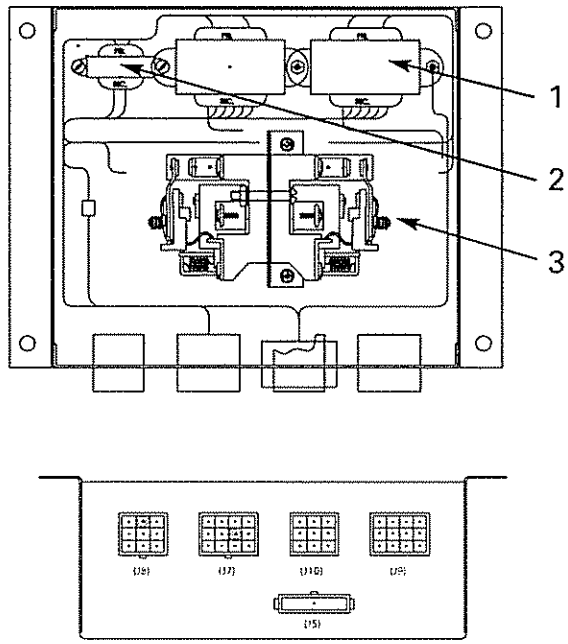

40-225 Amp Molded Power Section Transformer Usage *(see Figure 10)*

R/T Box Assembly Part No.	Primary Voltage at 50/60 Hz	1 VA XFMR Part No.	25 VA XFMR Part No.
57P-1115	120V	K-3216	K-3224
57P-1116	208-220V	K-3217	K-3225
57P-1117	230-240V	K-3218	K-3226
57P-1118	277V	K-3219	K-3227
57P-1119	380-400V	K-3220	K-3228
57P-1120	416-440V	K-3221	K-3229
57P-1121	460-480V	K-3222	K-3230
57P-1122	575-600V	K-3223	K-3231

40-3000 Amp - All Other Standard Types Transformer Usage *(see Figure 11)*

R/T Box Assembly Part No.	Primary Voltage at 50/60 Hz	1 VA XFMR Part No.	25 VA XFMR Part No.
50P-1005	120V	K-3216	K-3224
50P-1006	208-220V	K-3217	K-3225
50P-1007	230-240V	K-3218	K-3226
50P-1008	277V	K-3219	K-3227
50P-1009	380-400V	K-3220	K-3228
50P-1010	416-440V	K-3221	K-3229
50P-1011	460-480V	K-3222	K-3230
50P-1012	575-600V	K-3223	K-3231

Bill of Material

Item	Part No.	Description	Qty
1	See Chart	Transformer (1 VA)	1
2	See Chart	Transformer (25 VA)	2
3	K-1274	Relay Flange Mounted	2

Bill of Material

Item	Part No.	Description	Qty
1	See Chart	Transformer (25 VA)	2
2	See Chart	Transformer (1 VA)	1
3	K-1260	Coil Control Relay (24V)	2

Katolight Service - Master Repair Manual - Page 4329

Delayed Transition

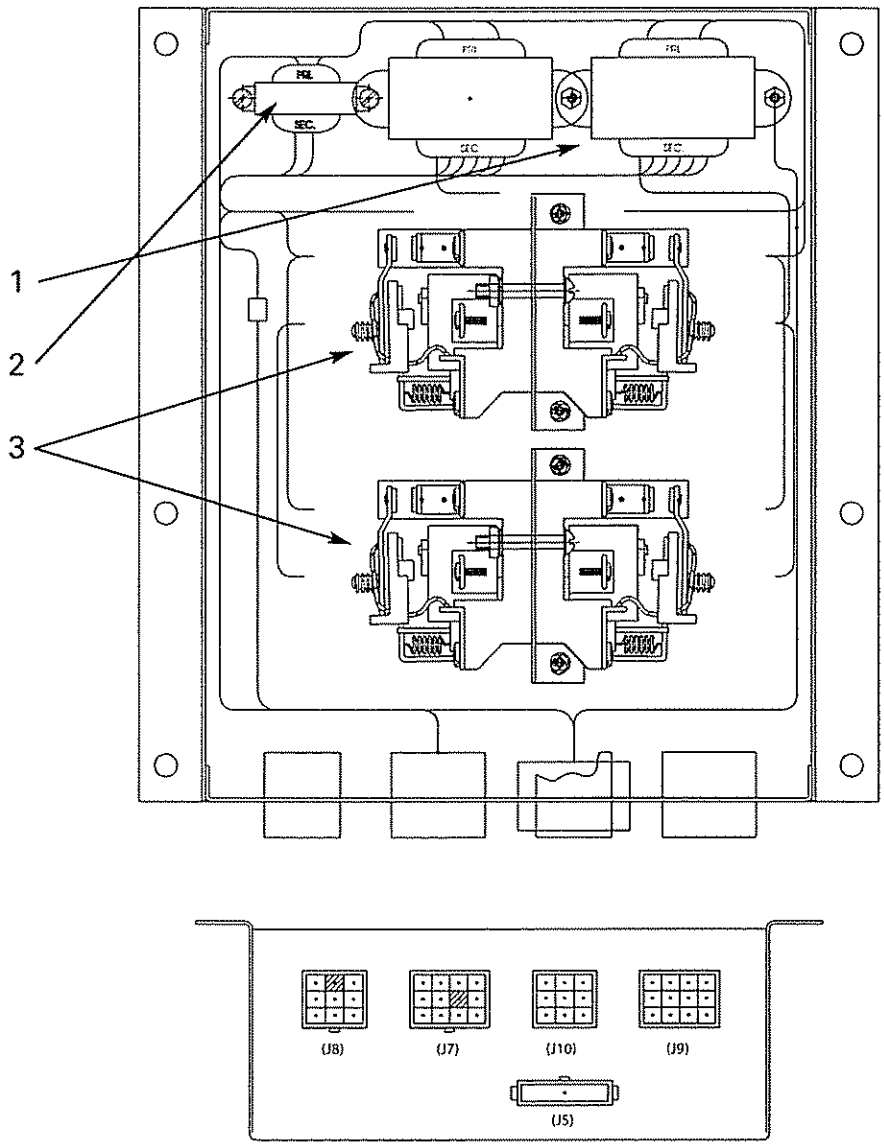

Transformer Usage

R/T Box Assembly Part No.	Primary Voltage at 50/60 Hz	1 VA XFMR Part No.	25 VA XFMR Part No.
50P-1013	120V	K-3216	K-3224
50P-1014	208-220V	K-3217	K-3225
50P-1015	230-240V	K-3218	K-3226
50P-1016	277V	K-3219	K-3227
50P-1017	380-400V	K-3220	K-3228
50P-1018	416-440V	K-3221	K-3229
50P-1019	460-480V	K-3222	K-3230
50P-1020	575-600V	K-3223	K-3231

Bill of Material

Item	Part No.	Description	Qty
1	See Chart	Transformer (25 VA)	2
2	See Chart	Transformer (1 VA)	1
3	K-1260	Coil Control Relay (24V)	4

Katolight Service - Master Repair Manual - Page 4330

Standard Transition R/T Box Schematic

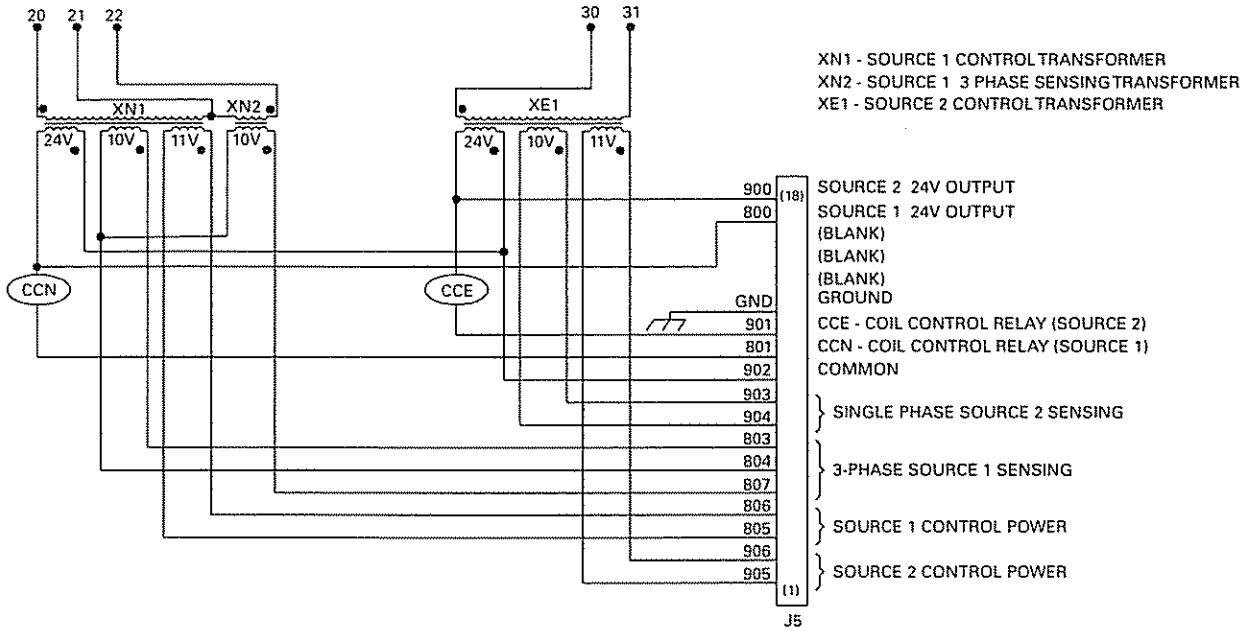

Delayed Transition R/T Box Schematic

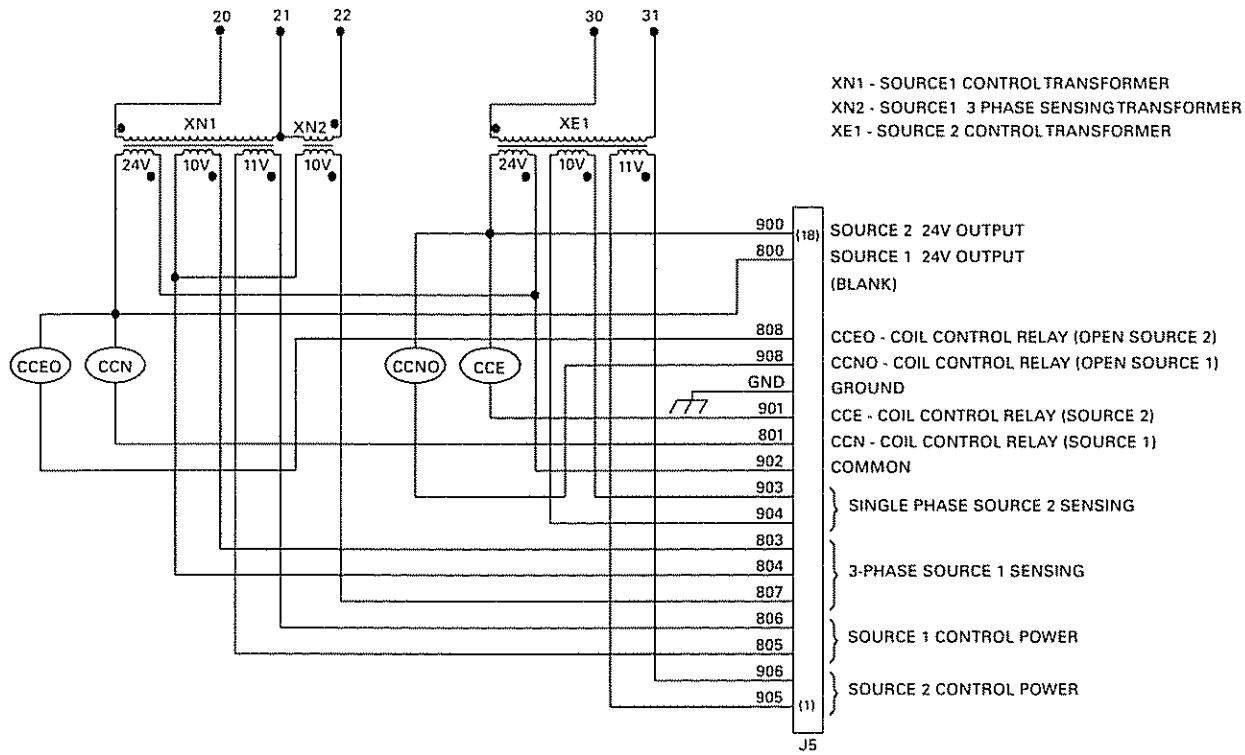

Katolight Service - Master Repair Manual - Page 4331

Troubleshooting and Diagnostics

⚠ DANGER ⚠

HAZARDOUS VOLTAGES CAN CAUSE SEVERE INJURY OR DEATH.
These charts may indicate problems that require authorized GE Zenith service personnel.
Hazardous voltages may exist on termination plugs other than those that go into the MX150.

General Troubleshooting

The following troubleshooting guide is used to recognize, and determine basic faults. When using this guide, it will ask several questions about the condition of the switch. This guide will then list an order of the possible faults. You will then look at the first suspected fault to determine if it is the problem. If it is not a fault, you go to the second suspected fault. If you go through all of the suspected faults, or the chart instructs you to, call a GE Zenith Representative for further assistance.

NOTE: When you use the troubleshooting charts, the Annunciation column refers to the LED's on the control panel.

Symptom	Annunciation	Possible Cause(s)	Corrective Action
Engine does not START	SOURCE 2 AVAILABLE LED off	Engine start wires not terminated properly	Check engine start connections
		Generator is in OFF position	Investigate why Engine Control Switch was turned off
Engine does not stop	LCD Display - "TD Engine Cool Down"	U timing cycle not complete	Check U timer setting
	SOURCE 1 POSITION, and SOURCE 1 and SOURCE 2 AVAILABLE LEDs on, but U timer has timed out	Engine start wires not terminated correctly	Check Engine Start Connections
		Generator in MANUAL	Place generator in AUTO
ATS will not transfer to SOURCE 2 ZTG Series	SOURCE 2 AVAILABLE LED off	SOURCE 2 voltage or frequency not within acceptable parameters	Check: Engine Start Connections, Generator Breaker, Generator Output, and Engine Control Switch
	None	Power supply connector unplugged	Plug in connector
	LCD Display - "S1 _ _ _ _ TD XFR S1>S2 Time Remaining _ _ _ _"	**W** timing cycle not complete	Check **W** Timer setting
ATS will not transfer to SOURCE 1 ZTGD Series	LCD Display - "ATS Open Time Remaining _ _ _ _"	**DW** timing cycle not complete	Check **DW** Timer setting
	SOURCE 1 AVAILABLE LED off	SOURCE 1 voltage or frequency not within acceptable parameters	Check utility and utility breakers
	None	Power supply connector unplugged	Plug in connector
	LCD Display - "Diagnostic Code 001"	Limit switch or RT box connector unplugged	Call Technical Services
	LCD Display - "S1 OK Time Remaining _ _ _ _ Bypass"	**T** timing cycle not complete	Check **T** Timer setting
	LCD Display - "ATS Open Time Remaining _ _ _ _"	**TD** timing cycle not complete	Check **DT** Timer setting

Katolight Service - Master Repair Manual - Page 4332

⚠ CAUTION ⚠

Due to hazardous voltage and current, GE Zenith recommends that a GE Zenith Certified technician or a qualified electrician must perform the installation and maintenance of the switch.

⚠ WARNING ⚠

Both power sources must be disconnected before manual operation of the switch.

A preventive maintenance program will insure high reliability and long life for the transfer switch. The preventive maintenance program for the transfer switch should include the following items:

Inspection and Cleaning

The switch should be inspected for any accumulation of dust, dirt, or moisture, and should be cleaned by vacuuming or wiping with a dry cloth or soft brush. do not use a blower since debris may become lodged in the electrical and mechanical components and cause damage.

Remove the transfer switch barriers and check the condition of the contacts. Any surface deposits must be removed with a clean cloth (do not use emery cloth or a file). If the contacts are pitted or worn excessively, they should be replaced. A general inspection of mechanical integrity should be made to include loose, broken or badly worn parts.

Servicing

All worn or inoperative parts must be replaced using GE Zenith recommended replacement parts. Please refer to the Replacement Parts manual for specific part information and ordering procedures. Please contact the GE Zenith Technical Services Department for the Replacement Parts manual.

The operating mechanism of the transfer switch is lubricated with Lubriplate 105. The lubricant applied at the factory provides adequate lubrication for the lifetime of the switch. Should debris contaminate the mechanism, clean and apply additional Lubriplate.

GE Zenith can provide complete preventative maintenance services. Please contact the GE Zenith Technical Services Department for additional information.

CDT battery replacement - lithium batteries may last up to 10 years, however it is recommended that battery replacement be included in a 3-5 year service cycle. The battery maintains the exerceser memory only and does not otherwise affect the operation.

Testing

A manual operator handle is provided with the transfer switch for maintenance purposes only. Manual operation of the switch must be checked before it is operated electrically. **Both power sources must be disconnected before manual operation of the switch.** Insert the handle and operate the transfer switch between the Source 1 and Source 2 positions. The transfer switch should operate smoothly without binding. Return the switch to Source 1 position, remove the handle, and return it to the holder provided.

After completing the inspection, cleaning and servicing of the transfer switch, reinstall the switch cover, and close and lock the cabinet door. Reclose the circuit breakers feeding the utility and generator sources to the switch.

Initiate the electrical transfer test by activating the TS test switch. P timer will time out and the microcontroller will send an engine start signal. When the W time has elapsed, the switch will complete its transfer by closing into Source 2.

Deactivating the test switch will start retransfer to Source 1. The switch will complete its retransfer to Source 1 after the time delay of the T timer. The U engine overrun timer allows the engine generator to run unloaded for a preset cool down period.

NOTE: A periodic test of the transfer switch under load conditions is recommended to insure proper operation. (See National Electric Code articles 700 and 701).

⚠ WARNING ⚠

When performing a hi-pot or dielectric test on the power section, DISCONNECT the control panel plugs from the microprocessor to avoid potential damage.

Katolight Service - Master Repair Manual - Page 4333

Katolight Service - Master Repair Manual - Page 4334

Katolight Service - Master Repair Manual - Page 4335



GE Zenith Controls

A Product of GE Industrial Systems
General Electric Company
830 West 40th Street, Chicago, IL 60609 USA
773 299-6600, Fax: 773 247-7805
www.geindustrial.com

OPERATION AND MAINTENANCE MANUAL
TRANSFER SWITCH CONTROL PANEL
MX200 MICROPROCESSOR CONTROLLER

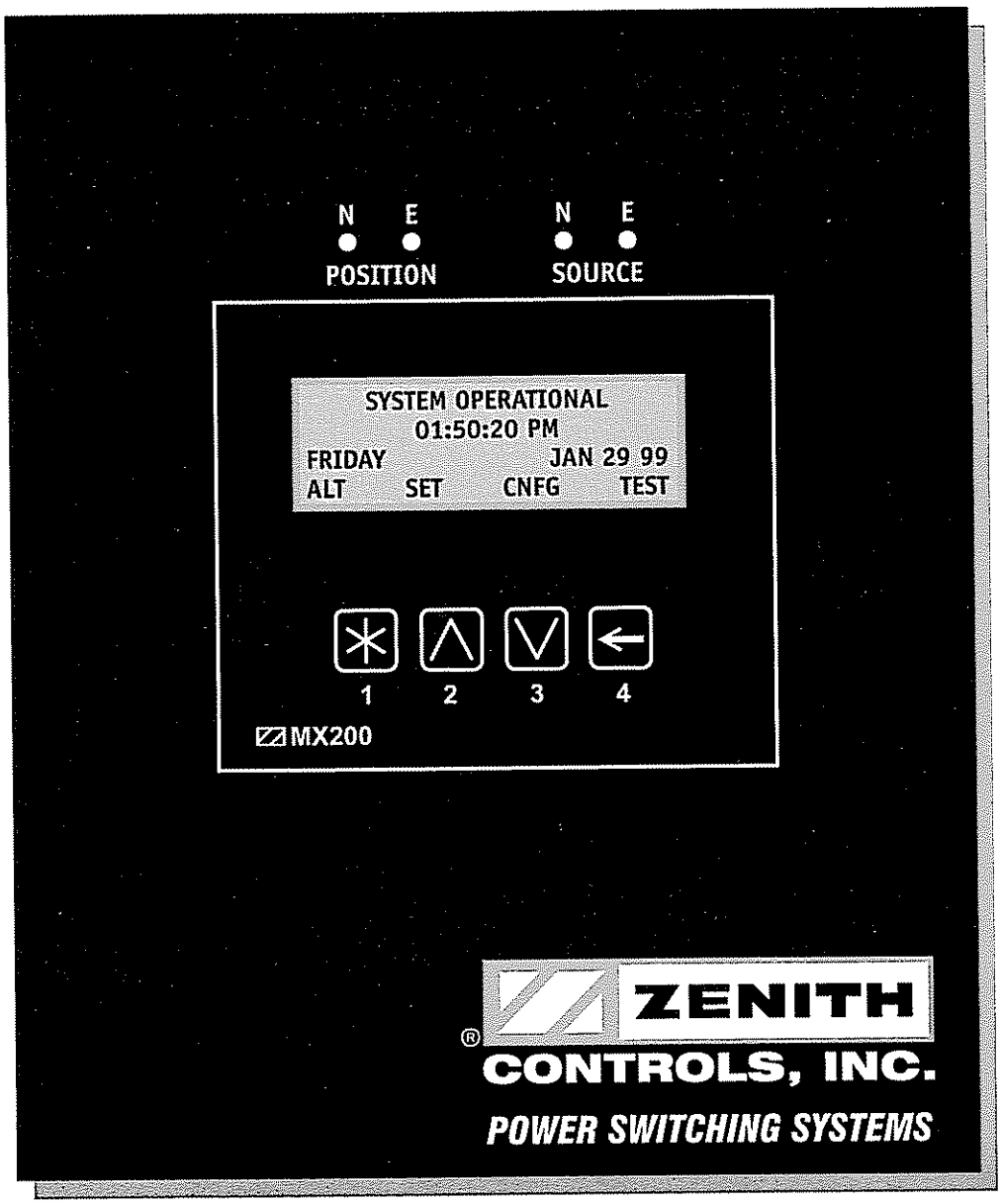

ZENITH
CONTROLS, INC.

ISO 9001 50R-2000C 12/98

Table of Contents

		Page
☞	Safety	1
	The MX200 Controller Overview	2
☞	Installation - Engine Start Contact	3
	Installation - Optional Accessories	4
	Programmable Options	10
	User Settings - SET Menu	11
	User Settings - CNFG Menu	12
	User Settings - ALT Menu	13
	How to Set the System Clock	14
	How to Set the Plant Exerciser	15
	Exerciser Types	16
	Timers	18
	Timer Designations	20
	Sensors	21
	Normal Sensors	22
	Emergency Sensors	23
	Optional Pilot Devices	24
☞	Testing	27
	Troubleshooting	28
	Power Failure Sequence of Operation	29
	Index of Terms	32

☞ = Quick Start

Safety

⚠ DANGER

HAZARDOUS VOLTAGE
(Can Cause Severe Injury or Death)

Turn OFF all power before installation, adjustment, or removal of transfer switch or any of its components.

Installation for each ATS is detailed in the information package which includes:

- Operation and Maintenance Manual for Control Panel (this manual)
- Power Panel Manual
- Specific Schematics Supplied With Each Transfer Switch

Final Equipment Inspection

Prior to energizing the transfer switch:

1. Remove any debris incurred due to shipment or installation. **DO NOT** use a blower since debris may become lodged in the electrical and mechanical components and cause damage. Use of a vacuum is recommended.
2. Verify that all cabled connections are correct and that phase rotation of both sources match.
3. Check engine start connections and verify the correct connection of all control wires.
4. Check settings of all timers and adjust as necessary. Also adjust any optional accessories as required.
5. Check the integrity of power connections by verifying actual lug torque values as specified in the power panel manual.
6. Make sure that all covers and barriers are installed and properly fastened.

NOTE: Power Panels ship from Zenith in the Normal Position.

Equipment Inspection and Storage

Immediately inspect the transfer switch when received to detect any damage which may have occurred during transit. If damage is found or suspected, file claims as soon as possible with the carrier and notify the nearest Zenith representative.

Before installation, it is necessary to store the transfer switch in a clean dry place, protected from dirt and water. Provide ample air circulation and heat, if necessary, to prevent condensation.

Storage Temperature:	-30 C to + 85 C (-22 F to +149 F)
Operating Temperature (Ambient):	-20 C to +75 C (-4 F to +167 F) [40-260 Amps] -20 C to +60 C (-4 F to +104 F) [400-4000 Amps]
Humidity:	5% to 95% (non-condensing)

Katolight Service - Master Repair Manual - Page 4339

The MX200 Controller Overview

The MX200 CONTROLLER consists of two major assemblies:

I. The ***Microprocessor*** contains the following:

A. Customer Input and Output (I/O) for system interface. Located on the left hand side of the back of the unit (see figure 1)
   1. I/O accessories that can be found here are:
      a. Engine start relay P output
      b. Source Availability A1 and A1E output (optional)
      c. Pre-Signal to transfer T3, W3 and A6 output (optional)
      d. Transfer Inhibit Q3 and Q7 input (optional)
      e. Remote test Q2 input (optional)
      f. Load shed R15 input (optional)
      g. Network interface ZNET200 input/output (optional)

B. LCD and Keypad located on the exterior of the door (see figure 2)
   1. User accessibility to the following:
      a. LED indication of source availability
      b. LED indication of transfer switch position
      c. LCD screen indicates:
         (1) timer count down (numeric)
         (2) event reporting (text)
      d. Keypad provides user interface to: *[in conjunction with LCD screen]*
         (1) Setting sensors and timers
         (2) Configuring logic accessories

II. The ***R/T box*** (relay transformer box) contains the following: (see figure 1)

A. Relays which are required for controller output to energize the transferring mechanism of the transfer switch at line voltage.

B. Transformers which drop line voltage to control level for controller input.

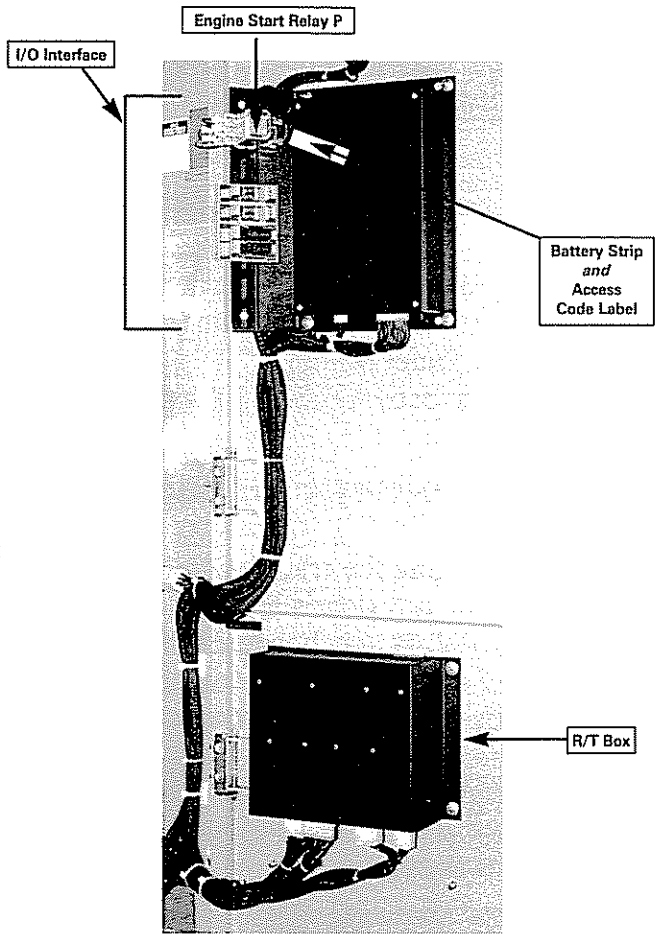

Figure 1

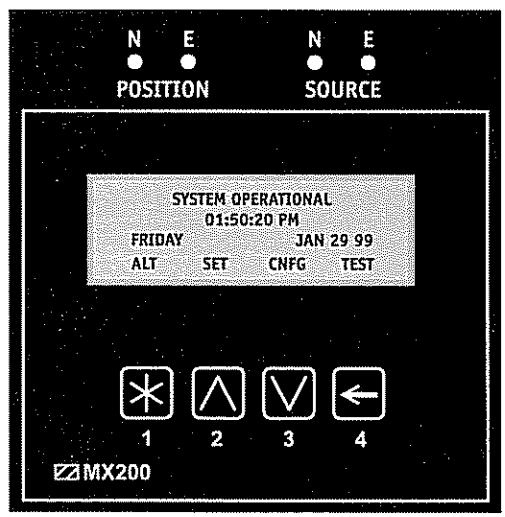

Figure 2

Katolight Service - Master Repair Manual - Page 4340

⚠ DANGER

HAZARDOUS VOLTAGE
(Can Cause Severe Injury or Death)

Turn OFF all power before installation, adjustment, or removal of transfer switch or any of its components.

Connecting Engine Start may cause Generator to start. Before connecting, turn Generator OFF.

Engine Control Connections (E contacts)

Connections for Engine Control are located on the upper left side of the unit (see figure 1). The P relay provides this output. This contact is controlled by the P timer. To change response time to Normal power outage (see page 18 and 20).

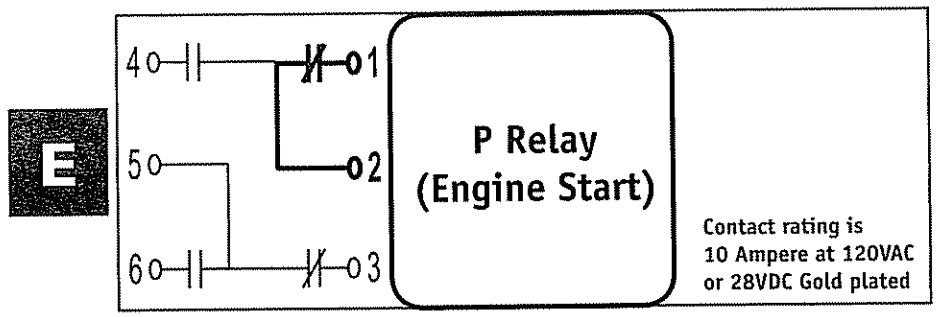

The above diagram represents a de-energized P relay (utility shown de-energized). The majority of generator manufacturers require a contact closure to start Engine. Use terminals #1 and #2.

Note 1: Bypass Isolation Transfer Switches have an auxiliary Engine Start feature. This provides an Engine Start even if the ATS and controls are isolated (*THIS IS A STANDARD FEATURE EXCLUSIVELY ON ZENITH BYPASS PRODUCTS*). The Customer connections on these products are located on the Power Panel, upper right-hand corner. Please refer to the Power Panel instruction manual for complete details.

Note 2: Products equipped with Engine control options such as S1, S2 or P2 provide customer connections on an auxiliary terminal block located on the MX200 DIN rail or auxiliary control panel. Please refer to corresponding option drawing.

Katolight Service - Master Repair Manual - Page 4341

Installation - Optional Accessories

⚠ DANGER

HAZARDOUS VOLTAGE
(Can Cause Severe Injury or Death)

Turn OFF all power before installation, adjustment, or removal of transfer switch or any of its components.

Generally the input and output options are located below the P relay on the same DIN rail (see figure 1). In some cases it may be necessary to mount additional accessories on an auxiliary panel.

Output Option Connections

A1

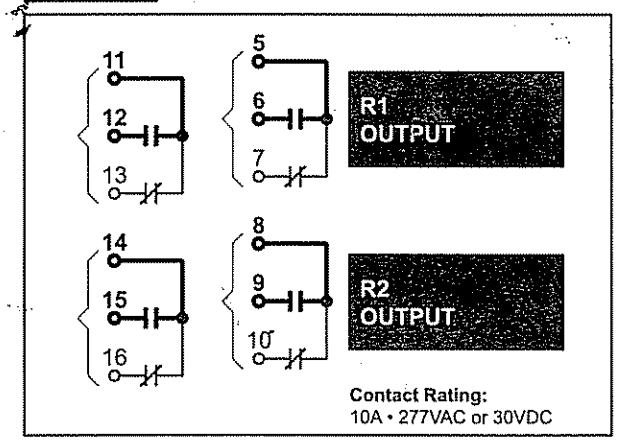

Auxiliary contact(s) that operate(s) based on Normal source availability. Contacts located on R1 and/or R2. Refer to labeling.

Example: Terminal numbers 11 and 12 are closed when Normal source is acceptable (11 and 13 are open). When the Normal source is unacceptable, the opposite is true. Diagrams are shown with Normal unavailable.

A1E

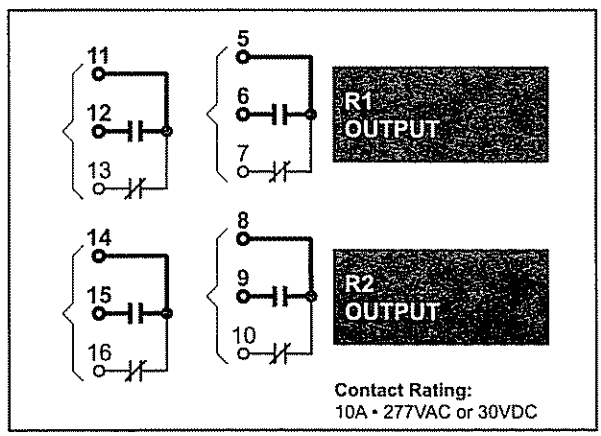

Auxiliary contact(s) that operate(s) based on Emergency source availability. Contacts located on R1 and/or R2. Refer to labeling.

Example: Terminal numbers 11 and 12 are closed when Emergency source is acceptable (11 and 13 are open). When the Emergency source is unacceptable, the opposite is true. Diagrams are shown with Emergency unavailable.

Katolight Service - Master Repair Manual - Page 4342

⚠ DANGER

HAZARDOUS VOLTAGE
(Can Cause Severe Injury or Death)

Turn OFF all power before installation, adjustment, or removal of transfer switch or any of its components.

Output Option Connections *(cont'd)*

A3/A4

These connections are located on the Power Panel. Exact location depends upon which model is used. Refer to the Power Panel instruction manual for details. In all cases the A4 contact closes when the Transfer Switch is in the Normal position and the A3 contact closes when the Transfer Switch is in the Emergency position.

A6

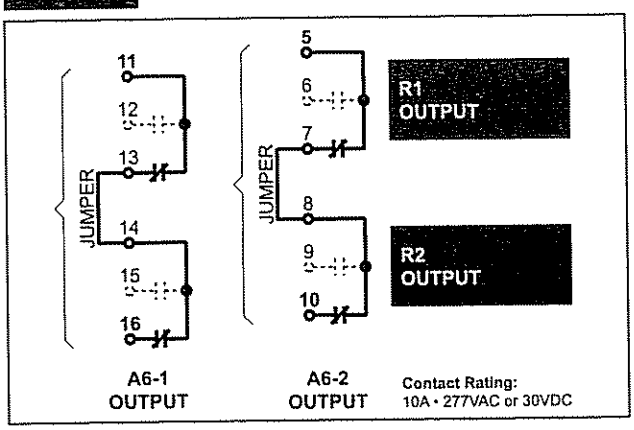

Auxiliary contact(s) that open prior to transfer in either direction.

Example: Terminals 11 to 16 will open five* seconds prior to transfer in either direction and close instantaneously after transfer.

* Pre-signal time is adjustable via T3/W3 timers (see page 11, 19 and 20)

For complete sequence of operation, see page 19

Katolight Service - Master Repair Manual - Page 4343

⚠ DANGER

HAZARDOUS VOLTAGE
(Can Cause Severe Injury or Death)

Turn OFF all power before installation, adjustment, or removal of transfer switch or any of its components.

Output Option Connections *(cont'd)*

A62

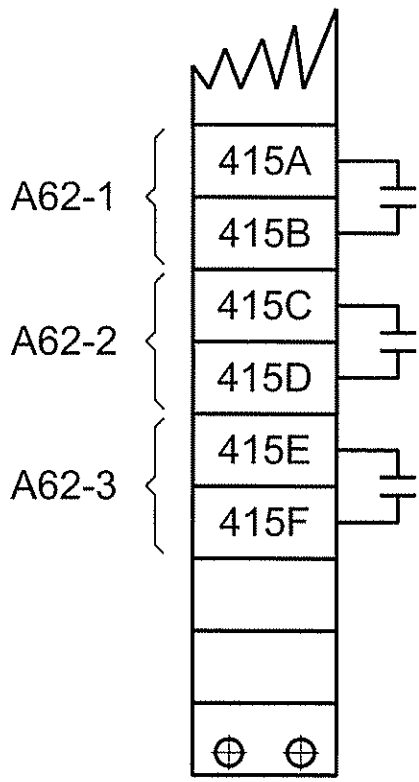

Contact Ratings:
5A 250 VAC

Auxiliary contact(s) that open prior* to transfer in either direction and close in sequence** after transfer.

All A62 contacts will open five* seconds prior to transfer in either direction. Contacts close after transfer when their corresponding timers have timed out.

- A62-1 contact sequence timer is T62-1
- A62-2 contact sequence timer is T62-2
- A62-3 contact sequence timer is T62-3

Example: When all three sequence timers are set for 5 seconds:

- A62-1 closes 5 seconds after transfer and starts T62-2 timer
- A62-2 will close 10 seconds after transfer and then start the T62-3 timer
- A62-3 will then close 15 seconds after transfer and so on.

* pre-signal time is adjustable via T3/W3 timers (see page 11, 19 and 20)

** sequence timers are adjustable and located on the auxiliary panel

Katolight Service - Master Repair Manual - Page 4344

Installation - Optional Accessories *(cont'd)*

⚠ DANGER

HAZARDOUS VOLTAGE
(Can Cause Severe Injury or Death)

Turn OFF all power before installation, adjustment, or removal of transfer switch or any of its components.

Output Option Connections *(cont'd)*

T3/W3

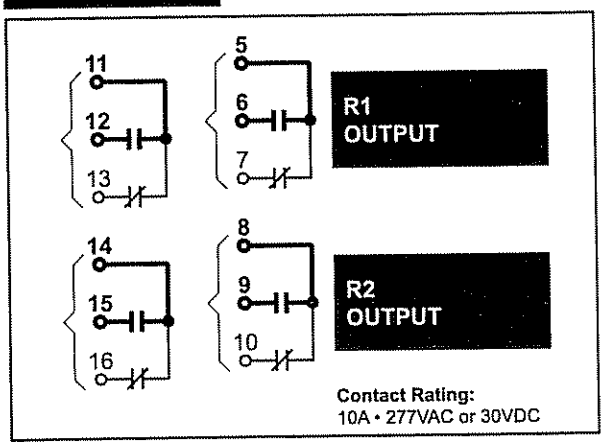

Auxiliary contacts that close five* seconds prior to transfer, and open instantaneously after transfer. Contacts located on R1 and/or R2. Refer to labeling.

- T3 is prior to transfer to Normal.
- W3 is prior to transfer to Emergency.
- T3/W3 is canceled when transfer is due to source outage.

*pre-signal time is adjustable (see page 11, 19 and 20)

Katolight Service - Master Repair Manual - Page 4345

⚠ DANGER

HAZARDOUS VOLTAGE
(Can Cause Severe Injury or Death)

Turn OFF all power before installation, adjustment, or removal of transfer switch or any of its components.

Input Options Connections

Q2

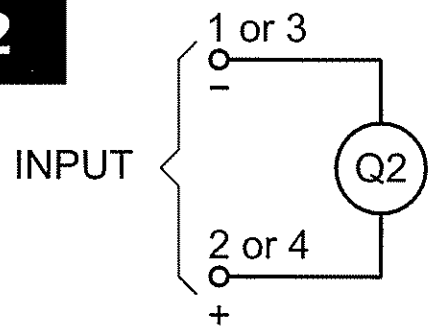

Remote Peak Shave or Area Protection Circuit
Energize Q2 input to simulate a Normal line failure causing the Generator to start and transfer the load to Emergency. Should Emergency fail during this operation, the Transfer Switch will retransfer back to Normal.

Q2 Input Modules:
K-1267, 120VAC INPUT (*Standard*)
K-1266, 24V (AC or DC) or 12VDC INPUT (*Optional*)

Q3

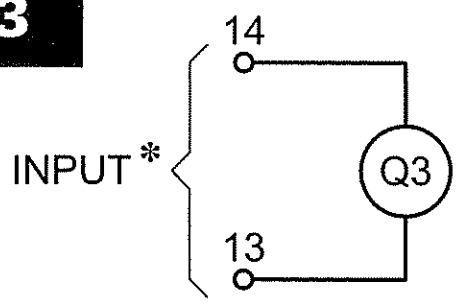

Remote Inhibit Transfer to Emergency Circuit
Voltage applied to Q3 input will allow transfer to Emergency. Conversely, no input on Q3 will inhibit transfer to Emergency.

* To enable Q3 option, engage Q3 jumper.

Q3 Relay:
K-1204, 120VAC *(Standard)*
K-1232, 24VAC; K-1242, 24VDC *(Optional)*

Q7

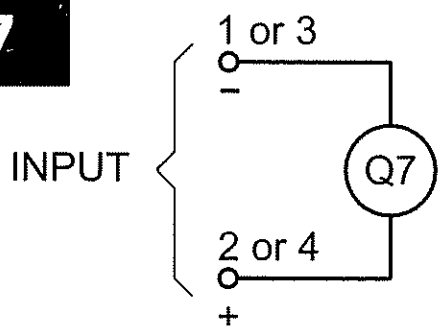

Remote Inhibit Transfer to Normal Circuit
Energize Q7 input to prevent transfer to Normal.

Q7 Input Modules:
K-1267, 120VAC INPUT (*Standard*)
K-1266, 24V (AC or DC) or 12VDC INPUT (*Optional*)

Katolight Service - Master Repair Manual - Page 4346

Installation - Optional Accessories *(cont'd)*

⚠ DANGER

HAZARDOUS VOLTAGE
(Can Cause Severe Injury or Death)

Turn OFF all power before installation, adjustment, or removal of transfer switch or any of its components.

Input Options Connections *(cont'd)*

R15/R15D

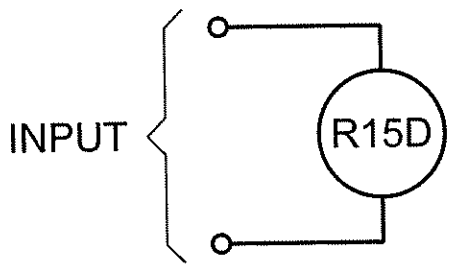

Load Shed
Input, that when energized, causes the unit to transfer out of the Emergency position. The customer can use this to prevent generator overload.

On a ***Standard*** transfer switch, the R15 will transfer the unit to a dead Normal.

On a ***Delay*** transfer switch, the R15D will transfer the unit to a neutral (open) position. (Unit will transfer to Normal if acceptable)

Q3 is used to keep the unit from transferring back to Emergency.

R15/R15D Relay:
K-1204, 120VAC *(Standard)*
K-1232, 24VAC; K-1242, 24VDC *(Optional)*

Communication Connections

ZNET200

Network card allows communication of ATS position, available source, timers running, etc. to a remote annunciator panel, PC or PLC via one pair of twisted wires. Connections located below P relay. Refer to labeling. Network cable to be Belden 8471, 16AWG (unshielded two conductor twisted pair, not included).

Katolight Service - Master Repair Manual - Page 4347

Programmable Options

These options are accessible through the LCD and keypad (see figure below). To become familiar with the options loaded into a particular unit, scrolling through the SET and CNFG menu will show the descriptions of the options (see page 11 and 12). These menus are the very same menus that are used to access the setting and/or configuration of these options. The SET (setting) menu is primarily used to show or change, time and voltage settings. The CNFG menu is primarily used to turn an option on or off. When scrolling through these menus, no changes can be made without entry of the access code. The factory set six-digit access code is located on a white label on the back of the unit (see figure 1).

The MX200 has many logic options. Each controller is downloaded with options at the time of manufacture. The collection of options that any one controller has is specified at the time of order placement. The following pages include all the options that can reside in the controller. Not all units include all options.

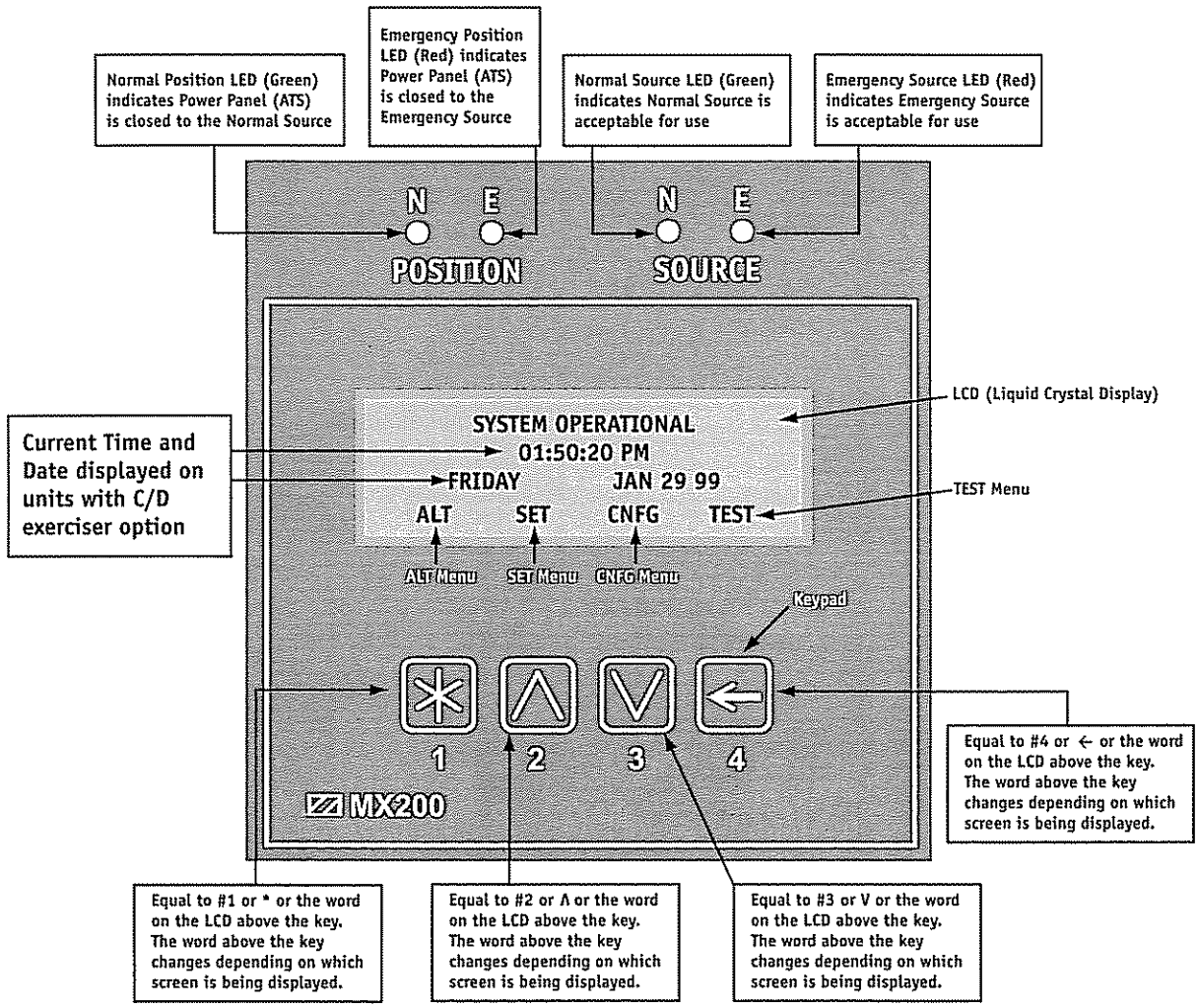

Katolight Service - Master Repair Manual - Page 4348

User Settings - SET Menu

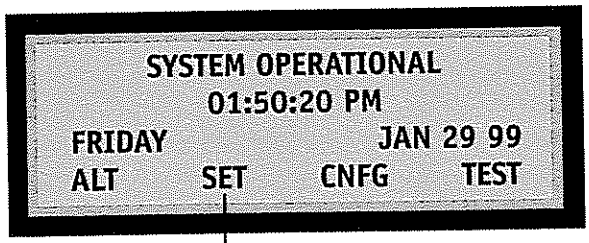

- ✳ SYSTEM CLOCK (pg. 14)
- ✳ EXERCISER EVENTS (pg. 15)
- N PICKUP VOLTAGE (pg. 22)
- N DROPOUT VOLTAGE (pg. 22)
- N PICKUP FREQ (pg. 22)
- E PICKUP VOLTAGE (pg. 23)
- E DROPOUT VOLTAGE (pg. 23)
- E PICKUP FREQ (pg. 23)
- ENG START DELAY (pg. 18)
- ✳ DELAY TO EMERG PRE SIGNAL (pgs. 19-20)
- ✳ EMERG PRE SIGNAL (pgs. 19-20)
- ✳ DELAY TO OPEN NORMAL (pgs. 18 and 20)
- DELAY TO EMERG (pgs. 18 and 20)
- DELAY TO NORMAL (pgs. 18 and 20)
- ✳ DELAY TO NORMAL PRE SIGNAL
- ✳ NORMAL PRE SIGNAL (pgs. 19-20)
- ✳ DELAY TO EMERG OPEN (pgs. 18-20)
- ENG STOP DELAY (pgs. 18 and 20)
- CALIBRATE NORMAL
- CALIBRATE EMERGENCY

✻ optional

Change adjustable values through keypad via SET menu.

Key stroke (SET ^ 2) (SELECT ^ v 2 3) scroll to accessory description to be changed, then (SET ← 4).

Enter six-digit access code (******)♦

(SET ← 4) (SELECT ^ v 2 3) scroll to choose New Value

(STORE ← 4) this will be repeated for each digit to be set then (BACK * 1) to get out of SET screens and save your changes.

♦ The factory assigned six-digit access code is located on the white label on the back of the controller (see figure 1).

Katolight Service - Master Repair Manual - Page 4349

User Settings - CNFG Menu

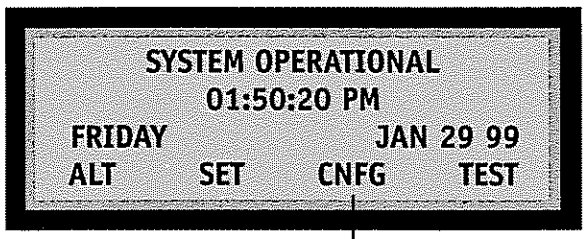

- ✳ N OVER VOLTAGE (pg. 22)
- ✳ N UNDER FREQ (pg. 22)
- ✳ N OVER FREQ (pg. 22)
- ✳ E OVER VOLTAGE (pg. 23)
- ✳ E OVER FREQ (pg. 23)
- ✳ IN PHASE MONITOR (pg. 21)
- TRANSFER COMMIT (pg. 26)
- ✳ EXERCISER (pgs. 15-17)
- TEST MENU KEY
- DATE STYLE
- ✳ CONFIG NO TRANSFER (pg. 21) (Phase Rotation)

Turn options ON or OFF via keypad through the CNFG menu.

Key stroke (CNFG ∨ 3) (SELECT ∧ 2 ∨ 3) scroll to accessory description then (CNFG ← 4)

enter six-digit access code (******)♦

(CNFG ← 4) (∨ 3) scroll to ON or OFF

(STORE ← 4) (BACK * 1) to get out of CNFG screen and save changes.

♦ The factory assigned six-digit access code is located on the white label on the back of the controller (see figure 1).

✳ optional

Katolight Service - Master Repair Manual - Page 4350

User Settings - ALT Menu

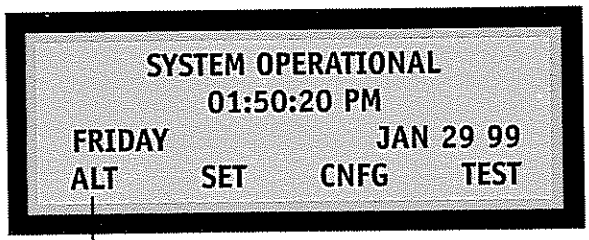

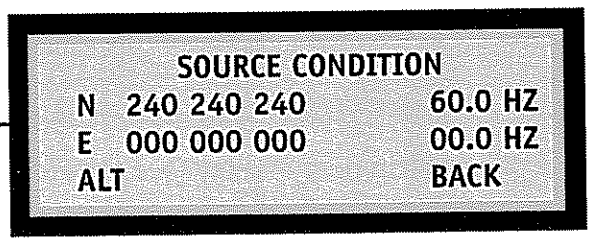

This screen displays line to line voltage values of both sources (A to B, B to C and A to C). Frequency of both sources is also displayed. Display will remain once selected, until transfer occurs. This is an alternate main screen.



This screen provides a lamp test. Pressing (TEST ← 4) key will test LEDs above screen. This display will revert back to SYSTEM OPERATIONAL after 5 seconds.

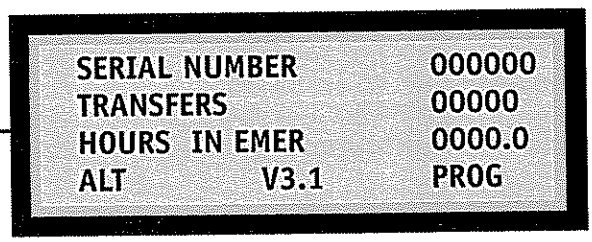

This screen provides:

SERIAL NUMBER of the transfer switch unique to each switch.
TRANSFERS is a count of how many times the unit has transferred to Emergency (Total).
HOURS IN EMER is a running total of hours the unit has provided Emergency to the load.
V# is the software version number.

Katolight Service - Master Repair Manual - Page 4351

How to Set the System Clock

Set **SYSTEM CLOCK**, time and date:

- Only controllers with the Plant exerciser (C/D) option will show a system clock.
- When the controller does not have this option, the second and third line of the display will be blank during **SYSTEM OPERATIONAL** screen.
- When the clock is present but not set, the display will show **SET SYSTEM CLOCK** on the second line of the **SYSTEM OPERATIONAL** screen.
- The **SYSTEM OPERATIONAL** screen will show time (hours, minutes and seconds) on the second line if the system clock has been set. (Date on third line)

Set the system clock via the SET menu: (Start from **SYSTEM OPERATIONAL** screen)

* 1. Remove battery protective white plastic strip near P relay (see figure 1)
2. Press **SET**
3. Scroll to **SET SYSTEM CLOCK** using the up and down keys (SELECT)
4. Press **SET**
5. **ENTER ACCESS CODE** located on the white label on the back of the controller (see figure 1)
6. Press **SET**
7. Use the up and down keys to change the hour value (AM or PM is also selected)
8. Press **STORE** (this will enter this value and move cursor to minutes)
9. Use the up and down keys to change the minutes
10. Press **STORE** (this will enter this value and move cursor to month)
11. Use the up and down keys to change the month
12. Press **STORE** (this will enter this value and move cursor to date)
13. Use the up and down keys to change the date
14. Press **STORE** (this will enter this value and move cursor to year)
15. Use the up and down keys to change year
16. Press **STORE** (this will enter this value and complete the clock setting)
17. To edit settings, press **SET** and repeat steps 6 - 16
18. If the setting is satisfactory, press BACK (unit then returns to the **SYSTEM OPERATIONAL** screen)

* *Replacement battery Part # K-4100*
Battery will last 5 years and provides power to retain clock function only
(Controller functions without battery)

Katolight Service - Master Repair Manual - Page 4352

How to Set the Plant Exerciser C/D

- Units equipped with this option will display the time of day on second line of **SYSTEM OPERATIONAL** screen (if time is correct, go to step one; if not, see page 14 "How to Set the System Clock").
- When the second line displays **SET SYSTEM CLOCK** the unit is equipped with the exerciser option, but the **SYSTEM CLOCK** has not been set. **SYSTEM CLOCK** must be set before proceeding (see page 14 "How to Set the System Clock").
- When a unit is not equipped with this option, the second and third line of the **SYSTEM OPERATIONAL** screen will be blank (Plant Exerciser option is not installed).

Verify the Exerciser is on with the following:

1. Beginning from the **SYSTEM OPERATIONAL** screen, press **CNFG**
2. Using up and down keys, scroll to **CONFIG EXERCISER** screen
3. The lower right-hand corner (above **CNFG**) will show on or off
4. If **on**: press **BACK** and skip to step 12
5. If **off**: continue
6. Press **CNFG**
7. Enter **ACCESS CODE** located on white label on the back of the controller (see figure 1)
8. Press **CNFG**
9. Select "**on**" using up and down keys
10. Press **STORE**
11. Press **BACK** to return the **SYSTEM OPERATIONAL** screen.

Set the **PLANT EXERCISER** via the **SET** menu after verifying the unit is equipped with this option and it is turned on as per above:

12. Beginning from the **SYSTEM OPERATIONAL** screen, press **SET**
13. Using up and down keys, scroll to **SET PLANT EXERCISER** screen (if this screen cannot be found begin at the top of the page)
14. Press **SET**
15. Enter **ACCESS CODE** located on white label on the back of the controller (see figure 1)
16. Press **SET**
17. The **SET 1WEEK EXER** screen is now displayed (refer to page 16 and 17 to verify type of exerciser installed; 1WEEK, 2WEEK, DAILY OR CLNDR)
18. Press **SET** again
19. Cursor is indicated as a line under character to be changed, move cursor via **STORE** key
20. Change values with up and down keys, press **STORE** after each entry (test duration is hours and minutes)
21. Press **STORE** when complete, until **SAVING RECORD** is displayed
22. Press **BACK** twice when done to return to the **SYSTEM OPERATIONAL** screen.

Katolight Service - Master Repair Manual - Page 4353

Exerciser Types

Units equipped with the Exerciser Option require that the System Clock be set first. (see page 14)

Daily Exerciser

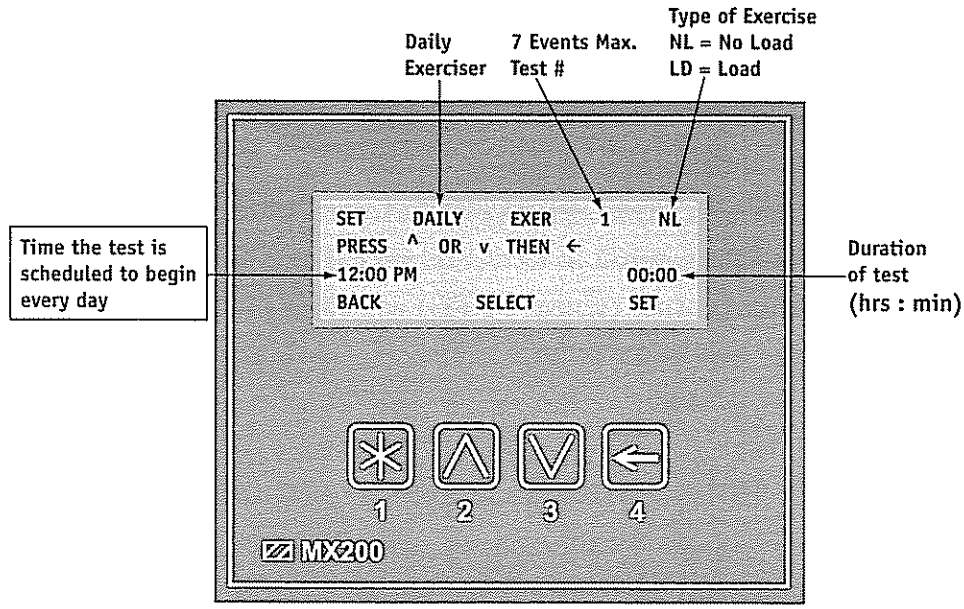

1 Week Exerciser

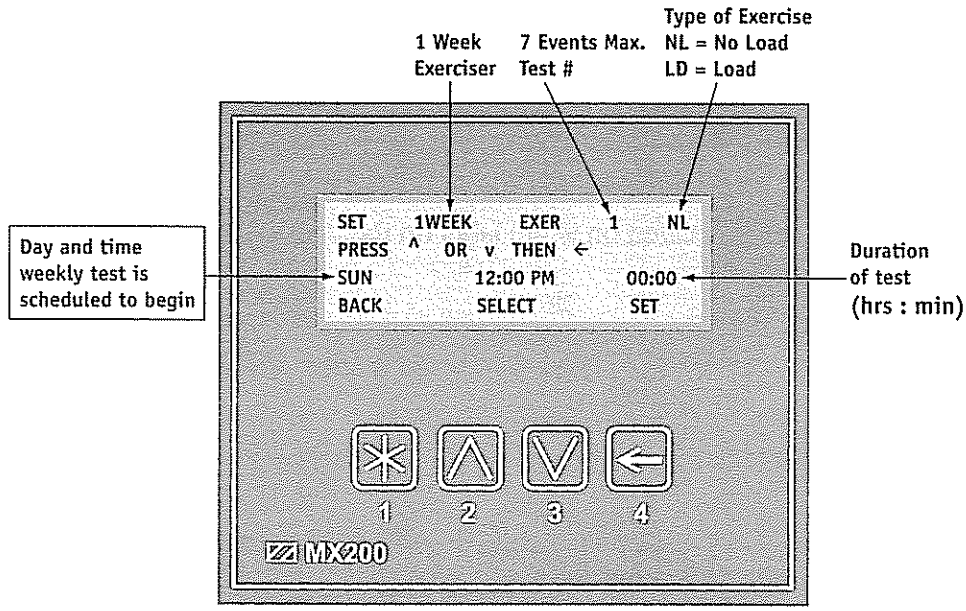

Katolight Service - Master Repair Manual - Page 4354

2 Week Exerciser

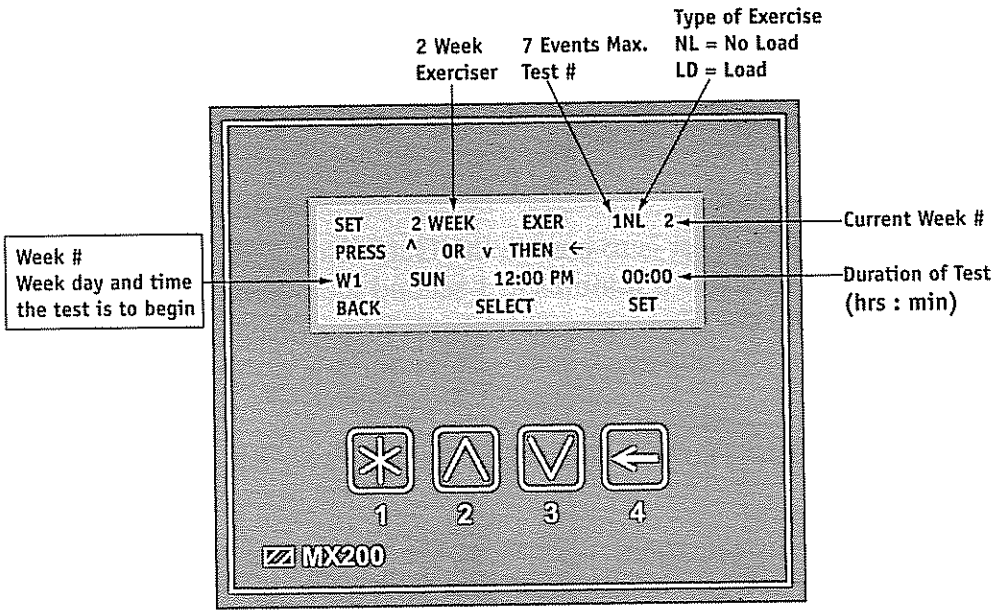

365 Day Calendar Exerciser

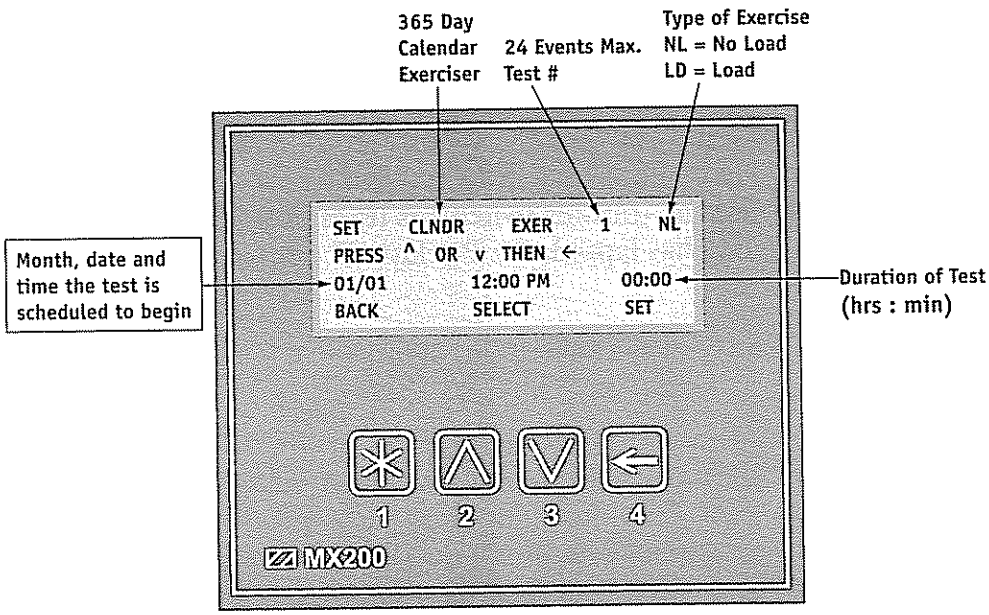

Katolight Service - Master Repair Manual - Page 4355

Timers

P (Engine Start Timer)

adjust via SET menu *(see page 11)*

Factory default 3 seconds

- The purpose of this timer is to ensure that the transfer switch does not start the engine when the Normal power outage is very short.
- The P time range is 0 to 10 seconds in 1/10 of a second increments.
- Timer begins when the Normal fails to meet adjusted parameters.
- When the time setting has lapsed, P relay contacts will operate to start engine (DPDT).

W (Transfer to Emergency Timer)

adjust via SET menu *(see page 11)*

Factory default 1 second

- The purpose of this timer is to ensure the Generator is stable before transfer.
- The W time range is 0 to 5 minutes in 1 second increments.
- Timer begins once the Generator output satisfies adjusted parameters.
- When time setting has lapsed, transfer to Generator will be initiated.

T (Transfer to Normal Timer)

adjust via SET menu *(see page 11)*

Factory default 30 minutes

- The purpose of this timer is to verify that the Normal source has consistently met the sensor parameters for a minimum duration.
- The T time range is 0 to 60 minutes in 1 second increments.
- The T timer begins when Normal satisfies sensor parameters.
- When the timer setting has lapsed, retransfer back to Normal will be initiated. (Timer bypassed upon Emergency failure)

U (Engine Cool Down Timer)

adjust via SET menu *(see page 11)*

Factory default 5 minutes

- The purpose of this timer is to run the Generator unloaded prior to stop.
- The time range is 0 to 60 minutes in 1 second increments.
- The timer begins once the transfer switch has transferred to Normal.
- When the timer setting has lapsed, the P relay will operate to stop engine.

DT/DW (Open Delay Timers)

adjust via SET menu *(see page 11)*

Factory default 5 seconds

- Both DT and DW are center position timers for Delay style ATS Power Panels.
- The purpose of these timers is to control the center off position of delay power panels to allow the back EMF of the load to decay before re-energizing the load.
- These timers have a range of 0 to 10 minutes in increments of one second.
- DT controls how long the ATS stays open when transferring from Emergency to Normal.
- DW controls how long the ATS stays open when transferring from Normal to Emergency.

Katolight Service - Master Repair Manual - Page 4356

T3/W3, A6 and A62 (Pre-signal Timers)

adjust via SET menu *(see page 11)*
output connection *(see page 5-7)*

Factory default 20 seconds

* ■ Both T3 and W3 are pre-signal timers.
  - ■ The purpose of these timers is to provide an output prior to transfer.
  - ■ These outputs are provided to coordinate building systems preparedness for the impending interruption that will occur when transferring from one live source to another.
  - ■ These timers have a range of 0 to 60 seconds in increments of one second.
  - ■ Output is relay contacts (DPDT).
  - ■ T3 takes place prior to transfer to Normal and W3 takes place prior to transfer to Emergency.
  - ■ These timers are bypassed when transferring from a dead source (power outage).
  - ■ Outputs from these timers are commonly used in conjunction with elevators and UPS systems.

Example: A five second T3 timer setting will give a relay output of a 5 second duration, during the last 5 seconds prior to transferring to the Normal source. Once the ATS is in the Normal position, the T3 signal is terminated.

Note: The operation of T3 time is added to the T time (T+T3 = transfer delay to Normal). Both T and T3 are canceled if the generator fails during transfer delay. The operation of W3 time is added to the W time (W+W3 = transfer delay to Emergency). W3 is canceled during Normal power loss transfer to Emergency. W3 is only active during testing. W timer is always used when transferring to Emergency.

* ■ **A6** provides contact pre-signal in both directions and is normally closed.
  - ■ **A6** utilizes T3/W3 timers to provide pre-signal time setting. This option is configured without the dead source bypassing feature utilized on the standard T3/W3 operating scheme.

* ■ **A62** option utilizes independent external timers to sequence contact outputs after transfer. These contacts are normally closed contacts that open prior to transfer in both directions (pre-signal duration determined by T3/W3 setting) and re-close in sequence after the transfer is complete (determined by the external timers designated T61, T62, T63...).
  - ■ **A62** option is commonly used to shed multiple motor loads prior to transfer and sequentially add these loads after transfer is complete. This option is configured without the bypassing feature utilized on the standard T3/W3 operating scheme.

* optional

Katolight Service - Master Repair Manual - Page 4357

Timer Designations

Timer Designations as they appear in the SET menu

ATS Type	P	W	W3 (A6)	DW	T	T3 (A6)	DT	U
Standard ATS	ENG. START DELAY	TO EMERGENCY	⟶	⟶	TO NORMAL	⟶	⟶	ENG. STOP DELAY
Standard ATS with pre-signal option; T3/W3, A6 or A62	ENG. START DELAY	TO PRESIGNAL	EMERGENCY PRESIGNAL	⟶	TO N-PRE	NORMAL PRESIGNAL	⟶	ENG. STOP DELAY
Delay ATS	ENG. START DELAY	TO OPEN N	⟶	TO EMERGENCY	TO OPEN E	⟶	TO NORMAL	ENG. STOP DELAY
Delay ATS with pre-signal option; T3/W3, A6 or A62	ENG. START DELAY	TO E-PRE	TO OPEN N	TO EMERGENCY	TO N-PRE	TO OPEN E	TO NORMAL	ENG. STOP DELAY
NORMAL FAILS ⟵		TRANSFER TO EMERGENCY ⟵		NORMAL RETURNS ⟶		TRANSFER TO NORMAL ⟵		ENGINE COOLDOWN ⟵

Katolight Service - Master Repair Manual - Page 4358

* R50 (In Phase Monitor)

can be turned on or off via CNFG menu *(see page 12)*

Factory default off

- This feature restricts ***live source to live source transfers*** to occur only when sources are within 7 electrical degrees or less of each other (***Live source to live source transfers*** usually occur during transfer back to Normal or testing).
- R50 does not change the operation of the ATS in a power failure mode.
- R50 operation occurs after all timer functions have lapsed.
- Once the transfer timers have lapsed, the CHECKING FOR SOURCE SYNCHRONISM will be displayed.
- Transfer will then take place once the sources come into sync.
- In the event that the sources do not come within 7 electrical degrees of each other, within 60 seconds the unit will display the message: SYNCH CHECKING PRESS ← TO BYPASS.
- If ← is pressed at this point, the following will be displayed: WARNING PRESSING ← MAY CAUSE DAMAGE TO LOAD DUE TO OUT OF PHASE TRANSFER. Pressing ← again will then actually bypass the R50.
- Since this is a passive device the amount of time that it takes to sync is dependent on the frequency difference between the two sources.
- The Normal source is usually a utility and the frequency is not within the control of the consumer. The Emergency source needs to be adjusted to create an adequate difference in order for the transfer to happen in a timely fashion.

  Note: **For optimum performance the generator should be adjusted maximum 2 Hertz above or below the utility frequency, minimum .1 Hertz different (58 to 59.9) or (60.1 to 62) Hertz** *(adjustment of generator to 60.0 hz will cause lengthy transfer delay).*

* R16 (Phase Sequencing/Rotation)

can be turned on or off via CNFG menu *(see page 12)*

Factory default on

This feature prevents ***live source to live source transfers*** from occurring between dissimilar phase sequences. This condition is primarily caused by an installation error. Connections from the Normal and Emergency need to be verified, compared and corrected to remedy the inconsistent phase rotation between the two sources.

WARNING: Turning off this option can cause severe damage to loads.

* optional

Katolight Service - Master Repair Manual - Page 4359

Normal Sensors

Pick Up Voltage

Factory Default: 90%

This adjustment determines the minimum acceptable voltage required to transfer to Normal. Adjust via the SET menu. Range is 85 to 100% in 1% increments *(see page 11)*. Once satisfied, the T timer will begin timing to transfer to Normal.

Pick Up Frequency

Factory Default: 95%

This adjustment determines the minimum acceptable frequency required to transfer to Normal. Adjust via the SET menu. Range is 90 to 100% in 1% increments *(see page 11)*. Once satisfied, the T timer will begin timing to transfer to Normal.

Drop Out Voltage

Factory Default: 80%

This adjustment determines the low voltage threshold. Adjust via the SET menu. Range is 75 to 98% in 1% increments *(see page 11)*. Drop out must be a minimum of 2% below pickup setting. Once voltage falls below threshold, P timer begins timing to signal generator to start.

* *Over Voltage (R1)*

This feature, when on, provides a maximum voltage threshold at 110% of nominal system voltage. Turn on or off via CNFG menu *(see page 12)*. Once threshold is exceeded, P timer begins timing to signal generator to start.

* *Under Frequency (J1N)*

This feature, when on, provides a minimum frequency threshold at 2Hz below pick up frequency. Turn on or off via the CNFG menu *(see page 12)*. Once the frequency drops below this threshold for more than 5 seconds, the P timer will begin timing to signal the generator to start.

* *Over Frequency (J2N)*

This feature, when on, provides a maximum frequency threshold of 2 Hz above nominal frequency. Turn on or off via CNFG menu *(see page 12)*. Once frequency exceeds threshold, P timer begins timing to signal generator to start.

* optional

Katolight Service - Master Repair Manual - Page 4360

Pick Up Voltage

Factory Default: 90%

This adjustment determines the minimum acceptable voltage. Adjust via the SET menu. Range is 85 to 100% in 1% increments *(see page 11)*. Once satisfied, the W timer will begin timing to transfer to Emergency.

Pick Up Frequency

Factory Default: 95%

This adjustment determines the minimum acceptable frequency. Adjust via the SET menu. Range is 90 to 100% in 1% increments *(see page 11)*. Once satisfied, the W timer will begin timing to transfer to Emergency.

Drop Out Voltage

Factory Default: 80%

This adjustment determines the low voltage threshold. Adjust via the SET menu. Range is 75 to 98% in 1% increments *(see page 11)*. Drop out must be a minimum of 2% below pickup setting. Once the voltage falls below this threshold, the T timer will be bypassed to expedite the transfer to Normal.

* *Over Voltage (R8)*

This feature, when on, provides a maximum voltage threshold at 110% of nominal voltage. Turn on or off via the CNFG menu *(see page 12)*. Once this threshold is exceeded, the T timer will be bypassed to expedite the transfer to Normal.

* *Over Frequency (J2E)*

This feature, when on, provides a maximum frequency threshold of 2Hz above of nominal frequency. Turn on or off via the CNFG menu *(see page 12)*. Once the frequency exceeds this threshold, the T timer will be bypassed to expedite the transfer to Normal.

Under Frequency

This feature provides a minimum frequency threshold at 2Hz below pick up frequency. Once the frequency drops below this threshold, if sustained for more than 5 seconds, the T timer will be bypassed to expedite the transfer to Normal.

* optional

Katolight Service - Master Repair Manual - Page 4361

Optional Pilot Devices

Door Mounted Options

The S options are usually options related to a manually operated switch mounted on the door of the enclosure, which provides access to a feature or function.

S1

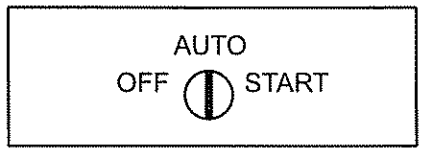

Selector Switch

Provides start-stop control of the engine from the transfer switch panel.

AUTO Position provides Normal operation of the transfer switch and the engine.

OFF Position disconnects the transfer switch start contact from the engine. Then engine can only be started manually in this position.

START Position closes the circuit to the engine, causing it to start and run until the switch is moved from the start position.

S2

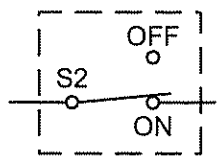

Engine Disconnect Switch

Interrupts the engine start circuit when in the "OFF" position.

Katolight Service - Master Repair Manual - Page 4362

S5

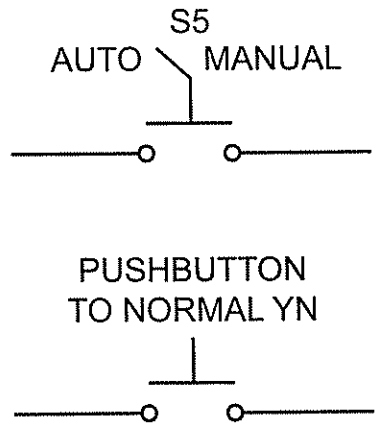

Auto/Manual Retransfer Selector Switch

In **AUTO**, retransfer to Normal is Automatic after T timer times out. T time delay is bypassed if Emergency fails.

In **MANUAL**, retransfer to Normal occurs upon manual depression of YN or if Emergency fails.

S12

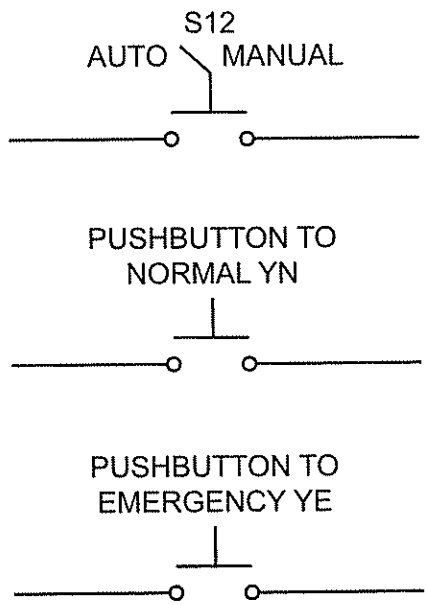

Auto/Manual Selector Switch

When the S12 is in the AUTO position, the Automatic Transfer Switch functions automatically as specified with the switch drawing.

When the S12 Switch is in the MANUAL position, the Automatic Transfer Switch will transfer either direction only by depression of Normal (YN) or Emergency (YE) Pushbutton.

NOTE:	When in MANUAL, the switch maintains position, even if the selected power fails.

Katolight Service - Master Repair Manual - Page 4363

S13 Transfer Commit

(this feature is standard)

can be turned on or off via CNFG menu *(see page 12)*

When the Transfer commit is set to the Y (Yes) position

- The ATS is committed to transfer to the Emergency position once the W timer has begun timing, even if Normal returns before the transfer to Emergency occurs.
- This is to ensure that the transfer takes place, because one outage is often followed by another.

When the transfer commit is set to N (No) position (factory default)

- The ATS is not committed to transfer unless the outage duration is longer than the timers that precede the transfer to the Emergency position.
- This assumes that the outage will be an isolated event.

S14 Test Switch, Three Position, Key Operated (Spring Return to Center)

Holding the Selector Switch in **TEST** will transfer the ATS to Emergency. Releasing the switch (to **AUTO** position) will return the ATS to Normal through the **T** timer function.

Holding the Selector Switch in **YN** Normal position will bypass the **T** timer and immediately transfer the ATS back to Normal. Releasing the Selector Switch allows the Selector Switch to return to **AUTO** position.

Katolight Service - Master Repair Manual - Page 4364

Testing

⚠ NOTICE

A periodic test of the transfer switch under load conditions is recommended to insure proper operation. (See National Electric Code articles 700 and 701).

Start generator and verify proper voltage, frequency and phase sequence (match to Normal). Shut down gen set and place in Auto. Complete the visual inspection of the transfer switch, and close the cabinet door.

Initiate the test by pressing the TEST button on the LCD keypad. The controller will then prompt for your access code (as shown on Figure 1). After entering the code, three test options will appear—STD LOAD, FAST LOAD and NO LOAD (See Figure 3).

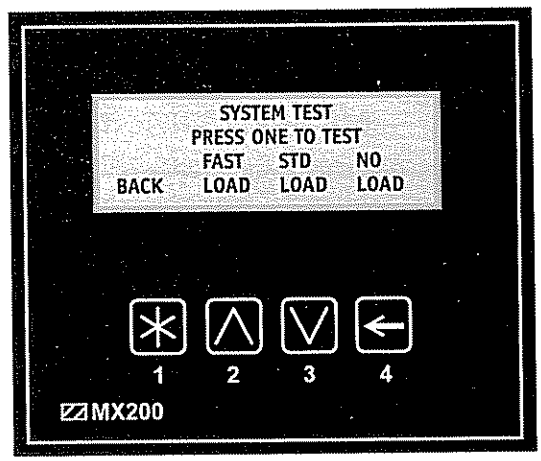

Figure 3

- **STD LOAD** test starts the generator and using the current timer settings, transfers the load to the Emergency source.
- **FAST LOAD** test presets timer values to a maximum 30 seconds during the test. After completion of the test, all timers are reset to their original values. (T3, W3, DT and DW remain)
- **NO LOAD** test starts the generator but does not transfer the load to the Emergency source. Press and hold the desired test option button until the switch transfers to the Emergency source (load test) or until the generator has been run for the desired amount of time (no load test). Releasing the test button before W timer timeout will abort the test (Exception: see transfer commit option, page 26).

When the test is initiated, the controller first starts the P timer. Upon completion of the P time delay, an engine start signal is sent. After Emergency has reached preset levels, the W timer begins its timing cycle. This timer is used to ensure the voltage and frequency of Emergency has stabilized before transfer. If either the voltage or frequency of Emergency fall below preset limits the test will be terminated, and the U timer will time out. If the voltage and frequency remain within preset limits for the duration of the W time delay, the transfer switch will close into the Emergency source.

Deactivating the test switch initiates retransfer to the Normal source. The switch will retransfer after the time delay of the T timer. This timer is used to ensure that the Normal source is stable before retransfer. Immediately after retransfer, the U timer begins its timing cycle. The U timer is the engine cool down timer which allows the engine generator to run unloaded.

NOTE: Only the P timer is used during the no load test.

Katolight Service - Master Repair Manual - Page 4365

Troubleshooting

Before beginning any troubleshooting activity, refer to the information package supplied with the transfer switch and review the description and operation of all accessories supplied. Also refer to the Installation section of this manual.

Engine Does Not START

Annunciation	Possible Cause	Corrective Action
EMERGENCY AVAILABLE LED off	Engine start wires not terminated properly	Check Engine Start Connections
	Generator in "OFF" position	Investigate why Engine Control Switch was turned off

Engine Does Not STOP

Annunciation	Possible Cause	Corrective Action
LCD Display - "Delay to Engine Stop"	**U** timing cycle not complete	Check **U** Timer setting
NORMAL POSITION, and NORMAL and EMERGENCY AVAILABLE LEDs on, but U timer has timed out	Engine start wires not terminated correctly	Check Engine Start Connections
	Generator in "Manual"	Put generator in "Auto"

ATS Will Not Transfer To EMERGENCY

Annunciation	Possible Cause	Corrective Action
EMERGENCY AVAILABLE LED off	Emergency voltage or frequency not within acceptable parameters	Check Engine Start Connections, Generator Breaker, Generator output, and Engine Control Switch
None	Power supply connector unplugged	Plug in connector
LCD Display - "Mechanical Failure"	Limit switch or RT box connector unplugged	Plug in connector
LCD Display - "Delay to Emergency"	**W** timing cycle not complete	Check **W** Timer setting

ATS Will Not Transfer To NORMAL

Annunciation	Possible Cause	Corrective Action
NORMAL AVAILABLE LED off	Normal voltage or frequency not within acceptable parameters	Check utility and utility breakers
None	Power supply connector unplugged	Plug in connector
LCD Display - "Mechanical Failure"	Limit switch or RT box connector unplugged	Plug in connector
LCD Display - "Delay to Normal"	**T** timing cycle not complete	Check **T** Timer setting

Katolight Service - Master Repair Manual - Page 4366

Power Failure Sequence of Operation

LEDs Green - Green

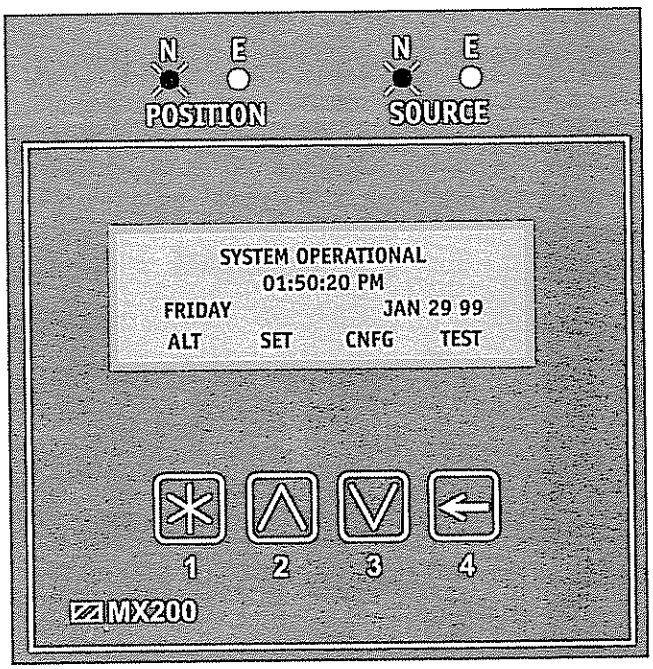

Normal Source Available

ATS Normal Position

LEDs OFF

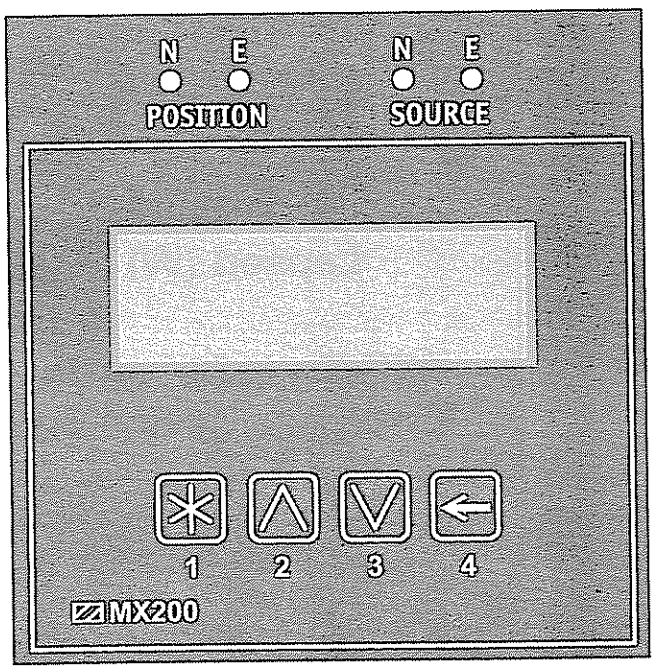

Normal Source Failed

Engine Starts After ENG START DELAY (P) (No Power Available)

Katolight Service - Master Repair Manual - Page 4367

Power Failure Sequence of Operation *(cont'd)*

LEDs Green - Red

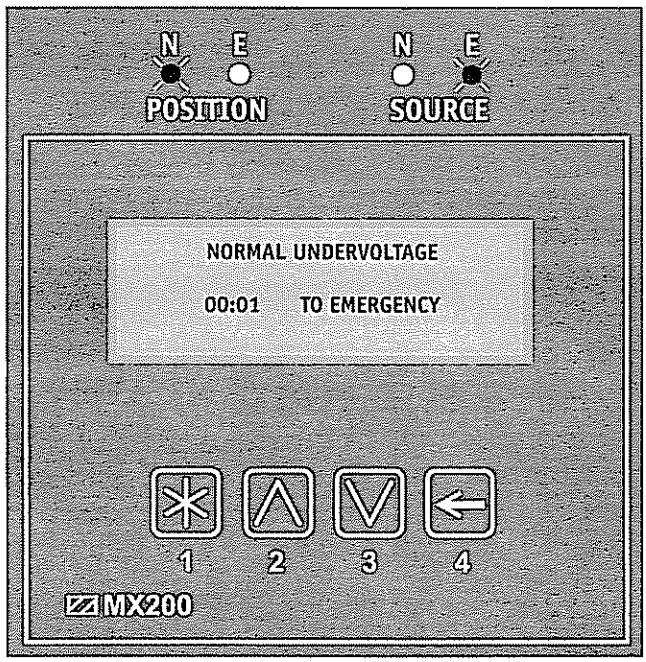

ENG START DELAY Lapsed

Emergency Source Available

Transfer TO EMERGENCY Timing (W)

LEDs Red - Red

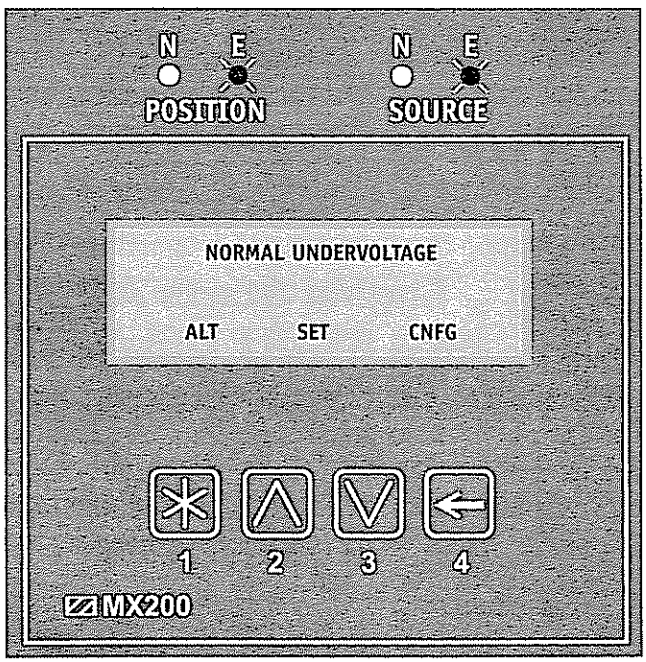

TO EMERGENCY Lapsed (W)

ATS Transferred to Emergency Position

Katolight Service - Master Repair Manual - Page 4368

Power Failure Sequence of Operation *(cont'd)*

LEDs Red - Green - Red

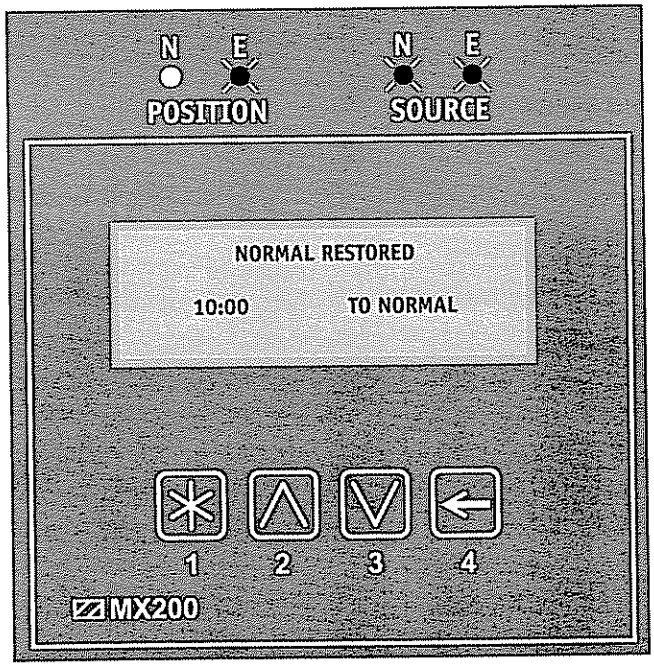

Normal Source Returned

TO NORMAL Timing (T)

LEDs Green - Green - Red

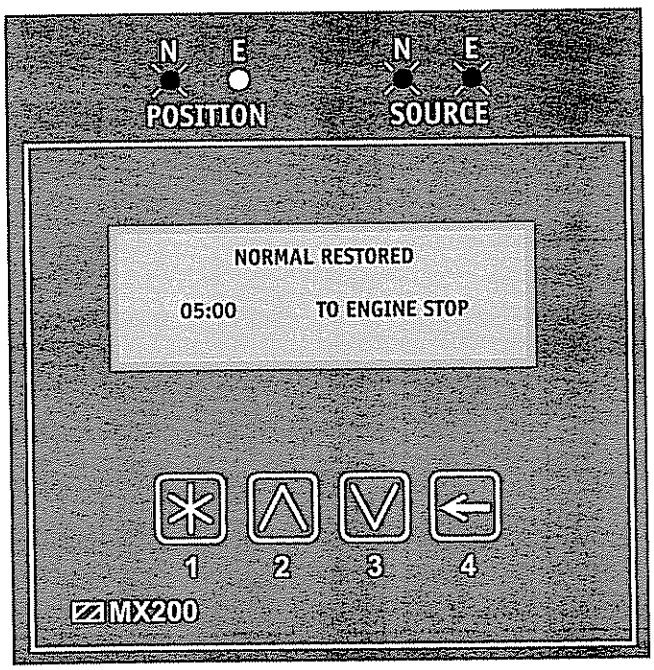

Transfer TO NORMAL Lapsed (T)

ATS Transferred to Normal Position

Once ENGINE STOP is complete, return to Screen #1

Katolight Service - Master Repair Manual - Page 4369

Index of Terms

Term	Definition	Page
A1	Normal Availability output relay contact	4
A1E	Emergency Availability output relay contact	4
A3	Emergency position output contact	5
A4	Normal position output contact	5
A6	Pre-signal contact either direction	5
A62	A6 with sequential pick up after transfer	6
Access Code	Six numeric digit required for program changes	2 (figure 1)
ALT	Alternate Main Screen	13
ATS	Automatic Transfer Switch	
Aux. Panel	Auxiliary Control Panel	
Battery	Clock Battery K-4100	14
CNFG	Menu for configure parameters	12
D Type Switch	Transfer switch with an off position (3 position)	
DS	Disconnect Switch (located on Power Panel)	
DT	Delay Timer from open to Normal (D Type Switch)	18, 20
DW	Delay Timer from open to Emergency (D Type Switch)	18, 20
E	Emergency	
E-Contact	Engine Start output relay contact	3
Emergency	Alternate Power Plant / Engine Generator Set	
Exerciser Clock	Time clock for automatic generator test	15-17
Input	Voltage applied from a remote source	
J1N	Normal Under Frequency Sensor	22
J2E	Emergency Over Frequency Sensor	23
J2N	Normal Over Frequency Sensor	22
Keypad	User interface keys	10
LCD	Liquid Crystal Display	10
LED	Light Emitting Diode	10
MX200	Micro processor based controller	
N	Normal	
Normal	Utility power (preferred source)	
Output	Indication via dry contacts	3-7
P	Delay timer to Engine Start	18, 20
P2	Extended time range P	

Katolight Service - Master Repair Manual - Page 4370

Index of Terms

Term	Definition	Page
Pre-Signal	Signal prior to transfer	19, 20
Power Panel	Structure that transfers load between two sources of power	
Q2	Input for Remote Peak Shave/Test	8
Q3	Input to inhibit transfer to Emergency	8
Q7	Input to inhibit transfer to Normal	8
R1	Normal Over Voltage Sensor	22
R8	Emergency Over Voltage Sensor	23
R15 (load shed)	Input to transfer off Emergency to dead Normal	9
R15D (load shed)	Input to transfer off Emergency to open position (D Type Switch)	9
R16	Phase sequence sensor	21
R50	In phase monitor	21
Retransfer	Transfer back to Normal source	
RT box	Relay Transformer Box	2 (figure 1)
S1	Selector; Engine (OFF-AUTO-START)	24
S12	Selector; Automatic or Manual ATS	25
S13	Transfer Commit	26
S14	Selector; Test-Auto-YN	26
S2	Selector; Engine (OFF-ON)	24
S5	Selector; Auto or Manual retransfer	25
SET	Menu for Setting parameters	11
T	Delay timer to transfer to Normal	18, 20
T3	Pre-signal to Normal transfer timer	19, 20
Test	Simulated utility power outage	
Test Switch	Simulates utility power outage	
U	Engine cool down timer	18, 20
UPS	Uninterruptable Power Source	
W	Delay timer to transfer to Emergency	18, 20
W3	Pre-signal to Emergency transfer timer	19, 20
YE	Push button to Emergency	25
YN	Push button to Normal	25
ZNET200	Network communication card	9
ZTS	Zenith Transfer Switch	

Katolight Service - Master Repair Manual - Page 4371



830 West 40th Street
Chicago, IL 60609 USA

Phone: 773 247-6400
Fax: 773 247-7805

www.zenithcontrols.com
E-Mail: zenith@zenithcontrols.com

© 1998 Zenith Controls, Inc.

Entelli-Switch 250
Microprocessor Controller
Transfer Switch Control Panel

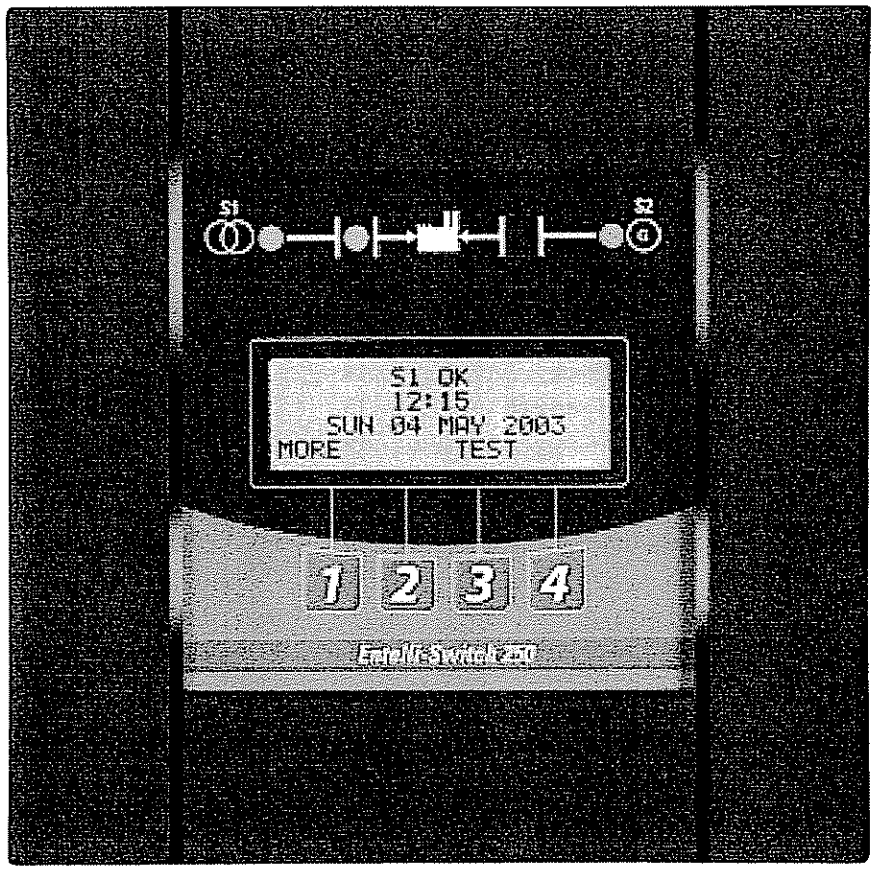

Katolight Service - Master Repair Manual - Page 4373

Authorized Service

For GE parts and service, call: (773) 299-6600

Table of Contents

	Page
Introduction	2
Safety	3
Equipment Inspection and Storage	3
Final Equipment Inspection	3
Installation	4
Engine Start Control Connections	4
Initial Energization	4-5
Control Connections	6
Entelli-Switch 250 Microprocessor Controller	7
Overview	7
LCD & Keypad	8
User Setting for Voltage & Frequency	9
Accessory Group Packages	10
Accessory Definitions	11-14
How to Set the System Clock	14
CDT One Event Timer Exerciser	15
CDP Clock Exerciser	16
User Setup - CFG Menu	17
User Setup - SET Menu	18
User Setup - System Info	19
Testing	20
Introduction	20
Test Options	20
Standard Transition	21
Delayed Transition	21
Closed Transition	22
Emergency Service Procedure for Extended Parallel Time	23
Sequence of Operation	24
Standard Transition	24
Delayed Transition	24
Closed Transition	25
Relay/Transformer (R/T Box)	26
Standard	26
Delay	27
Schematics	28
Troubleshooting & Diagnostics	29
Maintenance and Testing	30
Inspection and Cleaning	30
Servicing	30
Testing	30

Introduction

GE Zenith Transfer Switches are used to provide a continuous source of power for lighting and other critical loads by automatically transferring from source 1 power to source 2 power in the event that source 1 voltage falls below preset limits.

Voltage sensing and system control is performed via a state-of-the-art microcontroller located on the cabinet door. It is designed to give highly accurate control of the transfer switch system.

All GE Zenith transfer switches are designed for use on emergency or standby systems, and are rated for total system or motor loads. Transfer switches are UL Listed under Standard 1008 and CSA Certified under Standard C22.2 No. 178 and IEC Listed under Standard 947.

NOTES: A protective device such as a molded case circuit breaker or fused disconnect switch MUST be installed on both sources of incoming power for circuit protection and as a disconnection device.

All references made within this manual about the term "S1" or "Source 1" relate to a Normal Power Source. All references made about the term "S2" or "Source 2" relate to an Emergency or Alternative Power Source.

⚠ DANGER ⚠

HAZARDOUS VOLTAGE
(Can Cause Severe Injury or Death)

Turn OFF all power before installation, adjustment, or removal of transfer switch or any of its components.

The safe operation of your switch is GE Zenith's focus. The proper storage, installation, operation and maintenance will help increase the life of the switch.

⚠ CAUTION ⚠

Due to hazardous voltage and current, GE Zenith recommends that a GE Zenith Certified technician or a qualified electrician must perform the installation and maintenance of the switch.

Equipment Inspection and Storage

Once you have received the transfer switch, inspect it for any damage. This includes damage to the enclosure, power panel, control panel and wiring harness. If any damage is found or suspected, file a claim as soon as possible with the carrier and notify the nearest GE Zenith representative.

Before installation, if it is necessary, store the transfer switch in a clean dry place, protected from dirt and water. Provide ample air circulation and heat, if necessary, to prevent condensation.

Storage Temperature	Operating Temperature (Ambient):	Humidity
-30°C to +75°C (-22°F to +167°F)	**40-400 AMP** *(molded shell)* -20°C to +65°C (-4°F to +149°F) **40-4000 AMP** *(all other frame and panel types)* -20°C to +60°C (-4°F to +140°F)	5% to 95% (non-condensing)

Table 1

Final Equipment Inspection

Prior to energizing the transfer switch:

1. Remove any debris incurred, with a vacuum, due to shipment or installation.
2. Verify that all cabled connections are correct and that phase rotation of both sources match.
3. Check engine start connections.
4. Verify the correct connection of all control wires.
5. Check settings of all timers and adjust as necessary.
6. Adjust any optional accessories as required.
7. Check the lug torque values of the power connections.

   NOTE: Lug torque values are specified in the power panel manual.

8. Make sure that all covers and barriers are installed and properly fastened.

   NOTE: Power panels ship from GE Zenith in Source 1 Position.

⚠ WARNING ⚠

Do not use a blower since debris may become lodged in the electrical and mechanical components and cause damage.

Each GE Zenith transfer switch is factory wired and tested. A complete information package is furnished with each switch which includes:

a. Sequence of operation.
b. Description and operation of all accessories supplied.
c. Power panel connection diagram and schematic.
d. Description and identification of all customer field connections.

Installation of GE Zenith transfer switches includes:

a. Mounting the transfer switch cabinet.
b. Connection of Source 1, Source 2, and Load cables or bus bars.
c. Connection of external control circuits as required.

Katolight Service - Master Repair Manual - Page 4375

⚠ DANGER ⚠

HAZARDOUS VOLTAGE
(Can Cause Severe Injury or Death)

Turn OFF all power before installation, adjustment, or removal of transfer switch or any of its components.

E

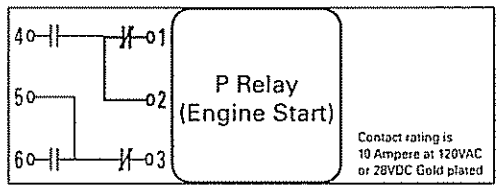

Figure 1

Engine Start Control Connections

The engine-start terminals are clearly identified by a label on the microcontroller backplate. In the case of manual transfer switches, or in other applications not requiring the microprocessor, clearly marked terminal blocks are provided in the upper left corner of the control panel for the engine start control wires.

Figure 2 shows location of engine start connections for Bypass Isolation Transfer Switch. Figure 5 (pg.6) shows location of engine start connections for Automatic Transfer Switch.

Terminals for field connections to the A3 Source 2 auxiliary contacts and the A4 Source 1 auxiliary contacts are also provided. These terminals are clearly marked and appear on the side of the power panel. On 400 amp metal frame units these terminals appear on the bracket above the operator handle.

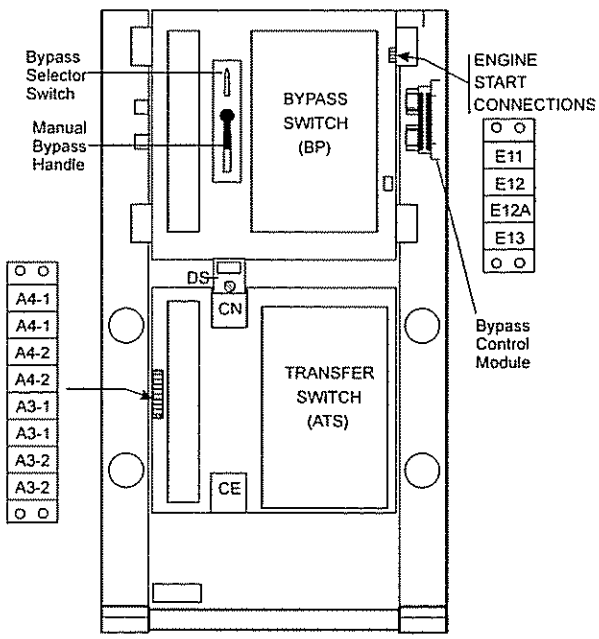

Figure 2 (Typical)

Initial Energization

Before proceeding, refer to the information package supplied with the ATS and read and understand the information on all accessories provided.

1. Unlock the enclosure.
2. Open the enclosure.
3. Verify the correct system voltage.

   NOTE: The equipment rating nameplate on the transfer switch lists the voltage. See *Figure 3*.

4. Close Source 1 circuit. breaker.

   NOTE: The controller will illuminate Source 1 Available LED if proper voltage is sensed.

5. Verify the phase to phase voltages at Source 1 line terminals.
6. Close Source 2 circuit breaker.
7. Start the generator's engine.

   NOTE: The controller will illuminate Source 2 Available LED when preset voltage and frequency levels are reached.

8. Verify the phase to phase voltages at Source 1 line terminals.
9. Verify that the phase rotation of Source 1 is the same as the phase rotation of Source 2.



10. Shut down the generator's engine.
11. Place the starting control in the Automatic position.
12. Complete the visual inspection of the transfer switch.
13. Close the enclosure.
14. Lock the enclosure.

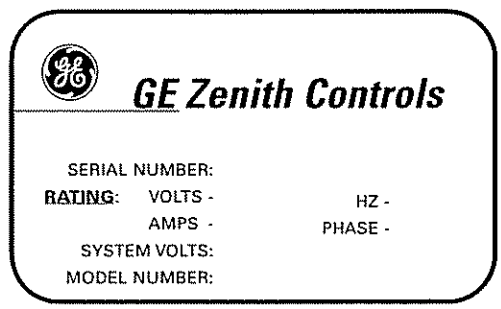

Figure 3

⚠ CAUTIONS ⚠

Certain accessories, per specific schematics, can inhibit automatic transfer.

Engine Gen-Set could start when engine control wires are attached.

Katolight Service - Master Repair Manual - Page 4376

Initial Energization *(cont'd)*

After all options and accessories are checked and verified, follow these steps to set up the ATS. Refer to Entelli-Switch 250 display *Figure 4*. The annunciation LEDs illuminate to indicate (1) source availability, (2) ATS position, and (3) Entelli-Switch 250 control function (timing).

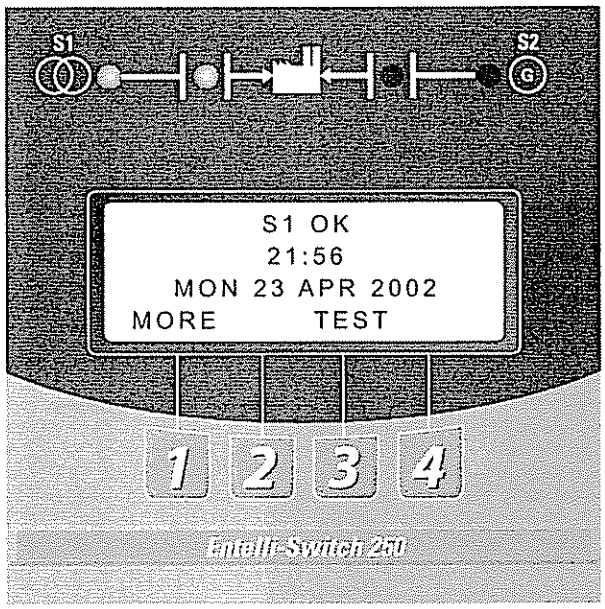

Figure 4 – LCD and keypad

1. Unlock the enclosure.
2. Open the enclosure.
3. Place the Disconnect Switch in the Inhibit.

   NOTE: This step is only performed if the "DS" Option was purchased.

4. Close the external (up-stream) Source 1 circuit breaker.

   NOTES: Source 1 Available and Source 1 Position LED's will illuminate.

   If Source 1 Available LED does not illuminate, verify that Source 1 Voltage is above the preset restore value.

   The Gen-Set will start and run while Source 2 stop Delay Timer is timing.

5. Close the External (up-stream) Source 2 line circuit breaker.
6. Start the engine generator in MANUAL mode.

   NOTE: When the voltage and frequency reach preset values, the Source 2 Available LED will illuminate.

7. Verify the phase to phase voltages at Source 2 line terminals.
8. Verify that the phase rotation of Source 2 is the same as the phase rotation of Source 1.



9. Shut down the generator's engine. (Place in Automatic Mode.)

   NOTE: Source 2 Available LED will turn off.

   NOTE: The engine generator will continue to run for the duration of Source 2 Stop Delay Timer.

10. Place the disconnect switch to ENABLE.
11. Complete the visual inspection of the transfer switch.
12. Close the enclosure.
13. Lock the enclosure.

⚠ WARNING ⚠

When performing a hi-pot or dielectric test on the power section, DISCONNECT the control panel plugs from the microprocessor to avoid potential damage.

Katolight Service - Master Repair Manual - Page 4377

⚠ DANGER ⚠

HAZARDOUS VOLTAGE
(Can Cause Severe Injury or Death)

Turn OFF all power before installation, adjustment, or removal of transfer switch or any of its components.

Control Connections

Figure 5

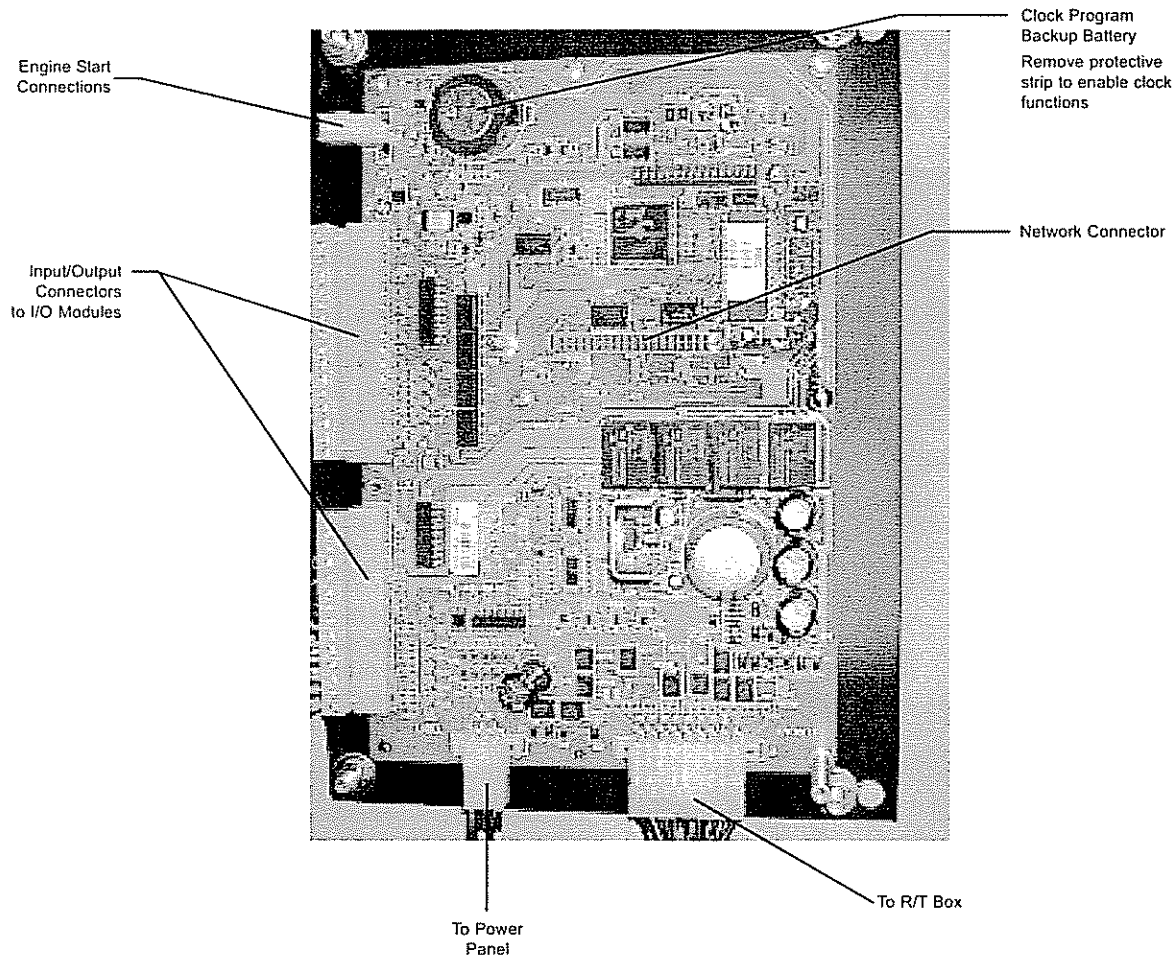

A complete information package is furnished with each transfer switch including a complete connection diagram and schematic which details all necessary control circuit field connections.

The engine start control wires connect to the engine start relay terminals located to the left of the microprocessor. Figure 5 shows the location of these terminals.

The terminals are clearly identified by a label on the microcontroller backplate. In the case of manual transfer switches, or in other applications not requiring the microprocessor, clearly marked terminal blocks are provided in the upper left corner of the control panel for the engine start control wires.

Katolight Service - Master Repair Manual - Page 4378

Entelli-Switch 250 Controller

Consists of two major assemblies:

I. The **Microprocessor** contains the following:

A. Entelli-Switch 250 Board - Customer Input and Output (I/O) for system interface. Located on the left hand side of the back of the unit (see figure 6)

1. I/O accessories that can be found here are:
   a. Engine start relay P output
   b. Pre-Signal to transfer T3, W3 and UMD output (optional)
   c. Transfer Inhibit Q3 and Q7 input (optional)
   d. Remote test Q2 input (optional)
   e. Network interface ZNET input/output (optional)

B. LCD and Keypad located on the exterior of the door (see figure 7)

1. User accessibility to the following:
   a. LED indication of source availability
   b. LED indication of transfer switch position
   c. LCD screen indicates:
      (1) timer count down (numeric)
      (2) event reporting (text)
   d. Keypad provides user interface to: *[in conjunction with LCD screen]*
      (1) Setting sensors and timers
      (2) Configuring logic accessories

II. The **R/T box** (relay transformer box) contains the following: (see figure 6)

A. Relays which are required for controller output to energize the transferring mechanism of the transfer switch at line voltage.

B. Transformers which drop line voltage to control level for controller input.

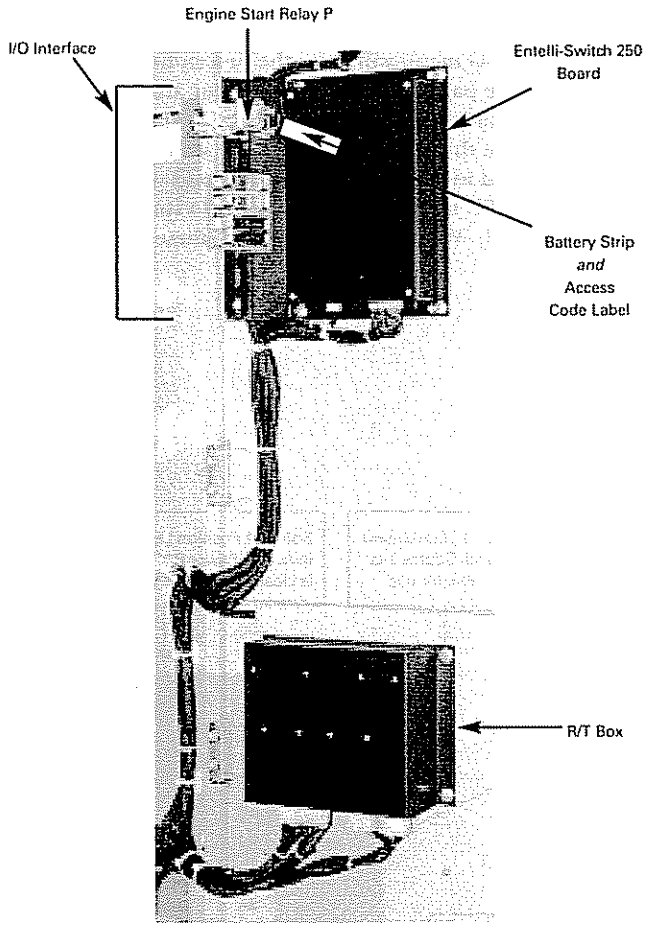

Figure 6

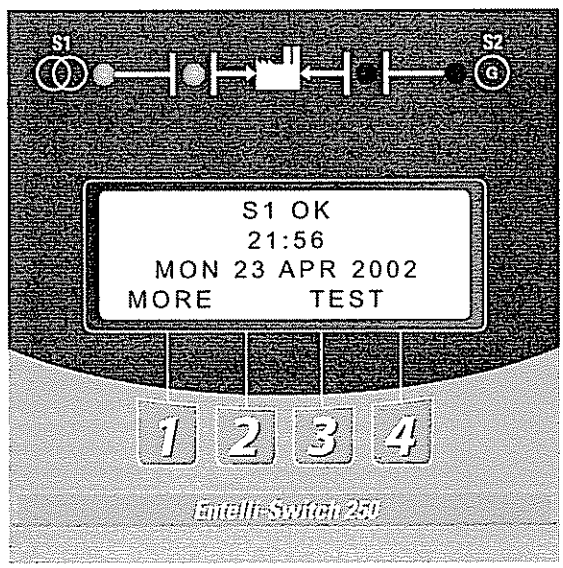

Figure 7

Katolight Service - Master Repair Manual - Page 4379

LCD & Keypad

These options are accessible through the LCD and keypad (see figure below). To become familiar with the options loaded into a particular unit, scrolling through the SET and CFG menu will show the descriptions of the options (see pages 17-18). These menus are the very same menus that are used to access the setting and/or configuration of these options. The SET (setting) menu is primarily used to show or change, time and voltage settings. The CFG menu is primarily used to turn an option on or off. When scrolling through these menus, no changes can be made without entry of the access code. The factory set six-digit access code is located on a white label on the back of the unit (see figure 10 pgs. 17-19).

The Entelli-Switch 250 has many logic options. Each controller is downloaded with options at the time of manufacture. The collection of options that any one controller has is specified at the time of order placement. The following pages include all the options that can reside in the controller. Not all units include all options.

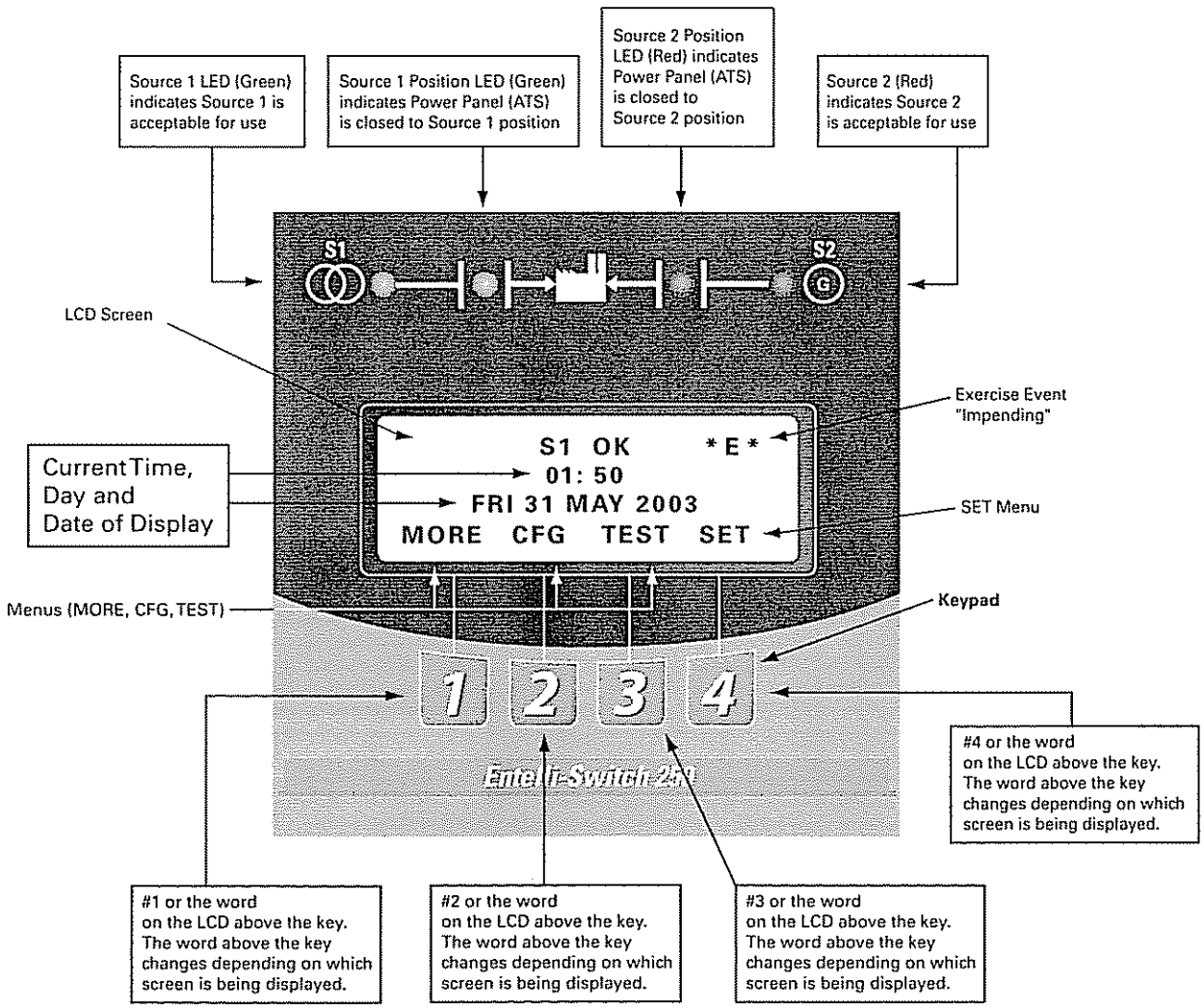

Figure 8

Katolight Service - Master Repair Manual - Page 4380

Standard 3-Phase Sensing on 3 and 4 Pole Units

Source 1

Under Voltage "Restore"
Factory Default: 90%
This adjustment determines the minimum acceptable voltage required to transfer to Source 1.
Adjust via the SET menu. Range is 85% to 100% in 1% increments (see page 18).
Once satisfied, the T timer will begin timing to transfer to Source 1.

Under Voltage "Fail"
Factory Default: 80%
This adjustment determines the low voltage threshold.
Adjust via the SET menu. Range is 75% to 98% in 1% increments (see page 18).
"Fail" must be a minimum of 2 % below "Restore" setting. Once voltage falls below threshold, P timer begins timing to signal Source 2 Generator to start.

Under Frequency "Restore"
Factory Default: 95%
This adjustment determines the minimum acceptable frequency required to transfer to Source 1.
Adjust via the SET menu. Range is 90% to 100% in 1% increments (see page 18).
Once satisfied, the T timer will begin timing to transfer to Source 1.

Under Frequency "Fail"
Factory Default: 90%
This adjustment determines the low frequency threshold.
Adjust via the SET menu. Range is 88% to 98% in 1% increments (see page 18).
"Fail" must be a minimum of 2 % below "Restore" setting. Once satisfied, the T timer will begin timing to transfer to Source 1.

Over Frequency "Restore"
Factory Default: 102%
This adjustment determines the minimum acceptable Over Frequency threshold at which the transfer switch is allowed to re-transfer to Source 1.
Adjust via the SET menu. Range is 102% to 104% in 1% increments (see page 18). "Restore" must be a minimum of 1% below "Fail" setting.

Over Frequency "Fail"
Factory Default: 105%
This adjustment determines the maximum acceptable Over Frequency.
Adjust via the SET menu. Range is 103% to 105% in 1% increments (see page 18).Once exceeded, the P timer begins timing to signal the generator to start.

Source 2

Under Voltage "Restore"
Factory Default: 90%
This adjustment determines the minimum acceptable voltage required to transfer to Source 2.
Adjust via the SET menu. Range is 85% to 100% in 1% increments (see page 18).
Once satisfied, the W timer will begin timing to transfer to Source 2.

Under Voltage "Fail"
Factory Default: 80%
This adjustment determines the low voltage threshold.
Adjust via the SET menu. Range is 75% to 98% in 1% increments (see page 18).
"Fail" must be a minimum of 2 % below "Restore" setting. Once voltage falls below threshold, T timer will be bypassed to expedite the transfer to Source 1.

Over Voltage "Fail"
Factory Default: 110%
This adjustment determines the maximum acceptable Over Voltage. Adjust via the SET menu. Range is 105% to 110% in 1% increments (see page 18). Once exceeded, the T timer will be bypassed to expedite the transfer to Source 1.

Over Voltage "Restore"
Factory Default: 105%
This adjustment determines the minimum acceptable Over Voltage threshold at which the transfer switch is allowed to transfer to Source 2. Adjust via the SET menu. Range is 103% to 105% in 1% increments (see page 18). "Restore" must be a minimum of 2% below "Fail" setting.

Under Frequency "Restore"
Factory Default: 95%
This adjustment determines the minimum acceptable frequency required to transfer to Source 2.
Adjust via the SET menu. Range is 90% to 100% in 1% increments (see page 18).
Once satisfied, the W timer will begin timing to transfer to Source 2.

Under Frequency "Fail"
Factory Default: 90%
This adjustment determines the low frequency threshold.
Adjust via the SET menu. Range is 88% to 98% in 1% increments (see page 18).
"Fail" must be a minimum of 2 % below "Restore" setting. Once satisfied, the W timer will begin timing to transfer to Source 2.

Over Frequency "Fail"
Factory Default: 105%
This adjustment determines the maximum acceptable Over Frequency. Adjust via the SET menu. Range is 103% to 105% in 1% increments (see page 18). Once exceeded, the T timer will be bypassed to expedite the transfer to Source 1.

Over Frequency "Restore"
Factory Default: 102%
This adjustment determines the minimum acceptable Over Frequency threshold at which the transfer switch is allowed to re-transfer to Source 2. Adjust via the SET menu. Range is 102% to 104% in 1% increments (see page 18). "Restore" must be a minimum of 1% below "Fail" setting.

Katolight Service - Master Repair Manual - Page 4381

Accessory Group Packages

Table 2

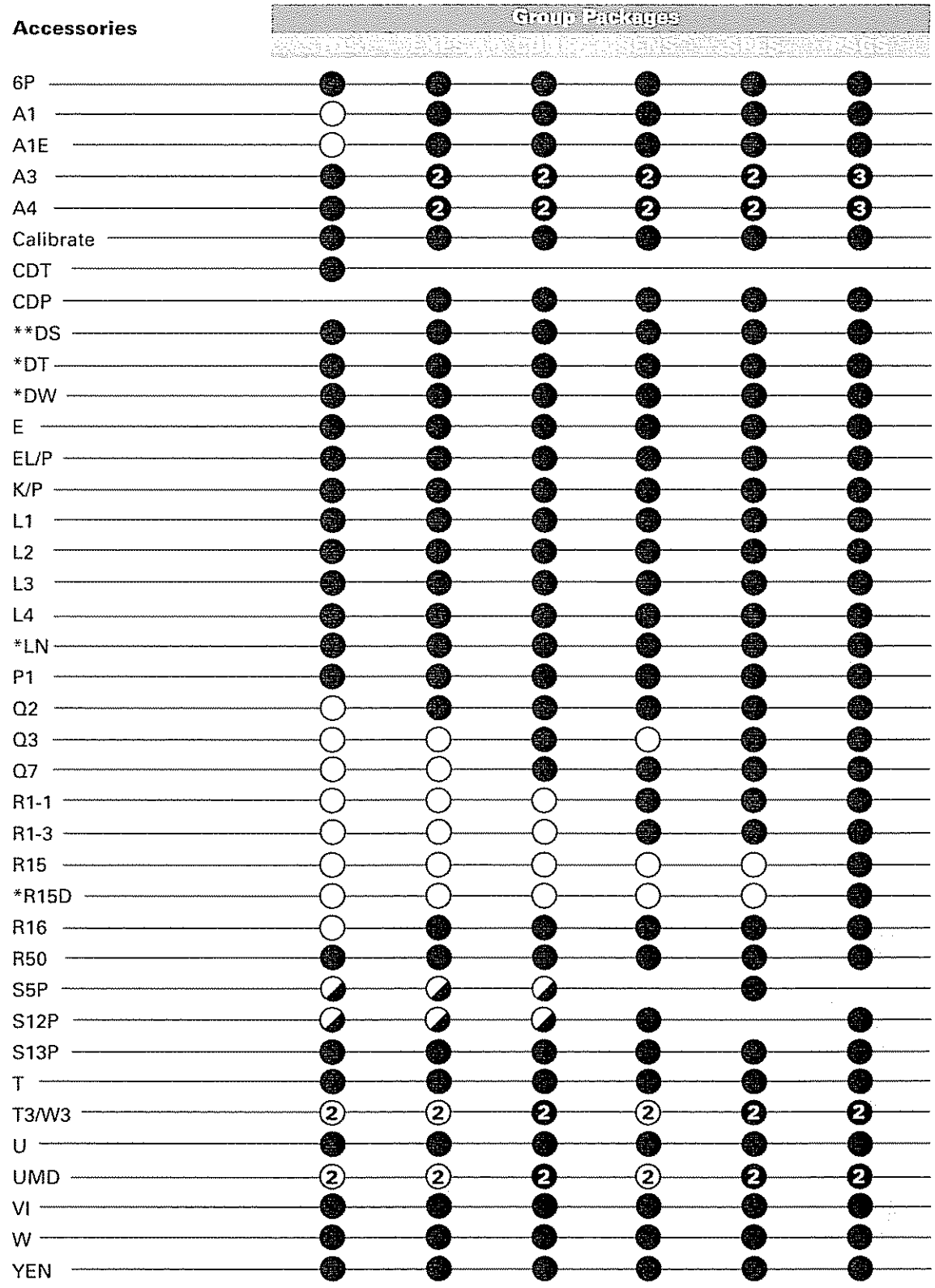

● Standard Accessory included in the group package.
○ Optional Accessory not included but can be added to group package.
◪ Optional Accessory. Can not be used with accessory having the same symbol.
— N/A
②③ Denotes an Accessory with 2 circuits as a standard.
③ Denotes an Accessory with 3 circuits as a standard.

* Delayed Transition Units Only.
** Optional for 40-400 Amp

Katolight Service - Master Repair Manual - Page 4382

Accessory Definitions

6P
Test Switch, Momentary

6A
Test Switch, Maintained Auto/Momentary Test

6AP
Test Switch, Maintained/Momentary utilizing keypad

6B
Test Switch, Maintained - Auto / Momentary - Test, Key Operated

6C
Test Switch, Maintained - Auto / Maintained - Test, Key Operated

A1
Auxiliary Contact, operates on Source 1 line failure.

A1E
Auxiliary Contact, operates on Source 2 line failure.

A3
Auxiliary Contact: Closed in emergency (Source 2) Additional Available (10 max.) and need to be specified.

A4
Auxiliary Contact: Closed in normal (Source 1) Additional Available (10 max.) and need to be specified.

A62
Sequential Universal Motor Load Disconnect Circuit. Normally closed auxiliary contacts for motor loads. Open 0-60 seconds prior to transfer, after transfer, or both in either direction then re-close in timed sequence after transfer.

AB3
Auxiliary Contact: Closed in bypass emergency (Source 2) (S.P.D.T.) (Standard up to 400 Amp) Additional Available (10 max.) and need to be specified.

AB4
Auxiliary Contact: Closed in bypass normal (Source 1) (S.P.D.T.) (Standard up to 400 Amp) Additional Available (10 max.) and need to be specified.

B9
Battery charger connections.

Calibrate
While monitoring the actual Phase to Phase voltage levels and Frequency with a calibrated test equipment, the Phase to Phase voltage sensing and Frequency can be adjusted accordingly. Calibration capabilities are available for Frequency and AB, BC, CA Phase to Phase voltage for both Sources. Adjust via SET menu (see page 18)

CDP
Clock Exerciser Load/ No Load: Allows the Generator to start and run unloaded or to simulate a power failure, start Generator and run under load. Can be configured by end user for 1, 7, 14, 28, 365 day cycle. (See page 16)

CDT
Load or NO-Load. One event exerciser with adjustable Engine exercise timer. Exercise duration can be set between 5 and 60 minutes in 1 minute increments. Can be configured to run every 1, 7, 14, or 28 days. Factory Default is 20minutes. When exerciser is impending, (*E*) appears in the upper right hand corner of LCD screen. See page 15 for instructions. Configured via CFG (see page 17). Set via SET menu (see page 18).

CTAP
Alarm Panel on transfer to Source 2 with Silence button.

DS
Disconnect Switch, Auto/Inhibit.
Inhibits transfer in either direction when in inhibit.
Allows automatic operation when in Auto.
(40-400 Amps optional, 600-4000 Amps standard)

DT *(Delayed Transition Only)*
Time Delay from Neutral Switch position to Source 1 position. Adjustable 0-10 minutes in 1 second increments. Standard setting is 5 seconds Adjust via SET menu (see page 18)

DW *(Delayed Transition Only)*
Time Delay from Neutral Switch position to Source 2 position. Adjustable 0-10 minutes in 1 second increments. Standard setting is 5 seconds.Adjust via SET menu (see page 18)

E
Engine Start Contact

EL/P
Event Log: Sequentially Numbered Log of 16 events that track date, time, reason and action taken
System Data: Total Life Transfers (N2P)
Days Powered Up
Total Transfers to S2
Total S1 Failures
Time S1 available in Hrs
Time S2 available in Hrs. (N1P)

F
Fan contact, operates when generator is running.

HT
Heater and Thermostat

K
Frequency Meter, Door mount.

K/P
Frequency Indication for S1 and S2

L
LNP Center-off position LCD-Indicator
Indicating LED lights:
- **L1** Indicates Switch in Source 2 position.
- **L2** Indicates Switch in Source 1 position.
- **L3** Indicates Source 1 available.
- **L4** Indicates Source 2 available.

Katolight Service - Master Repair Manual - Page 4383

Accessory Definitions (cont'd)

M1
Single Phase Amp Meter

M2
Three Phase Amp Meter

M80
3000 Digital Power Monitor

M82
5200 Digital Power Meter

M83A
EPM 5300 Digital Power Meter with Modbus Port

M83B
EPM 5350 Digital Power Meter with Ethernet Port

M84
7430 Digital Power Meter , Wye or Delta

M85A
EPM 9450 Digital Power Meter, Ethernet

M85B
EPM 9450 Digital Power Meter with Internal 56K Mod.

M86A
EPM 9650 Digital Power Meter, Wye or Delta, RS232 or RS485

M86B
EPM 9650 Digital Power Meter, Wye or Delta, RS232 or RS485

N1
Running Time Meter, Door mount

N2
Operation Counter, Door Mount

P1
Time Delay Source 2 Start. Adjustable 0-10 seconds. Standard setting is 3 seconds.
Adjust via SET menu (see page 18)

P2
Time Delay S2 Start. Adjustable 1/6 to 300 seconds.

Q2
Remote Peak Shave or Area Protection Circuit. Energize Q2 to simulate Source 1 Line failure causing the Generator to start and transfer the load to Source 2. Should Emergency fail during this operation, Transfer Switch will retransfer back to Source 1.

Q3
Remote inhibit transfer to Source 2 circuit. Energize Q3 input to allow transfer to Source 2. To enable Q3 option, engage Q3 jumper.

Q7
Inhibit transfer to Source 1 circuit. Energize Q7 input to prevent transfer to Source 1.

R1-1/R1-3
Source 1 Over Voltage sensing for single and three phase systems.
Source 1 Over Voltage "Fail"
Factory Default: 110%
This adjustment determines the maximum acceptable over voltage. Adjust via the SET menu. Range is 105% to 110% in 1% increments (see page 18).
Once exceeded, the P timer begins timing to signal the Generator to start.

Source 1 Over Voltage "Restore"
Factory Default: 105%
This adjustment determines the minimum acceptable over Voltage threshold at which the Transfer Switch is allowed to automatically transfer to Source 1. Adjust via SET menu. Range is 103% to 108% in 1% increments. "Restore" must be a minimum of 2% below "Fail" setting (see page 18).

R15/R15D
Load Shed
Should Source 2 become overloaded, a signal can be given to switch to the dead or Mid position.

R16
Phase Rotation Sensing
Can be turned on or off via CFG menu (see page 17). Factory Default is on.
This feature prevents Line Source to Line Source transfers from occurring between dissimilar phase sequences. This condition is primarily caused by an installation error. Connections from Source 1 and Source 2 need be verified, compared, and corrected to remedy the inconsistent phase rotation between the sources.
WARNING: Turning off this feature can cause severe damage to loads.

R26
Interruptable Power Rate Provisions.
Allow transfer out of Source 1 position to Source 2 or dead Source 2. Alarm and Pre-Signal circuit included.

R50
In Phase Monitor this feature restricts **Live to Live Source Transfers** to occur unless both Sources are within 7 electrical degrees or less of each other. (live Source to live Source transfers usually occur during transfer back to Source 1 or during Testing). R50 does not change the operation of the Automatic Transfer Switch in a power failure mode. After all timer functions have elapsed, **the CHECKING FOR SOURCE SYNCHRONISM** will be displayed as well as the direction of transfer (S1-S2 for example denotes transfer from Source 1 to Source2). When synchronism is accomplished, transfer will take place.

Katolight Service - Master Repair Manual - Page 4384

Notes: - **If S2 Frequency is less than S1 Frequency, display will show a series of (-----.....) symbols.**
- **If S2 Frequency is greater than S1 Frequency, display will show a series of (+++++.....) symbols.**
- **Each (-) or (+) symbol represents 10 electrical degrees out of phase. A maximum of 18 symbols (180 electrical degrees) can be monitored.**
- **The number of (-) or (+) symbols decrease as the two sources approach synchronism and increase as the two sources drift out of synchronism.**
- **If S1 and S2 Frequencies are identical, the display will show a series of alternating symbols (+-+-+...) which also indicate the approximate out of phase degrees**

In the event that the Sources do not come within 7 electrical degrees of each other within 60 seconds, the unit will display the message: **SYNCH CHECKING** and will allow the user to **BYPASS**. If the **BYPASS** button is pressed, the unit will display the message: **WARNING MAY CAUSE DAMAGE TO THE LOAD**. Pressing **XFR** will actually bypass the R50. Since R50 is a passive device, the length of time it takes to reach Synchronism is dependent on the frequency difference between the two Sources. Source 1 is usually a Utility and the frequency is not within the control of the consumer. Source 2 needs to be adjusted to create an adequate difference in order for the transfer to happen a timely fashion.

Note: **For optimum performance, Source 2 Generator should be adjusted a Maximum of 2 Hertz above or below the Utility frequency, minimum of 0.1 Hertz. (58 to 59.9) or (60.1 to 62) Hertz. Adjustment of Generator to 60Hertz could cause lengthy transfer delay.**

R50 Feature can be turned ON or OFF via CFG Menu (see page 17). Factory Default if OFF.

S5P

Auto / Semi Manual selector
In "Auto" position, retransfer to Source 1 is automatic after the T timer has timed out. The T time delay is bypassed if Source 2 fails.
In "Manual", retransfer to Source 1 is upon depression of BYPASS DELAY button YEN or if Source 2 fails.

S12P

Auto / Manual Selector
In "Auto" position, the Automatic Transfer Switch functions automatically as specified with the Switch drawings.
In "Manual" the Automatic Transfer Switch will transfer to either direction upon depression of Source 1 or Source 2 transfer buttons.
Should Source 1 fail, the Generator (Source 2), will automatically start. Once transferred in Manual, the Switch maintains position selected even if selected power fails.

S13P

Transfer Commit. Configured via CFG menu. (see page 17) When this Feature is set to OFF: The transfer Switch is not committed to transfer unless the outage duration is longer than the timers that precede the transfer to Source 2 position. This assumes that the outage will be an isolated event. When this Feature is set to ON: The transfer Switch is committed to transfer to Source 2 position once the W timer has begun timing, even if Source 1 power returns before the transfer to Source 2. This is to ensure that the transfer takes place, because one outage may be followed by another.

S14

Test / Auto / Source 1 Selector, Door mount

SW1

Auto/Off/Start Engine control selector, Door mount (Keyed or non-keyed operation available)

SW2

Auto / Off Engine control selector, Door mount (Keyed or non-keyed operation available)

SW3

Source Priority Selector Switch, Door mount
Allows selection of Source 1 or Source 2 to be the Prime Source. Transfer Switch will transfer to selected Prime Source if that Source is available. (Keyed or non-keyed operation available)

T

Time Delay (S1) Source 1 Stable Timer. To delay transfer to Source 1 (immediate retransfer on Source 2 failure). Adjustable 0-60 minutes in 1 second increments. Standard setting is 30 minutes. Adjust via SET menu (see page 18)

T3/W3

Elevator Pre-Signal Auxiliary Contacts: Open 0-60 seconds prior to transfer to either direction, re-closes after transfer.

U

(S2) Source 2 Stop Delay Timer. Allows Engine to run unloaded after switch retransfer to Source 1. Adjustable 0-60 minutes in 1 second increments. Standard setting is 5 minutes. Adjust via SET menu (see page 18)

UMD

Universal Motor Load Disconnect Circuit: Auxiliary Contact opens 0-60 seconds prior to transfer in either direction, re-closes after transfer. Can be configured by end user for Pre-transfer, Post-transfer, or both.

Katolight Service - Master Repair Manual - Page 4385

Accessory Definitions (cont'd)

VI

Voltage Imbalance (Three Phase)
For a three phase source, this feature monitors phase voltage ratios based on a selected range within a selected time window. Should any phase fall below the selected lower window limit or exceed the selected higher window limit within the selected time frame, the controller initiates transfer to the other source.

Range: 5% to 20% of Nominal voltage,
10 to 30 seconds window, user adjustable.
Resolution: 1% Increments
Minimum Differential: 2% between "Fail" and "Restore" settings.
Factory default: 10% "Fail", 8% "Restore", 30 Seconds.
See CFG Menu page 17 to configure ON or OFF.
See SET Menu page 18 to set Percentage and time windows

W

Time Delay (S2) Source 2 Stable Timer. To delay transfer to Source 2. Adjustable 0-5 minutes in 1 second increments. Standard setting is 1 second. Adjust via SET menu (see page 18)

YEN

Bypass Timers Key utilizing Keypad. When applicable, the system prompts the user to press a button to bypass (T) or (W) Timers should the user so desires.

ZNET

Network Communications Interface Card

How to Set the System Clock

How to Set the System Clock

Set System Clock, time and date

- If the clock is not set, the display will show SET SYSTEM CLOCK on the second line of the S1 OK screen.
- The S1 OK screen will show time (hours and minutes) on the second line if the system clock has been set. (Date on third line)

Setting the System Clock

(Start from **S1 OK** screen)

1. Remove battery protective white plastic strip near **P** relay. *
2. Press **MORE** then press **SET**.
3. Press **MORE** and scroll to **SET SYSTEM CLOCK** using the **MORE** key.
4. Press **SEL**.
5. **ENTER ACCESS CODE** located on the white label on the back of the controller.
6. Press **SEL**.
7. Use the up and down keys to change the hour value.
8. Press **SAVE** (this will enter this value and move cursor to minutes).
9. Use the up and down keys to change the minutes.
10. Press **SAVE** (this will enter this value and move cursor to month).
11. Use the up and down key up to change the month.
12. Press **SAVE** (This will enter this value and complete the clock setting).
13. Use the up and down keys to change the date.
14. Press **SAVE** (this will enter this value and move cursor to year).
15. Use the up and down keys to change year.
16. Press **SAVE** (this will enter this value and compete the clock setting).
17. To edit settings, press **SEL** and repeat steps 6-16.
18. If the setting is satisfactory, press **MORE** (unit then returns to the **SET** menu then press **BACK**, then **ESC**.)

* Replacement battery part #K-4100
Battery will last 5 years and provides power to retain clock function only (Controller functions without battery).

Katolight Service - Master Repair Manual - Page 4386

CDT One Event Timer Exerciser

Load or No-Load
One event Exerciser with adjustable Timer. Exercise duration can be set between 5 and 60 minutes in 1 minute increments. Can be configured to run every 1,7,14, or 28 days. Factory default is 20 minutes.

How to CONFIGURE (CFG) and Set (SET) the Timer Exerciser

1. Beginning from the **S1 OK** screen, press **MORE** then **CFG**.
2. Press **MORE** to scroll to **CONFIG TIMER EXERCISER** screen.
3. The third line of the **CONFG TIMER EXERCISER** will show either **DAILY, WEEKLY, 14 DAY, 28 DAY,** or **OFF**.
4. If the third line of the **CONFG TIMER EXERCISER** shows **DAILY, WEEKLY, 14 DAY,** or **28 DAY** as desired, then proceed to step 10.
5. If the third line of the **CONFG TIMER EXERCISER** shows **OFF** or if another timer selection is desired, continue.
6. Press **SEL**.
7. Enter **ACCESS** code located on white label on the back of the controller.
8. Press **UP** or **DOWN** to select **DAILY, WEEKLY, 14 DAY,** or **28 DAY** as desired.
9. Press **SAVE**.
10. Press **MORE** to scroll to **CONFG TIMER EXERCISER (XFR)** or **(NO XFR)**.
11. Press Up or Down to select **XFR** (Load Transfer) or **NO XFR** (No Load Transfer).
12. Press **SAVE**.
13. Press **MORE** repeatedly to **BACK** then **S1 OK** screen.

Set (SET) the Exerciser:

14. Beginning from the **S1 OK** screen, press **MORE** then **SET**.
15. Press **MORE** repeatedly until **EXER S2 RUN TIME** screen.
16. Press **SEL**
17. Enter **ACCESS** code located on white label on the back of the controller.
18. Press **SEL**
19. Cursor is indicated as a line under character to be changed. Change values with up and down keys.
20. Press **SAVE** when complete.
21. Press **MORE** repeatedly until **SET USER SETUP** then press **BACK** then **ESC** to the **S1 OK** screen.

How to Initiate CDT Exerciser and to start an exercise cycle every 1, 7, 14, or 28 days
From S1 screen
1) Press **TEST**
2) Press **MORE**
3) Press **START TEST TIMER** (to initiate Test).

- If the CDT Exerciser is Factory configured for a Load Exerciser, the Controller will immediately start a load exercise. The controller will start the generator, transfer the load to Source 2 and remain in Source 2 for the duration set for **EXER S2 RUN TIME** in the **SET** menu. The controller will retransfer the load back to Source 1 after the S1 stable timer has timed out and run the generator unloaded for the duration of the S2 stop delay timer (Engine Cool Down Timer).
- If the CDT Exerciser is Factory configured for a No-Load Exerciser, the Controller will immediately start a No-load exercise. The controller will start the generator and run it unloaded for the duration of the S2 stop delay timer (Engine Cool Down Timer).

Exercise will be repeated at the same time as initiated on every 1, 7, 14, or 28 days according to the selection made in the Configure **CFG** menu.

How to Bypass (Cancel) an exercise during an exercise cycle
1) Press **BPASS**
2) Allow the controller to complete the Engine cool down cycle
If the CDT Exerciser is Factory configured for a No-Load Exerciser Or allow the controller to complete retransfer to Source 1 If the CDT Exerciser is Factory configured for a Load Exerciser

How to Bypass the next exercise event and Keep the rest of scheduled events unchanged
1) Press Test
2) Press **MORE**
3) Press **BYPASS EXER**
To re-institute the next exercise event back, press **CANCL BPASS**

How to initiate a new exercise start time
1) Press **TEST**
2) Press **MORE**
3) Press **EXER CANCL**
4) Press **START TIMER TEST**

How to check the next exercise event
1) From **S1 OK** screen, press **MORE** three times.
2) The unit will display the **PLANT EXERCISER NEXT** event in **DAYS, HOURS,** and **MINUTES**
3) Press **ESC** to **S1 OK** Screen.

Notes:
- *E* appears in the upper right hand corner of LCD screen when exercise is impending.
- For Load Exerciser, actual exercise period (ATS in S2 position)= CDT (Exerciser) timing period +T (S1 stable Timer) timing period.

Katolight Service - Master Repair Manual - Page 4387

Load / No-Load Clock Exerciser

Allows the Generator to start and run unloaded or to simulate a power failure, start Generator and run under load. Can be configured by the end user for 1, 7, 14, 28, or 365 day cycles.

- A total of 7 independent No Load exercise periods (up to 10 hours each) can be programmed for each of the daily, weekly, 14-day, and 28-day exercisers.
- A total of 12 independent No Load exercise periods (up to 10 hours) can be programmed for the 365-day Exerciser.

How to Configure (CFG) the Exerciser

1. Beginning from the **S1 OK** screen, press **MORE** then **CFG**.
2. Press **MORE** to scroll to **CONFIG CLOCK EXERCISER** screen.
3. The third line of the **CONFG CLOCK EXERCISER** will show either **DAILY, WEEKLY, 14 DAY, 28 DAY, 365 DAY** or **OFF**.
4. If the third line of the **CONFG CLOCK EXERCISER** shows **DAILY, WEEKLY, 14 DAY, 28 DAY,** or **365 DAY** as desired, press **MORE** repeatedly to **BACK**. Press **ESC** then proceed to the **SET** menu to set the **EXERCISER**.
5. If the third line of the **CONFG CLOCK EXERCISER** shows **OFF**, continue.
6. Press **SEL**.
7. Enter **ACCESS** code located on white label on the back of the controller.
8. Press **UP** or **DOWN** to select **DAILY, WEEKLY, 14 DAY, 28 DAY,** or **365 DAY** as desired.
9. Press **SAVE**.
10. Press **MORE** repeatedly to **BACK** then **ESC** to **S1 OK** screen.

How to set (SET) the DAILY Exerciser

1. Beginning from the **S1 OK** screen, press **MORE** then **SET**.
2. Press **MORE** repeatedly until **SET EXERCISER** screen.
3. Press **SEL**.
4. Enter **ACCESS** code located on white label on the back of the controller.
5. Press **SEL**
6. Cursor is indicated as a line under character to be changed. Change values with up and down keys. Press **SAVE** after each entry to save value and to move to the next value to be changed.
7. Press **BACK** when complete.
8. Press **MORE** repeatedly until **SET USER SETUP**. Press **BACK** then **ESC** to the **S1 OK** screen.

How to Bypass (Cancel) an exercise during an exercise cycle

1) Press **BPASS**
2) Allow the controller to complete the Engine cool down cycle.

If the CD Exerciser is configured or Set for a No-Load Exercise. Or allow the controller to complete retransfer to Source 1. If the CD Exerciser is configured for a Load Exerciser

How to Bypass the next exercise event and Keep the rest of scheduled events unchanged

1) Press **TEST**
2) Press **MORE**
3) Press **BYPASS EXER**

To re-institute the next exercise event back, press **CANCL BPASS**

How to check the next exercise event

1) From **S1 OK** screen, press **MORE** three times.
2) The unit will display the **PLANT EXERCISER NEXT** event in **DAYS, HOURS,** and **MINUTES**
3) Press **ESC** to **S1 OK** Screen.

Notes:

- In the **S1 OK** screen, an (***E***) appears in the upper right hand corner of LCD screen when exercise is impending.
- For Load Exerciser, actual exercise period (ATS in S2 position)= **CDT** (Exerciser) timing period +T (S1 Stable Timer) timing period.
- A value greater than zero must be entered in the Exerciser duration field to be accepted as a valid exercise period.
- The Exercise cycle will be repeated on a regular basis as programmed and initiated in the **SET** menu depending on what Exerciser was configured (selected) in the **CFG** menu.

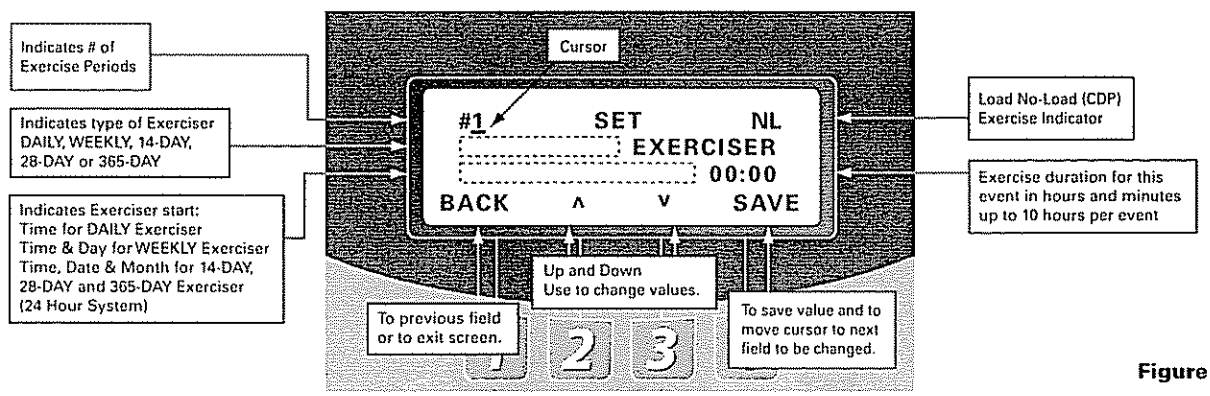

Figure 9

Katolight Service - Master Repair Manual - Page 4388

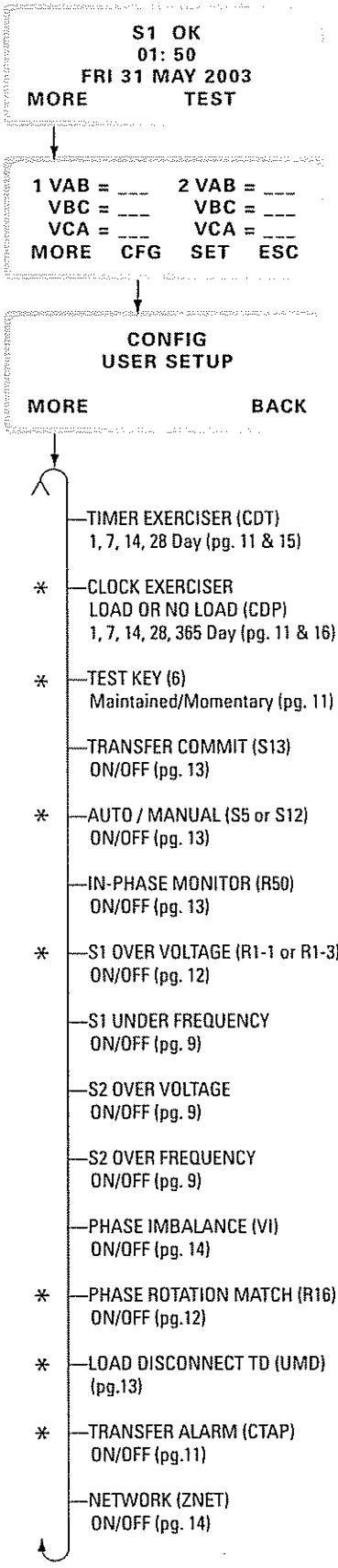

Turn options ON or OFF via keypad through the CFG menu

Enter six digit access code
(The factory assigned six-digit access code is located on the back of the controller)

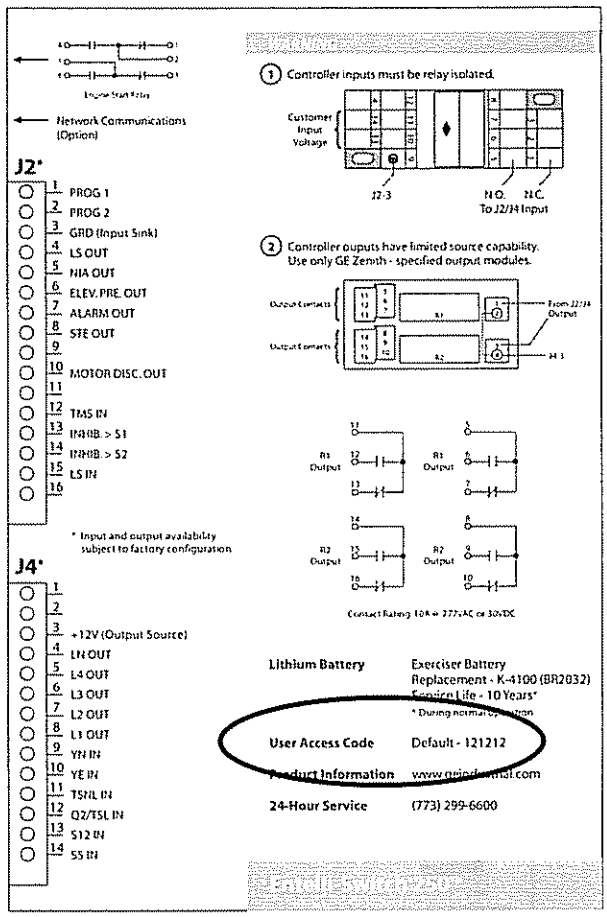

Figure 10

Katolight Service - Master Repair Manual - Page 4389

S1 OK
01: 50
FRI 31 MAY 2003
MORE TEST

1 VAB = ___ 2 VAB = ___
VBC = ___ VBC = ___
VCA = ___ VCA = ___
MORE CFG SET ESC

SET
USER SETUP

MORE BACK

- SET SYSTEM CLOCK (pg.14)
- DAYLIGHT SAVINGS ON/OFF
- * CLOCK EXERCISER (CDP) (pg.11 & 16)
- EXER S2 RUNTIME (CDT) (pg.11 & 15)
- S1 UNDER VOLTAGE (pg.9) Fail Restore
- S1 UNDER FREQUENCY (pg.9) Fail Restore
- * S1 OVER VOLTAGE (pg.12) Fail Restore
- S1 OVER FREQUENCY (pg.9) Fail Restore
- S2 UNDER VOLTAGE (pg.9) Fail Restore
- S2 UNDER FREQUENCY (pg.9) Fail Restore
- S2 OVER VOLTAGE (pg.9) Fail Restore
- S2 OVER FREQUENCY (pg.9) Fail Restore
- SET % PHASE IMBALANCE (VI) FAIL 5%, RESTORE 3% (pg.14)
- SET PHASE IMBALANCE (VI) TIME DELAY 30 seconds (pg.14)
- TIME DELAY S2 START (P1) (pg.12)
- TIME DELAY S2 STABLE (W) (pg.14)
- * LOAD PRESIGNAL TD (T3/W3) (pg.13)
- * LOAD DISCONNECT TD (UMD) (pg.13)
- * ATS OPEN TIME TO S2 (DW) DELAY units only (pg.11)
- TIME DELAY S1 STABLE (T) (pg.13)
- * ATS OPEN TIME TO S1 (DT) DELAY units only (pg.11)
- S2 STOP DELAY (U) (pg.13)
- CALIBRATE S1 (pg.11)
- CALIBRATE S2 (pg.11)

* Optional Accessories

Change adjustable values through the SET menu.

Enter six digit access code
(The factory assigned six-digit access code is located on the back of the controller)

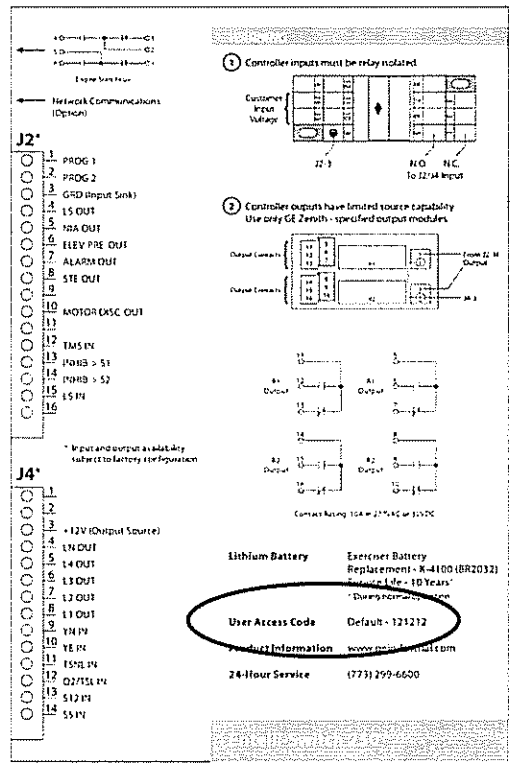

Figure 10

Katolight Service - Master Repair Manual - Page 4390

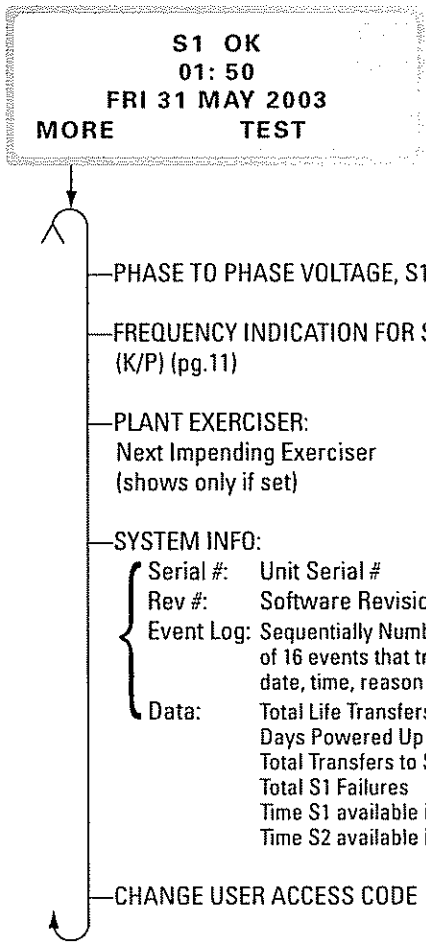

View System Data

Enter six digit access code
(The factory assigned six-digit access code
is located on the back of the controller)

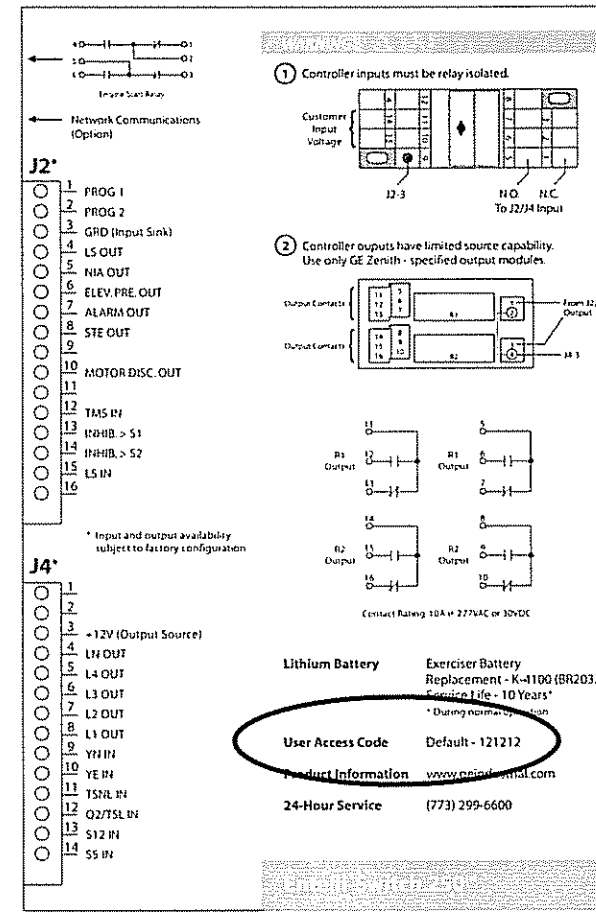

Figure 10

Katolight Service - Master Repair Manual - Page 4391

Testing

⚠ CAUTION ⚠

Due to hazardous voltage and current, GE Zenith recommends that a GE Zenith Certified technician or a qualified electrician must perform the installation and maintenance of the switch.

⚠ WARNING ⚠

Both power sources must be disconnected before manual operation of the switch.

Introduction

A manual operator handle is provided with the transfer switch for maintenance purposes only. Manual operation of the switch must be checked before it is operated electrically. **Both power sources must be disconnected before manual operation of the switch.** Insert the handle and operate the transfer switch between the Source 1 and Source 2 positions. The transfer switch should operate smoothly without binding. Return the switch to the Source 1 position, remove the handle, and return it to the holder provided.

After completing the inspection, cleaning and servicing of the transfer switch, reinstall the switch cover, and close and lock the cabinet door. Reclose the circuit breakers feeding the utility and generator sources to the switch.

Initiate the electrical transfer test by activating the test switch. P timer will time out and the microcontroller will send an engine start signal. When the W time has elapsed, the switch will complete its transfer by closing into the Source 2.

Deactivating the test switch will start retransfer to Source 1. The switch will complete its retransfer to Source 1 after the time delay of the T timer. The U engine overrun timer allows the engine generator to run unloaded for a preset cool down period.

Test Options

The ATS can be tested in either of two positions:

1) "Auto Position"
   Full Transfer Test - This test checks the complete operation of the ATS by transferring the load's power source from Source 1 to Source 2.
2) "Test Position"
   This procedure is recommended for Preventive Maintenance (PM) of ATS without interrupting the Load thru the BYPASS/ISOLATION SWITCH.

NOTE: A periodic test of the transfer switch under load conditions is recommended to insure proper operation. (See National Electric Code articles 700 and 701).

⚠ WARNING ⚠

When performing a hi-pot or dielectric test on the power section, DISCONNECT the control panel plugs from the microprocessor to avoid potential damage.

Katolight Service - Master Repair Manual - Page 4392

⚠ NOTICE ⚠

A periodic test of the transfer switch under load conditions is recommended to insure proper operation. (See National Electric Code articles 700 and 701)

ATS Testing

Start generator and verify proper voltage, frequency and phase sequence (match to Source 1). Shut down gen set and place in Auto. Complete the visual inspection of the transfer switch, and close the cabinet door.

Initiate the test by pressing the TEST button on the LCD keypad. The controller will then prompt for your access code. After entering the code, three test options will appear— XFR LOAD, FAST TEST and NO XFR (See Figure 11).

- **XFR LOAD** test starts the generator and using the current timer settings, transfers the load to Source 2.
- **FAST TEST** test presets timer values to a maximum 30 seconds during the test. After completion of the test, all timers are reset to their original values. (T3, W3, DT and DW remain)
- **NO XFR** test starts the generator but does not transfer the load to the Source 2.

Press and hold the desired test option button until the switch transfers to Source 2 (load test) or until the generator has been run for the desired amount of time (no load test). Releasing the test button before W timer timeout will abort the test (Exception: when the transfer commit option, is configured "ON").

To test lamps, press TEST then scroll through MORE, then press LAMP TEST. To cancel LAMP TEST press MORE.

Standard Transition

When the test is initiated, the controller initiates the Time Delay Source 2 Start Timer (Engine Start Timer "P") cycle. A manual CANCEL button is provided to cancel the test if desired. Upon completion of the (P) time delay, an Engine start Signal is sent to Source 2. When Source 2 voltage and frequency reach the preset "Restore" Values, the time delay to Source 2 Timer (W) begins its timing cycle to ensure voltage and frequency stabilization before transfer. A manual pushbutton BYPASS is provided to bypass the "W" time delay if desired. After the (W) time delay, the CCE relay energizes the CE solenoid to close the transfer switch in to Source 2. The SE limit switch activates to de-energize the CCE relay.

Restoration of Source 1 Power:

Deactivating the test switch initiates re-transfer to Source 1 sequence.The delay to Source 1 Timer (T) begins its timing cycle to ensure voltage and frequency stabilization before retransfer. A manual pushbutton BYPASS is provided to bypass the "T" time delay if desired. After the (T) time delay, the CCN relay energizes the CN solenoid to retransfer the switch to Source 1. The SN limit switch activates to de-energize the CCN relay.

Immediately after re-transfer, the S2 Stop Delay Timer (Delay to Engine Stop "U") begins its cycle to allow Source 2 Engine to run unloaded. A manual pushbutton BYPASS is provided to bypass the "U" time delay if desired. Upon completion of the (U) timing cycle, the controller sends an Engine stop signal.

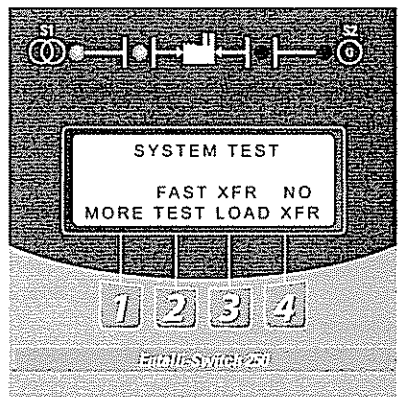

Figure 11

Delayed Transition

Source 1 Power Failure:

When the test is initiated, the controller initiates the Time Delay Source 2 Start (Engine Start Timer "P") cycle. A manual CANCEL button is provided to cancel the test if desired Upon completion of the (P) time delay, an Engine start Signal is sent to Source 2. When Source 2 voltage and frequency reach the preset "Restore" values, the time delay to open Source 1 timer (W) begins its timing cycle to ensure voltage and frequency stabilization before re-transfer. A manual pushbutton BYPASS is provided to bypass the "W" time delay if desired. After the (W) time delay, the CCNO relay energizes the CNO solenoid to open the transfer switch out of Source 1 position. The time delay to Source 2 timer (DW) begins its timing cycle. After the (DW) time delay, the CCE relay energizes. The switch then completes transfer to Source 2 by energizing the CE solenoid. The SE limit switch activates to de-energize the CCE relay.

Restoration of Source 1 Power:

Deactivating the test switch initiates re-transfer to Source Isequence.The delay to open Source 2 Timer (T) begins its timing cycle to ensure voltage and frequency stabilization before retransfer. A manual pushbutton BYPASS is provided to bypass the "T" time delay if desired. After the (T) time delay, the CCEO relay energizes the CEO solenoid to open the switch out of Source 2 position. The time delay to Source 1 timer (DT) begins its timing cycle. After the (DT) time delay, the CCN relay energizes the CN solenoid to complete re-transfer of the switch to Source 1. The SN limit switch activates to de-energize the CCN relay.

Immediately after re-transfer, the S2 Stop Delay Timer (Delay to Engine Stop "U") begins its cycle to allow Source 2 Engine to run unloaded. A manual pushbutton BYPASS is provided to bypass the "U" time delay if desired. Upon completion of the (U) timing cycle, the controller sends an Engine stop signal.

Katolight Service - Master Repair Manual - Page 4393

⚠ NOTICE ⚠

A periodic test of the transfer switch under load conditions is recommended to insure proper operation. (See National Electric Code articles 700 and 701)

Closed Transition

GE Zenith Closed Transition Transfer Switches are designed to Transfer the Load between two available sources with out interrupting power to the Load (Make-Before-Break). Paralleling of the two sources occurs within a predefined window of synchronization and lasts less than 100 milliseconds. The initial Source is then disconnected.

Initiating a Closed Transition
When a Test is initiated, the controller initiates the Time Delay Source 2 Start (Engine Start Timer "P") cycle. Upon completion of the (P) time delay, an Engine start Signal is sent to Source 2. When Source 2 voltage and frequency reach the preset "Restore" values, the time delay to open Source 1 timer (W) begins its timing cycle. After the (W) time delay, the ATS closes into Source 2 only after the controller ensures the proper phase relationship between the two Sources. After the ATS closes into Source 2, the SE limit switch becomes activated to de-energize the CCE relay and energize the CCNO relay which opens the ATS out of Source 1. The SNO limit switch activates to de-energize the CCNO relay. The ATS has now closed into Source 2 position without interrupting the load.

Re-Transfer with Closed Transition
Deactivating the Test Switch initiates the re-transfer. When Source 1 voltage and frequency reach the preset "Restore" values, the time delay to open Source 2 timer (T) begins its timing cycle. After the (T) time delay, the ATS closes into Source 1 only after the controller ensures the proper phase relationship between the two Sources. After the ATS closes into Source1, the SN limit switch becomes activated to de-energize the CCN relay and energize the CCEO relay which opens the ATS out of Source 2. The SEO limit switch activates to de-energize the CCEO relay. The ATS has now closed back into Source 1 position without interrupting the load.

The ATS defaults to an open transition transfer when Source 1 fails. Closed transition transfer is not possible with only one source available. If the optional Transition Mode Selector (TMS) is available, one can select an Open Transition Transfer or a Closed Transition Transfer when both Sources are available..

If while in Closed Transition Mode, the ATS fails to open the source it is attempting to "transfer out of" within 100 milliseconds, an Alarm will sound and the source that the ATS just closed into will be opened leaving the ATS in its initial source while disabling all other transfer operations until the problem is corrected and the "Fail to Open Lockout Reset" has been pressed.

A signal will be provided (STE) to Shunt Trip the Generator Circuit Breaker if the Transfer Switch remains closed into both Sources for more than 325 milliseconds. The load will then be fed by the Source 1. The maximum time that the two Sources would be parallel, under these conditions, is less than 500 milliseconds. Before operating the Closed Transition Transfer Switch, the condition must be corrected and the Shunt Trip reset. Refer to procedure for servicing the Switch after Shunt Tripping occures.

The unit is Factory set to accomplish transfer within 5 electrical degrees.
Requires an Isochronous Governor with an operating frequency of 60+/- 0.2 Hz.
Requires a Shunt Trip Breaker on the Generator set with a response time not exceeding 50 milliseconds.

Katolight Service - Master Repair Manual - Page 4394

⚠ DANGER ⚠

HAZARDOUS VOLTAGE
(Can Cause Severe Injury or Death)

Turn OFF all power before installation, adjustment, or removal of transfer switch or any of its components.

Emergency Service Procedure for Extended Parallel Time

ZTSCT Transfer Switch

If Source 2 breaker shunt trip was triggered after an extended parallel time (malfunction) occurred. Follow these steps to open the transfer switch.

1) Disconnect all power sources from the transfer switch by opening all line breakers (Source 1 and Source 2).
2) Open the cabinet door and turn the disconnect switch to the INHIBIT position.
3) Remove the service access cover on the left hand side of the transfer switch.
4) The manual operator and the manual handle will now be exposed. Insert the handle into the Source 2 side operator. Open the Source 2 side contacts.
5) Close the cabinet door.
6) Energize Source 1 to supply the load until further repairs can be done.

ZBTSCT Transfer/Bypass Switch

a. Auto Location:

Removal of closed transition transfer switch after Source 2 breaker shunt trip.

1) Disconnect all power sources from bypass-isolation transfer switch.
2) Open the bottom cabinet door and turn the Disconnect Switch (DS) to the INHIBIT position.
3) Remove the service access cover on the left hand side of the transfer switch.
4) The manual operator and the manual handle will now be exposed. Insert the handle into the Source 2 side manual operator. Open the Source 2 side contacts.
5) Close bottom cabinet door.
6) Energize Source 1 power.
7) Close the bypass contacts (BN).*
8) Isolate the transfer switch.*
9) Remove the transfer switch from the bypass-isolation transfer switch as indicated on the bypass instruction label to inspect and repair.
10) Re-install the transfer switch after maintenance with contacts closed to the same source as the bypass switch. Reinstall the manual handle in its holder and the service access cover on the left side of the transfer switch.
11) Re-connect the transfer switch to AUTO.*

b. Auto Location:

Removal of the closed transition transfer switch if Source 1 and Source 2 contacts remain open.

1) Close the bypass switch into the available source.*
2) Turn the DS to INHIBIT. Remove the transfer switch service access cover. Close the transfer switch into the same source as the bypass switch. (Incorrect sequencing is prevented by the interlocks while the transfer switch is in AUTO only.)
3) Remove the transfer switch from the bypass-isolation transfer switch to inspect and repair.*

c. Test Location:

Removal of the closed transition transfer switch if both Source 1 and Source 2 contacts remain open.

1) Close the bypass switch contacts (BN) as indicated on the bypass instruction label on the cabinet door.
2) Disconnect all power sources from bypass-isolation closed transition transfer switch.
3) Open bottom cabinet door. Turn the Disconnect Switch (DS) to the INHIBIT position.
4) Remove the service access cover on the left side of the transfer switch.
5) The manual operator and the manual handle will not be exposed. Insert the handle into the Source 1 side and close the Source 1 contacts.
6) Close the bottom cabinet door.
7) Energize Source 1 power.
8) Remove the automatic transfer switch from the bypass-isolation transfer switch.*
9) Re-install the transfer switch after maintenance with contacts closed to the same source as the bypass switch. Reinstall the manual handle in its holder and the service access cover on the left side of the transfer switch.
10) Re-connect the transfer switch to AUTO.*

* As described in the Sequence of Operation section located in the ZTSCT/ZBTSCT Series Manual (71R-5000)

Katolight Service - Master Repair Manual - Page 4395

Sequence of Operation

Standard Transition

Source 1 Power Failure:
When Source 1 voltage or frequency has fallen below the preset "Fail" values, the controller initiates the Time Delay Source 2 Start Timer (Engine Start Timer "P") cycle. Upon completion of the (P) time delay, an Engine start Signal is sent to Source 2. When Source 2 voltage and frequency reach the preset "Restore" Values, the time delay to Source 2 Timer (W) begins its timing cycle to ensure voltage and frequency stabilization before transfer. A manual pushbutton BYPASS is provided to bypass the "W" time delay if desired. After the (W) time delay, the CCE relay energizes the CE solenoid to close the transfer switch in to Source 2. The SE limit switch activates to de-energize the CCE relay.

Restoration of Source 1 Power:
When Source 1 power reach the preset "Restore" values, the controller initiates re-transfer to Source 1sequence.The delay to Source 1 Timer (T) begins its timing cycle to ensure voltage and frequency stabilization before retransfer. A manual pushbutton BYPASS is provided to bypass the "T" time delay if desired. After the (T) time delay, the CCN relay energizes the CN solenoid to retransfer the switch to Source 1. The SN limit switch activates to de-energize the CCN relay.

Immediately after re-transfer, the S2 Stop Delay Timer (Delay to Engine Stop "U") begins its cycle to allow Source 2 Engine to run unloaded. A manual pushbutton BYPASS is provided to bypass the "U" time delay if desired. Upon completion of the (U) timing cycle, the controller sends an Engine stop signal.

Delayed Transition

Source 1 Power Failure:
When Source 1 voltage or frequency has fallen below the preset "Fail" values, the controller initiates the Time Delay Source 2 Start (Engine Start Timer "P") cycle. Upon completion of the (P) time delay, an Engine start Signal is sent to Source 2. When Source 2 voltage and frequency reach the preset "Restore" values, the time delay to open Source 1 timer (W) begins its timing cycle to ensure voltage and frequency stabilization before re-transfer. A manual pushbutton BYPASS is provided to bypass the "W" time delay if desired. After the (W) time delay, the CCNO relay energizes the CNO solenoid to open the transfer switch out of Source 1 position. The time delay to Source 2 timer (DW) begins its timing cycle. After the (DW) time delay, the CCE relay energizes. The switch then completes transfer to Source 2 by energizing the CE solenoid. The SE limit switch activates to de-energize the CCE relay.

Restoration of Source 1 Power:
When Source 1 power reach the preset "Restore" values, the controller initiates re-transfer to Source 1 sequence.The delay to open Source 2 Timer (T) begins its timing cycle to ensure voltage and frequency stabilization before retransfer. A manual pushbutton BYPASS is provided to bypass the "T" time delay if desired. After the (T) time delay, the CCEO relay energizes the CEO solenoid to open the switch out of Source 2 position. The time delay to Source 1 timer (DT) begins its timing cycle. After the (DT) time delay, the CCN relay energizes the CN solenoid to complete re-transfer of the switch to Source 1. The SN limit switch activates to de-energize the CCN relay.

Immediately after re-transfer, the S2 Stop Delay Timer (Delay to Engine Stop "U") begins its cycle to allow Source 2 Engine to run unloaded. A manual pushbutton BYPASS is provided to bypass the "U" time delay if desired. Upon completion of the (U) timing cycle, the controller sends an Engine stop signal.

Table 3

Timer Designations as they appear in the SET menu						
ATS Type	**P**	**W**	**DW**	**T**	**DT**	**U**
Standard Transition	Time Delay S2 Start	Time Delay S2 Stable	→	Time Delay S1 Stable	→	S2 Stop Delay
Delay/ Open Transition	Time Delay S2 Start	Time Delay S2 Stable	ATS Open Time to S2	Time Delay S1 Stable	ATS Open Time to S1	S2 Stop Delay
Source 1 Fails	Transfer to Source 2 →		↓ Source 1 Returns		Transfer to Source 1 →	Engine Cooldown

Katolight Service - Master Repair Manual - Page 4396

Closed Transition

GE Zenith Closed Transition Transfer Switches are designed to Transfer the Load between two available sources with out interrupting power to the Load (Make-Before-Break). Paralleling of the two sources occurs within a predefined window of synchronization and lasts less than 100 milliseconds. The initial Source is then disconnected.

Initiating a Closed Transition
When a Test is initiated, the controller initiates the Time Delay Source 2 Start (Engine Start Timer "P") cycle. Upon completion of the (P) time delay, an Engine start Signal is sent to Source 2. When Source 2 voltage and frequency reach the preset "Restore" values, the time delay to open Source 1 timer (W) begins its timing cycle. After the (W) time delay, the ATS closes into Source 2 only after the controller ensures the proper phase relationship between the two Sources. After the ATS closes into Source 2, the SE limit switch becomes activated to de-energize the CCE relay and energize the CCNO relay which opens the ATS out of Source 1. The SNO limit switch activates to de-energize the CCNO relay. The ATS has now closed into Source 2 position without interrupting the load.

Re-Transfer with Closed Transition
Deactivating the Test Switch initiates the re-transfer. When Source 1 voltage and frequency reach the preset "Restore" values, the time delay to open Source 2 timer (T) begins its timing cycle. After the (T) time delay, the ATS closes into Source 1 only after the controller ensures the proper phase relationship between the two Sources. After the ATS closes into Source1, the SN limit switch becomes activated to de-energize the CCN relay and energize the CCEO relay which opens the ATS out of Source 2. The SEO limit switch activates to de-energize the CCEO relay. The ATS has now closed back into Source 1 position without interrupting the load.

The ATS defaults to an open transition transfer when Source 1 fails. Closed transition transfer is not possible with only one source available. If the optional Transition Mode Selector (TMS) is available, one can select an Open Transition Transfer or a Closed Transition Transfer when both Sources are available..

If while in Closed Transition Mode, the ATS fails to open the source it is attempting to "transfer out of" within 100 milliseconds, an Alarm will sound and the source that the ATS just closed into will be opened leaving the ATS in its initial source while disabling all other transfer operations until the problem is corrected and the "Fail to Open Lockout Reset" has been pressed.

A signal will be provided (STE) to Shunt Trip the Generator Circuit Breaker if the Transfer Switch remains closed into both Sources for more than 325 milliseconds. The load will then be fed by the Source 1. The maximum time that the two Sources would be parallel, under these conditions, is less than 500 milliseconds. Before operating the Closed Transition Transfer Switch, the condition must be corrected and the Shunt Trip reset. Refer to procedure for servicing the Switch after Shunt Tripping occures.

The unit is Factory set to accomplish transfer within 5 electrical degrees.
Requires an Isochronous Governor with an operating frequency of 60+/- 0.2 Hz.
Requires a Shunt Trip Breaker on the Generator set with a response time not exceeding 50 milliseconds.

Katolight Service - Master Repair Manual - Page 4397

Standard Transition

Each MX250 microprocessor based ATS controller requires a relay/transformer box to apply line voltage to the ATS operator via coil control relays. Also required is power for the MX150 printed circuit board and an application of sensing voltage proportional to line voltage. This is accomplished by the relay transformer box. This method of switching operator voltage and applying power and sensing voltage to the printed circuit board isolates the MX250 from the line voltage, further protecting the controller from harmful line transients. Two versions of the R/T box exist depending on the type of ATS (standard transition or delayed transition).

The following layout drawings of the R/T Box components (standard and delayed transition) include a bill of materials for replacement parts. Schematics are included to indicate proper wiring.

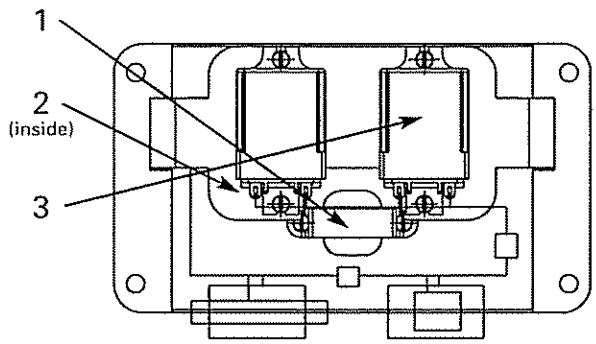

Figure 12

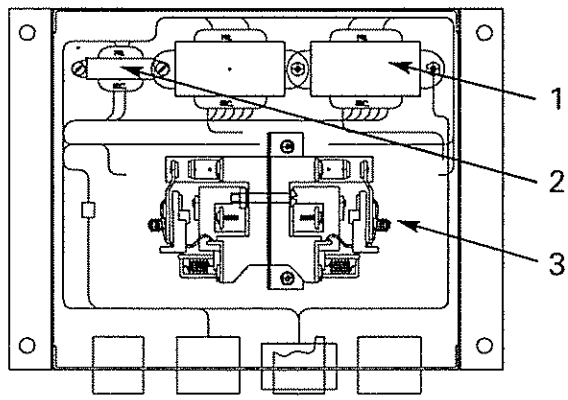

Figure 13

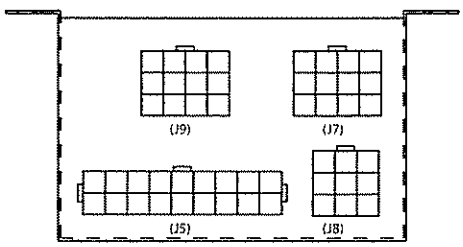

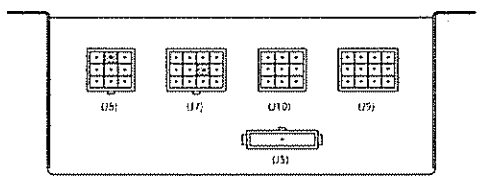

40-225 Amp Molded Power Section Transformer Usage *(see Figure 12)*

R/T Box Assembly Part No.	Primary Voltage at 50/60 Hz	1 VA XFMR Part No.	25 VA XFMR Part No.
57P-1015	120V	K-3216	K-3224
57P-1016	208-220V	K-3217	K-3225
57P-1017	230-240V	K-3218	K-3226
57P-1018	277V	K-3219	K-3227
57P-1019	380-400V	K-3220	K-3228
57P-1020	416-440V	K-3221	K-3229
57P-1021	460-480V	K-3222	K-3230
57P-1022	575-600V	K-3223	K-3231

40-3000 Amp - All Other Standard Types Transformer Usage *(see Figure 13)*

R/T Box Assembly Part No.	Primary Voltage at 50/60 Hz	1 VA XFMR Part No.	25 VA XFMR Part No.
50P-1026	120V	K-3216	K-3224
50P-1027	208-220V	K-3217	K-3225
50P-1028	230-240V	K-3218	K-3226
50P-1029	277V	K-3219	K-3227
50P-1030	380-400V	K-3220	K-3228
50P-1031	416-440V	K-3221	K-3229
50P-1032	460-480V	K-3222	K-3230
50P-1033	575-600V	K-3223	K-3231

Bill of Material

Item	Part No.	Description	Qty
1	See Chart	Transformer (1 VA)	2
2	See Chart	Transformer (25 VA)	2
3	K-1274	Relay Flange Mounted	2

Bill of Material

Item	Part No.	Description	Qty
1	See Chart	Transformer (25 VA)	2
2	See Chart	Transformer (1 VA)	2
3	K-1260	Coil Control Relay (24V)	2

Katolight Service - Master Repair Manual - Page 4398

Delayed / Closed Transition

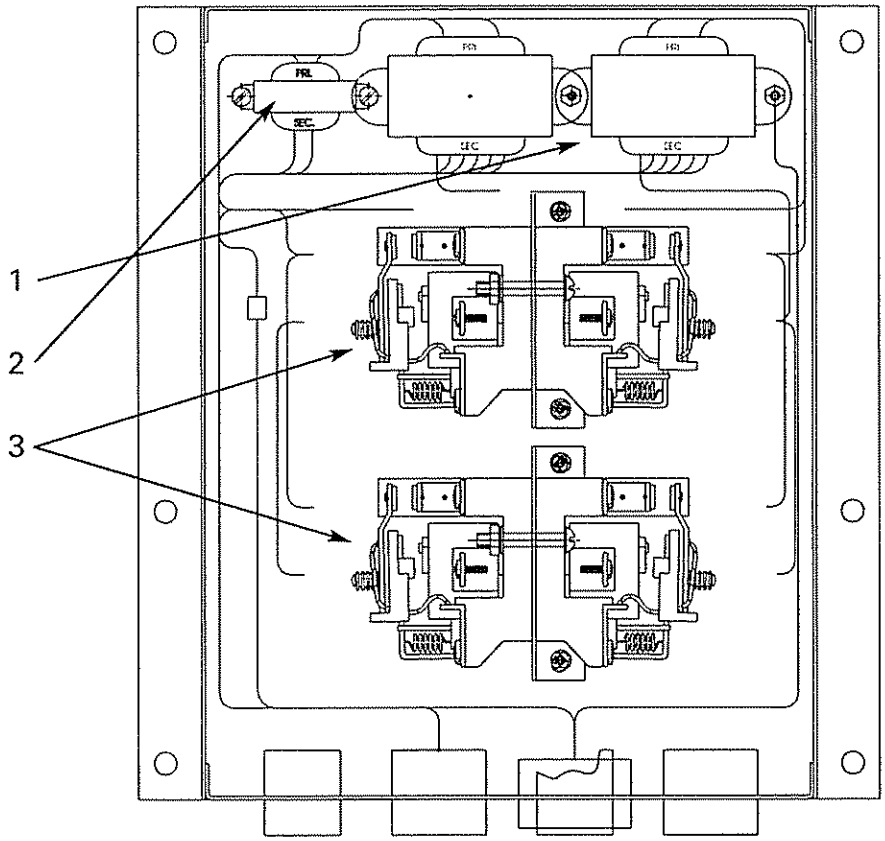

Figure 14

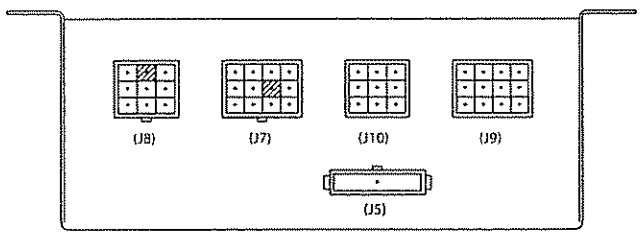

Transformer Usage

R/T Box Assembly Part No.	Primary Voltage at 50/60 Hz	1 VA XFMR Part No.	25 VA XFMR Part No.
50P-1034	120V	K-3216	K-3224
50P-1035	208-220V	K-3217	K-3225
50P-1036	230-240V	K-3218	K-3226
50P-1037	277V	K-3219	K-3227
50P-1038	380-400V	K-3220	K-3228
50P-1039	416-440V	K-3221	K-3229
50P-1040	460-480V	K-3222	K-3230
50P-1041	575-600V	K-3223	K-3231

Bill of Material

Item	Part No.	Description	Qty
1	See Chart	Transformer (25 VA)	2
2	See Chart	Transformer (1 VA)	2
3	K-1260	Coil Control Relay (24V)	4

Katolight Service - Master Repair Manual - Page 4399

Standard Transition R/T Box Schematic

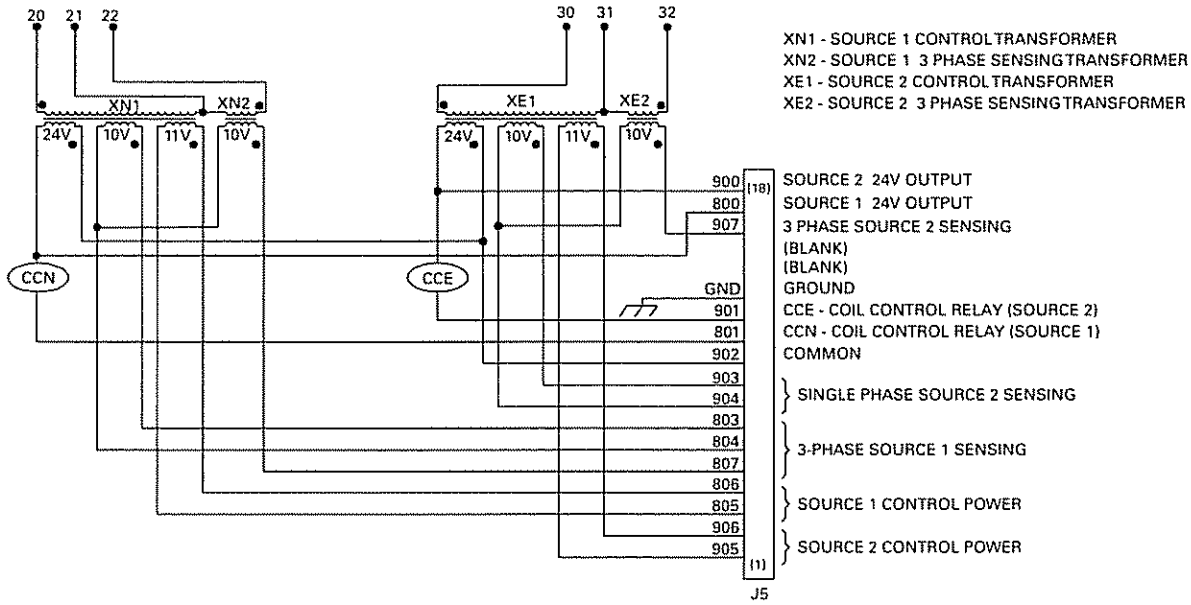

Figure 15

Delayed / Closed Transition R/T Box Schematic

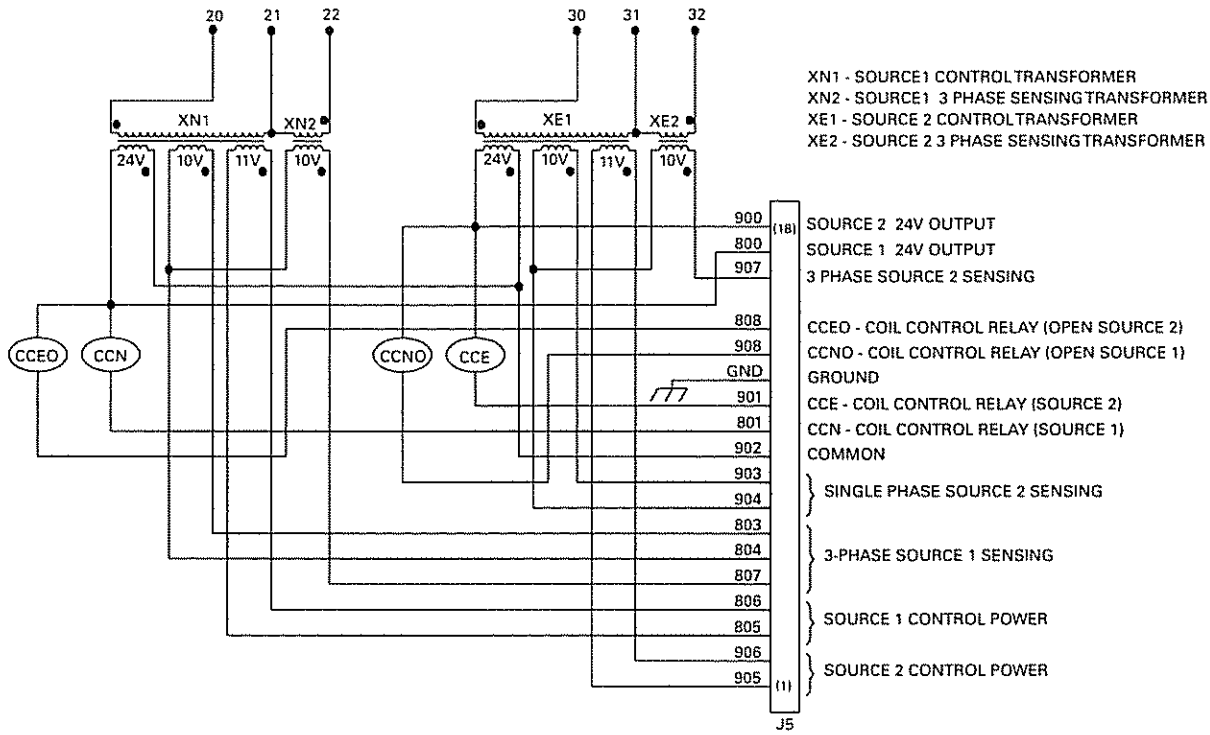

Figure 16

Katolight Service - Master Repair Manual - Page 4400

⚠ DANGER ⚠

HAZARDOUS VOLTAGES CAN CAUSE SEVERE INJURY OR DEATH.
These charts may indicate problems that require authorized GE Zenith service personnel.
Hazardous voltages may exist on termination plugs other than those that go into the Entelli-Switch 250.

General Troubleshooting

The following troubleshooting guide is used to recognize, and determine basic faults. When using this guide, it will ask several questions about the condition of the switch. This guide will then list an order of the possible faults. You will then look at the first suspected fault to determine if it is the problem. If it is not a fault, you go to the second suspected fault. If you go through all of the suspected faults, or the chart instructs you to, call a GE Zenith Representative for further assistance.

NOTE: When you use the troubleshooting charts, the Annunciation column refers to the LED's on the control panel.

Symptom	Annunciation	Possible Cause(s)	Corrective Action
Engine does not START	SOURCE 2 AVAILABLE LED off	Engine start wires not terminated properly	Check engine start connections
		Generator is in OFF position	Investigate why Engine Control Switch was turned off
Engine does not stop	LCD Display - "TD Engine Cool Down"	U timing cycle not complete	Check U timer setting
	SOURCE 1 POSITION, and SOURCE 1 and SOURCE 2 AVAILABLE LEDs on, but U timer has timed out	Engine start wires not terminated correctly	Check Engine Start Connections
		Generator in MANUAL	Place generator in AUTO
ATS will not transfer to SOURCE 2 ZTG Series	SOURCE 2 AVAILABLE LED off	SOURCE 2 voltage or frequency not within acceptable parameters	Check: Engine Start Connections, Generator Breaker, Generator Output, and Engine Control Switch
	None	Power supply connector unplugged	Plug in connector
	LCD Display - "S1 _ _ _ _ TD XFR S1>S2 Time Remaining _ _ _ _"	**W** timing cycle not complete	Check **W** Timer setting
ATS will not transfer to SOURCE 1 ZTGD Series	LCD Display - "ATS Open Time Remaining _ _ _ _"	**DW** timing cycle not complete	Check **DW** Timer setting
	SOURCE 1 AVAILABLE LED off	SOURCE 1 voltage or frequency not within acceptable parameters	Check utility and utility breakers
	None	Power supply connector unplugged	Plug in connector
	LCD Display - "Diagnostic Code 001"	Limit switch or RT box connector unplugged	Call Technical Services
	LCD Display - "S1 OK Time Remaining _ _ _ _ Bypass"	**T** timing cycle not complete	Check **T** Timer setting
	LCD Display - "ATS Open Time Remaining _ _ _ _"	**TD** timing cycle not complete	Check **DT** Timer setting

Table 4

Katolight Service - Master Repair Manual - Page 4401

⚠ CAUTION ⚠

Due to hazardous voltage and current, GE Zenith recommends that a GE Zenith Certified technician or a qualified electrician must perform the installation and maintenance of the switch.

⚠ WARNING ⚠

Both power sources must be disconnected before manual operation of the switch.

A preventive maintenance program will insure high reliability and long life for the transfer switch. The preventive maintenance program for the transfer switch should include the following items:

Inspection and Cleaning

The switch should be inspected for any accumulation of dust, dirt, or moisture, and should be cleaned by vacuuming or wiping with a dry cloth or soft brush. do not use a blower since debris may become lodged in the electrical and mechanical components and cause damage.

Remove the transfer switch barriers and check the condition of the contacts. Any surface deposits must be removed with a clean cloth (do not use emery cloth or a file). If the contacts are pitted or worn excessively, they should be replaced. A general inspection of mechanical integrity should be made to include loose, broken or badly worn parts.

Servicing

All worn or inoperative parts must be replaced using GE Zenith recommended replacement parts. Please refer to the Replacement Parts manual for specific part information and ordering procedures. Please contact the GE Zenith Technical Services Department for the Replacement Parts manual.

The operating mechanism of the transfer switch is lubricated with Lubriplate 105. The lubricant applied at the factory provides adequate lubrication for the lifetime of the switch. Should debris contaminate the mechanism, clean and apply additional Lubriplate.

GE Zenith can provide complete preventative maintenance services. Please contact the GE Zenith Technical Services Department for additional information.

CDT battery replacement - lithium batteries may last up to 10 years, however it is recommended that battery replacement be included in a 3-5 year service cycle. The battery maintains the exerceser memory only and does not otherwise affect the operation.

Testing

A manual operator handle is provided with the transfer switch for maintenance purposes only. Manual operation of the switch must be checked before it is operated electrically. **Both power sources must be disconnected before manual operation of the switch.** Insert the handle and operate the transfer switch between the Source 1 and Source 2 positions. The transfer switch should operate smoothly without binding. Return the switch to Source 1 position, remove the handle, and return it to the holder provided.

After completing the inspection, cleaning and servicing of the transfer switch, reinstall the switch cover, and close and lock the cabinet door. Reclose the circuit breakers feeding the utility and generator sources to the switch.

Initiate the electrical transfer test by activating the TS test switch. P timer will time out and the microcontroller will send an engine start signal. When the W time has elapsed, the switch will complete its transfer by closing into Source 2.

Deactivating the test switch will start retransfer to Source 1. The switch will complete its retransfer to Source 1 after the time delay of the T timer. The U engine overrun timer allows the engine generator to run unloaded for a preset cool down period.

NOTE: A periodic test of the transfer switch under load conditions is recommended to insure proper operation. (See National Electric Code articles 700 and 701).

⚠ WARNING ⚠

When performing a hi-pot or dielectric test on the power section, DISCONNECT the control panel plugs from the microprocessor to avoid potential damage.

Katolight Service - Master Repair Manual - Page 4402

Katolight Service - Master Repair Manual - Page 4403



GE Zenith Controls

A Product of GE Industrial Systems
General Electric Company
830 West 40th Street, Chicago, IL 60609 USA
773 299-6600, Fax: 773 247-7805
www.geindustrial.com

GE Zenith Controls

MX150 / MX250
Spare Replacement
Microprocessor Controller

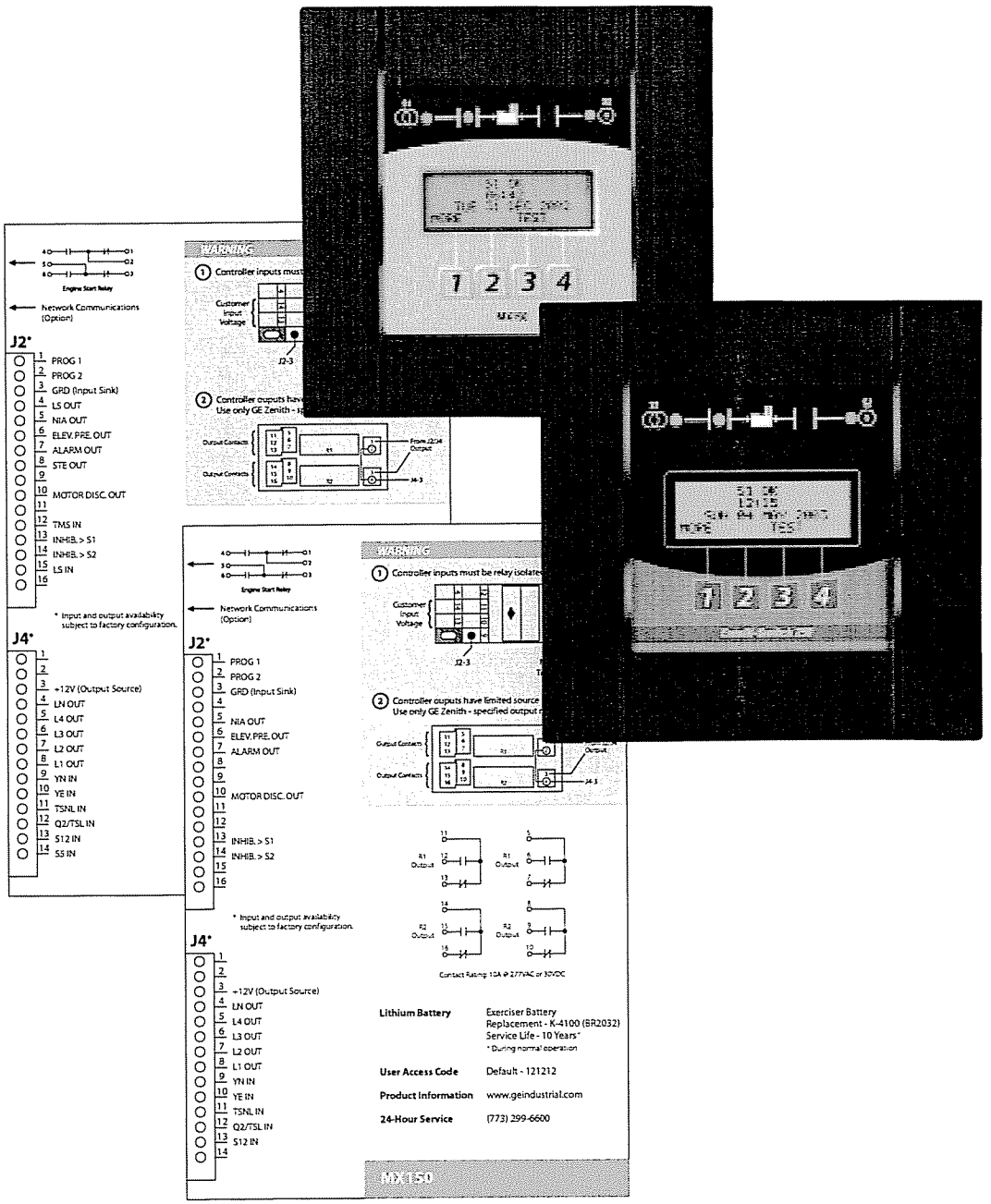

O-4059
10/04

Instruction Bulletin

Authorized Service

For GE parts and service, call: (773) 299-6600

Table of Contents

	Page
Introduction	2
Safety / Inspection	3
Equipment Inspection and Storage	3
Final Equipment Inspection	3
Installation	4
Required Materials	4
Installing the Replacement Controller	4
Configuration	5
Programming the Replacement Controller	5
Option Menu Selections	6-7

Introduction

GE Zenith Transfer Switches are used to provide a continuous source of power for lighting and other critical loads by automatically transferring from source 1 power to source 2 power in the event that source 1 voltage falls below preset limits.

Voltage sensing and system control is performed via a state-of-the-art microcontroller located on the cabinet door. It is designed to give highly accurate control of the transfer switch system.

All GE Zenith transfer switches are designed for use on emergency or standby systems, and are rated for total system or motor loads. Transfer switches are UL Listed under Standard 1008 and CSA Certified under Standard C22.2 No. 178 and IEC Listed under Standard 947.

NOTES: A protective device such as a molded case circuit breaker or fused disconnect switch MUST be installed on both sources of incoming power for circuit protection and as a disconnection device.

All references made within this manual about the term "S1" or "Source 1" relate to a Normal Power Source. All references made about the term "S2" or "Source 2" relate to an Emergency or Alternative Power Source.

Safety / Inspection

⚠ DANGER ⚠

HAZARDOUS VOLTAGE
(Can Cause Severe Injury or Death)

Turn OFF all power before installation, adjustment, or removal of transfer switch or any of its components.

The safe operation of your switch is GE Zenith's focus. The proper storage, installation, operation and maintenance will help increase the life of the switch.

⚠ CAUTION ⚠

Due to hazardous voltage and current, GE Zenith recommends that a GE Zenith Certified technician or a qualified electrician must perform the installation and maintenance of the switch.

Equipment Inspection and Storage

Once you have received the controller, inspect it for any damage. If any damage is found or suspected, file a claim as soon as possible with the carrier and notify the nearest GE Zenith representative.

Before installation, if it is necessary, store the transfer switch in a clean dry place, protected from dirt and water. Provide ample air circulation and heat, if necessary, to prevent condensation.

Storage Temperature	Operating Temperature (Ambient):	Humidity
-30°C to +75°C (-22°F to +167°F)	**40-400 AMP** *(molded shell)* -20°C to +65°C (-4°F to +149°F) **40-4000 AMP** *(all other frame and panel types)* -20°C to +60°C (-4°F to +140°F)	5% to 95% (non-condensing)

Table 1

Final Equipment Inspection

Prior to energizing the transfer switch:

1. Remove any debris with a vacuum.
2. Verify that all cabled connections are correct and that phase rotation of both sources match.
3. Check engine start connections.
4. Verify the correct connection of all control wires.
5. Check settings of all timers and adjust as necessary.
6. Adjust any optional accessories as required.
7. Check the lug torque values of the power connections.

   NOTE: Lug torque values are specified in the power panel manual.

8. Make sure that all covers and barriers are installed and properly fastened.

   NOTE: Power panels ship from GE Zenith in Source 1 Position.

⚠ WARNING ⚠

Do not use a blower since debris may become lodged in the electrical and mechanical components and cause damage.

For more details on the operation and maintenance of the automatic transfer switch, please consult the manual included with your switch.

Katolight Service - Master Repair Manual - Page 4407

Installation

The MX Spare Replacement Controller is designed to be used whenever an MX150 or MX250 ATS Controller requires field replacement. Setup and configuration are required before use. Complete factory-like Option programming can be done using the special MPI One-Time-use code included with this kit. The MPI Code is located on the backside of the battery pull-tape included with every new controller (Fig. 1).

The MPI number is unique for each controller and can only be used to configure the ATS options once as part of a field replacement. If the battery pull-tape is no longer available or, if the Controller is part of a job order, the Controller will not be able to be field programmed.

⚠ WARNING ⚠

It is important to know the previous configuration and settings for the ATS Controller being replaced. Since this RPL kit can be configured for any set of options offered by GE-Zenith, configuring improper options for use with the original ATS can lead to miss-operation and void all other product warranties. Contact Zenith Sales or Technical Support if you are not sure of the previous options and settings.

Required Materials

- Replacement MX150 or MX250 Controller
- Programming Jumper J6 (included)
- Original ATS Option and settings

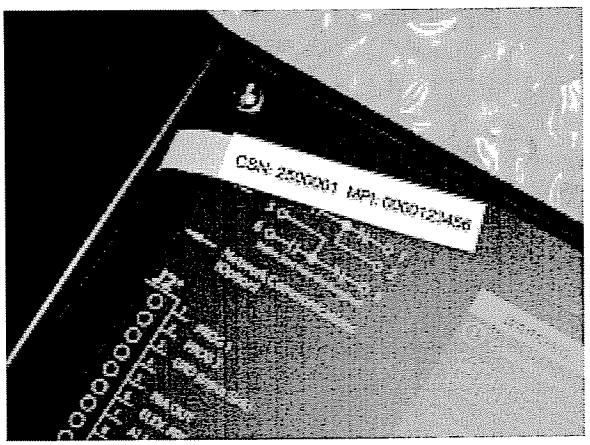

Figure 1

Installing the Replacement Controller

1. Unpack the Controller by removing it from the protective bag. Find the J6 programming Jumper included (Fig. 2), and plug it into the J6 connector on the new Controller as shown in Figure 3.

2. Replace the existing Controller and transfer all din rail options, electrical connections, network card (See Addendum A), etc., from the old controller. Tighten all mounting hardware as necessary.

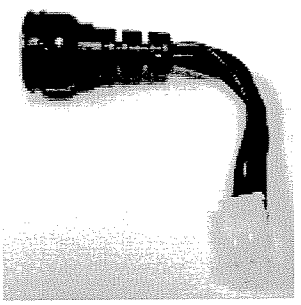

Figure 2

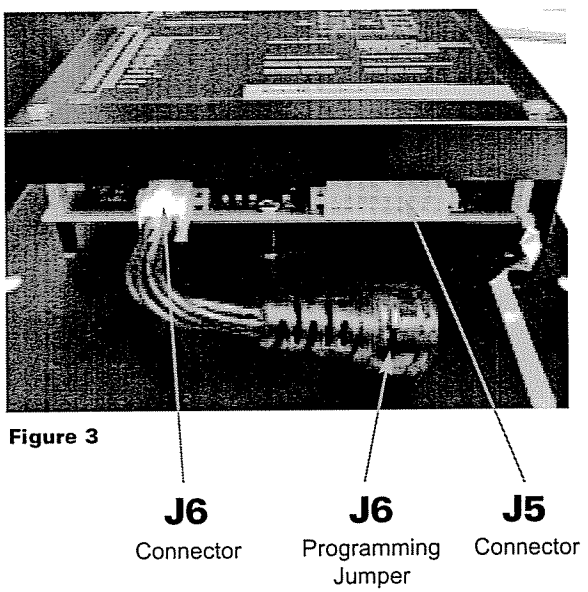

Figure 3

Katolight Service - Master Repair Manual - Page 4408

Programming the Replacement Controller

Controller Options - Perform the following steps and refer to the illustrations (Figure 4-7) to prepare the Controller for option configuration:

⚠ WARNING ⚠

Avoid cycling power until all Option choices have been SAVED. After power cycle, no other changes can be made using the MPI One-Time Code.

1. With steps 1 and 2 completed from page 1, close the utility-side breaker (normal power).
2. After a brief startup delay, the screen in fig. 4 should appear.
3. Depress and hold keys 1 and 4 Simultaneously until the screen in fig. 5 appears. Release keys 1 and 4.
4. Using the MPI code printed on the battery-pull tape, enter the 6 digit number preceded by 0000, using the up and down arrows to increase and decrease each number, and the SAVE key to enter. If a mistake is made, use the BACK key to redo the entry (Fig. 6).
5. If the MPI code was entered correctly, the screen in Fig. 7 should appear. This is the entry point to the ATS Option Menu.

Using the Option list provided by Technical Support, scroll down using the MORE key to see and select the appropriate ATS Options (Fig. 8-25).

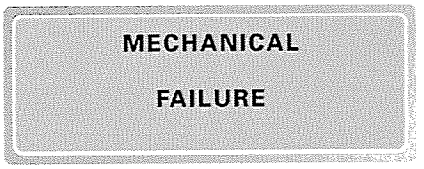

Figure 4

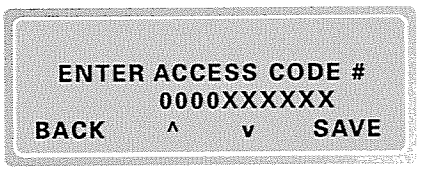

Figure 5

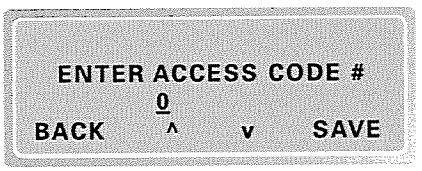

Figure 6

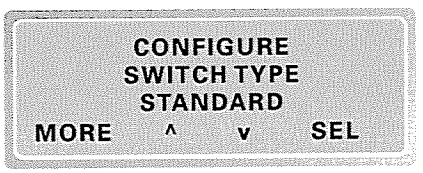

Figure 7

Katolight Service - Master Repair Manual - Page 4409

Option Menu Selections

To find and change an Option, use the MORE key to scroll through the menu loop. At the selected Option, press the SEL key to select the Option, then use the Up (^) and Down (V) arrows to see the possible choices. To save the choice, press the SAVE key.

⚠ WARNING ⚠

All menu items may be selected and changed as many times as needed. However, because this Replacement Controller uses a "One time use" MPI code, once the POWER is cycled, all selections are "locked" and no further changes will be possible without calling Technical Support.

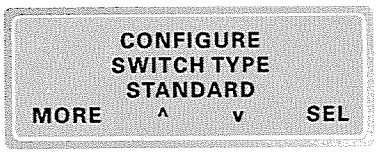

Figure 8 **Switch Type:** Standard (Standard or Delay)

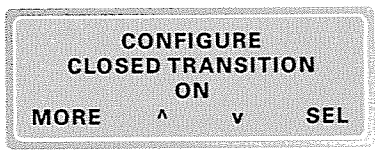

Figure 9 **Closed Transition:** Off (On or Off)

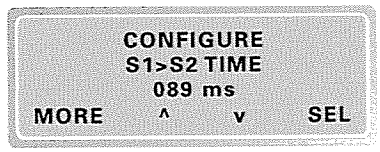

Figure 10 **S1>S2 Time:** 89 ms (50 to 300 ms)

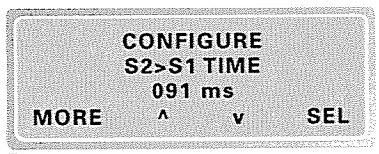

Figure 11 **S2>S1 Time:** 91 ms (50 to 300 ms)

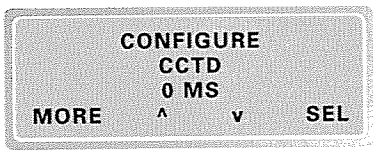

Figure 12 **CCTD:** 0 ms (0 ms or 300 ms)

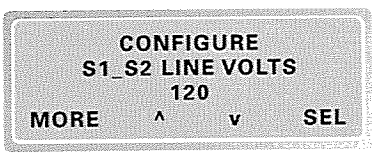

Figure 13 **S1 S2 Line Volts:** 120 (120, 208, 220, 230, 240, 277, 380 400, 416, 440, 460, 480, 575, 600)

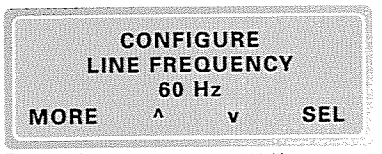

Figure 14 **Line Frequency:** 60 Hz (50 or 60 Hz)

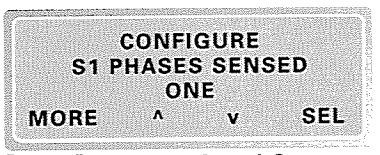

Figure 15 **S1 Phases Sensed:** One (One or Three)

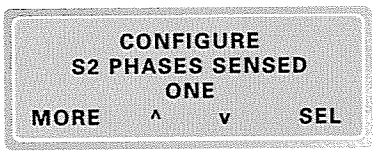

Figure 16 **S2 Phases Sensing:** One (One or Three)

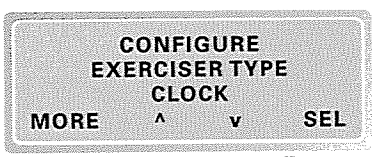

Figure 17 **Exerciser Clock Type:** Timer (Timer or Clock)

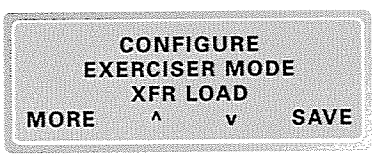

Figure 18 **Exerciser Mode:** XFR Load (XFR Load or No XFR)

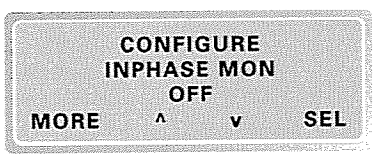

Figure 19 **In Phase Monitor:** Off (On or Off)

Katolight Service - Master Repair Manual - Page 4410

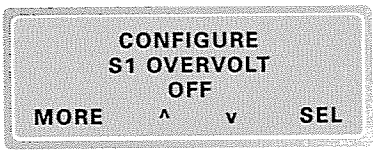

Figure 20 **S1 Over Voltage:** Off
(On or Off)

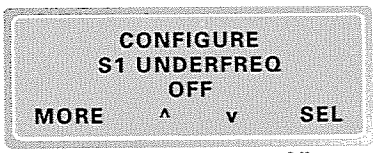

Figure 21 **S1 Under Frequency:** Off
(On or Off)

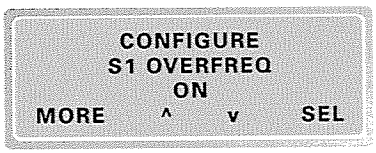

Figure 22 **S1 Over Frequency:** On
(On or Off)

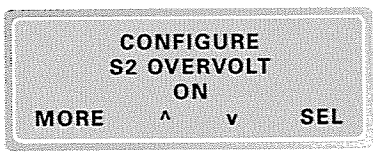

Figure 23 **S2 Over Voltage:** On
(On or Off)

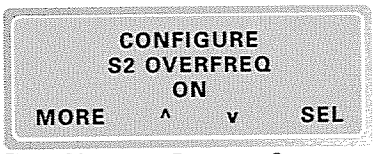

Figure 24 **S2 Over Frequency:** On
(On or Off)

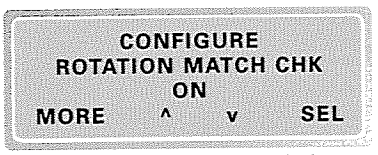

Figure 25 **Rotation Match Check:** On
(On or Off)

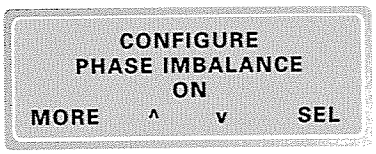

Figure 26 **Phase Imbalance:** On
(On or Off)

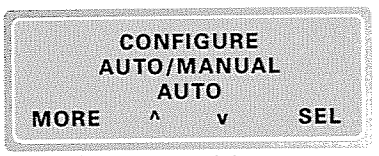

Figure 27 **Auto/Manual:** Auto
(Auto, Man, S5, S12)

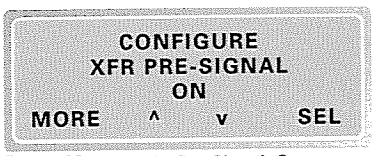

Figure 28 **Transfer Pre-Signal:** On
(On or Off)

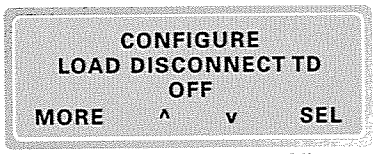

Figure 29 **Load Disconnect TD:** Off
(On or Off)

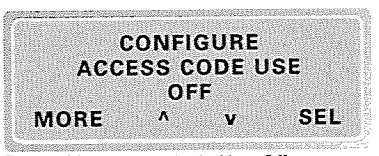

Figure 30 **Access Code Use:** Off
(On or Off)

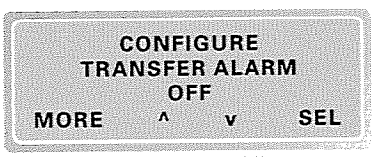

Figure 31 **Transfer Alarm:** Off
(On or Off)

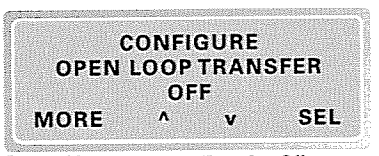

Figure 32 **Open Loop Transfer:** Off
(On or Off)

Katolight Service - Master Repair Manual - Page 4411

Replacement Parts

50P-1160SPR ....MX150 Controller Replacement Kit
50P-1161SPR ....MX250 Controller Replacement Kit
50W-1211 .....J6 Programming Plug

GE Zenith Controls

A Product of GE Consumer & Industrial
General Electric Company
830 West 40th Street, Chicago, IL 60609 USA
773 299-6600, Fax: 773 247-7805
www.geindustrial.com

GE Zenith Controls

ZTG/ZTGD Series Transfer Switches
40-3000 Amps

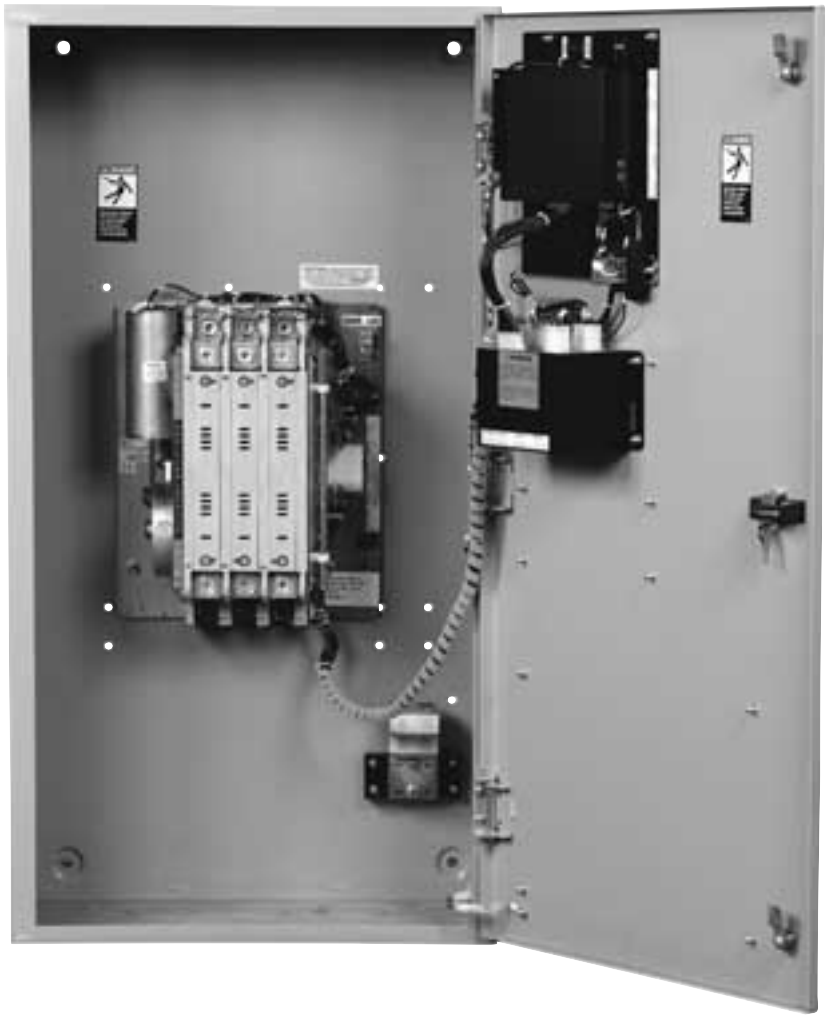

70R-1000C
12/03

Katolight Service - Master Repair Manual - Page 4413

Operation and Maintenance Manual

Authorized Service

For GE Zenith parts and service, call: (773) 299-6600

Table of Contents

	Page
Introduction	2
Safety	3
Equipment Inspection and Storage	3
Final Equipment Inspection	3
Installation	3
Mounting	3
Power Connections	4
Engine Start Control Connections	4-6
Initial Energization	6-7
MX150 Microprocessor Controller	8
Overview	8
LCD & Keypad	9
User Setting for Voltage & Frequency	10
Standard Features, MSTDG Option Pkg.	10-11
Standard Features, MEXEG Option Pkg.	12
Optional Accessories	13
How to Set the System Clock	14
CDT One Event Timer Exerciser	14-15
CDP Clock Exerciser	16
User Setup - CFG Menu	17
User Setup - SET Menu	18
User Setup - System Info	19
Testing	20
Standard Transition	20
Delayed Transition	20
Sequence of Operation	21
Standard Transition	21
Delayed Transition	21
Relay/Transformer (R/T Box)	22
Standard	22
Delay	23
Schematics	24
Troubleshooting & Diagnostics	25
Maintenance and Testing	26
Inspection and Cleaning	26
Servicing	26
Testing	26
Power Panel & Replacement Parts	27
Standard Transition	27
40-225 Amps	27
225-600 Amps	28
800-1200 Amps	29
1600-3000 Amps	30
Delayed Transition	31
40-600 Amps	31
800-1200 Amps	32
1600-3000 Amps	33

Introduction

GE Zenith Transfer Switches are used to provide a continuous source of power for lighting and other critical loads by automatically transferring from source 1 power to source 2 power in the event that source 1 voltage falls below preset limits.

Voltage sensing and system control is performed via a state-of-the-art microcontroller located on the cabinet door. It is designed to give highly accurate control of the transfer switch system.

All GE Zenith transfer switches are designed for use on emergency or standby systems, and are rated for total system or motor loads. Transfer switches are UL Listed under Standard 1008 and CSA Certified under Standard C22.2 No. 178 and IEC Listed under Standard 947.

NOTES: A protective device such as a molded case circuit breaker or fused disconnect switch MUST be installed on both sources of incoming power for circuit protection and as a disconnection device.

All references made within this manual about the term "S1" or "Source 1" relate to a Normal Power Source. All references made about the term "S2" or "Source 2" relate to an Emergency or Alternative Power Source.

Safety / Installation

⚠ DANGER ⚠

HAZARDOUS VOLTAGE
(Can Cause Severe Injury or Death)

Turn OFF all power before installation, adjustment, or removal of transfer switch or any of its components.

The safe operation of your switch is GE Zenith's focus. The proper storage, installation, operation and maintenance will help increase the life of the switch.

⚠ CAUTION ⚠

Due to hazardous voltage and current, GE Zenith recommends that a GE Zenith Certified technician or a qualified electrician must perform the installation and maintenance of the switch.

Equipment Inspection and Storage

Once you have received the transfer switch, inspect it for any damage. This includes damage to the enclosure, power panel, control panel and wiring harness. If any damage is found or suspected, file a claim as soon as possible with the carrier and notify the nearest GE Zenith representative.

Before installation, if it is necessary, store the transfer switch in a clean dry place, protected from dirt and water. Provide ample air circulation and heat, if necessary, to prevent condensation.

Storage Temperature	Operating Temperature (Ambient):	Humidity
-30°C to +75°C (-22°F to +167°F)	**40-400 AMP** *(molded shell)* -20°C to +65°C (-4°F to +149°F) **40-4000 AMP** *(all other frame and panel types)* -20°C to +60°C (-4°F to +140°F)	5% to 95% (non-condensing)

Final Equipment Inspection

Prior to energizing the transfer switch:

1. Remove any debris incurred, with a vacuum, due to shipment or installation.

⚠ WARNING ⚠

Do not use a blower since debris may become lodged in the electrical and mechanical components and cause damage.

2. Verify that all cabled connections are correct and that phase rotation of both sources match.
3. Check engine start connections.
4. Verify the correct connection of all control wires.
5. Check settings of all timers and adjust as necessary.
6. Adjust any optional accessories as required.
7. Check the lug torque values of the power connections.

   NOTE: Lug torque values are specified in table 2 on pg.4.

8. Make sure that all covers and barriers are installed and properly fastened.

   NOTE: Power panels ship from GE Zenith in Source 1 Position.

Each GE Zenith transfer switch is factory wired and tested. A complete information package is furnished with each switch which includes:

a. Sequence of operation.
b. Description and operation of all accessories supplied.
c. Power panel connection diagram and schematic.
d. Description and identification of all customer field connections.

Installation of GE Zenith transfer switches includes:

a. Mounting the transfer switch cabinet.
b. Connection of Source 1, Source 2, and Load cables or bus bars.
c. Connection of external control circuits as required.

Mounting

Adequate lifting means must be used to mount the transfer switch into place. The recommended method for moving the transfer switch using the lifting eyes, where supplied, and a spreader bar is illustrated in *Figure 1.* Enough room should be allowed to open the cabinet doors fully for inspection and servicing of the switch per NEC and local codes.

⚠ CAUTION ⚠

Before drilling conduit entry holes or any accessory mounting holes, cover and protect the switch and control panel to prevent dirt and metal fragments from entering the mechanical and electrical components.

Failure to do so may result in damage and malfunction of the switch.

Katolight Service - Master Repair Manual - Page 4415

⚠ DANGER ⚠

HAZARDOUS VOLTAGE
(Can Cause Severe Injury or Death)

Turn OFF all power before installation, adjustment, or removal of transfer switch or any of its components.

Power Connections

GE Zenith transfer switches are supplied with UL listed solderless screw type terminals as standard for the Source 1, Source 2 and Load power connections. *Table 1* lists the number and sizes of cable lugs supplied as standard for each switch amp rating.

Connect the Source 1, Source 2, and Load conductors to the clearly marked terminals on the transfer switch. Remove surface oxides from cables by cleaning with a wire brush. Verify that all connections are correct before tightening the lugs. All cable lug connections must be tightened to the proper torque values as shown in *Table 2*.

NOTE: Do not run cables or wiring behind front-connected transfer switches.

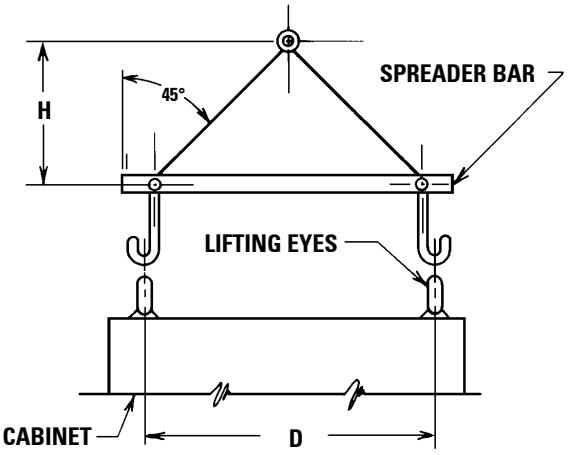

Figure 1

NOTE: When lifting the switch using a spreader bar, height H must be equal to half of distance D.

Power Connections: Screw Type Terminals for External Power Connections

Switch Size (Amps)	Source 1, Source 2 & Load Terminals		Neutral Bar (When Required)	
	Cable Per Pole	Range of Wire Sizes	No. of Cables	Range of Wire Sizes
40	1	#8 to 3/0 AWG	3	#14 to 1/0 AWG
80	1	#8 to 3/0 AWG	3	#14 to 1/0 AWG
100	1	#8 to 3/0 AWG	3	#14 to 1/0 AWG
150	1	#8 to 3/0 AWG	3	#6 AWG to 350 MCM
200, 225	1	#6 AWG to 250 MCM	3	#6 AWG to 350 MCM
260	1	#6 AWG to 350 MCM	3	#6 AWG to 350 MCM
400	1	#4 AWG to 600 MCM	4	#4 AWG to 600 MCM
600	2	#2 AWG to 600 MCM	8	#4 AWG to 600 MCM
800, 1000, 1200	4	#2 AWG to 600 MCM	12	#4 AWG to 600 MCM
1600, 2000 2600, 3000	8	#2 AWG to 600 MCM	24	#4 AWG to 600 MCM

Table 1

Engine Start Control Connections

Engine-start control wires connect to control terminals beside the MX150. Engine start terminals are indicated by a schematic symbol (the symbol indicates the contact state for a de-energized normal source). *Figure 3* shows the engine-start contacts.

Make all other necessary control connections to the control panel terminal blocks per the schematics supplied with the ATS.

NOTE: All control wires (18-12 AWG) must be torqued to 19 in/lbs.

Tightening Torque for Lugs

Socket Size Across Flats	Torque	
	Lb. - In.	Lb. - Ft.
1/8	45	4
5/32	100	8
3/16	120	10
7/32	150	12
1/4	200	17
5/16	275	23
3/8	375	31
1/2	500	42
9/16	600	50

Table 2

Katolight Service - Master Repair Manual - Page 4416

⚠ DANGER ⚠

HAZARDOUS VOLTAGE
(Can Cause Severe Injury or Death)

Turn OFF all power before installation, adjustment, or removal of transfer switch or any of its components.

Control Connections

Figure 2

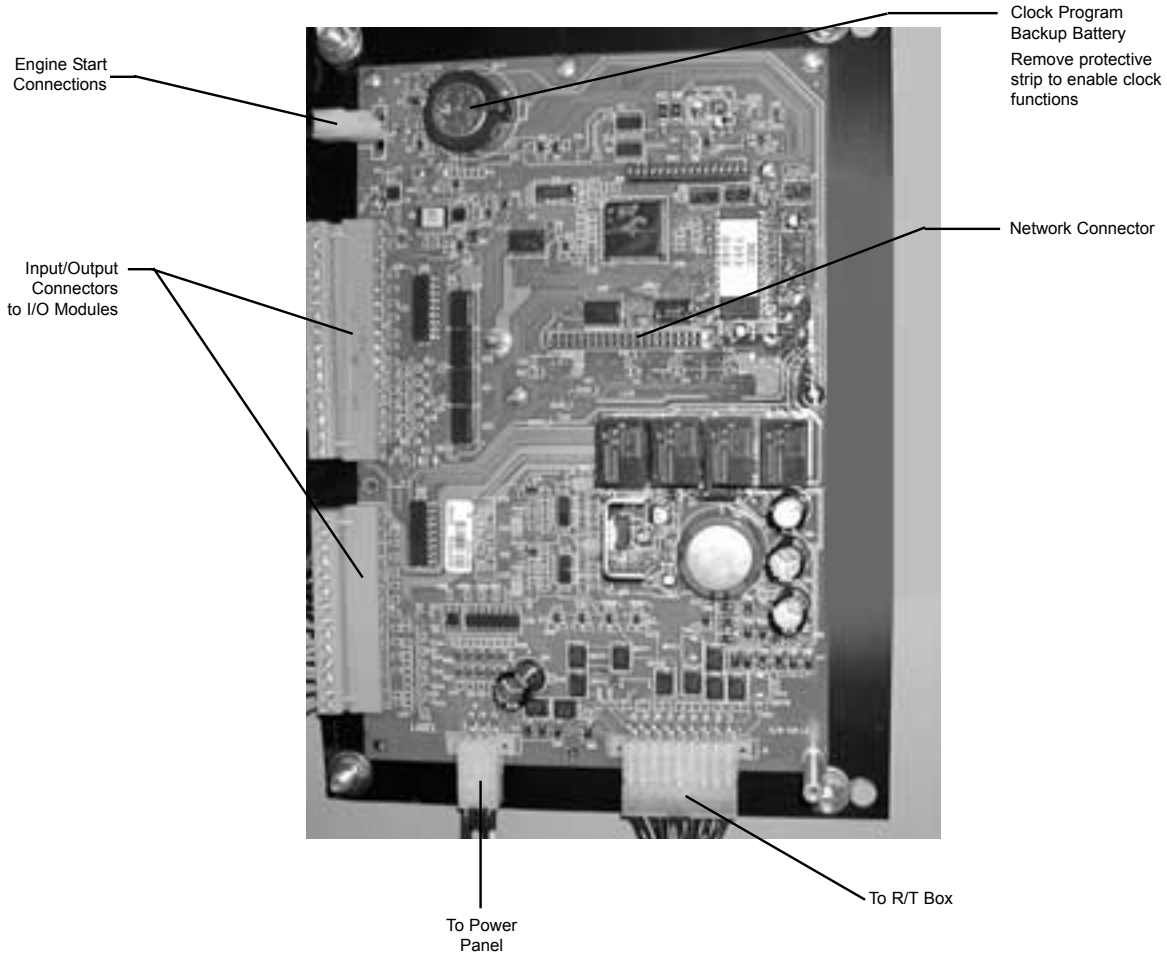

A complete information package is furnished with each transfer switch including a complete connection diagram and schematic which details all necessary control circuit field connections.

The engine start control wires connect to the engine start relay terminals located to the left of the microprocessor. Figure 2 shows the location of these terminals.

The terminals are clearly identified by a label on the microcontroller backplate. In the case of manual transfer switches, or in other applications not requiring the microprocessor, clearly marked terminal blocks are provided in the upper left corner of the control panel for the engine start control wires.

Katolight Service - Master Repair Manual - Page 4417

⚠ DANGER ⚠

HAZARDOUS VOLTAGE
(Can Cause Severe Injury or Death)

Turn OFF all power before installation, adjustment, or removal of transfer switch or any of its components.

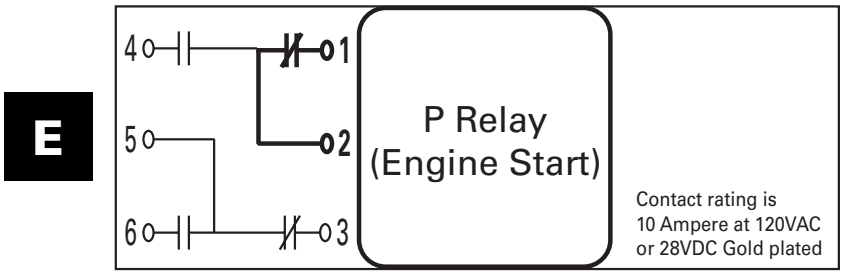

Figure 3

Engine Start Control Connections

The engine-start terminals are clearly identified by a label on the microcontroller backplate. In the case of manual transfer switches, or in other applications not requiring the microprocessor, clearly marked terminal blocks are provided in the upper left corner of the control panel for the engine start control wires.

Terminals for field connections to the A3 Source 2 auxiliary contacts and the A4 Source 1 auxiliary contacts are also provided. These terminals are clearly marked and appear on the side of the power panel. On 400 amp metal frame units these terminals appear on the bracket above the operator handle.

Initial Energization

Before proceeding, refer to the information package supplied with the ATS and read and understand the information on all accessories provided.

1. Unlock the enclosure.
2. Open the enclosure.
3. Verify the correct system voltage.

   NOTE: The equipment rating nameplate on the transfer switch lists the voltage. See *Figure 4*.

4. Close Source 1 circuit. breaker.

   NOTE: The controller will illuminate Source 1 Available LED if proper voltage is sensed.

5. Verify the phase to phase voltages at the Normal line terminals.
6. Close the Source 2 circuit breaker.
7. Start the generator engine.

   NOTE: The controller will illuminate Source 2 Available LED when preset voltage and frequency levels are reached.

8. Verify the phase to phase voltages at Source 1 line terminals.
9. Verify that the phase rotation of Source 1 is the same as the phase rotation of Source 2.



10. Shut down the generator engine.
11. Place the starting control in the Automatic position.
12. Complete the visual inspection of the transfer switch.
13. Close the enclosure.
14. Lock the enclosure.

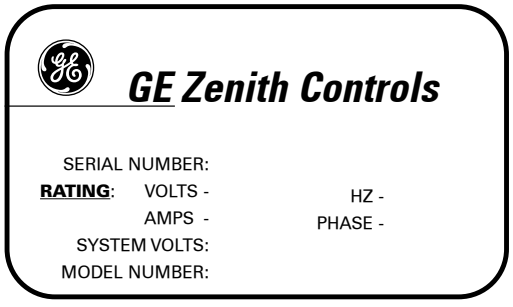

Figure 4

⚠ CAUTIONS ⚠

Certain accessories, per specific schematics, can inhibit automatic transfer.
Engine Gen-Set could start when engine control wires are attached.

Katolight Service - Master Repair Manual - Page 4418

Initial Energization *(cont'd)*

After all options and accessories are checked and verified, follow these steps to set up the ATS. Refer to MX150 display *Figure 5*. The annunciation LEDs illuminate to indicate (1) source availability, (2) ATS position, and (3) MX150 control function (timing).

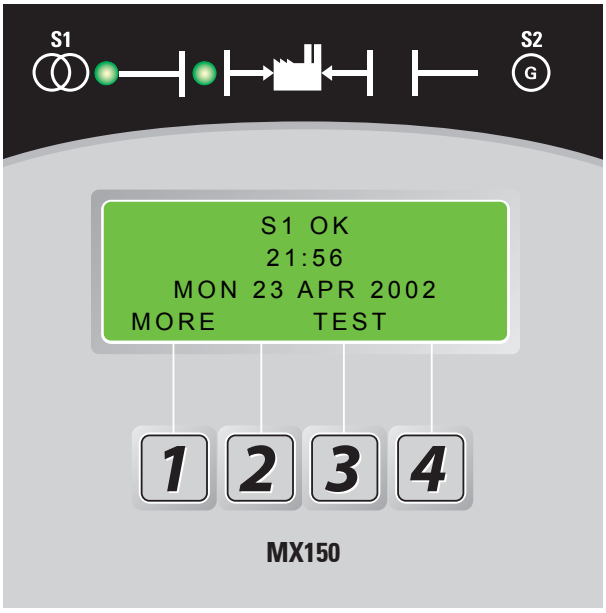

Figure 5 – LCD and keypad

1. Unlock the enclosure.
2. Open the enclosure.
3. Place the Disconnect Switch in the Inhibit.

   NOTE: This step is only performed if the "DS" Option was purchased.

4. Close the external (up-stream) Source 1 circuit breaker.

   NOTES: Source 1 Available and Source 1 Position LED's will illuminate.

   If Source 1 Available LED does not illuminate, verify that Source 1 Voltage is above the preset restore value.

   The Gen-Set will start and run while Source 2 stop Delay Timer is timing.

5. Close the External (up-stream) Source 2 line circuit breaker.
6. Start the engine generator in MANUAL mode.

   NOTE: When the voltage and frequency reach preset values, the Source 2 Available LED will illuminate.

7. Verify the phase to phase voltages at Source 2 line terminals.
8. Verify that the phase rotation of Source 2 is the same as the phase rotation of Source 1.



9. Shut down the generator's engine. (Place in Automatic Mode.)

   NOTE: Source 2 Available LED will turn off.

   NOTE: The engine generator will continue to run for the duration of Source 2 Stop Delay Timer.

10. Place the disconnect switch to ENABLE.
11. Complete the visual inspection of the transfer switch.
12. Close the enclosure.
13. Lock the enclosure.

⚠ WARNING ⚠

When performing a hi-pot or dielectric test on the power section, DISCONNECT the control panel plugs from the microprocessor to avoid potential damage.

Katolight Service - Master Repair Manual - Page 4419

MX150 Controller

Consists of two major assemblies:

I. The **Microprocessor** contains the following:

A. MX150 Board - Customer Input and Output (I/O) for system interface. Located on the left hand side of the back of the unit (see figure 6)

1. I/O accessories that can be found here are:
   a. Engine start relay P output
   b. Pre-Signal to transfer T3, W3 and UMD output (optional)
   c. Transfer Inhibit Q3 and Q7 input (optional)
   d. Remote test Q2 input (optional)
   e. Network interface ZNET input/output (optional)

B. LCD and Keypad located on the exterior of the door (see figure 7)

1. User accessibility to the following:
   a. LED indication of source availability
   b. LED indication of transfer switch position
   c. LCD screen indicates:
      (1) timer count down (numeric)
      (2) event reporting (text)
   d. Keypad provides user interface to: *[in conjunction with LCD screen]*
      (1) Setting sensors and timers
      (2) Configuring logic accessories

II. The **R/T box** (relay transformer box) contains the following: (see figure 6)

A. Relays which are required for controller output to energize the transferring mechanism of the transfer switch at line voltage.

B. Transformers which drop line voltage to control level for controller input.

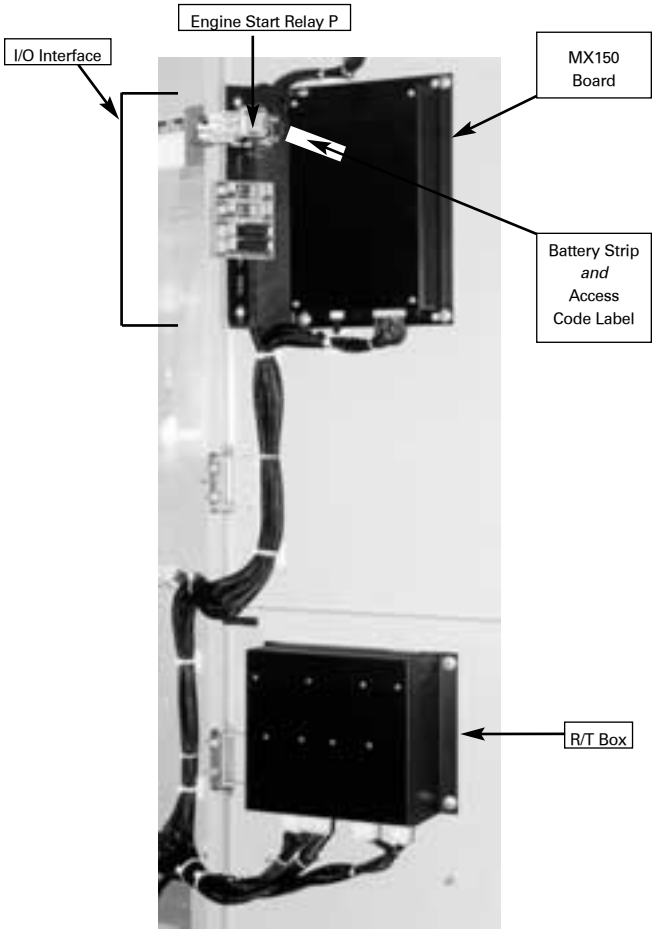

Figure 6

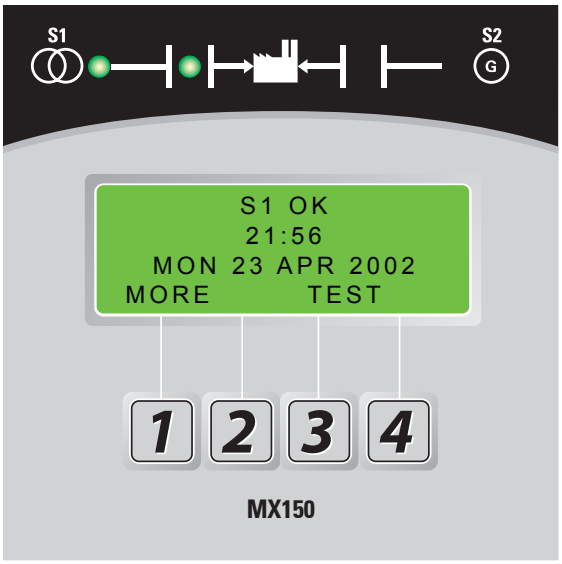

Figure 7

Katolight Service - Master Repair Manual - Page 4420

LCD & Keypad

These options are accessible through the LCD and keypad (see figure below). To become familiar with the options loaded into a particular unit, scrolling through the SET and CFG menu will show the descriptions of the options (see pages 17). These menus are the very same menus that are used to access the setting and/or configuration of these options. The SET (setting) menu is primarily used to show or change, time and voltage settings. The CFG menu is primarily used to turn an option on or off. When scrolling through these menus, no changes can be made without entry of the access code. The factory set six-digit access code is located on a white label on the back of the unit (see figure 9 pgs. 17-19).

The MX150 has many logic options. Each controller is downloaded with options at the time of manufacture. The collection of options that any one controller has is specified at the time of order placement. The following pages include all the options that can reside in the controller. Not all units include all options.

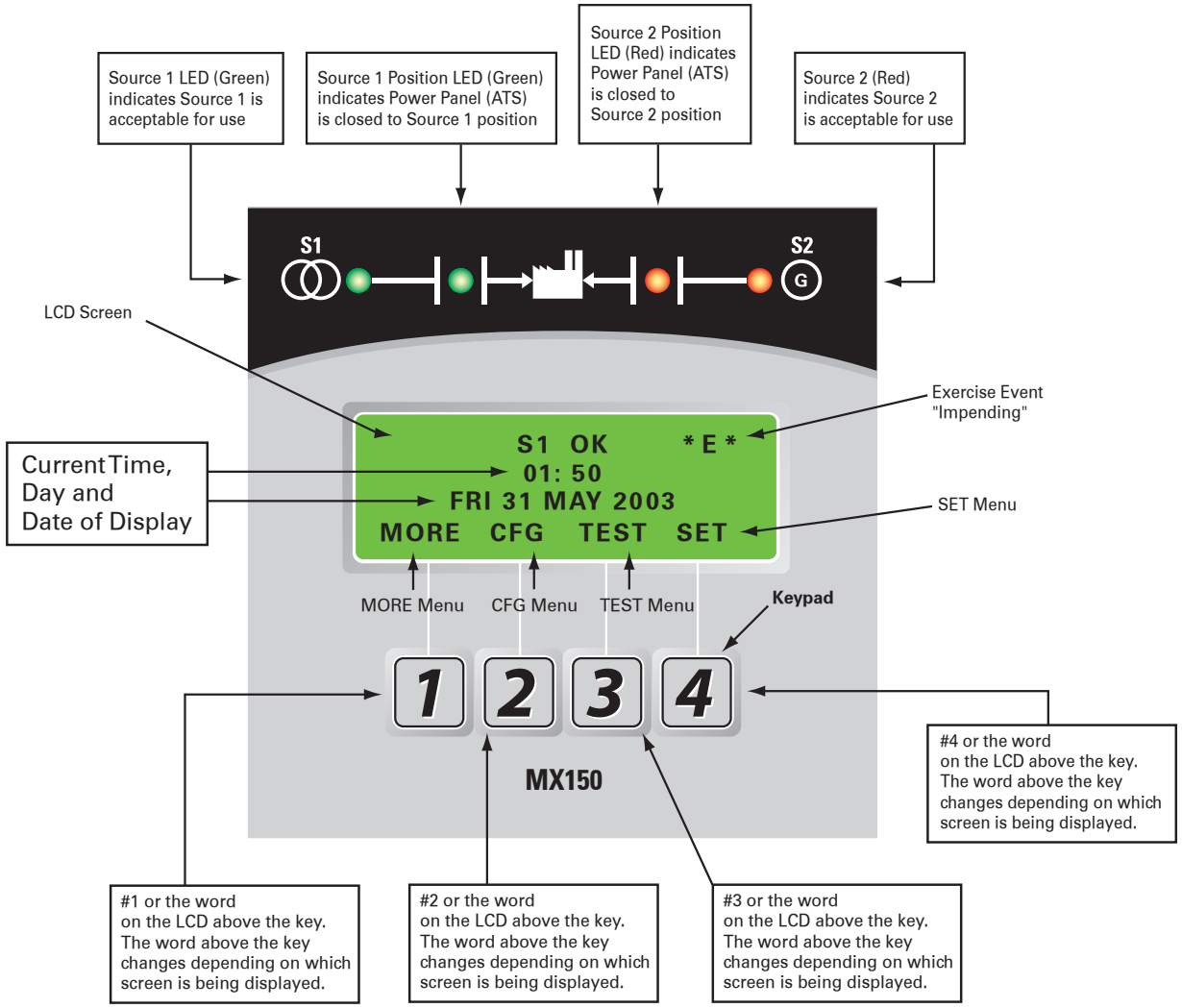

Figure 8

Katolight Service - Master Repair Manual - Page 4421

User Setting for Voltage & Frequency

Source 1

Voltage "Restore"
Factory Default: 90%
This adjustment determines the minimum acceptable voltage required to transfer to Source 1.
Adjust via the SET menu. Range is 85% to 100% in 1% increments (see page 18).
Once satisfied, the T timer will begin timing to transfer to Source 1.

Voltage "Fail"
Factory Default: 80%
This adjustment determines the low voltage threshold.
Adjust via the SET menu. Range is 75% to 98% in 1% increments (see page 18).
"Fail" must be a minimum of 2 % below "Restore" setting. Once voltage falls below threshold, P timer begins timing to signal Source 2 Generator to start.

Source 2

Voltage "Restore"
Factory Default: 90%
This adjustment determines the minimum acceptable voltage required to transfer to Source 2.
Adjust via the SET menu. Range is 85% to 100% in 1% increments (see page 18).
Once satisfied, the W timer will begin timing to transfer to Source 2.

Voltage "Fail"
Factory Default: 80%
This adjustment determines the low voltage threshold.
Adjust via the SET menu. Range is 75% to 98% in 1% increments (see page 18).
"Fail" must be a minimum of 2 % below "Restore" setting. Once voltage falls below threshold, T timer will be bypassed to expedite the transfer to Source 1.

Frequency "Restore"
Factory Default: 95%
This adjustment determines the minimum acceptable frequency required to transfer to Source 2.
Adjust via the SET menu. Range is 90% to 100% in 1% increments (see page 18).
Once satisfied, the W timer will begin timing to transfer to Source 2.

Frequency "Fail"
Factory Default: 90%
This adjustment determines the low frequency threshold.
Adjust via the SET menu. Range is 88% to 98% in 1% increments (see page 18).
"Fail" must be a minimum of 2 % below "Restore" setting.
Once satisfied, the W timer will begin timing to transfer to Source 2.

Standard Features, MSTDG Option Pkg.

6
Test Switch, Momentary

A3
Auxiliary Contact: Closed when the switch is in Source 2 position.

A4
Auxiliary Contact: Closed when the switch is in Source 1 position.

Calibrate
While monitoring the actual Phase to Phase voltage levels and Frequency with a calibrated test equipment, the Phase to Phase voltage sensing and Frequency can be adjusted accordingly. Calibration capabilities are available for Frequency and AB, BC, CA Phase to Phase voltage for both Sources. Adjust via SET menu (see page 18)

CDT
Load or NO-Load. One event exerciser with adjustable Engine exercise timer. Exercise duration can be set between 5 and 60 minutes in 1 minute increments. Can be configured to run every 1, 7, 14, or 28 days. Factory Default is 20minutes. When exerciser is impending, (*E*) appears in the upper right hand corner of LCD screen. See page 14-15 for instructions. Configured via CFG (see page 17). Set via SET menu (see page 18).

DS
Disconnect Switch, Auto/Inhibit.
Inhibits transfer in either direction when in inhibit.
Allows automatic operation when in Auto.
(800-4000 Amp units)

DT *(Delayed Transition Only)*
Time Delay from Neutral Switch position to Source 1 position. Adjustable 0-10 minutes in 1 second increments. Standard setting is 5 seconds Adjust via SET menu (see page 18)

DW *(Delayed Transition Only)*
Time Delay from Neutral Switch position to Source 2 position. Adjustable 0-10 minutes in 1 second increments. Standard setting is 5 seconds.Adjust via SET menu (see page 18)

E
Engine Start Contact

Katolight Service - Master Repair Manual - Page 4422

Std. Features, MSTDG Option Pkg. *(cont'd)*

EL/P

Event Log: Sequentially Numbered Log of 16 events that track date, time, reason and action taken

System Data: Total Life Transfers (N2P)
Days Powered Up
Total Transfers to S2
Total S1 Failures
Time S1 available in Hrs
Time S2 available in Hrs. (N1P)

K/P

Frequency Indication for S1 and S2

L

LNP Center-off position LCD-Indicator
Indicating LED lights:

- **L1** Indicates Switch in Source 2 position.
- **L2** Indicates Switch in Source 1 position.
- **L3** Indicates Source 1 available.
- **L4** Indicates Source 2 available.

P1

Time Delay Source 2 Start. Adjustable 0-10 seconds. Standard setting is 3 seconds.
Adjust via SET menu (see page 18)

Q2

Peak Shave / Remote Load Test: Input for Peak Shave or Remote Load Test. Includes automatic return to Source 1 if Source 2 fails and Source 1 present.

R2E

Under voltage sensing of Source 2 for single-phase. (R17 replaces R2E for Utility to Utility switches)

R50

In Phase Monitor this feature restricts **Live to Live Source Transfers** to occur unless both Sources are within 7 electrical degrees or less of each other. (live Source to live Source transfers usually occur during transfer back to Source 1 or during Testing). R50 does not change the operation of the Automatic Transfer Switch in a power failure mode. After all timer functions have elapsed, **the CHECKING FOR SOURCE SYNCHRONISM** will be displayed as well as the direction of transfer (S1-S2 for example denotes transfer from Source 1 to Source2). When synchronism is accomplished, transfer will take place.

Notes:
- **If S2 Frequency is less than S1 Frequency, display will show a series of (- - - - -…..) symbols.**
- **If S2 Frequency is greater than S1 Frequency, display will show a series of (+++++…..) symbols.**
- **Each (-) or (+) symbol represents 10 electrical degrees out of phase. A maximum of 18 symbols (180 electrical degrees) can be monitored.**
- **The number of (-) or (+) symbols decrease as the two sources approach synchronism and increase as the two sources drift out of synchronism.**
- **If S1 and S2 Frequencies are identical, the display will show a series of alternating symbols (ŧŧŧŧ…) which also indicate the approximate out of phase degrees**

In the event that the Sources do not come within 7 electrical degrees of each other within 60 seconds, the unit will display the message: **SYNCH CHECKING** and will allow the user to **BYPASS**. If the **BYPASS** button is pressed, the unit will display the message: **WARNING MAY CAUSE DAMAGE TO THE LOAD**. Pressing **XFR** will actually bypass the R50. Since R50 is a passive device, the length of time it takes to reach Synchronism is dependent on the frequency difference between the two Sources. Source 1 is usually a Utility and the frequency is not within the control of the consumer. Source 2 needs to be adjusted to create an adequate difference in order for the transfer to happen a timely fashion.

Note: For optimum performance, Source 2 Generator should be adjusted a Maximum of 2 Hertz above or below the Utility frequency, minimum of 0.1 Hertz. (58 to 59.9) or (60.1 to 62) Hertz. Adjustment of Generator to 60Hertz could cause lengthy transfer delay.

R50 Feature can be turned ON or OFF via CFG Menu (see page 17). Factory Default if OFF.

S13

Transfer Commit. Configured via CFG menu. (see page 17) When this Feature is set to OFF: The transfer Switch is not committed to transfer unless the outage duration is longer than the timers that precede the transfer to Source 2 position. This assumes that the outage will be an isolated event. When this Feature is set to ON: The transfer Switch is committed to transfer to Source 2 position once the W timer has begun timing, even if Source 1 power returns before the transfer to Source 2. This is to ensure that the transfer takes place, because one outage may be followed by another.

T

Time Delay (S1) Source 1 Stable Timer. To delay transfer to Source 1 (immediate retransfer on Source 2 failure). Adjustable 0-60 minutes in 1 second increments. Standard setting is 30 minutes. Adjust via SET menu (see page 18)

U

(S2) Source 2 Stop Delay Timer. Allows Engine to run unloaded after switch retransfer to Source 1. Adjustable 0-60 minutes in 1 second increments. Standard setting is 5 minutes. Adjust via SET menu (see page 18)

W

Time Delay (S2) Source 2 Stable Timer. To delay transfer to Source 2. Adjustable 0-5 minutes in 1 second increments. Standard setting is 1 second. Adjust via SET menu (see page 18)

YEN

Bypass Timers Key utilizing Keypad. When applicable, the system prompts the user to press a button to bypass (T) or (W) Timers should the user so desires.

Katolight Service - Master Repair Manual - Page 4423

Standard Features, MEXEG Option Pkg.

In addition to the features listed under the MSTDG Option Package, this enhanced package includes the following features:

A3
Additional Auxiliary contact: closed when switch is in Source 2 position.

A4
Additional Auxiliary contact: Closed when the transfer switch is in Source 1 position.

CDP (replaces CDT)
Clock Exerciser Load/ No Load: Allows the Generator to start and run unloaded or to simulate a power failure, start Generator and run under load.
Can be configured by end user for 1, 7, 14, 28, 365 day cycle.

VI
Voltage Imbalance (Three Phase)
For a three phase source, this feature monitors phase voltage ratios based on a selected range within a selected time window. Should any phase fall below the selected lower window limit or exceed the selected higher window limit within the selected time frame, the controller initiates transfer to the other source.

Range: 5% to 20% of Nominal voltage,
10 to 30 seconds window, user adjustable.
Resolution: 1% Increments
Minimum Differential: 2% between "Fail" and "Restore" settings.
Factory default: 10% "Fail", 8% "Restore, 30 Seconds.
See CFG Menu page 17 to configure ON or OFF.
See SET Menu page 18 to set Percentage and time windows

Katolight Service - Master Repair Manual - Page 4424

Optional Accessories

6A
Test Switch, Maintained / Momentary

6AP
Test Switch, Maintained / Momentary, utilizing Keypad

A1
Auxiliary Contact, operates on Source 1 line failure.

A1E
Auxiliary Contact, operates on Source 2 line failure.

A3
Auxiliary Contacts: Closed when the transfer switch is in Source 2 position.

A4
Auxiliary Contacts: Closed when the transfer switch is in Source 1 position.

A62
Sequential Universal Motor Load Disconnect Circuit. Normally closed Auxiliary contacts for Motor Loads. Open 0-60 seconds prior to transfer, after transfer, or both in either direction then re-close in timed sequence after transfer. Factory default: 20 seconds

CTAP
Alarm Panel on transfer to Source 2 with Silence button.

DS
Disconnect Switch, Auto/Inhibit.
Inhibits transfer in either direction when in inhibit.
Allows automatic operation when in Auto.
(40-600 Amp units)

HT
Heater and Thermostat.

Manual
Manual Transfer Switch transfers in either direction by depressing designated pushbuttons.

M80
Digital Power Meter with Display: Amps, Volts, and Frequency.

M82
Digital Meter w/Display of Amps, Watts, Volts, Frequency, KVA, KVAR, PF, etc.

M83A
Digital Meter w/Diplay of Amps, Watts, Volts, Frequency, KVA, KVAR, PF, etc. Plus THD capability w/Modbus.

T3/W3
Elevator Pre-Signal Auxiliary Contacts: Open 0-60 seconds prior to transfer to either direction, re-closes after transfer. Factory default: 20 seconds

UMD
Universal Motor Load Disconnect Circuit: Auxiliary Contact opens 0-5 minutes prior to transfer in either direction, re-closes after transfer. Can be configured by end user for Pre-transfer, Post-transfer, or both. Factory default: 15 seconds

VI
Voltage Imbalance (Three Phase)
For a three phase source, this feature monitors phase voltage ratios based on a selected range within a selected time window. Should any phase fall below the selected lower window limit or exceed the selected higher window limit within the selected time frame, the controller initiates transfer to the other source.

Range: 5% to 20% of Nominal voltage,
10 to 30 seconds window, user adjustable.
Resolution: 1% Increments
Minimum Differential: 2% between “Fail” and “Restore” settings.
Factory default: 10% “Fail”, 8% “Restore, 30 Seconds.
See CFG Menu page 17 to configure ON or OFF.
See SET Menu page 18 to set Percentage and time windows

ZNET
Network Communications Interface Card

Katolight Service - Master Repair Manual - Page 4425

How to Set the System Clock

How to Set the System Clock

Set System Clock, time and date

- If the clock is not set, the display will show SET SYSTEM CLOCK on the second line of the S1 OK screen.
- The S1 OK screen will show time (hours and minutes) on the second line if the system clock has been set. (Date on third line)

Setting the System Clock

(Start from **S1 OK** screen)

1. Remove battery protective white plastic strip near **P** relay. *
2. Press **MORE** then press **SET**.
3. Press **MORE** and scroll to **SET SYSTEM CLOCK** using the **MORE** key.
4. Press **SEL**.
5. **ENTER ACCESS CODE** located on the white label on the back of the controller.
6. Press **SEL**.
7. Use the up and down keys to change the hour value.
8. Press **SAVE** (this will enter this value and move cursor to minutes).
9. Use the up and down keys to change the minutes.
10. Press **SAVE** (this will enter this value and move cursor to month).
11. Use the up and down key up to change the month.
12. Press **SAVE** (This will enter this value and complete the clock setting).
13. Use the up and down keys to change the date.
14. Press **SAVE** (this will enter this value and move cursor to year).
15. Use the up and down keys to change year.
16. Press **SAVE** (this will enter this value and compete the clock setting).
17. To edit settings, press **SEL** and repeat steps 6-16.
18. If the setting is satisfactory, press **MORE** (unit then returns to the **SET** menu then press **BACK**, then **ESC**.)

* Replacement battery part #K-4100
Battery will last 5 years and provides power to retain clock function only (Controller functions without battery).

CDT One Event Timer Exerciser

Load or No-Load

One event Exerciser with adjustable Timer. Exercise duration can be set between 5 and 60 minutes in 1 minute increments. Can be configured to run every 1,7,14, or 28 days. Factory default is 20 minutes.

How to CONFIGURE (CFG) and Set (SET) the Timer Exerciser

1. Beginning from the **S1 OK** screen, press **MORE** then **CFG**.
2. Press **MORE** to scroll to **CONFIG TIMER EXERCISER** screen.
3. The third line of the **CONFG TIMER EXERCISER** will show either **DAILY**, **WEEKLY**, **14 DAY**, **28 DAY**, or **OFF**.
4. If the third line of the **CONFG TIMER EXERCISER** shows **DAILY**, **WEEKLY**, **14 DAY**, or **28 DAY** as desired, then proceed to step 10.
5. If the third line of the **CONFG TIMER EXERCISER** shows **OFF** or if another timer selection is desired, continue.
6. Press **SEL**.
7. Enter **ACCESS** code located on white label on the back of the controller.
8. Press **UP** or **DOWN** to select **DAILY**, **WEEKLY**, **14 DAY**, or 28 **DAY** as desired.
9. Press **SAVE**.
10. Press **MORE** to scroll to **CONFG TIMER EXERCISER (XFR)** or **(NO XFR)**.
11. Press Up or Down to select **XFR** (Load Transfer) or **NO XFR** (No Load Transfer).
12. Press **SAVE**.
13. Press **MORE** repeatedly to **BACK** then **S1 OK** screen.

Set (SET) the Exerciser:

14. Beginning from the **S1 OK** screen, press **MORE** then **SET**.
15. Press **MORE** repeatedly until **EXER S2 RUN TIME** screen.
16. Press **SEL**
17. Enter **ACCESS** code located on white label on the back of the controller.
18. Press **SEL**
19. Cursor is indicated as a line under character to be changed. Change values with up and down keys.
20. Press **SAVE** when complete.
21. Press **MORE** repeatedly until **SET USER SETUP** then press **BACK** then **ESC** to the **S1 OK** screen.

Katolight Service - Master Repair Manual - Page 4426

CDT One Event Timer Exerciser *(cont'd)*

How to Initiate CDT Exerciser and to start an exercise cycle every 1, 7, 14, or 28 days

From S1 screen

1) Press **TEST**
2) Press **MORE**
3) Press **START TEST TIMER** (to initiate Test).

- If the CDT Exerciser is Factory configured for a Load Exerciser, the Controller will immediately start a load exercise. The controller will start the generator, transfer the load to Source 2 and remain in Source 2 for the duration set for **EXER S2 RUN TIME** in the **SET** menu. The controller will retransfer the load back to Source 1 after the S1 stable timer has timed out and run the generator unloaded for the duration of the S2 stop delay timer (Engine Cool Down Timer).
- If the CDT Exerciser is Factory configured for a No-Load Exerciser, the Controller will immediately start a No-load exercise. The controller will start the generator and run it unloaded for the duration of the S2 stop delay timer (Engine Cool Down Timer).

Exercise will be repeated at the same time as initiated on every 1, 7, 14, or 28 days according to the selection made in the Configure **CFG** menu.

How to Bypass (Cancel) an exercise during an exercise cycle

1) Press **BPASS**
2) Allow the controller to complete the Engine cool down cycle

If the CDT Exerciser is Factory configured for a No-Load Exerciser Or allow the controller to complete retransfer to Source 1 If the CDT Exerciser is Factory configured for a Load Exerciser

How to Bypass the next exercise event and Keep the rest of scheduled events unchanged

1) Press Test
2) Press **MORE**
3) Press **BYPASS EXER**

To re-institute the next exercise event back, press **CANCL BPASS**

How to initiate a new exercise start time

1) Press **TEST**
2) Press **MORE**
3) Press **EXER CANCL**
4) Press **START TIMER TEST**

How to check the next exercise event

1) From **S1 OK** screen, press **MORE** three times.
2) The unit will display the **PLANT EXERCISER NEXT** event in **DAYS**, **HOURS**, and **MINUTES**
3) Press **ESC** to **S1 OK** Screen.

Notes:

- ***E*** appears in the upper right hand corner of LCD screen when exercise is impending.
- For Load Exerciser, actual exercise period (ATS in S2 position)= CDT (Exerciser) timing period +T (S1 stable Timer) timing period.

Katolight Service - Master Repair Manual - Page 4427

CDP Clock Exerciser

Load / No-Load Clock Exerciser

Allows the Generator to start and run unloaded or to simulate a power failure, start Generator and run under load. Can be configured by the end user for 1, 7, 14, 28, or 365 day cycles.

- A total of 7 independent No Load exercise periods (up to 10 hours each) can be programmed for each of the daily, weekly, 14-day, and 28-day exercisers.
- A total of 12 independent No Load exercise periods (up to 10 hours) can be programmed for the 365-day Exerciser.

How to Configure (CFG) the Exerciser

1. Beginning from the **S1 OK** screen, press **MORE** then **CFG**.
2. Press **MORE** to scroll to **CONFIG CLOCK EXERCISER** screen.
3. The third line of the **CONFG CLOCK EXERCISER** will show either **DAILY**, **WEEKLY**, **14 DAY**, **28 DAY**, **365 DAY** or **OFF**.
4. If the third line of the **CONFG CLOCK EXERCISER** shows **DAILY**, **WEEKLY**, **14 DAY**, **28 DAY**, or **365 DAY** as desired, press **MORE** repeatedly to **BACK**. Press **ESC** then proceed to the **SET** menu to set the **EXERCISER**.
5. If the third line of the **CONFG CLOCK EXERCISER** shows **OFF**, continue.
6. Press **SEL**.
7. Enter **ACCESS** code located on white label on the back of the controller.
8. Press **UP** or **DOWN** to select **DAILY**, **WEEKLY**, **14 DAY**, **28 DAY**, or **365 DAY** as desired.
9. Press **SAVE**.
10. Press **MORE** repeatedly to **BACK** then **ESC** to **S1 OK** screen.

How to set (SET) the DAILY Exerciser

1. Beginning from the **S1 OK** screen, press **MORE** then **SET**.
2. Press **MORE** repeatedly until **SET EXERCISER** screen.
3. Press **SEL**.
4. Enter **ACCESS** code located on white label on the back of the controller.
5. Press **SEL**
6. Cursor is indicated as a line under character to be changed. Change values with up and down keys. Press **SAVE** after each entry to save value and to move to the next value to be changed.
7. Press **BACK** when complete.
8. Press **MORE** repeatedly until **SET USER SETUP**. Press **BACK** then **ESC** to the **S1 OK** screen.

How to Bypass (Cancel) an exercise during an exercise cycle

1) Press **BPASS**
2) Allow the controller to complete the Engine cool down cycle.

If the CD Exerciser is configured or Set for a No-Load Exercise. Or allow the controller to complete retransfer to Source 1. If the CD Exerciser is configured for a Load Exerciser

How to Bypass the next exercise event and Keep the rest of scheduled events unchanged

1) Press **TEST**
2) Press **MORE**
3) Press **BYPASS EXER**

To re-institute the next exercise event back, press **CANCL BPASS**

How to check the next exercise event

1) From **S1 OK** screen, press **MORE** three times.
2) The unit will display the **PLANT EXERCISER NEXT** event in **DAYS**, **HOURS**, and **MINUTES**
3) Press **ESC** to **S1 OK** Screen.

Notes:

- In the **S1 OK** screen, an (***E***) appears in the upper right hand corner of LCD screen when exercise is impending.
- For Load Exerciser, actual exercise period (ATS in S2 position)= **CDT** (Exerciser) timing period +T (S1 Stable Timer) timing period.
- A value greater than zero must be entered in the Exerciser duration field to be accepted as a valid exercise period.
- The Exercise cycle will be repeated on a regular basis as programmed and initiated in the **SET** menu depending on what Exerciser was configured (selected) in the **CFG** menu.

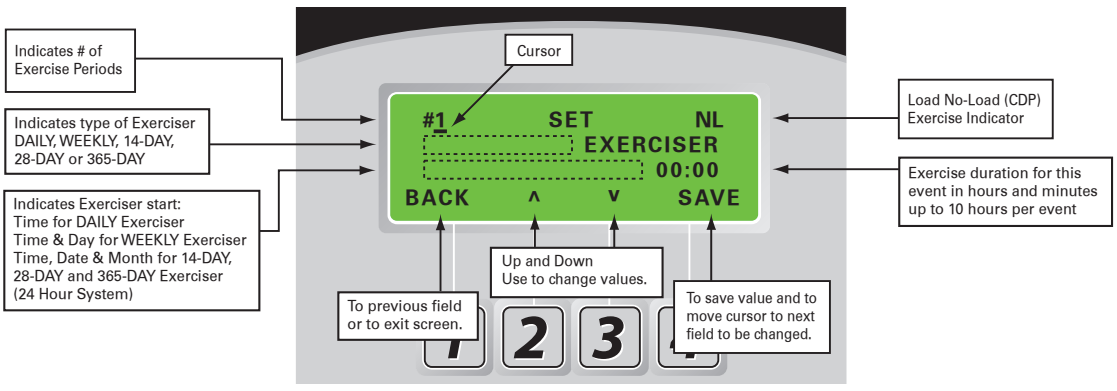

Katolight Service - Master Repair Manual - Page 4428

MX150 User Setup - CFG Menu

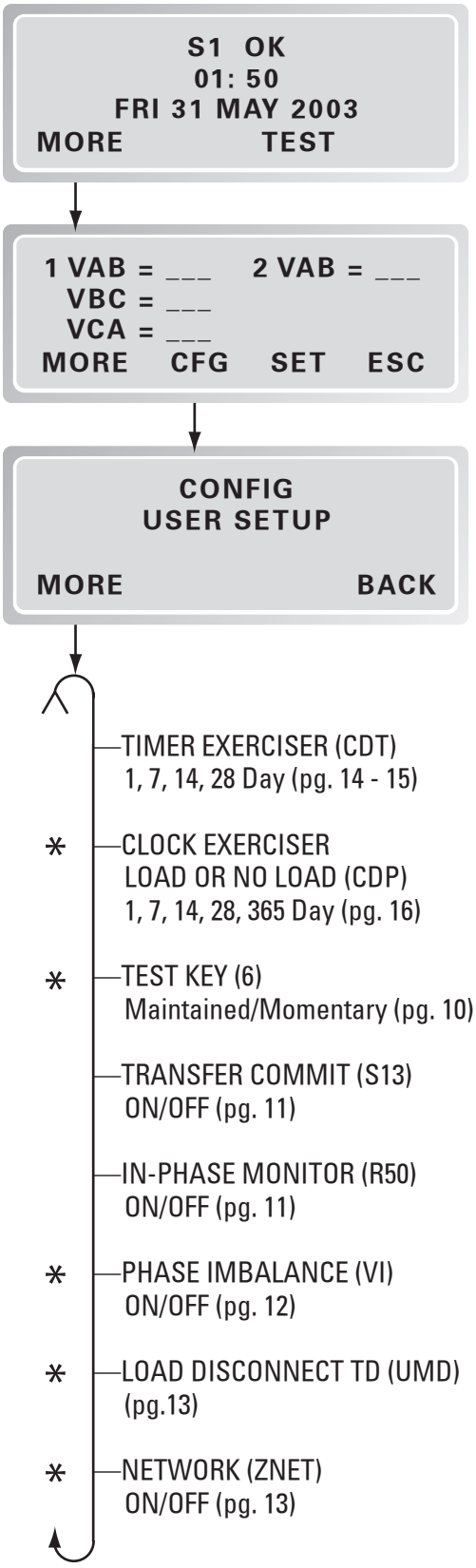

* Optional Accessories

Turn options ON or OFF via keypad through the CFG menu

Enter six digit access code
(The factory assigned six-digit access code is located on the back of the controller)

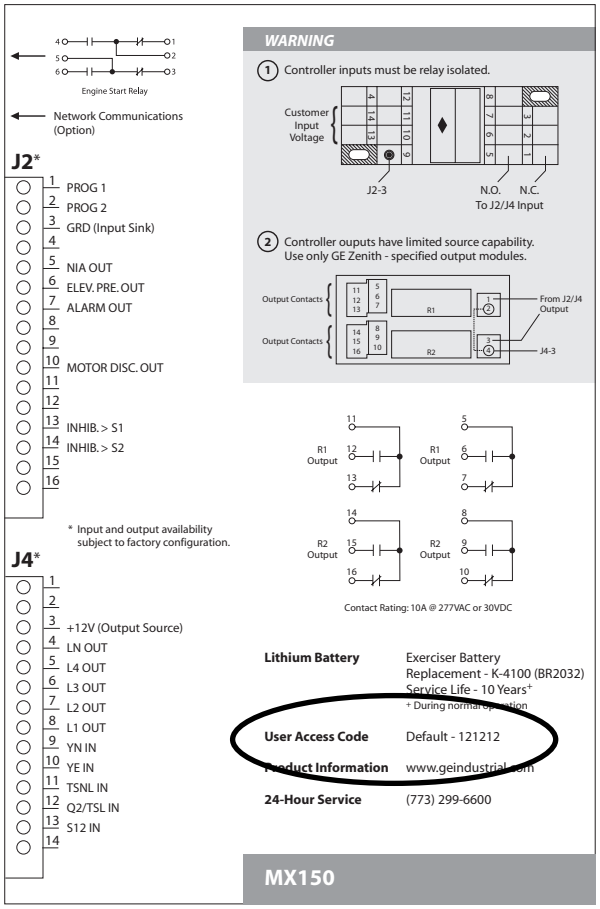

Figure 9

Katolight Service - Master Repair Manual - Page 4429

MX150 User Setup - SET Menu

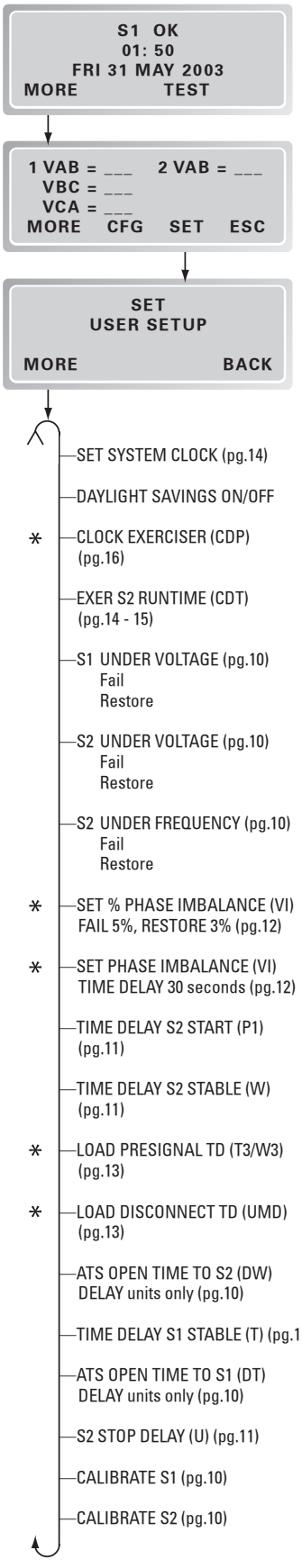

* Optional Accessories

Change adjustable values through the SET menu.

Enter six digit access code
(The factory assigned six-digit access code is located on the back of the controller)

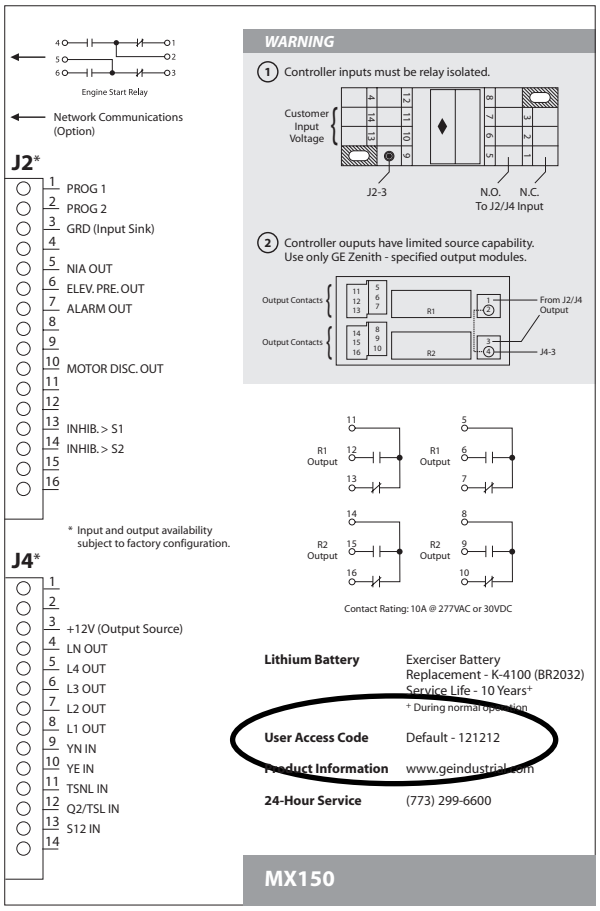

Figure 9

Katolight Service - Master Repair Manual - Page 4430

MX150 User Setup - System Info

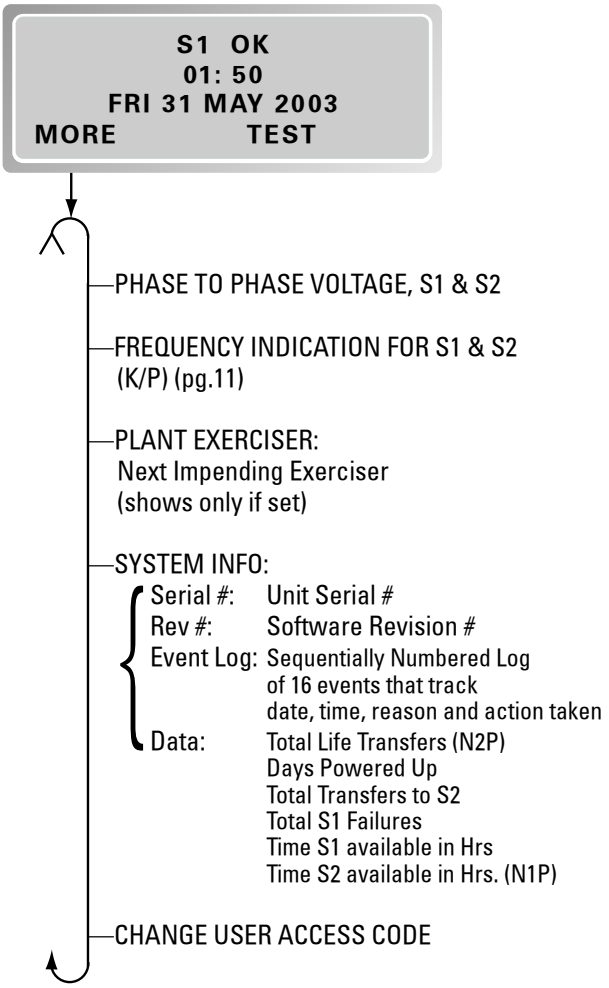

View System Data

Enter six digit access code
(The factory assigned six-digit access code
is located on the back of the controller)

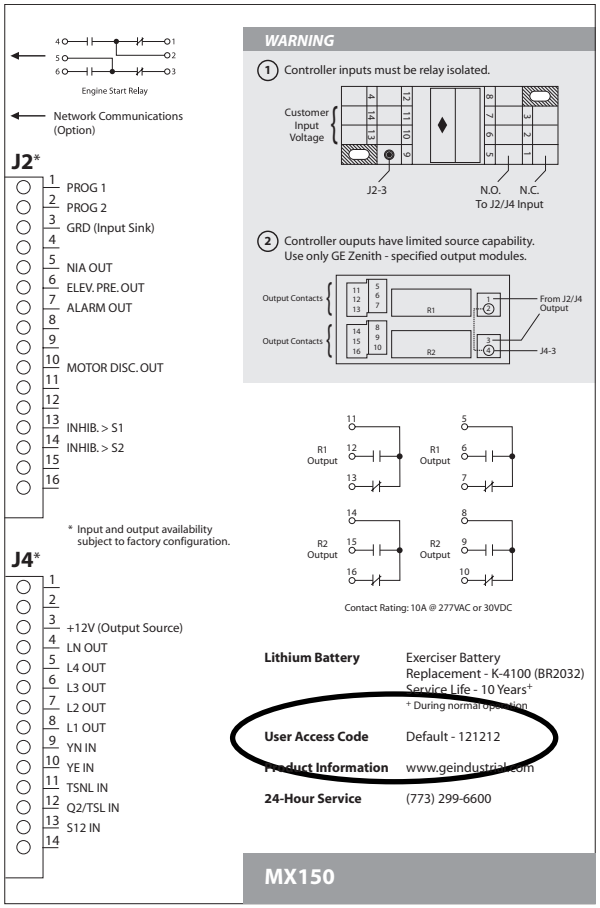

Figure 9

Katolight Service - Master Repair Manual - Page 4431

Testing

⚠ NOTICE ⚠

A periodic test of the transfer switch under load conditions is recommended to insure proper operation. (See National Electric Code articles 700 and 701)

ATS Testing

Start generator and verify proper voltage, frequency and phase sequence (match to Source 1). Shut down gen set and place in Auto. Complete the visual inspection of the transfer switch, and close the cabinet door.

Initiate the test by pressing the TEST button on the LCD keypad. The controller will then prompt for your access code. After entering the code, three test options will appear—XFR LOAD, FAST TEST and NO XFR (See Figure 10).

- **XFR LOAD** test starts the generator and using the current timer settings, transfers the load to Source 2.
- **FAST TEST** test presets timer values to a maximum 30 seconds during the test. After completion of the test, all timers are reset to their original values. (T3, W3, DT and DW remain)
- **NO XFR** test starts the generator but does not transfer the load to the Source 2.

Press and hold the desired test option button until the switch transfers to Source 2 (load test) or until the generator has been run for the desired amount of time (no load test). Releasing the test button before W timer timeout will abort the test (Exception: when the transfer commit option, is configured “ON”).

To test lamps, press TEST then scroll through MORE, then press LAMP TEST. To cancel LAMP TEST press MORE.

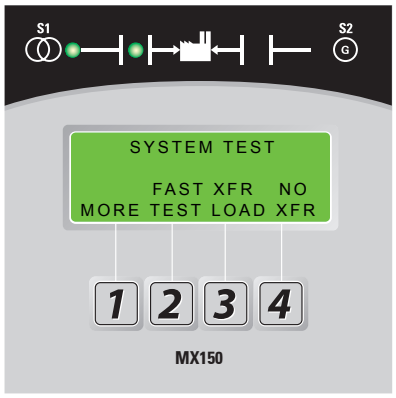

Figure 10

Standard Transition

When the test is initiated, the controller initiates the Time Delay Source 2 Start Timer (Engine Start Timer "P") cycle. A manual CANCEL button is provided to cancel the test if desired. Upon completion of the (P) time delay, an Engine start Signal is sent to Source 2. When Source 2 voltage and frequency reach the preset "Restore" Values, the time delay to Source 2 Timer (W) begins its timing cycle to ensure voltage and frequency stabilization before transfer. A manual pushbutton BYPASS is provided to bypass the "W" time delay if desired. After the (W) time delay, the CCE relay energizes the CE solenoid to close the transfer switch in to Source 2. The SE limit switch activates to de-energize the CCE relay.

Restoration of Source 1 Power:

Deactivating the test switch initiates re-transfer to Source 1 sequence.The delay to Source 1 Timer (T) begins its timing cycle to ensure voltage and frequency stabilization before retransfer. A manual pushbutton BYPASS is provided to bypass the "T" time delay if desired. After the (T) time delay, the CCN relay energizes the CN solenoid to retransfer the switch to Source 1. The SN limit switch activates to de-energize the CCN relay.

Immediately after re-transfer, the S2 Stop Delay Timer (Delay to Engine Stop "U") begins its cycle to allow Source 2 Engine to run unloaded. A manual pushbutton BYPASS is provided to bypass the "U" time delay if desired. Upon completion of the (U) timing cycle, the controller sends an Engine stop signal.

Delayed Transition

Source 1 Power Failure:

When the test is initiated, the controller initiates the Time Delay Source 2 Start (Engine Start Timer "P") cycle. A manual CANCEL button is provided to cancel the test if desired Upon completion of the (P) time delay, an Engine start Signal is sent to Source 2. When Source 2 voltage and frequency reach the preset "Restore" values, the time delay to open Source 1 timer (W) begins its timing cycle to ensure voltage and frequency stabilization before re-transfer. A manual pushbutton BYPASS is provided to bypass the "W" time delay if desired. After the (W) time delay, the CCNO relay energizes the CNO solenoid to open the transfer switch out of Source 1 position. The time delay to Source 2 timer (DW) begins its timing cycle. After the (DW) time delay, the CCE relay energizes. The switch then completes transfer to Source 2 by energizing the CE solenoid. The SE limit switch activates to de-energize the CCE relay.

Restoration of Source 1 Power:

Deactivating the test switch initiates re-transfer to Source 1sequence.The delay to open Source 2 Timer (T) begins its timing cycle to ensure voltage and frequency stabilization before retransfer. A manual pushbutton BYPASS is provided to bypass the "T" time delay if desired. After the (T) time delay, the CCEO relay energizes the CEO solenoid to open the switch out of Source 2 position. The time delay to Source 1 timer (DT) begins its timing cycle. After the (DT) time delay, the CCN relay energizes the CN solenoid to complete re-transfer of the switch to Source 1. The SN limit switch activates to de-energize the CCN relay.

Immediately after re-transfer, the S2 Stop Delay Timer (Delay to Engine Stop "U") begins its cycle to allow Source 2 Engine to run unloaded. A manual pushbutton BYPASS is provided to bypass the "U" time delay if desired. Upon completion of the (U) timing cycle, the controller sends an Engine stop signal.

Katolight Service - Master Repair Manual - Page 4432

Sequence of Operation

Standard Transition

Source 1 Power Failure:
When Source 1 voltage or frequency has fallen below the preset "Fail" values, the controller initiates the Time Delay Source 2 Start Timer (Engine Start Timer "P") cycle. Upon completion of the (P) time delay, an Engine start Signal is sent to Source 2. When Source 2 voltage and frequency reach the preset "Restore" Values, the time delay to Source 2 Timer (W) begins its timing cycle to ensure voltage and frequency stabilization before transfer. A manual pushbutton BYPASS is provided to bypass the "W" time delay if desired. After the (W) time delay, the CCE relay energizes the CE solenoid to close the transfer switch in to Source 2. The SE limit switch activates to de-energize the CCE relay.

Restoration of Source 1 Power:
When Source 1 power reach the preset "Restore" values, the controller initiates re-transfer to Source 1sequence.The delay to Source 1 Timer (T) begins its timing cycle to ensure voltage and frequency stabilization before retransfer. A manual pushbutton BYPASS is provided to bypass the "T" time delay if desired. After the (T) time delay, the CCN relay energizes the CN solenoid to retransfer the switch to Source 1. The SN limit switch activates to de-energize the CCN relay.

Immediately after re-transfer, the S2 Stop Delay Timer (Delay to Engine Stop "U") begins its cycle to allow Source 2 Engine to run unloaded. A manual pushbutton BYPASS is provided to bypass the "U" time delay if desired. Upon completion of the (U) timing cycle, the controller sends an Engine stop signal.

Delayed Transition

Source 1 Power Failure:
When Source 1 voltage or frequency has fallen below the preset "Fail" values, the controller initiates the Time Delay Source 2 Start (Engine Start Timer "P") cycle. Upon completion of the (P) time delay, an Engine start Signal is sent to Source 2. When Source 2 voltage and frequency reach the preset "Restore" values, the time delay to open Source 1 timer (W) begins its timing cycle to ensure voltage and frequency stabilization before re-transfer. A manual pushbutton BYPASS is provided to bypass the "W" time delay if desired. After the (W) time delay, the CCNO relay energizes the CNO solenoid to open the transfer switch out of Source 1 position. The time delay to Source 2 timer (DW) begins its timing cycle. After the (DW) time delay, the CCE relay energizes. The switch then completes transfer to Source 2 by energizing the CE solenoid. The SE limit switch activates to de-energize the CCE relay.

Restoration of Source 1 Power:
When Source 1 power reach the preset "Restore" values, the controller initiates re-transfer to Source 1 sequence.The delay to open Source 2 Timer (T) begins its timing cycle to ensure voltage and frequency stabilization before retransfer. A manual pushbutton BYPASS is provided to bypass the "T" time delay if desired. After the (T) time delay, the CCEO relay energizes the CEO solenoid to open the switch out of Source 2 position. The time delay to Source 1 timer (DT) begins its timing cycle. After the (DT) time delay, the CCN relay energizes the CN solenoid to complete re-transfer of the switch to Source 1. The SN limit switch activates to de-energize the CCN relay.

Immediately after re-transfer, the S2 Stop Delay Timer (Delay to Engine Stop "U") begins its cycle to allow Source 2 Engine to run unloaded. A manual pushbutton BYPASS is provided to bypass the "U" time delay if desired. Upon completion of the (U) timing cycle, the controller sends an Engine stop signal.

Table 3

Timer Designations as they appear in the SET menu						
ATS Type	**P**	**W**	**DW**	**T**	**DT**	**U**
Standard	Time Delay S2 Start	Time Delay S2 Stable	→	Time Delay S1 Stable	→	S2 Stop Delay
Delay	Time Delay S2 Start	Time Delay S2 Stable	ATS Open Time to S2	Time Delay S1 Stable	ATS Open Time to S1	S2 Stop Delay
Source 1 Fails	Transfer to Source 2 →			Source 1 Returns ↓	Transfer to Source 1 →	Engine Cooldown

Katolight Service - Master Repair Manual - Page 4433

Relay/Transformer (R/T Box)

Standard Transition

Each MX150 microprocessor based ATS controller requires a relay/transformer box to apply line voltage to the ATS operator via coil control relays. Also required is power for the MX150 printed circuit board and an application of sensing voltage proportional to line voltage. This is accomplished by the relay transformer box. This method of switching operator voltage and applying power and sensing voltage to the printed circuit board isolates the MX150 from the line voltage, further protecting the controller from harmful line transients. Two versions of the R/T box exist depending on the type of ATS (standard transition or delayed transition).

The following layout drawings of the R/T Box components (standard and delayed transition) include a bill of materials for replacement parts. Schematics are included to indicate proper wiring.

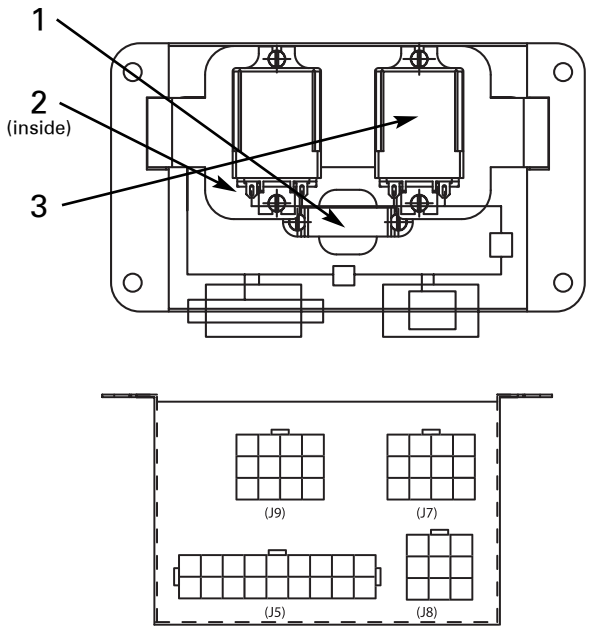

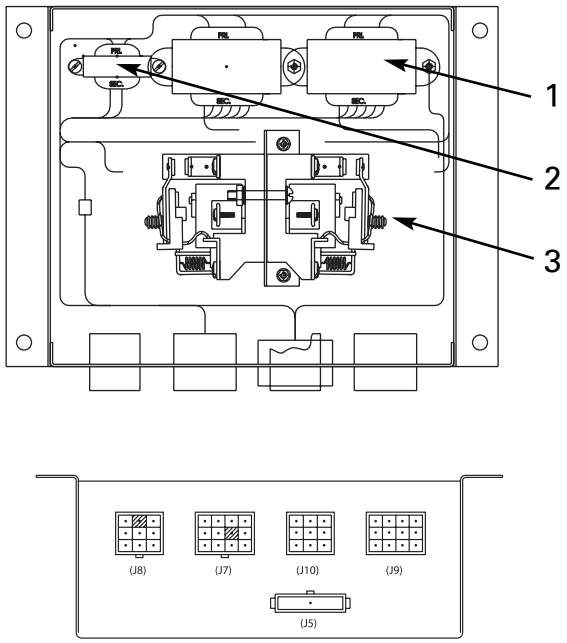

40-225 Amp Molded Power Section Transformer Usage *(see Figure 10)*

R/T Box Assembly Part No.	Primary Voltage at 50/60 Hz	1 VA XFMR Part No.	25 VA XFMR Part No.
57P-1115	120V	K-3216	K-3224
57P-1116	208-220V	K-3217	K-3225
57P-1117	230-240V	K-3218	K-3226
57P-1118	277V	K-3219	K-3227
57P-1119	380-400V	K-3220	K-3228
57P-1120	416-440V	K-3221	K-3229
57P-1121	460-480V	K-3222	K-3230
57P-1122	575-600V	K-3223	K-3231

40-3000 Amp - All Other Standard Types Transformer Usage *(see Figure 11)*

R/T Box Assembly Part No.	Primary Voltage at 50/60 Hz	1 VA XFMR Part No.	25 VA XFMR Part No.
50P-1005	120V	K-3216	K-3224
50P-1006	208-220V	K-3217	K-3225
50P-1007	230-240V	K-3218	K-3226
50P-1008	277V	K-3219	K-3227
50P-1009	380-400V	K-3220	K-3228
50P-1010	416-440V	K-3221	K-3229
50P-1011	460-480V	K-3222	K-3230
50P-1012	575-600V	K-3223	K-3231

Bill of Material

Item	Part No.	Description	Qty
1	See Chart	Transformer (1 VA)	1
2	See Chart	Transformer (25 VA)	2
3	K-1274	Relay Flange Mounted	2

Bill of Material

Item	Part No.	Description	Qty
1	See Chart	Transformer (25 VA)	2
2	See Chart	Transformer (1 VA)	1
3	K-1260	Coil Control Relay (24V)	2

Katolight Service - Master Repair Manual - Page 4434

Relay/Transformer (R/T Box) *(cont'd)*

Delayed Transition

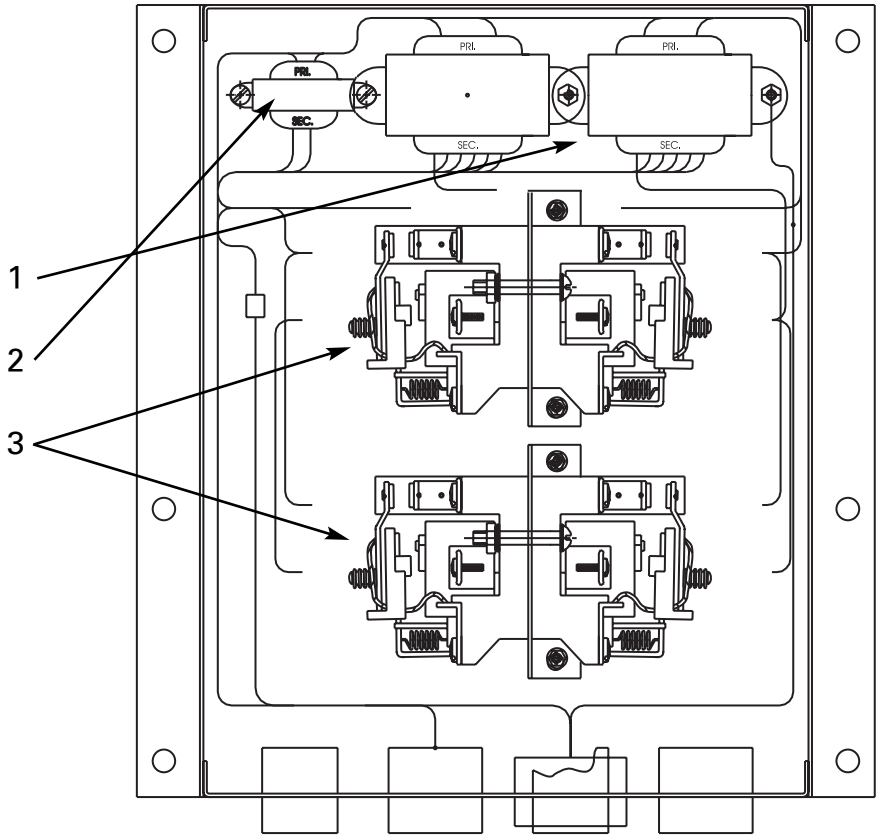

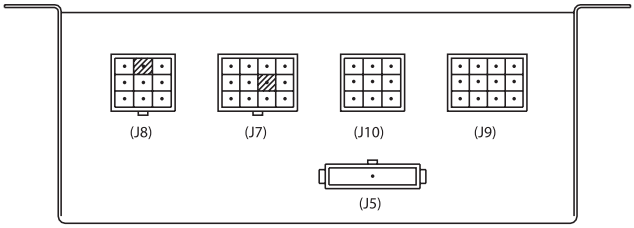

Transformer Usage

R/T Box Assembly Part No.	Primary Voltage at 50/60 Hz	1 VA XFMR Part No.	25 VA XFMR Part No.
50P-1013	120V	K-3216	K-3224
50P-1014	208-220V	K-3217	K-3225
50P-1015	230-240V	K-3218	K-3226
50P-1016	277V	K-3219	K-3227
50P-1017	380-400V	K-3220	K-3228
50P-1018	416-440V	K-3221	K-3229
50P-1019	460-480V	K-3222	K-3230
50P-1020	575-600V	K-3223	K-3231

Bill of Material

Item	Part No.	Description	Qty
1	See Chart	Transformer (25 VA)	2
2	See Chart	Transformer (1 VA)	1
3	K-1260	Coil Control Relay (24V)	4

Katolight Service - Master Repair Manual - Page 4435

Standard Transition R/T Box Schematic

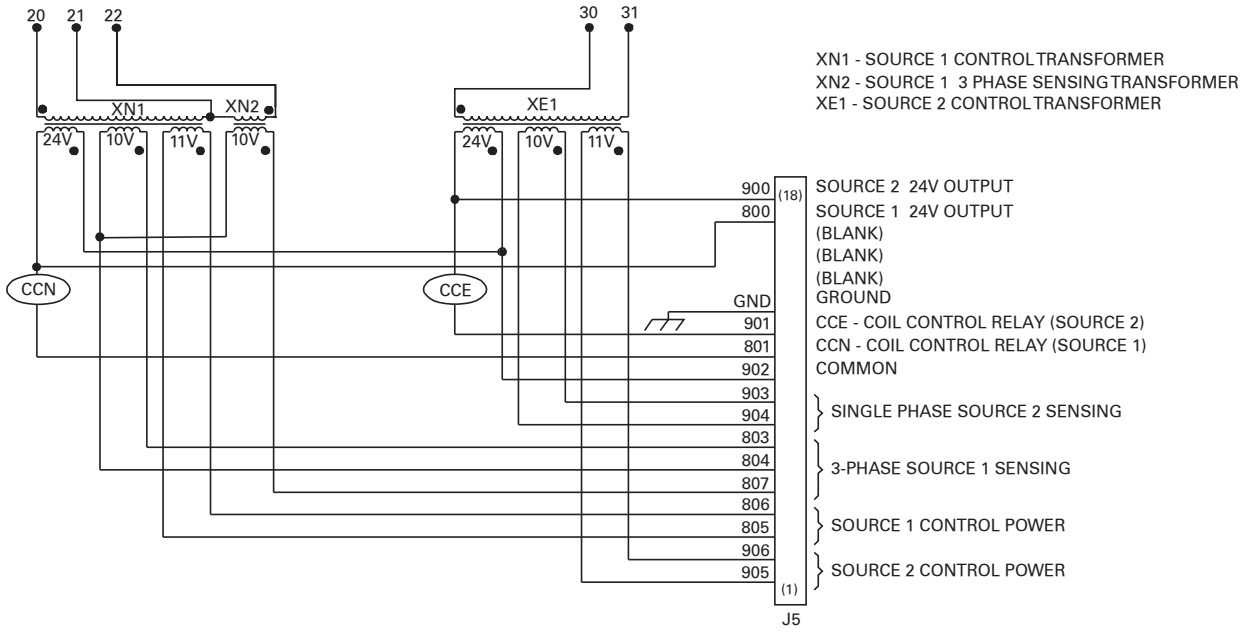

Delayed Transition R/T Box Schematic

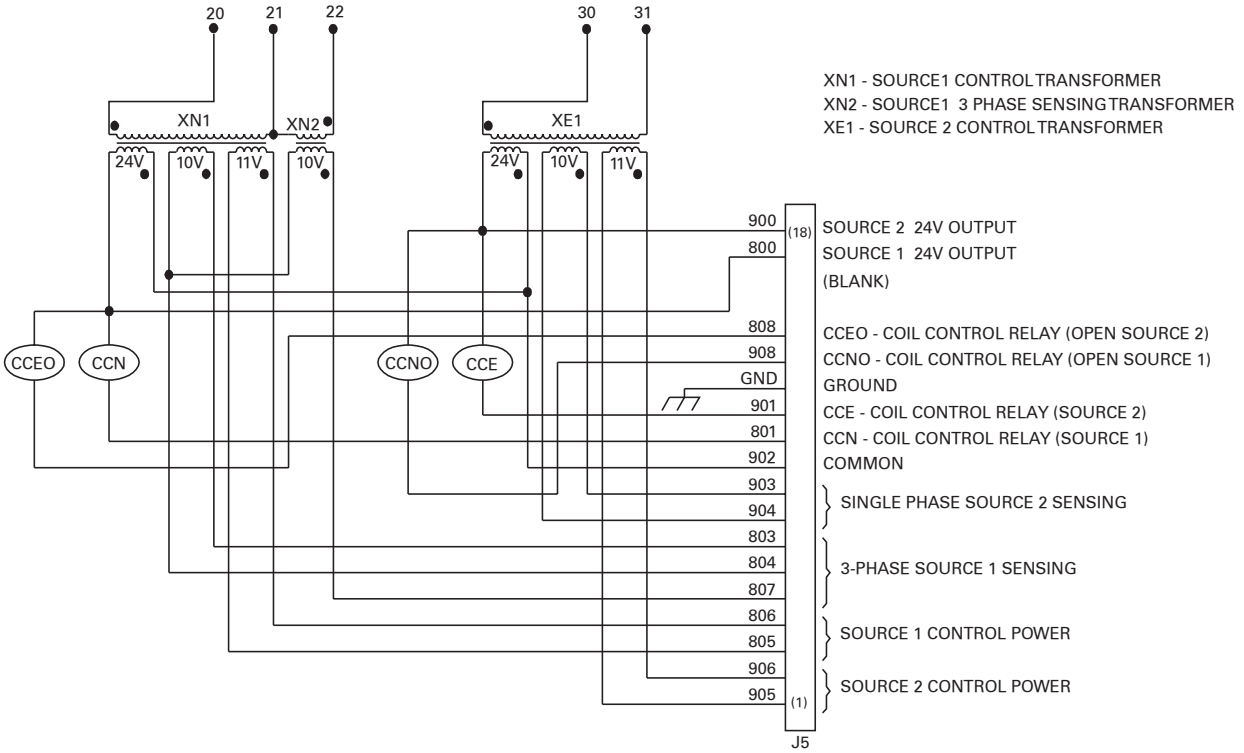

Katolight Service - Master Repair Manual - Page 4436

Troubleshooting and Diagnostics

⚠ DANGER ⚠

HAZARDOUS VOLTAGES CAN CAUSE SEVERE INJURY OR DEATH.
These charts may indicate problems that require authorized GE Zenith service personnel.
Hazardous voltages may exist on termination plugs other than those that go into the MX150.

General Troubleshooting

The following troubleshooting guide is used to recognize, and determine basic faults. When using this guide, it will ask several questions about the condition of the switch. This guide will then list an order of the possible faults. You will then look at the first suspected fault to determine if it is the problem. If it is not a fault, you go to the second suspected fault. If you go through all of the suspected faults, or the chart instructs you to, call a GE Zenith Representative for further assistance.

NOTE: When you use the troubleshooting charts, the Annunciation column refers to the LED's on the control panel.

Symptom	Annunciation	Possible Cause(s)	Corrective Action
Engine does not START	SOURCE 2 AVAILABLE LED off	Engine start wires not terminated properly	Check engine start connections
		Generator is in OFF position	Investigate why Engine Control Switch was turned off
Engine does not stop	LCD Display - "TD Engine Cool Down"	U timing cycle not complete	Check U timer setting
	SOURCE 1 POSITION, and SOURCE 1 and SOURCE 2 AVAILABLE LEDs on, but U timer has timed out	Engine start wires not terminated correctly	Check Engine Start Connections
		Generator in MANUAL	Place generator in AUTO
ATS will not transfer to SOURCE 2 ZTG Series	SOURCE 2 AVAILABLE LED off	SOURCE 2 voltage or frequency not within acceptable parameters	Check: Engine Start Connections, Generator Breaker, Generator Output, and Engine Control Switch
	None	Power supply connector unplugged	Plug in connector
	LCD Display - "S1 _ _ _ _ TD XFR S1>S2 Time Remaining _ _ _ _"	**W** timing cycle not complete	Check **W** Timer setting
ATS will not transfer to SOURCE 1 ZTGD Series	LCD Display - "ATS Open Time Remaining _ _ _ _"	**DW** timing cycle not complete	Check **DW** Timer setting
	SOURCE 1 AVAILABLE LED off	SOURCE 1 voltage or frequency not within acceptable parameters	Check utility and utility breakers
	None	Power supply connector unplugged	Plug in connector
	LCD Display - "Diagnostic Code 001"	Limit switch or RT box connector unplugged	Call Technical Services
	LCD Display - "S1 OK Time Remaining _ _ _ _ Bypass"	**T** timing cycle not complete	Check **T** Timer setting
	LCD Display - "ATS Open Time Remaining _ _ _ _"	**TD** timing cycle not complete	Check **DT** Timer setting

Katolight Service - Master Repair Manual - Page 4437

Maintenance and Testing

⚠ CAUTION ⚠

Due to hazardous voltage and current, GE Zenith recommends that a GE Zenith Certified technician or a qualified electrician must perform the installation and maintenance of the switch.

⚠ WARNING ⚠

Both power sources must be disconnected before manual operation of the switch.

A preventive maintenance program will insure high reliability and long life for the transfer switch. The preventive maintenance program for the transfer switch should include the following items:

Inspection and Cleaning

The switch should be inspected for any accumulation of dust, dirt, or moisture, and should be cleaned by vacuuming or wiping with a dry cloth or soft brush. do not use a blower since debris may become lodged in the electrical and mechanical components and cause damage.

Remove the transfer switch barriers and check the condition of the contacts. Any surface deposits must be removed with a clean cloth (do not use emery cloth or a file). If the contacts are pitted or worn excessively, they should be replaced. A general inspection of mechanical integrity should be made to include loose, broken or badly worn parts.

Servicing

All worn or inoperative parts must be replaced using GE Zenith recommended replacement parts. Please refer to the Replacement Parts manual for specific part information and ordering procedures. Please contact the GE Zenith Technical Services Department for the Replacement Parts manual.

The operating mechanism of the transfer switch is lubricated with Lubriplate 105. The lubricant applied at the factory provides adequate lubrication for the lifetime of the switch. Should debris contaminate the mechanism, clean and apply additional Lubriplate.

GE Zenith can provide complete preventative maintenance services. Please contact the GE Zenith Technical Services Department for additional information.

CDT battery replacement - lithium batteries may last up to 10 years, however it is recommended that battery replacement be included in a 3-5 year service cycle. The battery maintains the exerceser memory only and does not otherwise affect the operation.

Testing

A manual operator handle is provided with the transfer switch for maintenance purposes only. Manual operation of the switch must be checked before it is operated electrically. **Both power sources must be disconnected before manual operation of the switch.** Insert the handle and operate the transfer switch between the Source 1 and Source 2 positions. The transfer switch should operate smoothly without binding. Return the switch to Source 1 position, remove the handle, and return it to the holder provided.

After completing the inspection, cleaning and servicing of the transfer switch, reinstall the switch cover, and close and lock the cabinet door. Reclose the circuit breakers feeding the utility and generator sources to the switch.

Initiate the electrical transfer test by activating the TS test switch. P timer will time out and the microcontroller will send an engine start signal. When the W time has elapsed, the switch will complete its transfer by closing into Source 2.

Deactivating the test switch will start retransfer to Source 1. The switch will complete its retransfer to Source 1 after the time delay of the T timer. The U engine overrun timer allows the engine generator to run unloaded for a preset cool down period.

NOTE: A periodic test of the transfer switch under load conditions is recommended to insure proper operation. (See National Electric Code articles 700 and 701).

⚠ WARNING ⚠

When performing a hi-pot or dielectric test on the power section, DISCONNECT the control panel plugs from the microprocessor to avoid potential damage.

Katolight Service - Master Repair Manual - Page 4438

Power Panel and Replacement Parts

Standard Transition - 40 to 260 Amps Solenoid Type

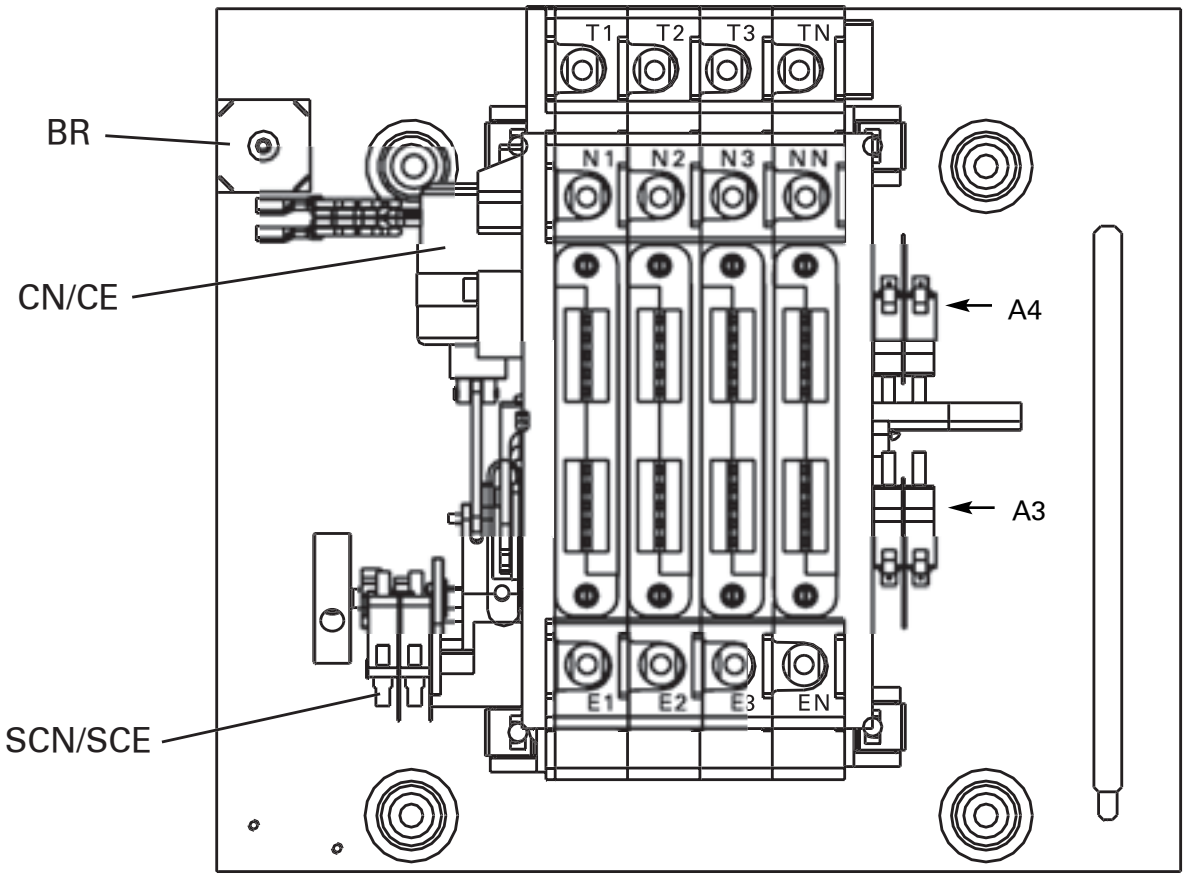

Tag	Description	Recommended as Spares	Voltage 40 to 260 Amps	Part #
CN/CE	Solenoid	*	120V	K-2207
			208V	K-2208
			220V	K-2208
			240V	K-2228
			277V	K-2211
			380/416V	K-2212
			440/480V	K-2209
			575/600V	K-2213
	Solenoid Plunger and Link	*	ALL V	57P-1030
SCN/SCE	Coil Cutout Switch		120-480V	L-3078
SCN/SCE	Coil Cutout Switch		600V	L-4027
BR	Rectifier	*	100-240V	PS-5152
BR	Rectifier	*	241-600V	PS-5076
A3/A4	Auxiliary Contacts		ALL V	L-3078

Katolight Service - Master Repair Manual - Page 4439

Standard Transition - 400 to 600 Amps Molded Type

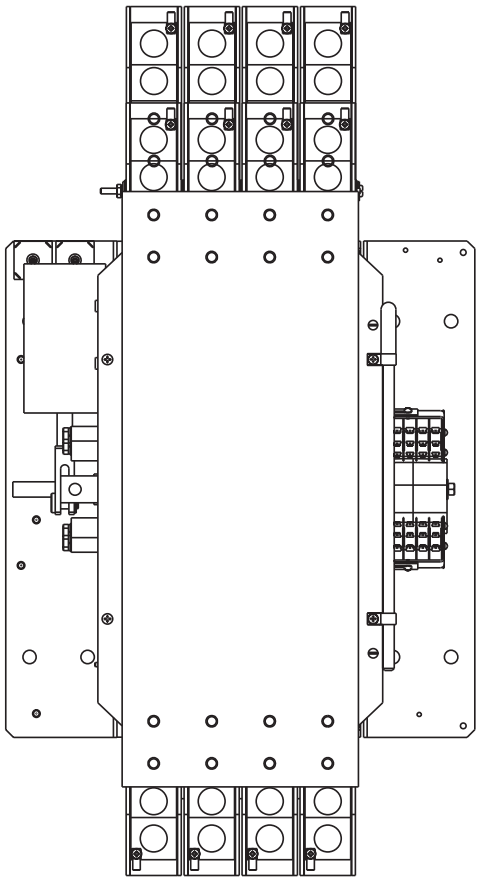

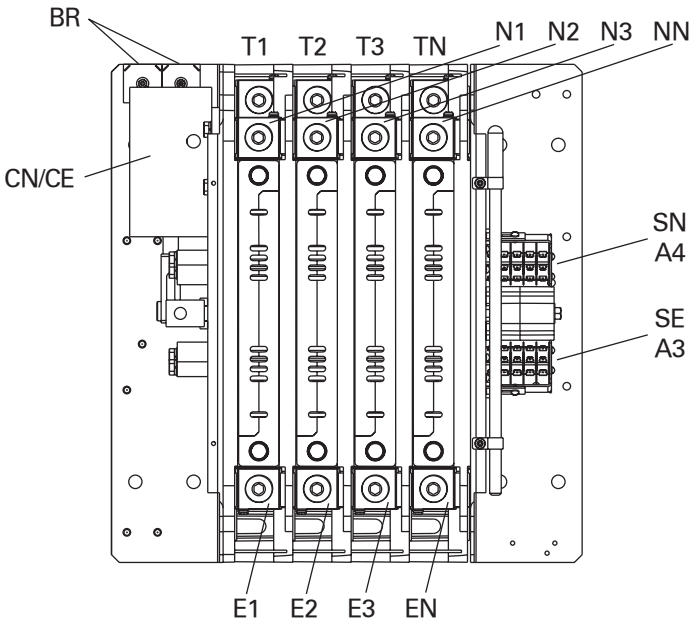

Tag	Description	Recommended as Spares	Stock Numbers by Amperage	
			400	600
N 1,2,3 N E 1,2,3 N T 1,2,3 N	Cable Connection Lug		S-2701	S-1393F
	Wire Size		#4-600 MCM	#2-600 MCM
			Coil Volts	
CN/CE	Solenoid	*	120	K-2245B
			208/220	K-2246B
			380/416	K-2247B
			440/480	K-2248B
			575/600	K-2249B
SN/SE	Coil Cutout Switches		L-3078	
A3/A4	Auxiliary Contacts			
BR	Rectifier	*	PS-5076	

Katolight Service - Master Repair Manual - Page 4440

Standard Transition - 800 to 1200 Amps

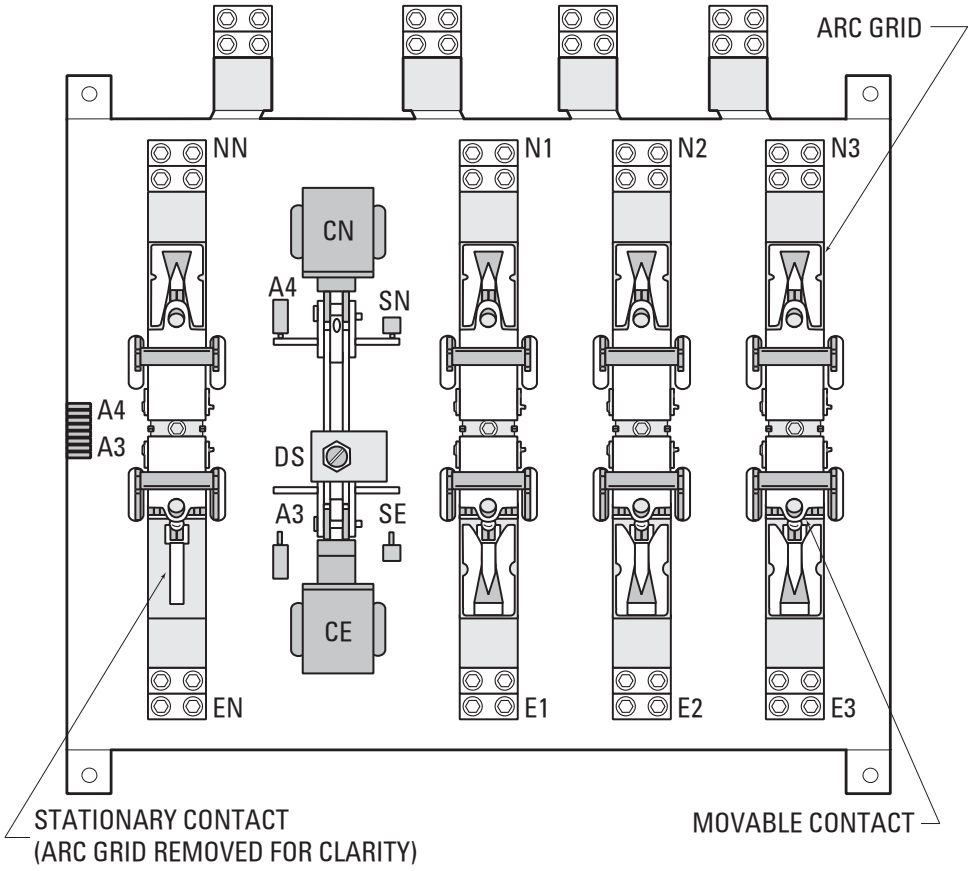

Tag	Description	Coil Volts	Poles	Recommended as Spares	Stock Numbers by Amperage 800	1000	1200
N 1,2,3, N E 1,2,3, N T 1,2,3, N	Cable Connection Lug				S1392F (4)	S1392F (4)	S1392F (4)
	Wire Size				#2-600 MCM	#2-600 MCM	#2-600 MCM
	Stationary Contact Assembly Kit				Consult Factory		
	Arc Grid Assembly Kit				23P-1366		
	Movable Contact Assembly Kit				Consult Factory		
CN/CE	Main Operating Coils	Coil Volts	Poles	*			
		120	2		K-2073F	K-2073F	K-2073F
		240	2		K-2070F	K-2070F	K-2070F
			3		K-2070F	K-2070F	K-2070F
			4		K-2074F	K-2074F	K-2074F
		208	3,4		K-2074F	K-2074F	K-2074F
		575/600	3,4		K-2155	K-2155	K-2155
		480	3		K-2071F	K-2071F	K-2071F
			4		K-2071F	K-2071F	K-2071F
		416	3		K-2071F	K-2071F	K-2071F
SN	CCN Cutout Switch		23P-1333		23P-1333		
SE	CCE Cutout Switch		23P-1327		23P-1452		
A3	Emergency Position Auxiliary Contact		(Qty 1) 23P-1327 (Qty 2) 23P-1328 (Qty 3) 23P-1334 (Qty 4) 23P-1336				
A4	Normal Position Auxiliary Contact		(Qty 1) 23P-1333 (Qty 2) 23P-1334 (Qty 3) 23P-1328 (Qty 4) 23P-1330				
DS	Disconnect Switch (older versions)		Operator L-4009; Contact Block L-1020	*	Operator L-4009; Contact Block L-1020		

Katolight Service - Master Repair Manual - Page 4441

Standard Transition - 1600 to 3000 Amps

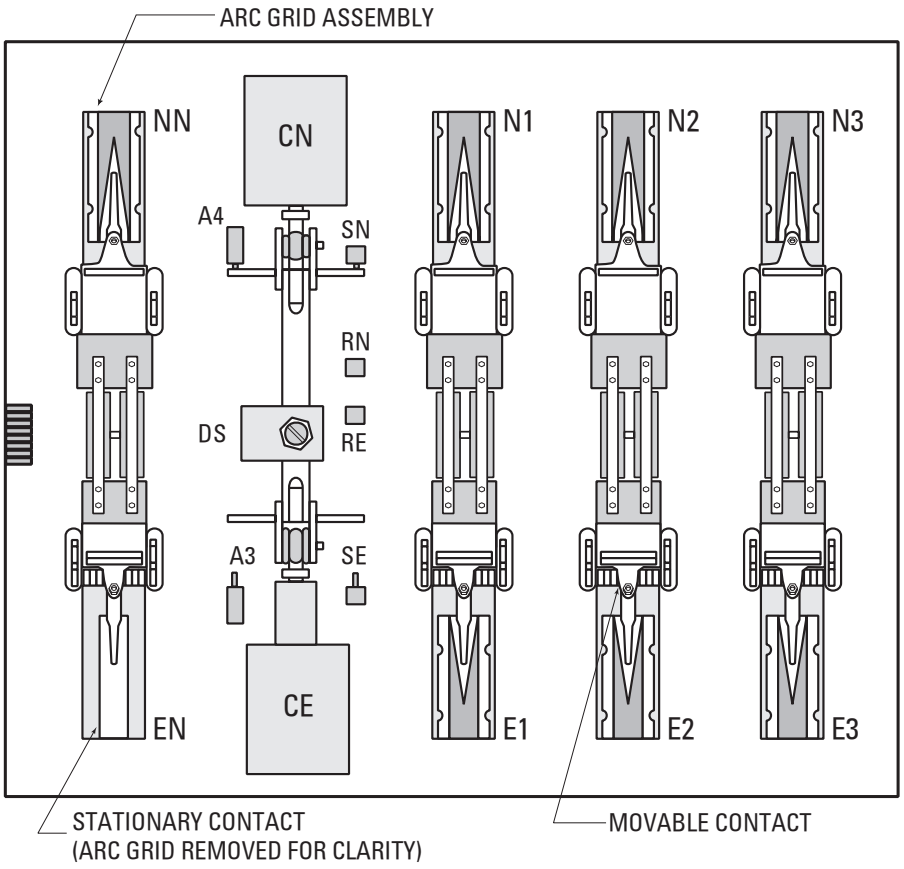

Tag	Description	Coil Volts	Poles	Recommended as Spares	Stock Numbers by Amperage 1600	2000	3000
N 1,2,3, N E 1,2,3, N T 1,2,3, N	Cable Connection Lug				S1126F (2) Optional	S1126F (2) Optional	S1126F (2) Optional
	Wire Size				(8) #2-600 MCM	(8) #2-600 MCM	(8) #2-600 MCM
	Stationary Contact Assembly Kit				23P-1594	23P-1594	23P-1594
	Arc Grid Assembly Kit				23P-1171	23P-1171	23P-1171
	Movable Contact Assembly Kit				23P-1400	23P-1400	23P-1400
CN/CE	Main Operating Coils	Coil Volts	Poles	*			
		120	2		SPO	SPO	SPO
		240	2,3		K-2123F	K-2123F	K-2123F
			4		K-2127F	K-2127F	K-2127F
		208	3		K-2125F	K-2125F	K-2125F
			4		K-2128F	K-2128F	K-2128F
		575/600	3		K-2153F	K-2153F	K-2153F
			4		K-2154F	K-2154F	K-2154F
		480	3		K-2120F	K-2120F	K-2120F
			4		K-2130F	K-2130F	K-2130F
		416	3		K-2126F	K-2126F	K-2126F
SN	CCN Cutout Switch		23P-1352		23P-1352		
SE	CCE Cutout Switch		23P-1356		23P-1356		
A3	Emergency Position Auxiliary Contact		(Qty 1) 23P-1356 (Qty 2) 23P-1357 (Qty 3) 23P-1353 (Qty 4) 23P-1355				
A4	Normal Position Auxiliary Contact		(Qty 1) 23P-1352 (Qty 2) 23P-1353 (Qty 3) 23P-1357 (Qty 4) 23P-1359				
DS	Disconnect Switch (older versions)		Operator L-4009; Contact Block L-1020	*	Operator L-4009; Contact Block L-1020		
RN, RE	Rectifier		23P-1473 (Up to 240V); 23P-1582 (Up to 600V)	*	23P-1473 (Up to 240V); 23P-1582 (Up to 600V)		

Katolight Service - Master Repair Manual - Page 4442

Delayed Transition - 40 to 600 Amps

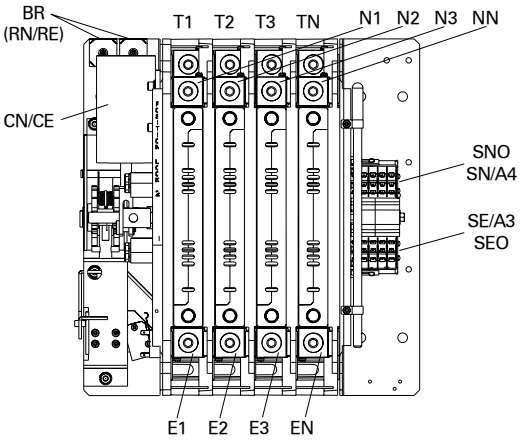

100-400 Amps

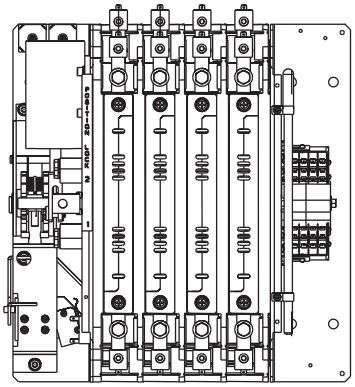

40-80 Amps

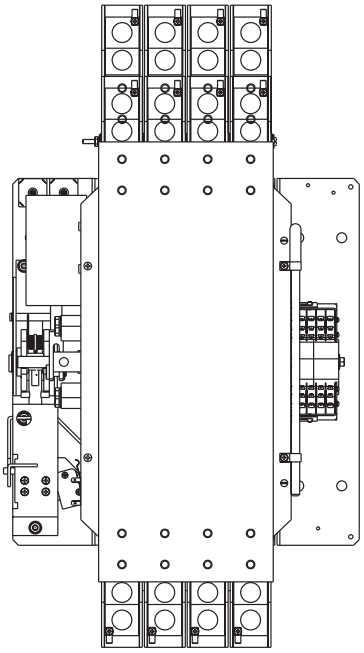

600 Amps

Tag	Description	Recommended as Spares		Stock Numbers by Amperage		
				40-80	100-400	600
N 1,2,3 N E 1,2,3 N T 1,2,3 N	Cable Connection Lug			S-2515	S-2701	S-1393F
	Wire Size			#8-3/0 AWG	#4-600 MCM	#2-600 MCM
			Coil Volts	MAIN	SECONDARY	
CN/CE	Solenoid	*	120	K-2245B	58P-1106	
			208/240	K-2246B	58P-1107	
			380/415	K-2247B	58P-1108	
			440/480	K-2248B	58P-1109	
			575/600	K-2249B	58P-1110	
			575/600	K-2249B	58P-1110	
	Handle-Manual		E-3054			
	Handle-Grip		L-3078			
A3/A4	Auxiliary Contacts		L-3078			
SNO/SEO	Coil Cutout Switch		E-3521			
BR	Rectifier (>380V)	*	PS-5076			
BR	Rectifier	*	PS-5152			

Katolight Service - Master Repair Manual - Page 4443

Delayed Transition - 800 to 1200 Amps

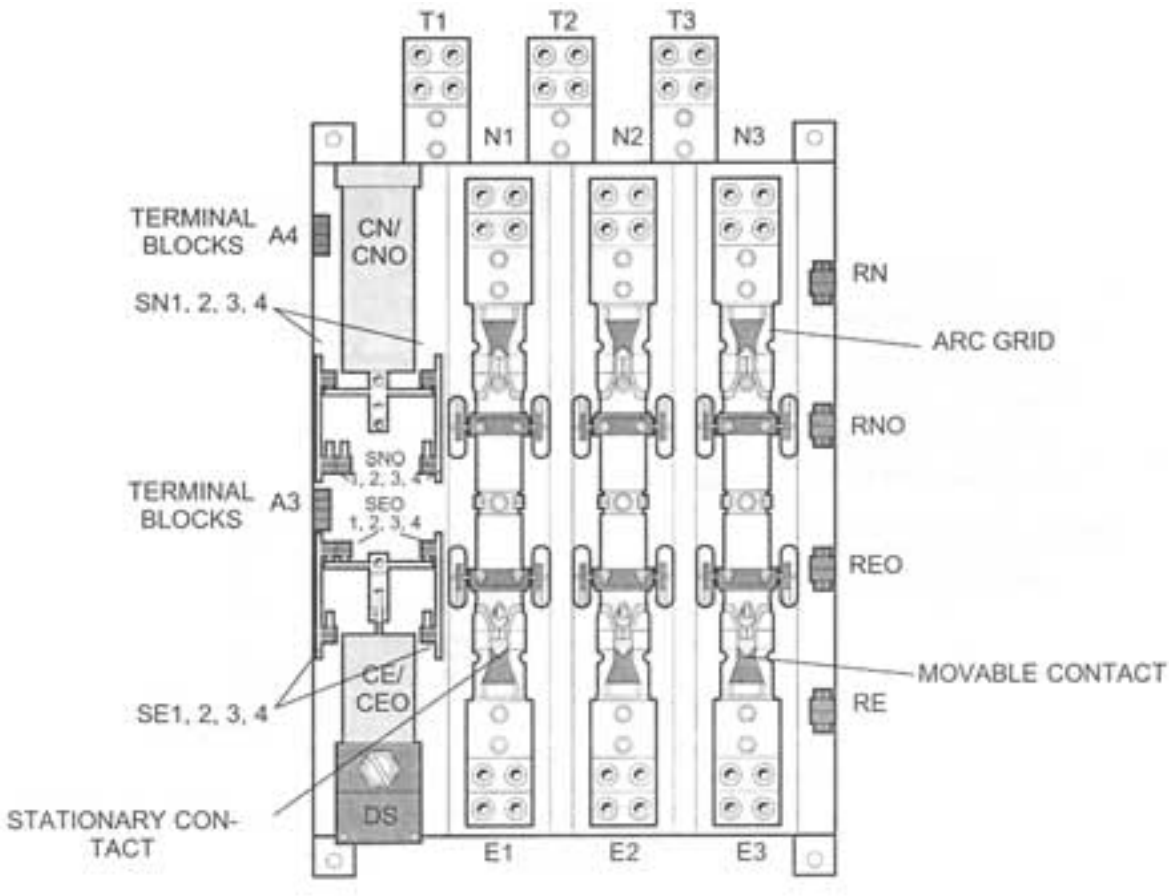

Tag	Description	Recommended as Spares	Stock Numbers by Amperage
			1000-1200
NL 1,2,3 EL 1,2,3 T 1,2,3 NN, EN, TN	Cable Connection Lug, CU Wire		2-1392F (4) 600MCM-2
	Stationary Contact Assembly Kit		26P-1336
	Arc Grid Assembly Kit		23P-1366
	Movable Contact Assembly Kit		26P-1334
	Movable Contact		26P-1335
RN/RNO RE/REO	Coil Rectifier	*	23P-1473 (Up to 240 VAC) 23P-1582 (Up to 600 VAC)
SN/SNO	Limit Switch		23P-1535(L); 23P-1533(R)
SE/SEO	Limit Switch		23P-1536(L); 23P-1534(R)
A3	Emergency Position Auxiliary Contact		23P-1536
A4	Normal Position Auxiliary Contact		23P-1535
DS	Disconnect Switch	*	Operator: L-4009; Contact Block: L-1020
CN/CNO CE/CEO	Main Operator Solenoids	*	**See Chart Below**

Voltage System					Solenoid Part No.
Volts	**Ph**	**Wire**	**Coil VDC**	**Pole**	**800-1200**
240	3	3	240	3	K-2147
120/208	3	4	208	3,4	K-2147
480	3	3	480	3	K-2157
277/480	3	4	480	3,4	K-2157
240/416	3	4	416	3	Consult Factory

Katolight Service - Master Repair Manual - Page 4444

Delayed Transition - 1600 to 3000 Amps

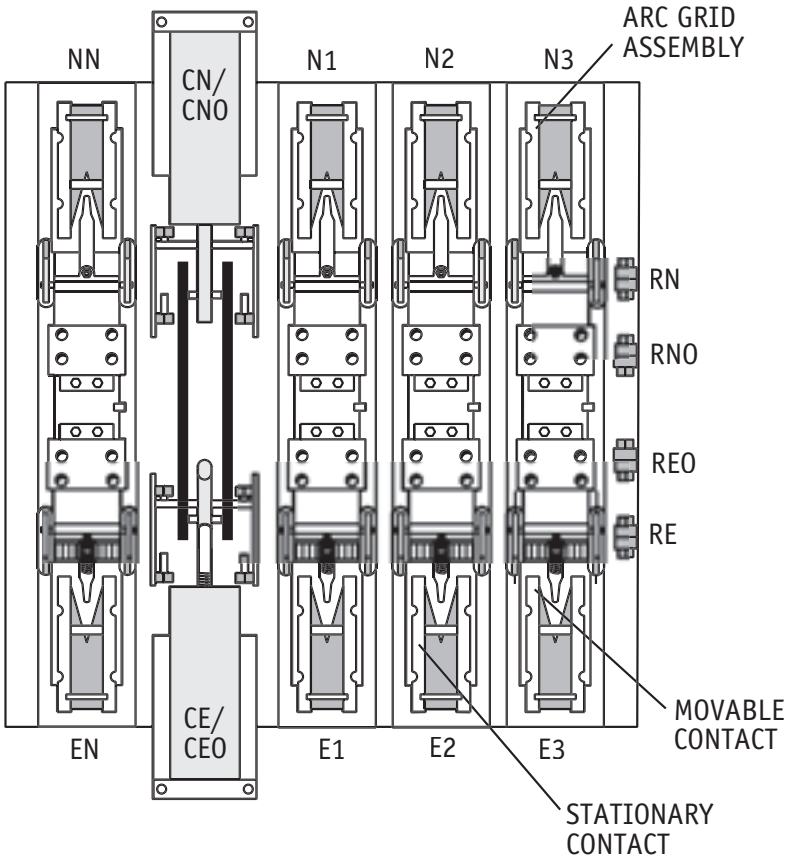

Tag	Description	Recommended as Spares	Stock Numbers by Amperage		
			1600	2000	3000
N1,2,3 E1,2,3 T1,2,3 NLN,ELN	Cable Connection Lug, CU Wire		S-1126F(2) Optional (8) 600MCM-2		
	Stationary Contact Assembly Kit		23P-4134X	23P-4134Y	23P-4134Z
	Arc Grid Assembly Kit		23P-1171	23P-1171	23P-1171
	Movable Contact Assembly Kit		23P-1400	23P-1400	23P-1344
CN/CNO CE/CEO	Main Operator Solenoids	*	**See Chart Below**		

Voltage System					Solenoid Part No.		
Volts	Ph	Wire	Coil VDC	Pole			
120	1	2	120	2	S.P.O.	S.P.O.	S.P.O.
120/240	1	3	240	2,3	K-2151	K-2151	K-2151
240	3	3	240	3	K-2151	K-2151	K-2151
120/208	3	4	208	3,4	K-2151	K-2151	K-2151
480	3	3	480	3	K-2160	K-2160	K-2160
575	3	3	575/600	3	S.P.O.	S.P.O.	S.P.O.
277/480	3	4	480	3,4	K-2160	K-2160	K-2160
120/240	2	4	240	4	K-2151	K-2151	K-2151
240/416	3	4	416	3	Consult Factory		

Operating Coil Hardware Kit				
SN/SNO-1,2	Switch Bracket Assembly	23P-1540	23P-1540	23P-1540
SE/SEO-1,2	Switch Bracket Assembly	23P-1541	23P-1541	23P-1541
SN/SNO-3,4	Switch Bracket Assembly	23P-1542	23P-1542	23P-1542
SE/SEO-3,4	Switch Bracket Assembly	23P-1543	23P-1543	23P-1543

Katolight Service - Master Repair Manual - Page 4445

Katolight Service - Master Repair Manual - Page 4446

Katolight Service - Master Repair Manual - Page 4447



GE Zenith Controls

A Product of GE Industrial Systems
General Electric Company
830 West 40th Street, Chicago, IL 60609 USA
773 299-6600, Fax: 773 247-7805
www.geindustrial.com

GE Zenith Controls

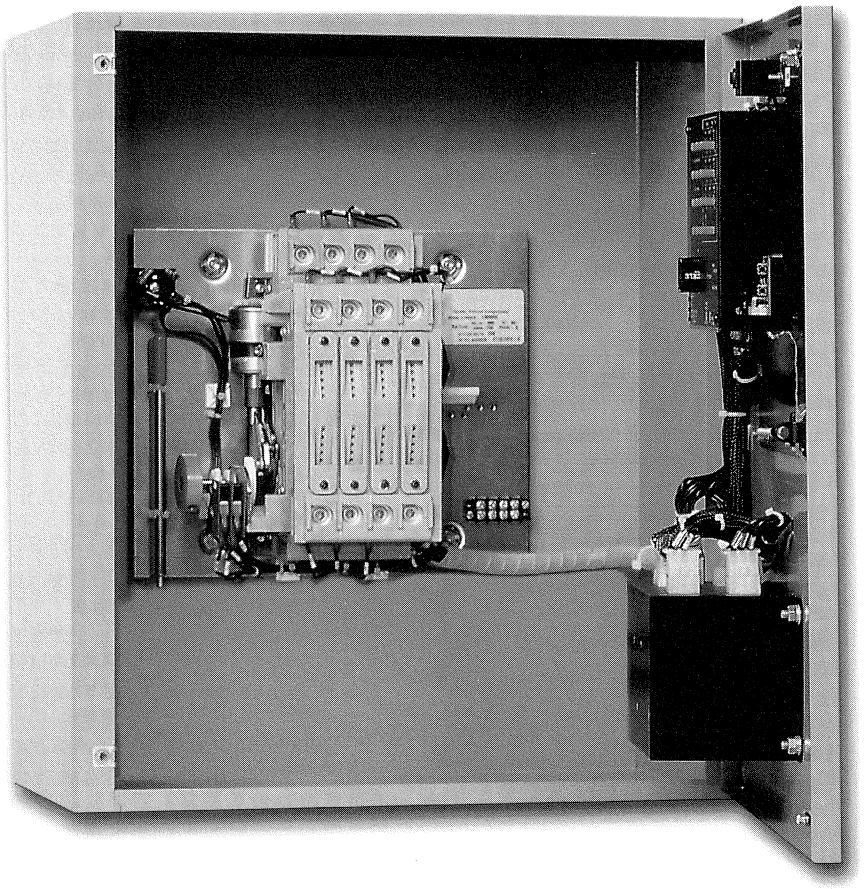

52R-1000G
4/01

Operation and Maintenance Manual

Katolight Service - M[illegible]

Authorized Service

For GE parts and service, call: 773 299-6600

Table of Contents

	Page
Introduction	1
Safety	2
Equipment Inspection and Storage	2
Final Equipment Inspection	2
Installation	3
Mounting	3
Power Connections	3
Engine Start Control Connections	4
Functional Test	5
Initial Energization	6
Operation and Testing	7
Standard Transition ATS Testing (w/o A6 or T3/W3)	7
Delayed Transition ATS Testing	7
Standard Transition ATS Testing (w/A6 or T3/W3)	9
Sequence of Operation — Standard Transition	10
Operation Sequence	10
Control Features	10
Control Options	11
Sequence of Operation — Delayed Transition	12
User Settings	13
Voltage and Frequency Pickup/Dropout Adjustments	13
Timer Adjustments	14
Maintenance and Testing	15
Inspection and Cleaning	15
Servicing	15
Testing	15
Troubleshooting and Diagnostics	16
General Troubleshooting	16
Diagnostic Annunciation	17
Standard Transition ATS	17
Delayed Transition ATS	18
Standard Transition ATS (w/A6)	19
Replacement Parts	20
Power Panel — 40 to 260 Amps Linear Actuator Type	20
Power Panel — 40 to 225 Amps Solenoid Type	21
Power Panel — 225 to 400 Amps Molded Type	22
Power Panel — 400 Amps Metal Frame Type	23
Power Panel — 600 to 1200 Amps	24
Power Panel — 1600 to 3000 Amps	25
Delayed Transition — 40 to 260 Amps	26
Delayed Transition — 400 Amps	27
Delayed Transition — 600 to 1200 Amps	28
Delayed Transition — 1600 to 3000 Amps	29
Relay/Transformer Box (R/T Box) — Standard Transition	30
Relay/Transformer Box (R/T Box) — Delayed Transition	31
Relay/Transformer Box (R/T Box) — Standard Transition R/T Box Schematic	32
Relay/Transformer Box (R/T Box) — Delayed Transition R/T Box Schematic	32
Standard Drawings Technical Reference	33

Table of Contents — Standard Drawings

	Page
52A-7000, Page 1	34
52A-7000, Page 2	35
52A-7001, Page 1	36
52A-7001, Page 2	37
52A-1000, Page 1	38
52A-1000, Page 2	39
52A-1001, Page 1	40
52A-1001, Page 2	41
52A-2000, Page 1	42
52A-2000, Page 2	43
52A-2001, Page 1	44
52A-2001, Page 2	45
52A-3000, Page 1	46
52A-3000, Page 2	47
52A-3001, Page 1	48
52A-3001, Page 2	49
52A-8000, Page 1	50
52A-8000, Page 2	51
52A-8001, Page 1	52
52A-8001, Page 2	53
52A-4000, Page 1	54
52A-4000, Page 2	55
52A-4001, Page 1	56
52A-4001, Page 2	57
52A-5000, Page 1	58
52A-5000, Page 2	59
52A-5001, Page 1	60
52A-5001, Page 2	61
52A-6000, Page 1	62
52A-6000, Page 1	63
52A-6001, Page 1	64
52A-6001, Page 2	65
50R-1012, Page 1	66
50R-1012, Page 2	67
50R-1006, Page 1	68
50R-1006, Page 2	69
50R-1002, Page 1	70
50R-1002, Page 2	71
50R-1003, Page 1	72
50R-1003, Page 2	73
50R-1003, Page 3	74
50R-1020	75
50R-1008	76
50R-1001, Page 1	77
50R-1001, Page 2	78
50R-1001, Page 3	79
50R-1024	80
50R-1010	81
50R-1022	82

Introduction

GE Zenith Transfer Switches are used to provide a continuous source of power for lighting and other critical loads by automatically transferring from the normal source of power to an emergency source of power in the event that the normal source voltage falls below preset limits.

Voltage sensing and system control is performed via a state-of-the-art microcontroller located on the cabinet door. It is designed to give highly accurate control of the transfer switch system.

All GE Zenith transfer switches are designed for use on emergency or standby systems, and are rated for total system or motor loads. Transfer switches are UL Listed under Standard 1008 and CSA Certified under Standard C22.2 No. 178 and IEC Listed under Standard 947.

Katolight Service - Master Repair Manual - Page 4453

Safety

⚠ DANGER ⚠

HAZARDOUS VOLTAGE
(Can Cause Severe Injury or Death)

Turn OFF all power before installation, adjustment, or removal of transfer switch or any of its components.

The safe operation of your switch is GE Zenith's focus. The proper storage, installation, operation and maintenance will help increase the life of the switch.

⚠ CAUTION ⚠

Due to hazardous voltage and current, GE Zenith recommends that a GE Zenith Certified technician or a qualified electrician must perform the installation and maintenance of the switch.

Equipment Inspection and Storage

Once you have received the transfer switch, inspect it for any damage. This includes damage to the enclosure, power panel, control panel and wiring harness. If any damage is found or suspected, file a claim as soon as possible with the carrier and notify the nearest GE Zenith representative.

Before installation, it is necessary to store the transfer switch in a clean dry place, protected from dirt and water. Provide ample air circulation and heat, if necessary, to prevent condensation.

Storage Temperature	Operating Temperature (Ambient):	Humidity
-30°C to +75°C (-22°F to +167°F)	**40-400 AMP** *(molded shell)* -20°C to +65°C (-4°F to +149°F) **40-4000 AMP** *(all other frame and panel types)* -20°C to +60°C (-4°F to +140°F)	5% to 95% (non-condensing)

Final Equipment Inspection

Prior to energizing the transfer switch:

1. Remove any debris incurred, with a vacuum, due to shipment or installation.

⚠ WARNING ⚠

Do not use a blower since debris may become lodged in the electrical and mechanical components and cause damage.

2. Verify that all cabled connections are correct and that phase rotation of both sources match.
3. Check engine start connections.
4. Verify the correct connection of all control wires.
5. Check settings of all timers and adjust as necessary.
6. Adjust any optional accessories as required.
7. Check the lug torque values of the power connections.

NOTE: Lug torque values are specified in the power panel manual.

8. Make sure that all covers and barriers are installed and properly fastened.

NOTE: Power panels ship from GE Zenith in the Normal Position.

Katolight Service - Master Repair Manual - Page 4454

Installation

⚠ DANGER ⚠

HAZARDOUS VOLTAGE
(Can Cause Severe Injury or Death)

Turn OFF all power before installation, adjustment, or removal of transfer switch or any of its components.

Each GE Zenith transfer switch is factory wired and tested. A complete information package is furnished with each switch which includes:

a. Sequence of operation.
b. Description and operation of all accessories supplied.
c. Power panel connection diagram and schematic.
d. Description and identification of all customer field connections.

Installation of GE Zenith transfer switches includes:

a. Mounting the transfer switch cabinet.
b. Connection of all Normal, Emergency, and Load cables or bus bars.
c. Connection of external control circuits as required.

Mounting

Adequate lifting means must be used to mount the transfer switch into place. The recommended method for moving the transfer switch using the lifting eyes, where supplied, and a spreader bar is illustrated in *Figure 1*. Enough room should be allowed to open the cabinet doors fully for inspection and servicing of the switch per NEC and local codes.

⚠ CAUTION ⚠

Before drilling conduit entry holes or any accessory mounting holes, cover and protect the switch and control panel to prevent dirt and metal fragments from entering the mechanical and electrical components.

Failure to do so may result in damage and malfunction of the switch.

Power Connections

GE Zenith transfer switches are supplied with UL listed solderless screw type terminals as standard for the Normal, Emergency and Load power connections. *Table 1* lists the number and sizes of cable lugs supplied as standard for each switch amp rating.

Connect the Normal, Emergency, and Load conductors to the clearly marked terminals on the transfer switch. Remove surface oxides from cables by cleaning with a wire brush. Verify that all connections are correct before tightening the lugs. All cable lug connections must be tightened to the proper torque values as shown in *Table 2*.

NOTE: Do not run cables or wiring behind front-connected transfer switches.

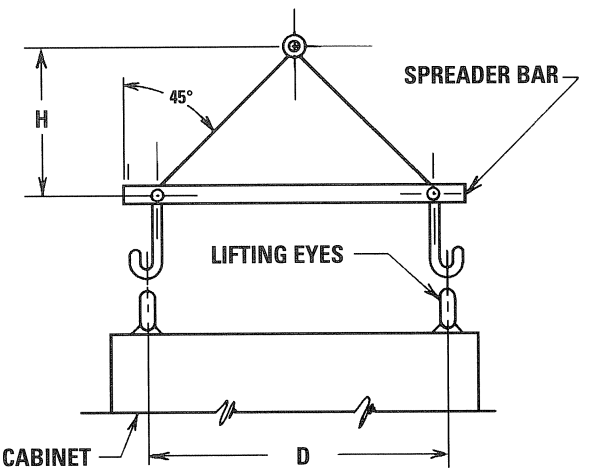

Figure 1

NOTE: When lifting the switch using a spreader bar, height H must be equal to half of distance D.

Katolight Service - Master Repair Manual - Page 4455

Screw Type Terminals for External Power Connections				
Switch Size (Amps)	Normal, Emergency & Load Terminals		Neutral Bar (When Required)	
	Cable Per Pole	Range of Wire Sizes	No. of Cables	Range of Wire Sizes
40	1	#8 to 1/0 AWG	3	#8 to 1/0 AWG
80	1	#8 to 1/0 AWG	3	#8 to 1/0 AWG
100	1	#8 to 1/0 AWG	3	#8 to 1/0 AWG
150	1	#8 to 3/0 AWG	3	#8 AWG to 300 MCM
200, 225, 250*(1)	1	#6 AWG to 250 MCM	3	#6 AWG to 300 MCM
260, 300*, 400	1	#4 AWG to 600 MCM	3	#4 AWG to 300 MCM
600	2	#2 AWG to 600 MCM	8	#2 AWG to 600 MCM
800, 1000, 1200	4	#2 AWG to 600 MCM	12	#2 AWG to 600 MCM
1600, 2000 2600, 3000	8	#2 AWG to 600 MCM	12	#2 AWG to 600 MCM

Table 1 (1) 200 amp unit utilizes #6 ō 250 MCM wire effective approximately 11/1/00.

Engine Start Control Connections

Engine-start control wires connect to control terminals below of the MX100. Engine start terminals are indicated by a schematic symbol (the symbol indicates the contact state for a de-energized Normal source). *Figure 2* shows the engine-start contacts.

Make all other necessary control connections to the control panel terminal blocks per the schematics supplied with the ATS.

NOTE: All control wires (18-12 AWG) must be torqued to 19 in/lbs.

Tightening Torque for Lugs		
Socket Size Across Flats	Torque	
	Lb. - In.	Lb. - Ft.
1/8	45	4
5/32	100	8
3/16	120	10
7/32	150	12
1/4	200	17
5/16	275	23
3/8	375	31
1/2	500	42
9/16	600	50

Table 2

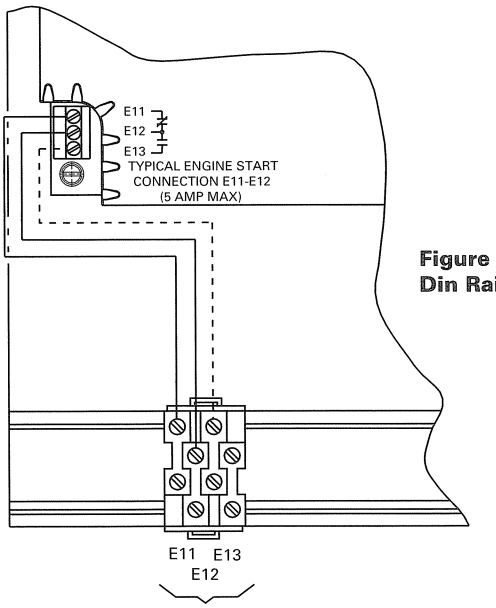

Figure 2 – Din Rail

The engine-start terminals are clearly identified by a label on the microcontroller backplate. In the case of manual transfer switches, or in other applications not requiring the microprocessor, clearly marked terminal blocks are provided in the upper left corner of the control panel for the engine start control wires.

Terminals for field connections to the A3 Emergency auxiliary contacts and the A4 Normal auxiliary contacts are also provided. These terminals are clearly marked and appear on the side of the power panel (right hand side for 30-400 A switch). On 400 amp metal frame units these terminals appear on the bracket above the operator handle.

* IEC Ratings Only

Katolight Service - Master Repair Manual - Page 4456

⚠ DANGER ⚠

HAZARDOUS VOLTAGE
(Can Cause Severe Injury or Death)

Turn OFF all power before installation, adjustment, or removal of transfer switch or any of its components.

Functional Test

Functional testing of the ATS consists of electrical tests described in this section. Before proceeding, refer to the information package supplied with the ATS and read and understand the information on all accessories provided.

⚠ CAUTION ⚠

Certain accessories, per specific schematics, can inhibit automatic transfer.

1. Unlock the enclosure.
2. Open the enclosure.
3. Verify the correct system voltage.

NOTE: The equipment rating nameplate on the transfer switch lists the voltage. See *Figure 3*.

4. Close the Normal source circuit. breaker.

NOTE: The controller will illuminate the Normal Available LED if proper voltage is sensed.

WARNING – HIGH VOLTAGE SET

5. Verify the phase to phase voltages at the Normal line terminals.
6. Close the Emergency source circuit breaker.
7. Start the generator's engine.

NOTE: The controller will illuminate the Emergency Available LED when preset voltage and frequency levels are reached.

8. Verify the phase to phase voltages at the Emergency line terminals.
9. Verify that the phase rotation of the Emergency source is the same as the phase rotation of the Normal source.
10. Shut down the generator's engine.
11. Place the starting control in the Automatic position.
12. Complete the visual inspection of the transfer switch.
13. Close the enclosure.
14. Lock the enclosure.

GE Zenith Controls

SERIAL NUMBER:
RATING: VOLTS - HZ -
AMPS - PHASE -
SYSTEM VOLTS:
MODEL NUMBER:

Figure 3

⚠ CAUTION ⚠

Engine Gen-Set could start when engine control wires are attached.

Katolight Service - Master Repair Manual - Page 4457

Initial Energization

After all options and accessories are checked and verified, follow these steps to set up the ATS. Refer to MX100 display *Figure 4*. The annunciation LEDs illuminate to indicate (1) source availability, (2) ATS position, and (3) MX100 control function (timing).

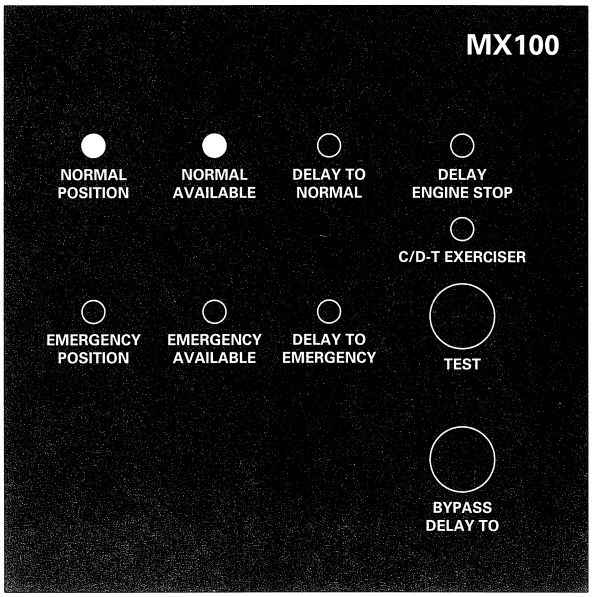

Figure 4 – Standard Transition Annunciation LEDs and Test Switch

NOTE: If LEDs are flashing, refer to Troubleshooting and Diagnostics.

1. Unlock the enclosure.
2. Open the enclosure.
3. Place the Disconnect Switch in the Inhibit.

NOTE: This step is only performed if the "DS" Option was purchased.

4. Close the external (up-stream) Normal circuit breaker.

NOTE: The normal Available and Normal Position LED's will illuminate.

NOTE: If the Normal Available LED does not illuminate, verify that the Normal Source Voltage is above the preset pick-up value.

NOTE: On the initial start-up, the Delay to Engine Stop Timing LED will illuminate for the duration of its setting.

NOTE: The Gen-Set will start and run while Delay to Engine Stop is timing.

5. Close the External (up-stream) Emergency line circuit breaker.
6. Start the engine generator in MANUAL mode.

NOTE: When the voltage and frequency reach preset values, the Emergency Available LED will illuminate.

7. Verify the phase to phase voltages at the Emergency line terminals.
8. Verify that the phase rotation of the Emergency source is the same as the phase rotation of the Normal source. (either A-B-C or A-C-B.)
9. Shut down the generator's engine. (Place in Automatic Mode.)

NOTE: The Emergency Available LED will turn off.

NOTE: The engine generator will continue to run if the Delay to Engine Stop LED is illuminated.

10. Place the disconnect switch to ENABLE.
11. Complete the visual inspection of the transfer switch.
12. Close the enclosure.
13. Lock the enclosure.

Katolight Service - Master Repair Manual - Page 4458

Standard Transition ATS Testing (w/o A6 or T3/W3)

For this test description, please refer to MX100 standard transition display *Figure 4.*

Initiate testing with the ATS in Normal position and Normal power available (Normal Position and Normal Available LEDs illuminated).

Step 1: Press and hold the test switch until transfer.

NOTE: Releasing the test switch prematurely will abort the test.

The delay to engine start timer (P) begins its timing cycle. After the P timer has completed its timing cycle, the engine start contacts close to start the generator.

When Emergency voltage and frequency reach preset pickup points the Emergency Available LED illuminates. Simultaneously, the delay to emergency timer (W) begins its timing cycle and the Delay to Emergency LED illuminates. When the W time delay is completed the switch will transfer to emergency. The Delay to Emergency and Normal Position LEDs go off, and the Emergency Position LED illuminates.

Step 2: Release the test switch to start retransfer to Normal.

The delay to normal timer (T) begins its timing cycle illuminating the Delay to Normal LED. When the T timer has completed its timing cycle the switch will transfer into Normal. The Delay to Normal and Emergency Position LEDs go off, and the Normal Position LED illuminates. The delay engine stop timer (U) begins its timing cycle and the Delay Engine Stop LED illuminates. The generator runs unloaded for the duration of the U timing cycle. When the timer completes its timing cycle, the generator will stop. The Delay Engine Stop and the Emergency Available LEDs go off.

NOTE: A periodic test of the transfer switch under load conditions is recommended to insure proper operation. (See National Electric Code articles 700 and 701).

Delayed Transition ATS Testing

Refer to Delayed Transition display *Figure 5.* Initiate testing with the ATS in Normal position and Normal power available (Normal Position and Normal Available LEDs illuminated).

Step 1: Press and hold the test switch until transfer (releasing the test switch prematurely will abort the test).

The delay to engine start timer (P) begins its timing cycle. After the P time delay the engine start contacts close to start the generator.

When Emergency voltage and frequency reach the preset pickup points the Emergency Available LED illuminates. Simultaneously, the delay to open normal timer (W) begins its timing cycle and the Delay to Open Normal LED illuminates. After the W time delay the ATS transfers out of Normal position into the Open position. The Delay to Open Normal and Normal Position LEDs go off, and the Open Position and Delay to Emergency LEDs illuminate.

Step 2: Release the test switch.

Time delay to emergency (DW) then begins. When the DW time delay is completed the switch will transfer to Emergency. The Delay to Emergency and Open Position LEDs go off, and the Emergency Position LED illuminates.

The MX100 microcontroller will automatically begin the retransfer sequence to Normal. The delay to open emergency (T) timer begins its timing cycle and the Delay to Open Emergency LED illuminates. When the T timer has completed its timing cycle, the ATS transfers to the open position. The Delay to Open Emergency and the Emergency Position LEDs turn off, and the Open Position and the Delay to Normal LEDs illuminate. The delay to normal timer (DT) then begins its timing cycle illuminating the Delay to Normal LED. When the DT timer has completed its timing cycle the ATS will transfer out of the open position into the Normal position. Delay to Normal and the Open Position LEDs turn off, and the Normal Position LED illuminates.

The delay engine stop timer (U) begins its timing cycle and the Delay Engine Stop LED illuminates. The generator runs unloaded for the duration of the U timing cycle. Upon completion of the U time delay, the generator will stop. The Delay Engine Stop and the Emergency Available LEDs go off.

Katolight Service - Master Repair Manual - Page 4459

Operation and Testing *(cont'd)*

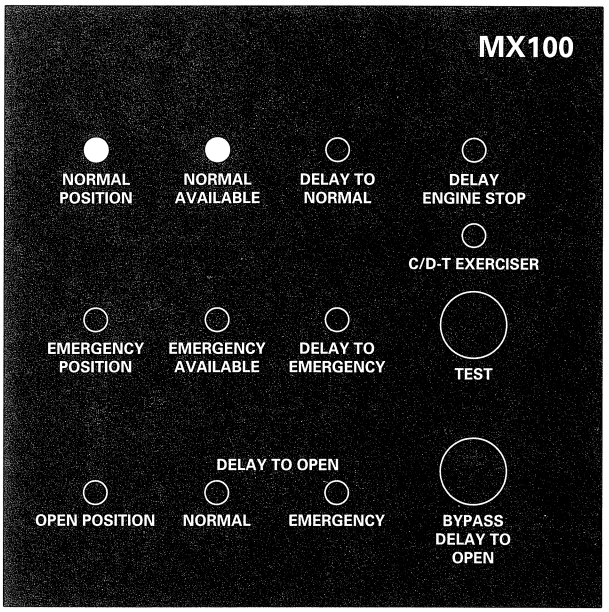

Figure 5 – Delayed Transition Annunciation LEDs and Test Switch

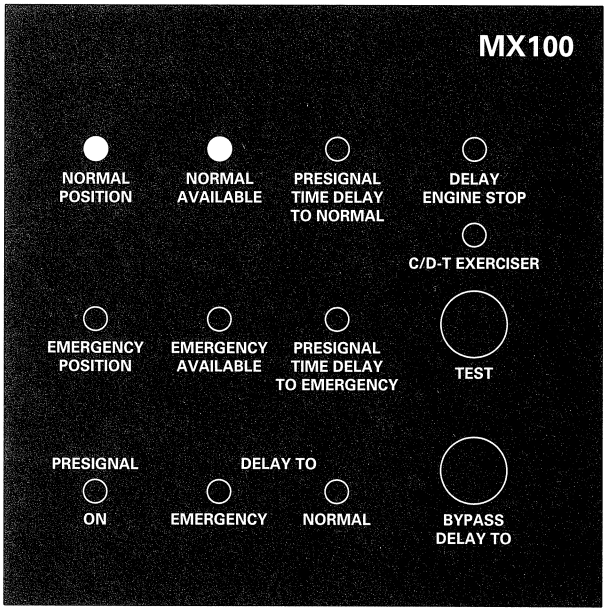

Figure 6 – Standard Transition w/A6 Annunciation LEDs and Test Switch

Standard Transition Transfer Sequence (w/o A6 or T3/W3)	LED Annunciation Status						
	Normal Position	Normal Available	Emergency Position	Emergency Available	Delay to Normal	Delay to Emergency	Delay Engine Stop
Normal Position	●	●					
W Time Delay	●	○		●		●	
Emergency Position		○	●	●			
T Time Delay		●	●	●	●		
Normal Position/ Engine Overrun Timer	●	●		●			●

○ Illuminated only when running TEST, not on Normal power failure

Delay Transition Transfer Sequence	LED Annunciation Status									
	Normal Position	Normal Available	Emergency Position	Emergency Available	Delay to Normal	Delay to Emergency	Delay Engine Stop	Open Position	Delay to Open Normal	Delay to Open Emergency
Normal Position	●	●								
W Time Delay	●	○		●					●	
Open Position/DW Time Delay		○		●		●		●		
Emergency Position		○	●	●						
T Time Delay		●	●	●						●
Open Position/DT Time Delay		●		●	●			●		
Normal Position/ Engine Overrun Timer	●	●		●			●			

○ Illuminated only when running TEST, not on Normal power failure

Katolight Service - Master Repair Manual - Page 4460

Standard Transition ATS Testing (w/A6 or T3/W3)

Refer to Standard Transition w/A6 or T3/W3 display *Figure 6.* Initiate testing with the ATS in Normal position and Normal power available (Normal Position and Normal Available LEDs illuminated).

Press and hold the test switch until transfer (releasing the test switch prematurely will abort the test).

The delay to engine start timer (P) begins its timing cycle. After the P time delay the engine start contacts close to start the generator.

When Emergency voltage and frequency reach the preset pickup points the Emergency Available LED illuminates. Simultaneously, the delay to emergency timer (W) begins its timing cycle and the Delay to Emergency LED illuminates. After the W time delay the ATS presignal is initiated. The Delay to Emergency and Normal Position LEDs go off, and the Presignal On and Presignal Time Delay to Emergency LEDs illuminate.

Release the test switch.

Presignal Time Delay to emergency (TA6) then begins. When the TA6 time delay is completed, the switch will transfer to Emergency. The Presignal Time Delay to Emergency and Presignal On LEDs go off, and the Emergency Position LED illuminates.

The MX100 microcontroller will automatically begin the retransfer sequence to Normal. The delay to normal (T) timer begins its timing cycle and the Delay to Normal LED illuminates. When the T timer has completed its timing cycle, the ATS presignal is initiated. The Delay to Normal and the Emergency Position LEDs turn off, and the Presignal On and the Presignal Time Delay to Normal LEDs illuminate. The Presignal Time Delay to normal (TA5) then begins. When the TA5 timer has completed its timing cycle, the ATS will transfer to the Normal position. Presignal Time Delay to Normal and Presignal On LEDs turn off, and the Normal Position LED illuminates.

The delay engine stop timer (U) begins its timing cycle and the Delay Engine Stop LED illuminates. The generator runs unloaded for the duration of the U timing cycle. Upon completion of the U time delay, the generator will stop. The Delay Engine Stop and the Emergency Available LEDs go off.

The MX100 continuously monitors source voltage. In the event that Normal voltage falls below a preset drop-out value, the unit will perform in exactly the same way as noted in the test procedure (either standard transition or delayed transition).

NOTE: A periodic test of the transfer switch under load conditions is recommended to insure proper operation. (See National Electric Code articles 700 and 701).

⚠ WARNING ⚠

When performing a hi-pot or dielectric test on the power section, DISCONNECT the control panel plugs from the microprocessor to avoid potential damage.

Standard Transition Transfer w/A6 or T3/W3 Sequence	LED Annunciation Status									
	Normal Position	Normal Available	Emergency Position	Emergency Available	Presignal Time Delay to Normal	Presignal Time Delay to Emergency	Delay Engine Stop	Presignal On	Delay to Emergency	Delay to Normal
Normal Position	●	●								
W Time Delay	●	○		●					●	
Open Position/TA6 Time Delay		○		●		●		●		
Emergency Position		○	●	●						
T Time Delay		●	●	●						●
Open Position/TA5 Time Delay		●		●	●			●		
Normal Position/ Engine Overrun Timer	●	●		●			●			

○ Illuminated only when running TEST, not on Normal power failure

Katolight Service - Master Repair Manual - Page 4461

Sequence of Operation - Standard Transition

Operation Sequence

Normal Power Failure. When Normal voltage has fallen below the preset dropout value, the engine start (P) timer begins its timing cycle (factory set 3 seconds). The P timer allows for momentary undervoltage conditions in the Normal source without triggering the generator to start. If the Normal voltage remains below the dropout point throughout the P timing cycle, a generator start signal will be sent. The MX100 then monitors generator voltage and frequency to determine if they are within preset parameters. When the generator voltage and frequency reach acceptable limits the W timer begins its timing cycle. The W timer governs either the time delay for transfer to Emergency or to the open position (standard or delayed transition, respectively). The W timer (typically 1 second) assures that the generator voltage and frequency are stable before transfer. The transfer to Emergency sequence is then completed as follows:

Standard Transition—after the W time delay, the ATS transfers to Emergency position and load power is supplied by the generator.

Delayed Transition—following the W time delay, the switch opens out of Normal to the Open position. The DW timer is activated. The DW time delay is typically set to 5 seconds. After the DW time delay, the switch completes transfer to Emergency.

Standard Transition w/A6 or T3/W3—following the W time delay, the presignal is initiated. The TA6 timer is started. The TA6 time delay is typically set to 5 seconds. After the TA6, the ATS transfers to Emergency.

When the W time is completed, the CCE relay energizes the CE solenoid to close the transfer switch into the emergency source. The SE limit switch activates to de-energize the CCE relay.

Restoration of Normal Power. When Normal power reaches the preset pickup value, the T timer begins its timing cycle (factory set 30 minutes). The T timer is used to ensure that the Normal source has fully restored before retransfer. If Normal voltage remains above the pickup values for the duration of the T timer, transfer to Normal position is performed. Retransfer is accomplished as follows:

Standard Transition—ATS transfers to the Normal position and the load power is supplied by utility.

Delayed Transition—the switch opens out of Emergency to the Open position. The DT timer activates, typically set to 5 seconds. After the DT time delay, the switch completes transfer to Normal.

Standard Transition w/A6 or T3/W3—following the T time delay, the presignal is initiated. The TA5 timer is started. The TA5 time delay is typically set to 5 seconds. After the TA5, the ATS transfers to Normal.

When the T time delay is completed, the CCN relay energizes the CN solenoid to retransfer the switch into the normal source. The SN limit switch activates to de-energize the CCN relay. Simultaneously, the engine over-run timer U begins its timing cycle. This timer provides a period of time for the engine generator to run without load and cool down before shutdown.

Control Features

A6. Motor load disconnect capability (standard transition only). Ensures that closing into the oncoming source does not create a large disturbance due to phase angle difference between the load and the oncoming source. Motor loads can be disconnected for an adjustable period of 0-60 seconds prior to transfer of the main contacts. This feature includes LEDs to indicate when the motor load is disconnected.

CDT Exerciser. A built in 7 day exerciser timer is incorporated into the MX100, (standard feature, all models). Pressing the initiate switch will start a timer that will continue for 167 hours and 40 minutes. Along with initiating the timer, an LED will illuminate to indicate that the timer has been started. After 167 hours and 40 minutes, a load test (ATS transfers to Emergency) or a no load test (ATS signals the genset to start but does not transfer) occurs. The exercise mode is determined by the MX100 PCboard jumper location (TSL = load, TSNL = no load). The test lasts for 20 minutes. The CDT Exerciser LED will flash when the exercising is in progress. This 20 minute exercise does not include the time delay to retransfer to normal (T timer) when the ATS is transferred (load test) or the time delay engine stop (U timer) for either load or no load tests. Disabling the exercise event is done by pressing the disable/enable switch. When this is done the exercise event will not occur, although the timer will not be affected. The CDT Exerciser LED will turn off when the disable/enable switch is pressed for the first time after initiating the timer. Pressing the disable/enable switch again will re-enable the exercise event while turning the CDT Exerciser LED back on. The time of the exercise event can be changed by re-initiating the event. The time that the button is pressed will be the end of the exercise event one week later.

Katolight Service - Master Repair Manual - Page 4462

CDT Exerciser Notes

1. To avoid unintentional intiating/disabling the button should be held down for 3 seconds when pressed.
2. A 9V battery is supplied to prevent CDT exercise timer from losing it's "set exercise time" in the event of an extended power outage. The battery can back up the processor for up to 8 hours. The battery should be replaced if it has supplied power to the microprocessor for an extended outage.
3. The 9V battery cannot be plugged into a PCboard that is deenergized. The PCboard includes large capacitors that the battery will not be able to charge. If the capacitors are charged, the battery will still discharge eventually due to the load of the PCboard. Therefore, do not install a battery until the PCboard is energized. The battery will then be able to maintain the CDT "set exercise time" in the event of an extended outage.

R50. In-phase monitor (standard transition w/o A6 only). R50 ensures that the phase angle difference between the load voltage and the oncoming source voltage is minimal (live source-to source transfers). The feature requires a fast acting transfer switch, therefore is only available with a standard transition ATS. The in-phase monitor is suitable for isochronous through 3% droop governors. The microprocessor anticipates the synchronized condition by monitoring the phase angle and frequency differential between the sources. Then it signals a transfer at the precise moment to ensure minimal phase difference between the sources at the completion of transfer. R50 also includes a PCboard-mounted switch to override the in-phase monitor function if necessary. The override toggle switch is located below the MX100 cover, but the toggle position to enable or disable the function is clearly indicated on the cover.

YEN. Pushbutton time delay transfer/retransfer bypass.

Control Options

Six control input options can be used with the MX100:

- 6A
- C
- C/D
- D
- Q2
- ZNET100

Note: Consult the factory when field adding Q2 option.

6A. Maintained test switch. An auxiliary two position maintained test switch is located on the cabinet door. This is in addition to the standard test switch found on all MX100 models. When the auxiliary test switch is activated in the TEST position, it will simulate a Normal line failure. The transfer switch will automatically transfer the load to the Emergency position. When the test switch is returned to the AUTOMATIC position the transfer switch will restore the load to the Normal position. Should Emergency fail while ATS is in Emergency position the ATS will transfer back to Normal immediately, if Normal is available.

C. *Plant Exerciser.* Automatically starts generator for selected time intervals. Runs generator unloaded.

C/D. *Plant Exerciser.* Automatically starts generator to run unloaded, or simulate a power failure and starts generator to run under load.

D. *Plant Exerciser.* Automatically starts generator for select time intervals. Simulates a power failure and runs generator under load.

Q2. *Connections for remote peak shave or area protection.* Includes bypass for immediate return to Normal if Emergency line fails and Normal is available.

ZNET100. *Communication Capability.* The MX100 can be equipped with an optional network card that allows digital communication of ATS position, source availability, control timers and test mode. A test signal can also be initiated from a remote PC or annunciator panel. Communication is via one twisted pair of wires.

Katolight Service - Master Repair Manual - Page 4463

Sequence of Operation - Delayed Transition

Transfer of the load to the Emergency source begins automatically when any phase of the Normal source falls below the preset dropout point and this under-voltage failure condition is detected by the MX100 microcontroller. The engine start timer P begins its timing cycle. The P time delay is provided to override momentary outages and to prevent nuisance starting of the engine generator. If the Normal source voltage returns above the pickup setting, the P timing cycle is reset, and the transfer sequence is stopped.

If the normal source voltage does not return before the P time delay is completed, the P timer drops out and sends a starting signal to the engine generator. The microcontroller senses the voltage and frequency of the Emergency source. When both the voltage and the frequency of the Emergency source reach the preset values timer W begins its timing cycle. The W timer provides an adjustable transfer delay to the Emergency source as required.

When the W time is completed, the CCNO relay energizes the CNO solenoid to open the transfer switch out of the Normal source. The switch is now in a neutral (both sources open) position. The switch remains in a neutral position for the duration of the DW time delay. DW is an adjustable time delay between the opening of the Normal source and closing into the Emergency source.

After the DW time delay has elapsed, the CCE relay energizes. The switch then completes transfer to the Emergency source by energizing the CE solenoid. The SE limit switch activates to de-energize the CCE relay.

The sequence for retransfer to the Normal source begins automatically when the microcontroller detects that the voltage on all phases of the Normal source has been restored.

When the Normal source restores, switching to the Normal source is initiated by energizing timer T, beginning its timer cycle. The T timer provides an adjustable delay to insure that the Normal source has stabilized before reconnection to the load. If the Normal source fails before the T time delay completes, the retransfer sequence is stopped.

When the T time delay is completed, the CCEO relay energizes the CEO solenoid to open the switch out of Emergency and into a neutral position. The switch remains in neutral for the DT time delay. When the DT time delay has elapsed, the CCN relay energizes the CN solenoid to complete retransfer of the switch into the normal source. The SN limit switch activates to de-energize the CCN relay. Simultaneously, the engine overrun timer U begins its timing cycle. This timer provides a period of time for the engine generator to run without load and cool down before shutdown.

Katolight Service - Master Repair Manual - Page 4464

User Settings

All user settings are adjustable on the back of the MX100 display. *Figure 6* shows the MX100 user adjustments.

Voltage and Frequency Pickup/Dropout Adjustments

Normal Pickup Voltage %: Pickup voltage is adjustable from 85 to 100% of nominal line voltage. Standard factory setting is 90%.

Normal Dropout Voltage %: The dropout voltage is adjustable from 75 to 98% of nominal line voltage. Standard factory setting is 80%. Dropout must be a minimum of 2% below Normal pickup voltage under all conditions. Note: The microprocessor will automatically set the Normal dropout voltage 2% below the Normal pickup voltage if it is not properly set by the user.

Normal Pickup Frequency %: The pickup frequency is adjustable from 90 to 100% of nominal line frequency. Standard factory setting is 90%.

Emergency Pickup Voltage %: The pickup voltage is adjustable 85 to 100% of nominal line voltage. The standard factory setting is 90%.

Emergency Dropout Voltage %: The dropout voltage is adjustable from 75 to 98% of nominal line voltage. Standard factory setting is 80%. Emergency dropout voltage must be a minimum of 2% below emergency pickup voltage under all conditions. *Note:* The microprocessor will automatically set the Emergency dropout voltage 2% below the Emergency pickup voltage if it is not properly set by the user.

Emergency Pickup Frequency %: The pickup frequency is adjustable from 90 to 100% of nominal line frequency. Dropout is fixed at 2 Hz below pickup. Dropout has a 5 second delay. Standard factory setting is 95%.

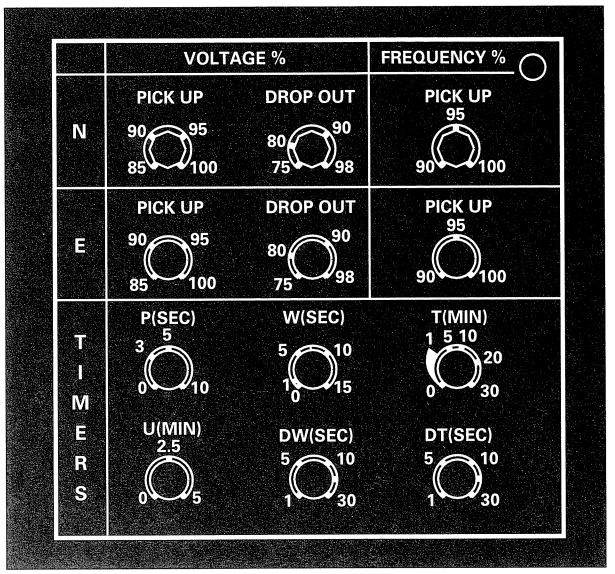

Figure 7 – Delayed Transition User Adjustments

Factory Settings of Voltage, Frequency and Timer Adjustments	
Normal Pickup Voltage	90% Nominal V
Normal Dropout Voltage	80% Nominal V
Normal Pickup Frequency	90% Nominal F
Emergency Pickup Voltage	90% Nominal V
Emergency Dropout Voltage	80% Nominal V
Emergency Pickup Frequency	95% Nominal F
P Timer	3 seconds
W Timer	1 second
T Timer	30 minutes
U Timer	5 minutes
DW Timer *	5 seconds
DT Timer *	5 seconds
TA5 **	5 seconds
TA6 **	5 seconds

* Delayed
** Standard w/A6 or T3/W3
V = Line Voltage
F = Line Frequency

NOTE: All adjustments are factory preset to values in the table above, unless otherwise specified by the user.

Katolight Service - Master Repair Manual - Page 4465

Timer Adjustments

P Timer (delay to engine start). Time delay before engine start after Normal voltage failure: adjustable 0 to 10 seconds. P timer is designed to avoid engine starts on momentary Normal source failures. Standard factory setting is 3 seconds.

W Timer (delay to Emergency or delay to open Normal timer). Time delay before initiating transfer to Emergency: adjustable 0 to 15 seconds. Standard factory setting is 1 second. After the successful acquisition of correct Emergency voltage and frequency, the W timer function provides a time delay before initiating transfer to Emergency. This permits the Emergency source to stabilize. On completion of the time out, transfer to Emergency is initiated.

Transfer to Emergency is non-commit. This means that should the Normal voltage be restored before the timeout of the W timer, the ATS will remain in the Normal position and initiate the delay to engine stop timer.

T Timer (delay to Normal or delay to open Emergency). Time delay before initiating retransfer to Normal: adjustable 0 to 30 minutes. Standard factory setting is 30 minutes. On return of acceptable Normal voltage the time delay is initiated. T time delay ensures Normal source has stabilized before transferring to Normal position. On completion of the time out, transfer to Normal is initiated. Should Emergency power fail when the ATS is in the Emergency position, the T timer function will be bypassed when normal power is restored.

U Timer (delay engine stop). Time delay to engine stop, after retransfer to Normal, for purpose of cooling the engine after the load is removed: adjustable 0 to 5 minutes. Standard factory setting is 5 minutes.

DW Timer (time delay from Open position to Emergency position). Delayed Transition Transfer only: adjustable 0 to 30 seconds. Standard factory setting is 5 seconds. DW timer activates when the switch enters open position on a transfer from Normal to Emergency. After time out, the transfer to Emergency is complete.

DT Timer (time delay from Open position to Normal position). Delayed Transition Transfer only: adjustable 0 to 30 seconds. Standard factory setting is 5 seconds. DT timer activates when the switch enters the open position on transfer from Emergency to Normal. After time out, the transfer to Normal is complete.

MX100, Standard Transition w/A6 or T3/W3 (A6 = motor load disconnect circuit) (T3/W3 = elevator presignal circuit)

TA5 (presignal time delay to normal). Time delay is available only on standard transition ATSs specifically configured with the presignal circuit. Adjustable 0 to 30 seconds. Standard factory setting is 5 seconds.

TA6 (presignal time delay to emergency). Time delay is available only on standard transition ATSs specifically configured with the presignal circuit. Adjustable 0 to 30 seconds. Standard factory setting is 5 seconds.

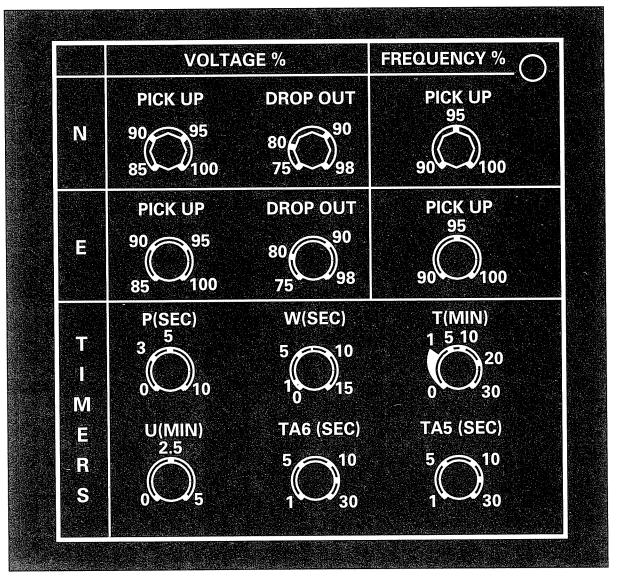

Figure 8 - Standard Transition w/A6 or T3/W3 User Adjustments

Katolight Service - Master Repair Manual - Page 4466

Maintenance and Testing

⚠ CAUTION ⚠

Due to hazardous voltage and current, GE Zenith recommends that a GE Zenith Certified technician or a qualified electrician must perform the installation and maintenance of the switch.

⚠ WARNING ⚠

Both power sources must be disconnected before manual operation of the switch.

A preventive maintenance program will insure high reliability and long life for the transfer switch. The preventive maintenance program for the transfer switch should include the following items:

Inspection and Cleaning

The switch should be inspected for any accumulation of dust, dirt, or moisture, and should be cleaned by vacuuming or wiping with a dry cloth or soft brush. do not use a blower since debris may become lodged in the electrical and mechanical components and cause damage.

Remove the transfer switch barriers and check the condition of the contacts. Any surface deposits must be removed with a clean cloth (do not use emery cloth or a file). If the contacts are pitted or worn excessively, they should be replaced. A general inspection of mechanical integrity should be made to include loose, broken or badly worn parts.

Servicing

All worn or inoperative parts must be replaced using GE Zenith recommended replacement parts. Please refer to the Replacement Parts manual for specific part information and ordering procedures. Please contact the GE Zenith Technical Services Department for the Replacement Parts manual.

The operating mechanism of the transfer switch is lubricated with Lubriplate 105. The lubricant applied at the factory provides adequate lubrication for the lifetime of the switch. Should debris contaminate the mechanism, clean and apply additional Lubriplate.

GE Zenith can provide complete preventative maintenance services. Please contact the GE Zenith Technical Services Department for additional information.

Testing

A manual operator handle is provided with the transfer switch for maintenance purposes only. Manual operation of the switch must be checked before it is operated electrically. **Both power sources must be disconnected before manual operation of the switch.** Insert the handle and operate the transfer switch between the Normal and Emergency positions. The transfer switch should operate smoothly without binding. Return the switch to the Normal position, remove the handle, and return it to the holder provided.

After completing the inspection, cleaning and servicing of the transfer switch, reinstall the switch cover, and close and lock the cabinet door. Reclose the circuit breakers feeding the utility and generator sources to the switch.

Initiate the electrical transfer test by activating the TS test switch. P timer will time out and the micro-controller will send an engine start signal. When the W time has elapsed, the switch will complete its transfer by closing into the Emergency source.

Deactivating the test switch will start retransfer to the Normal source. The switch will complete its retransfer to Normal after the time delay of the T timer. The U engine overrun timer allows the engine generator to run unloaded for a preset cool down period.

NOTE: A periodic test of the transfer switch under load conditions is recommended to insure proper operation. (See National Electric Code articles 700 and 701).

⚠ WARNING ⚠

When performing a hi-pot or dielectric test on the power section, DISCONNECT the control panel plugs from the microprocessor to avoid potential damage.

Katolight Service - Master Repair Manual - Page 4467

Troubleshooting and Diagnostics

⚠ DANGER ⚠

HAZARDOUS VOLTAGES CAN CAUSE SEVERE INJURY OR DEATH.
These charts may indicate problems that require authorized GE Zenith service personnel.
Hazardous voltages may exist on termination plugs other than those that go into the MX100.

General Troubleshooting

The following troubleshooting guide is used to recognize, and determine basic faults. When using this guide, it will ask several questions about the condition of the switch. This guide will then list an order of the possible faults. You will then look at the first suspected fault to determine if it is the problem. If it is not a fault, you go to the second suspected fault. If you go through all of the suspected faults, or the chart instructs you to, call a GE Zenith Representative for further assistance.

NOTE: When you use the troubleshooting charts, the Annunciation column refers to the LED's on the control panel.

Symptom	Annunciation	Possible Cause(s)	Corrective Action
No engine start	EMERGENCY AVAILABLE LED off	Engine start wires not properly connected	Check engine start connections (Figure 2).
		Generator is in OFF position	Place Engine Control Switch in AUTO.
No engine stop	DELAY TO ENGINE STOP LED on	U timing cycle not complete	Check U timer setting.
	NORMAL AVAILABLE, NORMAL POSITION, and EMERGENCY AVAILABLE LEDs on	Engine start wires not properly connected	Check engine start connections (Figure 2).
		Generator in MANUAL	Place Engine Control Switch in AUTO.
ATS will not transfer to EMERGENCY	EMERGENCY AVAILABLE LED off	Emergency voltage or frequency not within settings	Check: engine start connections, generator breaker closed, generator output (compare to MX100 settings) and place engine control switch in AUTO.
	All LEDs off	Power supply harness unplugged (18 pin connector on MX100)	Plug in harness.
	NORMAL POSITION and EMERGENCY POSITION flashing	Limit switch harness unplugged	Plug in harness.
	DELAY TO OPEN NORMAL LED on	**W** timing cycle not complete	Check **W** Timer setting.
ATS will not transfer to NORMAL	NORMAL AVAILABLE LED off	Normal voltage or frequency not within acceptable parameters	Check: normal voltage within MX100 settings; verify Normal breaker source breaker is closed.
	All LEDs off	Power supply harness unplugged (18 pin connector on MX100)	Plug in harness.
	NORMAL POSITION and EMERGENCY POSITION LEDs flashing	Limit switch harness unplugged	Plug in harness.
	DELAY TO OPEN EMERGENCY LED on	**T** timing cycle not complete	Check **T** Timer setting.
Improper LED annunciation	Neither source available LEDs illuminate, position LED only	MX100 PC board may be configured for wrong frequency (60 Hz vs. 50 Hz)	1. Verify source voltage and frequency. 2. Consult GE Zenith Controls for information to reconfigure hardware.
	NORMAL and/or EMERGENCY AVAILABLE LEDs on when frequency is below the present pick up value	MX100 PC board may be configured for wrong frequency (60 Hz vs. 50 Hz)	1. Verify source voltage and frequency. 2. Consult GE Zenith Controls for information to reconfigure hardware.

Katolight Service - Master Repair Manual - Page 4468

Diagnostic Annunciation

The MX100 controller incorporates diagnostics that allows ease of troubleshooting. Diagnostic annunciations are flashing position LEDs. The symptoms that the diagnostic annunciation indicate include inhibiting transfer or incorrect transfer sequence. A more general troubleshooting chart that addresses system problems precedes these charts.

⚠ DANGER ⚠

HAZARDOUS VOLTAGES CAN CAUSE SEVERE INJURY OR DEATH.

These charts may indicate problems that require authorized GE Zenith service personnel.

Hazardous voltages may exist on termination plugs other than those that go into the MX100.

Standard Transition ATS

(Two Position ATS—Normal and Emergency)
(Not for Standard Transition w/A6)

⚠ WARNING ⚠

If limit switch plug is disconnected or reconnected and power is available, the switch may transfer.

Use caution when servicing.

Symptom	Annunciation	Possible Cause(s)	Corrective Action
ATS will not transfer out of Normal	Flashing NORMAL POSITION LED	Solenoid circuit	Contact authorized GE Zenith service representative.
ATS will not transfer out of Emergency	Flashing EMERGENCY POSITION LED	Solenoid circuit	Contact authorized GE Zenith service representative.
ATS will not transfer; ATS is not in a defined position as indicated by the limit switch contact (no SN or SE limit switch input)	Flashing NORMAL POSITION and EMERGENCY POSITION LEDs	1. Limit switch plugs not connected 2. Limit switches not within adjustment	1. Connect all plugs to the MX100. 2. Contact authorized GE Zenith service representative.

Katolight Service - Master Repair Manual - Page 4469

Troubleshooting and Diagnostics *(cont'd)*

Delayed Transition ATS

(Three Position ATS—Normal, Open and Emergency)

⚠ WARNING ⚠

If limit switch plug is disconnected or reconnected and power is available, the switch may transfer.

Use caution when servicing.

Symptom	Annunciation	Possible Cause(s)	Corrective Action
ATS will not transfer out of Normal	Flashing NORMAL POSITION LED	Solenoid circuit	Put ZTG in AUTO. Disconnect and reconnect MX100 18 pin plug. Contact authorized GE Zenith service representative.
ATS will not transfer out of Emergency	Flashing EMERGENCY POSITION LED	Solenoid circuit	Put ZTG in AUTO. Disconnect and reconnect MX100 18 pin plug. Contact authorized GE Zenith service representative.
ATS will not transfer out of Open position	Flashing OPEN POSITION LED	Solenoid circuit	Put ZTG in AUTO (ref. ZTC Power Panel Manual 51R-1000). Disconnect and reconnect MX100 18 pin plug. Contact authorized GE Zenith service representative.
ATS is not in a defined position as indicated by the limit switch contacts (no SN or SNO limit switch inputs)	Flashing NORMAL POSITION and OPEN POSITION LEDs	Limit switches not registered as opened or closed	Contact authorized GE Zenith service representative.
ATS is not in a defined position as indicated by the limit switch contacts (no SN or SEO limit switch inputs)	Flashing EMERGENCY POSITION and OPEN POSITION LEDs	Limit switches not registered as opened or closed	Contact authorized GE Zenith service representative.
ATS is not in a defined position as indicated by the limit switch contacts (no SN, SE, SNO, or SEO limit switch inputs)	Flashing NORMAL POSITION, OPEN POSITION and EMERGENCY POSITION LEDs	1. Limit switch plugs not connected 2. Limit switches not registered as opened or closed	Connect all plugs to the MX100.

Katolight Service - Master Repair Manual - Page 4470

Standard Transition ATS (with A6)

⚠ WARNING ⚠

If limit switch plug is disconnected or reconnected and power is available, the switch may transfer.

Use caution when servicing.

Symptom	Annunciation	Possible Cause(s)	Corrective Action
ATS will not transfer out of Normal; motor load still connected	Flashing NORMAL POSITION LED	Motor load disconnect relay is not latching	Check connections to RA6 relay.
ATS will not transfer out of Emergency; motor load still connected	Flashing EMERGENCY POSITION LED	Motor load disconnect relay is latched	Check connections to RA6 relay.
ATS will not transfer after motor load disconnect operated	Flashing MOTOR CONTROL OFF LED	Solenoid circuit	Contact authorized GE Zenith service representative.
ATS is not in a defined position as indicated by the limit switch contacts (no SN or RA6 limit switch inputs)	Flashing NORMAL POSITION and MOTOR CONTROL OFF LEDs	Limit switches not registered as closed or RA6 contact is not registered	Contact authorized GE Zenith service representative.
ATS is not in a defined position as indicated by the limit switch contacts (no SE or RA6 limit switch inputs)	Flashing EMERGENCY POSITION and MOTOR CONTROL OFF LEDs	Limit switches not registered as closed or RA6 contact is not registered	Contact authorized GE Zenith service representative.
ATS is not in a defined position as indicated by the limit switch contacts (no SN, SE, SNO, or SEO limit switch inputs)	Flashing NORMAL POSITION, OPEN POSITION and EMERGENCY POSITION LEDs	1. Limit switch plugs not connected 2. Limit switches not registered as opened or closed	Connect all plugs to the MX100.

Katolight Service - Master Repair Manual - Page 4471

Power Panel — 40 to 260 Amps Linear Actuator Type

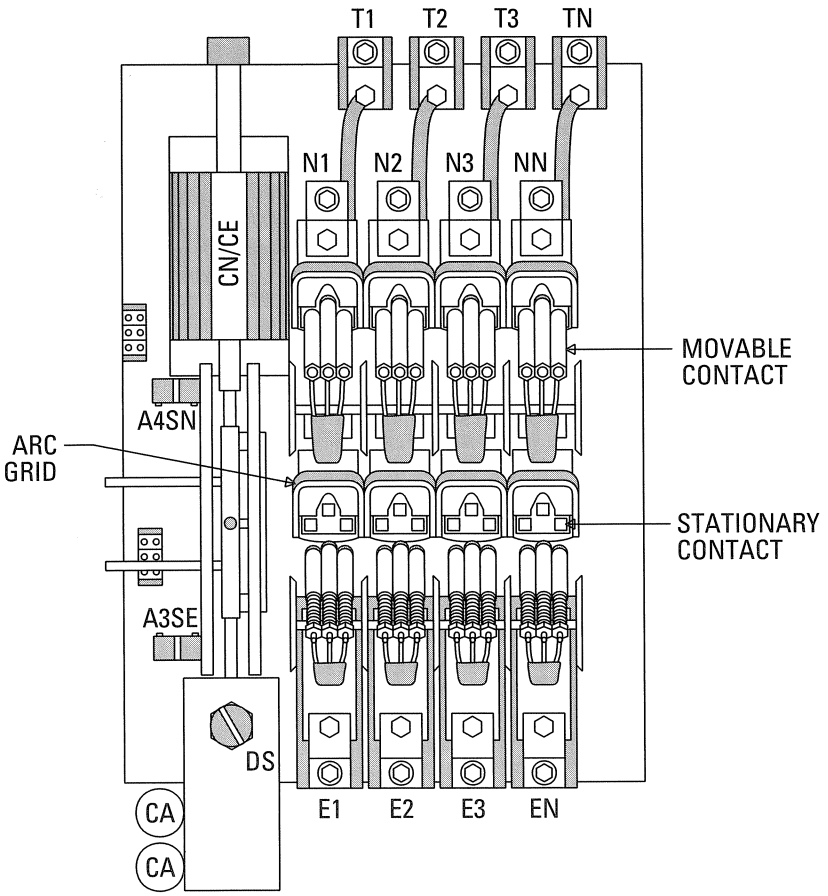

Tag	Description	Recommended as Spares	Stock Numbers by Amperage					
			40	80	100	150	225	260
N 1,2,3, N E 1,2,3, N T 1,2,3, N	Cable Connection Lug		PS-4419	PS-4423	PS-4423	27P-1128	27P-1126	27P-1127
	Wire Size		#14-2	#14-1/0	#14-1/0	#8-3/0	#6 to 250 MCM	#6 to 350 MCM
	Stationary Contact Assembly Kit		27P-1141	27P-1141	27P-1141	27P-1111	27P-1111	27P-1111
	Stationary Load Contact Assembly Kit		27P-1140	27P-1140	27P-1140	27P-1109	27P-1109	27P-1109
	Arc Grid Assembly Kit		27P-1142	27P-1142	27P-1142	27P-1142	27P-1142	27P-1142
	Movable Contact Assembly Kit		27P-1036	27P-1036	27P-1036	27P-1037	27P-1037	27P-1037
CN/CE, CA	Linear Actuator and Capacitors	*				CA (See Note)		
	Note: 2S denotes two capacitors wired in series		Coil Volts	Poles	CN/CE	Quantity	Part	mf
			120	2	K-2104PN	1	PS-4007	340-408
			240	2	K-2105PN	1	PS-4016	108-130
				3				
			208	3	K-2141PN	1	PS-4084	145-174
				4	K-2142PN	1	PS-4084	145-174
			575/600	3	K-2198PN	2S	PS-4083	36-43
				4	K-2197PN	2S	PS-4083	36-43
			480	3	K-2119PN	2S	PS-4008	72-86
				4	K-2111PN	2S	PS-4008	72-86
			416	3	K-2190PN	2S	PS-4008	72-86
SN	CN1 Cut-out Switch		L-5022					
SE	CE1 Cut-out Switch		L-5022					
A3	Emergency Position Auxiliary Contact		SPDT, L-5022; DPDT, L-5021					
A4	Normal Position Auxiliary Contact		SPDT, L-5022; DPDT, L-5021					
DS	Disconnect Switch (older versions)	*	Operator L-4018; Contact Block L-1028					

Katolight Service - Master Repair Manual - Page 4472

Power Panel — 40 to 225 Amps Solenoid Type

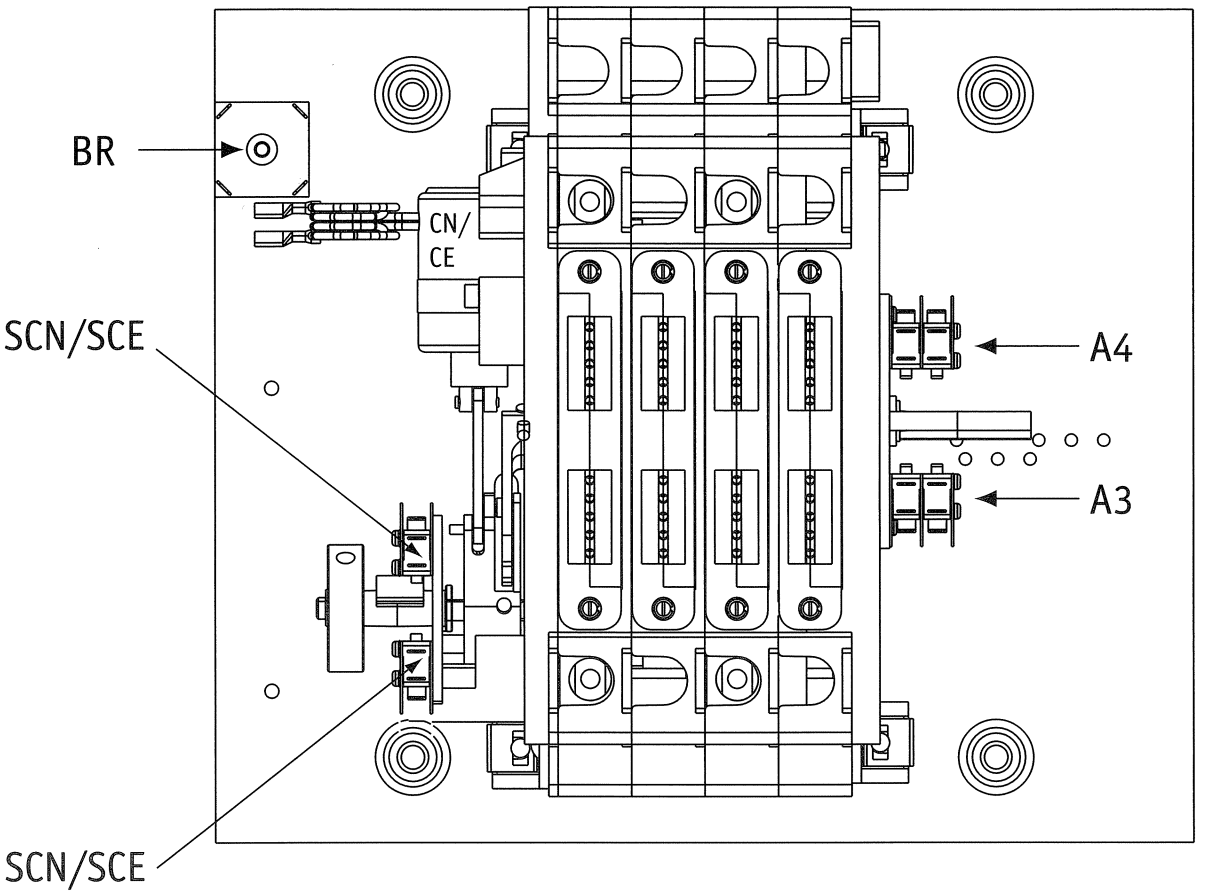

Tag	Description	Recommended as Spares	40 to 225 Amps	
CN/CE	Solenoid	*	120	K-2207
			208	K-2208
			220	K-2208
			240	K-2228
			277	K-2211
			380/416	K-2212
			440/480	K-2209
			575/600	K-2213
	Solenoid Plunger and Link	*	ALL	57P-1030
SCN/SCE	Coil Cutout Switch		120-480V	L-3078
SCN/SCE	Coil Cutout Switch		600V	L-4027
BR	Rectifier	*	ALL	PS-5152
A3/A4	Auxiliary Contacts			L-3078

Katolight Service - Master Repair Manual - Page 4473

Power Panel — 225 to 400 Amps Molded Type

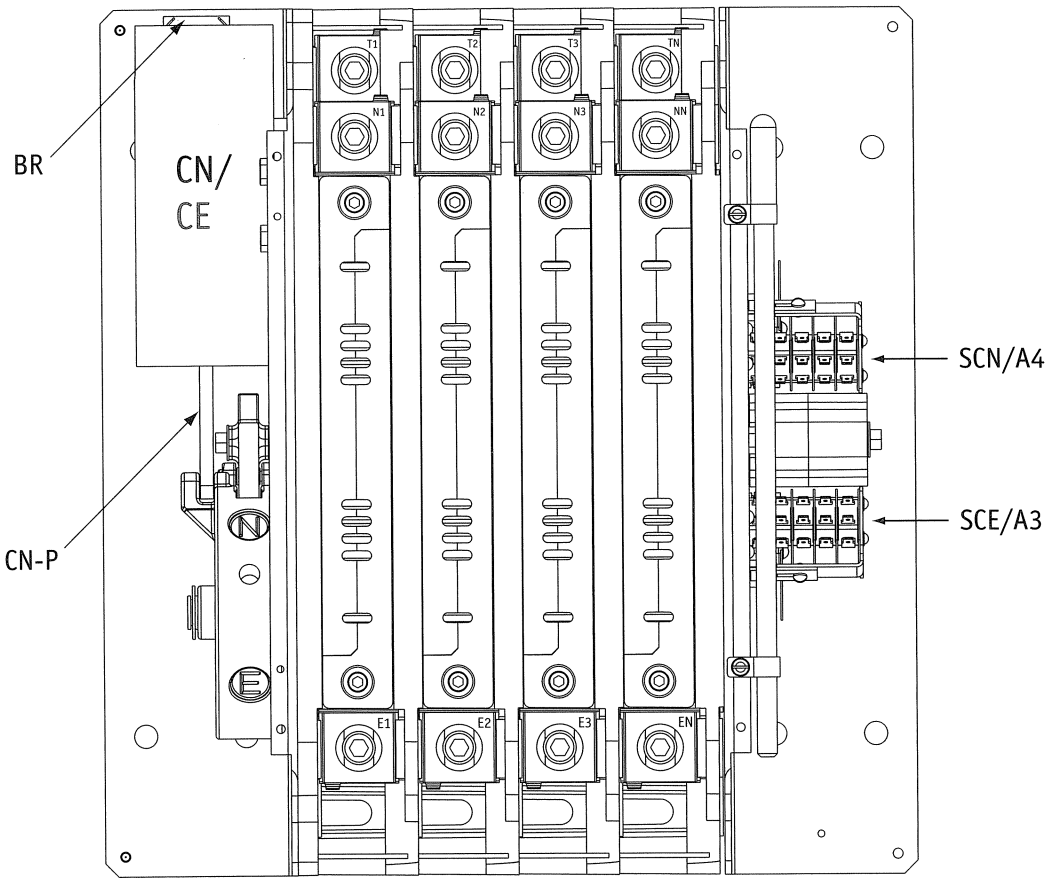

Tag	Description	Recommended as Spares	Stock		
			225, 250*	260, 300*	400
N 1,2,3 N E 1,2,3 N T 1,2,3 N	Cable Connection Lug		S-2701	S-2701	S-2701
	Wire Size			#4-600 MCM	#4-600 MCM
			Coil Volts		
CN/CE	Solenoid	*	120	K-2229	
			208/220	K-2230	
			240	K-2231	
			277	K-2232	
			380/416	K-2233	
			440/480	K-2234	
			575/600	K-2235	
CN-P	Solenoid Plunger and Link	*	58P-1029		
SCN/SCE	Coil Cutout Switches		L-3079		
A3/A4	Auxiliary Contacts		L-3078		
BR	Rectifier	*	PS-5152		

* IEC ratings only

Katolight Service - Master Repair Manual - Page 4474

Power Panel — 400 Amps Metal Frame Type

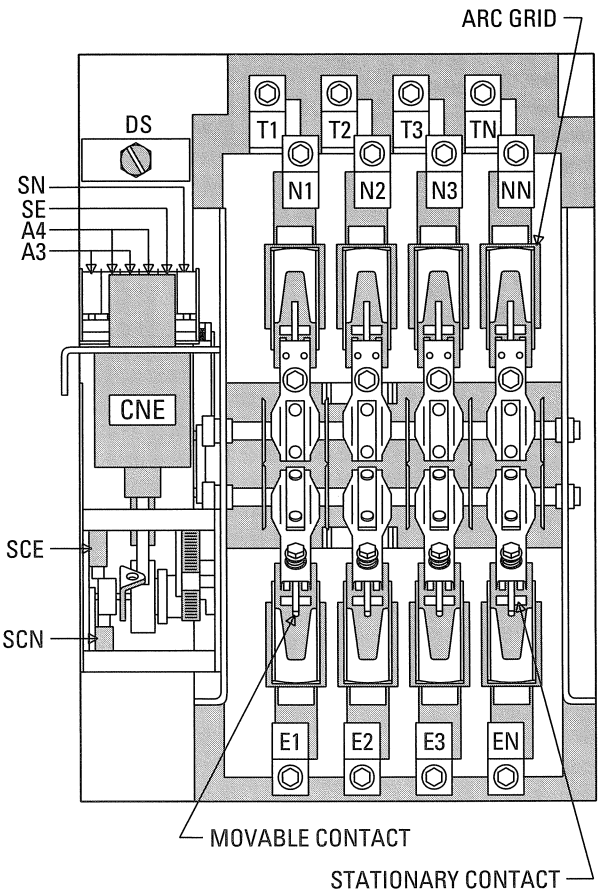

Tag	Description			Recommended as Spares	Part Number
					400
N 1,2,3, N E 1,2,3, N T 1,2,3, N	Normal	Cable Connection Lugs #4-600 MCM			PS-1815F
	Emergency				
	Load				PS-1815
	Normal Side Line Contact Kit				46P-1100E
	Normal Side Neutral Contact Kit				46P-1101E
	Emergency Side Line Contact Kit				46P-1102E
	Emergency Side Neutral Contact Kit				46P-1103E
	Arc Chute and Runner				46P-1140
CNE	Main ATS Operating Coils	Coil Volts	Poles	*	
		120	2		K-2178
		240	2,3,4		K-2189
		208	2,3,4		K-2177
		575/600	2,3,4		K-2196
		480	2,3,4		K-2176
		416	2,3,4		K-2188
		380	2,3,4		K-2188
SN	CN1 Limit Switch				L-5021
SE	CE1 Limit Switch				
A3	ATS Emergency Position Switch				
A4	ATS Normal Position Switch				
SCN/SCE	CNE Limit Switches				L-3079
DS	ATS Solenoid Disconnect Switch				
	Operator 2 – Position Maintain				L-4018
	Contact Block N.C. (1)			*	L-1029
BR	Rectifier			*	PS-5152

Katolight Service - Master Repair Manual - Page 4475

Power Panel — 600 to 1200 Amps

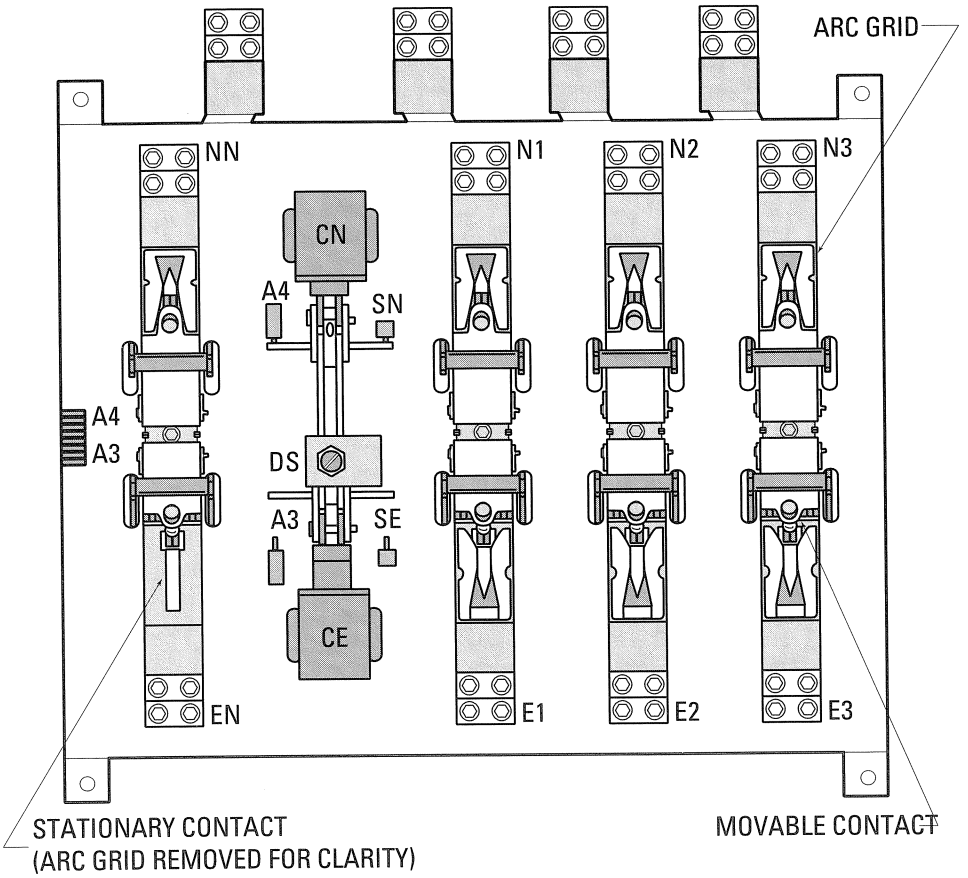

Tag	Description	Coil Volts	Poles	Recommended as Spares	Stock Numbers by Amperage 600	800	1000	1200
N 1,2,3, N E 1,2,3, N T 1,2,3, N	Cable Connection Lug				S1393F (2)	S1392F (4)	S1392F (4)	S1392F (4)
	Wire Size				#2-600 MCM	#2-600 MCM	#2-600 MCM	#2-600 MCM
	Stationary Contact Assembly Kit				Consult Factory			
	Arc Grid Assembly Kit				23P-1366			
	Movable Contact Assembly Kit				Consult Factory			
CN/CE	Main Operating Coils	Coil Volts	Poles	*				
		120	2		K-2090F	K-2073F	K-2073F	K-2073F
		240	2		K-2092F	K-2070F	K-2070F	K-2070F
			3		K-2078F	K-2070F	K-2070F	K-2070F
			4		K-2091F	K-2074F	K-2074F	K-2074F
		208	3,4		K-2091F	K-2074F	K-2074F	K-2074F
		575/600	3		K-2095F	K-2095F	K-2155F	K-2155F
			4		K-2094	K-2094	K-2155F	K-2155F
		480	3		K-2080F	K-2071F	K-2071F	K-2071F
			4		K-2079F	K-2071F	K-2071F	K-2071F
		416	3		K-2080F	K-2071F	K-2071F	K-2071F
SN	CCN Cutout Switch		23P-1333		23P-1333			
SE	CCE Cutout Switch		23P-1327		23P-1327	23P-1452		
A3	Emergency Position Auxiliary Contact		(Qty 1) 23P-1327 (Qty 2) 23P-1328 (Qty 3) 23P-1334 (Qty 4) 23P-1336					
A4	Normal Position Auxiliary Contact		(Qty 1) 23P-1333 (Qty 2) 23P-1334 (Qty 3) 23P-1328 (Qty 4) 23P-1330					
DS	Disconnect Switch (older versions)		Operator L-4009; Contact Block L-1020	*	Operator L-4009; Contact Block L-1020			

Katolight Service - Master Repair Manual - Page 4476

Power Panel — 1600 to 3000 Amps

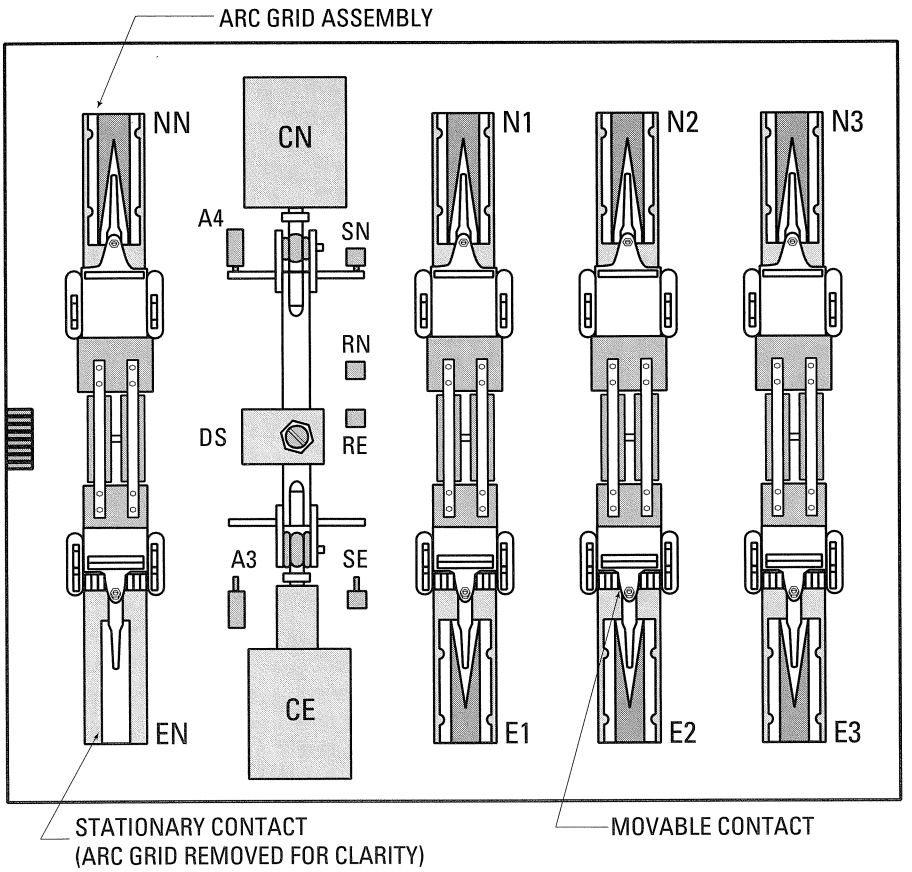

Tag	Description			Recommended as Spares	Stock Numbers by Amperage		
					1600	2000	3000
N 1,2,3 E 1,2,3 T 1,2,3	Cable Connection Lug				S1126F (2) Optional	S1126F (2) Optional	S1126F (2) Optional
	Wire Size				(8) #2-600 MCM	(8) #2-600 MCM	(8) #2-600 MCM
	Stationary Contact Assembly Kit				23P-1587	23P-1587	23P-1618
	Arc Grid Assembly Kit				23P-1171	23P-1171	23P-1171
	Movable Contact Assembly Kit				23P-1400	23P-1400	23P-1400
CN/CE	Main Operating Coils	**Coil Volts**	**Poles**	*			
		120	2		SPO	SPO	SPO
		240	2,3		K-2123	K-2123	K-2123
			4		K-2127	K-2127	K-2127
		208	3		K-2125	K-2125	K-2125
			4		K-2128	K-2128	K-2128
		575/600	3		K-2153	K-2153	K-2153
			4		K-2154	K-2154	K-2154
		480	3		K-2120	K-2120	K-2120
			4		K-2130	K-2130	K-2130
		416	3		K-2126	K-2126	K-2126
SN	CCN Cutout Switch		23P-1352		23P-1352		
SE	CCE Cutout Switch		23P-1356		23P-1356		
A3	Emergency Position Auxiliary Contact		(Qty 1) 23P-1356 (Qty 2) 23P-1357 (Qty 3) 23P-1353 (Qty 4) 23P-1355				
A4	Normal Position Emergency Contact		(Qty 1) 23P-1352 (Qty 2) 23P-1353 (Qty 3) 23P-1357 (Qty 4) 23P-1359				
DS	Disconnect Switch (older version)		Operator L-4009; Contact Block L-1020	*	Operator L-4009; Contact Block L-1020		
RN, RE	Rectifier		PS-5151 (Up to 240V); PS-5151 (Up to 600V)	*	PS-5151 (Up to 240V); PS-5151 (Up to 600V)		

Katolight Service - Master Repair Manual - Page 4477

Delayed Transition — 40 to 260 Amps

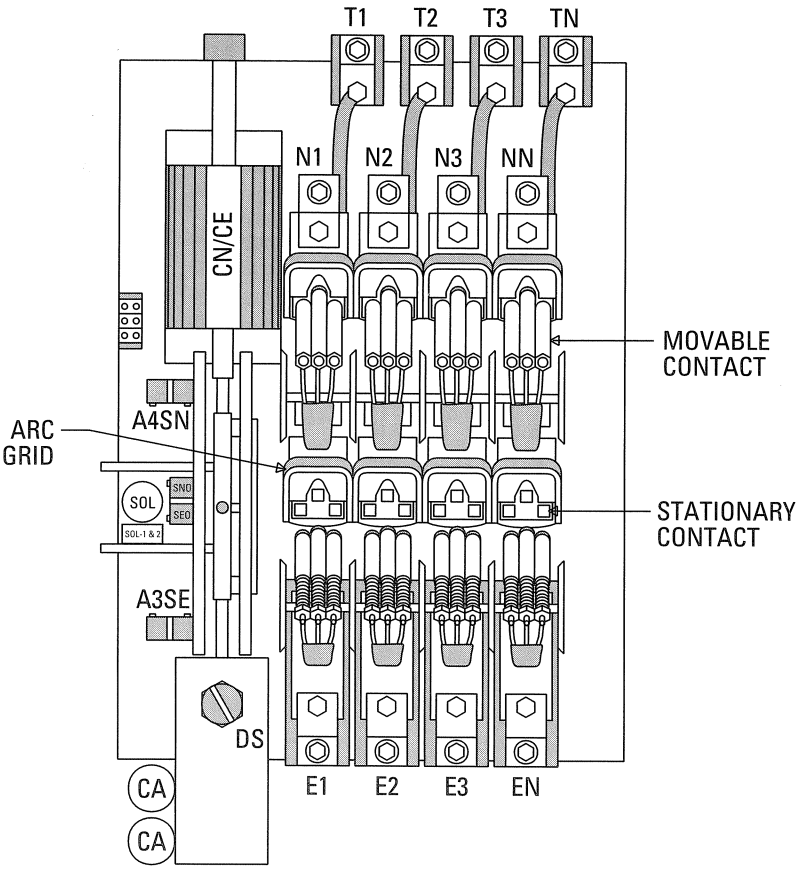

Tag	Description	Recommended as Spares	Stock Numbers by Amperage					
			40	80	100	150	225	260
N 1,2,3, N E 1,2,3, N T 1,2,3, N	Cable Connection Lug		PS-4419	PS-4423	PS-4423	27P-1128	27P-1126	27P-1127
	Wire Size		#14-2	#14-1/0	#14-1/0	#8-3/0	#6 to 250 MCM	#6 to 350 MCM
	Stationary Contact Assembly Kit		27P-1141	27P-1141	27P-1141	27P-1111	27P-1111	27P-1111
	Stationary Load Contact Assembly Kit		27P-1140	27P-1140	27P-1140	27P-1109	27P-1109	27P-1109
	Arc Grid Assembly Kit		27P-1142	27P-1142	27P-1142	27P-1142	27P-1142	27P-1142
	Movable Contact Assembly Kit		27P-1036	27P-1036	27P-1036	27P-1037	27P-1037	27P-1037
CN/CE, CA	Linear Actuator and Capacitors	*				CA (See Note)		
	Note: 2S denotes two capacitors wired in series		Coil Volts	Poles	CN/CE	Quantity	Part	mf
			120	2	K-2104PN	1	PS-4007	340-408
			240	2	K-2105PN	1	PS-4016	108-130
				3				
			208	3	K-2141PN	1	PS-4084	145-174
				4	K-2142PN	1	PS-4084	145-174
			575/600	3	K-2198PN	2S	PS-4083	36-43
				4	K-2197PN	2S	PS-4083	36-43
			480	3	K-2119PN	2S	PS-4008	72-86
				4	K-2111PN	2S	PS-4008	72-86
			416	3	K-2190PN	2S	PS-4008	72-86
SN	CN1 Cut-out Switch		L-5022					
SE	CE1 Cut-out Switch		L-5022					
A3	Emergency Position Auxiliary Contact		SPDT, L-5022; DPDT, L-5021					
A4	Normal Position Auxiliary Contact		SPDT, L-5022; DPDT, L-5021					
DS	Disconnect Switch (older version)		Operator L-4018; Contact Block L-1028					
SOL	Center Position Solenoid		K-2204					

Katolight Service - Master Repair Manual - Page 4478

Delayed Transition — 400 Amps

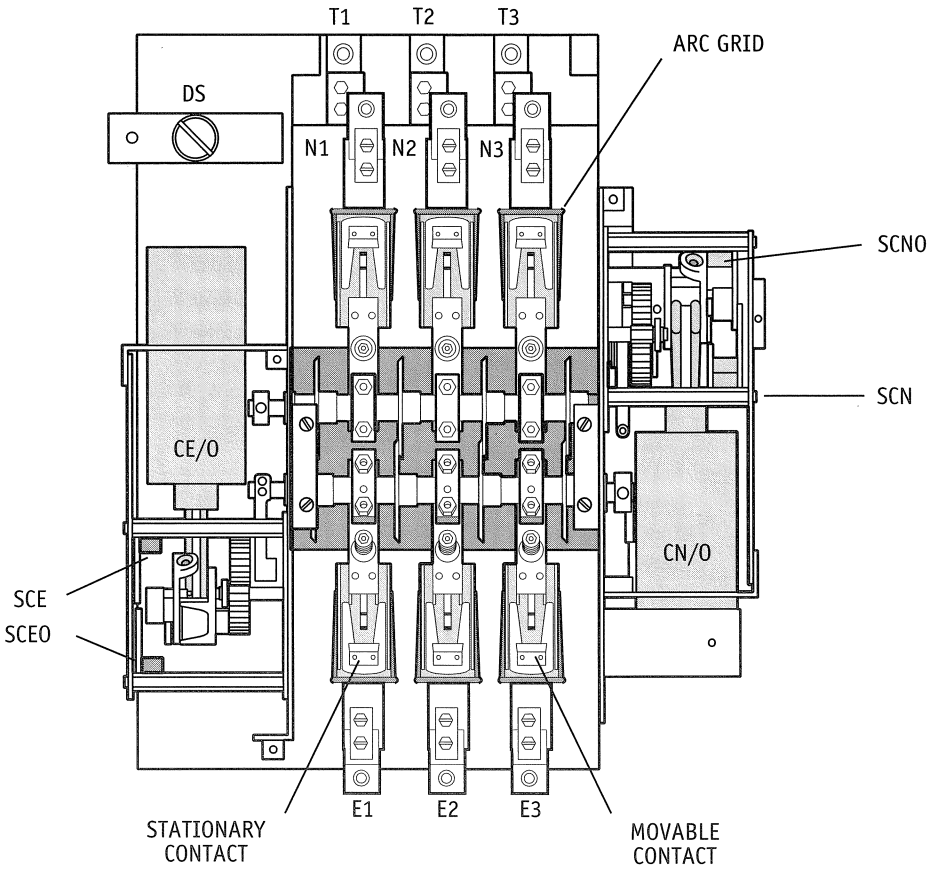

Tag	Description	Recommended as Spares	Stock Numbers by Amperage
			400
NL 1,2,3 EL 1,2,3 T 1,2,3 NLN,ELN,TN	Cable Connection Lug, CU Wire		S-1422
NL 1,2,3	Movable and Stationary Contact Assembly (For 3P Units)		46P-1100E
NLN			46P-1101E
EL 1,2,3			46P-1102E
ELN			46P-1103E
	Arc Grid Assembly Kit		46P-1099
RTN/RTE	Coil Rectifier	*	PS-5152
SCN/SCNO	Sol Limit Switch		L-3079
SCE/SCE	Sol Limit Switch		L-3079
SN/SNO	Emergency Position Contact		46P-1133
SE/SEO	Normal Position Contact		46P-1133
DS	Disconnect Switch	*	Operator: L-4018; Contact Block: L-1029
CN/CNO CE/CEO	Main Operator Solenoids	*	**See Chart Below**

Voltage System					Solenoid Part No. VDC
Volts	Ph	Wire	Coil VDC	Pole	
240	3	3	240	3	K-2189
120/208	3	4	208	3,4	K-2177
480	3	3	480	3	K-2176
277/480	3	4	480	3,4	K-2176
240/416	3	4	416	3	Consult Factory

Katolight Service - Master Repair Manual - Page 4479

Delayed Transition — 600 to 1200 Amps

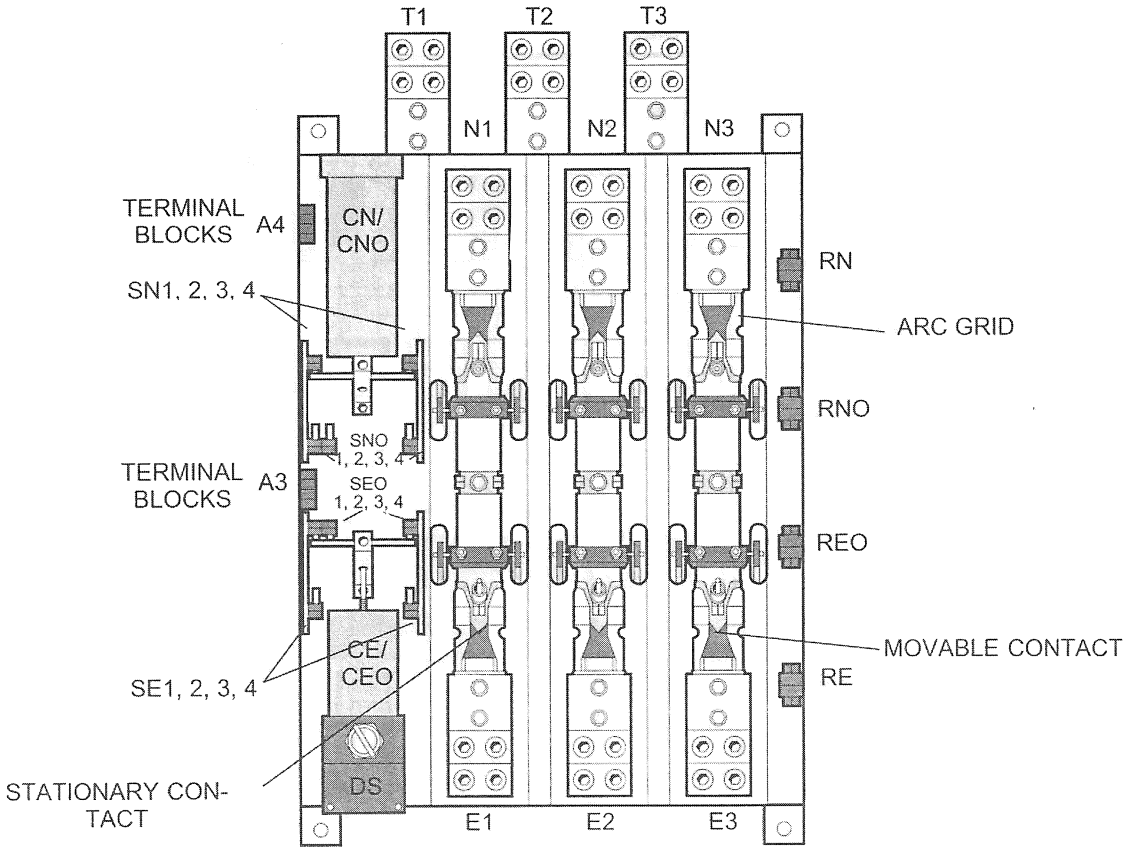

Tag	Description	Recommended as Spares	Stock Numbers by Amperage	
			600	800-1200
NL 1,2,3 EL 1,2,3 T 1,2,3 NN, EN, TN	Cable Connection Lug, CU Wire		S-1393F (2) 600MCM-2	S-1392F (4) 600MCM-2
	Stationary Contact Assembly Kit		23P-1471	26P-1336
	Arc Grid Assembly Kit		23P-1366	23P-1366
	Movable Contact Assembly Kit		23P-1469	26P-1334
	Movable Contact		23P-1470	26P-1335
RN/RNO RE/REO	Coil Rectifier	*	PS-5151 (Up to 240 VAC) PS-5151 (Up to 600 VAC)	
SN/SNO	Limit Switch		23P-1535(L); 23P-1533(R)	
SE/SEO	Limit Switch		23P-1536(L); 23P-1534(R)	
A3	Emergency Position Auxiliary Contact		23P-1536	
A4	Normal Position Auxiliary Contact		23P-1535	
DS	Disconnect Switch	*	Operator: L-4009; Contact Block: L-1020	
CN/CNO CE/CEO	Main Operator Solenoids	*	See Chart Below	

Voltage System					Solenoid Part No.	
Volts	Ph	Wire	Coil VDC	Pole	600	800-1200
240	3	3	240	3	K-2146	K-2147
120/208	3	4	208	3,4	K-2146	K-2147
480	3	3	480	3	K-2158	K-2157
277/480	3	4	480	3,4	K-2158	K-2157
240/416	3	4	416	3	Consult Factory	

Katolight Service - Master Repair Manual - Page 4480

Delayed Transition — 1600 to 3000 Amps

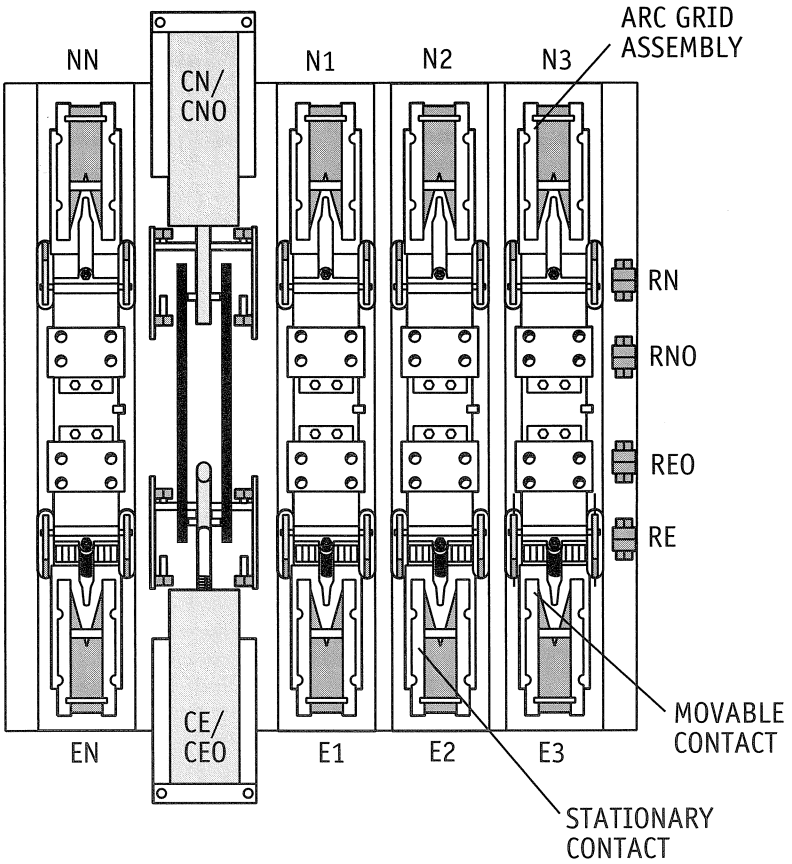

Tag	Description	Recommended as Spares	Stock Numbers by Amperage		
			1600	2000	3000
N 1,2,3 E 1,2,3 T 1,2,3 NLN,ELN	Cable Connection Lug, CU Wire		S-1126F(2) Optional (8) 600MCM-2		
	Stationary Contact Assembly Kit		23P-1587	23P-1587	23P-1618
	Arc Grid Assembly Kit		23P-1171	23P-1171	23P-1171
	Movable Contact Assembly Kit		23P-1400	23P-1400	23P-1344
CN/CNO CE/CEO	Main Operator Solenoids	*	See Chart Below		

Voltage System					Solenoid Part No.		
Volts	Ph	Wire	Coil VDC	Pole			
120	1	2	120	2	S.P.O.	S.P.O.	S.P.O.
120/240	1	3	240	2,3	K-2151	K-2151	K-2151
240	3	3	240	3	K-2151	K-2151	K-2151
120/208	3	4	208	3,4	K-2151	K-2151	K-2151
480	3	3	480	3	K-2160	K-2160	K-2160
575	3	3	575/600	3	S.P.O.	S.P.O.	S.P.O.
277/480	3	4	480	3,4	K-2160	K-2160	K-2160
120/240	2	4	240	4	K-2151	K-2151	K-2151
240/416	3	4	416	3	Consult Factory		
Operating Coil Hardware Kit							
SN/SNO-1,2		Switch Bracket Assembly			23P-1540	23P-1540	23P-1540
SE/SEO-1,2		Switch Bracket Assembly			23P-1541	23P-1541	23P-1541
SN/SNO-3,4		Switch Bracket Assembly			23P-1542	23P-1542	23P-1542
SE/SEO-3,4		Switch Bracket Assembly			23P-1543	23P-1543	23P-1543

Katolight Service - Master Repair Manual - Page 4481

Relay/Transformer Box (R/T Box)

Each MX100 microprocessor based ATS controller requires a relay/transformer box to apply line voltage to the ATS operator via coil control relays. Also required is a means to power the MX100 printed circuit board and a means to apply sensing voltage proportional to line voltage. This is accomplished by the relay transformer box. This method of switching operator voltage and applying power and sensing voltage to the printed circuit board isolates the MX100 from the line voltage, further protecting the controller from harmful line transients. Two versions of the R/T box exist depending on the type of ATS (standard transition or delayed transition).

The following layout drawings of the R/T box components (standard and delayed transition) include a bill of materials for replacement parts. Schematics are included to indicate proper wiring.

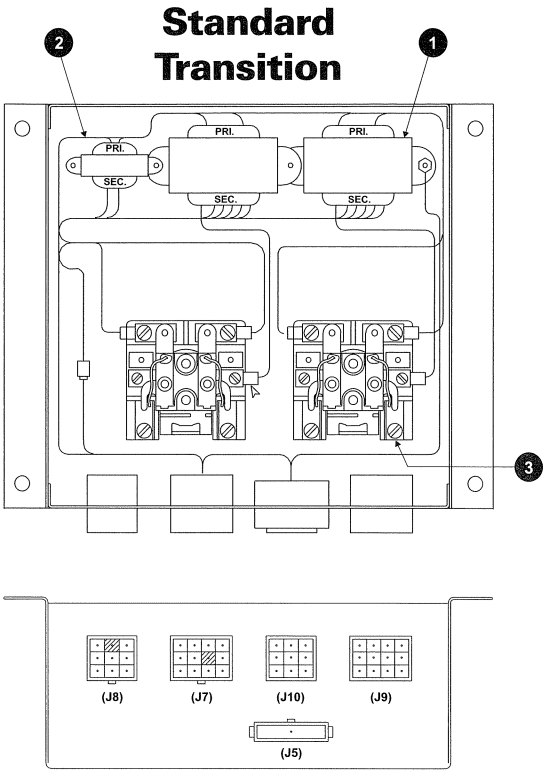

40-400 Amp Molded Power Section

R/T Box Assembly Part No.	Primary Voltage at 50/60 Hz	1VA XFMR Part No.	25VA XFMR Part No.
50P-1015	120V	K-3216	K-3224
50P-1016	208-220V	K-3217	K-3225
50P-1017	230-240V	K-3218	K-3226
50P-1018	277V	K-3219	K-3227
50P-1019	380-400V	K-3220	K-3228
50P-1020	416-440V	K-3221	K-3229
57P-1121	460-480V	K-3222	K-3230
57P-1122	575-600V	K-3223	K-3231

40-4000 Amp - All Other Standard Types

R/T Box Assembly Part No.	Primary Voltage at 50/60 Hz	1VA XFMR Part No.	25VA XFMR Part No.
50P-1005	120V	K-3216	K-3224
50P-1006	208-220V	K-3217	K-3225
50P-1007	230-240V	K-3218	K-3226
50P-1008	277V	K-3219	K-3227
50P-1009	380-400V	K-3220	K-3228
50P-1010	416-440V	K-3221	K-3229
50P-1011	460-480V	K-3222	K-3230
50P-1012	575-600V	K-3223	K-3231

Bill of Material

Item	Part No.	Description	Qty
1	See Chart	Transformer (1 VA)	2
2	See Chart	Transformer (25 VA)	2
3	K-1274	Relay Flange Mounted	2

Bill of Material

Item	Part No.	Description	Qty
1	See Chart	Transformer, 25VA	2
2	See Chart	Transformer, 1VA	1
3	K-1260	Coil Control Relay, 24V	2

Katolight Service - Master Repair Manual - Page 4482

Relay/Transformer Box (R/T Box) *(cont'd)*

Delayed Transition

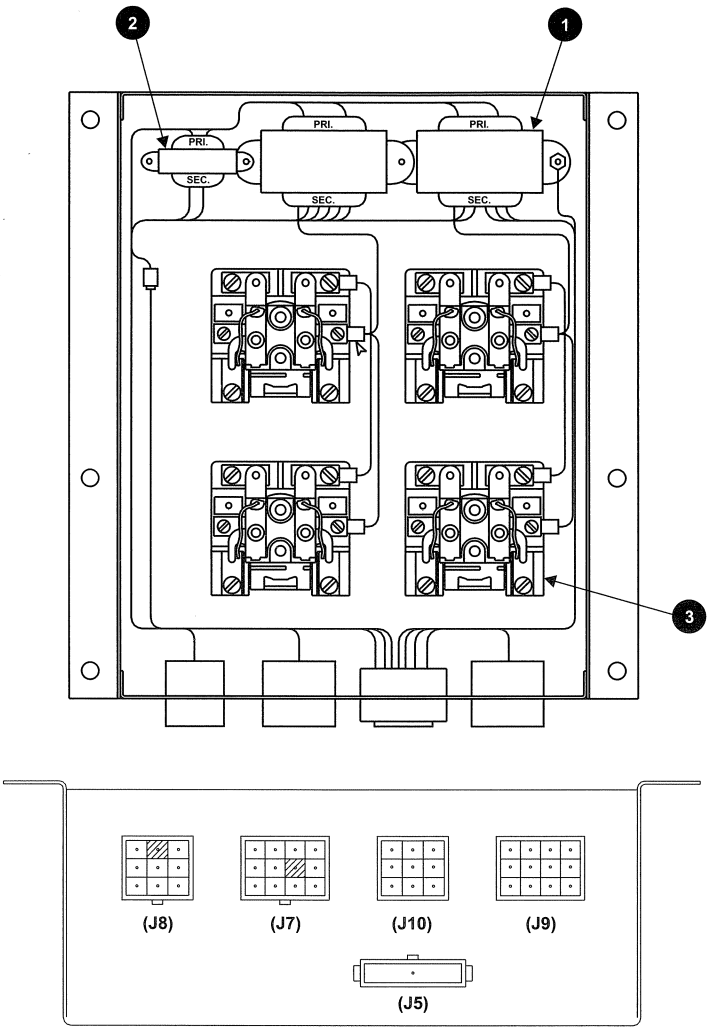

Bill of Material

Item	Part No.	Description	Qty
1	See Chart	Transformer, 25VA	2
2	See Chart	Transformer, 1VA	1
3	K-1260	Coil Control Relay, 24V	4

Transformer Usage

R/T Box Assembly Part No.	Primary Voltage at 50/60 Hz	1VA XFMR Part No.	25VA XFMR Part No.
50P-1013	120V	K-3216	K-3224
50P-1014	208-220V	K-3217	K-3225
50P-1015	230-240V	K-3218	K-3226
50P-1016	277V	K-3219	K-3227
50P-1017	380-400V	K-3220	K-3228
50P-1018	416-440V	K-3221	K-3229
50P-1019	460-480V	K-3222	K-3230
50P-1020	575-600V	K-3223	K-3231

Katolight Service - Master Repair Manual - Page 4483

Standard Transition R/T Box Schematic

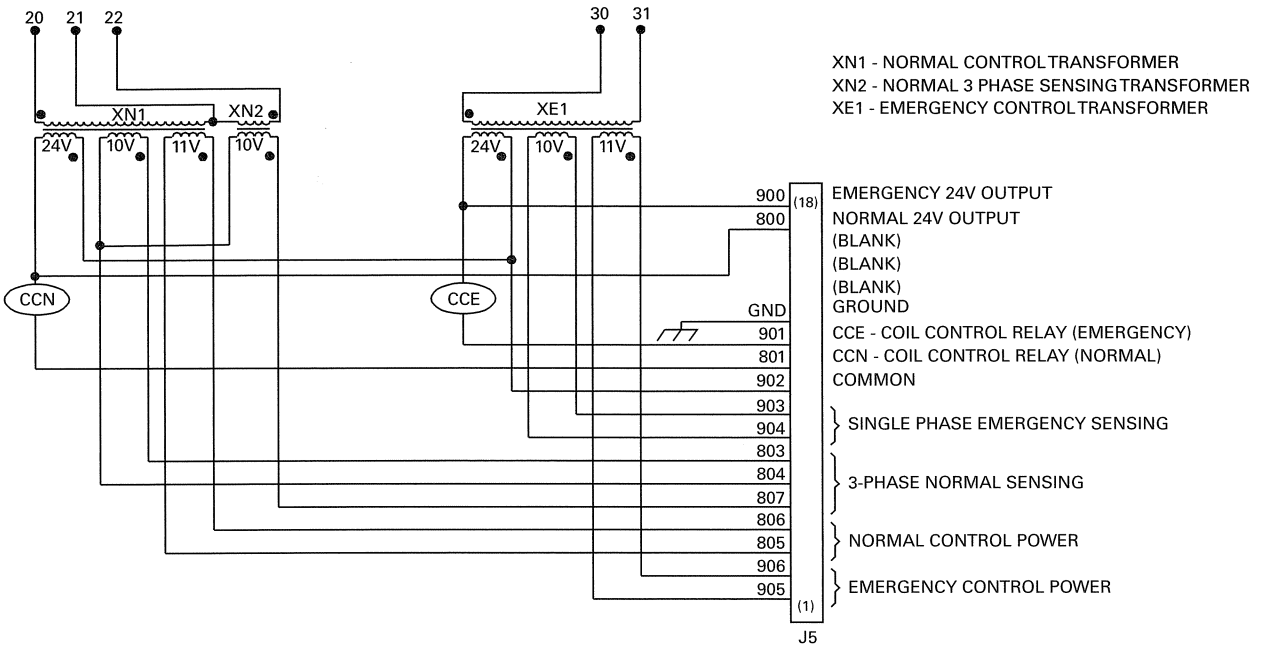

Delayed Transition R/T Box Schematic

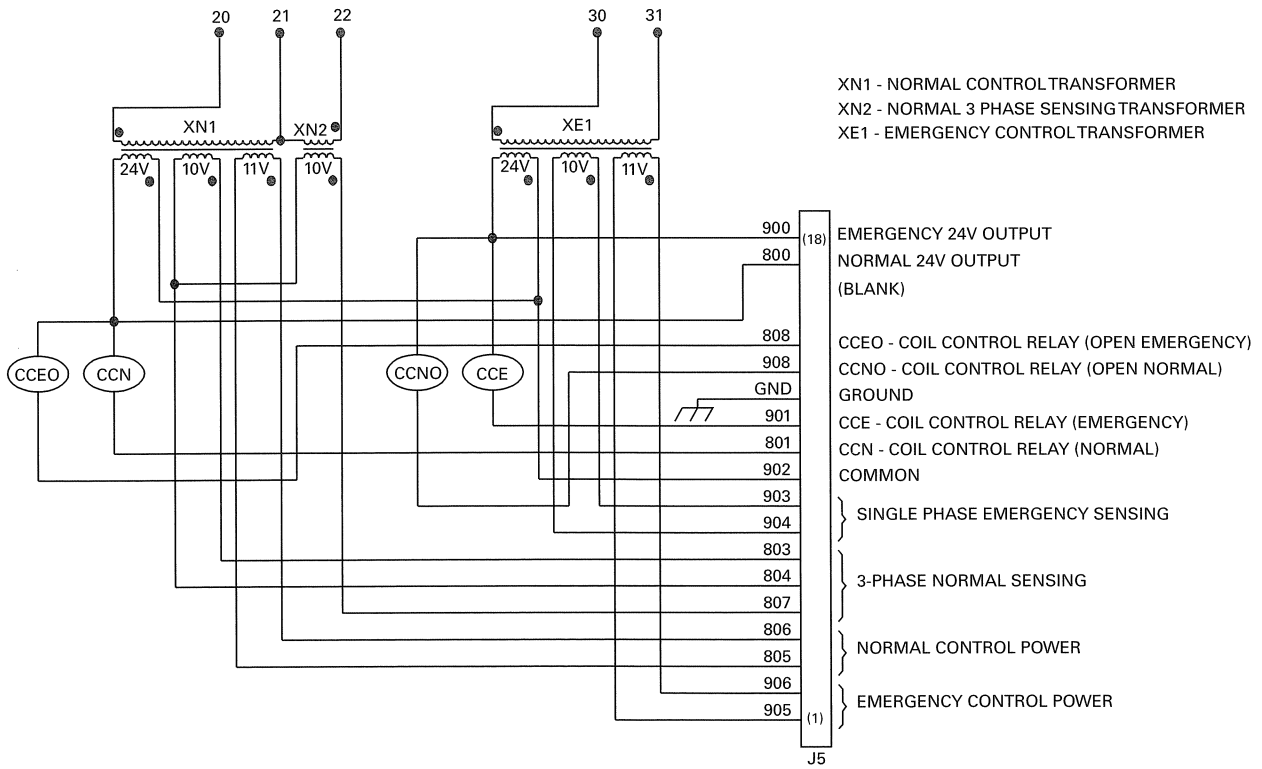

Katolight Service - Master Repair Manual - Page 4484

Standard Drawings Technical Reference

Standard Drawings

GE Zenith Transfer Switch — ZTG(D)K series				
Transfer Switch Amperage	**Legend Operation Accessories**	**Power Circuit and Layout**	**Power Circuit and Layout (2 Pole)**	**MX100 Door View**
30-200	52A-0900	52A-7000	52A-7001	50A-1000
225-260		52A-1000	52A-1001	
400		52A-2000	52A-2001	
600-1200		52A-3000	52A-3001	
1600-3000		52A-8000	52A-8001	
D 40-260	52A-0900D	52A-4000	52A-4001	50A-1000D
D 400		52A-5000	52A-5001	50A-1000
D 600-3000		52A-6000	52A-6001	

GE Zenith Transfer Switch — ZTG(2)K series				
Transfer Switch Amperage	**Legend Operation Accessories**	**Power Circuit and Layout**	**Power Circuit and Layout (2 Pole)**	**MX100 Door View**
225-400	52A-0900	54A-1000	54A-1001	50A-1000

Accessory Drawings

Microprocessor — MX100		
Option Code	**Drawing #**	**ZTG(D)K**
C	50R-1006	X
C/DT	(INTERNAL TO MX100)	X
C/D	50R-1002	X
C/D 365 DAYS	50R-1003	X
D	50R-1006	X
HT	50R-1008	X
	50R-1009	
Q2	50R-1001	X
Q3	50R-1024	X
6A	50R-1010	X
YEN	(INTERNAL TO MX100)	X
ZNET (F32)	50R-1022	X
A6 or T3/W3	50R-1012	X
CTAP	50R-1020	X
MANUAL	50R-1026	X
Q2K	50R-1001	X
Q2M	50R-1001	X
R50	(INTERNAL TO MX100)	X

Katolight Service - Master Repair Manual - Page 4485

Drawing #52A-7000, Page 1

REVISIONS			
REV.	DESCRIPTION	DATE	APPROVED
F	S-7543 UPDATED DWG	10/02/00	SG SB

ATS POWER CIRCUIT SCHEMATIC

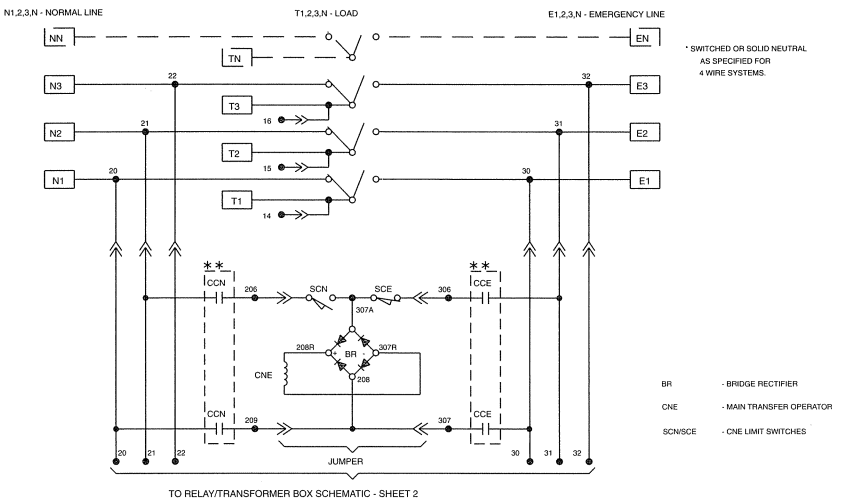

* SWITCHED OR SOLID NEUTRAL AS SPECIFIED FOR 4 WIRE SYSTEMS.

BR - BRIDGE RECTIFIER

CNE - MAIN TRANSFER OPERATOR

SCN/SCE - CNE LIMIT SWITCHES

ATS POWER PANEL LAYOUT

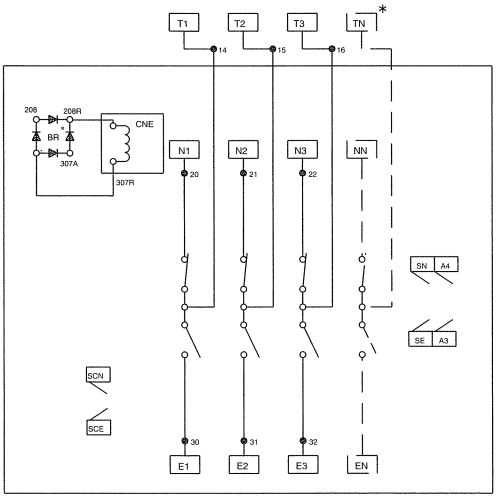

AUXILIARY CONTACTS



LIMIT SWITCH SCHEMATIC

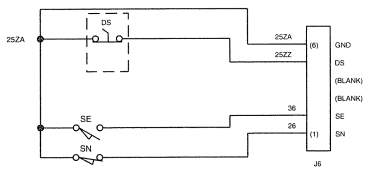

SE - EMERGENCY POSITION LIMIT SWITCH

SN - NORMAL POSITION LIMIT SWITCH

DS - DISCONNECT SWITCH ON MX100

LEGEND	REFERENCE	NOTES
WIRE CONNECTION WIRE ON TERMINAL BLOCK WIRE IN INTERCONNECT PLUG * OPTIONAL ** LOCATED ON RELAY/ TRANSFORMER BOX	LEGEND, OPERATION, AND ACCESSORIES: 52A-0900 FOR PRODUCTION ONLY: R/T BOX AND PLUGS - SEE SHT 2 MX100 CONTROLLER - 50A-1000	ATS SHOWN IN NORMAL POSITION WITH NO POWER AVAILABLE.

GE PROPRIETARY AND CONFIDENTIAL INFORMATION

This document is the property of General Electric ("GE") and contains proprietary information of GE. This document is loaned on the express condition that neither it nor the information contained therein shall be disclosed to others without the express written consent of GE Industrial Systems, and that the information shall be used by the recipient only as approved expressly by GE Industrial Systems. this document shall be returned to GE upon its request. This document may be subject to certain restrictions under U.S. export controls laws and regulations.

THIRD ANGLE PROJECTION

FOR ADDITIONAL INFO REFER TO

APPLIED PRACTICES

UNLESS OTHERWISE SPECIFIED DIMENSIONS ARE IN INCHES

TOLERANCES ON:

2 PL. DECIMALS – .020

3 PL. DECIMALS – .005

ANGLES – 1

FRACTIONS – 1/64

FINISH

AutoCad Generated

SIGNATURES		DATE
MODEL	SB	06/09/97
DETAIL		
CHECKED		
ENGRG		
MFG		
QUALITY		
ISSUED		

DRAWING FILE:

MODEL / ASSEMBLY FILE: ZTG(2/3)K3-22 (30-225A)

CTQs — CRITICAL TO QUALITY CHARACTERISTIC

TITLE

ATS POWER CIRCUIT & LIMIT SWITCHES

FIRST MADE FOR -

SIZE	CAGE CODE	DWG NO
B		52A-7000

SCALE: - SHEET 1 OF 2

Drawing #52A-7000, Page 2

REVISIONS			
REV.	DESCRIPTION	DATE	APPROVED
F	S-7543 UPDATED DWG	10/02/00	SG SB

RELAY/TRANSFORMER BOX SCHEMATIC

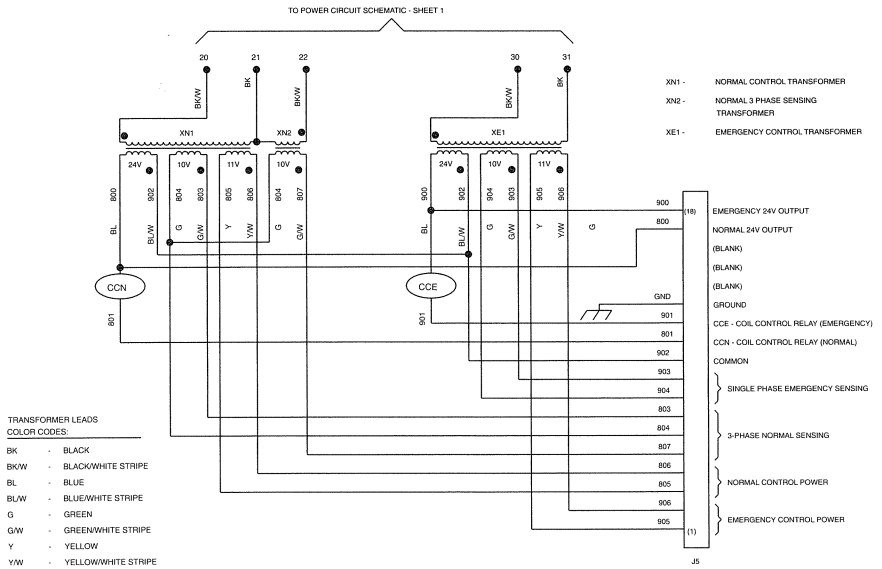

TRANSFORMER LEADS COLOR CODES:

BK	-	BLACK
BK/W	-	BLACK/WHITE STRIPE
BL	-	BLUE
BL/W	-	BLUE/WHITE STRIPE
G	-	GREEN
G/W	-	GREEN/WHITE STRIPE
Y	-	YELLOW
Y/W	-	YELLOW/WHITE STRIPE

RELAY/TRANSFORMER BOX

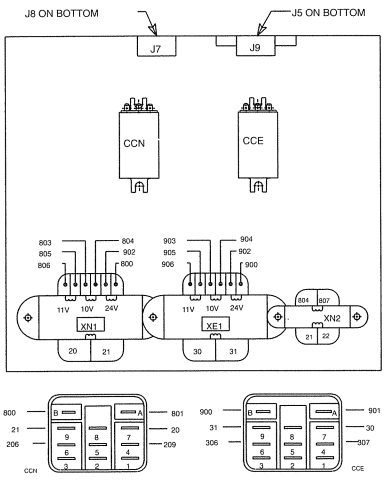

INTERCONNECT PLUG DIAGRAM

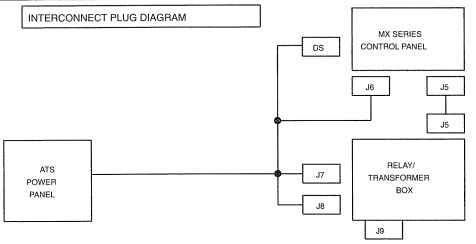

INTERCONNECT PLUGS

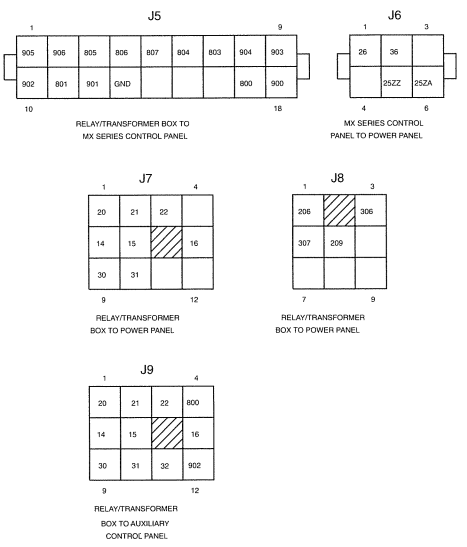

GE PROPRIETARY AND CONFIDENTIAL INFORMATION
The information contained herein is General Electric ("GE") and contains proprietary information of GE. This document is loaned on the express condition that neither it nor the information contained therein shall be disclosed to others without the express written consent of GE Industrial Systems, and that the information shall be used by the recipient only as approved expressly by GE Industrial Systems. this document shall be returned to GE upon its request. This document may be subject to certain restrictions under U.S. export controls laws and regulations.

THIRD ANGLE PROJECTION

FOR ADDITIONAL INFO REFER TO
APPLIED PRACTICES
UNLESS OTHERWISE SPECIFIED DIMENSIONS ARE IN INCHES
TOLERANCES ON
2 PL. DECIMALS – .020
3 PL. DECIMALS – .005
ANGLES – 1
FRACTIONS – 1/64
FINISH

AutoCad Generated

SIGNATURES		DATE
MODEL	SB	06/09/97
DETAIL		
CHECKED		
ENGRG		
MFG		
QUALITY		
ISSUED		

DRAWING FILE
MODEL / ASSEMBLY FILE ZTG(2/3)K3-22 (30-225A)
P CTDs
CRITICAL TO QUALITY CHARACTERISTIC

TITLE
RELAY/XFR BOX & INTERCONNECT PLUGS
FIRST MADE FOR

SIZE	CAGE CODE	DWG NO
B		52A-7000

SCALE: - SHEET 2 OF 2

Katolight Service - Master Repair Manual - Page 4487

Drawing #52A-7001, Page 1

REVISIONS			
REV.	DESCRIPTION	DATE	APPROVED
G	S-7543 UPDATED DWG	10/03/00	SG SB

ATS POWER CIRCUIT SCHEMATIC

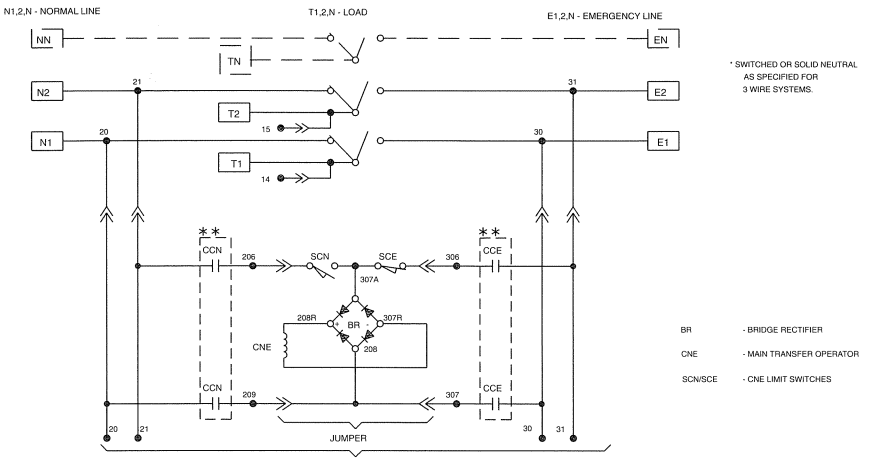

* SWITCHED OR SOLID NEUTRAL AS SPECIFIED FOR 3 WIRE SYSTEMS.

BR - BRIDGE RECTIFIER
CNE - MAIN TRANSFER OPERATOR
SCN/SCE - CNE LIMIT SWITCHES

AUXILIARY CONTACTS



ATS POWER PANEL LAYOUT

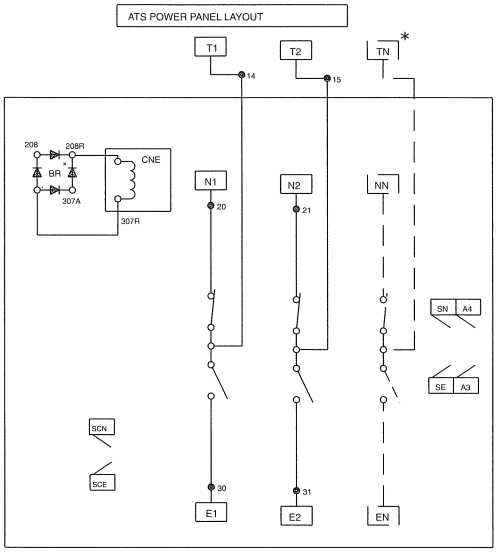

LIMIT SWITCH SCHEMATIC

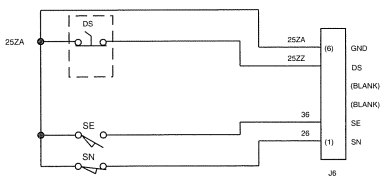

SE - EMERGENCY POSITION LIMIT SWITCH
SN - NORMAL POSITION LIMIT SWITCH
DS - DISCONNECT SWITCH ON MX100

LEGEND	REFERENCE	NOTES
WIRE CONNECTION WIRE ON TERMINAL BLOCK WIRE IN INTERCONNECT PLUG * OPTIONAL ** LOCATED ON RELAY/ TRANSFORMER BOX	LEGEND, OPERATION, AND ACCESSORIES: 52A-0900 FOR PRODUCTION ONLY: R/T BOX AND PLUGS - SEE SHT 2 MX100 CONTROLLER - 50A-1000	ATS SHOWN IN NORMAL POSITION WITH NO POWER AVAILABLE.

GE PROPRIETARY AND CONFIDENTIAL INFORMATION
This document is the property of General Electric ("GE") and contains proprietary information of GE. This document is loaned on the express condition that neither it nor the information contained therein shall be disclosed to others without the express written consent of GE Industrial Systems, and that the information shall be used by the recipient only as approved expressly by GE Industrial Systems. this document shall be returned to GE upon its request. This document may be subject to certain restrictions under U.S. export controls laws and regulations.

THIRD ANGLE PROJECTION

FOR ADDITIONAL INFO REFER TO
APPLIED PRACTICES
UNLESS OTHERWISE SPECIFIED DIMENSIONS ARE IN INCHES
TOLERANCES ON
2 PL. DECIMALS – .020
3 PL. DECIMALS – .005
ANGLES – 1
FRACTIONS – 1/64
FINISH

AutoCad Generated

SIGNATURES		DATE
MODEL	SB	06/09/97
DETAIL		
CHECKED		
ENGRG		
MFG		
QUALITY		
ISSUED		

DRAWING FILE
MODEL / ASSEMBLY FILE ZTG(2/3)K3-22 (30-225A), 2
CTQs
CRITICAL TO QUALITY CHARACTERISTIC

TITLE
ATS POWER CIRCUIT & LIMIT SWITCHES
FIRST MADE FOR -

SIZE	CAGE CODE	DWG NO
B		52A-7001
SCALE: -		SHEET 1 OF 2

Katolight Service - Master Repair Manual - Page 4488

Drawing #52A-7001, Page 2

REVISIONS				
REV.	DESCRIPTION		DATE	APPROVED
G	S-7543	UPDATED DWG	10/03/00	SG SB

RELAY/TRANSFORMER BOX SCHEMATIC

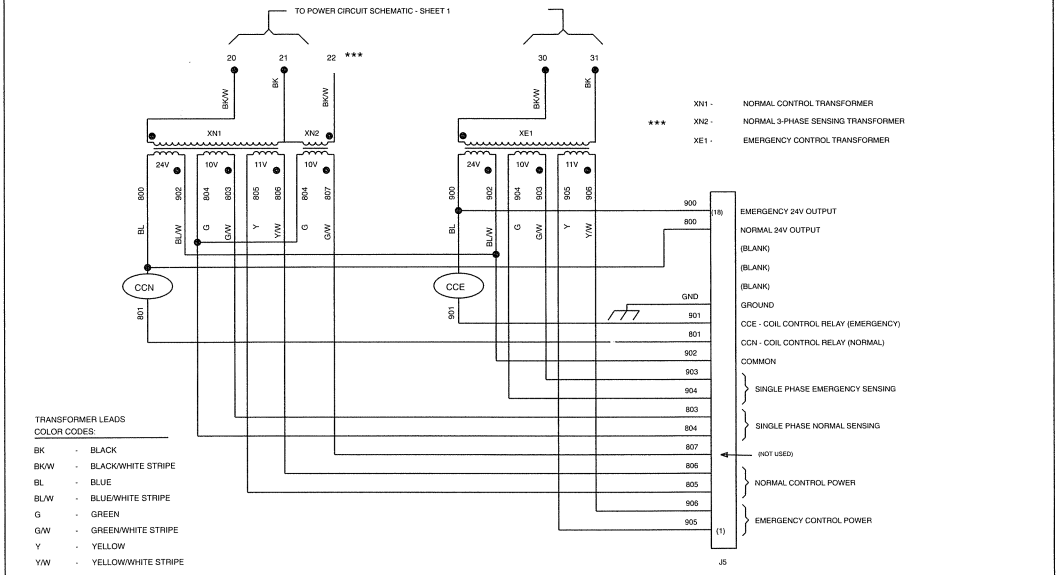

TRANSFORMER LEADS
COLOR CODES:

BK	-	BLACK
BK/W	-	BLACK/WHITE STRIPE
BL	-	BLUE
BL/W	-	BLUE/WHITE STRIPE
G	-	GREEN
G/W	-	GREEN/WHITE STRIPE
Y	-	YELLOW
Y/W	-	YELLOW/WHITE STRIPE

RELAY/TRANSFORMER BOX

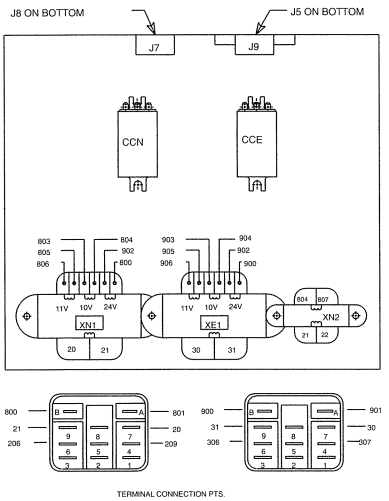

TERMINAL CONNECTION PTS.

INTERCONNECT PLUGS

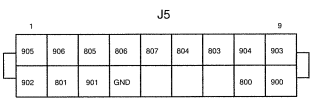

RELAY/TRANSFORMER BOX TO MX SERIES CONTROL PANEL

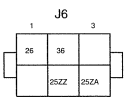

MX SERIES CONTROL PANEL TO POWER PANEL

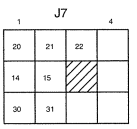

RELAY/TRANSFORMER BOX TO POWER PANEL

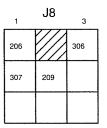

RELAY/TRANSFORMER BOX TO POWER PANEL

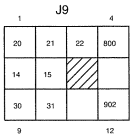

RELAY/TRANSFORMER BOX TO AUXILIARY CONTROL PANEL

INTERCONNECT PLUG DIAGRAM

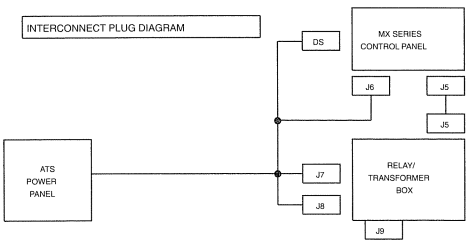

LEGEND

WIRE CONNECTION

*** WIRE #22 REMAINS WIRED IN RELAY/ TRANSFORMER BOX. WIRE #22 IS NOT CONNECTED TO ATS POWER PANEL.

GE PROPRIETARY AND CONFIDENTIAL INFORMATION

This document is the property of General Electric ("GE") and contains proprietary information of GE. This document is loaned on the express condition that neither it nor the information contained therein shall be disclosed to others without the express written consent of GE Industrial Systems, and that the information shall be used by the recipient only as approved expressly by GE Industrial Systems. this document shall be returned to GE upon its request. This document may be subject to certain restrictions under U.S. export controls laws and regulations.

THIRD ANGLE PROJECTION

FOR ADDITIONAL INFO REFER TO

APPLIED PRACTICES

UNLESS OTHERWISE SPECIFIED DIMENSIONS ARE IN INCHES

TOLERANCES ON:

2 PL. DECIMALS –	.020
3 PL. DECIMALS –	.005
ANGLES –	1
FRACTIONS –	1/64

FINISH

AutoCad Generated

SIGNATURES		DATE
MODEL	SB	06/09/97
DETAIL		
CHECKED		
ENGRG		
MFG		
QUALITY		
ISSUED		

DRAWING FILE

MODEL / ASSEMBLY FILE: ZTG(2/3)K3-22 (30-225A) 2F

CTQs: CRITICAL TO QUALITY CHARACTERISTIC

TITLE

RELAY/XFR BOX
& INTERCONNECT PLUGS

FIRST MADE FOR:

SIZE	CAGE CODE	DWG NO
B		52A-7001

SCALE: - SHEET 2 OF 2

Katolight Service - Master Repair Manual - Page 4489

Drawing #52A-1000, Page 1

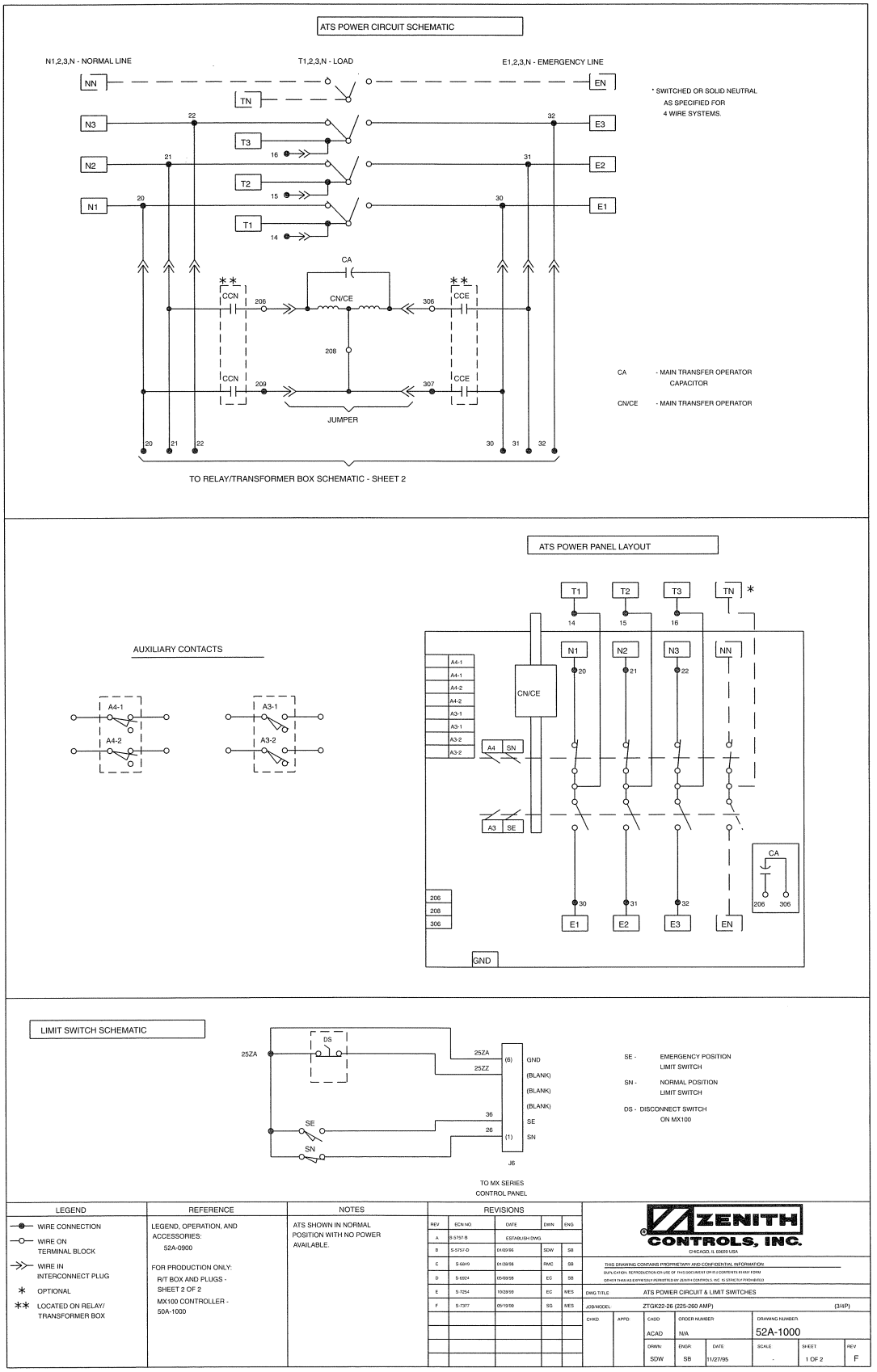

LEGEND	REFERENCE	NOTES
WIRE CONNECTION WIRE ON TERMINAL BLOCK WIRE IN INTERCONNECT PLUG * OPTIONAL ** LOCATED ON RELAY/ TRANSFORMER BOX	LEGEND, OPERATION, AND ACCESSORIES: 52A-0900 FOR PRODUCTION ONLY: R/T BOX AND PLUGS - SHEET 2 OF 2 MX100 CONTROLLER - 50A-1000	ATS SHOWN IN NORMAL POSITION WITH NO POWER AVAILABLE.

REVISIONS				
REV.	ECN NO.	DATE	DWN	ENG.
A	S-5757-B	ESTABLISH DWG.		
B	S-5757-D	01/03/96	SDW	SB
C	S-5849	01/29/96	RWC	SB
D	S-6024	05/03/96	EC	SB
E	S-7254	10/28/99	EC	MES
F	S-7377	05/19/00	SG	MES

ZENITH CONTROLS, INC.
CHICAGO, IL 60609 USA

THIS DRAWING CONTAINS PROPRIETARY AND CONFIDENTIAL INFORMATION
DUPLICATION, REPRODUCTION OR USE OF THIS DESIGN OR ITS CONTENTS IN ANY FORM OTHER THAN AS EXPRESSLY PERMITTED BY ZENITH CONTROLS, INC. IS STRICTLY PROHIBITED

DWG TITLE	ATS POWER CIRCUIT & LIMIT SWITCHES					
JOB/MODEL	ZTGK22-26 (225-260 AMP)					(3/4P)
CHKD	APPD	CADD	ORDER NUMBER	DRAWING NUMBER		
		ACAD	N/A	52A-1000		
		DRWN	ENGR	DATE	SCALE	SHEET	REV
		SDW	SB	11/27/95	-	1 OF 2	F

Katolight Service - Master Repair Manual - Page 4490

Drawing #52A-1000, Page 2

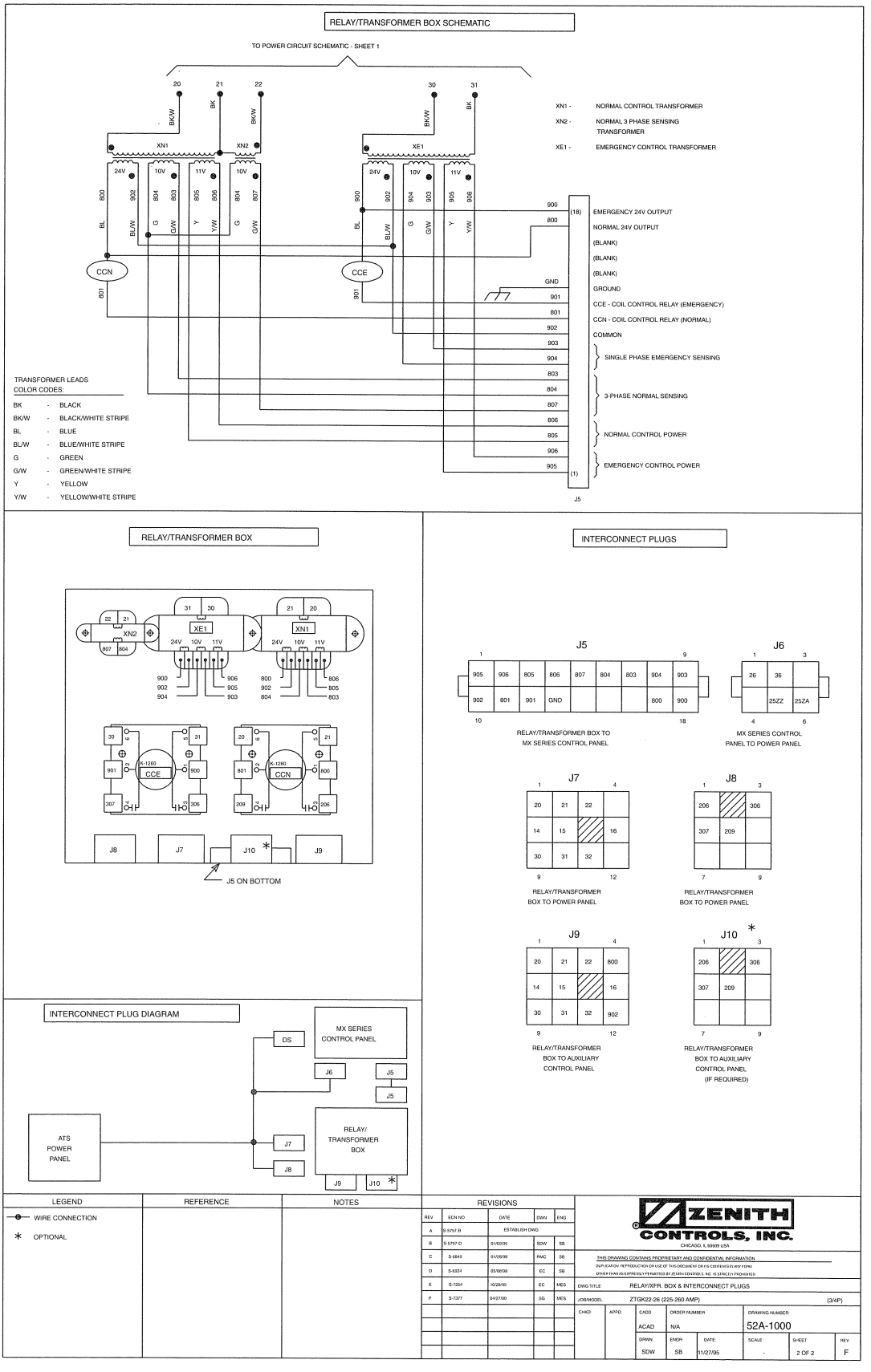

Katolight Service - Master Repair Manual - Page 4491

Drawing #52A-1001, Page 1

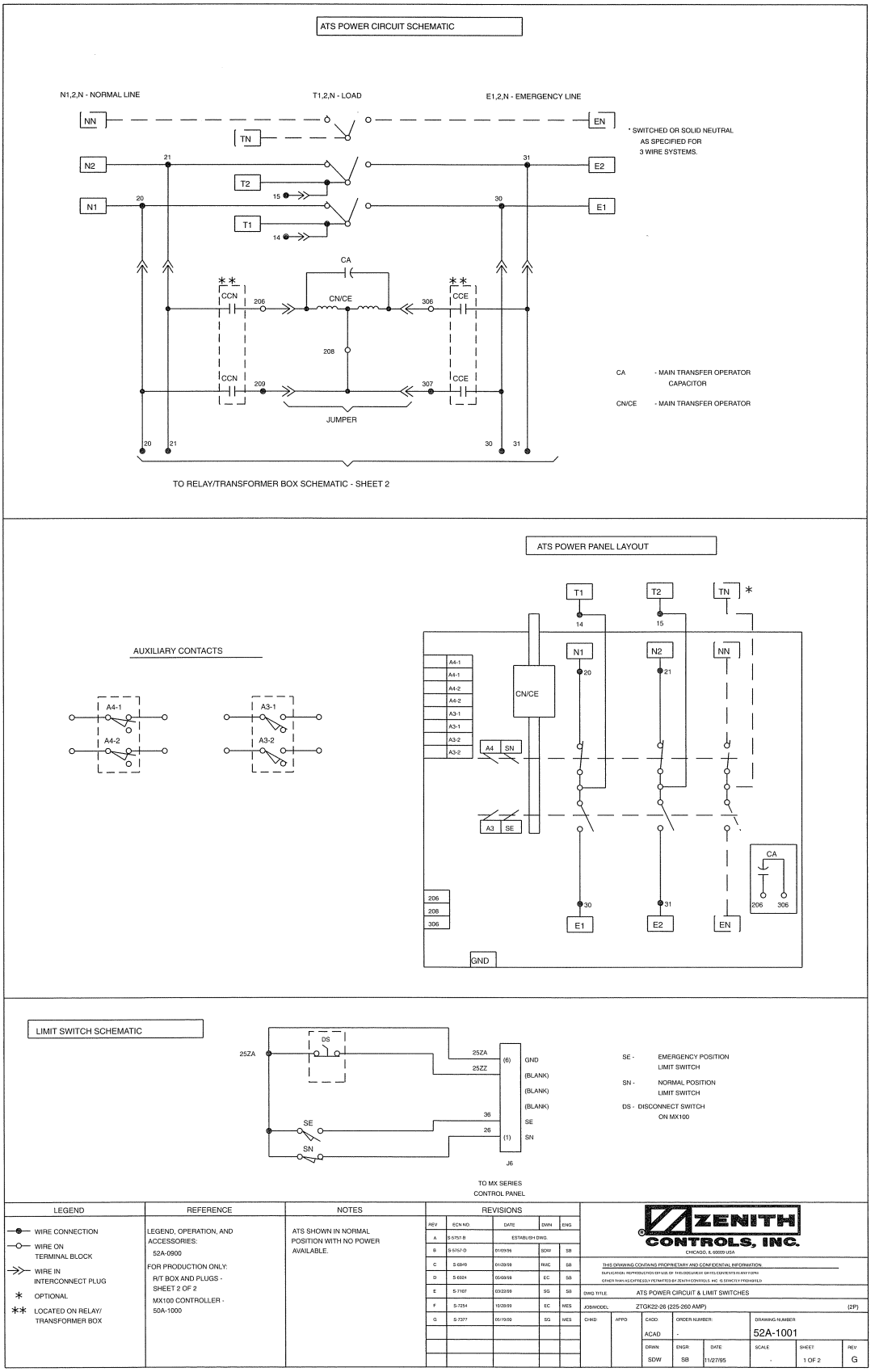

LEGEND	REFERENCE	NOTES
WIRE CONNECTION WIRE ON TERMINAL BLOCK WIRE IN INTERCONNECT PLUG * OPTIONAL ** LOCATED ON RELAY/ TRANSFORMER BOX	LEGEND, OPERATION, AND ACCESSORIES: 52A-0900 FOR PRODUCTION ONLY: R/T BOX AND PLUGS - SHEET 2 OF 2 MX100 CONTROLLER - 50A-1000	ATS SHOWN IN NORMAL POSITION WITH NO POWER AVAILABLE.

REVISIONS				
REV	ECN NO.	DATE	DWN	ENG
A	S-5757-B	ESTABLISH DWG.		
B	S-5757-D	01/05/96	SDW	SB
C	S-6849	01/20/98	RWC	SB
D	S-6924	05/08/98	EC	SB
E	S-7107	03/22/99	SG	SB
F	S-7254	10/20/99	EC	MES
G	S-7377	05/10/00	SG	MES

ZENITH CONTROLS, INC.
CHICAGO, IL 60639 USA

THIS DRAWING CONTAINS PROPRIETARY AND CONFIDENTIAL INFORMATION.
DUPLICATION, REPRODUCTION OR USE OF THIS DRAWING IN ANY FORM IN WHOLE OR IN PART BY ANY MEANS, ELECTRONIC, MECHANICAL OR OTHERWISE, INCLUDING BUT NOT LIMITED TO PHOTOCOPYING, RECORDING OR INFORMATION STORAGE AND RETRIEVAL SYSTEMS, WITHOUT THE EXPRESS WRITTEN PERMISSION OF ZENITH CONTROLS, INC. IS STRICTLY FORBIDDEN.

DWG TITLE	ATS POWER CIRCUIT & LIMIT SWITCHES
JOB/MODEL	ZTGK22-26 (225-260 AMP) (2P)
CHKD	
APPD	
CADD	ACAD
ORDER NUMBER	-
DRAWING NUMBER	52A-1001
DRAWN	SDW
ENGR	SB
DATE	11/27/95
SCALE	-
SHEET	1 OF 2
REV	G

Katolight Service - Master Repair Manual - Page 4492

Drawing #52A-1001, Page 2

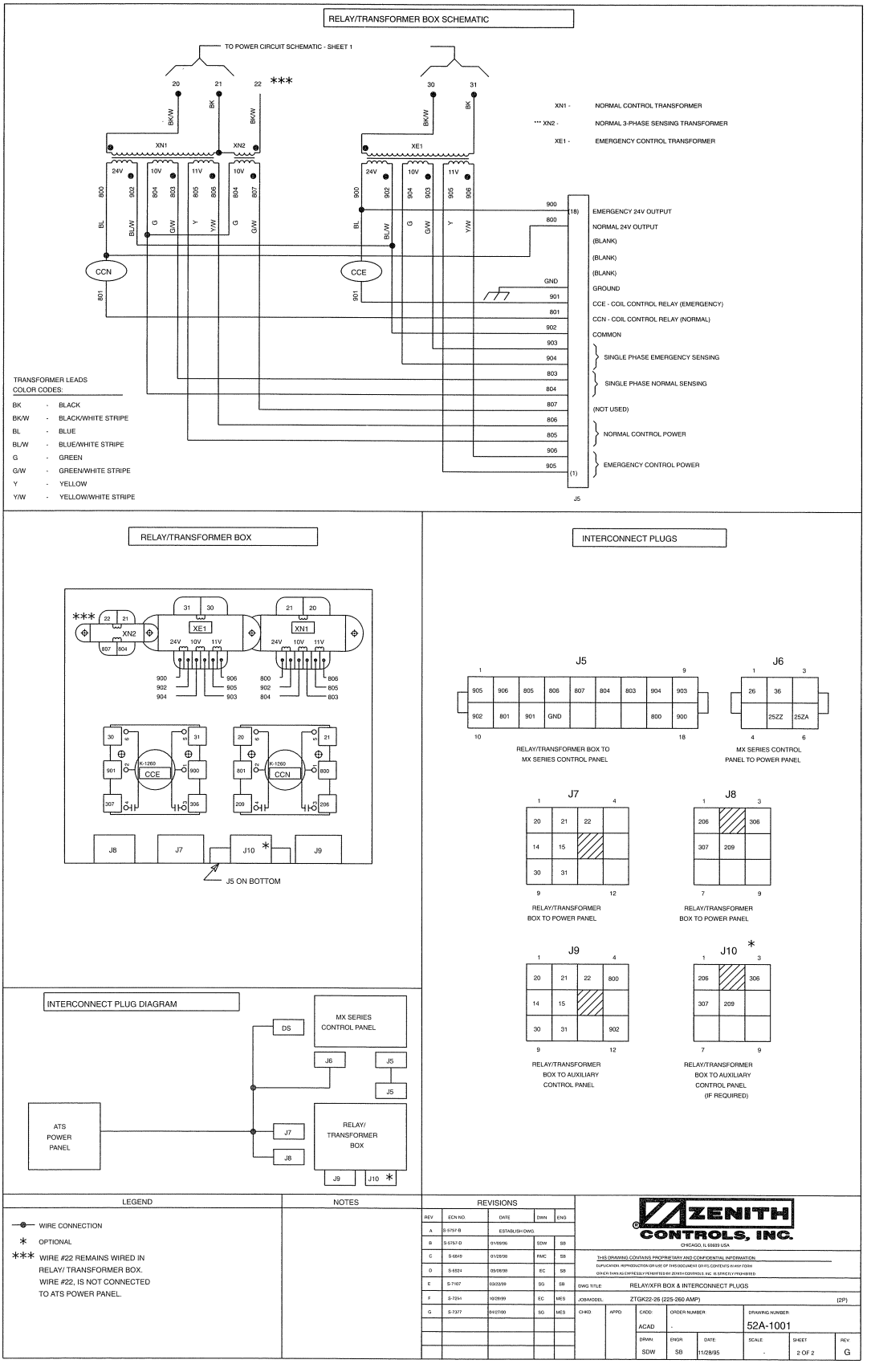

Katolight Service - Master Repair Manual - Page 4493

Drawing #52A-2000, Page 1

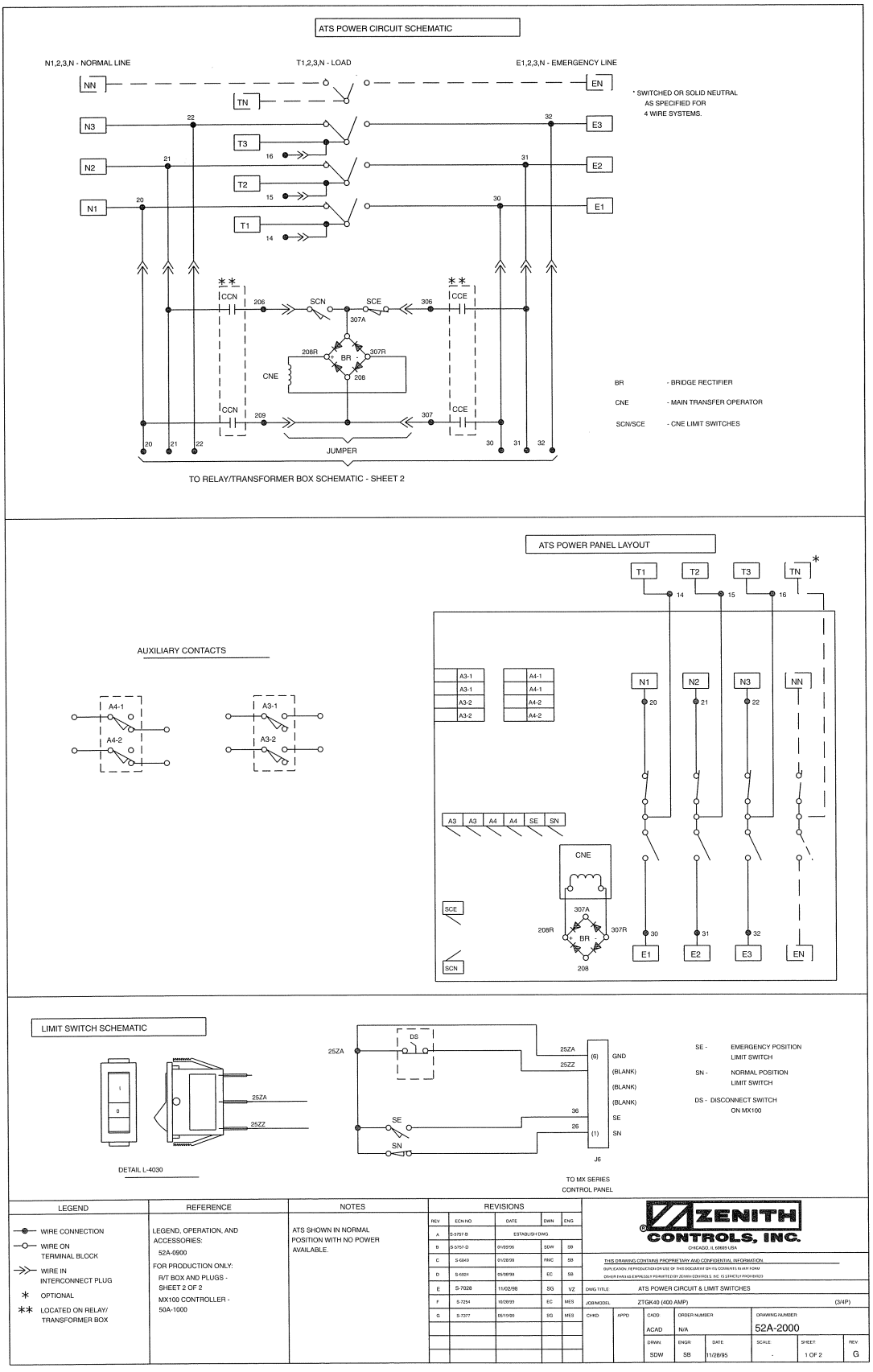

LEGEND	REFERENCE	NOTES
WIRE CONNECTION WIRE ON TERMINAL BLOCK WIRE IN INTERCONNECT PLUG * OPTIONAL ** LOCATED ON RELAY/ TRANSFORMER BOX	LEGEND, OPERATION, AND ACCESSORIES: 52A-0900 FOR PRODUCTION ONLY: R/T BOX AND PLUGS - SHEET 2 OF 2 MX100 CONTROLLER - 50A-1000	ATS SHOWN IN NORMAL POSITION WITH NO POWER AVAILABLE.

REVISIONS				
REV	ECN NO	DATE	DWN	ENG
A	S-5757-B	ESTABLISH DWG		
B	S-5757-D	01/05/96	SDW	SB
C	S-6249	01/28/98	RMC	SB
D	S-6924	05/08/98	EC	SB
E	S-7028	11/02/98	SG	VZ
F	S-7254	10/20/99	EC	MES
G	S-7377	05/10/00	SG	MES

ZENITH CONTROLS, INC.
CHICAGO, IL 60629 USA

THIS DRAWING CONTAINS PROPRIETARY AND CONFIDENTIAL INFORMATION.
DUPLICATION, REPRODUCTION OR USE OF THIS SOLELY BY ZENITH CONTROLS MAY FORM OTHER THAN AS EXPRESSLY PERMITTED BY ZENITH CONTROLS, INC. IS STRICTLY PROHIBITED

DWG TITLE	ATS POWER CIRCUIT & LIMIT SWITCHES
JOB/MODEL	ZTGK4D (400 AMP) (3/4P)
CHKD	
APPD	
CADD	ACAD
ORDER NUMBER	N/A
DRAWING NUMBER	52A-2000
DRWN	SDW
ENGR	SB
DATE	11/28/95
SCALE	-
SHEET	1 OF 2
REV	G

Katolight Service - Master Repair Manual - Page 4494

Drawing #52A-2000, Page 2

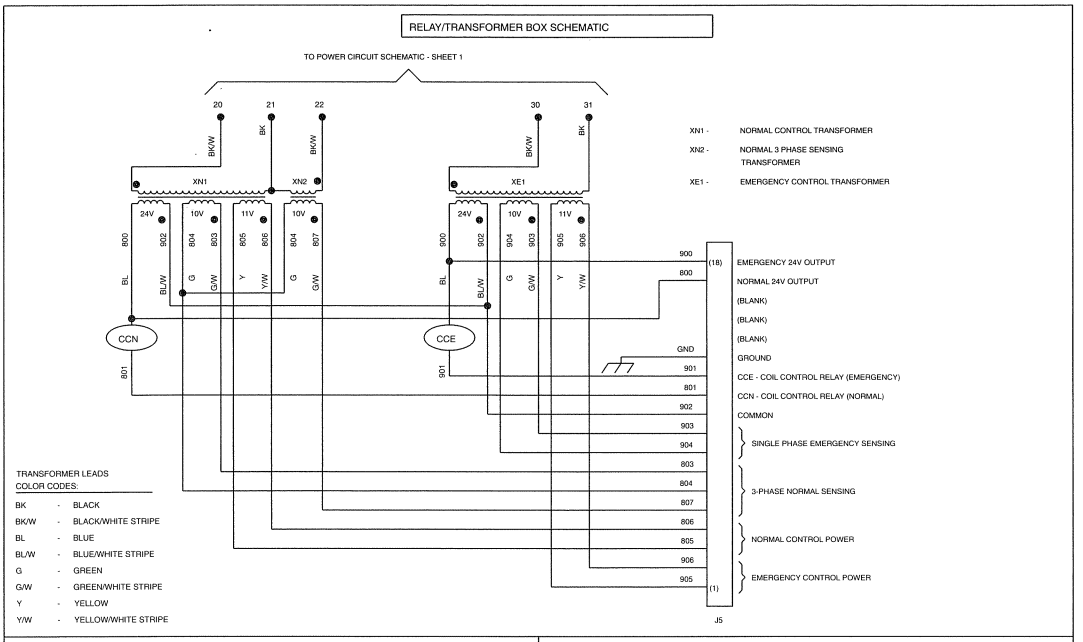

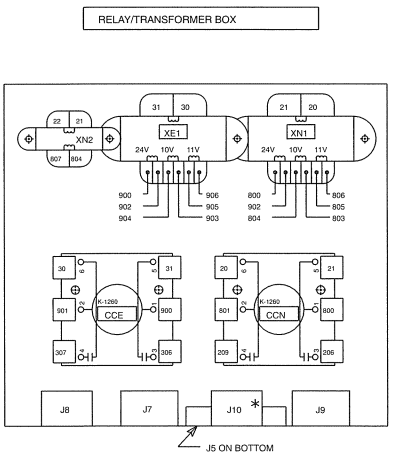

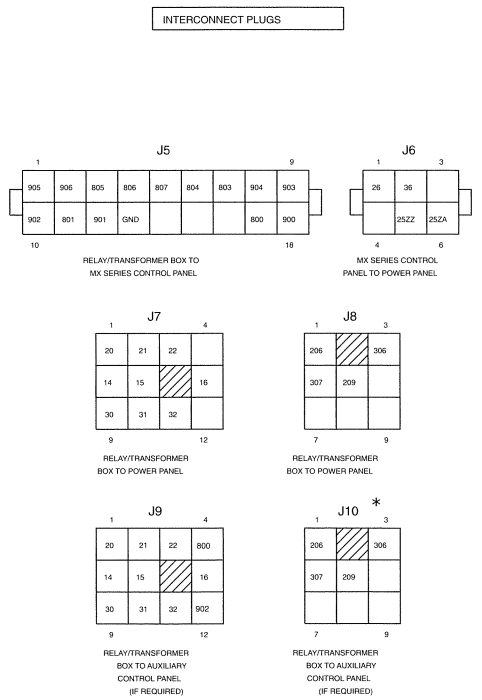

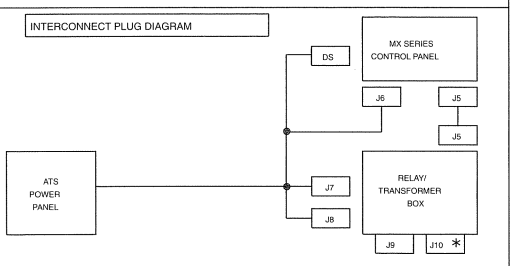

LEGEND	REFERENCE	NOTES
WIRE CONNECTION		
* OPTIONAL		

REV	ECN NO.	DATE	DWN	ENG
A	S-5757-B	ESTABLISH DWG		
B	S-5757-D	01/05/96	SDW	SB
C	S-6849	01/28/98	RWC	SB
D	S-6931	03/05/98	EC	SB
E	S-7028	11/02/98	SG	VZ
F	S-7254	10/20/99	EC	MES
G	S-7377	01/27/00	SG	MES

ZENITH CONTROLS, INC.
CHICAGO, IL 60659 USA

THIS DRAWING CONTAINS PROPRIETARY AND CONFIDENTIAL INFORMATION.
DUPLICATION, REPRODUCTION OR USE OF THIS DOCUMENT OR ITS CONTENTS IN ANY FORM OTHER THAN AS EXPRESSLY PERMITTED BY ZENITH CONTROLS, INC. IS STRICTLY PROHIBITED

DWG TITLE: RELAY/XFR BOX & INTERCONNECT PLUGS
JOB/MODEL: ZTGK40 (400 AMP) (3/4P)

CHKD	APPD	CADD	ORDER NUMBER	DRAWING NUMBER
		SSK	N/A	52A-2000

DRAWN	ENGR	DATE	SCALE	SHEET	REV
SDW	SB	11/28/95	-	2 OF 2	G

Katolight Service - Master Repair Manual - Page 4495

Drawing #52A-2001, Page 1

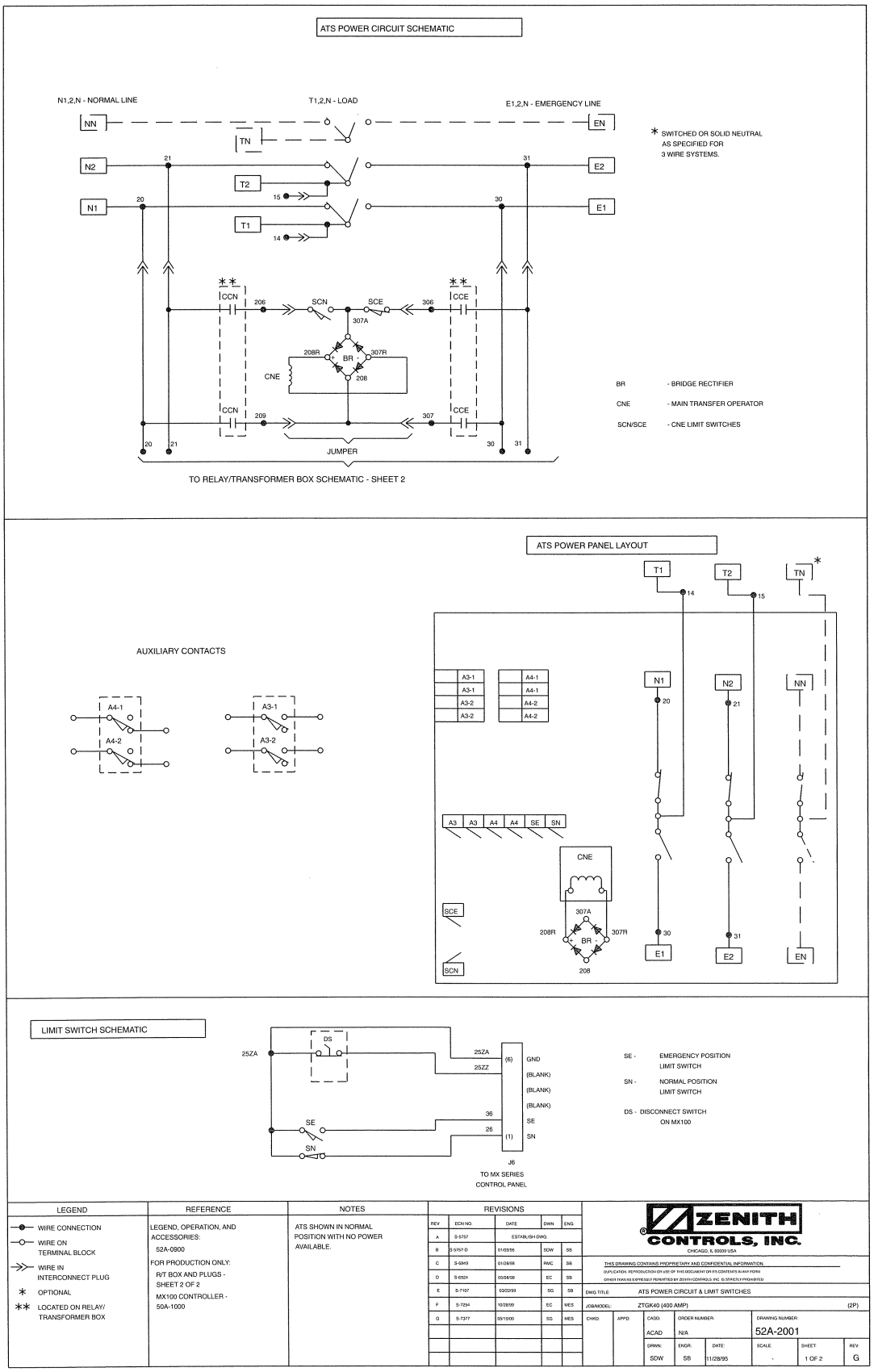

LEGEND	REFERENCE	NOTES
WIRE CONNECTION WIRE ON TERMINAL BLOCK WIRE IN INTERCONNECT PLUG * OPTIONAL ** LOCATED ON RELAY/ TRANSFORMER BOX	LEGEND, OPERATION, AND ACCESSORIES: 52A-0900 FOR PRODUCTION ONLY: R/T BOX AND PLUGS - SHEET 2 OF 2 MX100 CONTROLLER - 50A-1000	ATS SHOWN IN NORMAL POSITION WITH NO POWER AVAILABLE.

REVISIONS

REV	ECN NO.	DATE	DWN	ENG
A	S-5757	ESTABLISH DWG.		
B	S-5757-D	01/03/96	SDW	SB
C	S-5949	01/29/98	RWC	SB
D	S-6024	05/08/98	EC	SB
E	S-7107	03/02/99	SG	SB
F	S-7234	10/26/99	EC	MES
G	S-7377	05/15/00	SG	MES

ZENITH CONTROLS, INC.
CHICAGO, IL 60639 USA

THIS DRAWING CONTAINS PROPRIETARY AND CONFIDENTIAL INFORMATION.
DUPLICATION, REPRODUCTION OR USE OF THIS DOCUMENT OR ITS CONTENTS IN ANY FORM OTHER THAN AS EXPRESSLY PERMITTED BY ZENITH CONTROLS, INC. IS STRICTLY PROHIBITED

DWG TITLE: ATS POWER CIRCUIT & LIMIT SWITCHES

JOB/MODEL: ZTGK40 (400 AMP) (2P)

CHKD:	APP'D:	CADD:	ORDER NUMBER:	DRAWING NUMBER:
		ACAD	N/A	52A-2001

DRWN:	ENGR:	DATE:	SCALE:	SHEET:	REV:
SDW	SB	11/28/95	-	1 OF 2	G

Katolight Service - Master Repair Manual - Page 4496

Drawing #52A-2001, Page 2

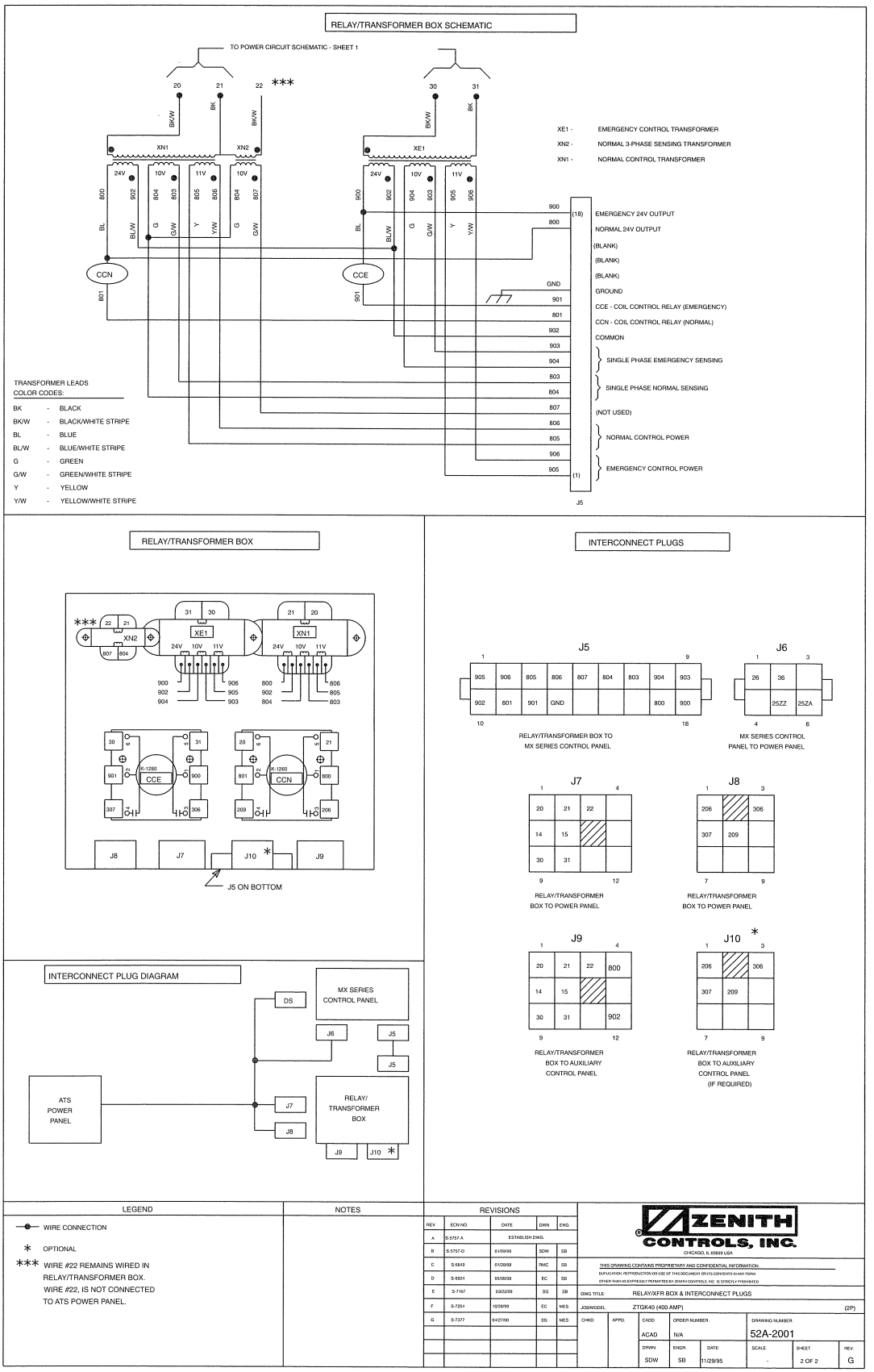

Katolight Service - Master Repair Manual - Page 4497

Drawing #52A-3000, Page 1

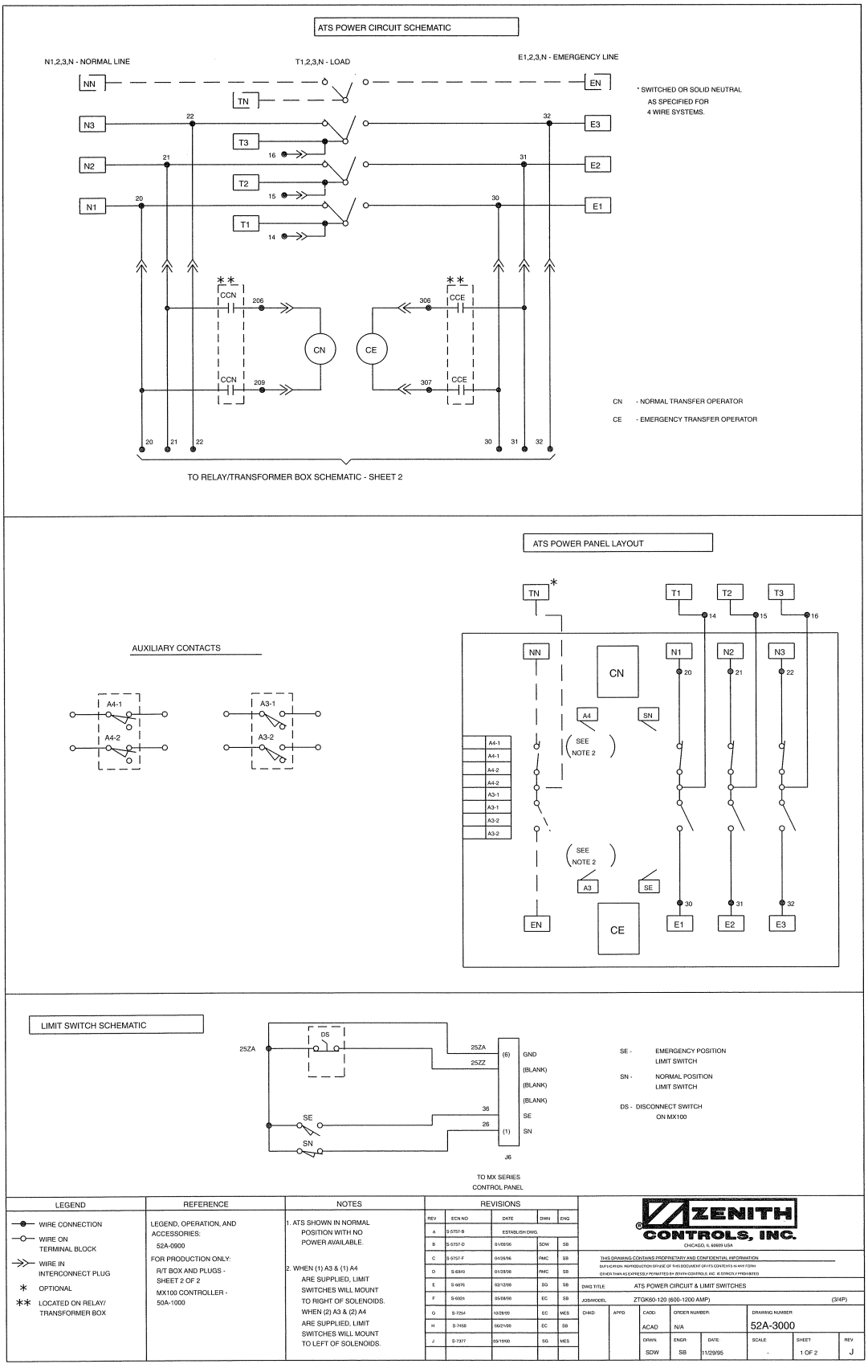

LEGEND	REFERENCE	NOTES
WIRE CONNECTION WIRE ON TERMINAL BLOCK WIRE IN INTERCONNECT PLUG * OPTIONAL ** LOCATED ON RELAY/ TRANSFORMER BOX	LEGEND, OPERATION, AND ACCESSORIES: 52A-0900 FOR PRODUCTION ONLY: R/T BOX AND PLUGS - SHEET 2 OF 2 MX100 CONTROLLER - 50A-1000	1. ATS SHOWN IN NORMAL POSITION WITH NO POWER AVAILABLE. 2. WHEN (1) A3 & (1) A4 ARE SUPPLIED, LIMIT SWITCHES WILL MOUNT TO RIGHT OF SOLENOIDS. WHEN (2) A3 & (2) A4 ARE SUPPLIED, LIMIT SWITCHES WILL MOUNT TO LEFT OF SOLENOIDS.

REVISIONS				
REV	ECN NO	DATE	DWN	ENG
A	S-5757-B	ESTABLISH DWG.		
B	S-5757-D	01/05/95	SDW	SB
C	S-5757-F	04/26/96	RMC	SB
D	S-6940	01/28/98	RMC	SB
E	S-6976	02/13/98	SG	SB
F	S-6924	05/08/98	EC	SB
G	S-7254	10/28/99	EC	MES
H	S-7456	06/21/00	EC	SB
J	S-7377	09/19/00	SG	MES

ZENITH CONTROLS, INC.
CHICAGO, IL 60609 USA

THIS DRAWING CONTAINS PROPRIETARY AND CONFIDENTIAL INFORMATION.
DUPLICATION, REPRODUCTION OR USE OF THIS DOCUMENT OR ITS CONTENTS IN ANY FORM OTHER THAN AS EXPRESSLY PERMITTED BY ZENITH CONTROLS, INC. IS STRICTLY PROHIBITED

DWG TITLE:	ATS POWER CIRCUIT & LIMIT SWITCHES					
JOB/MODEL:	ZTGK60-120 (600-1200 AMP)					(3/4P)
CHKD:	APPD:	CADD: ACAD	ORDER NUMBER: N/A	DRAWING NUMBER: 52A-3000		
		DRWN: SDW	ENGR: SB	DATE: 11/29/95	SCALE: -	SHEET: 1 OF 2	REV: J

Katolight Service - Master Repair Manual - Page 4498

Drawing #52A-3000, Page 2

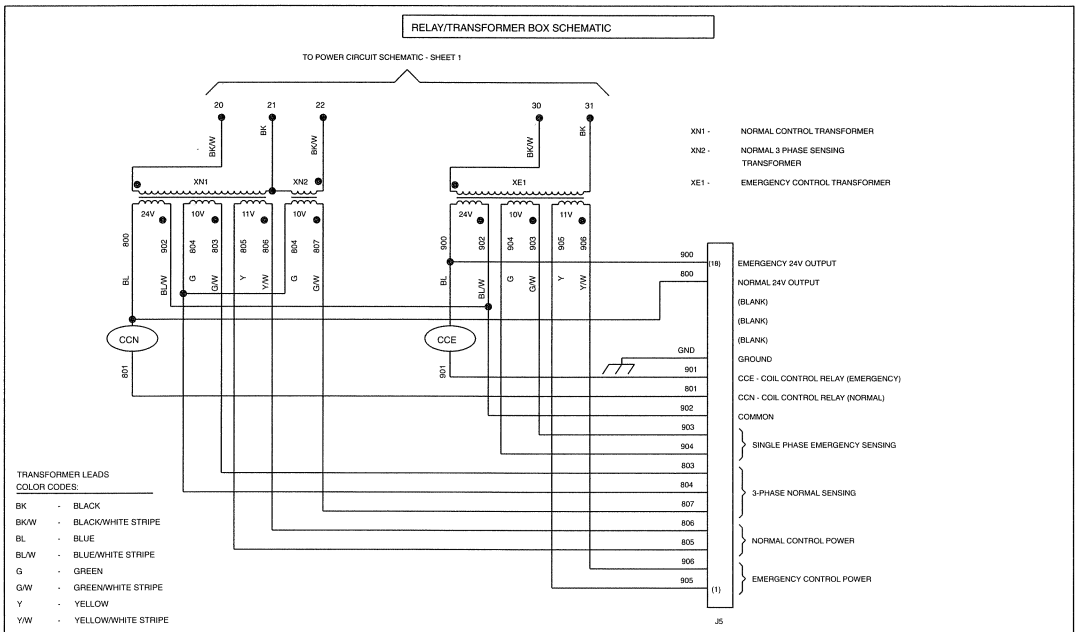

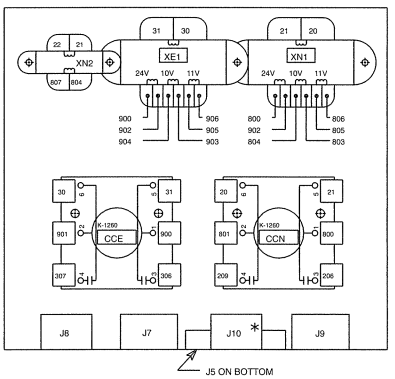

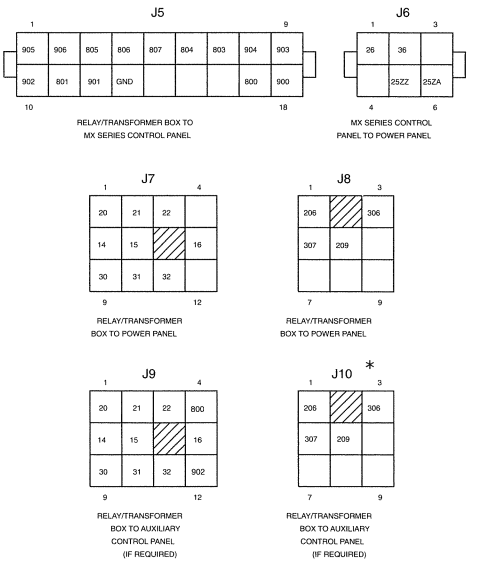

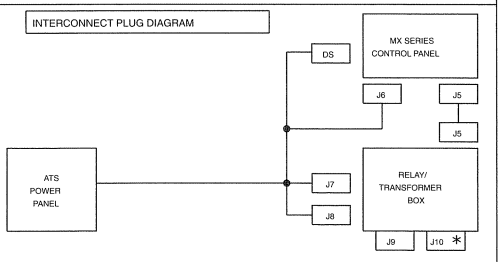

LEGEND	REFERENCE	NOTES
WIRE CONNECTION		
* OPTIONAL		

REVISIONS				
REV	ECN NO.	DATE	DWN	ENG
A	S-5757-B	ESTABLISH DWG.		
B	S-5757-D	01/03/96	SDW	SB
C	S-5757-F	04/05/96	RMC	SB
D	S-5949	01/30/98	RMC	SB
E	S-6976	02/12/99	SG	SB
F	S-6924	05/06/99	EC	SB
G	S-7254	10/26/99	EC	MES
H	S-7450	05/21/00	EC	SB
J	S-7377	04/27/00	SG	MES

ZENITH CONTROLS, INC.
CHICAGO, IL 60069 USA

THIS DRAWING CONTAINS PROPRIETARY AND CONFIDENTIAL INFORMATION
DUPLICATION, REPRODUCTION OR USE OF THIS DOCUMENT OR ITS CONTENTS IN ANY FORM OTHER THAN AS EXPRESSLY PERMITTED BY ZENITH CONTROLS, INC. IS STRICTLY PROHIBITED

DWG TITLE:	RELAY/XFR. BOX & INTERCONNECT PLUGS
JOB/MODEL:	ZTGK60-120 (600-1200 AMP) (3/4P)

CHKD.	APPD.	CADD ORDER NUMBER	DRAWING NUMBER
		ACAD N/A	52A-3000

DRWN.	ENGR.	DATE:	SCALE:	SHEET	REV.
SDW	SB	11/29/95	-	2 OF 2	J

Katolight Service - Master Repair Manual - Page 4499

Drawing #52A-3001, Page 1

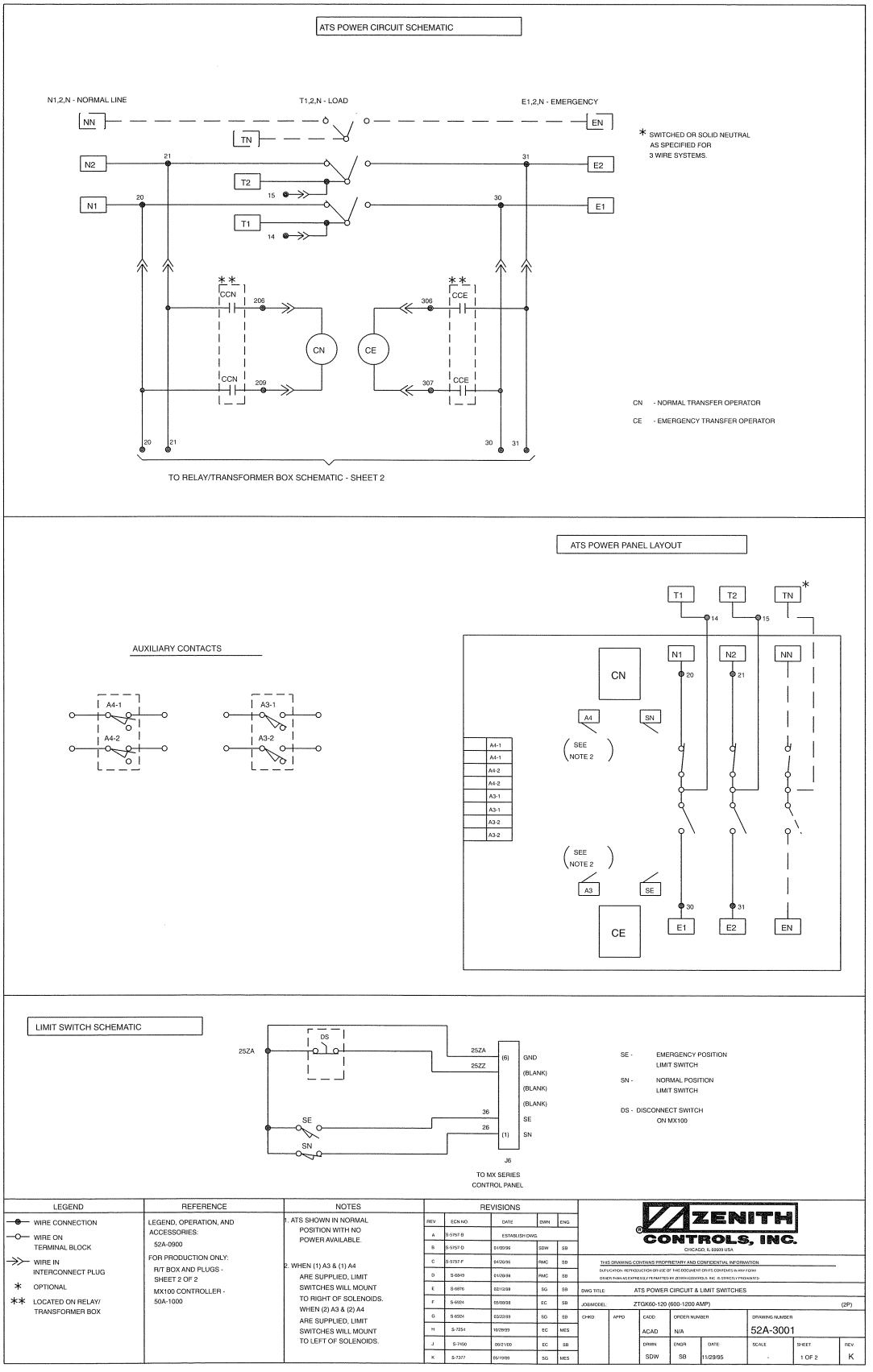

LEGEND	REFERENCE	NOTES
WIRE CONNECTION WIRE ON TERMINAL BLOCK WIRE IN INTERCONNECT PLUG * OPTIONAL ** LOCATED ON RELAY/ TRANSFORMER BOX	LEGEND, OPERATION, AND ACCESSORIES: 52A-0900 FOR PRODUCTION ONLY: R/T BOX AND PLUGS - SHEET 2 OF 2 MX100 CONTROLLER - 50A-1000	1. ATS SHOWN IN NORMAL POSITION WITH NO POWER AVAILABLE. 2. WHEN (1) A3 & (1) A4 ARE SUPPLIED, LIMIT SWITCHES WILL MOUNT TO RIGHT OF SOLENOIDS. WHEN (2) A3 & (2) A4 ARE SUPPLIED, LIMIT SWITCHES WILL MOUNT TO LEFT OF SOLENOIDS.

REVISIONS				
REV	ECN NO.	DATE	DWN	ENG
A	S-5757-B	ESTABLISH DWG.		
B	S-5757-D	01/02/96	SDW	SB
C	S-5757-F	04/26/96	RMC	SB
D	S-6849	01/29/98	RMC	SB
E	S-6976	02/12/98	SG	SB
F	S-6924	05/08/98	EC	SB
G	S-6924	03/22/99	SG	SB
H	S-7254	10/28/99	EC	MES
J	S-7456	05/21/00	EC	SB
K	S-7377	05/10/99	SG	MES

ZENITH CONTROLS, INC.
CHICAGO, IL 60693 USA

THIS DRAWING CONTAINS PROPRIETARY AND CONFIDENTIAL INFORMATION
DUPLICATION, REPRODUCTION OR USE OF THIS DOCUMENT OR ITS CONTENTS IN ANY FORM OTHER THAN AS EXPRESSLY PERMITTED BY ZENITH CONTROLS, INC. IS STRICTLY PROHIBITED.

DWG TITLE:	ATS POWER CIRCUIT & LIMIT SWITCHES					
JOB/MODEL:	ZTGK60-120 (600-1200 AMP)					(2P)
CHKD	APPD	CADD: ACAD	ORDER NUMBER: N/A	DRAWING NUMBER: 52A-3001		
		DRWN: SDW	ENGR: SB	DATE: 11/29/95	SCALE: -	SHEET: 1 OF 2	REV: K

Katolight Service - Master Repair Manual - Page 4500

Drawing #52A-3001, Page 2

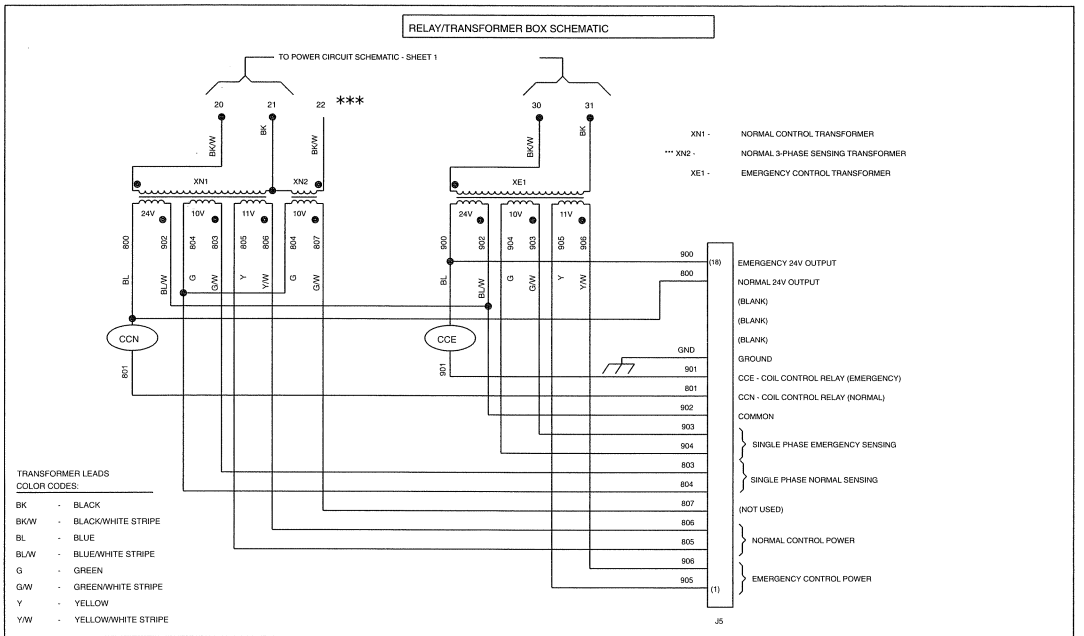

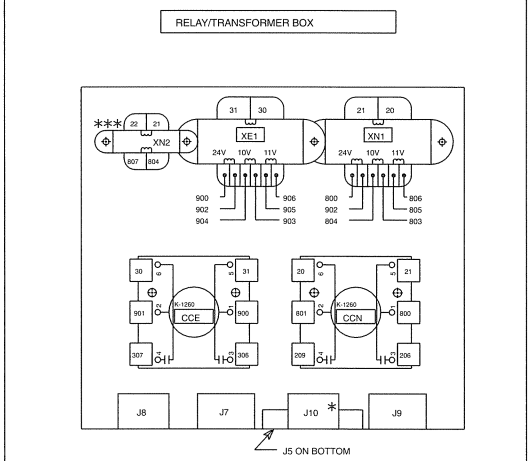

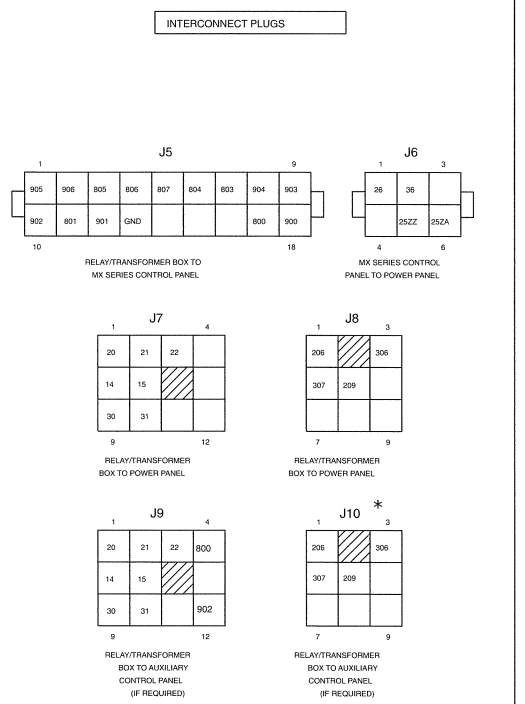

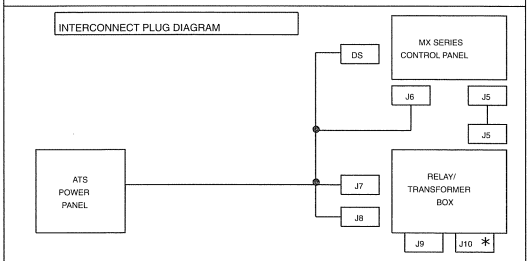

LEGEND

- WIRE CONNECTION
- * OPTIONAL
- *** WIRE #22 REMAINS WIRED IN RELAY/ TRANSFORMER BOX. WIRE #22 IS NOT CONNECTED TO ATS POWER PANEL.

NOTES

REVISIONS

REV.	ECN NO.	DATE	DWN.	ENG.
A	S-5757-B	ESTABLISH DWG.		
B	S-5757-D	01/03/96	SDW	SB
C	S-5757-F	04/26/96	RMC	SB
D	S-6849	01/28/98	RMC	SB
E	S-6876	02/12/98	SG	SB
F	S-6924	05/08/98	EC	SB
G	S-7167	03/23/99	SG	SB
H	S-7254	10/26/99	EC	MES
J	S-7456	06/21/00	EC	SB
K	S-7377	04/27/00	SG	MES

ZENITH CONTROLS, INC.
CHICAGO, IL 60659 USA

THIS DRAWING CONTAINS PROPRIETARY AND CONFIDENTIAL INFORMATION.
DUPLICATION, REPRODUCTION OR USE OF THIS DOCUMENT OR ITS CONTENTS IN ANY FORM
OTHER THAN AS EXPRESSLY PERMITTED BY ZENITH CONTROLS INC. IS STRICTLY PROHIBITED

DWG TITLE:	RELAY/XFR BOX & INTERCONNECT PLUGS
JOB/MODEL:	ZTGK60-120 (600-1200 AMP) (2P)
CHKD:	APPD:
CADD:	ACAD
ORDER NUMBER:	N/A
DRAWING NUMBER:	52A-3001
DRWN:	SDW
ENGR:	SB
DATE:	11/29/95
SCALE:	-
SHEET:	2 OF 2
REV	K

Katolight Service - Master Repair Manual - Page 4501

Drawing #52A-8000, Page 1

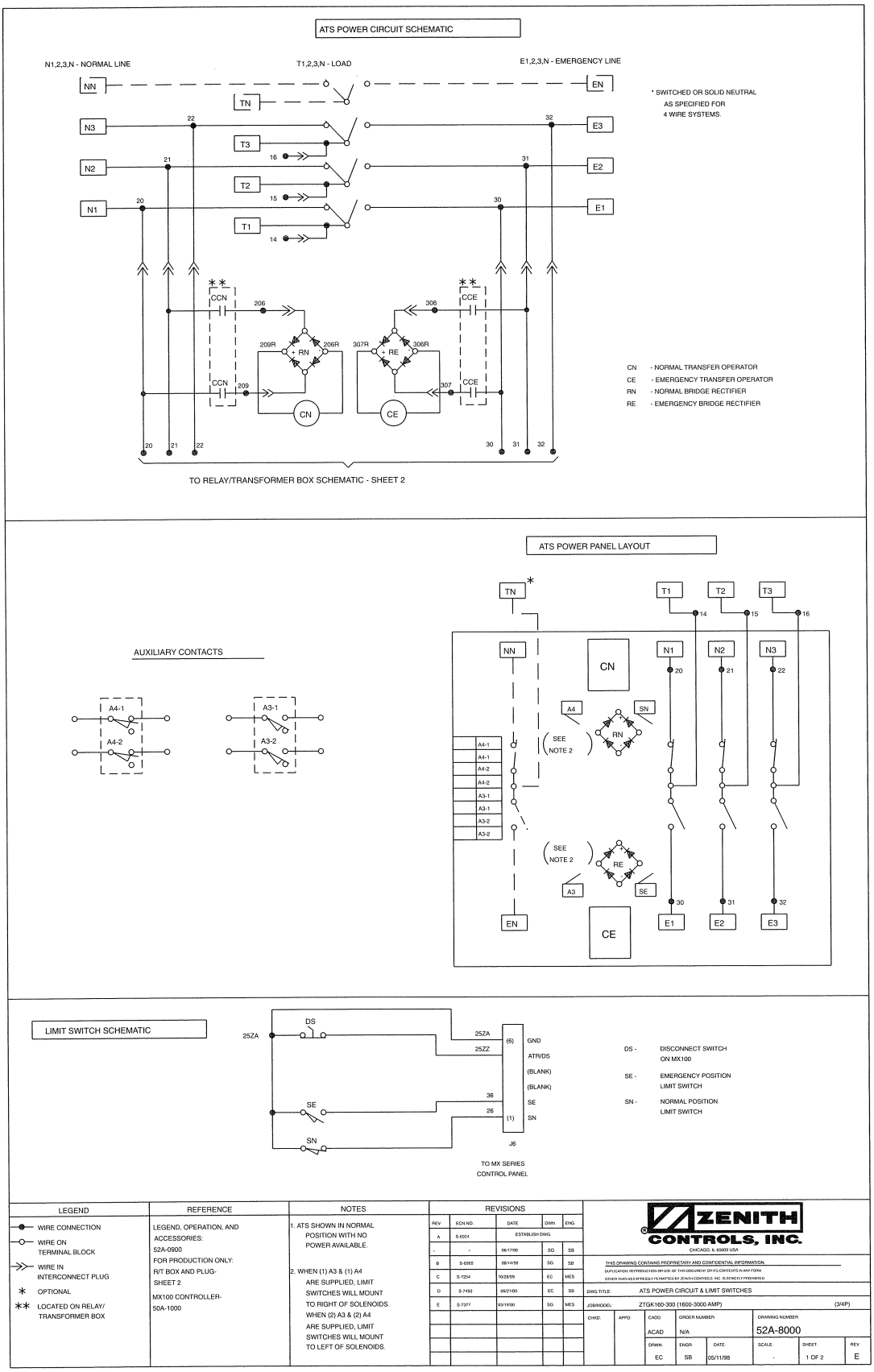

LEGEND	REFERENCE	NOTES
WIRE CONNECTION WIRE ON TERMINAL BLOCK WIRE IN INTERCONNECT PLUG * OPTIONAL ** LOCATED ON RELAY/ TRANSFORMER BOX	LEGEND, OPERATION, AND ACCESSORIES: 52A-0900 FOR PRODUCTION ONLY: R/T BOX AND PLUG- SHEET 2 MX100 CONTROLLER- 50A-1000	1. ATS SHOWN IN NORMAL POSITION WITH NO POWER AVAILABLE. 2. WHEN (1) A3 & (1) A4 ARE SUPPLIED, LIMIT SWITCHES WILL MOUNT TO RIGHT OF SOLENOIDS. WHEN (2) A3 & (2) A4 ARE SUPPLIED, LIMIT SWITCHES WILL MOUNT TO LEFT OF SOLENOIDS.

REVISIONS				
REV.	ECN NO.	DATE	DWN	ENG.
A	S-6924	ESTABLISH DWG.		
-	-	06/17/98	SG	SB
B	S-6969	06/18/98	SG	SB
C	S-7254	10/28/98	EC	MES
D	S-7459	04/21/00	EC	SB
E	S-7377	05/19/00	SG	MES

ZENITH CONTROLS, INC.
CHICAGO, IL 60659 USA

THIS DRAWING CONTAINS PROPRIETARY AND CONFIDENTIAL INFORMATION.
DUPLICATION, REPRODUCTION OR USE OF THIS DOCUMENT OR ITS CONTENTS IN ANY FORM OTHER THAN AS EXPRESSLY PERMITTED BY ZENITH CONTROLS, INC. IS STRICTLY PROHIBITED

DWG TITLE:	ATS POWER CIRCUIT & LIMIT SWITCHES				
JOB/MODEL:	ZTGK 160-300 (1600-3000 AMP)				(3/4P)
CHKD:	APPD:	CADD: ACAD	ORDER NUMBER: N/A	DRAWING NUMBER: 52A-8000	
		DRWN: EC	ENGR: SB	DATE: 05/11/98	SCALE: -
					SHEET: 1 OF 2
					REV: E

Katolight Service - Master Repair Manual - Page 4502

Drawing #52A-8000, Page 2

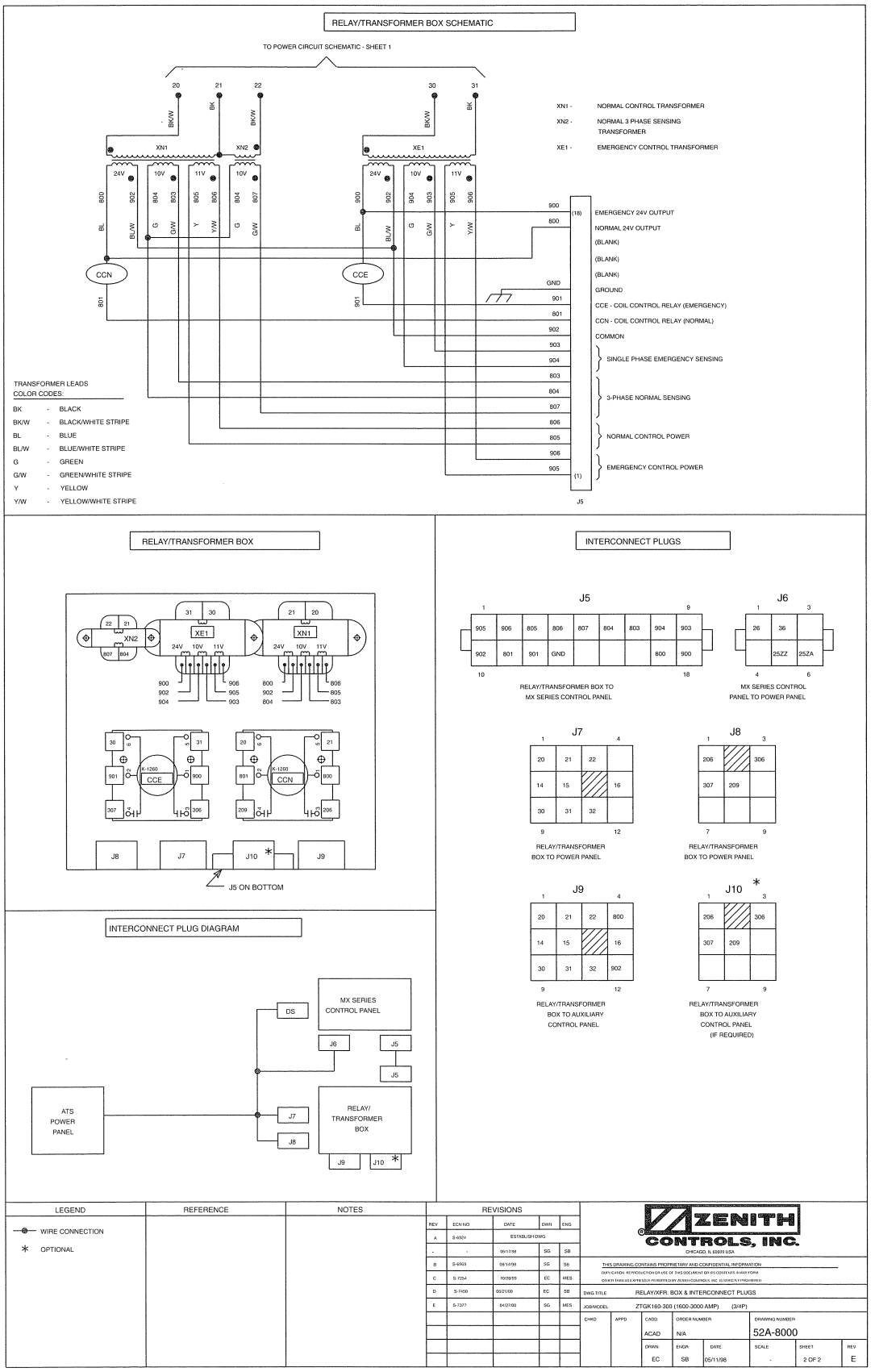

Katolight Service - Master Repair Manual - Page 4503

Drawing #52A-8001, Page 1

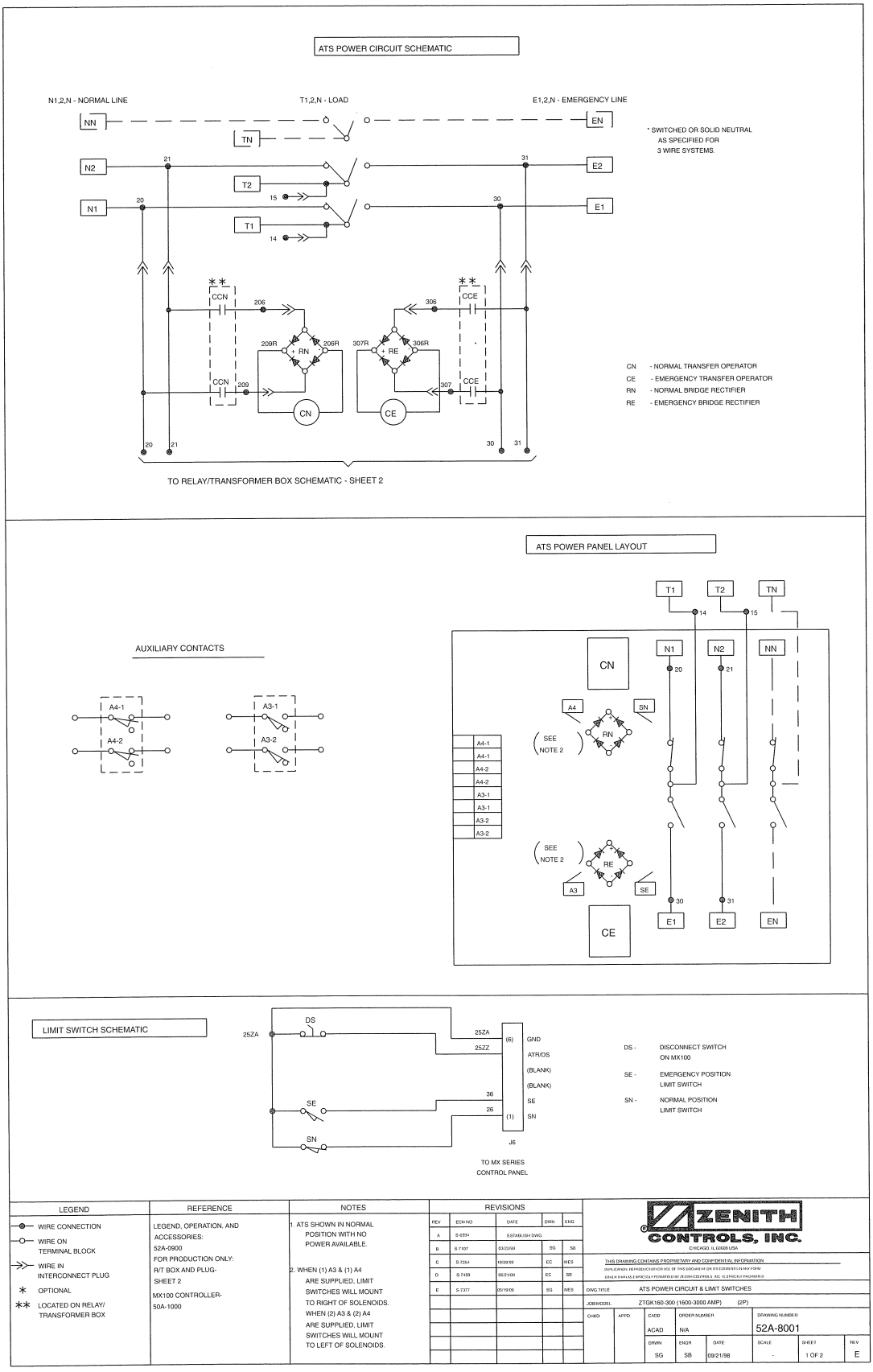

LEGEND	REFERENCE	NOTES
WIRE CONNECTION WIRE ON TERMINAL BLOCK WIRE IN INTERCONNECT PLUG * OPTIONAL ** LOCATED ON RELAY/ TRANSFORMER BOX	LEGEND, OPERATION, AND ACCESSORIES: 52A-0900 FOR PRODUCTION ONLY: R/T BOX AND PLUG- SHEET 2 MX100 CONTROLLER- 50A-1000	1. ATS SHOWN IN NORMAL POSITION WITH NO POWER AVAILABLE. 2. WHEN (1) A3 & (1) A4 ARE SUPPLIED, LIMIT SWITCHES WILL MOUNT TO RIGHT OF SOLENOIDS. WHEN (2) A3 & (2) A4 ARE SUPPLIED, LIMIT SWITCHES WILL MOUNT TO LEFT OF SOLENOIDS.

REVISIONS				
REV	ECN NO	DATE	DWN	ENG
A	S-0334	ESTABLISH DWG.		
B	S-7107	03/20/99	SG	SB
C	S-7254	10/29/99	EC	MES
D	S-7458	06/21/00	EC	SB
E	S-7377	05/19/00	SG	MES

ZENITH CONTROLS, INC.
CHICAGO, IL 60639 USA

THIS DRAWING CONTAINS PROPRIETARY AND CONFIDENTIAL INFORMATION
SUPPLIED IN PRODUCTION ONLY. USE OF THIS DRAWING OR ITS CONTENTS IN ANY FORM OTHER THAN AS SPECIFICALLY PERMITTED BY ZENITH CONTROLS, INC. IS STRICTLY PROHIBITED

DWG TITLE	ATS POWER CIRCUIT & LIMIT SWITCHES					
JOB MODEL	ZTGK160-300 (1600-3000 AMP) (2P)					
CHK'D	APP'D	CAD'D	ORDER NUMBER	DRAWING NUMBER		
		ACAD	N/A	52A-8001		
		DRWN	ENGR	DATE	SCALE	SHEET	REV
		SG	SB	09/21/98	-	1 OF 2	E

Katolight Service - Master Repair Manual - Page 4504

Drawing #52A-8001, Page 2

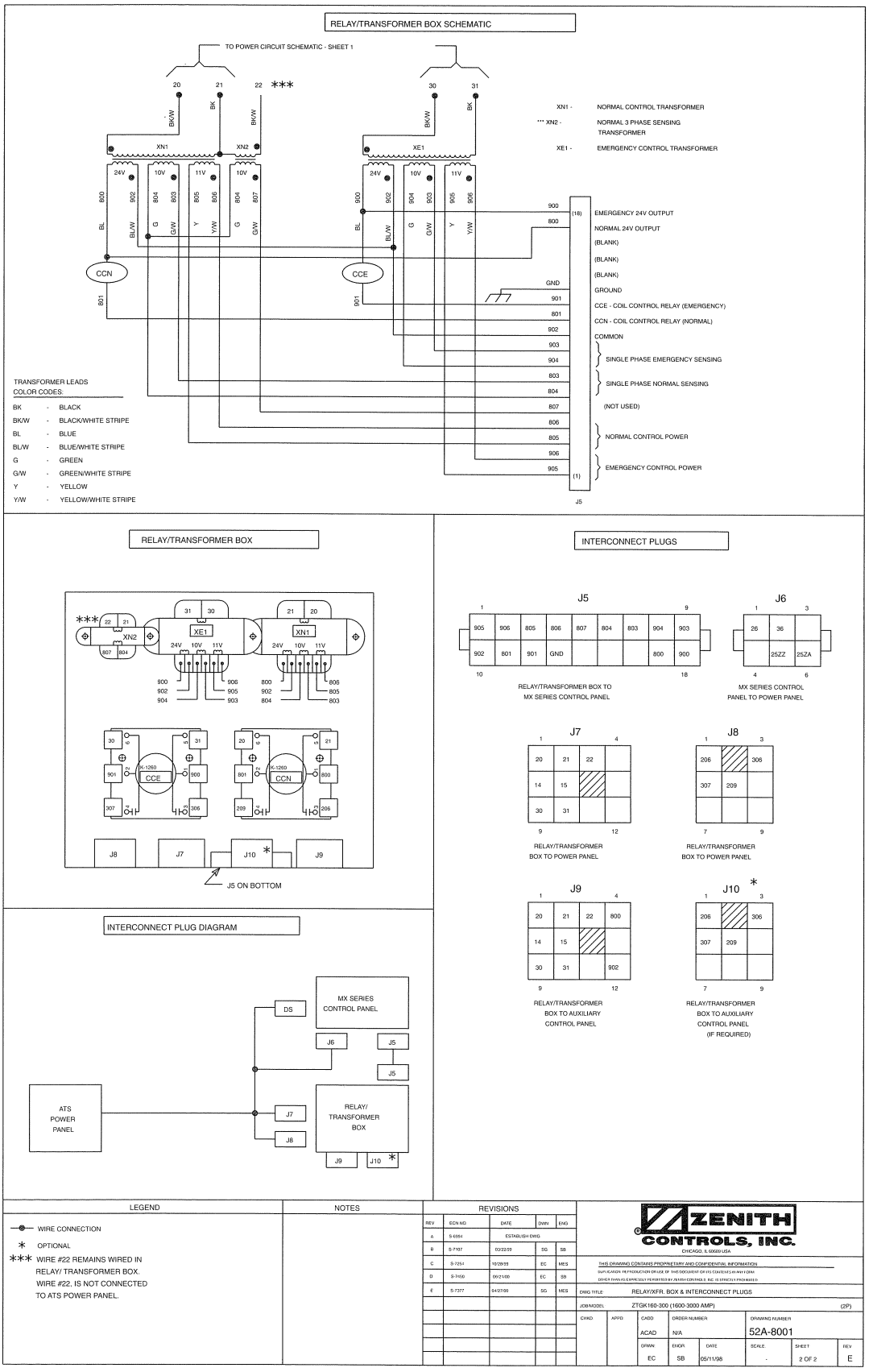

LEGEND

- WIRE CONNECTION
- * OPTIONAL
- *** WIRE #22 REMAINS WIRED IN RELAY/ TRANSFORMER BOX. WIRE #22, IS NOT CONNECTED TO ATS POWER PANEL.

NOTES

REVISIONS

REV	ECN NO	DATE	DWN	ENG
A	S-6984	ESTABLISH DWG.		
B	S-7107	03/22/99	SG	SB
C	S-7254	10/28/99	EC	MES
D	S-7450	09/21/00	EC	SB
E	S-7377	04/27/99	SG	MES

ZENITH CONTROLS, INC.
CHICAGO, IL 60629 USA

THIS DRAWING CONTAINS PROPRIETARY AND CONFIDENTIAL INFORMATION
DUPLICATION, REPRODUCTION OR USE OF THIS DOCUMENT OR ITS CONTENTS IN ANY FORM, EITHER THAN AS EXPRESSLY PERMITTED BY ZENITH CONTROLS, INC. IS STRICTLY PROHIBITED

DWG TITLE	RELAY/XFR. BOX & INTERCONNECT PLUGS
JOB/MODEL	ZTGK160-300 (1600-3000 AMP) (2P)
CHKD	APPD
CADD	ACAD
ORDER NUMBER	N/A
DRAWING NUMBER	52A-8001
DRWN	EC
ENGR	SB
DATE	05/11/98
SCALE	-
SHEET	2 OF 2
REV	E

Katolight Service - Master Repair Manual - Page 4505

Drawing #52A-4000, Page 1

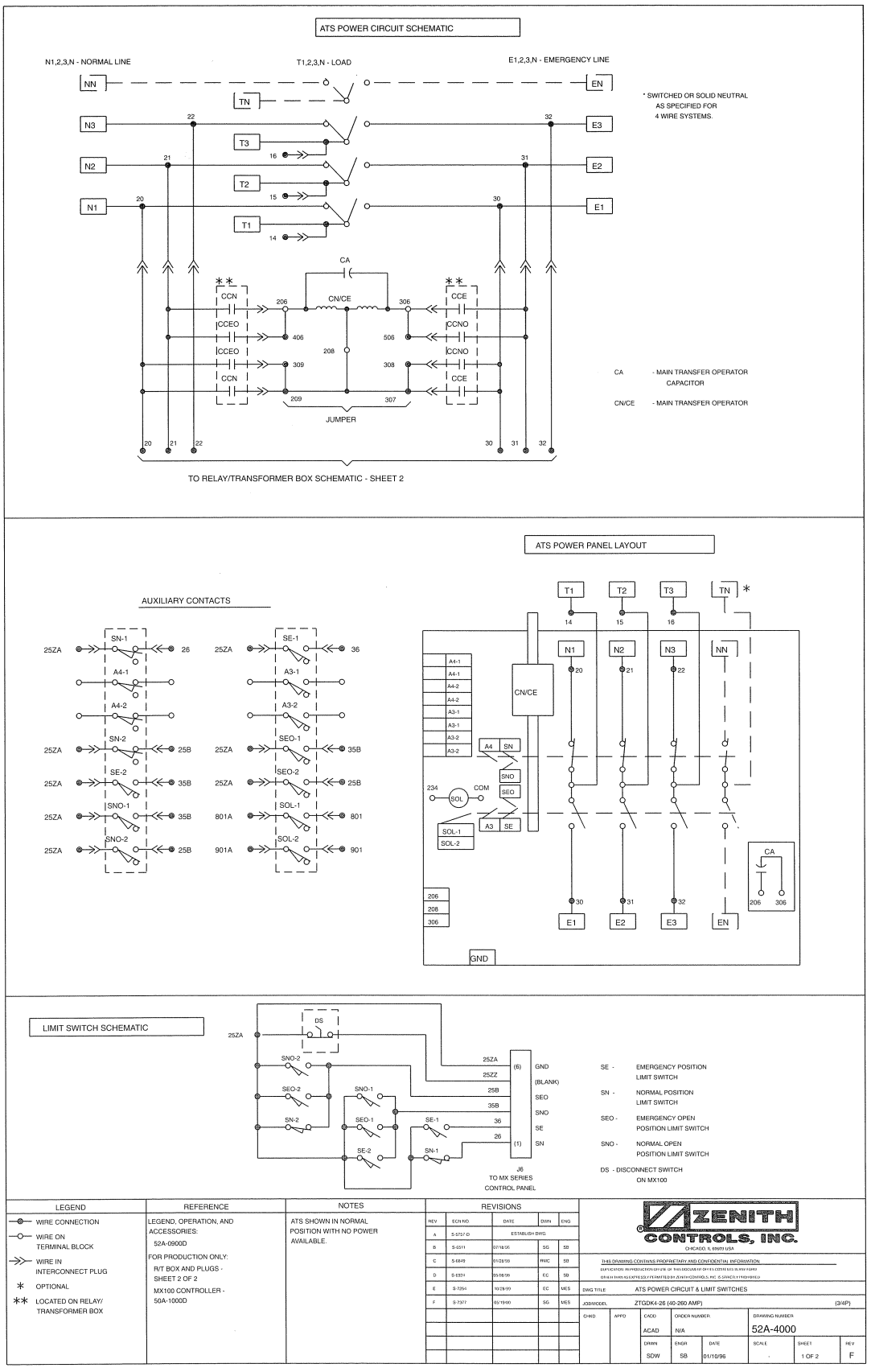

Katolight Service - Master Repair Manual - Page 4506

Drawing #52A-4000, Page 2

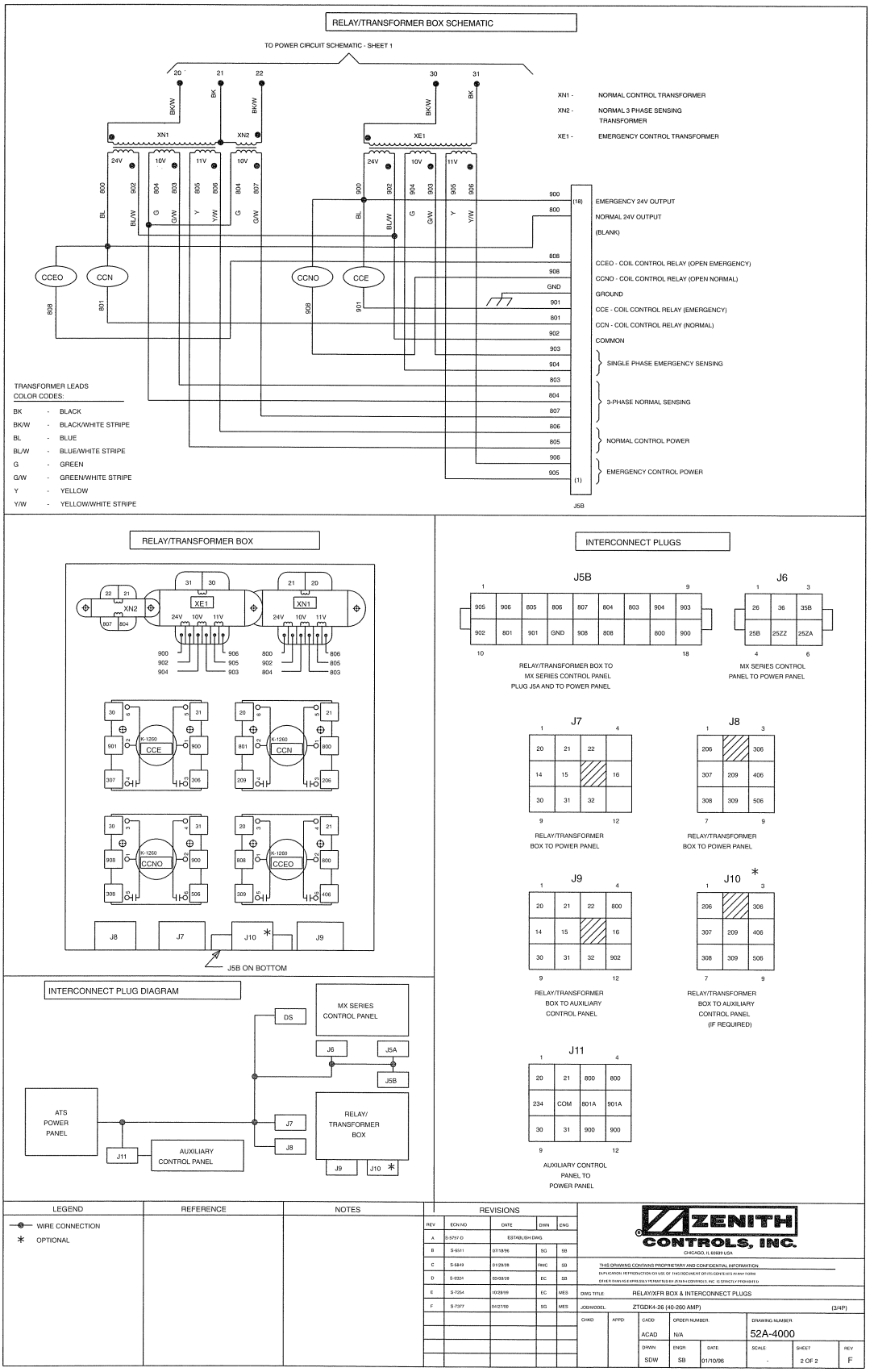

Katolight Service - Master Repair Manual - Page 4507

Drawing #52A-4001, Page 1

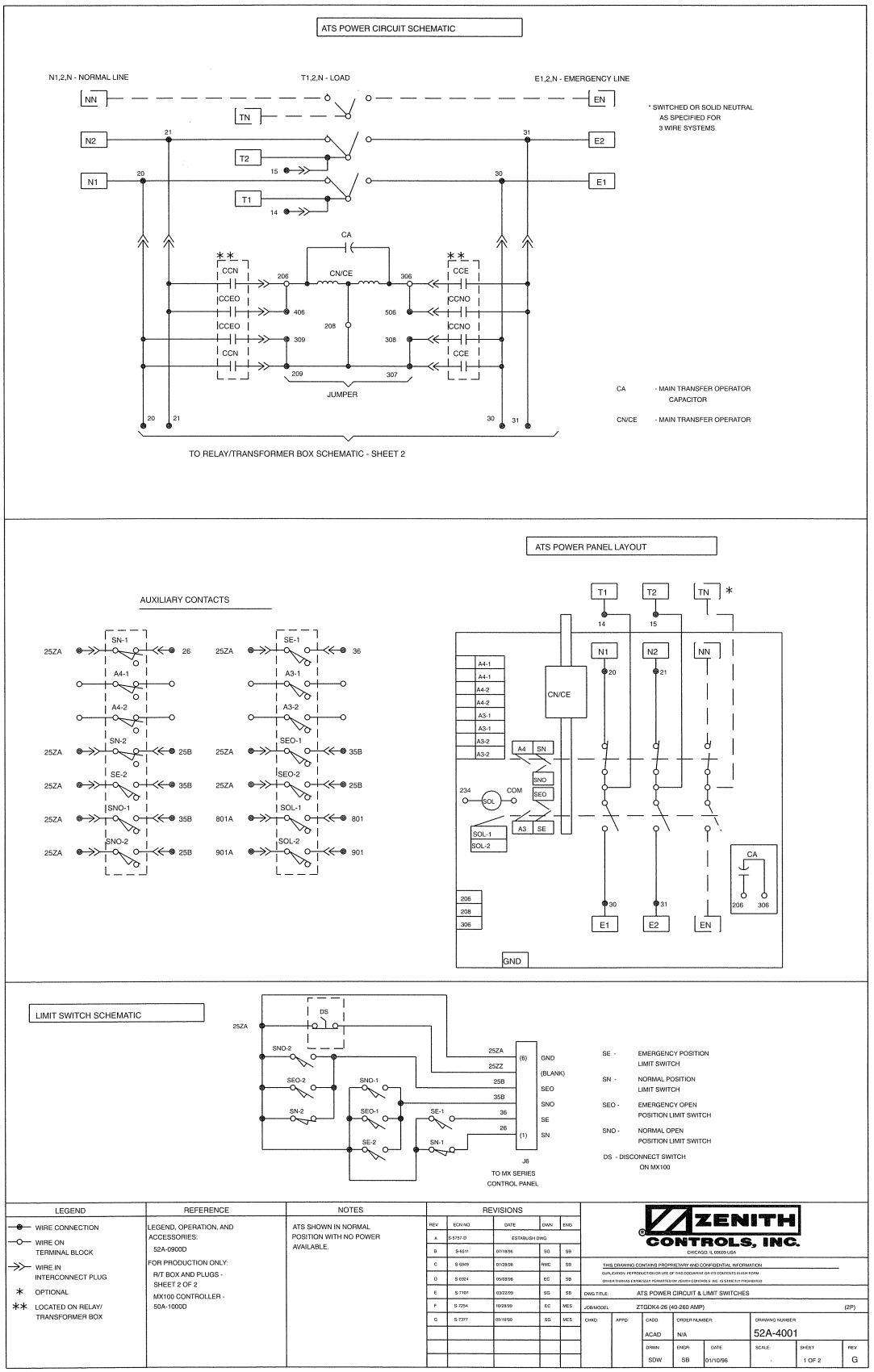

Katolight Service - Master Repair Manual - Page 4508

Drawing #52A-4001, Page 2

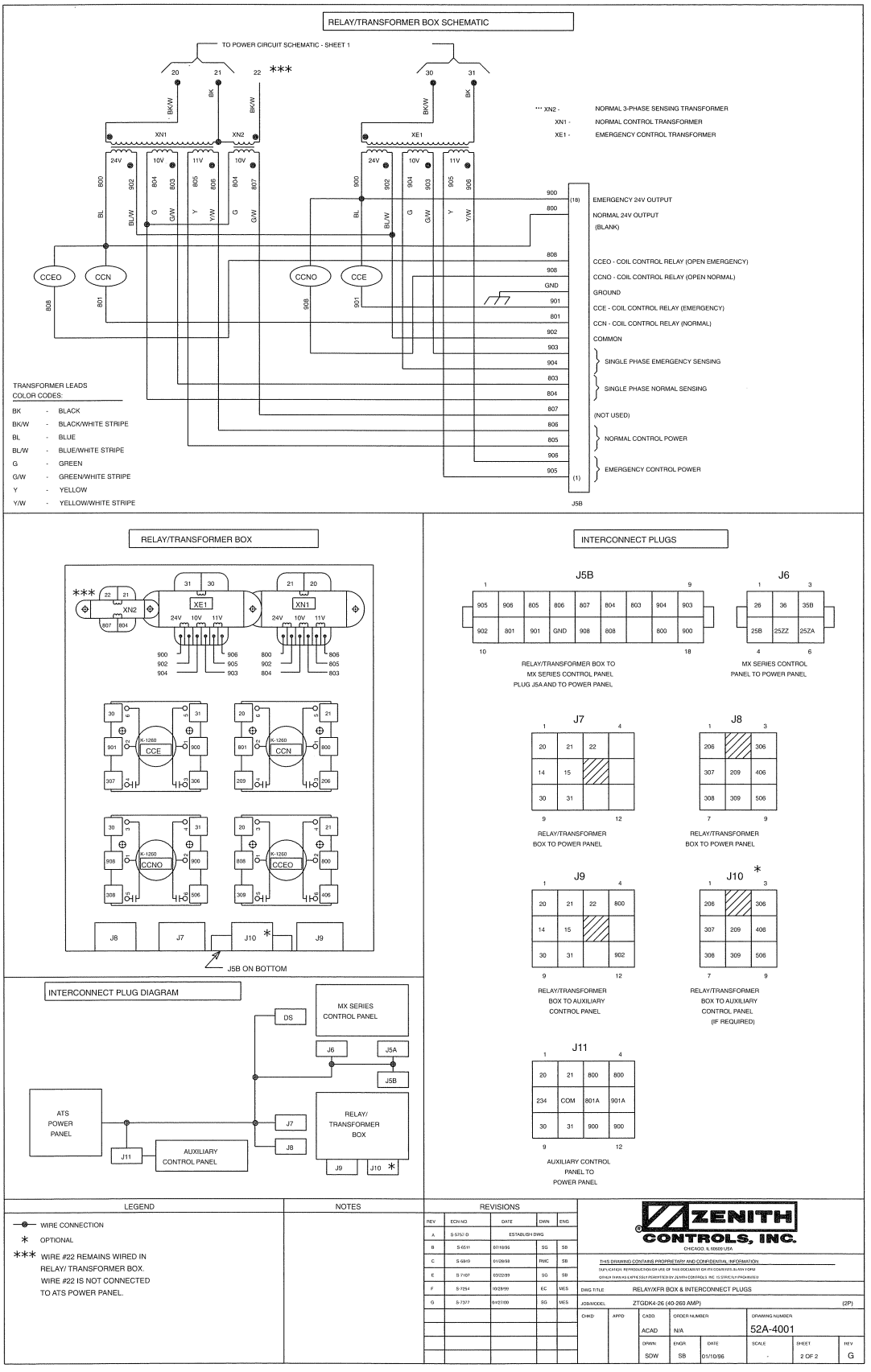

Katolight Service - Master Repair Manual - Page 4509

Drawing #52A-5000, Page 1

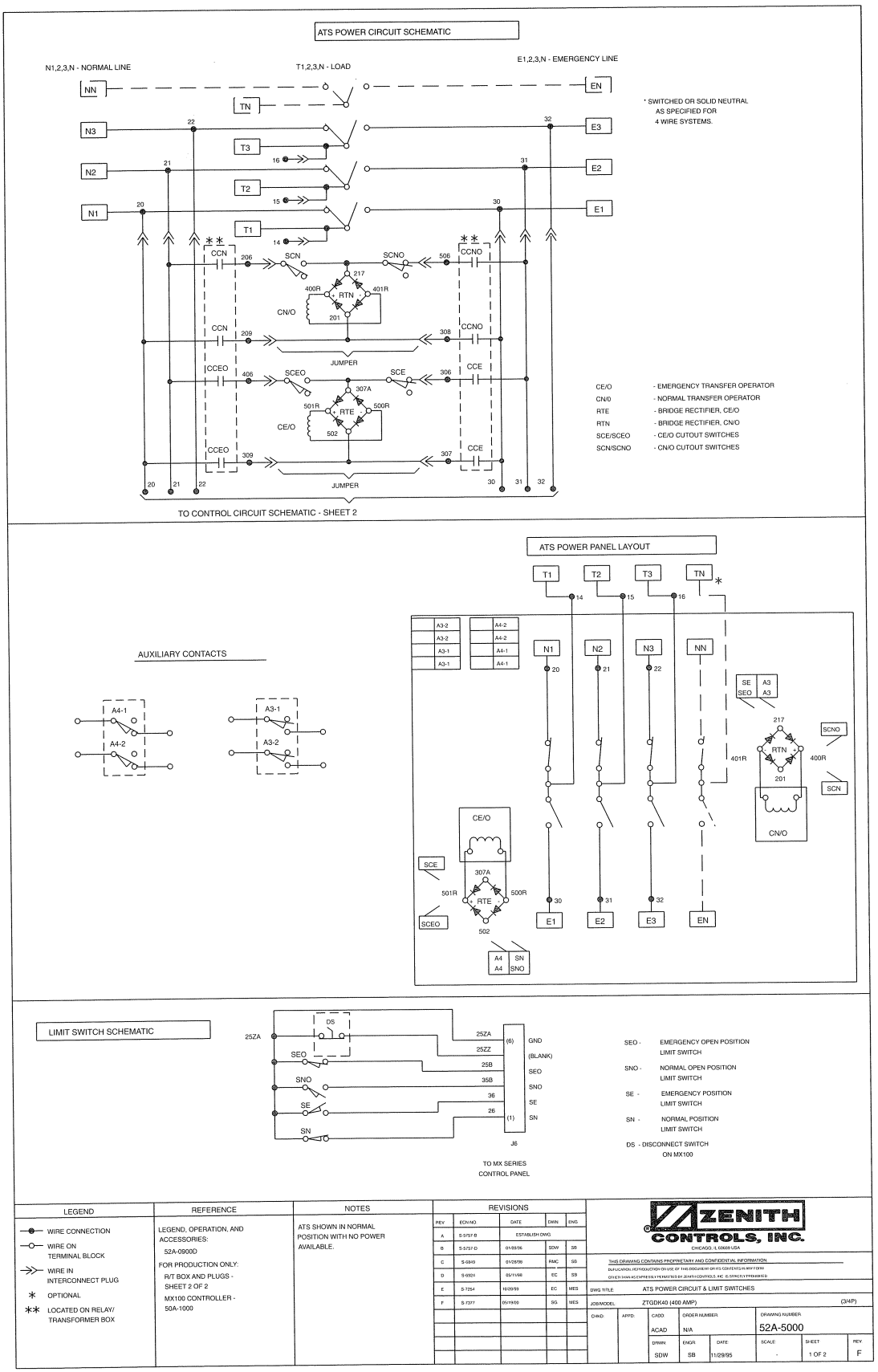

LEGEND	REFERENCE	NOTES
WIRE CONNECTION WIRE ON TERMINAL BLOCK WIRE IN INTERCONNECT PLUG * OPTIONAL ** LOCATED ON RELAY/ TRANSFORMER BOX	LEGEND, OPERATION, AND ACCESSORIES: 52A-0900D FOR PRODUCTION ONLY: R/T BOX AND PLUGS - SHEET 2 OF 2 MX100 CONTROLLER - 50A-1000	ATS SHOWN IN NORMAL POSITION WITH NO POWER AVAILABLE.

REVISIONS				
REV	ECN NO.	DATE	DWN	ENG
A	S-5757-B	ESTABLISH DWG		
B	S-5757-D	01/09/96	SDW	SB
C	S-5849	01/28/99	RMC	SB
D	S-6924	05/11/98	EC	SB
E	S-7254	10/28/99	EC	MES
F	S-7377	05/19/00	SG	MES

ZENITH CONTROLS, INC.
CHICAGO, IL 60659 USA

THIS DRAWING CONTAINS PROPRIETARY AND CONFIDENTIAL INFORMATION.
DUPLICATION, REPRODUCTION OR USE OF THIS DOCUMENT OR ITS CONTENTS IN ANY FORM BY ANY MEANS EXPRESSLY PERMITTED BY ZENITH CONTROLS, INC. IS STRICTLY PROHIBITED.

DWG TITLE:	ATS POWER CIRCUIT & LIMIT SWITCHES				
JOB/MODEL:	ZTGDK40 (400 AMP)				(3/4P)
DWN'D:	APP'D:	CADD: ACAD	ORDER NUMBER: N/A	DRAWING NUMBER: 52A-5000	
		DRWN: SDW	ENGR: SB	DATE: 11/29/95	SCALE: -
					SHEET: 1 OF 2
					REV: F

Katolight Service - Master Repair Manual - Page 4510

Drawing #52A-5000, Page 2

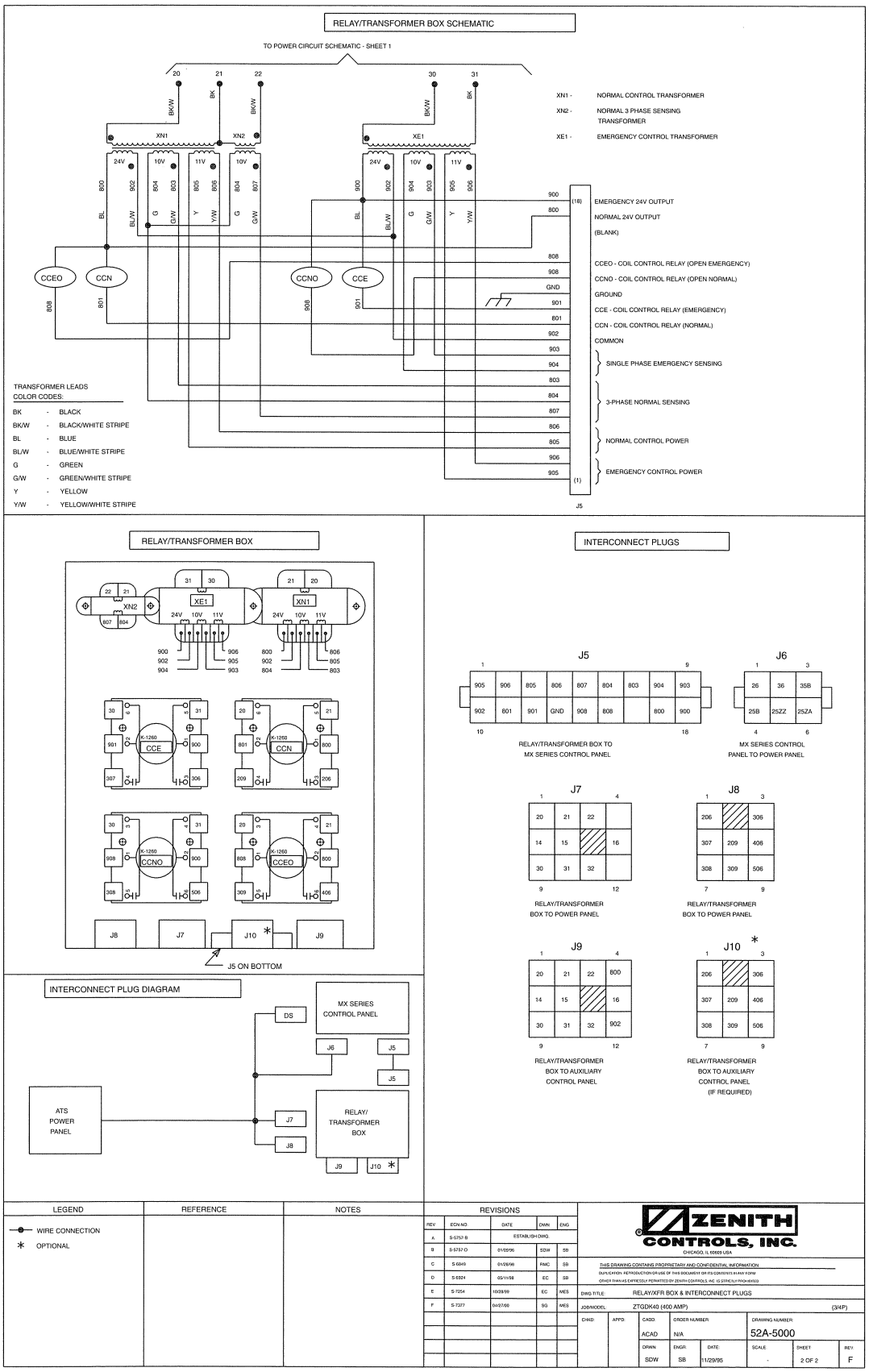

LEGEND	REFERENCE	NOTES
WIRE CONNECTION		
* OPTIONAL		

REVISIONS

REV	ECN NO.	DATE	DWN	ENG
A	S-5757-B	ESTABLISHED DWG.		
B	S-5757-D	01/05/96	SDW	SB
C	S-6849	01/29/96	RMC	SB
D	S-6924	05/11/98	EC	SB
E	S-7254	10/28/99	EC	MES
F	S-7277	04/07/00	SG	MES

ZENITH CONTROLS, INC.
CHICAGO, IL 60609 USA

THIS DRAWING CONTAINS PROPRIETARY AND CONFIDENTIAL INFORMATION
DUPLICATION, REPRODUCTION OR USE OF THIS DOCUMENT OR ITS CONTENTS IN ANY COPY OTHER THAN AS EXPRESSLY PERMITTED BY ZENITH CONTROLS, INC. IS STRICTLY PROHIBITED

DWG TITLE: RELAY/XFR BOX & INTERCONNECT PLUGS

JOB/MODEL: ZTGDK40 (400 AMP) (3/4P)

CHKD:	APP'D:	CADD:	ORDER NUMBER:	DRAWING NUMBER:
		ACAD	N/A	52A-5000

DRWN:	ENGR:	DATE:	SCALE:	SHEET:	REV:
SDW	SB	11/29/95	-	2 OF 2	F

Katolight Service - Master Repair Manual - Page 4511

Drawing #52A-5001, Page 1

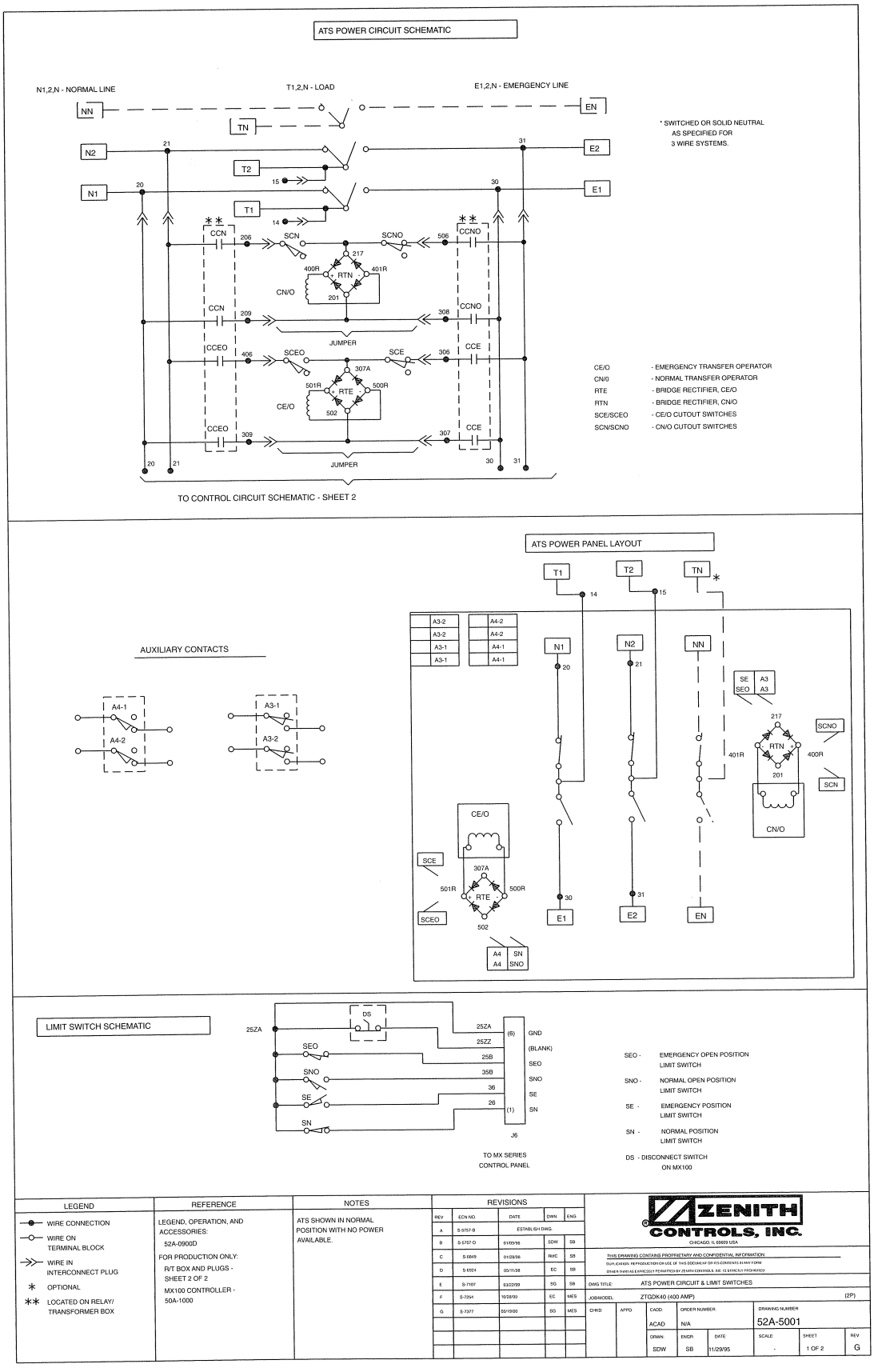

Katolight Service - Master Repair Manual - Page 4512

Drawing #52A-5001, Page 2

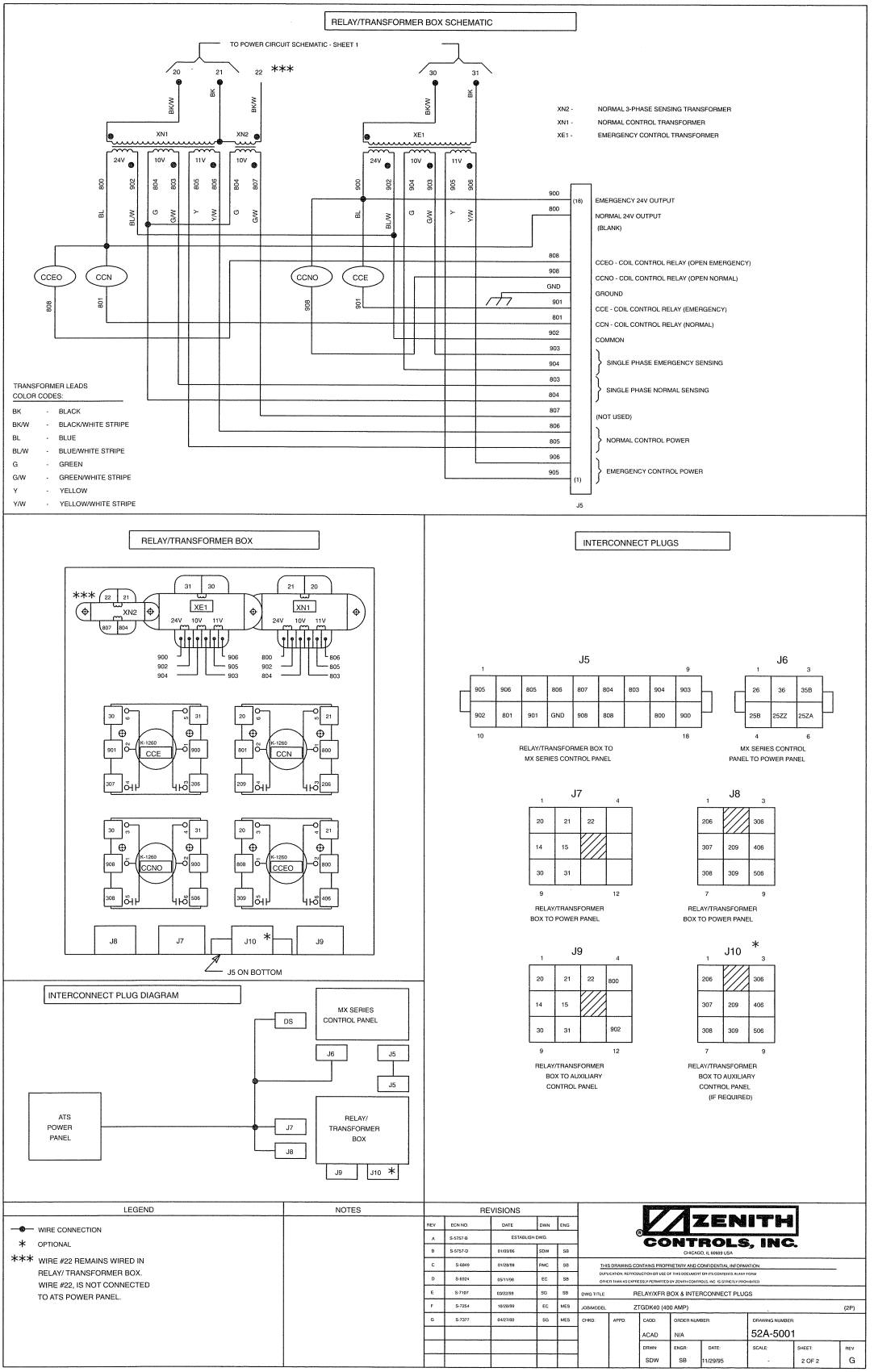

Katolight Service - Master Repair Manual - Page 4513

Drawing #52A-6000, Page 1

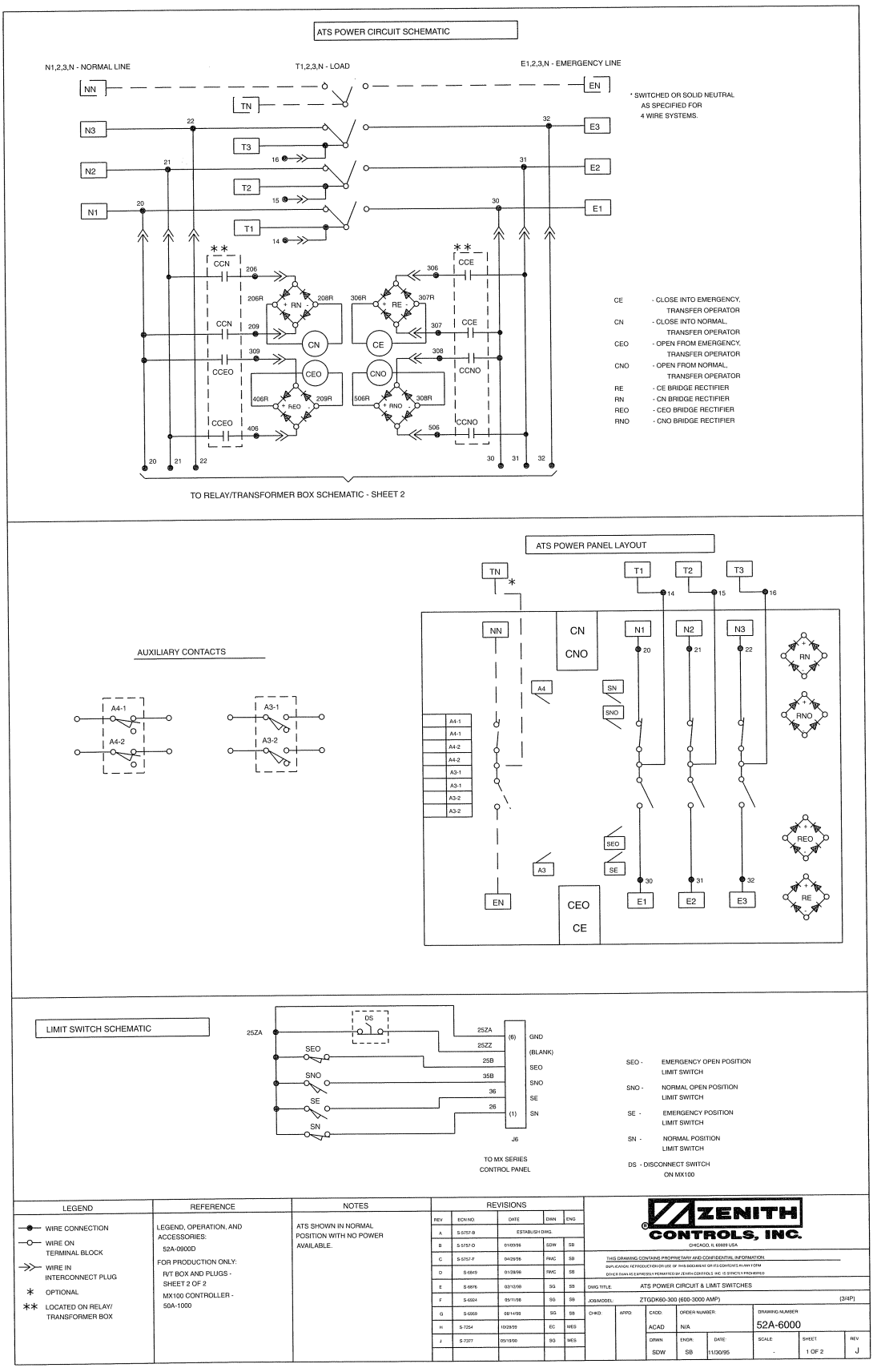

Katolight Service - Master Repair Manual - Page 4514

Drawing #52A-6000, Page 2

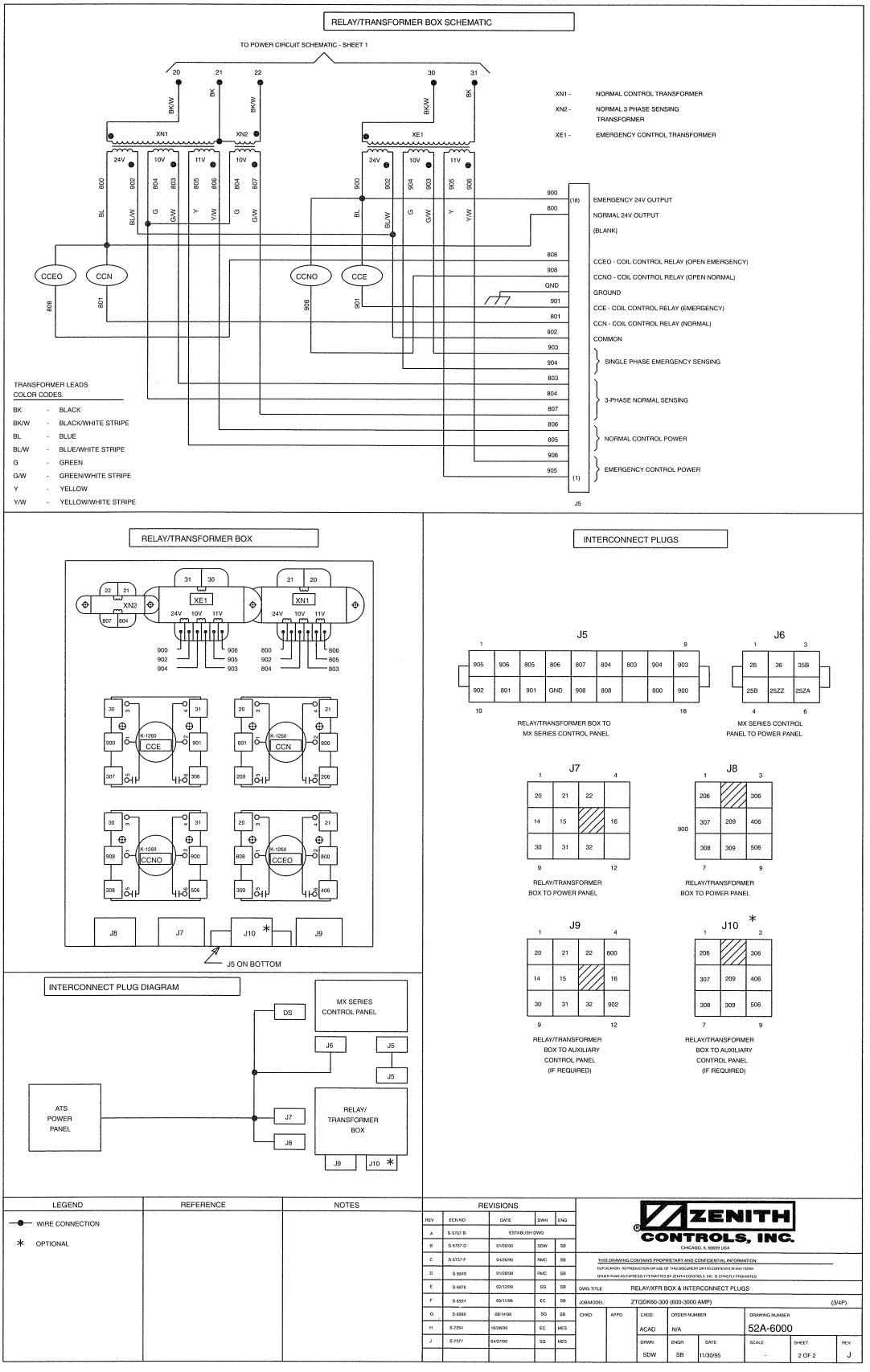

LEGEND	REFERENCE	NOTES
WIRE CONNECTION		
* OPTIONAL		

REVISIONS

REV	ECN NO	DATE	DWN	ENG
A	S-5757-B	ESTABLISH DWG		
B	S-5757-D	01/05/95	SDW	SB
C	S-5757-F	04/26/95	RMC	SB
D	S-6045	01/25/96	RMC	SB
E	S-6676	02/12/96	SG	SB
F	S-6924	05/11/96	EC	SB
G	S-6969	08/14/96	SG	SB
H	S-7254	10/28/96	EC	MES
J	S-7377	04/27/00	SG	MES

ZENITH CONTROLS, INC.
CHICAGO, IL 60609 USA

THIS DRAWING CONTAINS PROPRIETARY AND CONFIDENTIAL INFORMATION.
DUPLICATION, REPRODUCTION OR USE OF THIS DOCUMENT OR ITS CONTENTS IN ANY FORM OTHER THAN AS EXPRESSLY PERMITTED BY ZENITH CONTROLS, INC. IS STRICTLY PROHIBITED

DWG TITLE:	RELAY/XFR BOX & INTERCONNECT PLUGS				
JOB MODEL:	ZTGDX60-300 (600-3000 AMP)				(3/4P)
CHKD:	APPD:	CADD: ACAD	ORDER NUMBER: N/A	DRAWING NUMBER: 52A-6000	
		DRWN: SDW	ENGR: SB	DATE: 11/30/95	SCALE: -
					SHEET: 2 OF 2
					REV: J

Katolight Service - Master Repair Manual - Page 4515

Drawing #52A-6001, Page 1

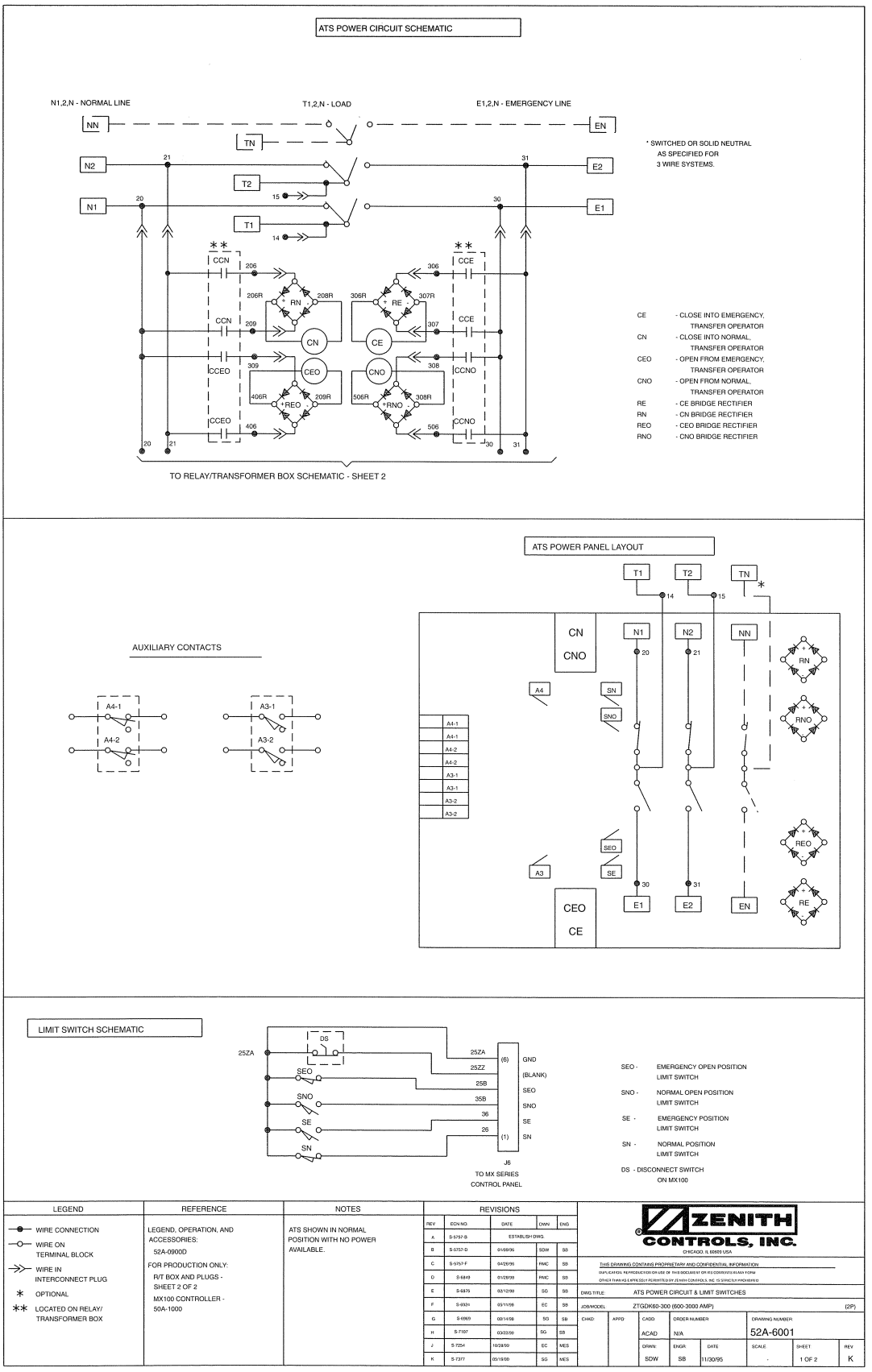

Katolight Service - Master Repair Manual - Page 4516

Drawing #52A-6001, Page 2

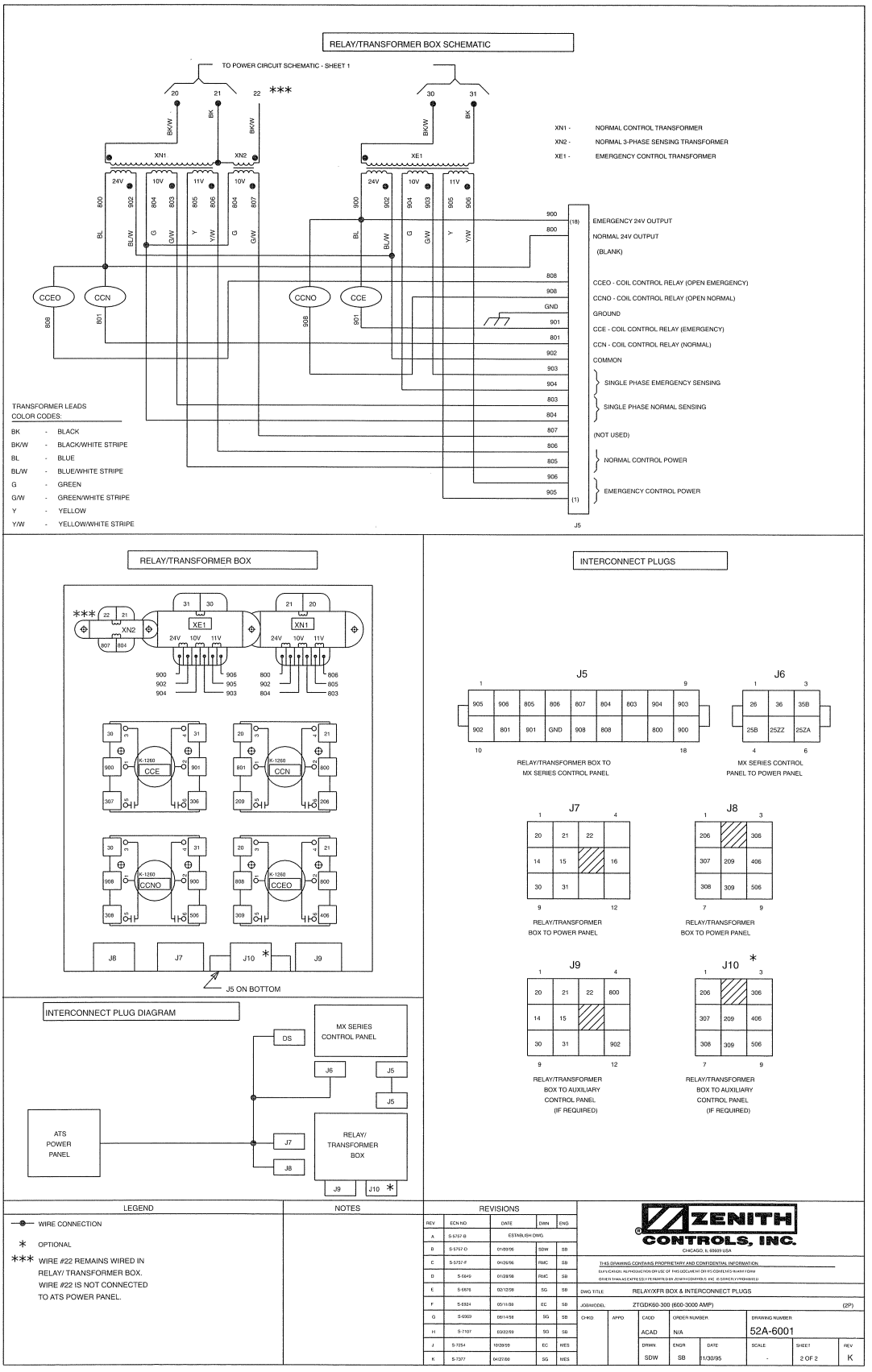

LEGEND

- WIRE CONNECTION
- * OPTIONAL
- *** WIRE #22 REMAINS WIRED IN RELAY/ TRANSFORMER BOX. WIRE #22 IS NOT CONNECTED TO ATS POWER PANEL.

NOTES

REVISIONS

REV	ECN NO.	DATE	DRN	ENG
A	S-5757-B	ESTABLISH DWG.		
B	S-5757-D	01/09/96	SDW	SB
C	S-5757-F	04/26/96	RMC	SB
D	S-6649	01/28/98	RMC	SB
E	S-6676	02/12/98	SG	SB
F	S-6924	05/11/99	EC	SB
G	S-6969	08/14/98	SG	SB
H	S-7107	03/03/99	SG	SB
J	S-7254	10/26/99	EC	MES
K	S-7377	04/27/00	SG	MES

ZENITH CONTROLS, INC.
CHICAGO, IL 60609 USA

THIS DRAWING CONTAINS PROPRIETARY AND CONFIDENTIAL INFORMATION.
ENTIRE/PARTIAL REPRODUCTION OR USE OF THIS DOCUMENT OR ITS CONTENTS IN ANY FORM OTHER THAN AS EXPRESSLY PERMITTED BY ZENITH CONTROLS, INC. IS STRICTLY PROHIBITED

DWG TITLE:	RELAY/XFR BOX & INTERCONNECT PLUGS					
JOB/MODEL:	ZTGDK60-300 (600-3000 AMP)					(2P)
CHKD	APPD	CADD	ORDER NUMBER	DRAWING NUMBER		
		ACAD	N/A	52A-6001		
		DRWN	ENGR	DATE	SCALE	SHEET / REV
		SDW	SB	11/30/95	-	2 OF 2 / K

Katolight Service - Master Repair Manual - Page 4517

Drawing #50R-1012, Page 1

LEGEND:

RA6N ..... Normal Presignal Relay...24VAC. Relay...K-1232; Base K-1228
RA6E..... Emergency Presignal Relay...24VAC...K-1232; Base K-1228
TB..... Terminal Block ... Y610090
J8..... Plug-R/T Box
PS-5083...Pin male (Qty. 3)
PS-5084...Socket female (Qty. 3)
J11..... Plug...PS-5077...Pin housing 9 pt.
PS-5078...Socket receptacle 9 pt.
PS-5083...Pin male (Qty. 8)
PS-5084...Socket female (Qty. 8)
PS-5085...Polarization Key
MX100..... Delay Model with Presignal overlay/static shield assembly
R/T BOX... Standard ATS model

Relay/Transformer Box
CCE..... Control Relay, Close Emergency
CCN..... Control Relay, Close Normal
XE1..... Control Transformer, Emergency
XN1,XN2..... Control Transformer, Normal

Power Panel Limit Switches
A3R..... Auxiliary Contact-Emergency Position
A4R..... Auxiliary Contact-Normal Position
SE-1,2..... Emergency Position
SN-1,2..... Normal Position

Interconnect Plugs
J5A, J5B, J6, J7, J8, J11

OPERATION:

When Normal restores, A6 circuit opens (or T3/W3 circuit closes) (adjustable) until MX100 timer times out. The Normal transfer relay(s) picks up and closes its contacts to transfer the switch to Normal. A6 recloses (or T3/W3 circuit reopens).

When Normal fails, A6 circuit is open (or T3/W3 circuit closes) (adjustable) until MX100 timer times out. The Emergency transfer relay(s) picks up and closes its contacts to transfer the switch to Emergency. A6 recloses (or T3/W3 circuit reopens).

MX100 DIN RAIL

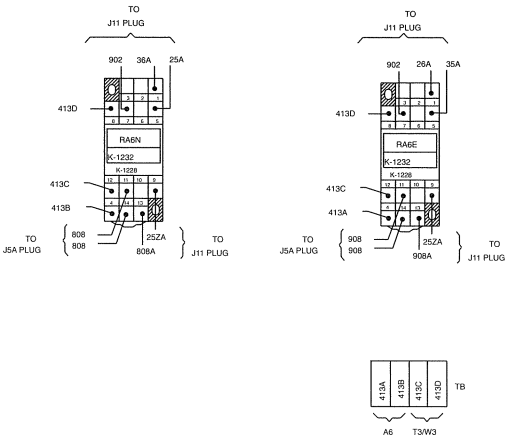

TYPICAL LIMIT SWITCHES ON POWER PANEL

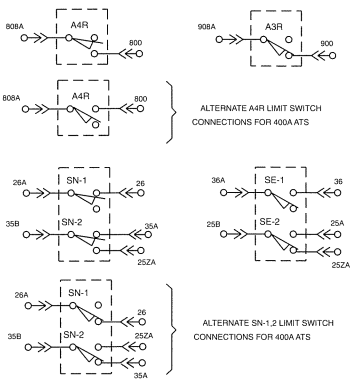

CONTROL RELAY SCHEMATIC

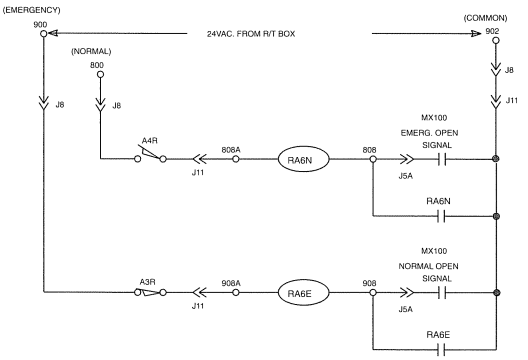

TYPICAL LIMIT SWITCH SCHEMATIC

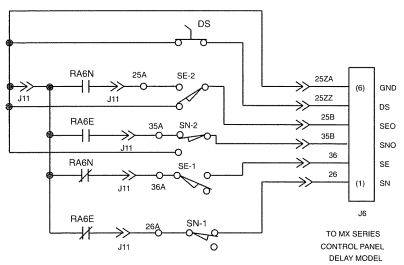

CUSTOMER CONNECTIONS

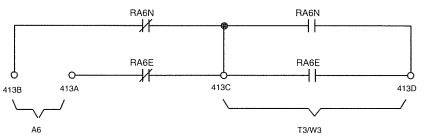

LEGEND	REFERENCE	NOTES
WIRE CONNECTION WIRE ON TERMINAL BLOCK WIRE IN INTERCONNECT PLUG	SEE ACCOMPANYING STANDARD ATS DIAGRAM FOR ATS POWER PANEL LAYOUT AND POWER CIRCUIT SCHEMATIC.	AT3 SHOWN IN NORMAL POSITION WITH NO POWER AVAILABLE.

REVISIONS				
RV	ECN NO.	DATE	DRF	ENG
A	S-6511	ESTABLISH DWG.		
-	S-6511	08/30/96	BRB	SB
B	S-6727	05/09/97	BRB	KS
C	S-6777	08/13/97	RMC	SB
D	S-6788	12/03/98	SG	SB
-	-	12/07/98	RMC	SB
E	S-7093	02/18/99	SG	SB

ZENITH CONTROLS, INC.

TITLE: A6 OR T3/W3 PRESIGNAL ACCESSORY					
MODEL: MX100					
DRFT: SG	DATE:	SCALE:	CHK:	APPD:	
ENGR: SB	07/18/96	-			
DWG NO.: 50R-1012					E REV
CADD: S5K		SHT 1 OF 2			

Katolight Service - Master Repair Manual - Page 4518

Drawing #50R-1012, Page 2

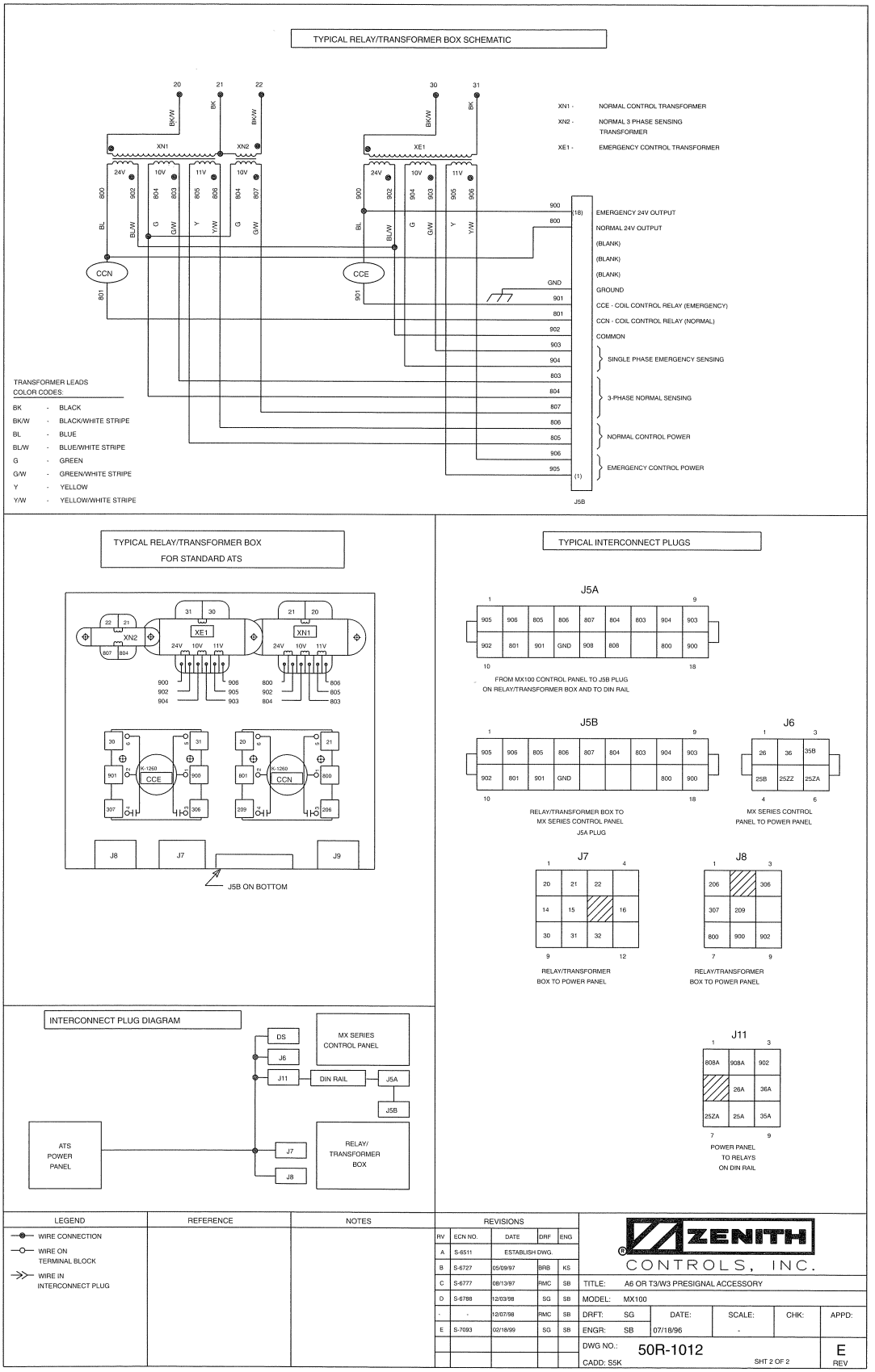

Katolight Service - Master Repair Manual - Page 4519

Drawing #50R-1006, Page 1

CONNECTION DIAGRAM

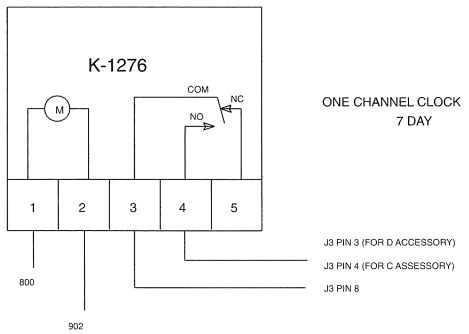

ONE CHANNEL CLOCK
7 DAY

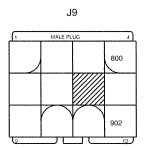

RELAY/TRANSFORMER FOX
TO CLOCK

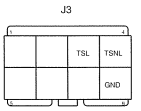

MX 100 CONTROL PANEL
TO CLOCK ON DIN RAIL

LEGEND

Exercise clock, Weekly program with 20 settings.
See sheet 2 for programming instructions.
K-1276..... Clock 24V, 60 HZ

J3 Plug-MX100..... PS-5134...Socket Receptacle 8 pt. Mini
PS-5127...Socket Female Mini (Qty. 2)

J9 Plug-R/T Box..... PS-5080... Socket Receptacle 12 Pt.
PS-5084... Socket Female .093" (Qty. 2)

OPERATION

The "C" plant exercisor starts the engine (No Load Test) by closing the TSNL circuit.

The "D" plant exercisor simulates normal line failure, starts generator, and transfers load to emergency at selected time intervals.

NOTES

1. Total GENERATOR running time = clock ON time + "U" timer ON time (if U is used).
2. Mount Clock and Transformer to Din Rail on MX100 Control Panel.

CAUTION

⚠ Before changing the time setting, turn Disconnect Switch (DS) to "OFF" position; after desired selection has been made, return DS to "ON" position

LEGEND	REFERENCE	NOTES

REVISIONS

REV	ECN NO	DATE	DWN	ENG
H	S-7036-1	12/21/98	SG	SB

ZENITH CONTROLS, INC.
CHICAGO, IL 60630 USA

THIS DRAWING CONTAINS PROPRIETARY AND CONFIDENTIAL INFORMATION
DUPLICATION, REPRODUCTION OR USE OF THIS DRAWING IN ANY FORM OTHER THAN AS EXPRESSLY PERMITTED BY ZENITH CONTROLS, INC. IS STRICTLY PROHIBITED

DWG TITLE: C OR D CLOCK ACCESSORIES
JOB/MODEL: MX100

CHKD	APPD	CADD	ORDER NUMBER	DRAWING NUMBER
		S5K	-	50R-1006

DRWN	ENGR	DATE	SCALE	SHEET	REV
SDW	SB	11/20/95	-	SHT 1 OF 2	H

Katolight Service - Master Repair Manual - Page 4520

Drawing #50R-1006, Page 2

Digi 20 PROGRAMMING INSTRUCTIONS

The circular keypads are positioned to provide a sequential path for programming. Starting with Prog. to select a program, clockwise to to select ON or OFF. Then h for hour, m for minute, and finally Day to select day or days of the week. If an input is missing or incomplete, the missing segments will flash when the or program key is depressed. (For example, if no ON or OFF is selected, the ON symbol will flash). The missing entry must be completed before programming can resume. While programming, pressing the h, m or Day key longer then 2 seconds will cause a rapid roll of the parameter. A program consists of: 1. ON or OFF command, 2. Hour and minute, and 3. Day or multiple days on which it is to occur.
Note: A flashing display indicates either incomplete data entry or the battery is low. Check to see if days and ON or OFF times are entered, and check the power supply to the time control.

IMPORTANT: Depress reset key (Res.) before beginning to set time and program

SETTING TIME AND DAY OF CLOCK

1. Select military (24:00 hr.) or AMPM (12:00 hr.) time mode by depressing and holding h key while pressing –1h key to toggle between military and AM/PM. (AM appears in display when in AM/PM mode).
2. Press and hold down key.
3. If setting the time when daylight savings time is in effect, press –1h key ance (–1h will appear in display).
4. Set hour with h key. If AM or PM does not appear in display, the unit is in see note above to change display.
5. Set minutes with m key.
6. Press Day key repeatedly to the day of the week (1 is Monday, 7 is Sunday).
7. Release key, colon will begin flashing. If the days are flashing, the day of the week was not entered. (See step 6).

PROGRAMMING

1. Press Prog. key will appear in display. (Pressing Prog. key again, display will show the number of free programs: Fr 20). Press again to advance to 1st program.
2. Press key, ON symbol will appear. Pressing the key again will toggle to OFF . Select ON or OFF for the program with the key.
3. Press h to select hour for switching time.
4. Press m to select minute for switching time.
5. If the program is to occur every day of the week, (24 hour time control) ignore Day key and press Prog. key to advance to next program.
6. If 7 day time control is desired, press Day key. 1 2 3 4 5 6 (Mon. thru Sat.) block of days appears in display. Pressing Day key again, 1 2 3 4 5 (Mon. thru Fri.) appears in display. Press Day key again, 6 7 (Sat. & Sun.) appears in display. Pressing Day key again, 1 (Mon.) appears in display. Repeated presses will cycle through all days of the week, and back to 1 thru 7 (Mon. thru Sun.). Select day or block of days desired with the Day key.
7. Press Prog. key and repeat steps 2 thru 6 to enter additional programs of ON and OFF times. Note that more than one OFF time program may be entered, enabling automatic control of manual overrides.
8. Press key to enter run mode.

IMPORTANT: THE OUTPUT RELAYS WILL SWITCH ON (OR OFF) ONLY AT THE PROGRAMMED TIMES, AFTER PROGRAMMING IS COMPLETED. IF A CHANNEL SHOULD BE ON, IT MUST BE MANUALLY TURNED ON WITH THE KEY. FOR EXAMPLE: PROGRAMMING IS COMPLETED AT 2PM AND CH1 WAS PROGRAMMED TO BE ON AT 8AM AND OFF AT 5PM. AFTER PRESSING THE KEY, CH1 WILL BE OFF; PRESS TO TURN IT ON. IT WILL ASSUME AUTOMATIC OPERATION AT THE 5PM OFF TIME.

REVIEW AND CHANGE OF PROGRAMS

1. To review a program at any time press Prog. key. Programs will be displayed in the sequence they were entered with repeated presses of Prog. key.
2. To change a program, select the program to be changed with Prog. key, and enter the new time of day and/or days of week just as in the programming steps shown above. The old program is overwritten with the new selections. Press Prog. to store the new program.
3. To delete an individual program, select the program as in step 1 and press the m key and then the h key until "--:--" appears in dispaly. Press either Prog. or key until "--:--: flashes. The program is deleted after a few seconds.

MANUAL OVERRIDE

While in Run mode, (symbol is in display), pressing the key will reverse the load status (switch load OFF it is ON, or switch ON if it is OFF). A hand symbol appears in display to indicate the override is active. At the next scheduled switching time, automatic time control will resume, eliminating the override.
Pressing the key a second time appears in the display indicating the load is switched permanently ON.
Pressing the key a third time appears in the display indicating the load is switched permanently OFF.
Pressing the key a fourth time returns to automatic, appears in the display.

LEGEND	REFERENCE	NOTES

REVISIONS

REV	ECN NO.	DATE	DFT	ENG
H	S-7036-1	12/21/98	SG	SB

ZENITH CONTROLS, INC.
CHICAGO, IL 60609 USA

THIS DRAWING CONTAINS PROPRIETARY AND CONFIDENTIAL INFORMATION.
DUPLICATION, REPRODUCTION OR USE OF THIS DOCUMENT OR ITS CONTENTS IN ANY FORM OTHER THAN AS EXPRESSLY PERMITTED BY ZENITH CONTROLS, INC. IS STRICTLY PROHIBITED.

DWG TITLE: C OR D CLOCK ACCESSORIES
JOB/MODEL: MX100

CHK'D:	APP'D:	CADD:	ORDER NUMBER:	DRAWING NUMBER:
		ACAD	-	50R-1006

DRWN:	ENGR:	DATE:	SCALE:	SHEET:	REV:
SDW	SB	11/20/95	N/A	2 OF 2	H

Katolight Service - Master Repair Manual - Page 4521

Drawing #50R-1002, Page 1

CONNECTION DIAGRAM

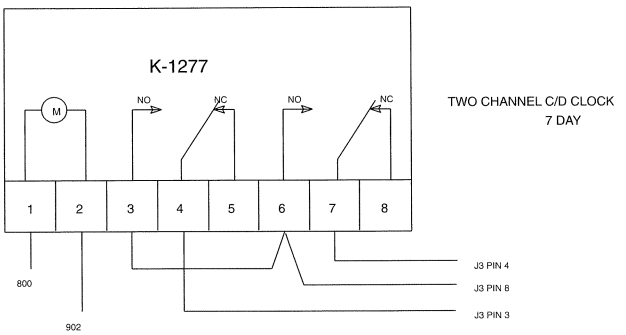

TWO CHANNEL C/D CLOCK
7 DAY

J9

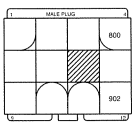

RELAY/TRANSFORMER BOX
TO CLOCK

J3

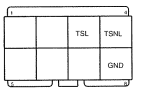

MX100 CONTROL PANEL
TO CLOCK ON DIN RAIL

LEGEND

C/D..... Exercise clock, Weekly program with 42 set-point programs
See sheets 2 & 3 for programming instructions.
K-1277..... Clock 24V, 60 Hz
K-1279... Din Rail Mounting Base.

J3 Plug-MX100..... PS-5134...Socket Receptacle 8 pt. Mini
PS-5127...Socket Female Mini (Qty. 3)

J9 Plug-R/T Box..... PS-5080... Socket Receptacle 12 Pt.
PS-5084... Socket Female .093" (Qty. 2)

OPERATION

C-MODE: The "C" plant exercisor starts the engine (No Load Test) by closing the TSNL circuit "C2".

D-MODE: The "D" plant execisor simulates normal line failure, starts generator, and transfers load to emergency at the selected time intervals.

NOTES

1. Total GENERATOR running time = "C" ON time + "U" timer ON time (if U is used).
2. Mount Clock to Din Rail on MX100 Control Panel.

CAUTION

⚠ Before changing the time setting, turn Disconnect Switch (DS) to "INHIBIT" position; after desired selection has been made, return DS to "AUTO" position

LEGEND	REFERENCE	NOTES

REVISIONS

REV	ECN NO	DATE	DWN	ENG
H	S-7035-1	12/21/98	SG	SB

ZENITH CONTROLS, INC.
CHICAGO, IL 60639 USA

THIS DRAWING CONTAINS PROPRIETARY AND CONFIDENTIAL INFORMATION.
DUPLICATION, REPRODUCTION OR USE OF THIS DOCUMENT OR ITS CONTENTS IN ANY FORM OTHER THAN AS EXPRESSLY PERMITTED BY ZENITH CONTROLS, INC. IS STRICTLY PROHIBITED.

DWG TITLE: C/D WITH 7 DAY CLOCK
JOB/MODEL: MX100

CHKD:	APP'D:	CADD:	ORDER NUMBER:		DRAWING NUMBER:		
		SSK	-		50R-1002		
		DRWN:	ENGR:	DATE:	SCALE:	SHEET:	REV:
		SDW	SB	11/20/95	-	SHT 1 OF 2	H

Katolight Service - Master Repair Manual - Page 4522

Drawing #50R-1002, Page 2

Digi 42/2 PROGRAMMING INSTRUCTIONS

The circular keypads are positioned to provide a sequential path for programming. Starting with Prog. to select a program, clockwise to to select ON or OFF. Then h for hour, m for minute, and finally Day to select day or days of the week. If an input is missing or incomplete, the missing segments will flash when the or program key is depressed. (For example, if no ON or OFF is selected, the ON symbol will flash). The missing entry must be completed before programming can resume. While programming, pressing the h, m or Day key longer then 2 seconds will cause a rapid roll of the parameter. A program consists of: 1. ON or OFF command, 2. Hour and minute, and 3. Day or multiple days on which it is to occur.
Note: A flashing display indicates either incomplete data entry or the battery is low. Check to see if days and ON or OFF times are entered, and check the power supply to the time control.

IMPORTANT: Depress reset key (Res.) before beginning to set time and program

MANUAL OR AUTOMATIC DAYLIGHT TIME CHANGEOVER

For areas where Daylight is not observed, please ignore this section.
The Digi 42/2 offers the option of manual or completely automatic daylight time chageover in the spring and fall. For manual changeover, depressing the –1h key sets clock time up or down 1 hour to change the time twice a year. For automatic changeover, perform the following programming, which only needs to be done during initial installation, or if the reset key is depressed at any time. When programmed for auto changeover, the time switch will automatically change the time at 2 AM on the first Sunday of April and the last Sunday of October until the year 2079.

1. Select military (24:00 hr.) or AM/PM (12:00 hr.) time mode by simultaneously depressing the –1h key and h keys. (AM appears in display when in AM/PM mode).
2. Enter the Daylight Time Program by pressing the –1h and Day once simultaneously. A "1" will appear uner "Mo" in display. Then set the current (today's) date with the m key and the month with the h key. (If military time, set date with h key and month with m key). For example: Feb 15 would appear as 02:15 if in AM/PM or as 15:02 if in miliatary time.
3. Press –1h key once. A "12" will appear under "Tu" in display. Then enter the current year with the m key. If you overshoot the current year, hold down the m key and the years will scroll to 2079 and back to 1995, 1996, 1997, etc.
4. Press –1h key once. A "3" will appear under "We" in display, and "AU" (for preset European dates). If European dates are desired, press key to enter the data and exit Daylight Time programming mode.
5. Press m key once. "cHA" will appear in display (for entering North American dates). NOTE: If the m key is inadvertantly pressed two times, and "HA" appears in display, press the m key two more times, or until display shows "cHA". ("HA" for specific dates is not used at present).
6. Press –1h key once. A "4" will appear under "Th" in display. Enter the date for changeover to Summer Daylight Time for the current year (see chart below for dates) by entering the date with the m key and the month with the h key. (If in militar time, set date with h key and month with m key). For example: April 7 would appear as 04:07 if in AM/PM time, 07:04 if in military time.
7. Press –1h key once. A "5" will appear under "Fr" in display. Enter the date changeover to Winter Time for the current year (see chart below for dates) by entering date with the m key and the month with the h key. (If in military time, set date with h key and month with m key).
8. Press key to enter the data and exit the Daylight Time programming mode.

Daylight Time Changeover Dates

1996.....April 07.....October 27	1999.....April 04.....October 31
1997.....April 06.....October 26	2000.....April 02.....October 29
1998.....April 05.....October 25	2001.....April 01.....October 28

SETTING TIME AND DAY OF CLOCK

1. Select military (24:00 hr.) or AMPM (12:00 hr.) time mode by depressing and holding h key while pressing –1h key to toggle between military and AM/PM. (AM appears in display when in AM/PM mode).
2. Press and hold down key.
3. If Automatic Daylight Time Changeover is not programmed, press –1h key once if setting the timer when daylight time is in effect (–1h appears in display).
4. Set hour with h key. If AM or PM does not appear in display, the unit is in see note above to change display.
5. Set minutes with m key.
6. Press Day key repeatedly to the day of the week (1 is Monday, 7 is Sunday).
7. Release key, colon will begin flashing. If the days are flashing, the day of the week was not entered. (See step 6).

PROGRAMMING

1. Press Prog. key will appear in display. (Pressing Prog. key again, display will show the number of free programs: Fr 42). Press again to advance to 1st program.
2. Press 1 key or 2 key, ON symbol will appear below CH1 or CH2. Pressing the key again will toggle to OFF . Pressing a third time clears the ON/OFF for the channel from the program. Pressing again returns to ON. Select ON or OFF for the program with the key.
   Note: ON or OFF can be selected for BOTH CHANNELS. (Both channels can switch ON at the same time, or one can switch ON and the other OFF from the same program).
3. Press h to select hour for switching time.
4. Press m to select minute for switching time.
5. If the program is to occur every day of the week, (24 hour time control) ignore Day key and press Prog. key to advance to next program.
6. If 7 day time control is desired, press Day key, a flashing underline appears below day 1. Pressing the Day key a second time advances the underline to day 2, etc. Use the Day key to advance to a day of the week to be omitted from the program and press the Sel. (select) key, the day will flash. Continue pressing Day and Sel. keys to omit days until only the desired days remain and are not flashing.
7. Press Prog. key and repeat steps 2 thru 6 to enter additional programs of ON and OFF times. Note that more than one OFF time program may be entered, enabling automatic control of manual overrides.
8. Press key to enter run mode.

8th DAY (HOLIDAY OR VACATION) PROGRAM

Multiple programs (more than one ON and OFF time) may be entered to be implemented on holidays or vacation periods. (A typical program is: OFF, 12:01Am to have the load(s) OFF during the holiday).

is: OFF, 12:01Am to have the load(s) OFF during the holiday).

1. Press Prog. key, select ON or OFF, h and m as with normal programming, but do not select or omit any days.
2. Press key. will appear in the display, indicating 8th day holiday/vacation program.
3. Press key to enter run mode. Time switch is now permanently preset for the ON/OFF schedule to be implemented on holiday or extended vacation period in the future as described below.

HOLIDAY PROGRAM: Pre-select Day or Series of Days for 8th Day Program to Occur.

The holiday program may be implemented at any time up to 6 days in advance of the holiday(s) or vacation period. It may also be activated on the holiday or first day of the vacation period.
1. While in Run mode, press key. "--Ho" appears in display.
2. Press Day key to select the day of week Holiday program is to begin.
3. Press Sel. key to select the number of days Holiday program is to run. Up to 99 days. If Sel. key is held down, numbers roll up rapidly to 99 then to 01).
4. Press key to store, holiday symbol appears in display.
5. To review or change the Holiday Program, press key. To cancel Holiday Program, press key.

On the day that the Holiday Program is selected to begin, the 8th day program will be implemented at 12:00AM Midnight and have priority over the regular daily programs. The display will show the holiday symbol and the number of days the program is to run, which will count down each day and revert to the normal display, when all days of the holiday/vacation period have expired. To cancel holiday program, press key.

IMPORTANT: THE OUTPUT RELAYS WILL SWITCH ON (OR OFF) ONLY AT THE PROGRAMMED TIMES, AFTER PROGRAMMING IS COMPLETE. IF A CHANNEL SHOULD BE ON, IT MUST BE MANUALLY TURNED ON WITH THE KEY. FOR EXAMPLE: PROGRAMMING IS COMPLETE AT 2PM AND CH1 WAS PROGRAMMED TO BE ON AT 8AM AND OFF AT 5PM. AFTER PRESSING THE KEY, CH1 WILL BE OFF; PRESS TO TURN IT ON. IT WILL ASSUME AUTOMATIC OPERATION AT THE 5PM OFF TIME.

REVIEW AND CHANGE OF PROGRAMS

1. To review a program at any time press Prog. key. Programs will be displayed in the sequence they were entered with repeated presses of Prog. key.
2. To change a program, select the program to be changed with Prog. key, and enter the new time of day and/or days of week just as in the programming steps shown above. The old program is overwritten with the new selections. Press Prog. to store the new program.
3. To delete an individual program, select the program as in step 1 and press the m key and then the h key until "--:--" appears in dispaly. Press either Prog. or key until "--:--: flashes. The program is deleted after a few seconds.

MANUAL OVERRIDE

While in Run mode, (symbol is in display), pressing the key will reverse the load status (switch load OFF it is ON, or switch ON if it is OFF). A hand symbol appears in display to indicate the override is active. At the next scheduled switching time, automatic time control will resume, eliminating the override.
Pressing the key a second time appears in the display indicating the load is switched permanently ON.
Pressing the key a third time appears in the display indicating the load is switched permanently OFF.
Pressing the key a fourth time returns to automatic, appears in the display.

LEGEND	REFERENCE	NOTES

REVISIONS

REV	ECN NO.	DATE	DFT	ENG
H	S-7036-1	12/21/98	SG	SB

ZENITH CONTROLS, INC.
CHICAGO, IL 60629 U.S.A.

THIS DRAWING CONTAINS PROPRIETARY AND CONFIDENTIAL INFORMATION.
DUPLICATION, REPRODUCTION OR USE OF THIS DOCUMENT OR ITS CONTENTS IN ANY FORM OTHER THAN AS EXPRESSLY PERMITTED BY ZENITH CONTROLS, INC. IS STRICTLY PROHIBITED.

DWG TITLE: C/D ACCESSORIES - MX100
JOB/MODEL: MX100

CHKD:	APPD:	CADD:	ORDER NUMBER:	DRAWING NUMBER:
		ACAD	-	50R-1002

DRWN:	ENGR:	DATE:	SCALE:	SHEET:	REV:
SDW	SB	11/13/95	N/A	2 OF 2	H

Katolight Service - Master Repair Manual - Page 4523

Drawing #50R-1003, Page 1

REVISIONS			
REV.	DESCRIPTION	DATE	APPROVED
J	S-7625 ADD GRASSLIN TIMER	02/13/01	KK

CONNECTION DIAGRAM

TWO CHANNEL C/D CLOCK
365 DAY

DIGI 322-45/2Y

OPERATING INSTRUCTIONS - SEE SHEETS 2 & 3.

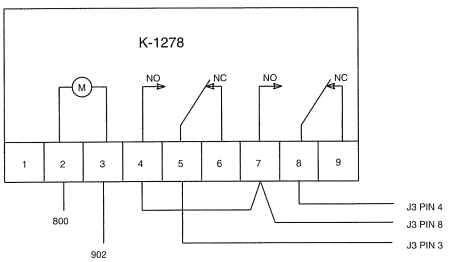

MFR: GRASSLIN

TALENTO 892

OPERATING INSTRUCTIONS - SEE SHEETS 4 THRU 14.

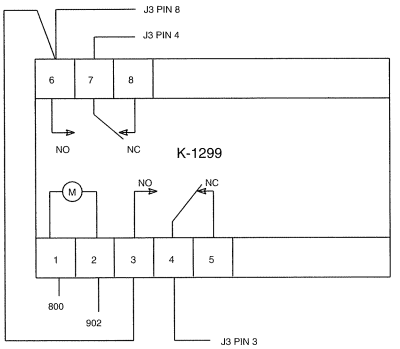

J9

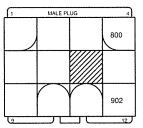

RELAY/TRANSFORMER BOX
TO CLOCK

J3

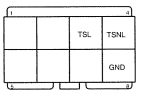

MX100 CONTROL PANEL
TO CLOCK ON DIN RAIL

LEGEND

C/D..... Exercise clock, 365 day program.
See sheets 2 & 3 for programming instructions.
K-1278..... Clock 24V, 60 Hz (No longer available).
K-1299..... Clock 24V, 60 Hz

J3 Plug-MX100..... PS-5134...Socket Receptacle 8 pt. Mini
PS-5127...Socket Female Mini (Qty. 3)

J9 Plug-R/T Box..... PS-5080... Socket Receptacle 12 Pt.
PS-5084... Socket Female .093" (Qty. 2)

OPERATION

C-MODE: The "C" plant exercisor starts the engine (No Load Test) by closing the TSNL circuit "C2".

D-MODE: The "D" plant execisor simulates normal line failure, starts generator, and transfers load to emergency at the selected time intervals.

NOTES

1. Total GENERATOR running time = "C" ON time + "U" timer ON time (if U is used).
2. Mount Clock and Transformer to Din Rail on MX100 Control Panel.

CAUTION

⚠ Before changing the time setting, turn Disconnect Switch (DS) to "INHIBIT" position; after desired selection has been made, return DS to "AUTO" position

GE PROPRIETARY AND CONFIDENTIAL INFORMATION
This document is the property of General Electric ("GE") and contains proprietary information of GE. This document is loaned on the express condition that neither it nor the information contained therein shall be disclosed to others without the express written consent of GE Industrial Systems, and that the information shall be used by the recipient only as approved expressly by GE Industrial Systems. this document shall be returned to GE upon its request. This document may be subject to certain restrictions under U.S. export controls laws and regulations.

THIRD ANGLE PROJECTION

FOR ADDITIONAL INFO REFER TO
APPLIED PRACTICES
UNLESS OTHERWISE SPECIFIED DIMENSIONS ARE IN INCHES
TOLERANCES ON
2 PL. DECIMALS – .020
3 PL. DECIMALS – .005
ANGLES – 1
FRACTIONS – 1/64
FINISH

AutoCad Generated

SIGNATURES		DATE
MODEL	SG	02/13/01
DETAIL		
CHECKED		
ENGRG	KK	
MFG		
QUALITY		
ISSUED		

DRAWING FILE 50r-1003-j-1.dwg
MODEL / ASSEMBLY FILE MX100
CTQs: CRITICAL TO QUALITY CHARACTERISTIC

TITLE
C/D WITH 365 DAY CLOCK

FIRST MADE FOR

SIZE	CAGE CODE	DWG NO
B		50R-1003

SCALE: - SHEET 1 OF 14

Katolight Service - Master Repair Manual - Page 4524

Drawing #50R-1003, Page 2

REVISIONS			
REV.	DESCRIPTION	DATE	APPROVED
J	S-7625 ADD GRASSLIN TIMER	02/13/01	KK

DIGI 322-45/2 Y-24

KEYPAD DESCRIPTION

Mo-Su - Day selector
✱Reset - Clears all programs and actual time
✱S/W - Switch for daylight savings time functions
Prior. - Sets priorities
Year - Sets year when setting actual time
CL - To cancel an individual program step
R - Used to review the program
1X - Used to enter a one time schedule
N - Used to enter an intermediate step in a program block
- Recalls actual time (Time of Day)
S - Used to store the final step in a program block
- Sets the momentary contact (IMP)
- Used to set the end of a multiday holiday period
Day - Used to set the day of the month
Month - Used to set the month
h+ - Hour advance
h- - Hour reverse
m+ - Minute advance
m- - Minute reverse
I/O - Sets ON(1), OFF(0) command for each channel
- Manual override for each channel
✱ Recessed buttons - use a long pen point

LCD DISPLAY ELEMENTS

The LCD incorporates a number of different elements to display various data and information.

1. Example: Actual date and time of day

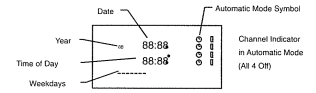

2. Example: Daylight savings time

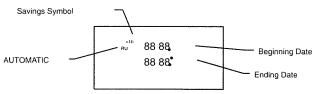

3. Example: Momentary Contact

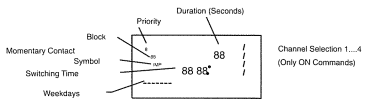

4. Example: Other displays

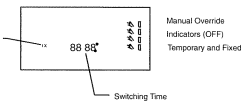

BLOCK FORMATION

The purpose of the blocks is to simplify the programming, i.e. switching times that are repeated for different holidays or periods need not be repeated. Likewise, when programming ON and OFF times the date need only be entered once.

The time switch assigns a block number to each program or date block entered from 00 to 99. All programs withour a date (7-day programs) automatically receive the block number 00.

Programs with dates - individual days or period of days - are assigned an ascending block number (01, 02.....99). All programs within a block are stored by pressing "N". The last program or portion of a program within a block is entered by pressing "S", thus closing the block.

EXECUTION OF PROGRAMS

At beginning of each day the microprocessor determines which of the stored programs for that day have the highest priority. Only the highest priority program(s) will be executed.
Once the digi 322 is programmed,it will automatically "look back" and assume the correct ON or OFF switch position.

PRIORIY

The microprosessor automatically assigns the lowest priority - "0" -to standard 7-day programs.
Holiday programs with a duration of more than one day automatically receive priority "1".
Holiday programs for one day only automatically receive priority "2".
A higher priority can be manually assigned to any holiday program by using the "Prior." key.

PROGRAM STORAGE CAPACITY

The digi 322 can store up to 322 programs. These 322 programs can be freely assigned to different dates or periods, switching times or channels.
A storage position is used each time the button "N" or "S" is pressed. If all storage positions are used up, four 8's will be shown in the display.

If a program step is not complete and storage is attempted with the "N" or "S" button, the missing components will blink in the LCD.

SETTING THE TIME

[Example: 8:15 AM, July 10., 1991]
Press "Reset" to clear the time and all programs.
While holding :

Press "Year"	to 91
Press "Month"	to 7 (July)
Press "Day"	to 10
Press "h+"	to 8 (AM)
Press "m+"	to 15

Release the . The correct date and time will be displayed, as will the day of the week; the time colon will blink. Channel setting and override status will be indicated on the right and the +1h indicates that Daylight Saving Time is in effect, if appropriate.

DAYLIGHT SAVINGS TIME (DST) FUNCTIONS

The digi 322 is pre-programmed for DST to begin on the last Sunday in March and to end on the last Sunday in September every year. You can program a different DST as follows:

To cancel pre-programmed DST:

Press "S/W"	(dates will appear)
Press "CL"	to cancel - (zeros will appear)
Press "S"	to store
Press	to display the time of day

To program different dates for DST:

[Example: For 1991, April until October 27]

Press "S/W"	the dates 03:31 to 09:29 are displayed
Press "CL"	the display shows zeros
Press "Month"	to 4 (April)
Press "Day"	to 7
Press	to set the ending date
Press "Mounth"	to 10 (Ocober)
Press "Day"	to 27
Press "S"	to store
Press	to display the time of day

PROGRAMMING 7-DAY SCHEDULES

NOTE: The actual time of day must be set prior to programming. Check DST. We recommend that all programs be first written out on the enclosed program worksheets.

[Example: Channel 1 on at 7 AM and off at 6 PM, Monday thru Friday]

Press "h+"	to 7 AM (press 9 times)
Press "m+"	to 00 (once)
Press "Sa"	to omit Saturday
Press "Su"	to omit Sunday
Press "I/O"	(for channel 1) to 1 (ON)
Press "N"	to store
Press "h+"	to 6 PM
Press "m+"	to 00 (once)
Press "Sa"	to omit Saturday
Press "Su"	to omit Sunday
Press "I/O"	(for channel 1) twice to 0 (OFF)
Press "S"	to store

Weekly program steps are automatically assigned to block "00" and priority "0".

GE PROPRIETARY AND CONFIDENTIAL INFORMATION

This document is the property of General Electric ("GE") and contains proprietary information of GE. This document is loaned on the express condition that neither it nor the information contained therein shall be disclosed to others without the express written consant of GE Industrial Systems, and that the information shall be used by the recipient only as approved expressly by GE Industrial Systems. this document shall be returned to GE upon its request. This document may be subject to certain restrictions under U.S. export controls laws and regulations.

THIRD ANGLE PROJECTION

FOR ADDITIONAL INFO REFER TO
APPLIED PRACTICES
UNLESS OTHERWISE SPECIFIED DIMENSIONS ARE IN INCHES
TOLERANCES ON
2 PL. DECIMALS – .020
3 PL. DECIMALS – .005
ANGLES – 1
FRACTIONS – 1/64
FINISH

AutoCad Generated

SIGNATURES		DATE
MODEL	SG	02/13/01
DETAIL		
CHECKED		
ENG/PD	KK	
MFG		
QUALITY		
ISSUED		
DRAWING FILE	50r-1003-j-2.dwg	
MODEL / ASSEMBLY FILE	MX100	
# CTQs	CRITICAL TO QUALITY CHARACTERISTIC	

TITLE
C/D WITH 365 DAY CLOCK
DIGI 322-45/2 Y-24
FIRST MADE FOR

SIZE	CAGE CODE	DWG NO
B		50R-1003
SCALE: -		SHEET 2 OF 14

Katolight Service - Master Repair Manual - Page 4525

Drawing #50R-1003, Page 3

REVISIONS			
REV.	DESCRIPTION	DATE	APPROVED
J	S-7625 ADD GRASSLING TIMER	02/13/01	KK

PROGRAMMING INDIVIDUAL HOLIDAYS

[Example: July 4th - fixed date holiday; Labor Day (September 2, 1991) - 1-time schedule; Channel 1 off at 12:01 AM]

NOTE: Fixed day holidays will stay in the program until the year 2079 when the internal clock stops. As one time holiday commands are executed the month and day go to zero (visible if you review the program). The month and day for the next year can be substituted for the zeros. For example: If you have a holiday program for Thanksgiving 1991 it is executed on November 28. If you review the program on November 29th you will see 00.00 not 11.28; you can enter 11.26, and press the "N" key to program Thanksgiving for 1992.

Press "Month"	to 07 (July)
Press "Day"	to 04
Press "N"	to store
Press "Month"	to 09 (September)
Press "Day"	to 02
Press "1X"	1-time schedule only
Press "N"	to store
Press "h+"	to 12 AM
Press "m+"	to 01
Press "I/O"	(for channel 1) twice to 0 (OFF)
Press "S"	to store this and close the block

Individual Holiday programs are automatically assigned priority 2.

NOTE: Ignore the days of the week indicator.

PROGRAMMING MULTIDAY HOLIDAY PERIODS

[Example: Channel 1 off (we will use an OFF command at 12:01 AM) each day from June 22, 1991 until September 3, 1991 inclusive]. The daily program will resume September 4. As this "School Summer Vacation" will be different in 1992 this becomes a 1X (one time) schedule.

Press "Month"	to 06 (June)
Press "Day"	to 22
Press →	to set the end date
Press "Month"	to 09 (September)
Press "Day"	to 03
Press "1X"	to set one time
Press "N"	to store
Press "h+"	to 12 AM
Press "m+"	to 01
Press I/O"	(for channel 1) twice to 0 (OFF)
Press "S"	to store this and close the block

Multiday holiday program are automatically assigned priority 1. These periods can be programmed with a 7-day schedule that is different than the standard 7-day schedule. Simply follow the above procedure and add the respective Monday thru Sunday keys for the desired days of the week before selecting the hours.

If no ON or OFF times are programmed for some or all days of the week during a multiday holiday period, the standard 7-day schedule will be executed.

REPEAT CHANNEL SELECTION

The control of loads is not restricted to a single channel. All loads can be turned on or off at the same time. For example, load 1 can be turned OFF simultaneous to load 2 being turned ON.

SPECIAL PROGRAM FUNCTIONS

MOMENTARY CONTACT PROGRAM

Short duration programs in 1-second intervals up to 59 seconds can be programmed for loads such as bells.

[Example: A noon whistle (channel 2) for six seconds Monday thru Friday]

Press "h+"	to 12 PM - noon
Press "m+"	once to 00
Press "I/O"	(channel 2) once to 1
Press "Pulse"	to 6 (seconds)
Press "Sa, Su"	to eliminate Saturday & Sunday
Press "S"	to store

NOTE: This can only be used for ON commands.

PRIORITIES

Pressing the "Prior." key after entering the date for a holiday program permits the assignment of a higher priority (the highest is 9). This allows that standard holiday programs with priority 1 or 2 are overridden with special programs.

MANUAL OVERRIDE

The digi 322 provides temporary and fixed overrides. Each channel has an elongated button below the . Pressing this button will change the status of a channel, i.e. ON to OFF or OFF to ON. The small in the display will change to indicating an override condition. This is a temporary override which will in turn be overridden by the next program change. For example, if lights are programmed to turn off at 4 PM and they are turned on manually at 2 PM, they will turn off at 4 PM. Pushing the button again will give a FIX 1 (ON) and pushing it another time will give a FIX 0 (OFF). These are permanent ON or OFF commands which will not be overridden by the program. Pushing the elongated button one more time will return to automatic operation.

PROGRAM REVIEW

The program can be reviewed by pushing the "R" key successively. Block 00 is reviewed first and each weekly ON/OFF command will be displayed on successive screens. A blank screen indicates the end of block 00. Block 01 is reviewed next. The first screens show the holidays followed by a blank screen. The ON/OFF commands for those days are next followed by another blank screen which indicates the end of block 01. Block 02 and any additional blocks are reviewed in the same manner. Press the to return to the TOD display anytime.

CANCELLING PROGRAMS

Use the "R" key to find the program step to be cancelled. Pressing the "CL" key will cancel that step and it is deleted from memory. To delete holidays from the program you must clear both the date and the time/on/off positions. The reset key will cancel all program steps and also the current time of day, date etc.

EDITING PROGRAMS

Use the "R" key to find the program step to be corrected. Make the changes as in normal programming and then use the "N" key to store the change.

BATTERY-POWERED RESERVE

In case of power failure, the built-in nickel-cadmium battery maintains the time of day, program storage and the LCD display of 150 hours (6+ days). During this time, all programmed switching events will be carried out but the relays will not operate. The battery reserve operates to its full capacity only if the digi 322 has been connected to electrical power for at least 140 hours.

NOTES:

1. When power is restored after a power failure, the digi 322 "looks back" and assumes the correct ON or OFF switch position.
2. After entering a time of day and pressing N or S, the display may still show the hour that was entered.

   For example: if 2:00 PM had been enterned, the display may show "PM 02:--" after pressing N or S.

   To enter the next time of day program, it is necessary to change the hour with the h+ or h- key even if the next time of day program is to be the same hour as previously entered. If the hour is not changed, the Digi322 will not accept the next program.

   For example: After entering a 2:00 PM program, if the next time of day program is to be 2:30 PM, press the h+ key to 3 PM, and then the h-key back to 2 PM, and then press the m+ key to :30.

GE PROPRIETARY AND CONFIDENTIAL INFORMATION

This document is the property of General Electric ("GE") and contains proprietary information of GE. This document is loaned on the express condition that neither it nor the information contained therein shall be disclosed to others without the express written consent of GE Industrial Systems, and that the information shall be used by the recipient only as approved expressly by GE Industrial Systems. this document shall be returned to GE upon its request. This document may be subject to certain restrictions under U.S. export controls laws and regulations.

THIRD ANGLE PROJECTION

FOR ADDITIONAL INFO REFER TO

APPLIED FRACTIONS

UNLESS OTHERWISE SPECIFIED DIMENSIONS ARE IN INCHES

TOLERANCES ON

2 PL. DECIMALS – .020

3 PL. DECIMALS – .005

ANGLES – 1

FRACTIONS – 1/64

FINISH

AutoCad Generated

SIGNATURES		DATE
MODEL	SG	02/13/01
DETAIL		
CHECKED		
ENGRG	KK	
MFG		
QUALITY		
ISSUED		

DRAWING FILE: 50r-1003-j-3.dwg

MODEL / ASSEMBLY FILE: MX100

CTQs CRITICAL TO QUALITY CHARACTERISTIC

TITLE

C/D WITH 365 DAY CLOCK

DIGI 322-45/2 Y-24

FIRST MADE FOR

SIZE	CAGE CODE	DWG NO
B		50R-1003

SCALE: - SHEET 3 OF 14

Katolight Service - Master Repair Manual - Page 4526

Drawing #50R-1020

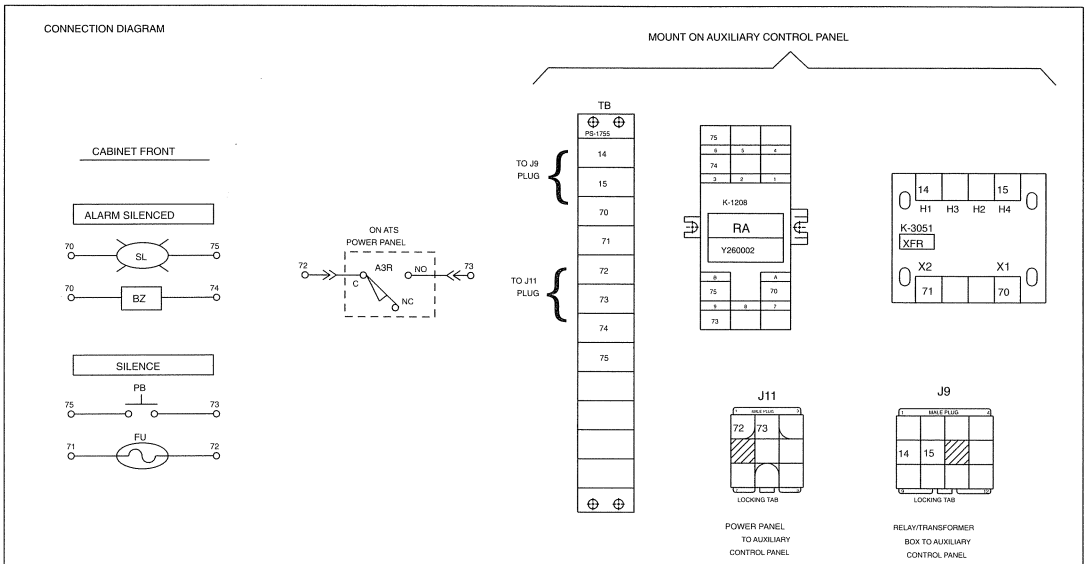

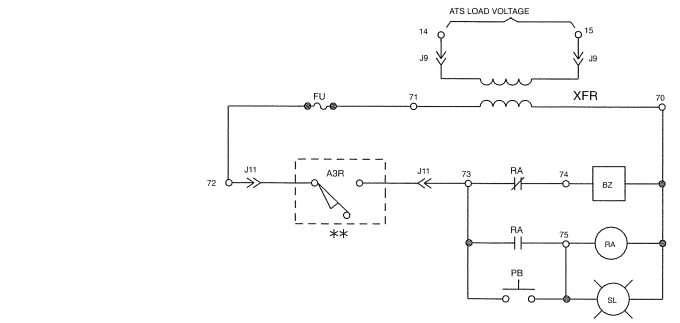

LEGEND

RA.....Silence Relay; Relay 120 VAC Y260002; K-1208 Base
BZ.....Buzzer Alarm K-1126; Bracket 14H-1042
XFR.....Transformer 25 VA K-3051 for 208, 240, 480 VAC systems
A3R.....Auxiliary contact, ATS in Emergency
FU.....Fuse, 3 Amp, 250 V; PS-1439
Fuseholder, PS-1438
TB.....Terminal Block 12 PT, PS-1755
J9.....Plug - R/T Box.....
PS-5080...Socket Receptacle 12 Pt.
PS-5084...Socket Female .093" (2)

J11.....Plug - Power Panel.....
PS-5077...Pin Housing 9 Pt.
PS-5083...Pin Male .093" (2)
PS-5078...Socket Receptacle 9 Pt.
PS-5084...Socket Female .093" (2)
PS-5085...Polarization Key

PB.....Silence Pushbutton
Pushbutton P9XPNNG
N.O. Contact Block P9B10VN
Nameplate V-1912
SL....."Alarm Silenced" pilot light
Base P9PDNVO
Amber lens P9XLAD
Bulb BA9S160
Nameplate V-1915

OPERATION

If Normal voltage fails and if emergency voltage is present, the transfer switch will transfer to the emergency position closing the A3R Auxiliary Contact. Alarm buzzer (BZ) is now energized to indicate ATS is in Emergency. To silence alarm buzzer press "PB". This will energize relay "RA" and silence alarm (SL) light. When the transfer switch restores to Normal, the CTAP is de-energized.

INSTRUCTIONS

1. Mount and wire "RA" relay, "XFR" transformer, and terminal block on auxiliary control panel.
2. Add "A3R" emergency auxiliary contact to power panel.
3. Add "SL" pilot light, "BZ" buzzer, "PB" silence pushbutton, and "FU" fuse and fuseholder to cabinet door.
4. Add wires to J9 plug using additional housing and sockets
5. Add J11 plug between Power Panel and Auxiliary Control Panel.
6. Delete (DS) Disconnect Switch on all units.

LEGEND	REFERENCE	NOTES

REVISIONS				
REV	ECN NO	DATE	DFT	ENG
A	S-6628	ESTABLISH DWG.		
B	S-6818	10/27/97	RMC	SB
C	S-6849	01/27/98	RMC	SB
D	S-7379-1	04/06/00	SG	SB

ZENITH CONTROLS, INC.
CHICAGO, IL 60669 USA

THIS DRAWING CONTAINS PROPRIETARY AND CONFIDENTIAL INFORMATION.
DUPLICATION, REPRODUCTION OR USE OF THIS DOCUMENT OR ITS CONTENTS IN ANY FORM OTHER THAN AS EXPRESSLY PERMITTED BY ZENITH CONTROLS, INC. IS STRICTLY PROHIBITED.

DWG TITLE:	CTAP ACCESSORY
JOB/MODEL:	MX100 (ZTG SERIES)

CHKD	APPD	CADD	ORDER NUMBER	DRAWING NUMBER
		ACAD	-	50R-1020

DRWN	ENGR	DATE	SCALE	SHEET	REV
SG	SB	12/23/96	-	1 OF 1	D

Katolight Service - Master Repair Manual - Page 4527

Drawing #50R-1008

SCHEMATIC

FIG. A (120 VAC SYSTEMS)

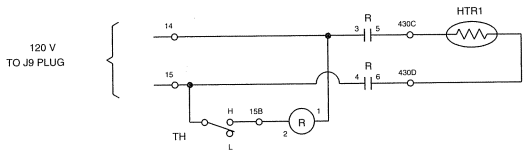

FIG. B (480 VAC SYSTEMS/120 VAC CONTROL VOLTAGE)

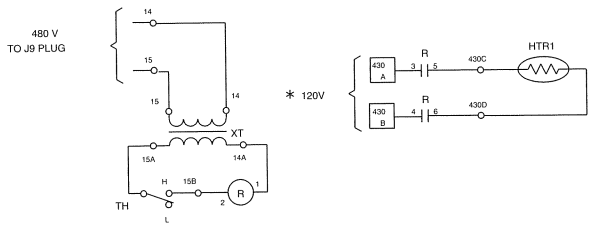

* Customer provides 120VAC control voltage

FIG.C (208 OR 240 VAC SYSTEMS)

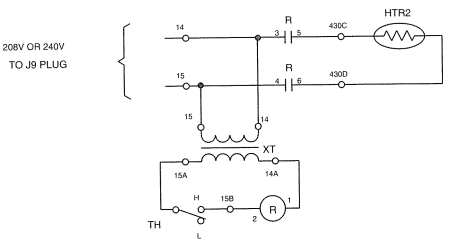

FIG.D(480 VAC SYSTEMS)

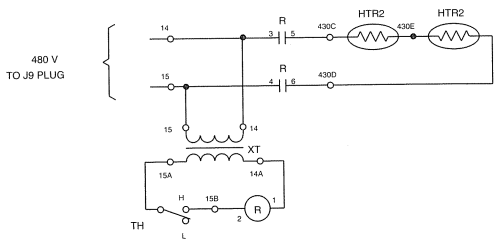

CABINET MOUNTING

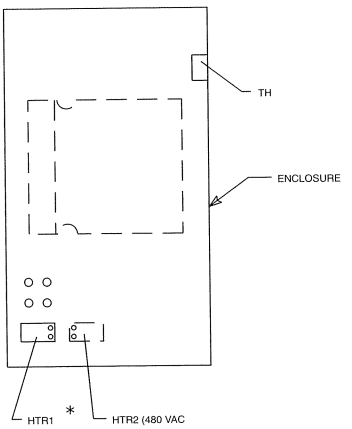

* THE HEATER WILL BE MOUNTED 1" BELOW THE NEUTRAL BAR MOUNTING HOLES.

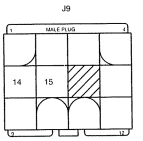

RELAY/TRANSFORMER BOX
TO AUXILIARY CONTROL PANEL

THERMOSTAT

LEGEND:

T1, T2.....	Load voltage from ATS
430A, 430B	Control voltage 120 V (for fig. B option only)
TH.....	Thermostat, PS-4822
HTR1	Strip heater, 125W., 120V, PS-7306
HTR2	Strip heater, 150W., 240 V, PS-7307
XT.....	Transformer 480/120 V, K-3026, 10 VA 240/120 V, K-3025, 10 VA 208/120 V, K-3106, 10 VA 277/120 V, K-3018, 10 VA 575/120 V, K-3022, 10 VA
R.....	Relay, DPDT: K-1086
J9 Plug-R/T Box.....	PS-5080... Socket Receptacle 12 Pt. PS-5084... Socket Female .093" (Qty. 2)

OPERATION:

When temperature in cabinet drops below thermostat set point, heater is turned "ON". Above set point, heater turns "OFF".

NOTES:

1. Thermostat factory set at 50 F unless otherwise specified.
2. Use wire (Y740033) for heater wiring.
3. (*)Use for Fig. A or Fig. B option only.
4. Mount Transformer and Relay on auxiliary control panel.

LEGEND	REFERENCE	NOTES

REVISIONS				
RV	ECN NO.	DATE	DRF	ENG
A	S-5757-A	ESTABLISH DWG.		
B	S-6449	05/15/96	ALA	SB
C	S-6849	01/27/98	RMC	SB

ZENITH CONTROLS, INC.

TITLE: HEATER AND THERMOSTAT				
MODEL: ZTG & ZTS SERIES				
DRFT: SDW	DATE:	SCALE:	CHK:	APPD:
ENGR: SB	12/04/95	N/A		
DWG NO.: 50R-1008				C REV
CADD: S5K		SHT. OF 1 1		

Katolight Service - Master Repair Manual - Page 4528

Drawing #50R-1001, Page 1

REVISIONS			
REV.	DESCRIPTION	DATE	APPROVED
L	S-7636 REVISED DWG	02/15/01	SB

CONNECTION DIAGRAM

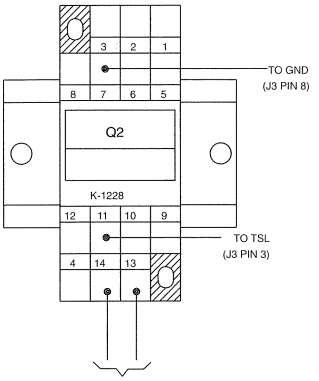

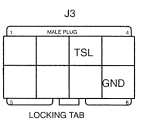

MX100 CONTROL PANEL
TO Q2 RELAY ON DIN RAIL

SCHEMATIC

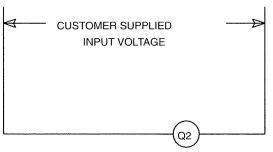

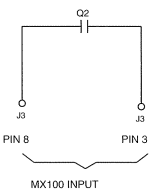

LEGEND

Q2 Relay.....	K-1232, 24VAC; K-1242, 24VDC; K-1204, 120VAC
	K-1228, Base
	PS-6161 Din Rail
J3 Plug - MX100.....	PS-5134 Socket Receptacle 8 pt. Mini
	PS-5127 Socket Female Mini (Qty. 2)

OPERATION

Q2 - Remote Peak Shave or Area Protection Circuit
Energize Q2 Relay to simulate a normal line failure causing the Generator to start and transfer the load to Emergency. Should Emergency fail during this operation, the transfer switch will retransfer back to Normal.

INSTRUCTIONS

Mount Q2 Relay on Din Rail on MX1OO Control Panel.

GE PROPRIETARY AND CONFIDENTIAL INFORMATION
This document is the property of General Electric ("GE") and contains proprietary information of GE. This document is loaned on the express condition that neither it nor the information contained therein shall be disclosed to others without the express written consent of GE Industrial Systems, and that the information shall be used by the recipient only as approved expressly by GE Industrial Systems. this document shall be returned to GE upon its request. This document may be subject to certain restrictions under U.S. export controls laws and regulations.

THIRD ANGLE PROJECTION

FOR ADDITIONAL INFO REFER TO
APPLIED PRACTICES
UNLESS OTHERWISE SPECIFIED DIMENSIONS ARE IN INCHES
TOLERANCES ON
2 PL. DECIMALS – .020
3 PL. DECIMALS – .005
ANGLES – 1
FRACTIONS – 1/64
FINISH

AutoCad Generated

SIGNATURES		DATE
MODEL	SG	02/15/01
DETAIL		
CHECKED		
ENGRG	SB	
MFG		
QUALITY		
ISSUED		

DRAWING FILE: 50r-1001-l-1.dwg
MODEL / ASSEMBLY FILE: MX100
CTQs
CRITICAL TO QUALITY CHARACTERISTIC

TITLE: Q2 ACCESSORY
FIRST MADE FOR

SIZE	CAGE CODE	DWG NO
B		50R-1001
SCALE: -		SHEET 1 OF 3

Katolight Service - Master Repair Manual - Page 4529

Drawing #50R-1001, Page 2

REVISIONS			
REV.	DESCRIPTION	DATE	APPROVED
L	S-7636 REVISED DWG	02/15/01	SB

CONNECTION DIAGRAM

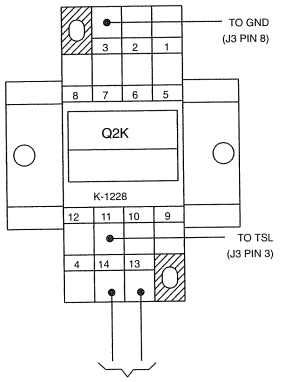

CUSTOMER SUPPLIED
INPUT VOLTAGE

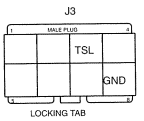

MX100 CONTROL PANEL
TO Q2K RELAY ON DIN RAIL

SCHEMATIC

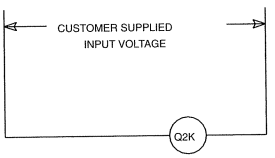

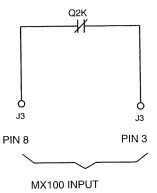

MX100 INPUT

LEGEND

Q2K Relay..... K-1232, 24VAC; K-1242, 24VDC; K-1204, 120VAC
K-1228, Base
PS-6161 Din Rail

J3 Plug - MX100..... PS-5134 Socket Receptacle 8 pt. Mini
PS-5127 Socket Female Mini (Qty. 2)

OPERATION

Q2K - Remote Peak Shave or Area Protection Circuit
De-energize Q2K Relay to simulate a normal line failure causing the Generator to start and transfer the load to Emergency. Should Emergency fail during this operation, the transfer switch will retransfer back to Normal.

INSTRUCTIONS

Mount Q2K Relay on Din Rail on MX1OO Control Panel.

GE PROPRIETARY AND CONFIDENTIAL INFORMATION
This document is the property of General Electric ("GE") and contains proprietary information of GE. This document is loaned on the express condition that neither it nor the information contained therein shall be disclosed to others without the express written consent of GE Industrial Systems, and that the information shall be used by the recipient only as approved expressly by GE Industrial Systems. this document shall be returned to GE upon its request. This document may be subject to certain restrictions under U.S. export controls laws and regulations.

THIRD ANGLE PROJECTION

FOR ADDITIONAL INFO REFER TO
APPLIED PRACTICES
UNLESS OTHERWISE SPECIFIED DIMENSIONS ARE IN INCHES
TOLERANCES ON
2 PL. DECIMALS - .020
3 PL. DECIMALS - .005
ANGLES - 1
FRACTIONS - 1/64
FINISH
AutoCad Generated

SIGNATURES		DATE
MODEL	SG	02/15/01
DETAIL		
CHECKED		
ENGRG	SB	
MFG		
QUALITY		
ISSUED		

DRAWING FILE: 50r-1001-l-2.dwg
MODEL / ASSEMBLY FILE: MX100
CTQs
CRITICAL TO QUALITY CHARACTERISTIC

TITLE: Q2K ACCESSORY
FIRST MADE FOR

SIZE	CAGE CODE	DWG NO
B		50R-1001
SCALE: -		SHEET 2 OF 3

Katolight Service - Master Repair Manual - Page 4530

Drawing #50R-1001, Page 3

REVISIONS			
REV.	DESCRIPTION	DATE	APPROVED
L	S-7636 REVISED DWG	02/15/01	SB

CONNECTION DIAGRAM

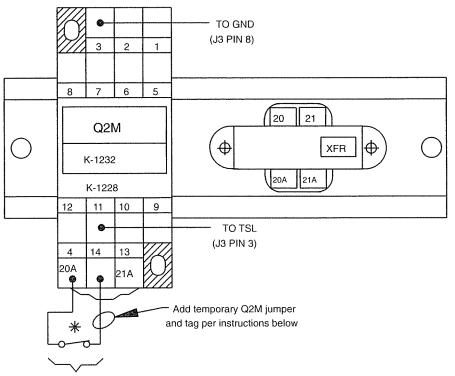

EXTERNAL CONTACT N.C.
(CUSTOMER SUPPLIED)

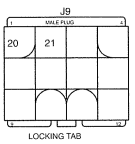

RELAY/TRANSFORMER BOX
TO XFR ON DIN RAIL

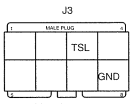

MX100 CONTROL PANEL
TO Q2M RELAY ON DIN RAIL

SCHEMATIC

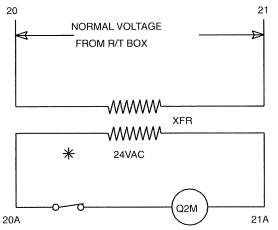

EXTERNAL
CONTACT N.C.
(CUSTOMER
SUPPLIED)

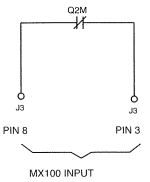

✳ NOTE -MAX DISTANCE EXTERNAL CONTACT CAN BE LOCATED FROM CONTROLLER

AWG	MAX FT
18	400
16	650
14	1000

LEGEND

Q2M RELAY.....	K-1232, 24 VAC	
	K-1228, Base	
	PS-6161 Din Rail	
J3 Plug - MX100.....	PS-5134 Socket Receptacle 8 pt. Mini	
	PS-5127 Socket Female Mini (Qty. 2)	
J9 Plug-R/T Box.....	PS-5080.....	Socket Receptacle 12 Pt.
	PS-5084.....	Socket Female .093" (Qty. 2)
XFR.....	Transformer 10VA	
	K-3102 208/24 VAC	
	K-3103 240/24 VAC	
	K-3104 277/24 VAC	
	K-3105 480/24 VAC	
	K-3107 575/24 VAC	

OPERATION

Q2M - Remote Peak Shave or Area Protection Circuit
Open external N.C. contact to simulate a normal line failure causing the Generator to start and transfer the load to Emergency. Should Emergency fail during this operation, the transfer switch will retransfer back to Normal.

INSTRUCTIONS

1. Add temporary Q2M jumper. Identify with tag marked "TEMPORARY Q2M JUMPER".
2. Mount Q2M Relay and XFR Transformer on Din Rail on MX100 Control Panel.

GE PROPRIETARY AND CONFIDENTIAL INFORMATION
This document is the property of General Electric ("GE") and contains proprietary information of GE. This document is loaned on the express condition that neither it nor the information contained therein shall be disclosed to others without the express written consent of GE Industrial Systems, and that the information shall be used by the recipient only as approved expressly by GE Industrial Systems. this document shall be returned to GE upon its request. This document may be subject to certain restrictions under U.S. export controls laws and regulations.

THIRD ANGLE PROJECTION

FOR ADDITIONAL INFO REFER TO
APPLIED PRACTICES
UNLESS OTHERWISE SPECIFIED DIMENSIONS ARE IN INCHES

TOLERANCES ON:
2 PL. DECIMALS – .020
3 PL. DECIMALS – .005
ANGLES – 1
FRACTIONS – 1/64
FINISH

AutoCad Generated

SIGNATURES		DATE
MODEL	SG	02/15/01
DETAIL		
CHECKED		
ENGRG	SB	
MFG		
QUALITY		
ISSUED		

DRAWING FILE: 50r-1001-I-3.dwg
MODEL / ASSEMBLY FILE: MX100
CTQs:
CRITICAL TO QUALITY CHARACTERISTIC

TITLE: Q2M ACCESSORY
FIRST MADE FOR:

SIZE	CAGE CODE	DWG NO
B		50R-1001

SCALE: -
SHEET 3 OF 3

Katolight Service - Master Repair Manual - Page 4531

Drawing #50R-1024

REVISIONS			
REV.	DESCRIPTION	DATE	APPROVED
D	S-7636 REVISED DWG	02/15/01	SB

CONNECTION DIAGRAM

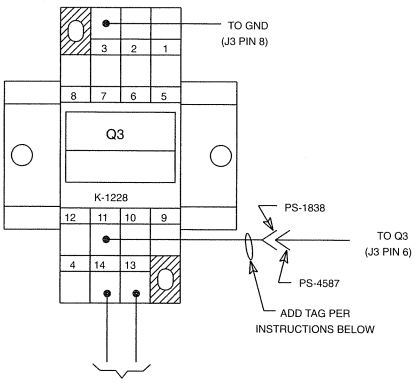

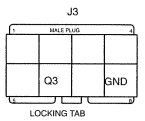

MX100 CONTROL PANEL
TO Q3 RELAY ON DIN RAIL

SCHEMATIC

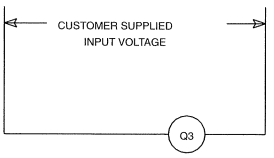

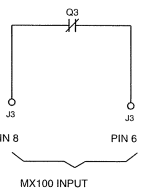

LEGEND

Q3 Relay.....	K-1232, 24VAC; K-1242, 24VDC; K-1204, 120VAC
	K-1228, Base
	PS-6161 Din Rail
J3 Plug - MX100.....	PS-5134 Socket Receptacle 8 pt. Mini
	PS-5127 Socket Female Mini (Qty. 2)

OPERATION

Q3 - Remote Inhibit Transfer to Emergency Circuit.
Voltage applied to Q3 input will allow transfer to Emergency, conversely, no input on Q3 will result in no transfer to Emergency. To enable Q3 option engage Q3 jumper.

INSTRUCTIONS

1. Add tag marked "TO ENABLE Q3 OPTION ENGAGE Q3 JUMPER".
2. Q3 Relay on Din Rail on MX1OO Control Panel.

GE PROPRIETARY AND CONFIDENTIAL INFORMATION
This document is the property of General Electric ("GE") and contains proprietary information of GE. This document is loaned on the express condition that neither it nor the information contained therein shall be disclosed to others without the express written consent of GE Industrial Systems, and that the information shall be used by the recipient only as approved expressly by GE Industrial Systems. this document shall be returned to GE upon its request. This document may be subject to certain restrictions under U.S. export controls laws and regulations.

THIRD ANGLE PROJECTION

FOR ADDITIONAL INFO REFER TO
APPLIED PRACTICES
UNLESS OTHERWISE SPECIFIED DIMENSIONS ARE IN INCHES
TOLERANCES ON
2 PL. DECIMALS – .020
3 PL. DECIMALS – .005
ANGLES – 1
FRACTIONS – 1/64
FINISH

AutoCad Generated

SIGNATURES		DATE
MODEL	SG	02/15/01
DETWL		
CHECKED		
ENGRG	SB	
MFG		
QUALITY		
ISSUED		

DRAWING FILE: 50r-1024-d-1.dwg
MODEL / ASSEMBLY FILE: MX100
CTQs:
CRITICAL TO QUALITY CHARACTERISTIC

TITLE: Q3 ACCESSORY
FIRST MADE FOR

SIZE	CAGE CODE	DWG NO
B		50R-1024
SCALE: -		SHEET 1 OF 1

Katolight Service - Master Repair Manual - Page 4532

Drawing #50R-1010

CONNECTION TO MX100 CONTROL PANEL:

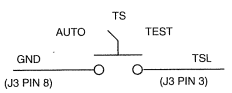

TS MOUNTED ON DOOR OF ENCLOSURE

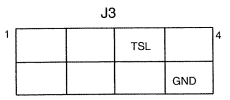

MX100 CONTROL PANEL
TO TEST SWITCH CONTACT

LEGEND:

6A..... Maintained Test Switch
P9XSMD0N, 2 Pos. Operator
P9B10VN, N.O. Contact Block
V-1505, Nameplate

J3..... Plug - MX100
PS-5134...Socket Receptacle 8 pt. Mini
PS-5127...Socket Female Mini (Qty. 2)

OPERATION:

When activated in the TEST position, TS will simulate a normal line failure.
The TS will automatically transfer the load to the emergency position.
When the test switch is returned to the AUTOMATIC position, the transfer switch will restore the load to the normal line position.
is in the Emergency position, the ATS will transfer back to Normal.

Should Emergency fail while the ATS

LEGEND	REFERENCE	NOTES

REVISIONS

REV	ECN NO	DATE	DFT	ENG
A	S-5149	ESTABLISH DWG.		
B	S-7379-1	04/06/00	SG	SB

ZENITH CONTROLS, INC.
CHICAGO, IL 60609 USA

THIS DRAWING CONTAINS PROPRIETARY AND CONFIDENTIAL INFORMATION
DUPLICATION, REPRODUCTION OR USE OF THIS DOCUMENT OR ITS CONTENTS IN ANY FORM OTHER THAN AS EXPRESSLY PERMITTED BY ZENITH CONTROLS, INC. IS STRICTLY PROHIBITED

DWG TITLE: 6A TEST SWITCHES
JOB/MODEL: MX100

CHKD:	APPD:	CADD:	ORDER NUMBER:	DRAWING NUMBER:
		ACAD: -		50R-1010

DRWN:	ENGR:	DATE:	SCALE:	SHEET:	REV:
ALA	SB	25/15/96	-	1 OF 1	B

Katolight Service - Master Repair Manual - Page 4533

Drawing #50R-1022

COMPONENT LAYOUT

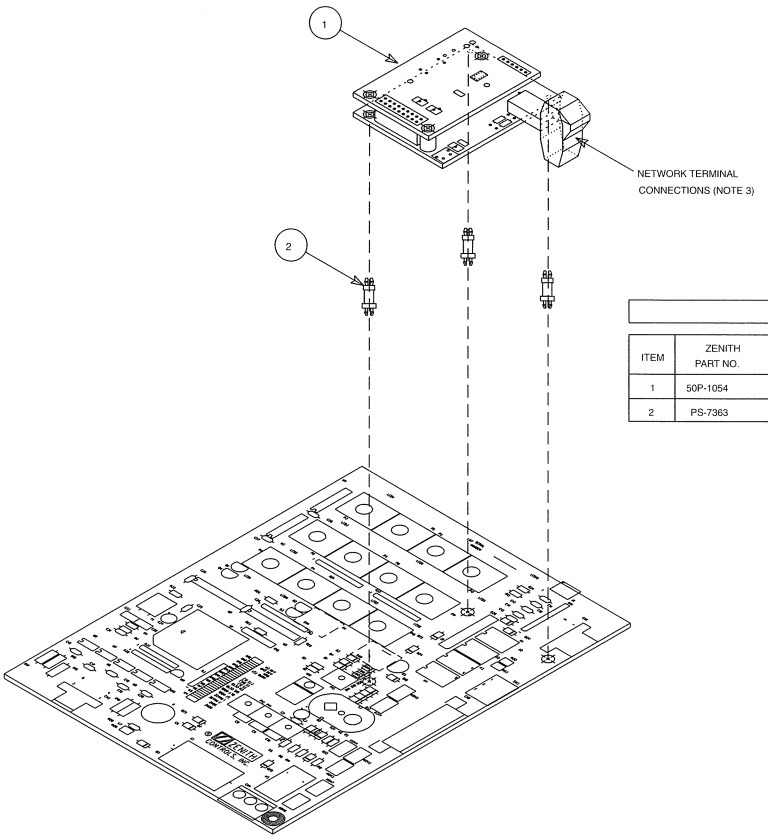

LEGEND

ITEM	ZENITH PART NO.	DESCRIPTION	QTY.
1	50P-1054	MX100 NETWORK CARD	1
2	PS-7363	STANDOFF	3

INSTRUCTIONS

NOTES:

1. DISCONNECT ALL POWER TO MX100 PC BOARD AND DISCHARGE CAP BEFORE PLUGGING IN NETWORK CARD.
2. GROUND YOURSELF AND FOLLOW ESD PRECAUTIONS WHEN HANDLING NETWORK CARD AS WELL AS MX100 PC BOARD.
3. NETWORK CABLE TO BE BELDEN 8471, 16WG (UNSHIELDED TWO CONDUCTOR TWISTED PAIR) NOT INCLUDED.

OPERATION

NETWORK CARD ALLOWS COMMUNICATION OF ATS POSITION, AVAILABLE SOURCE AND TIMERS RUNNING TO A REMOTE ANNUNCIATOR PANEL, PC OR PLC VIA ONE PAIR OF TWISTED WIRES.

ALA	NLS	DWN	DWG	TOLERANCES: DECIMAL XX ±.015 XXX ±.005 ANGULAR ±1 FRACTIONAL ±1/64 UNLESS OTHERWISE SPECIFIED	ZENITH CONTROLS, INC. CHICAGO, IL 60603 USA
01/27/98	ESTABLISH DRAWING	DATE	DESCRIPTION	REF ASSY: SEE DATABASE	THIS DRAWING CONTAINS PROPRIETARY AND CONFIDENTIAL INFORMATION. DUPLICATION, REPRODUCTION OR USE OF THIS DOCUMENT OR ITS CONTENTS IN ANY FORM OTHER THAN AS EXPRESSLY PERMITTED BY ZENITH CONTROLS, INC. IS STRICTLY PROHIBITED
S-6702-1		ECN NO.		FINISH: PER PART SPECIFICATION	DWG TITLE: MX100 NETWORK COMMUNICATIONS
					JOB/MODEL: MX100
A		REV		MATERIAL:	CHKD: / APPD: / CADD: ACAD / ORDER NUMBER: - / DRAWING NUMBER: 50R-1022
					DRWN: ALA / ENGR: NLS / DATE: 01/27/98 / SCALE: N/A / SHEET: 1 OF 1 / REV: A

Katolight Service - Master Repair Manual - Page 4534



GE Zenith Controls

GE Industrial Systems – Power Equipment Business
General Electric Company
830 West 40th Street, Chicago, IL 60609 USA
773 299-6600, Fax: 773 247-7805
www.zenithcontrols.com

GE Zenith Controls

ZTS/ZTSD Series Transfer Switches
40-4000 Amps

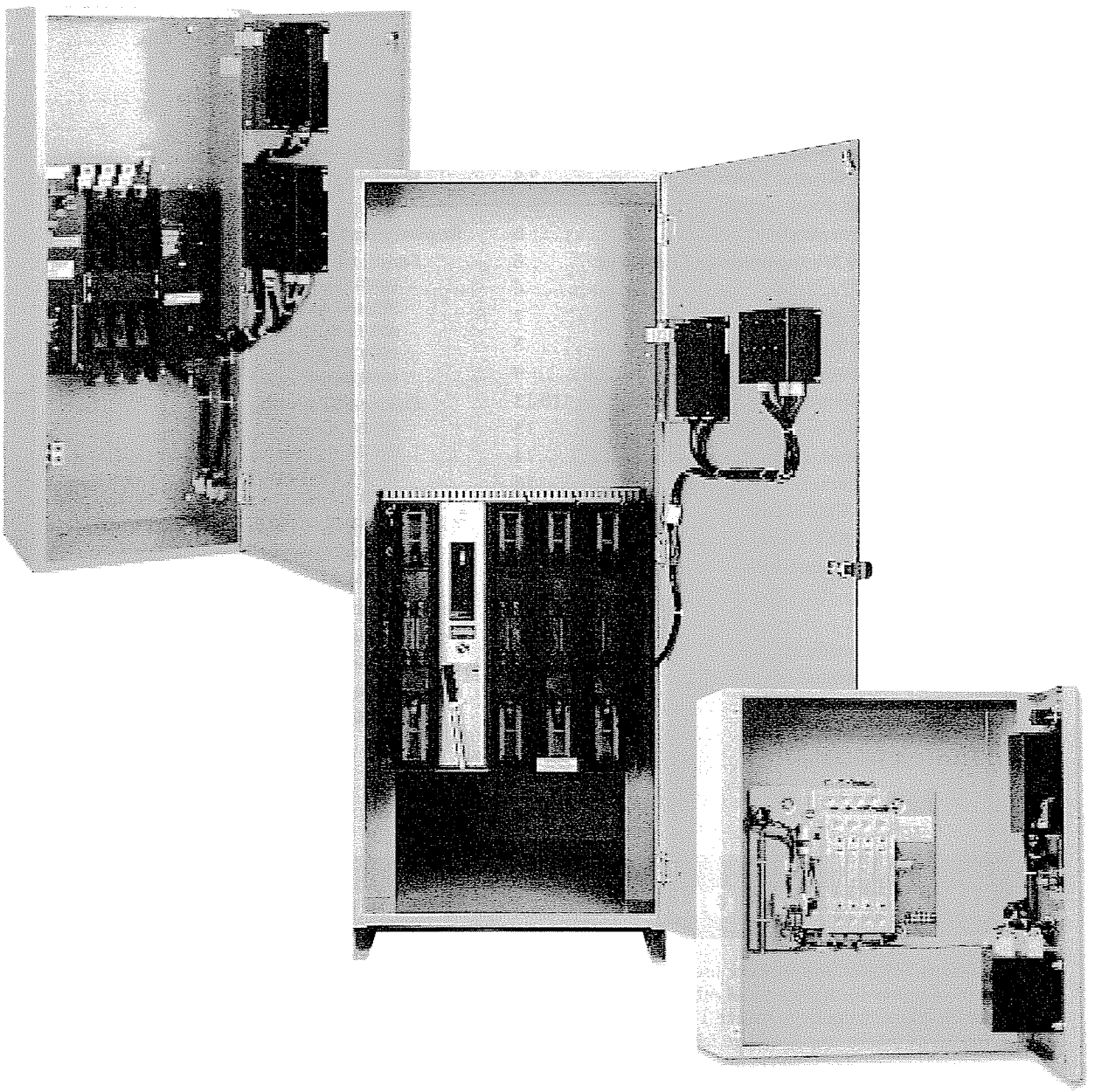

71R-3000
5/03

Operation and Maintenance Manual

Katolight Service - Master Repair Manual - Page 4537

Authorized Service

For GE parts and service, call: 773 299-6600

Table of Contents

	Page
Introduction	ii
Safety	1
Equipment Inspection and Storage	1
Final Equipment Inspection	1
Mounting	1
Installation	2
Power Connections	2
Engine Start Control Connections	2-3
Initial Energization	3-4
Control Connections	5
Entelli-Switch 250 Microprocessor Controller	6
Overview	6
LCD & Keypad	7
User Setting for Voltage & Frequency	8
Accessory Group Packages	9
Accessory Definitions	10-13
How to Set the System Clock	13
CDT One Event Timer Exerciser	14
CDP Clock Exerciser	15
User Setup - CFG Menu	16
User Setup - SET Menu	17
User Setup - System Info	18
Testing	19
ATS Testing	19
Standard Transition	19
Delayed Transition	19
Sequence of Operation	20
Standard Transition	20
Delayed Transition	20

	Page
Relay/Transformer (R/T Box)	21
Standard	21
Delayed	22
Schematics	23
Troubleshooting & Diagnostics	24
Maintenance and Testing	25
Inspection and Cleaning	25
Servicing	25
Testing	25
Replacement Parts	26
Standard Transition	26
40-200 Amps	26
225-400 Amps	27
600-1200 Amps	28
1600-3000 Amps	29
4000 Amps	30
Delayed Transition	31
40-400 Amps	31
600-1200 Amps	32
1600-3000 Amps	33
4000 Amps	34
ZTSH/ZTSDH/ZTSDL/ZTSHL/ZTSDHL	35
Standard Control Panel Layout (SSRCP)	35
Panel Mount Control Relays	35
Sequence of Operation	36
Adjustments and Settings	37
Solid State Timers	37
Voltage/Frequency Sensor (VSFM)	37
Solid State Phase Relay	37

Introduction

GE Zenith Transfer Switches are used to provide a continuous source of power for lighting and other critical loads by automatically transferring from source 1 power to source 2 power in the event that source 1 voltage falls below preset limits.

Voltage sensing and system control is performed via a state-of-the-art microcontroller located on the cabinet door. It is designed to give highly accurate control of the transfer switch system.

All GE Zenith transfer switches are designed for use on emergency or standby systems, and are rated for total system or motor loads. Transfer switches are UL Listed under Standard 1008 and CSA Certified under Standard C22.2 No. 178 and IEC Listed under Standard 947.

NOTES:

A protective device such as a molded case circuit breaker or fused disconnect switch MUST be installed on both sources of incoming power for circuit protection and as a disconnection device.

All references made within this manual about the term "S1" or "Source 1" relate to a Normal Power Source. All references made about the term "S2" or "Source 2" relate to an Emergency or Alternative Power Source.

Safety

⚠ DANGER ⚠

HAZARDOUS VOLTAGE
(Can Cause Severe Injury or Death)

Turn OFF all power before installation, adjustment, or removal of transfer switch or any of its components.

The safe operation of your switch is GE Zenith's focus. The proper storage, installation, operation and maintenance will help increase the life of the switch.

⚠ CAUTION ⚠

Due to hazardous voltage and current, GE Zenith recommends that a GE Zenith Certified technician or a qualified electrician must perform the installation and maintenance of the switch.

Equipment Inspection and Storage

Once you have received the transfer switch, inspect it for any damage. This includes damage to the enclosure, power panel, control panel and wiring harness. If any damage is found or suspected, file a claim as soon as possible with the carrier and notify the nearest GE Zenith representative.

Before installation, if it is necessary, store the transfer switch in a clean dry place, protected from dirt and water. Provide ample air circulation and heat, if necessary, to prevent condensation.

Storage Temperature	Operating Temperature (Ambient):	Humidity
-30°C to +75°C (-22°F to +167°F)	**40-400 AMP** *(molded shell)* -20°C to +65°C (-4°F to +149°F) **40-4000 AMP** *(all other frame and panel types)* -20°C to +60°C (-4°F to +140°F)	5% to 95% (non-condensing)

Final Equipment Inspection

Prior to energizing the transfer switch:

1. Remove any debris incurred, with a vacuum, due to shipment or installation.

⚠ WARNING ⚠

Do not use a blower since debris may become lodged in the electrical and mechanical components and cause damage.

2. Verify that all cabled connections are correct and that phase rotation of both sources match.
3. Check engine start connections.
4. Verify the correct connection of all control wires.
5. Check settings of all timers and adjust as necessary.
6. Adjust any optional accessories as required.
7. Check the lug torque values of the power connections.

   NOTE: Lug torque values are specified in table 2 on pg.2.

8. Make sure that all covers and barriers are installed and properly fastened.

   NOTE: Power panels ship from GE Zenith in Source 1 Position.

Each GE Zenith transfer switch is factory wired and tested. A complete information package is furnished with each switch which includes:

a. Sequence of operation.
b. Description and operation of all accessories supplied.
c. Power panel connection diagram and schematic.
d. Description and identification of all customer field connections.

Installation of GE Zenith transfer switches includes:

a. Mounting the transfer switch cabinet.
b. Connection of Source 1, Source 2, and Load cables or bus bars.
c. Connection of external control circuits as required.

Mounting

Adequate lifting means must be used to mount the transfer switch into place. The recommended method for moving the transfer switch using the lifting eyes, where supplied, and a spreader bar is illustrated in *Figure 1.* Enough room should be allowed to open the cabinet doors fully for inspection and servicing of the switch per NEC and local codes.

⚠ CAUTION ⚠

Before drilling conduit entry holes or any accessory mounting holes, cover and protect the switch and control panel to prevent dirt and metal fragments from entering the mechanical and electrical components.

Failure to do so may result in damage and malfunction of the switch.

Katolight Service - Master Repair Manual - Page 4539

Installation

⚠ DANGER ⚠

HAZARDOUS VOLTAGE
(Can Cause Severe Injury or Death)

Turn OFF all power before installation, adjustment, or removal of transfer switch or any of its components.

Power Connections

GE Zenith transfer switches are supplied with UL listed solderless screw type terminals as standard for the Source 1, Source 2 and Load power connections. *Table 1* lists the number and sizes of cable lugs supplied as standard for each switch amp rating.

Connect the Source 1, Source 2, and Load conductors to the clearly marked terminals on the transfer switch. Remove surface oxides from cables by cleaning with a wire brush. Verify that all connections are correct before tightening the lugs. All cable lug connections must be tightened to the proper torque values as shown in *Table 2*.

NOTE: Do not run cables or wiring behind front-connected transfer switches.

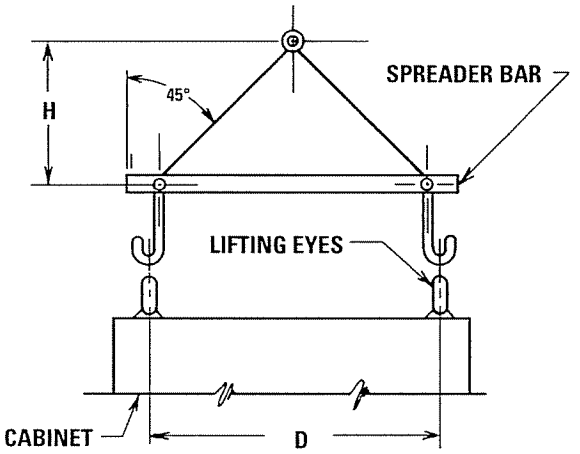

Figure 1

NOTE: When lifting the switch using a spreader bar, height H must be equal to half of distance D.

Power Connections: Screw Type Terminals for External Power Connections				
Switch Size (Amps)	Source 1, Source 2 & Load Terminals		Neutral Bar (When Required)	
	Cable Per Pole	Range of Wire Sizes	No. of Cables	Range of Wire Sizes
40	1	#8 AWG to 1/0	3	#8 AWG to 1/0
80	1	#8 AWG to 1/0	3	#8 AWG to 1/0
100	1	#8 AWG to 1/0	3	#8 AWG to 1/0
150	1	#8 AWG to 3/0	3	#8 AWG to 300 MCM
200, 225, 2500	1	#6 AWG to 250 MCM	3	#6 AWG to 300 MCM
260, 300*, 400	1	#4 AWG to 600 MCM	3	#4 AWG to 300 MCM
600	2	#2 AWG to 600 MCM	8	#2 AWG to 600 MCM
800, 1000, 1200	4	#2 AWG to 600 MCM	12	#2 AWG to 600 MCM
1600, 2000 2600, 3000, 4000	Line, Load and Neutral terminals are located in the rear of switch and arranged for bus bar locations			

Table 1

Engine Start Control Connections

Engine-start control wires connect to control terminals beside the Entelli-Switch 250. Engine start terminals are indicated by a schematic symbol (the symbol indicates the contact state for a de-energized normal source). *Figure 2* shows the engine-start contacts.

Make all other necessary control connections to the control panel terminal blocks per the schematics supplied with the ATS.

NOTE: All control wires (18-12 AWG) must be torqued to 19 in/lbs.

Tightening Torque for Lugs		
Socket Size Across Flats	Torque	
	Lb. - In.	Lb. - Ft.
1/8	45	4
5/32	100	8
3/16	120	10
7/32	150	12
1/4	200	17
5/16	275	23
3/8	375	31
1/2	500	42
9/16	600	50

Table 2

Katolight Service - Master Repair Manual - Page 4540

⚠ DANGER ⚠

HAZARDOUS VOLTAGE
(Can Cause Severe Injury or Death)

Turn OFF all power before installation, adjustment, or removal of transfer switch or any of its components.

E

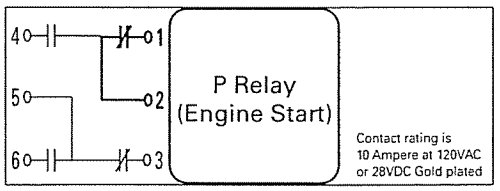

Figure 2

Engine Start Control Connections

The engine-start terminals are clearly identified by a label on the microcontroller backplate. In the case of manual transfer switches, or in other applications not requiring the microprocessor, clearly marked terminal blocks are provided in the upper left corner of the control panel for the engine start control wires.

Transfer Switch. Figure 5 (pg.5) shows location of engine start connections for Automatic Transfer Switch.

Terminals for field connections to the A3 Source 2 auxiliary contacts and the A4 Normal auxiliary contacts are also provided. These terminals are clearly marked and appear on the side of the power panel. On 400 amp metal frame units these terminals appear on the bracket above the operator handle.

Initial Energization

Before proceeding, refer to the information package supplied with the ATS and read and understand the information on all accessories provided.

1. Unlock the enclosure.
2. Open the enclosure.
3. Verify the correct system voltage.

   NOTE: The equipment rating nameplate on the transfer switch lists the voltage. See *Figure 3.*

4. Close Source 1 circuit. breaker.

   NOTE: The controller will illuminate Source 1 Available LED if proper voltage is sensed.

5. Verify the phase to phase voltages at Source 1 line terminals.
6. Close Source 2 source circuit breaker.
7. Start the generator's engine.

   NOTE: The controller will illuminate Source 2 Available LED when preset voltage and frequency levels are reached.

8. Verify the phase to phase voltages at Source 1 line terminals.
9. Verify that the phase rotation of Source 1 is the same as the phase rotation of Source 2.



10. Shut down the generator's engine.
11. Place the starting control in the Automatic position.
12. Complete the visual inspection of the transfer switch.
13. Close the enclosure.
14. Lock the enclosure.

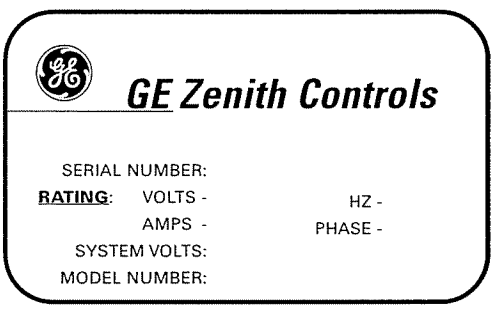

Figure 3

⚠ CAUTIONS ⚠

Certain accessories, per specific schematics, can inhibit automatic transfer.

Engine Gen-Set could start when engine control wires are attached.

Katolight Service - Master Repair Manual - Page 4541

Initial Energization (cont'd)

After all options and accessories are checked and verified, follow these steps to set up the ATS. Refer to Entelli-Switch 250 display *Figure 4*. The annunciation LEDs illuminate to indicate (1) source availability, (2) ATS position, and (3) Entelli-Switch 250 control function (timing).

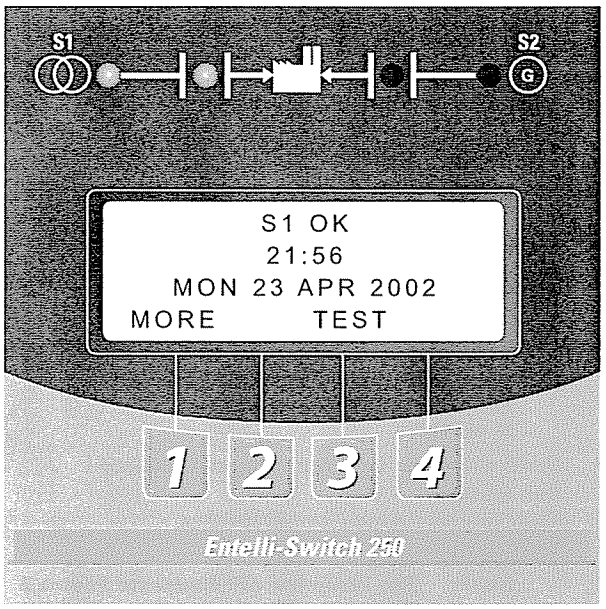

Figure 4 – LCD and keypad

1. Unlock the enclosure.
2. Open the enclosure.
3. Place the Disconnect Switch in the Inhibit.

   NOTE: This step is only performed if the "DS" Option was purchased.

4. Close the external (up-stream) Source 1 circuit breaker.

   NOTES: Source 1 Available and Source 1 Position LED's will illuminate.

   If Source 1 Available LED does not illuminate, verify that Source 1 Voltage is above the preset restore value.

   The Gen-Set will start and run while Source 2 stop Delay Timer is timing.

5. Close the External (up-stream) Source 2 line circuit breaker.
6. Start the engine generator in MANUAL mode.

   NOTE: When the voltage and frequency reach preset values, the Source 2 Available LED will illuminate.

7. Verify the phase to phase voltages at Source 2 line terminals.
8. Verify that the phase rotation of Source 2 is the same as the phase rotation of Source 1.



9. Shut down the generator's engine. (Place in Automatic Mode.)

   NOTE: Source 2 Available LED will turn off.

   NOTE: The engine generator will continue to run for the duration of Source 2 Stop Delay Timer.

10. Place the disconnect switch to ENABLE.
11. Complete the visual inspection of the transfer switch.
12. Close the enclosure.
13. Lock the enclosure.

⚠ WARNING ⚠

When performing a hi-pot or dielectric test on the power section, DISCONNECT the control panel plugs from the microprocessor to avoid potential damage.

Katolight Service - Master Repair Manual - Page 4542

⚠ DANGER ⚠

HAZARDOUS VOLTAGE
(Can Cause Severe Injury or Death)

Turn OFF all power before installation, adjustment, or removal of transfer switch or any of its components.

Control Connections

Figure 5

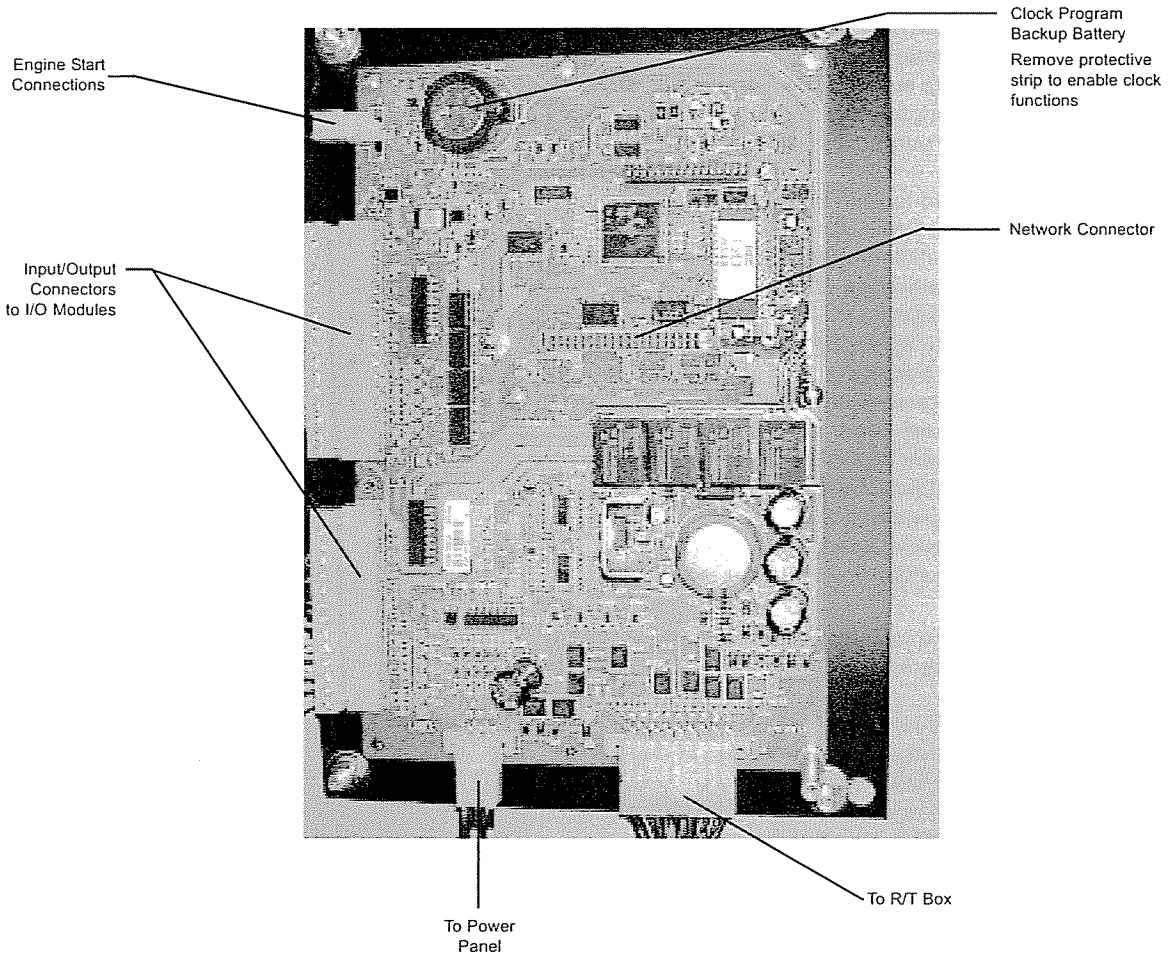

A complete information package is furnished with each transfer switch including a complete connection diagram and schematic which details all necessary control circuit field connections.

The engine start control wires connect to the engine start relay terminals located to the left of the microprocessor. Figure 5 shows the location of these terminals.

The terminals are clearly identified by a label on the microcontroller backplate. In the case of manual transfer switches, or in other applications not requiring the microprocessor, clearly marked terminal blocks are provided in the upper left corner of the control panel for the engine start control wires.

Katolight Service - Master Repair Manual - Page 4543

Entelli-Switch 250 Controller

Consists of two major assemblies:

I. The **Microprocessor** contains the following:

A. Entelli-Switch 250 Board - Customer Input and Output (I/O) for system interface. Located on the left hand side of the back of the unit (see figure 6)

1. I/O accessories that can be found here are:
   a. Engine start relay P output
   b. Pre-Signal to transfer T3, W3 and UMD output (optional)
   c. Transfer Inhibit Q3 and Q7 input (optional)
   d. Remote test Q2 input (optional)
   e. Network interface ZNET input/output (optional)

B. LCD and Keypad located on the exterior of the door (see figure 7)

1. User accessibility to the following:
   a. LED indication of source availability
   b. LED indication of transfer switch position
   c. LCD screen indicates:
      (1) timer count down (numeric)
      (2) event reporting (text)
   d. Keypad provides user interface to: *[in conjunction with LCD screen]*
      (1) Setting sensors and timers
      (2) Configuring logic accessories

II. The **R/T box** (relay transformer box) contains the following: (see figure 6)

A. Relays which are required for controller output to energize the transferring mechanism of the transfer switch at line voltage.

B. Transformers which drop line voltage to control level for controller input.

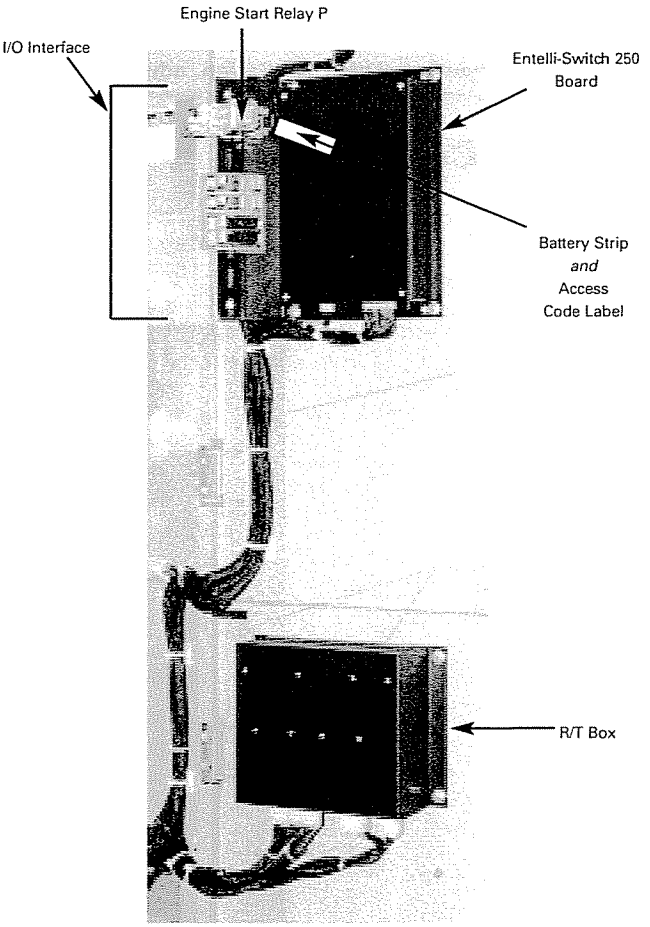

Figure 6

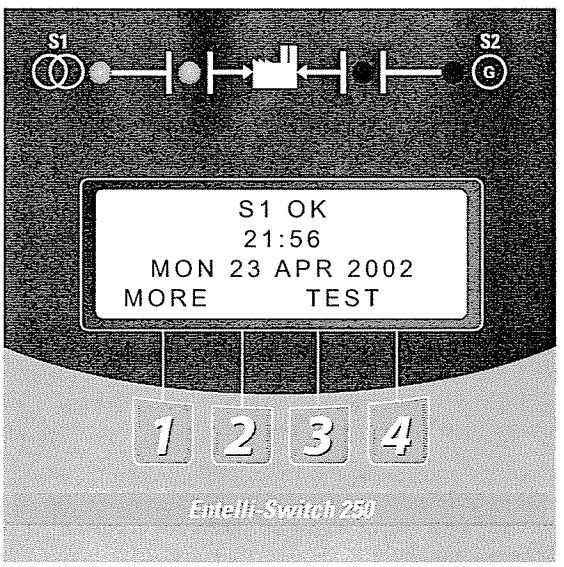

Figure 7

Katolight Service - Master Repair Manual - Page 4544

LCD & Keypad

These options are accessible through the LCD and keypad (see figure below). To become familiar with the options loaded into a particular unit, scrolling through the SET and CFG menu will show the descriptions of the options (see pages 16-17). These menus are the very same menus that are used to access the setting and/or configuration of these options. The SET (setting) menu is primarily used to show or change, time and voltage settings. The CFG menu is primarily used to turn an option on or off. When scrolling through these menus, no changes can be made without entry of the access code. The factory set six-digit access code is located on a white label on the back of the unit (see figure 10 pgs. 16-18).

The Entelli-Switch 250 has many logic options. Each controller is downloaded with options at the time of manufacture. The collection of options that any one controller has is specified at the time of order placement. The following pages include all the options that can reside in the controller. Not all units include all options.

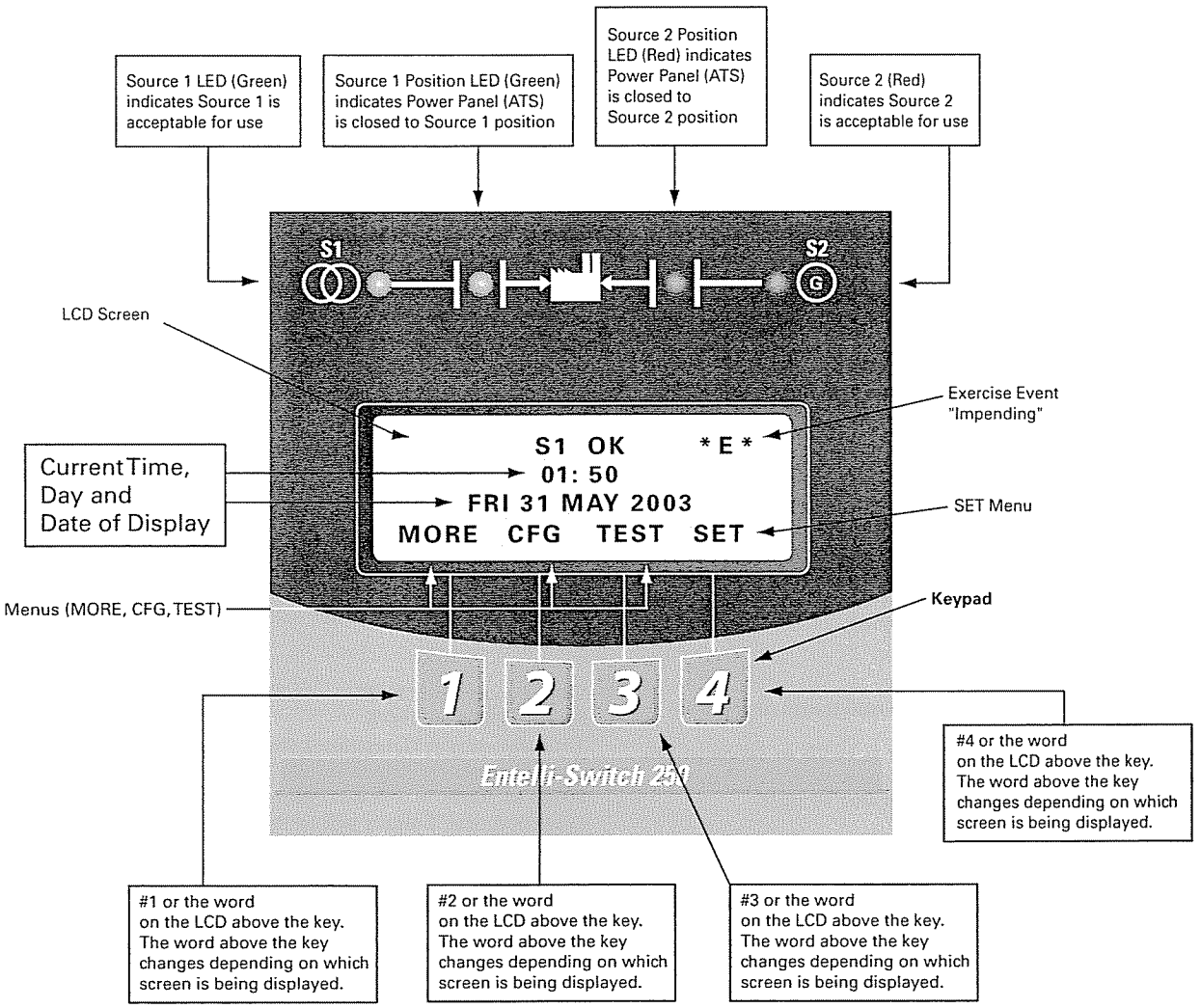

Figure 8

Katolight Service - Master Repair Manual - Page 4545

User Setting for Voltage & Frequency

Standard 3-Phase Sensing on 3 and 4 Pole Units

Source 1

Under Voltage "Restore"
Factory Default: 90%
This adjustment determines the minimum acceptable voltage required to transfer to Source 1.
Adjust via the SET menu. Range is 85% to 100% in 1% increments (see page 17).
Once satisfied, the T timer will begin timing to transfer to Source 1.

Under Voltage "Fail"
Factory Default: 80%
This adjustment determines the low voltage threshold.
Adjust via the SET menu. Range is 75% to 98% in 1% increments (see page 17).
"Fail" must be a minimum of 2 % below "Restore" setting. Once voltage falls below threshold, P timer begins timing to signal Source 2 Generator to start.

Under Frequency "Restore"
Factory Default: 95%
This adjustment determines the minimum acceptable frequency required to transfer to Source 1.
Adjust via the SET menu. Range is 90% to 100% in 1% increments (see page 17).
Once satisfied, the T timer will begin timing to transfer to Source 1.

Under Frequency "Fail"
Factory Default: 90%
This adjustment determines the low frequency threshold.
Adjust via the SET menu. Range is 88% to 98% in 1% increments (see page 17).
"Fail" must be a minimum of 2 % below "Restore" setting. Once satisfied, the T timer will begin timing to transfer to Source 1.

Over Frequency "Restore"
Factory Default: 102%
This adjustment determines the minimum acceptable Over Frequency threshold at which the transfer switch is allowed to re-transfer to Source 1.
Adjust via the SET menu. Range is 102% to 104% in 1% increments (see page 17). "Restore" must be a minimum of 1% below "Fail" setting.

Over Frequency "Fail"
Factory Default: 105%
This adjustment determines the maximum acceptable Over Frequency.
Adjust via the SET menu. Range is 103% to 105% in 1% increments (see page 17).Once exceeded, the P timer begins timing to signal the generator to start.

Source 2

Under Voltage "Restore"
Factory Default: 90%
This adjustment determines the minimum acceptable voltage required to transfer to Source 2.
Adjust via the SET menu. Range is 85% to 100% in 1% increments (see page 17).
Once satisfied, the W timer will begin timing to transfer to Source 2.

Under Voltage "Fail"
Factory Default: 80%
This adjustment determines the low voltage threshold.
Adjust via the SET menu. Range is 75% to 98% in 1% increments (see page 17).
"Fail" must be a minimum of 2 % below "Restore" setting. Once voltage falls below threshold, T timer will be bypassed to expedite the transfer to Source 1.

Over Voltage "Fail"
Factory Default: 110%
This adjustment determines the maximum acceptable Over Voltage. Adjust via the SET menu. Range is 105% to 110% in 1% increments (see page 17). Once exceeded, the T timer will be bypassed to expedite the transfer to Source 1.

Over Voltage "Restore"
Factory Default: 105%
This adjustment determines the minimum acceptable Over Voltage threshold at which the transfer switch is allowed to transfer to Source 2. Adjust via the SET menu. Range is 103% to 105% in 1% increments (see page 17). "Restore" must be a minimum of 2% below "Fail" setting.

Under Frequency "Restore"
Factory Default: 95%
This adjustment determines the minimum acceptable frequency required to transfer to Source 2.
Adjust via the SET menu. Range is 90% to 100% in 1% increments (see page 17).
Once satisfied, the W timer will begin timing to transfer to Source 2.

Under Frequency "Fail"
Factory Default: 90%
This adjustment determines the low frequency threshold.
Adjust via the SET menu. Range is 88% to 98% in 1% increments (see page 17).
"Fail" must be a minimum of 2 % below "Restore" setting. Once satisfied, the W timer will begin timing to transfer to Source 2.

Over Frequency "Fail"
Factory Default: 105%
This adjustment determines the maximum acceptable Over Frequency. Adjust via the SET menu. Range is 103% to 105% in 1% increments (see page 17). Once exceeded, the T timer will be bypassed to expedite the transfer to Source 1.

Over Frequency "Restore"
Factory Default: 102%
This adjustment determines the minimum acceptable Over Frequency threshold at which the transfer switch is allowed to re-transfer to Source 2. Adjust via the SET menu. Range is 102% to 104% in 1% increments (see page 17). "Restore" must be a minimum of 1% below "Fail" setting.

Katolight Service - Master Repair Manual - Page 4546

Accessory Group Packages

Table 3

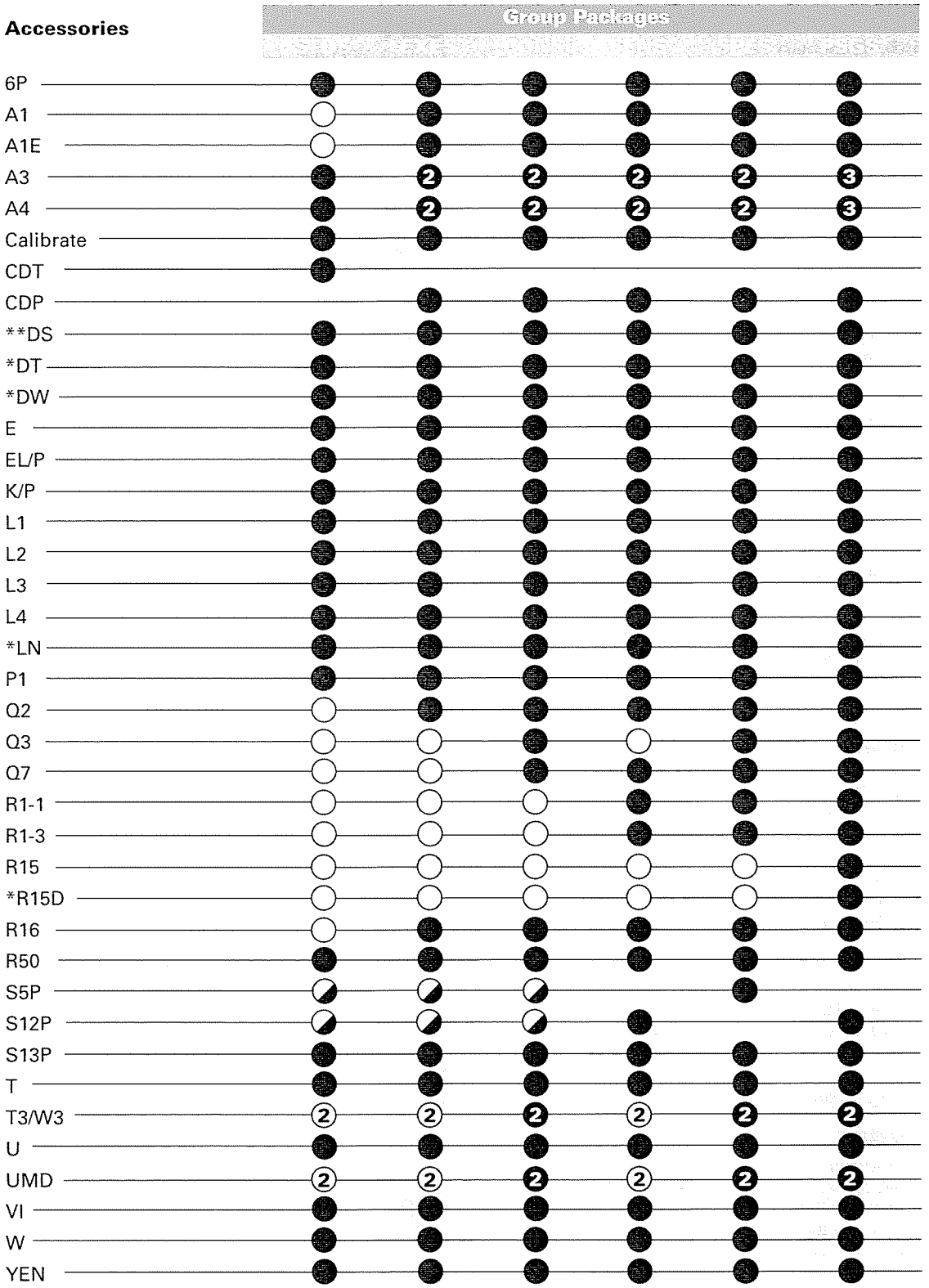

● Standard Accessory included in the group package.
○ Optional Accessory not included but can be added to group package.
◪ Optional Accessory. Can not be used with accessory having the same symbol.
— N/A
②❷ Denotes an Accessory with 2 circuits as a standard.
❸ Denotes an Accessory with 3 circuits as a standard.

* Delayed Transition Units Only.
** Optional for 40-400 Amp

Katolight Service - Master Repair Manual - Page 4547

Accessory Definitions

6P
Test Switch, Momentary

6A
Test Switch, Maintained Auto/Momentary Test

6AP
Test Switch, Maintained/Momentary utilizing keypad

6B
Test Switch, Maintained - Auto / Momentary - Test, Key Operated

6C
Test Switch, Maintained - Auto / Maintained - Test, Key Operated

A1
Auxiliary Contact, operates on Source 1 line failure.

A1E
Auxiliary Contact, operates on Source 2 line failure.

A3
Auxiliary Contact: Closed in emergency (Source 2) Additional Available (10 max.) and need to be specified.

A4
Auxiliary Contact: Closed in normal (Source 1) Additional Available (10 max.) and need to be specified.

A62
Sequential Universal Motor Load Disconnect Circuit. Normally closed auxiliary contacts for motor loads. Open 0-60 seconds prior to transfer, after transfer, or both in either direction then re-close in timed sequence after transfer.

AB3
Auxiliary Contact: Closed in bypass emergency (Source 2) (S.P.D.T.) (Standard up to 400 Amp) Additional Available (10 max.) and need to be specified.

AB4
Auxiliary Contact: Closed in bypass normal (Source 1) (S.P.D.T.) (Standard up to 400 Amp) Additional Available (10 max.) and need to be specified.

B9
Battery charger connections.

Calibrate
While monitoring the actual Phase to Phase voltage levels and Frequency with a calibrated test equipment, the Phase to Phase voltage sensing and Frequency can be adjusted accordingly. Calibration capabilities are available for Frequency and AB, BC, CA Phase to Phase voltage for both Sources. Adjust via SET menu (see page 18)

CDP
Clock Exerciser Load/ No Load: Allows the Generator to start and run unloaded or to simulate a power failure, start Generator and run under load. Can be configured by end user for 1, 7, 14, 28, 365 day cycle. (See page 16)

CDT
Load or NO-Load. One event exerciser with adjustable Engine exercise timer. Exercise duration can be set between 5 and 60 minutes in 1 minute increments. Can be configured to run every 1, 7, 14, or 28 days. Factory Default is 20minutes. When exerciser is impending, (*E*) appears in the upper right hand corner of LCD screen. See page 15 for instructions. Configured via CFG (see page 17). Set via SET menu (see page 18).

CTAP
Alarm Panel on transfer to Source 2 with Silence button.

DS
Disconnect Switch, Auto/Inhibit.
Inhibits transfer in either direction when in inhibit.
Allows automatic operation when in Auto.
(40-400 Amps optional, 600-4000 Amps standard)

DT *(Delayed Transition Only)*
Time Delay from Neutral Switch position to Source 1 position. Adjustable 0-10 minutes in 1 second increments. Standard setting is 5 seconds Adjust via SET menu (see page 18)

DW *(Delayed Transition Only)*
Time Delay from Neutral Switch position to Source 2 position. Adjustable 0-10 minutes in 1 second increments. Standard setting is 5 seconds.Adjust via SET menu (see page 18)

E
Engine Start Contact

EL/P
Event Log: Sequentially Numbered Log of 16 events that track date, time, reason and action taken
System Data: Total Life Transfers (N2P)
Days Powered Up
Total Transfers to S2
Total S1 Failures
Time S1 available in Hrs
Time S2 available in Hrs. (N1P)

F
Fan contact, operates when generator is running.

HT
Heater and Thermostat

K
Frequency Meter, Door mount.

K/P
Frequency Indication for S1 and S2

L
LNP Center-off position LCD-Indicator
Indicating LED lights:
- **L1** Indicates Switch in Source 2 position.
- **L2** Indicates Switch in Source 1 position.
- **L3** Indicates Source 1 available.
- **L4** Indicates Source 2 available.

Katolight Service - Master Repair Manual - Page 4548

Accessory Definitions (cont'd)

M1
Single Phase Amp Meter

M2
Three Phase Amp Meter

M80
3000 Digital Power Monitor

M82
5200 Digital Power Meter

M83A
EPM 5300 Digital Power Meter with Modbus Port

M83B
EPM 5350 Digital Power Meter with Ethernet Port

M84
7430 Digital Power Meter , Wye or Delta

M85A
EPM 9450 Digital Power Meter, Ethernet

M85B
EPM 9450 Digital Power Meter with Internal 56K Mod.

M86A
EPM 9650 Digital Power Meter, Wye or Delta, RS232 or RS485

M86B
EPM 9650 Digital Power Meter, Wye or Delta, RS232 or RS485

N1
Running Time Meter, Door mount

N2
Operation Counter, Door Mount

P1
Time Delay Source 2 Start. Adjustable 0-10 seconds. Standard setting is 3 seconds.
Adjust via SET menu (see page 18)

P2
Time Delay S2 Start. Adjustable 1/6 to 300 seconds.

Q2
Remote Peak Shave or Area Protection Circuit. Energize Q2 to simulate Source 1 Line failure causing the Generator to start and transfer the load to Source 2. Should Emergency fail during this operation, Transfer Switch will retransfer back to Source 1.

Q3
Remote inhibit transfer to Source 2 circuit. Energize Q3 input to allow transfer to Source 2. To enable Q3 option, engage Q3 jumper.

Q7
Inhibit transfer to Source 1 circuit. Energize Q7 input to prevent transfer to Source 1.

R1-1/R1-3
Source 1 Over Voltage sensing for single and three phase systems.
Source 1 Over Voltage "Fail"
Factory Default: 110%
This adjustment determines the maximum acceptable over voltage. Adjust via the SET menu. Range is 105% to 110% in 1% increments (see page 18).
Once exceeded, the P timer begins timing to signal the Generator to start.

Source 1 Over Voltage "Restore"
Factory Default: 105%
This adjustment determines the minimum acceptable over Voltage threshold at which the Transfer Switch is allowed to automatically transfer to Source 1. Adjust via SET menu. Range is 103% to 108% in 1% increments. "Restore" must be a minimum of 2% below "Fail" setting (see page 18).

R15/R15D
Load Shed
Should Source 2 become overloaded, a signal can be given to switch to the dead or Mid position.

R16
Phase Rotation Sensing
Can be turned on or off via CFG menu (see page 17).
Factory Default is on.
This feature prevents Line Source to Line Source transfers from occurring between dissimilar phase sequences. This condition is primarily caused by an installation error. Connections from Source 1 and Source 2 need be verified, compared, and corrected to remedy the inconsistent phase rotation between the sources.
WARNING: Turning off this feature can cause severe damage to loads.

R26
Interruptable Power Rate Provisions.
Allow transfer out of Source 1 position to Source 2 or dead Source 2. Alarm and Pre-Signal circuit included.

Katolight Service - Master Repair Manual - Page 4549

R50

In Phase Monitor this feature restricts **Live to Live Source Transfers** to occur unless both Sources are within 7 electrical degrees or less of each other. (live Source to live Source transfers usually occur during transfer back to Source 1 or during Testing). R50 does not change the operation of the Automatic Transfer Switch in a power failure mode. After all timer functions have elapsed, **the CHECKING FOR SOURCE SYNCHRONISM** will be displayed as well as the direction of transfer (S1-S2 for example denotes transfer from Source 1 to Source2). When synchronism is accomplished, transfer will take place.

Notes:
- **If S2 Frequency is less than S1 Frequency, display will show a series of (-----.....) symbols.**
- **If S2 Frequency is greater than S1 Frequency, display will show a series of (+++++.....) symbols.**
- **Each (-) or (+) symbol represents 10 electrical degrees out of phase. A maximum of 18 symbols (180 electrical degrees) can be monitored.**
- **The number of (-) or (+) symbols decrease as the two sources approach synchronism and increase as the two sources drift out of synchronism.**
- **If S1 and S2 Frequencies are identical, the display will show a series of alternating symbols (+-+-+...) which also indicate the approximate out of phase degrees**

In the event that the Sources do not come within 7 electrical degrees of each other within 60 seconds, the unit will display the message: **SYNCH CHECKING** and will allow the user to **BYPASS**. If the **BYPASS** button is pressed, the unit will display the message: **WARNING MAY CAUSE DAMAGE TO THE LOAD**. Pressing **XFR** will actually bypass the R50. Since R50 is a passive device, the length of time it takes to reach Synchronism is dependent on the frequency difference between the two Sources. Source 1 is usually a Utility and the frequency is not within the control of the consumer. Source 2 needs to be adjusted to create an adequate difference in order for the transfer to happen a timely fashion.

Note: For optimum performance, Source 2 Generator should be adjusted a Maximum of 2 Hertz above or below the Utility frequency, minimum of 0.1 Hertz. (58 to 59.9) or (60.1 to 62) Hertz. Adjustment of Generator to 60Hertz could cause lengthy transfer delay.

R50 Feature can be turned ON or OFF via CFG Menu (see page 17). Factory Default if OFF.

S5P

Auto / Semi Manual selector
In "Auto" position, retransfer to Source 1 is automatic after the T timer has timed out. The T time delay is bypassed if Source 2 fails.
In "Manual", retransfer to Source 1 is upon depression of BYPASS DELAY button YEN or if Source 2 fails.

S12P

Auto / Manual Selector
In "Auto" position, the Automatic Transfer Switch functions automatically as specified with the Switch drawings.
In "Manual" the Automatic Transfer Switch will transfer to either direction upon depression of Source 1 or Source 2 transfer buttons.
Should Source 1 fail, the Generator (Source 2), will automatically start. Once transferred in Manual, the Switch maintains position selected even if selected power fails.

S13P

Transfer Commit. Configured via CFG menu.
(see page 17) When this Feature is set to OFF:
The transfer Switch is not committed to transfer unless the outage duration is longer than the timers that precede the transfer to Source 2 position. This assumes that the outage will be an isolated event. When this Feature is set to ON: The transfer Switch is committed to transfer to Source 2 position once the W timer has begun timing, even if Source 1 power returns before the transfer to Source 2. This is to ensure that the transfer takes place, because one outage may be followed by another.

S14

Test / Auto / Source 1 Selector, Door mount

SW1

Auto/Off/Start Engine control selector, Door mount
(Keyed or non-keyed operation available)

SW2

Auto / Off Engine control selector, Door mount
(Keyed or non-keyed operation available)

SW3

Source Priority Selector Switch, Door mount
Allows selection of Source 1 or Source 2 to be the Prime Source. Transfer Switch will transfer to selected Prime Source if that Source is available. (Keyed or non-keyed operation available)

T

Time Delay (S1) Source 1 Stable Timer. To delay transfer to Source 1 (immediate retransfer on Source 2 failure). Adjustable 0-60 minutes in 1 second increments. Standard setting is 30 minutes. Adjust via SET menu (see page 18)

T3/W3

Elevator Pre-Signal Auxiliary Contacts: Open 0-60 seconds prior to transfer to either direction, re-closes after transfer.

U

(S2) Source 2 Stop Delay Timer. Allows Engine to run unloaded after switch retransfer to Source 1. Adjustable 0-60 minutes in 1 second increments. Standard setting is 5 minutes. Adjust via SET menu (see page 18)

Katolight Service - Master Repair Manual - Page 4550

Accessory Definitions (cont'd)

UMD
Universal Motor Load Disconnect Circuit: Auxiliary Contact opens 0-60 seconds prior to transfer in either direction, re-closes after transfer. Can be configured by end user for Pre-transfer, Post-transfer, or both.

VI
Voltage Imbalance (Three Phase)
For a three phase source, this feature monitors phase voltage ratios based on a selected range within a selected time window. Should any phase fall below the selected lower window limit or exceed the selected higher window limit within the selected time frame, the controller initiates transfer to the other source.

Range: 5% to 20% of Nominal voltage,
10 to 30 seconds window, user adjustable.
Resolution: 1% Increments
Minimum Differential: 2% between "Fail" and "Restore" settings.
Factory default: 10% "Fail", 8% "Restore", 30 Seconds.
See CFG Menu page 17 to configure ON or OFF.
See SET Menu page 18 to set Percentage and time windows

W
Time Delay (S2) Source 2 Stable Timer. To delay transfer to Source 2. Adjustable 0-5 minutes in 1 second increments. Standard setting is 1 second. Adjust via SET menu (see page 18)

YEN
Bypass Timers Key utilizing Keypad. When applicable, the system prompts the user to press a button to bypass (T) or (W) Timers should the user so desires.

ZNET
Network Communications Interface Card

How to Set the System Clock

How to Set the System Clock

Set System Clock, time and date

- If the clock is not set, the display will show SET SYSTEM CLOCK on the second line of the S1 OK screen.
- The S1 OK screen will show time (hours and minutes) on the second line if the system clock has been set. (Date on third line)

Setting the System Clock

(Start from **S1 OK** screen)

1. Remove battery protective white plastic strip near **P** relay. *
2. Press **MORE** then press **SET**.
3. Press **MORE** and scroll to **SET SYSTEM CLOCK** using the **MORE** key.
4. Press **SEL**.
5. **ENTER ACCESS CODE** located on the white label on the back of the controller.
6. Press **SEL**.
7. Use the up and down keys to change the hour value.
8. Press **SAVE** (this will enter this value and move cursor to minutes).
9. Use the up and down keys to change the minutes.
10. Press **SAVE** (this will enter this value and move cursor to month).
11. Use the up and down key up to change the month.
12. Press **SAVE** (This will enter this value and complete the clock setting).
13. Use the up and down keys to change the date.
14. Press **SAVE** (this will enter this value and move cursor to year).
15. Use the up and down keys to change year.
16. Press **SAVE** (this will enter this value and compete the clock setting).
17. To edit settings, press **SEL** and repeat steps 6-16.
18. If the setting is satisfactory, press **MORE** (unit then returns to the **SET** menu then press **BACK**, then **ESC**.)

* Replacement battery part #K-4100
Battery will last 5 years and provides power to retain clock function only (Controller functions without battery).

Katolight Service - Master Repair Manual - Page 4551

CDT One Event Timer Exerciser

Load or No-Load

One event Exerciser with adjustable Timer. Exercise duration can be set between 5 and 60 minutes in 1 minute increments. Can be configured to run every 1,7,14, or 28 days. Factory default is 20 minutes.

How to CONFIGURE (CFG) and Set (SET) the Timer Exerciser

1. Beginning from the **S1 OK** screen, press **MORE** then **CFG**.
2. Press **MORE** to scroll to **CONFIG TIMER EXERCISER** screen.
3. The third line of the **CONFG TIMER EXERCISER** will show either **DAILY**, **WEEKLY**, **14 DAY**, **28 DAY**, or **OFF**.
4. If the third line of the **CONFG TIMER EXERCISER** shows **DAILY**, **WEEKLY**, **14 DAY**, or **28 DAY** as desired, then proceed to step 10.
5. If the third line of the **CONFG TIMER EXERCISER** shows **OFF** or if another timer selection is desired, continue.
6. Press **SEL**.
7. Enter **ACCESS** code located on white label on the back of the controller.
8. Press **UP** or **DOWN** to select **DAILY**, **WEEKLY**, **14 DAY**, or **28 DAY** as desired.
9. Press **SAVE**.
10. Press **MORE** to scroll to **CONFG TIMER EXERCISER (XFR)** or **(NO XFR)**.
11. Press Up or Down to select **XFR** (Load Transfer) or **NO XFR** (No Load Transfer).
12. Press **SAVE**.
13. Press **MORE** repeatedly to **BACK** then **S1 OK** screen.

Set (SET) the Exerciser:

14. Beginning from the **S1 OK** screen, press **MORE** then **SET**.
15. Press **MORE** repeatedly until **EXER S2 RUN TIME** screen.
16. Press **SEL**
17. Enter **ACCESS** code located on white label on the back of the controller.
18. Press **SEL**
19. Cursor is indicated as a line under character to be changed. Change values with up and down keys.
20. Press **SAVE** when complete.
21. Press **MORE** repeatedly until **SET USER SETUP** then press **BACK** then **ESC** to the **S1 OK** screen.

How to Initiate CDT Exerciser and to start an exercise cycle every 1, 7, 14, or 28 days

From S1 screen

1) Press **TEST**
2) Press **MORE**
3) Press **START TEST TIMER** (to initiate Test).

- If the CDT Exerciser is Factory configured for a Load Exerciser, the Controller will immediately start a load exercise. The controller will start the generator, transfer the load to Source 2 and remain in Source 2 for the duration set for **EXER S2 RUN TIME** in the **SET** menu. The controller will retransfer the load back to Source 1 after the S1 stable timer has timed out and run the generator unloaded for the duration of the S2 stop delay timer (Engine Cool Down Timer).
- If the CDT Exerciser is Factory configured for a No-Load Exerciser, the Controller will immediately start a No-load exercise. The controller will start the generator and run it unloaded for the duration of the S2 stop delay timer (Engine Cool Down Timer).

Exercise will be repeated at the same time as initiated on every 1, 7, 14, or 28 days according to the selection made in the Configure **CFG** menu.

How to Bypass (Cancel) an exercise during an exercise cycle

1) Press **BPASS**
2) Allow the controller to complete the Engine cool down cycle

If the CDT Exerciser is Factory configured for a No-Load Exerciser Or allow the controller to complete retransfer to Source 1 If the CDT Exerciser is Factory configured for a Load Exerciser

How to Bypass the next exercise event and Keep the rest of scheduled events unchanged

1) Press Test
2) Press **MORE**
3) Press **BYPASS EXER**

To re-institute the next exercise event back, press **CANCL BPASS**

How to initiate a new exercise start time

1) Press **TEST**
2) Press **MORE**
3) Press **EXER CANCL**
4) Press **START TIMER TEST**

How to check the next exercise event

1) From **S1 OK** screen, press **MORE** three times.
2) The unit will display the **PLANT EXERCISER NEXT** event in **DAYS**, **HOURS**, and **MINUTES**
3) Press **ESC** to **S1 OK** Screen.

Notes:

- ***E*** appears in the upper right hand corner of LCD screen when exercise is impending.
- For Load Exerciser, actual exercise period (ATS in S2 position)= CDT (Exerciser) timing period +T (S1 stable Timer) timing period.

Katolight Service - Master Repair Manual - Page 4552

Load / No-Load Clock Exerciser

Allows the Generator to start and run unloaded or to simulate a power failure, start Generator and run under load. Can be configured by the end user for 1, 7, 14, 28, or 365 day cycles.

- A total of 7 independent No Load exercise periods (up to 10 hours each) can be programmed for each of the daily, weekly, 14-day, and 28-day exercisers.
- A total of 12 independent No Load exercise periods (up to 10 hours) can be programmed for the 365-day Exerciser.

How to Configure (CFG) the Exerciser

1. Beginning from the **S1 OK** screen, press **MORE** then **CFG**.
2. Press **MORE** to scroll to **CONFIG CLOCK EXERCISER** screen.
3. The third line of the **CONFG CLOCK EXERCISER** will show either **DAILY, WEEKLY, 14 DAY, 28 DAY, 365 DAY** or **OFF**.
4. If the third line of the **CONFG CLOCK EXERCISER** shows **DAILY, WEEKLY, 14 DAY, 28 DAY**, or **365 DAY** as desired, press **MORE** repeatedly to **BACK**. Press **ESC** then proceed to the **SET** menu to set the **EXERCISER**.
5. If the third line of the **CONFG CLOCK EXERCISER** shows **OFF**, continue.
6. Press **SEL**.
7. Enter **ACCESS** code located on white label on the back of the controller.
8. Press **UP** or **DOWN** to select **DAILY, WEEKLY, 14 DAY, 28 DAY**, or **365 DAY** as desired.
9. Press **SAVE**.
10. Press **MORE** repeatedly to **BACK** then **ESC** to **S1 OK** screen.

How to set (SET) the DAILY Exerciser

1. Beginning from the **S1 OK** screen, press **MORE** then **SET**.
2. Press **MORE** repeatedly until **SET EXERCISER** screen.
3. Press **SEL**.
4. Enter **ACCESS** code located on white label on the back of the controller.
5. Press **SEL**
6. Cursor is indicated as a line under character to be changed. Change values with up and down keys. Press **SAVE** after each entry to save value and to move to the next value to be changed.
7. Press **BACK** when complete.
8. Press **MORE** repeatedly until **SET USER SETUP**. Press **BACK** then **ESC** to the **S1 OK** screen.

How to Bypass (Cancel) an exercise during an exercise cycle

1) Press **BPASS**
2) Allow the controller to complete the Engine cool down cycle.

If the CD Exerciser is configured or Set for a No-Load Exercise. Or allow the controller to complete retransfer to Source 1. If the CD Exerciser is configured for a Load Exerciser

How to Bypass the next exercise event and Keep the rest of scheduled events unchanged

1) Press **TEST**
2) Press **MORE**
3) Press **BYPASS EXER**

To re-institute the next exercise event back, press **CANCL BPASS**

How to check the next exercise event

1) From **S1 OK** screen, press **MORE** three times.
2) The unit will display the **PLANT EXERCISER NEXT** event in **DAYS, HOURS**, and **MINUTES**
3) Press **ESC** to **S1 OK** Screen.

Notes:

- In the **S1 OK** screen, an (*E*) appears in the upper right hand corner of LCD screen when exercise is impending.
- For Load Exerciser, actual exercise period (ATS in S2 position)= **CDT** (Exerciser) timing period +T (S1 Stable Timer) timing period.
- A value greater than zero must be entered in the Exerciser duration field to be accepted as a valid exercise period.
- The Exercise cycle will be repeated on a regular basis as programmed and initiated in the **SET** menu depending on what Exerciser was configured (selected) in the **CFG** menu.

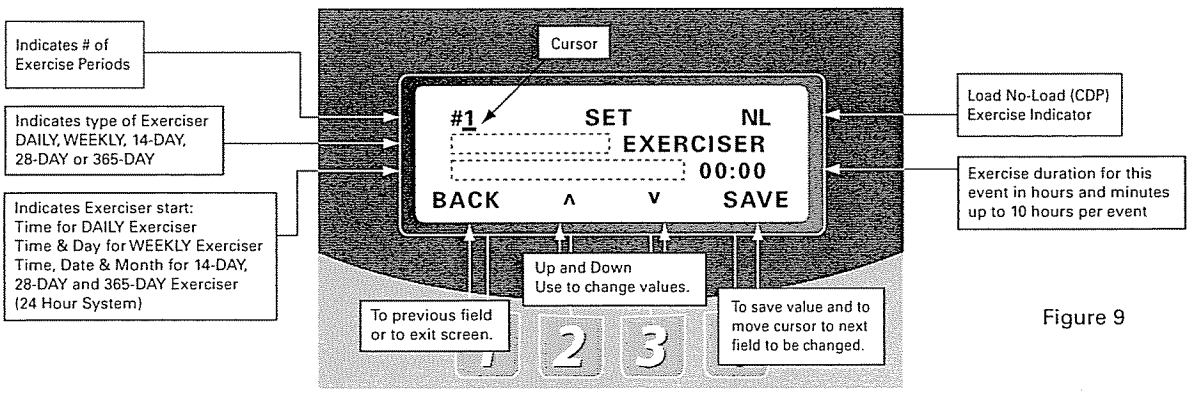

Figure 9

Katolight Service - Master Repair Manual - Page 4553

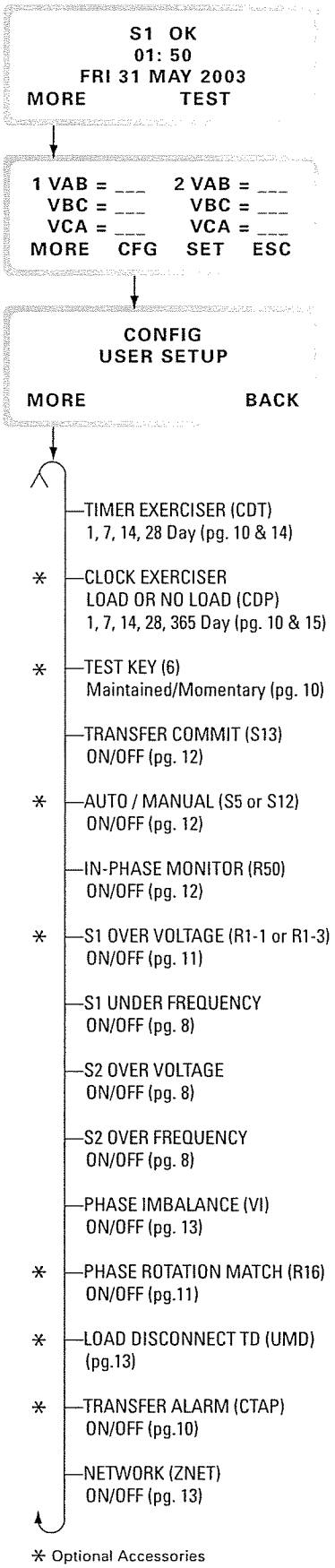

Turn options ON or OFF via keypad through the CFG menu

Enter six digit access code
(The factory assigned six-digit access code is located on the back of the controller)

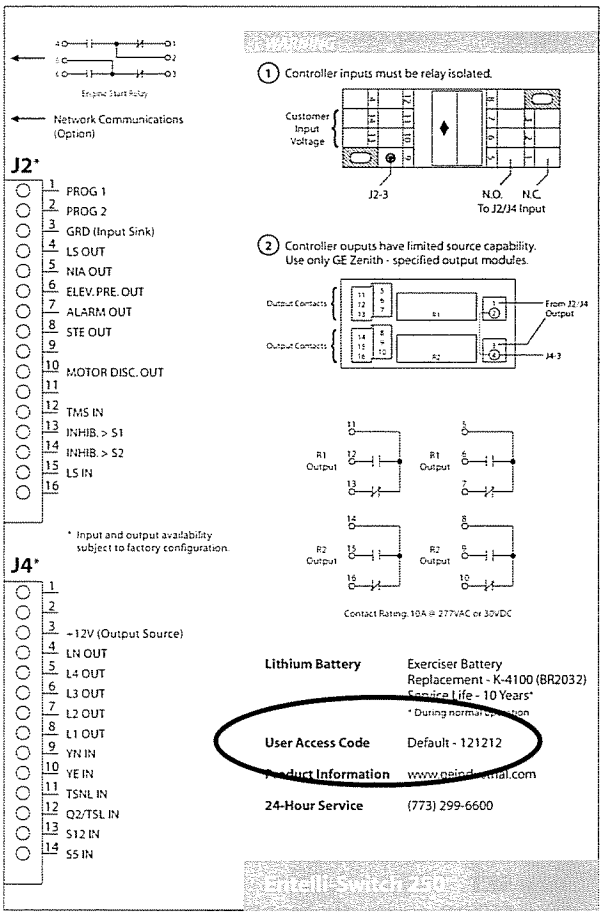

Figure 10

Katolight Service - Master Repair Manual - Page 4554

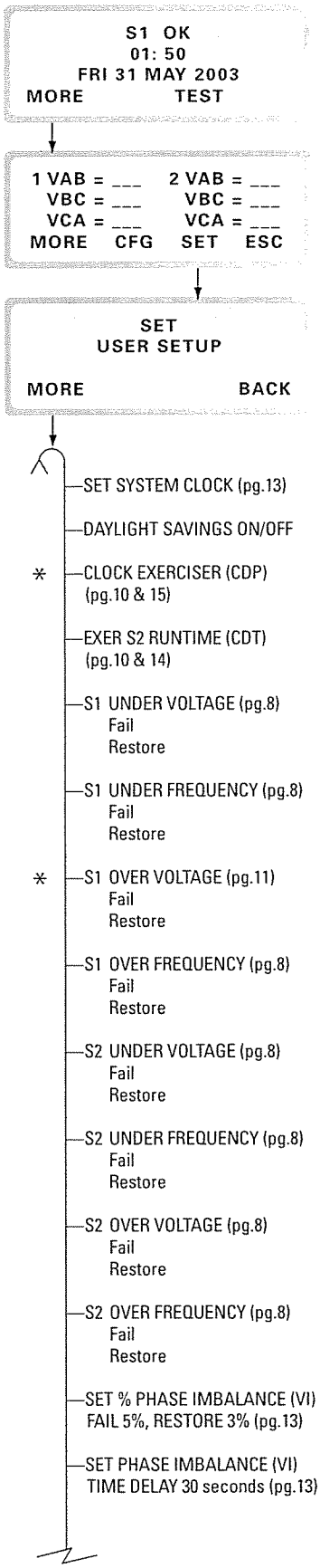

Change adjustable values through the SET menu.

Enter six digit access code
(The factory assigned six-digit access code is located on the back of the controller)

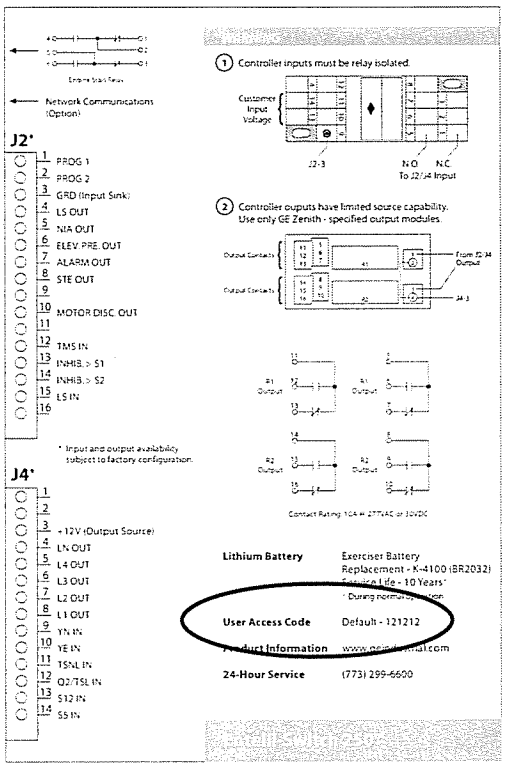

Figure 10

Katolight Service - Master Repair Manual - Page 4555

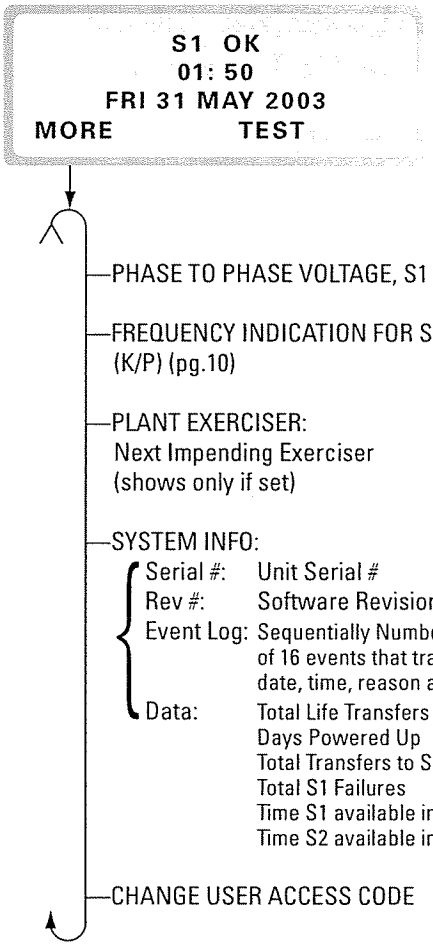

View System Data

Enter six digit access code
(The factory assigned six-digit access code is located on the back of the controller)

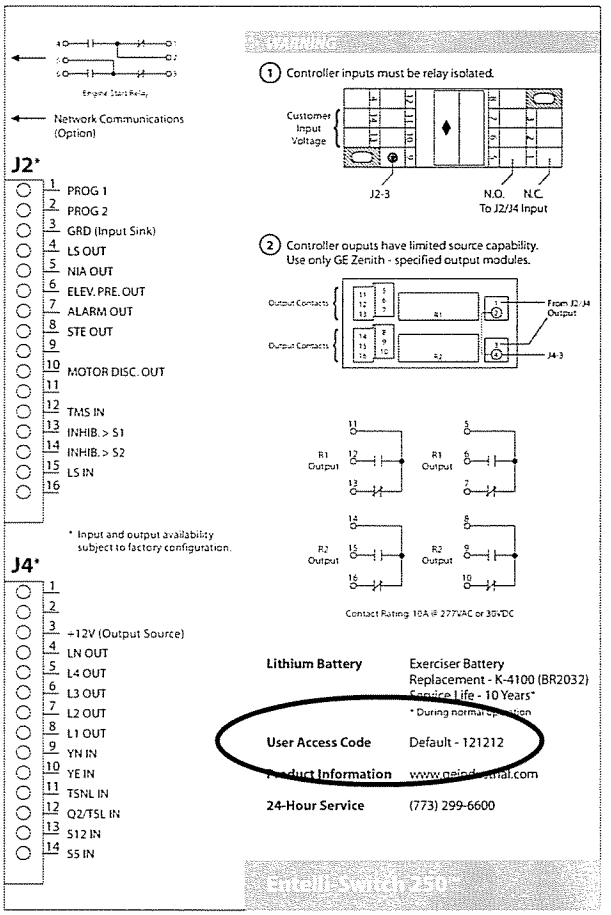

Figure 10

Katolight Service - Master Repair Manual - Page 4556

⚠ NOTICE ⚠

A periodic test of the transfer switch under load conditions is recommended to insure proper operation. (See National Electric Code articles 700 and 701)

ATS Testing

Start generator and verify proper voltage, frequency and phase sequence (match to Source 1). Shut down gen set and place in Auto. Complete the visual inspection of the transfer switch, and close the cabinet door.

Initiate the test by pressing the TEST button on the LCD keypad. The controller will then prompt for your access code. After entering the code, three test options will appear—XFR LOAD, FAST TEST and NO XFR (See Figure 11).

- **XFR LOAD** test starts the generator and using the current timer settings, transfers the load to Source 2.
- **FAST TEST** test presets timer values to a maximum 30 seconds during the test. After completion of the test, all timers are reset to their original values. (T3, W3, DT and DW remain)
- **NO XFR** test starts the generator but does not transfer the load to the Source 2.

Press and hold the desired test option button until the switch transfers to Source 2 (load test) or until the generator has been run for the desired amount of time (no load test). Releasing the test button before W timer timeout will abort the test (Exception: when the transfer commit option, is configured "ON").

To test lamps, press TEST then scroll through MORE, then press LAMP TEST. To cancel LAMP TEST press MORE.

Standard Transition

When the test is initiated, the controller initiates the Time Delay Source 2 Start Timer (Engine Start Timer "P") cycle. A manual CANCEL button is provided to cancel the test if desired. Upon completion of the (P) time delay, an Engine start Signal is sent to Source 2. When Source 2 voltage and frequency reach the preset "Restore" Values, the time delay to Source 2 Timer (W) begins its timing cycle to ensure voltage and frequency stabilization before transfer. A manual pushbutton BYPASS is provided to bypass the "W" time delay if desired. After the (W) time delay, the CCE relay energizes the CE solenoid to close the transfer switch in to Source 2. The SE limit switch activates to de-energize the CCE relay.

Restoration of Source 1 Power:

Deactivating the test switch initiates re-transfer to Source 1 sequence.The delay to Source 1 Timer (T) begins its timing cycle to ensure voltage and frequency stabilization before retransfer. A manual pushbutton BYPASS is provided to bypass the "T" time delay if desired. After the (T) time delay, the CCN relay energizes the CN solenoid to retransfer the switch to Source 1. The SN limit switch activates to de-energize the CCN relay.

Immediately after re-transfer, the S2 Stop Delay Timer (Delay to Engine Stop "U") begins its cycle to allow Source 2 Engine to run unloaded. A manual pushbutton BYPASS is provided to bypass the "U" time delay if desired. Upon completion of the (U) timing cycle, the controller sends an Engine stop signal.

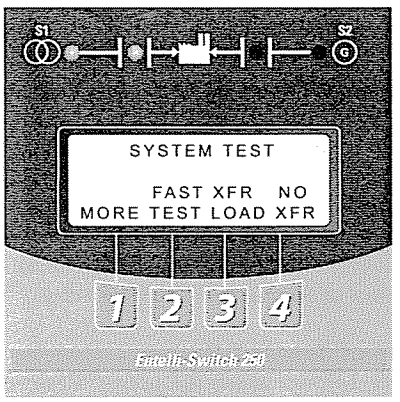

Figure 11

Delayed Transition

Source 1 Power Failure:

When the test is initiated, the controller initiates the Time Delay Source 2 Start (Engine Start Timer "P") cycle. A manual CANCEL button is provided to cancel the test if desired Upon completion of the (P) time delay, an Engine start Signal is sent to Source 2. When Source 2 voltage and frequency reach the preset "Restore" values, the time delay to open Source 1 timer (W) begins its timing cycle to ensure voltage and frequency stabilization before re-transfer. A manual pushbutton BYPASS is provided to bypass the "W" time delay if desired. After the (W) time delay, the CCNO relay energizes the CNO solenoid to open the transfer switch out of Source 1 position. The time delay to Source 2 timer (DW) begins its timing cycle. After the (DW) time delay, the CCE relay energizes. The switch then completes transfer to Source 2 by energizing the CE solenoid. The SE limit switch activates to de-energize the CCE relay.

Restoration of Source 1 Power:

Deactivating the test switch initiates re-transfer to Source 1sequence.The delay to open Source 2 Timer (T) begins its timing cycle to ensure voltage and frequency stabilization before retransfer. A manual pushbutton BYPASS is provided to bypass the "T" time delay if desired. After the (T) time delay, the CCEO relay energizes the CEO solenoid to open the switch out of Source 2 position. The time delay to Source 1 timer (DT) begins its timing cycle. After the (DT) time delay, the CCN relay energizes the CN solenoid to complete re-transfer of the switch to Source 1. The SN limit switch activates to de-energize the CCN relay.

Immediately after re-transfer, the S2 Stop Delay Timer (Delay to Engine Stop "U") begins its cycle to allow Source 2 Engine to run unloaded. A manual pushbutton BYPASS is provided to bypass the "U" time delay if desired. Upon completion of the (U) timing cycle, the controller sends an Engine stop signal.

Katolight Service - Master Repair Manual - Page 4557

Sequence of Operation

Standard Transition

Source 1 Power Failure:
When Source 1 voltage or frequency has fallen below the preset "Fail" values, the controller initiates the Time Delay Source 2 Start Timer (Engine Start Timer "P") cycle. Upon completion of the (P) time delay, an Engine start Signal is sent to Source 2. When Source 2 voltage and frequency reach the preset "Restore" Values, the time delay to Source 2 Timer (W) begins its timing cycle to ensure voltage and frequency stabilization before transfer. A manual pushbutton BYPASS is provided to bypass the "W" time delay if desired. After the (W) time delay, the CCE relay energizes the CE solenoid to close the transfer switch in to Source 2. The SE limit switch activates to de-energize the CCE relay.

Restoration of Source 1 Power:
When Source 1 power reach the preset "Restore" values, the controller initiates re-transfer to Source 1sequence.The delay to Source 1 Timer (T) begins its timing cycle to ensure voltage and frequency stabilization before retransfer. A manual pushbutton BYPASS is provided to bypass the "T" time delay if desired. After the (T) time delay, the CCN relay energizes the CN solenoid to retransfer the switch to Source 1. The SN limit switch activates to de-energize the CCN relay.

Immediately after re-transfer, the S2 Stop Delay Timer (Delay to Engine Stop "U") begins its cycle to allow Source 2 Engine to run unloaded. A manual pushbutton BYPASS is provided to bypass the "U" time delay if desired. Upon completion of the (U) timing cycle, the controller sends an Engine stop signal.

Delayed Transition

Source 1 Power Failure:
When Source 1 voltage or frequency has fallen below the preset "Fail" values, the controller initiates the Time Delay Source 2 Start (Engine Start Timer "P") cycle. Upon completion of the (P) time delay, an Engine start Signal is sent to Source 2. When Source 2 voltage and frequency reach the preset "Restore" values, the time delay to open Source 1 timer (W) begins its timing cycle to ensure voltage and frequency stabilization before re-transfer. A manual pushbutton BYPASS is provided to bypass the "W" time delay if desired. After the (W) time delay, the CCNO relay energizes the CNO solenoid to open the transfer switch out of Source 1 position. The time delay to Source 2 timer (DW) begins its timing cycle. After the (DW) time delay, the CCE relay energizes. The switch then completes transfer to Source 2 by energizing the CE solenoid. The SE limit switch activates to de-energize the CCE relay.

Restoration of Source 1 Power:
When Source 1 power reach the preset "Restore" values, the controller initiates re-transfer to Source 1 sequence.The delay to open Source 2 Timer (T) begins its timing cycle to ensure voltage and frequency stabilization before retransfer. A manual pushbutton BYPASS is provided to bypass the "T" time delay if desired. After the (T) time delay, the CCEO relay energizes the CEO solenoid to open the switch out of Source 2 position. The time delay to Source 1 timer (DT) begins its timing cycle. After the (DT) time delay, the CCN relay energizes the CN solenoid to complete re-transfer of the switch to Source 1. The SN limit switch activates to de-energize the CCN relay.

Immediately after re-transfer, the S2 Stop Delay Timer (Delay to Engine Stop "U") begins its cycle to allow Source 2 Engine to run unloaded. A manual pushbutton BYPASS is provided to bypass the "U" time delay if desired. Upon completion of the (U) timing cycle, the controller sends an Engine stop signal.

Table 4

Timer Designations as they appear in the SET menu						
ATS Type	**P**	**W**	**DW**	**T**	**DT**	**U**
Standard Transition	Time Delay S2 Start	Time Delay S2 Stable	→	Time Delay S1 Stable	→	S2 Stop Delay
Delayed Transition	Time Delay S2 Start	Time Delay S2 Stable	ATS Open Time to S2	Time Delay S1 Stable	ATS Open Time to S1	S2 Stop Delay
Source 1 Fails	Transfer to Source 2 →			Source 1 Returns ↓	Transfer to Source 1 →	Engine Cooldown

Katolight Service - Master Repair Manual - Page 4558

Standard Transition

Each Entelli-Switch 250 microprocessor based ATS controller requires a relay/transformer box to apply line voltage to the ATS operator via coil control relays. Also required is power for the Entelli-Switch 250 printed circuit board and an application of sensing voltage proportional to line voltage. This is accomplished by the relay transformer box. This method of switching operator voltage and applying power and sensing voltage to the printed circuit board isolates the MX250 from the line voltage, further protecting the controller from harmful line transients. Two versions of the R/T box exist depending on the type of ATS (standard transition or delayed transition).

The following layout drawings of the R/T Box components (standard and delayed transition) include a bill of materials for replacement parts. Schematics are included to indicate proper wiring.

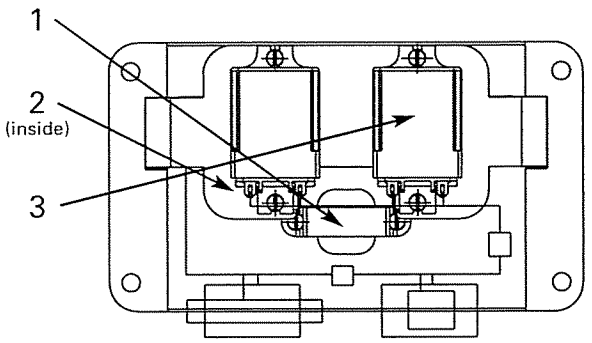

Figure 12

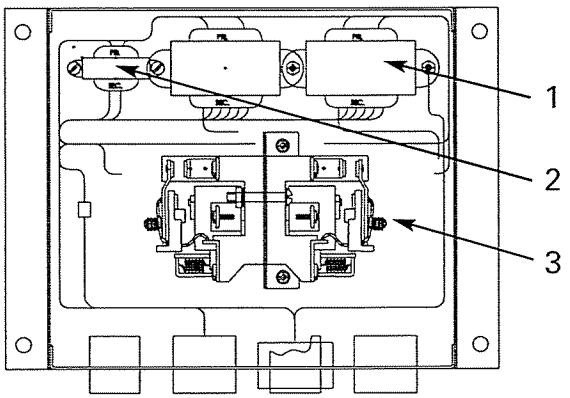

Figure 13

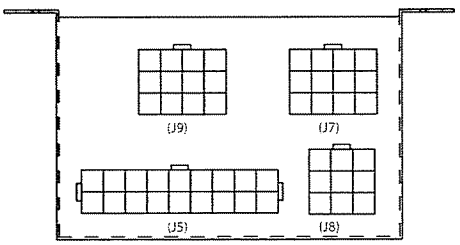

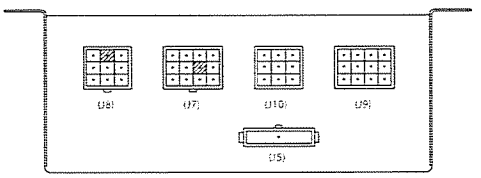

40-225 Amp Molded Power Section Transformer Usage *(see Figure 12)*

R/T Box Assembly Part No.	Primary Voltage at 50/60 Hz	1 VA XFMR Part No.	25 VA XFMR Part No.
57P-1015	120V	K-3216	K-3224
57P-1016	208-220V	K-3217	K-3225
57P-1017	230-240V	K-3218	K-3226
57P-1018	277V	K-3219	K-3227
57P-1019	380-400V	K-3220	K-3228
57P-1020	416-440V	K-3221	K-3229
57P-1021	460-480V	K-3222	K-3230
57P-1022	575-600V	K-3223	K-3231

40-3000 Amp - All Other Standard Types Transformer Usage *(see Figure 13)*

R/T Box Assembly Part No.	Primary Voltage at 50/60 Hz	1 VA XFMR Part No.	25 VA XFMR Part No.
50P-1026	120V	K-3216	K-3224
50P-1027	208-220V	K-3217	K-3225
50P-1028	230-240V	K-3218	K-3226
50P-1029	277V	K-3219	K-3227
50P-1030	380-400V	K-3220	K-3228
50P-1031	416-440V	K-3221	K-3229
50P-1032	460-480V	K-3222	K-3230
50P-1033	575-600V	K-3223	K-3231

Bill of Material

Item	Part No.	Description	Qty
1	See Chart	Transformer (1 VA)	2
2	See Chart	Transformer (25 VA)	2
3	K-1274	Relay Flange Mounted	2

Bill of Material

Item	Part No.	Description	Qty
1	See Chart	Transformer (25 VA)	2
2	See Chart	Transformer (1 VA)	2
3	K-1260	Coil Control Relay (24V)	2

Katolight Service - Master Repair Manual - Page 4559

Delayed Transition

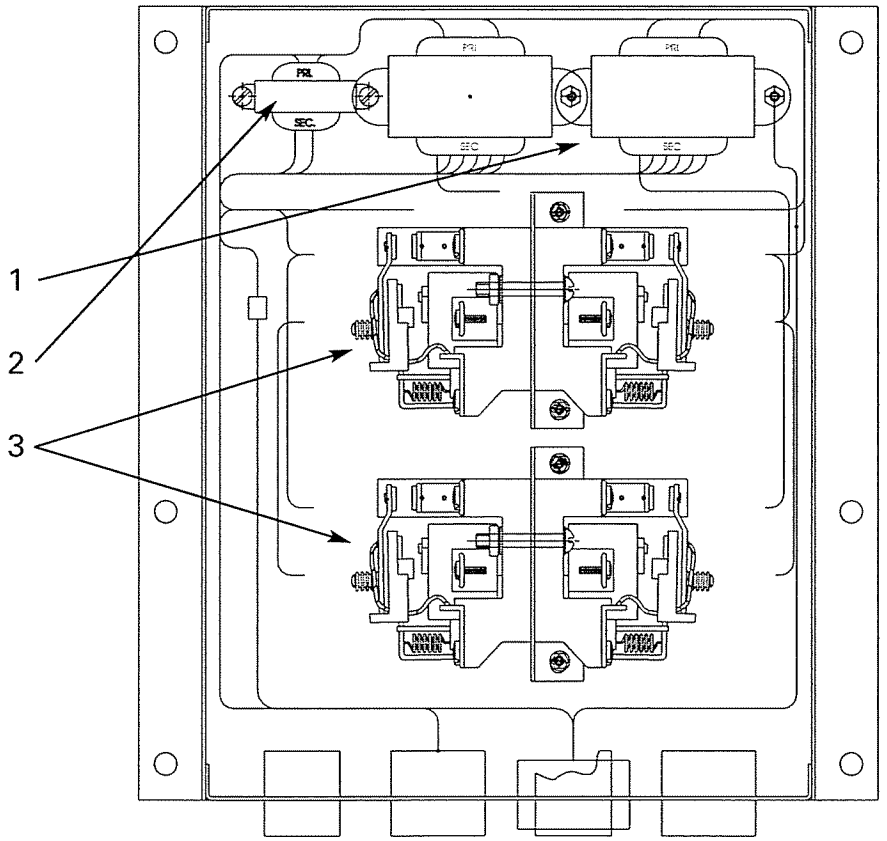

Figure 14

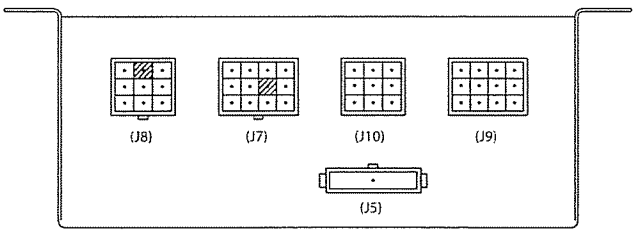

Transformer Usage

R/T Box Assembly Part No.	Primary Voltage at 50/60 Hz	1 VA XFMR Part No.	25 VA XFMR Part No.
50P-1034	120V	K-3216	K-3224
50P-1035	208-220V	K-3217	K-3225
50P-1036	230-240V	K-3218	K-3226
50P-1037	277V	K-3219	K-3227
50P-1038	380-400V	K-3220	K-3228
50P-1039	416-440V	K-3221	K-3229
50P-1040	460-480V	K-3222	K-3230
50P-1041	575-600V	K-3223	K-3231

Bill of Material

Item	Part No.	Description	Qty
1	See Chart	Transformer (25 VA)	2
2	See Chart	Transformer (1 VA)	2
3	K-1260	Coil Control Relay (24V)	4

Katolight Service - Master Repair Manual - Page 4560

Standard Transition R/T Box Schematic

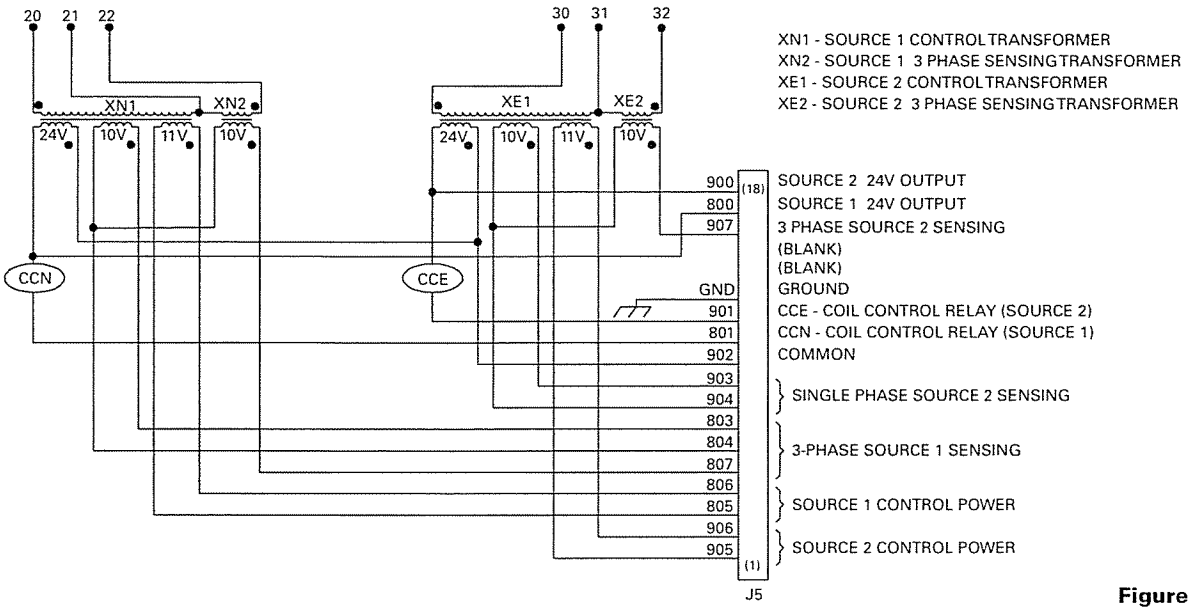

Figure 15

Delayed Transition R/T Box Schematic

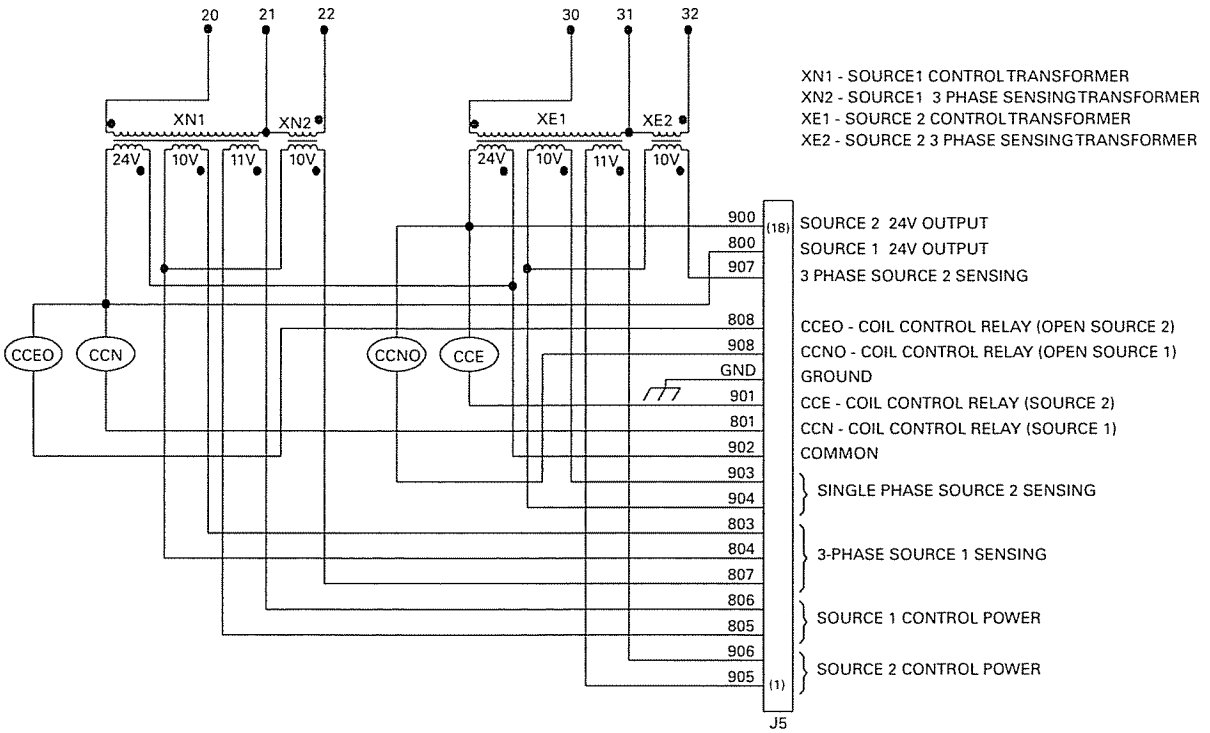

Figure 16

Katolight Service - Master Repair Manual - Page 4561

Troubleshooting and Diagnostics

⚠ DANGER ⚠

HAZARDOUS VOLTAGES CAN CAUSE SEVERE INJURY OR DEATH.
These charts may indicate problems that require authorized GE Zenith service personnel.
Hazardous voltages may exist on termination plugs other than those that go into the Entelli-Switch 250.

General Troubleshooting

The following troubleshooting guide is used to recognize, and determine basic faults. When using this guide, it will ask several questions about the condition of the switch. This guide will then list an order of the possible faults. You will then look at the first suspected fault to determine if it is the problem. If it is not a fault, you go to the second suspected fault. If you go through all of the suspected faults, or the chart instructs you to, call a GE Zenith Representative for further assistance.

NOTE: When you use the troubleshooting charts, the Annunciation column refers to the LED's on the control panel.

Symptom	Annunciation	Possible Cause(s)	Corrective Action
Engine does not START	SOURCE 2 AVAILABLE LED off	Engine start wires not terminated properly	Check engine start connections
		Generator is in OFF position	Investigate why Engine Control Switch was turned off
Engine does not stop	LCD Display - "TD Engine Cool Down"	U timing cycle not complete	Check U timer setting
	SOURCE 1 POSITION, and SOURCE 1 and SOURCE 2 AVAILABLE LEDs on, but U timer has timed out	Engine start wires not terminated correctly	Check Engine Start Connections
		Generator in MANUAL	Place generator in AUTO
ATS will not transfer to SOURCE 2 ZTG Series	SOURCE 2 AVAILABLE LED off	SOURCE 2 voltage or frequency not within acceptable parameters	Check: Engine Start Connections, Generator Breaker, Generator Output, and Engine Control Switch
	None	Power supply connector unplugged	Plug in connector
	LCD Display - "S1 _ _ _ _ TD XFR S1>S2 Time Remaining _ _ _ _"	**W** timing cycle not complete	Check **W** Timer setting
ATS will not transfer to SOURCE 1 ZTGD Series	LCD Display - "ATS Open Time Remaining _ _ _ _"	**DW** timing cycle not complete	Check **DW** Timer setting
	SOURCE 1 AVAILABLE LED off	SOURCE 1 voltage or frequency not within acceptable parameters	Check utility and utility breakers
	None	Power supply connector unplugged	Plug in connector
	LCD Display - "Diagnostic Code 001"	Limit switch or RT box connector unplugged	Call Technical Services
	LCD Display - "S1 OK Time Remaining _ _ _ _ Bypass"	**T** timing cycle not complete	Check **T** Timer setting
	LCD Display - "ATS Open Time Remaining _ _ _ _"	**TD** timing cycle not complete	Check **DT** Timer setting

Table 5

Katolight Service - Master Repair Manual - Page 4562

⚠ CAUTION ⚠

Due to hazardous voltage and current, GE Zenith recommends that a GE Zenith Certified technician or a qualified electrician must perform the installation and maintenance of the switch.

⚠ WARNING ⚠

Both power sources must be disconnected before manual operation of the switch.

A preventive maintenance program will insure high reliability and long life for the transfer switch. The preventive maintenance program for the transfer switch should include the following items:

Inspection and Cleaning

The switch should be inspected for any accumulation of dust, dirt, or moisture, and should be cleaned by vacuuming or wiping with a dry cloth or soft brush. do not use a blower since debris may become lodged in the electrical and mechanical components and cause damage.

Remove the transfer switch barriers and check the condition of the contacts. Any surface deposits must be removed with a clean cloth (do not use emery cloth or a file). If the contacts are pitted or worn excessively, they should be replaced. A general inspection of mechanical integrity should be made to include loose, broken or badly worn parts.

Servicing

All worn or inoperative parts must be replaced using GE Zenith recommended replacement parts. Please refer to the Replacement Parts manual for specific part information and ordering procedures. Please contact the GE Zenith Technical Services Department for the Replacement Parts manual.

The operating mechanism of the transfer switch is lubricated with Lubriplate 105. The lubricant applied at the factory provides adequate lubrication for the lifetime of the switch. Should debris contaminate the mechanism, clean and apply additional Lubriplate.

GE Zenith can provide complete preventative maintenance services. Please contact the GE Zenith Technical Services Department for additional information.

CDT battery replacement - lithium batteries may last up to 10 years, however it is recommended that battery replacement be included in a 3-5 year service cycle. The battery maintains the exerceser memory only and does not otherwise affect the operation.

Testing

A manual operator handle is provided with the transfer switch for maintenance purposes only. Manual operation of the switch must be checked before it is operated electrically. **Both power sources must be disconnected before manual operation of the switch.** Insert the handle and operate the transfer switch between the Source 1 and Source 2 positions. The transfer switch should operate smoothly without binding. Return the switch to Source 1 position, remove the handle, and return it to the holder provided.

After completing the inspection, cleaning and servicing of the transfer switch, reinstall the switch cover, and close and lock the cabinet door. Reclose the circuit breakers feeding the utility and generator sources to the switch.

Initiate the electrical transfer test by activating the TS test switch. P timer will time out and the microcontroller will send an engine start signal. When the W time has elapsed, the switch will complete its transfer by closing into Source 2.

Deactivating the test switch will start retransfer to Source 1. The switch will complete its retransfer to Source 1 after the time delay of the T timer. The U engine overrun timer allows the engine generator to run unloaded for a preset cool down period.

NOTE: A periodic test of the transfer switch under load conditions is recommended to insure proper operation. (See National Electric Code articles 700 and 701).

⚠ WARNING ⚠

When performing a hi-pot or dielectric test on the power section, DISCONNECT the control panel plugs from the microprocessor to avoid potential damage.

Katolight Service - Master Repair Manual - Page 4563

Standard Transition — 40 to 200 Amps

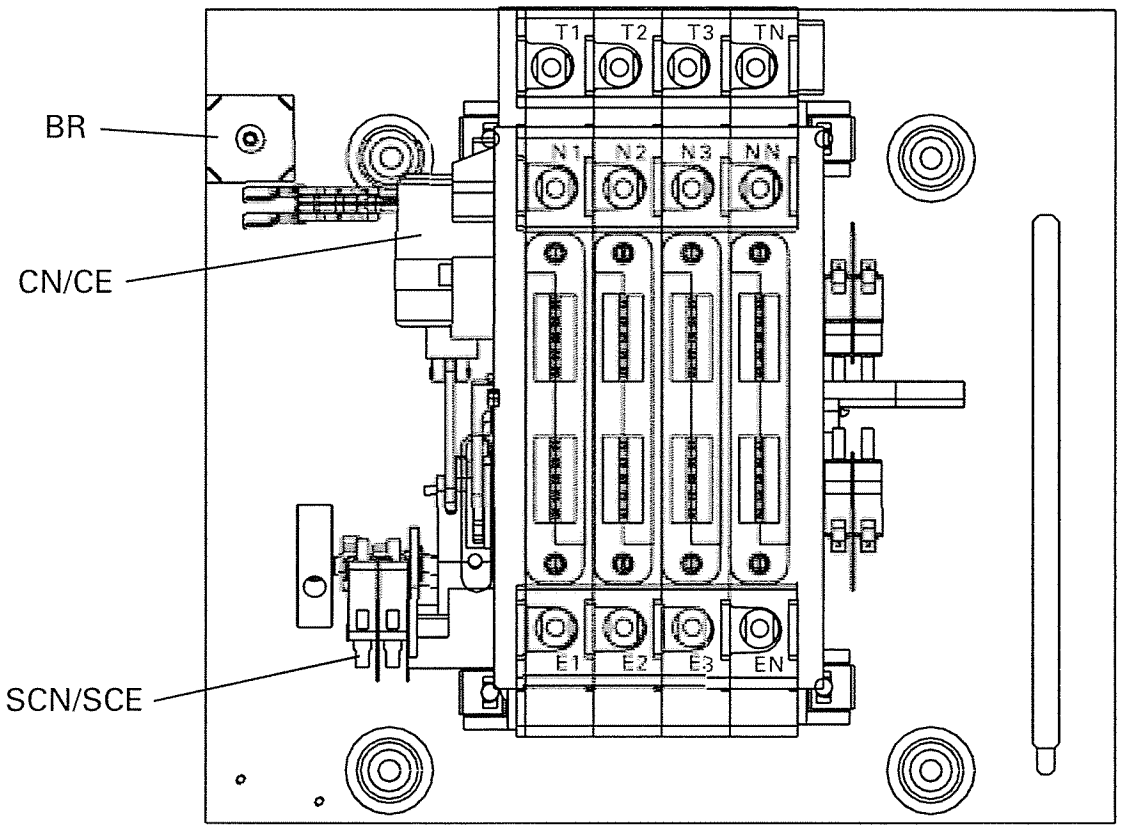

Figure 17

TAG	DESCRIPTION	VOLTAGE	40 TO 200 AMPS
CN/CE	Solenoid	120 208 220 240 277 380/416 440/480 575/600	K-2207 K-2208 K-2208 K-2228 K-2211 K-2212 K-2209 K-2213
	Solenoid Plunger and Link	ALL	57P-1030
SCN/SCE	Coil Cutout Switch	120-480V	L-3078
SCN/SCE	Coil Cutout Switch	600V	L-4027
BR	Rectifier	ALL	PS-5076
A3/A4	Auxiliary Contacts		L-3078

Katolight Service - Master Repair Manual - Page 4564

Standard Transition - 225 to 400 Amps

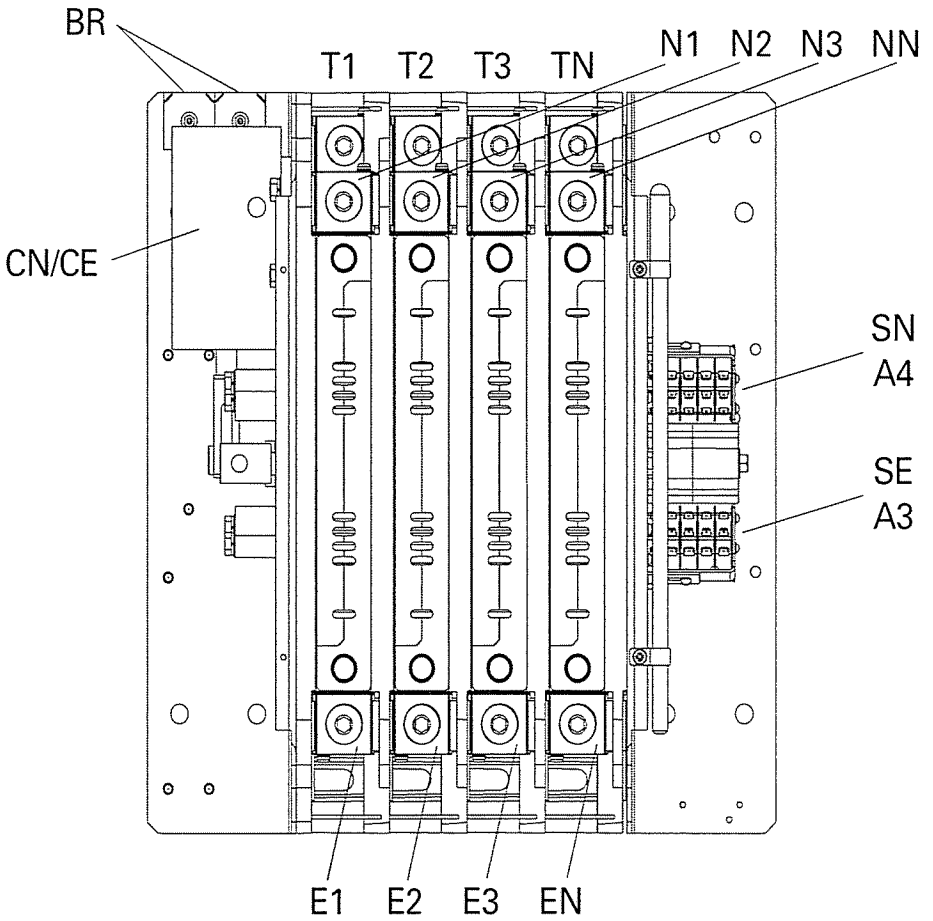

Figure 18

Tag	Description	Recommended as Spares	Stock Numbers by Amperage		
			225, 250*	260, 300*	400
N 1,2,3 N E 1,2,3 N T 1,2,3 N	Cable Connection Lug		S-2701	S-2701	S-2701
	Wire Size			#4-600 MCM	#4-600 MCM
			Coil Volts		
CN/CE	Solenoid	*	120	K-2245B	
			208/220	K-2246B	
			380/416	K-2247B	
			440/480	K-2248B	
			575/600	K-2249B	
SN/SE	Coil Cutout Switches		L-3078		
A3/A4	Auxiliary Contacts				
BR	Rectifier	*	PS-5076		

Katolight Service - Master Repair Manual - Page 4565

Standard Transition — 600 to 1200 Amps

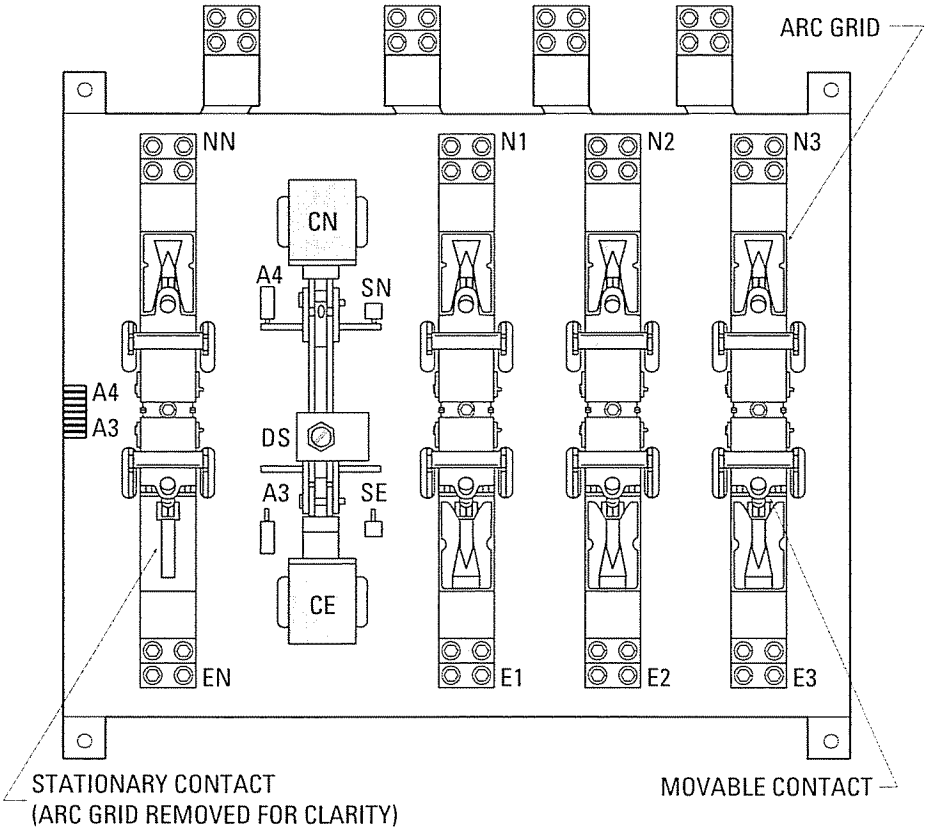

Figure 19

TAG	DESCRIPTION			STOCK NUMBERS BY AMPERAGE			
				600	800	1000	1200
N 1,2,3, N E 1,2,3, N T 1,2,3, N	Cable Connection Lug			S1393F (2)	S1392F (4)	S1392F (4)	S1392F (4)
	Wire Size			#2-600 MCM	#2-600 MCM	#2-600 MCM	#2-600 MCM
	Stationary Contact Assembly Kit			Consult Factory			
	Arc Grid Assembly Kit			23P-1366			
	Movable Contact Assembly Kit			Consult Factory			
CN/CE	Main Operating Coils	Coil Volts	Poles				
		120	2	K-2090F	K-2073F	K-2073F	K-2073F
		240	2	K-2092F	K-2070F	K-2070F	K-2070F
			3	K-2078F	K-2070F	K-2070F	K-2070F
			4	K-2091F	K-2074F	K-2074F	K-2074F
		208	3,4	K-2091F	K-2074F	K-2074F	K-2074F
		575/600	3,4	K-2095	K-2155	K-2155	K-2155
		480	3	K-2080F	K-2071F	K-2071F	K-2071F
			4	K-2079F	K-2071F	K-2071F	K-2071F
		416	3	K-2080F	K-2071F	K-2071F	K-2071F
SN	CCN Cut-out Switch		23P-1333				
SE	CCE Cut-out Switch		23P-1327	23P-1452			
A3	Emergency Position Aux Contact		(Qty 1) 23p-1327 (Qty 2) 23p-1328 (Qty 3) 23p-1334 (Qty 4) 23p-1336				
A4	Normal Position Aux Contact		(Qty 1) 23p-1333 (Qty 2) 23p-1334 (Qty 3) 23p-1328 (Qty 4) 23p-1330				
DS	Disconnect Switch		Operator L-4009; ; Contact Block L-1020				

Katolight Service - Master Repair Manual - Page 4566

Standard Transition — 1600 to 3000 Amps

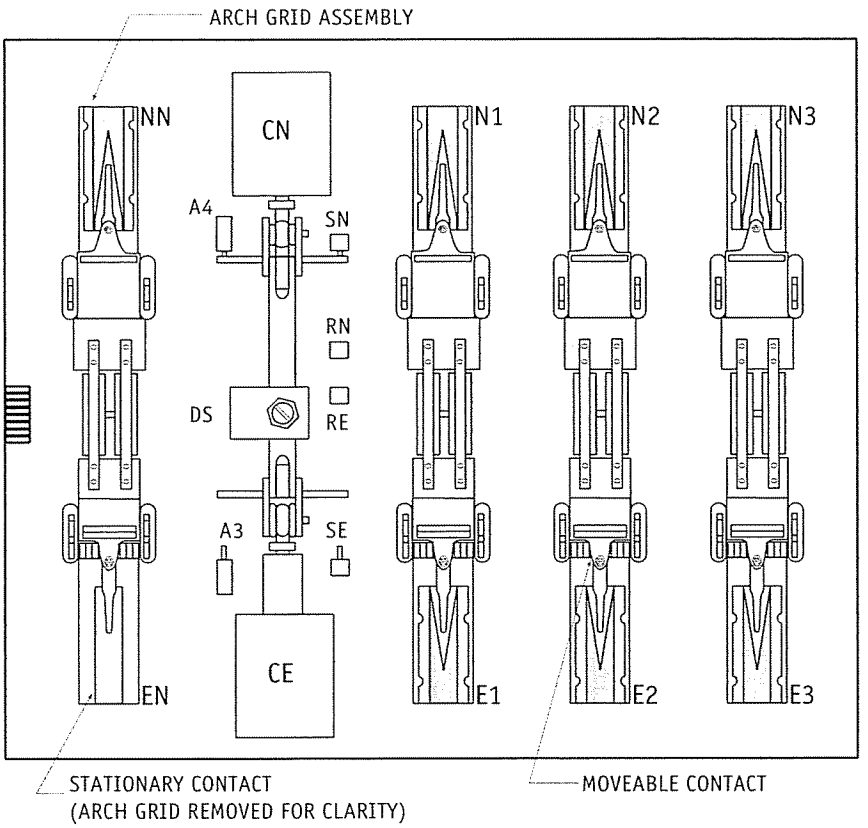

Figure 20

TAG	DESCRIPTION			STOCK NUMBERS BY AMPERAGE		
				1600	2000	3000
N 1,2,3, N E 1,2,3, N T 1,2,3, N	Cable Connection Lug			S1126F (2) Optional	S1126F (2) Optional	S1126F (2) Optional
	Wire Size			(8) #2-600 MCM	(8) #2-600 MCM	(8) #2-600 MCM
	Stationary Contact Assembly Kit			23P-1594	23P-1594	23P-1594
	Arc Grid Assembly Kit			23P-1171	23P-1171	23P-1171
	Movable Contact Assembly Kit			23P-1400	23P-1400	23P-1400
CN/CE	Main Operating Coils	Coil Volts	Poles			
		120	2	SPO	SPO	SPO
		240	2,3	K-2123F	K-2123F	K-2123F
			4	K-2127F	K-2127F	K-2127F
		208	3	K-2125F	K-2125F	K-2125F
			4	K-2128F	K-2128F	K-2128F
		575/600	3	K-2153F	K-2153F	K-2153F
			4	K-2154F	K-2154F	K-2154F
		480	3	K-2120F	K-2120F	K-2120F
			4	K-2130F	K-2130F	K-2130F
		416	3	K-2126F	K-2126F	K-2126F
SN	CCN Cut-out Switch		23P-1352			
SE	CCE Cut-out Switch		23P-1356			
A3	Emergency Position Aux Contact		(Qty 1) 23p-1356 (Qty 2) 23p-1357 (Qty 3) 23p-1353 (Qty 4) 23p-1355			
A4	Normal Position Aux Contact		(Qty 1) 23p-1352 (Qty 2) 23p-1353 (Qty 3) 23p-1357 (Qty 4) 23p-1359			
DS	Disconnect Switch		Operator L-4009; ; Contact Block L-1020			
RN, RE	Rectifier		23P-1473 (Up to 240V); 23P-1582 (Up to 600V)			

Katolight Service - Master Repair Manual - Page 4567

Standard Transition — 4000 Amps

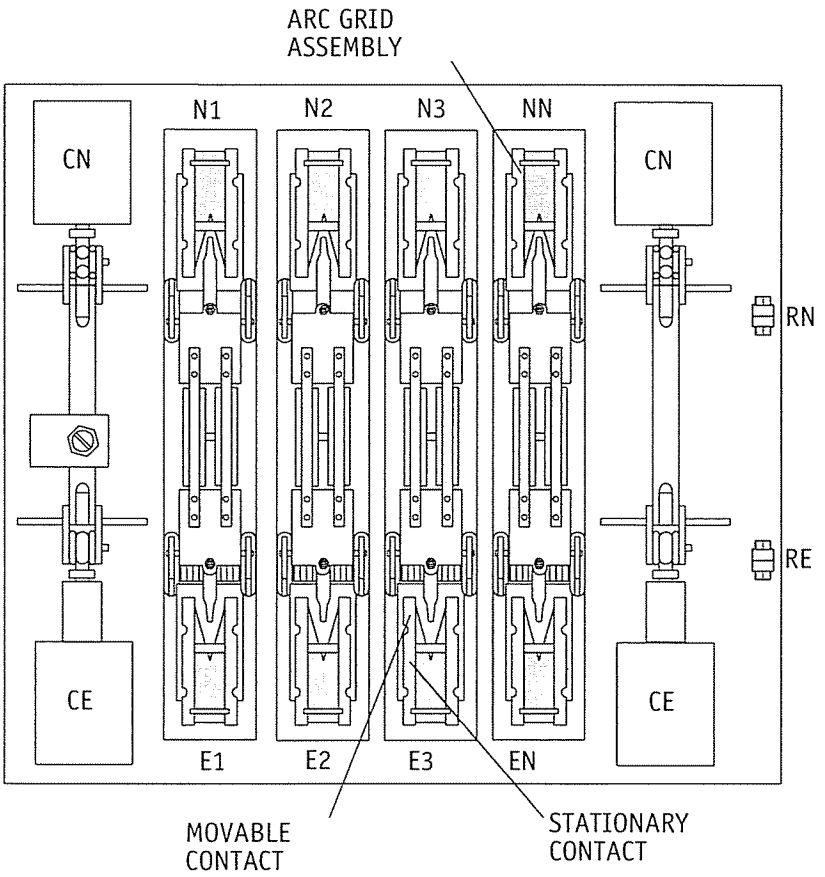

Figure 21

TAG	DESCRIPTION			STOCK NUMBERS
N 1,2,3, N E 1,2,3, N	Cable Connection Lug			S1511F (3) Optional
T 1,2,3, N	Wire Size			(12) #2-600 MCM
	Stationary Contact Assembly Kit			23P-1655
	Arc Grid Assembly Kit			23P-1171
	Movable Contact Assembly Kit			23P-1640
CN/CE	Main Operating Coils	Coil Volts	Poles	
		240	3	K-2219
			4	K-2219
		208	3	K-2226
			4	K-2226
		575/600	3	K-2221
			4	K-2221
		480	3	K-2218
			4	K-2218
		416	3	K-2220
SN	CCN Cut-out Switch		23P-1352	
SE	CCE Cut-out Switch		23P-1356	
A3	Emergency Position Aux Contact		(Qty 1) 23p-1356 (Qty 2) 23p-1357 (Qty 3) 23p-1353 (Qty 4) 23p-1355	
A4	Normal Position Aux Contact		(Qty 1) 23p-1352 (Qty 2) 23p-1353 (Qty 3) 23p-1357 (Qty 4) 23p-1359	
DS	Disconnect Switch		Operator L-4009; ; Contact Block L-1020	
RN, RE	Rectifier		23P-1473 (Up to 240V); 23P-1582 (Up to 600V)	

Katolight Service - Master Repair Manual - Page 4568

Delayed Transition - 40 to 400 Amps

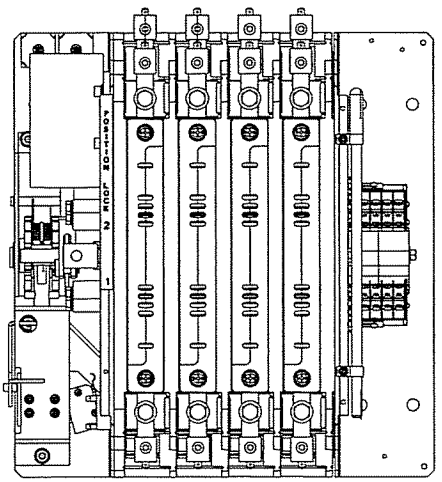

40-80 Amps

Figure 22

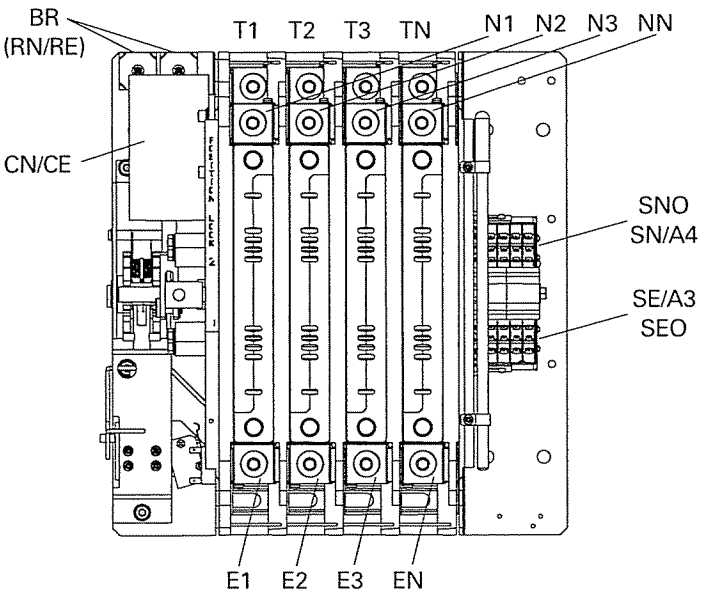

100-400 Amps

Figure 23

Tag	Description	as Spares		Stock Numbers by Amperage	
				40-80	100-400
N 1,2,3 N E 1,2,3 N T 1,2,3 N	Cable Connection Lug			S-2515	S-2701
	Wire Size			#8 MCM-3/0	#4-600 MCM
			Coil Volts	MAIN	SECONDARY
CN/CE	Solenoid	*	120	K-2245B	58P-1106
			208/240	K-2246B	58P-1107
			380/415	K-2247B	58P-1108
			440/480	K-2248B	58P-1109
			575/600	K-2249B	58P-1110
			575/600	K-2249B	58P-1110
	Handle-Manual	*	E3054		
	Handle-Grip		L-3078		
A3/A4	Auxiliary Contacts		L-3078		
SNO/SEO	Coil Cutout Switch	*	E3521		
BR	Rectifier (>380V)	*	PS-5076		
BR	Rectifier		PS-5152		

Katolight Service - Master Repair Manual - Page 4569

Delayed Transition - 600 to 1200 Amps

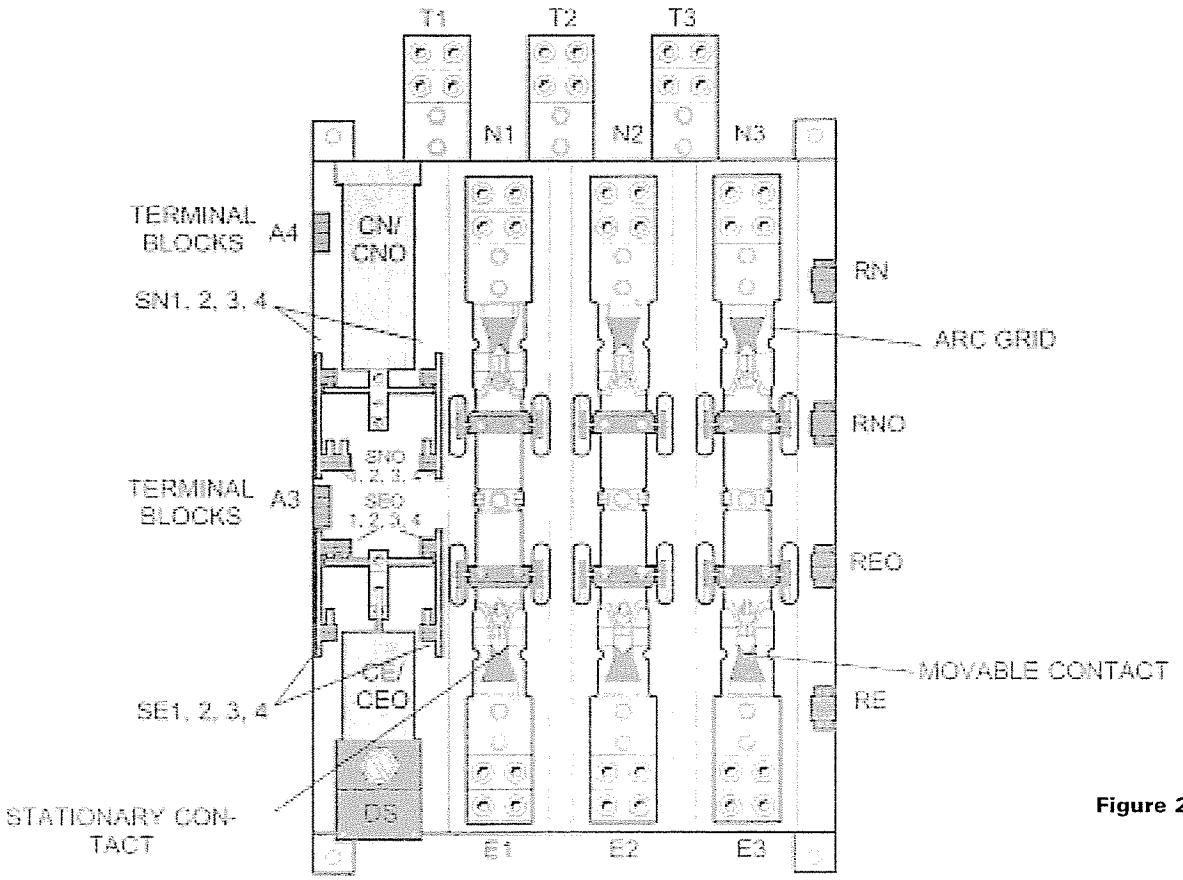

Figure 24

Tag	Description	Recommended as Spares	Stock Numbers by Amperage
			1000-1200
NL 1,2,3 EL 1,2,3 T 1,2,3 NN, EN, TN	Cable Connection Lug, CU Wire		2-1392F (4) 600MCM-2
	Stationary Contact Assembly Kit		26P-1336
	Arc Grid Assembly Kit		23P-1366
	Movable Contact Assembly Kit		26P-1334
	Movable Contact		26P-1335
RN/RNO RE/REO	Coil Rectifier	*	23P-1473 (Up to 240 VAC) 23P-1582 (Up to 600 VAC)
SN/SNO	Limit Switch		23P-1535(L); 23P-1533(R)
SE/SEO	Limit Switch		23P-1536(L); 23P-1534(R)
A3	Emergency Position Auxiliary Contact		23P-1536
A4	Normal Position Auxiliary Contact		23P-1535
DS	Disconnect Switch	*	Operator: L-4009; Contact Block: L-1020
CN/CNO CE/CEO	Main Operator Solenoids	*	See Chart Below

Voltage System					Solenoid Part No.
Volts	Ph	Wire	Coil VDC	Pole	800-1200
240	3	3	240	3	K-2147
120/208	3	4	208	3,4	K-2147
480	3	3	480	3	K-2157
277/480	3	4	480	3,4	K-2157
240/416	3	4	416	3	Consult Factory

Katolight Service - Master Repair Manual - Page 4570

Delayed Transition - 1600 to 3000 Amps

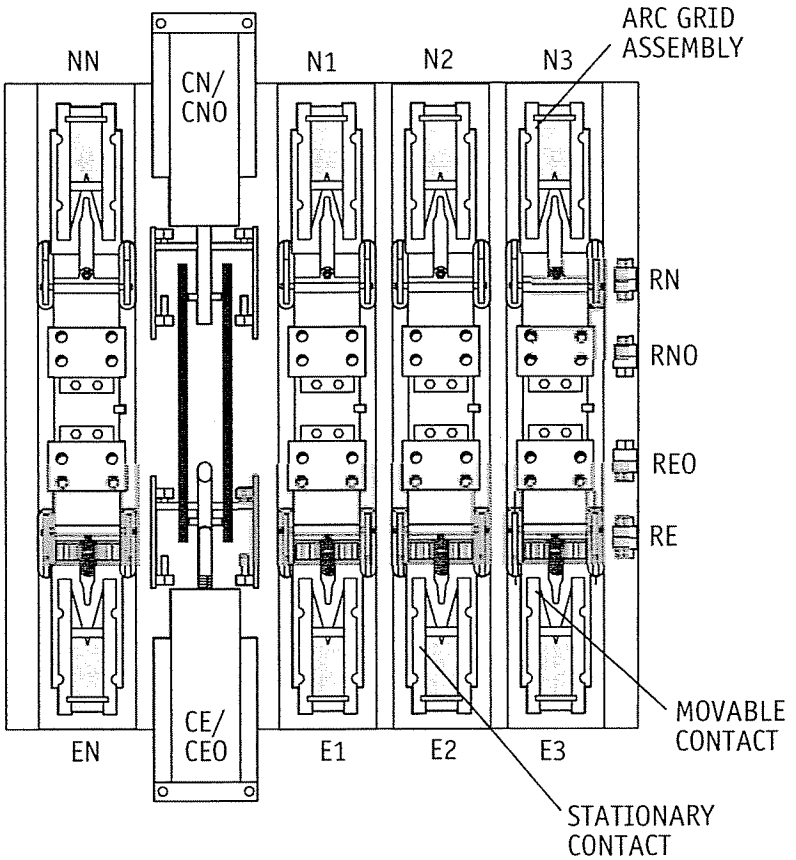

Figure 25

Tag	Description	Recommended as Spares	Stock Numbers by Amperage		
			1600	2000	3000
N1,2,3 E1,2,3 T1,2,3 NLN,ELN	Cable Connection Lug, CU Wire		S-1126F(2) Optional (8) 600MCM-2		
	Stationary Contact Assembly Kit		23P-4134X	23P-4134Y	23P-4134Z
	Arc Grid Assembly Kit		23P-1171	23P-1171	23P-1171
	Movable Contact Assembly Kit		23P-1400	23P-1400	23P-1344
CN/CNO CE/CEO	Main Operator Solenoids	*	See Chart Below		

Voltage System					Solenoid Part No.		
Volts	Ph	Wire	Coil VDC	Pole			
120	1	2	120	2	S.P.O.	S.P.O.	S.P.O.
120/240	1	3	240	2,3	K-2151	K-2151	K-2151
240	3	3	240	3	K-2151	K-2151	K-2151
120/208	3	4	208	3,4	K-2151	K-2151	K-2151
480	3	3	480	3	K-2160	K-2160	K-2160
575	3	3	575/600	3	S.P.O.	S.P.O.	S.P.O.
277/480	3	4	480	3,4	K-2160	K-2160	K-2160
120/240	2	4	240	4	K-2151	K-2151	K-2151
240/416	3	4	416	3	Consult Factory		

Operating Coil Hardware Kit				
SN/SNO-1,2	Switch Bracket Assembly	23P-1540	23P-1540	23P-1540
SE/SEO-1,2	Switch Bracket Assembly	23P-1541	23P-1541	23P-1541
SN/SNO-3,4	Switch Bracket Assembly	23P-1542	23P-1542	23P-1542
SE/SEO-3,4	Switch Bracket Assembly	23P-1543	23P-1543	23P-1543

Katolight Service - Master Repair Manual - Page 4571

Delayed Transition — 4000 Amps

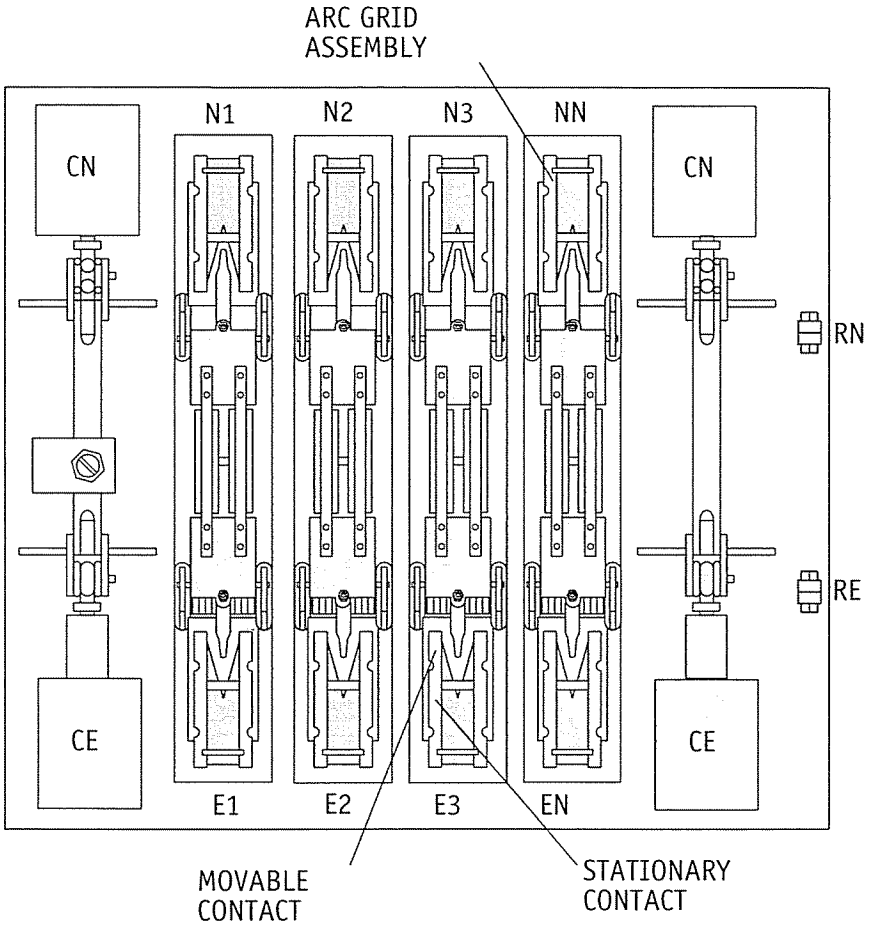

Figure 26

TAG	DESCRIPTION			STOCK NUMBERS
N 1,2,3, N E 1,2,3, N	Cable Connection Lug			S1511F (3) Optional
T 1,2,3, N	Wire Size			(12) #2-600 MCM
	Stationary Contact Assembly Kit			23P-1655
	Arc Grid Assembly Kit			23P-1171
	Movable Contact Assembly Kit			23P-1640
CN/CE	Main Operating Coils	Coil Volts	Poles	
		240	3	K-2215
			4	K-2215
		208	3	K-2227
			4	K-2227
		575/600	3	K-2217
			4	K-2217
		480	3	K-2214
			4	K-2214
		416	3	SPO
SN/SNO	CCN Cut-out Switch		23P-1568	
SE/SEO	CCE Cut-out Switch		23P-1569	
A3	Emergency Position Aux Contact		(Qty 1) 23p-1356 (Qty 2) 23p-1357 (Qty 3) 23p-1353 (Qty 4) 23p-1355	
A4	Normal Position Aux Contact		(Qty 1) 23p-1352 (Qty 2) 23p-1353 (Qty 3) 23p-1357 (Qty 4) 23p-1359	
DS	Disconnect Switch		Operator L-4009; ; Contact Block L-1020	
RN, RNO, RE, REO	Rectifier		23P-1473 (Up to 240V); 23P-1582 (Up to 600V)	

Katolight Service - Master Repair Manual - Page 4572

Standard Control Panel Layout (SSRCP)

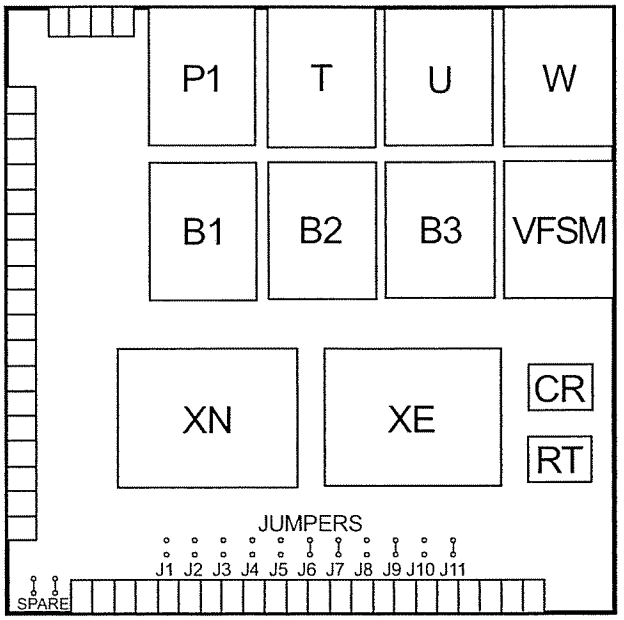

Figure 27

JUMPER	CONNECTS POINTS	REMOVE WHEN ACCESSORIES USED
J1	23, 23A	B1
J2	23A, 23B	B2
J3	23B, 23C	B3
J4	23C, 23Z	JIN, TS, C/D
J5	23Z, 27	T, YN
J6	25, 25Z	T3, R4
J7	28, 28Z	S1, C, C/D
J8	28Z, 29	P1 & U
J9	33A, 33Y	ER1, 2, 3, J1E
J10	33Z, 37	W
J11	35, 35Z	R4, W3

Panel Mount Control Relays

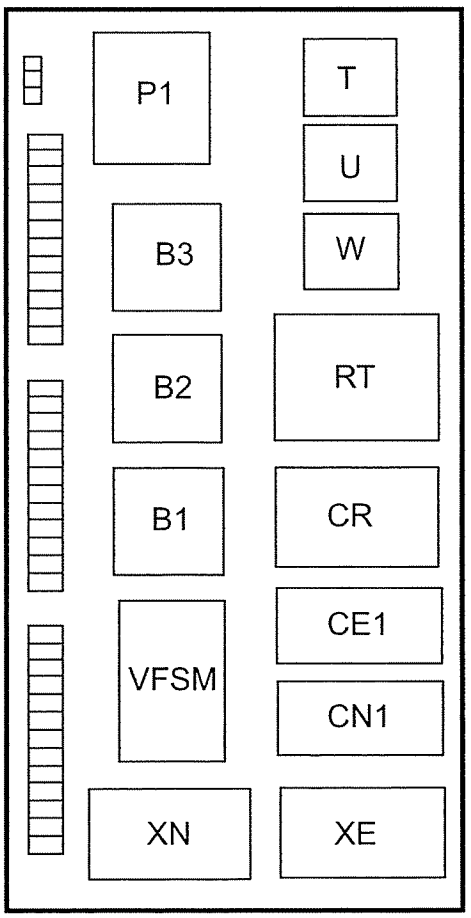

Figure 28

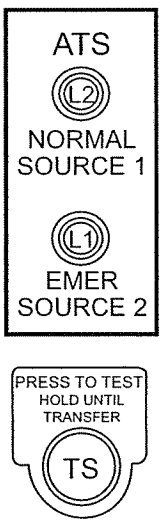

TAG	DESCRIPTION
L1 L2	ATS Source 2 (EMER) Position Indicator ATS Source 1 (NORMAL) Position Indicator Lens Source 1 (NORMAL) Lens Source 2 (EMER) Bulb Socket Source 2 (EMER) Bulb Source 1 (NORMAL) Bulb
TS	Test Switch Operator, Momentary Contact Block N.C. Contact Mounting Base

Katolight Service - Master Repair Manual - Page 4573

Sequence of Operation

The information package supplied with the transfer switch includes a schematic diagram and description of operation of all accessories provided.

The sequence for load transfer to Source 2 begins automatically when any phase of Source 1 falls below the preset "fail" or dropout point and this undervoltage failure condition is detected by the solid state phase relays B1, B2, B3.

The phase relays drop out, de-energizing Source 1 control relay CR, and engine start timer P1 begins its timing cycle. The P1 time delay is provided to override momentary outages and to prevent nuisance starting of the engine generator. If Source 1 voltage returns above the "restore" or pickup setting of the phase relays, the P1 timing cycle is reset to zero by the re-energization of the CR relay.

If Source 1 voltage does not return before the P1 time delay is completed, the P1 timer drops out and sends a starting signal to the engine generator. Source 2 voltage and frequency sensing relay VFSM monitors the voltage and frequency of Source 2. When both the voltage and the frequency of Source 2 reach the preset "restore" or pickup points, the VFSM relay initiates the transfer to Source 2 and timer W begins its timing cycle. The W timer provides an adjustable transfer delay to Source 2 as required.

When the W time delay is completed, Source 2 control relay RT energizes and picks up the power relay, CE1 or CCE. The power relay connects voltage from Source 2 to the Source 2 switch operating circuit causing the switch to transfer its main contacts to Source 2. The switch is mechanically locked in Source 2 position. The power relay and Source 2 operator are de-energized when the SE limit switch is activated by the operator. The SN limit switch is deactivated at the same time, readying Source 1 control circuit for retransfer when Source 1 is restored.

The sequence for retransfer to Source 1 begins automatically when the voltage on all phases of Source 1 reach the preset "restore" or pickup point and this condition is detected by the solid state phase relays.

When Source 1 restores, the solid state phase relays B1, B2, B3 pick up and initiate retransfer of the switch to Source 1 by energizing timer T and beginning its timing cycle. The T timer provides an adjustable delay to ensure that Source 1 has stabilized before reconnection to the load. If Source 1 fails before the T time delay is completed, the phase relays drop out and the T timing cycle is reset to zero.

When the T time delay is completed, Source 1 control relay CR energizes and picks up the power relay, CN1 or CNN. The power relay connects voltage from Source 1 to Source 1 switch operating circuit causing the retransfer of the main switch contacts to Source 1. The switch is mechanically locked in Source 1. The power relay and Source 1 operator are de-energized when the SN limit switch is activated by the operator. The SN limit switch also energizes the engine over-run timer U and begins its timing cycle. The timer provides a period of time for the engine generator to run without load and cool down before shutdown. After the U time delay is completed, the P1 timer is energized and the engine generator is shutdown.

Katolight Service - Master Repair Manual - Page 4574

Solid State Timers

Solid state timers are adjustable from 0.1 second to 100 hours. The red timing indicator in the upper left corner flashes as the timer progresses through the timing cycle. When the timing cycle is completed, the indicator remains illuminated. A flathead screwdriver is required to change the setting, as shown in *Figure 30.*

The time unit is selected by turning the rotary switch at the lower right of the timer. Four selections are available: "Seconds", "Minutes", "Hours", "10 Hours". The time unit selected is displayed in the window below the time setting dial.

The time range is selected by turning the rotary switch at the lower left of the timer. Four ranges are available: "0-0.5", "0-1.0", "0-5.0", "0-10.0". The dial digits appear in the windows around the time setting knob.

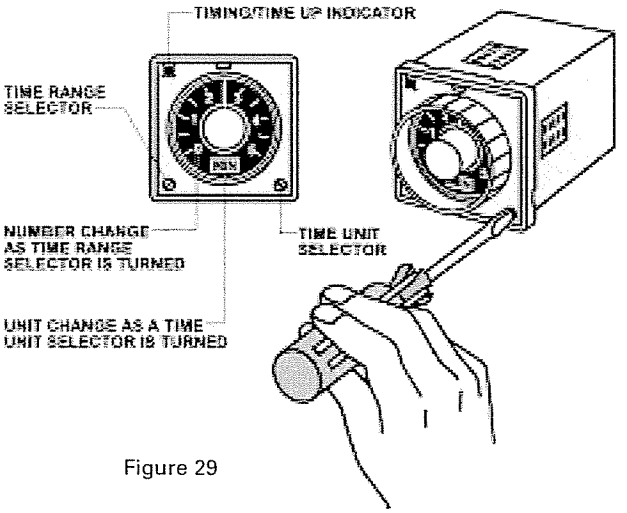

Figure 29

⚠ CAUTION ⚠

Do NOT change the setting while the timer is energized. Timer malfunction or damage may occur.

The factory setting of the solid state timers used in the Zenith standard package are shown in *Table 4.*

Timer	Factory Setting
T	30 minutes
U	5 minutes
W	1 second

Table 4

Voltage/Frequency Sensor (VFSM)

The "restore" or pickup point may be adjusted by rotating the adjustment screw as shown in *Figure 31.* Counter-clockwise rotation increases the pickup voltage.

"Restore"/Pickup Voltage (at 100% Frequency)
Adjustable: 80% to 95%
Factory Set: 90%
"Restore"/Pickup Frequency
Adjustable: 80% to 100%
Factory Set: 95%

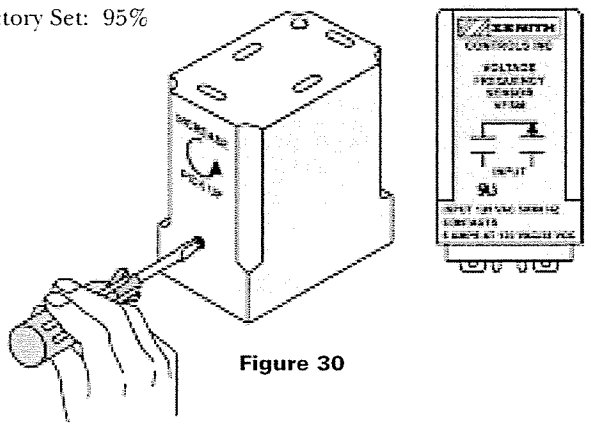

Figure 30

Solid State Phase Relay (ARSM)

The "restore" or pickup and "fail" or dropout points may be adjusted by using the following procedure. Use of a variable voltage supply (Variac) is required. The relay is illustrated in *Figure 32.*

1. Turn the "restore" or pickup adjustment fully clockwise.
2. Turn the "fail" or dropout adjustment fully counter-clockwise.
3. Set Variac to the desired "restore" or pickup voltage.
4. Rotate the "restore" or pickup adjustment counter-clockwise very slowly until the relay picks up. The LED will illuminate.
5. Set Variac to the desired "fail" or dropout voltage.
6. Rotate the "fail" or dropout adjustment clockwise very slowly until the relay drops out. The LED will go out.
7. Verify the setting by raising the voltage until the relay restores or picks up and lowering the voltage until the relay fails or drops out.

"Restore"/Pickup Voltage:
75% to 115% of Nominal
Factory Set:
90% of Nominal

"Fail"/Dropout Voltage:
55% to 105% of Nominal
Factory Set:
80% of Nominal

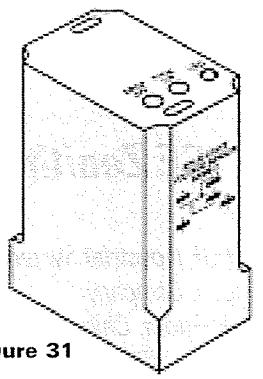

Figure 31

Katolight Service - Master Repair Manual - Page 4575



GE Zenith Controls

A Product of GE Industrial Systems
General Electric Company
830 West 40th Street, Chicago, IL 60609 USA
773 299-6600, Fax: 773 247-7805
www.geindustrial.com

ZENITH®
CONTROLS, INC.

INSTRUCTION MANUAL
AUTOMATIC TRANSFER SWITCH
40 THRU 4000 AMPS
ZTSH SERIES

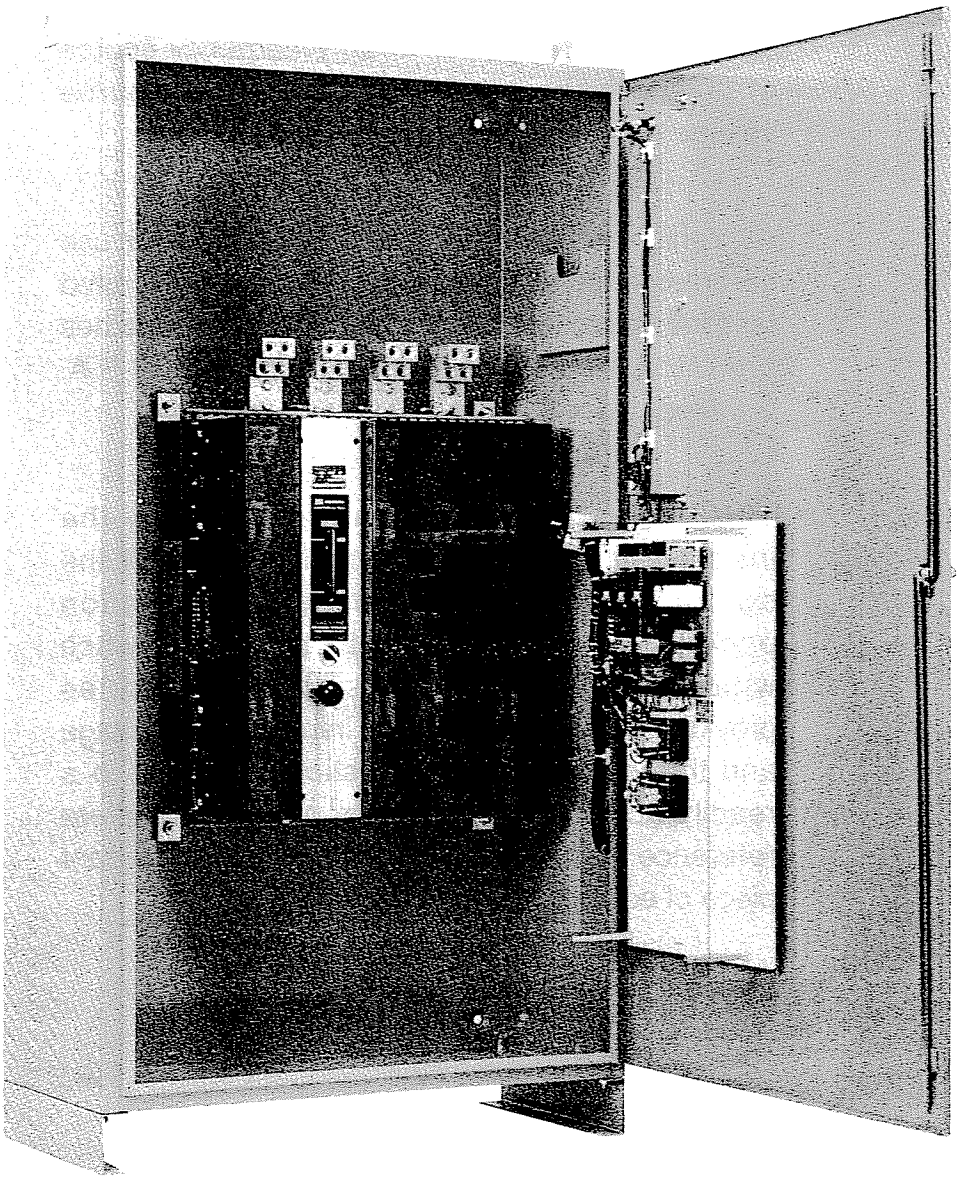

ZENITH CONTROLS, INC.
43R-1000E
Rev. 1/99

ISO 9001

INTRODUCTION

Zenith transfer switches are used to provide a continuous source of power for lighting and other critical loads by automatically transferring from the normal source of power to an emergency source of power in the event that the normal source voltage falls below preset limits.

All Zenith transfer switches are designed for use on emergency or standby systems, and are rated for total system or motor loads. Transfer switches are U.L. Listed under Standard 1008 and C.S.A. Certified under Standard C22.2 No. 178.

This manual provides information on the installation, operation, and maintenance of the switch. In addition, a complete information package is supplied with each transfer switch which details the features and accessories provided on that switch. The information package and the instruction manual should be kept in a readily accessible location to provide complete reference information on this critically important piece of equipment.

TABLE OF CONTENTS

Section I **INSTALLATION**

1. Equipment Inspection and Storage 1
2. Mounting 1
3. Power Connections 2
4. Control Connections 3
5. Final Equipment Inspection 3
6. Functional Test 3

Section II **OPERATION AND FEATURES**

1. Sequence of Operation 5
2. Zenith Module 9 Accessory Package 7
3. Zenith Optional Accessories 7

Section III **MAINTENANCE AND TESTING**

1. Inspection and Cleaning 8
2. Servicing 8
3. Testing 8
4. Troubleshooting 9

Section IV **ADJUSTMENTS AND SETTINGS**

1. Solid State Timers 11
2. Voltage/Frequency Sensor VFSM 11
3. Solid State Phase Relays ARSM 12
4. Electronic Exercise Clock Z1000-1A 12
5. Electronic Exercise Clock Z2000-2A 13

Appendix A **TYPICAL SCHEMATIC DIAGRAMS**

1. 40 to 260 Amp Switches 14
2. 400 Amp Switches 15
3. 600 to 1200 Amp Switches 16
4. 1600 to 3000 Amp Switches 17

Appendix B **REPLACEMENT PARTS**

1. Power Panel 40 to 260 Amp Switches 18
2. Power Panel 400 Amp Switches 19
3. Power Panel 600 to 1200 Amp Switches 20
4. Power Panel 1600 to 3000 Amp Switches 21
5. Power Panel 4000 Amp Switches 22
6. Standard Control Panel SSRCP 23
7. Optional Control Panel and Cabinet Door Pilot Devices 24

SECTION I – INSTALLATION

DANGER: HAZARDOUS VOLTAGE. CAN CAUSE SEVERE INJURY OR DEATH.
Turn OFF all power before installation, adjustment, or removal of transfer switch or any of its components.

Each transfer switch is factory wired and tested. A complete information package is furnished with each switch which includes:

a. Sequence or Operation.
b. Description and Operation of all accessories supplied.
c. Power panel connection diagram and schematic.
e. Description and identification of all customer field connections.

Installation of Zenith transfer switches includes:

a. Mounting the transfer switch cabinet.
b. Connection of all Normal, Emergency, and Load cables or bus bars.
c. Connection of external control circuits as required.

1. EQUIPMENT INSPECTION & STORAGE

Immediately inspect the transfer switch when received to detect any damage which may have occurred during transit. If damage is found or suspected, file claims as soon as possible with the carrier and notify the nearest Zenith representative.

Before installation, it is necessary to store the transfer switch in a clean dry place, protected from dirt and water. Provide ample air circulation and heat, if necessary, to prevent condensation.

Storage Temperature:
-30°C to +65°C (-22°F to +149°F)

Humidity:
5% to 95% (non-condensing)

2. MOUNTING

Adequate lifting means must be used to mount the transfer switch into place. The recommended method for moving the transfer switch using the lifting eyes and a spreader bar is illustrated in *Figure 1* below. Enough room should be allowed to open the cabinet doors fully for inspection and servicing of the switch per NEC and local codes.

Before drilling conduit entry holes or any accessory mounting holes, cover and protect the switch and control panel to prevent dirt and metal fragments from entering the mechanical and electrical components. Failure to do so may result in damage and malfunction of the switch.

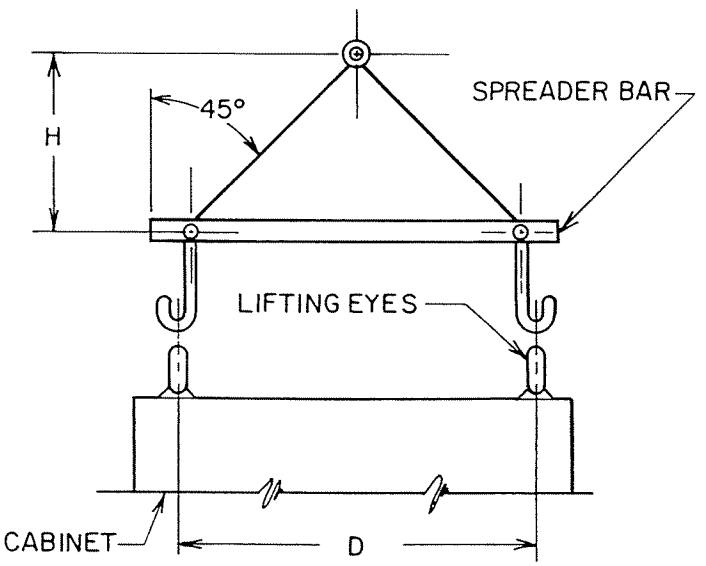

Figure 1

NOTE: When lifting the switch using a spreader bar, Height H must equal half of distance D.

3. POWER CONNECTIONS

Zenith transfer switches are supplied with U.L. Listed solderless screw type terminals as standard for the Normal, Emergency, and Load power connections. *Table 1* lists the number and sizes of the cable lugs supplied as standard for each switch amp rating.

Connect the Normal, Emergency, and Load conductors to the clearly marked terminals on the transfer switch. Remove surface oxides from cables by cleaning with a wire brush. Verify that all connections are correct before tightening the lugs. All cable lug connections must be tightened to the proper torque values as shown in *Table 2.*

Do not run cables or wiring behind front-connected transfer switches.
In cases where the Normal, Emergency, and Load connections are made to a rear connected bus bar, a compression washer, flat washer, and a minimum grade 5 bolt must be used and torqued to the values in *Table 3.*

Tightening Torque for Lugs

Socket Size Across Flat	Torque	
	Lb.-In.	Lb.-Ft.
1/8	45	4
5/32	100	8
3/16	120	10
7/32	150	12
1/4	200	17
5/16	275	23
3/8	375	31
1/2	500	42
9/16	600	50

Table 2

Tightening Torque for Bus Bars

Bolt Size	Torque Bolt (Grade 5)	
	Lb.-In.	Lb.-Ft.
1/4 – 20	72	6
5/16 – 18	132	11
3/8 – 16	300	25
1/2 – 13	720	60

Table 3

Screw Type Terminals for External Power Connections

Switch Size (Amps)	Normal, Emergency & Load Terminals		Fully Rated Neutral Bar (When Required)	
	Cable Per Pole	Range of Wire Sizes	Number of Cables	Range of Wire Sizes
40	1	#14 to 2 AWG	3	#14 to 1/0 AWG
80	1	#14 to 1/0 AWG	3	#14 to 1/0 AWG
100	1	#14 to 1/0 AWG	3	#14 to 1/0 AWG
150	1	#8 to 3/0 AWG	3	#6 AWG to 300 MCM
225	1	#6 AWG to 250 MCM	3	#6 AWG to 300 MCM
260	1	#6 AWG to 350 MCM	3	#6 AWG to 300 MCM
400	1	#4 AWG to 600 MCM	4	#2 AWG to 600 MCM
600	2	#2 AWG to 600 MCM	8	#2 AWG to 600 MCM
800	4	#2 AWG to 600 MCM	12	#2 AWG to 600 MCM
1000	4	#2 AWG to 600 MCM	12	#2 AWG to 600 MCM
1200	4	#2 AWG to 600 MCM	12	#2 AWG to 600 MCM
1600	Line and load terminals are located in rear and arranged for bus bar connection.		12	3/0 AWG to 750 MCM
2000			12	3/0 AWG to 750 MCM
3000			12	3/0 AWG to 750 MCM
4000			12	3/0 AWG to 750 MCM

Table 1

4. CONTROL CONNECTIONS

A complete information package is furnished with each transfer switch including a complete connection diagram and schematic which details all necessary control circuit field connections.

The engine start control wires connect to the terminals specified in the upper left corner of the control panel. *Figure 2* below shows the location of these terminals on the standard SSRCP printed circuit board mounted on the steel backplate. These terminals are clearly identified by a pre-printed label attached to the steel control panel. In the case of manual transfer switches, or in other applications not requiring the standard control panel, clearly marked terminal blocks are provided in the upper left corner of the control panel for the engine start control wires.

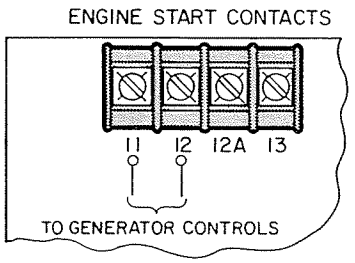

Figure 2

Terminals for field connection to the A3 Emergency auxiliary contacts and the A4 Normal Auxiliary contacts are also provided. These terminals are clearly marked and appear on the left side of the power panel. On 400 amp units, these terminals appear on the disconnect switch bracket above the operator handle, and are marked as illustrated in *Figure 3*.

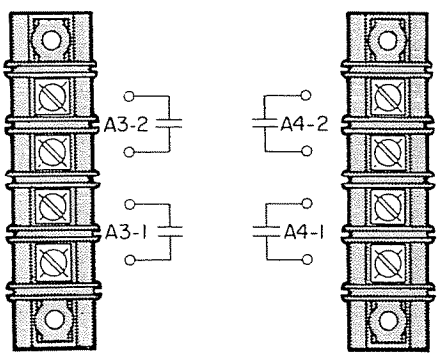

Figure 3

Make all other necessary external control connections to the appropriate terminal blocks located on the control panel. Insure that all connections are tightened to the torque specified in *Figure 4* below.

Control Wire Connections

Wire Size (AWG)	Torque Lb.-In.
18 – 16	19
14 – 8	19
6 – 4	36

Figure 4

5. FINAL EQUIPMENT INSPECTION

Prior to energizing the transfer switch:

a. Remove any debris incurred due to shipment or installation. DO NOT use a blower since debris may become lodged in the electrical and mechanical components and cause damage. Use of a vacuum is recommended.
b. Verify that all cabled connections are correct and that phase rotation of both sources match.
c. Check engine start connections and verify the correct connection of all control wires.
d. Check settings of all timers and adjust as necessary. Also adjust any optional accessories as required.
e. Check the integrity of power connections by verifying actual lug torque values as specified in this manual.
f. Make sure that all covers and barriers are installed and properly fastened.

6. FUNCTIONAL TEST

The functional testing of the transfer switch consists of manual and electrical tests described in this section. Before proceeding, refer to the information package supplied with the transfer switch. Read and understand all instructions and review the operation of all accessories provided.

6. FUNCTIONAL TEST (Continued)

A manual operator handle is provided with the transfer switch for maintenance purposes only. Manual operation of the switch must be checked before it is operated electrically. Both power sources MUST be disconnected before manual operation of the switch. Insert the handle and operate the transfer switch between the Normal and Emergency positions. The transfer switch should operate smoothly without binding. Return the switch to the Normal position, remove the handle, and return it to the holder provided.

Before starting the electrical operation test, check the equipment rating nameplate on the transfer switch to verify the correct system voltage. An example of the equipment rating nameplate is shown in *Figure 5*.

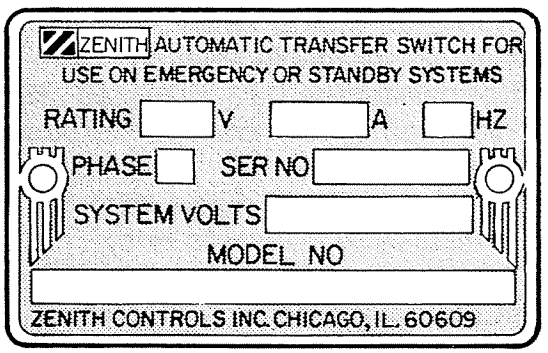

Figure 5

First, close the Normal source circuit breaker. The phase relays B1, B2, and B3 will pick up and the LED indicators will be illuminated. Verify the phase to phase voltages at the Normal line terminals.

Next, close the Emergency source breaker and start the engine generator. The VFSM relay will pick up and the LED indicator will be illuminated. Check the phase to phase voltages at the Emergency line terminals. Also, verify that the phase rotation of the Emergency source is the same as the phase rotation of the Normal source.

After the sources have been verified, shut down the engine generator, and put the starting control in the automatic position. Complete the visual inspection of the transfer switch, and close and lock the cabinet door.

Initiate the electrical transfer test by activating the TS switch. The CR control relay will drop out and the P1 engine start timer will start its timing cycle.

After, the P1 timer has completed its timing cycle, the engine start contact will close and signal the engine generator to start. The VFSM relay will energize. The switch will transfer to the Emergency source after the time delay of the W timer.

Deactivating the test switch will start retransfer to the Normal source. The switch will retransfer to the Normal source after the time delay of the T timer. The U engine over-run timer allows the engine generator to run unloaded for a preset cool-down time period.

A periodic test of the transfer switch under load conditions is recommended to insure proper operation. See National Electric Code articles 700 and 701.

SECTION II – OPERATION AND FEATURES

1. SEQUENCE OF OPERATION

Figure 6 on the facing page is a typical schematic diagram of a Zenith transfer switch with a Module 9 accessory package. The information package supplied with the transfer switch includes a schematic diagram and description of operation of all accessories provided.

The sequence for load transfer to the Emergency source begins automatically when any phase of the Normal source falls below the preset dropout point and this undervoltage failure condition is detected by solid state phase relays B1, B2, B3.

The phase relays drop out, de-energizing the normal control relay CR, and engine start timer P1 begins its timing cycle. The P1 time delay is provided to override momentary outages and to prevent nuisance starting of the engine generator. If the Normal source voltage returns above the pickup setting of the phase relays, the P1 timing cycle is reset to zero by the re-energization of the CR relay.

If the Normal source voltage does not return before the P1 time delay is completed, the P1 timer drops out and sends a starting signal to the engine generator. An Emergency voltage and frequency sensing relay VFSM monitors the voltage and frequency of the Emergency source. When both the voltage and the frequency of the Emergency source reach the preset pickup points, the VFSM relay initiates the transfer to the Emergency source and timer W begins its timing cycle. The W timer provides an adjustable transfer delay to the Emergency source as required.

When the W time delay is completed, the Emergency control relay RT energizes and picks up the power relay, CE1 or CCE. The power relay connects voltage from the Emergency source to the Emergency switch operating circuit causing the switch to transfer its main contacts to the Emergency source. The switch is mechanically locked in the Emergency position. The power relay and Emergency operator are de-energized when the SE limit switch is activated by the operator. The SN limit switch is deactivated at the same time, readying the Normal control circuit for retransfer when the Normal source is restored.

The sequence for retransfer to the Normal source begins automatically when the voltage on all phases of the Normal source reach the preset pickup point and this condition is detected by the solid state phase relays.

When the Normal source restores, the solid state phase relays B1, B2, B3 pick up and initiate retransfer of the switch to the Normal source by energizing timer T and beginning its timing cycle. The T timer provides an adjustable delay to insure that the Normal source has stabilized before reconnection to the load. If the Normal source fails before the T time delay is completed, the phase relays drop out and the T timing cycle is reset to zero.

When the T time delay is completed, the Normal control relay CR energizes and picks up the power relay, CN1 or CCN. The power relay connects voltage from the Normal source to the Normal switch operating circuit causing the retransfer of the main switch contacts to the Normal source. The switch is mechanically locked in the Normal position. The power relay and the Normal operator are de-energized when the SN limit switch is activated by the operator. The SN limit switch also energizes the engine over-run timer U and begins its timing cycle. The timer provides a period of time for the engine generator to run without load and cool down before shutdown. After the U time delay is completed, the P1 timer is energized and the engine generator is shutdown.

Typical Schematic Diagram

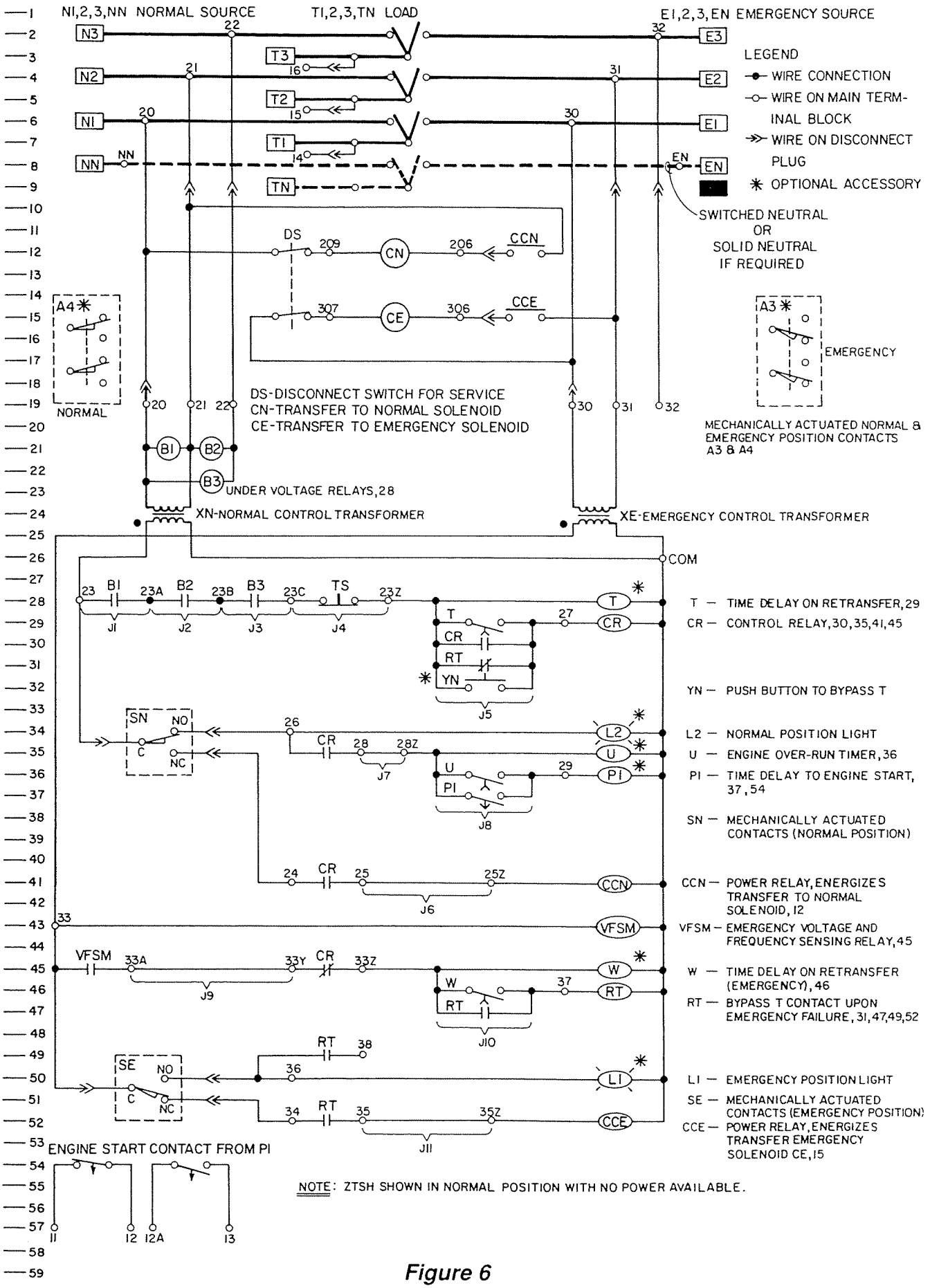

Figure 6

2. ZENITH MODULE 9 ACCESSORY PACKAGE

The Zenith Module 9 Accessory package includes nine of the commonly specified accessories. These accessories are:

A3 Auxiliary contact closes when the switch is in the Emergency position.

A4 Auxiliary contact closes when the switch is in the Normal position.

E Engine start contact closes to start the engine generator when the Normal source fails. 1 N.O., 1 N.C. contacts.

L1 Pilot light which indicates that the switch is in the Emergency position.

L2 Pilot light which indicates that the switch is in the Normal position.

P1 Solid state adjustable timer with range from 0.5 to 6.0 seconds. The contact closes to start the engine generator.

T Adjustable time delay to retransfer to Normal source after restoration.

U Adjustable time delay for engine cool down after the engine generator is signaled to shut down.

W Adjustable time delay to transfer to Emergency source after Normal source failure.

3. ZENITH OPTIONAL ACCESSORIES

Many control accessories are available to meet specific and special requirements. Some of the more commonly specified accessories are:

A6 Motor disconnect to de-energize external motor control circuit prior to transfer in either direction.

C Plant Exerciser which automatically starts the engine generator to run unloaded at selected intervals.

C/D Plant exerciser to allow engine generator to start and run unloaded or to simulate a power failure, start the engine generator, and run under load. This occurs at pre-selected intervals.

L3 Pilot light which indicates that the Normal source is available.

L4 Pilot light which indicates that the Emergency source is available.

P2 Pneumatic adjustable timer with range from 0.5 to 300 seconds. The contact closes to start the engine generator.

Q2 Peak shave or area protection control. Transfer is initiated when the remote area relay indicates failure or when peak shave mode is desired.

R4 In-Phase monitor prevents transfer until both sources are in phase. For use with Isochronous governors.

R43 In-Phase monitor prevents transfer until both sources are in phase. For use with mechanical governors.

S1 Four-position engine control selector switch: "Stop", "Hand Crank", "Test", and "Automatic".

S2 Disconnect switch in series with option E to disconnect engine-starting circuit.

S3 Source selector switch to select either source as the primary source.

T3/W3 Presignal time delay prior to transfer in either direction.

YE Pushbutton transfer to Emergency. Provides manual control of transfer to Emergency source.

YN Pushbutton retransfer to Normal. Provides manual control to retransfer to Normal Source.

SECTION III – MAINTENANCE AND TESTING

DANGER: HAZARDOUS VOLTAGE. CAN CAUSE SEVERE INJURY OR DEATH.
Turn OFF all power before maintenance, adjustment, or removal of transfer switch or any of its components.

A preventive maintenance program will insure high reliability and long life for the transfer switch. The preventative maintenance program for the transfer switch should include the following items.

1. INSPECTION AND CLEANING

Before doing any work on the transfer switch, de-energize all sources of power. The switch should be inspected for any accumulation of dust, dirt, or moisture, and should be cleaned by vacuuming or wiping with a dry cloth or soft brush. DO NOT use a blower since debris may become lodged in the electrical and mechanical components and cause damage.

Remove the transfer switch barriers and check the condition of the contacts. Any surface deposits must be removed with a clean cloth (DO NOT USE EMERY CLOTH OR A FILE). If the contacts are pitted or worn excessively, they should be replaced. A general inspection of mechanical integrity should be made to include loose, broken, or badly worn parts.

2. SERVICING

All worn or inoperative parts must be replaced using Zenith recommended replacement parts. Appendix B at the back of this manual includes replacement part information for typical power and control panel configurations. When ordering parts provide the model number or serial number from the transfer switch rating nameplate.

The operating mechanism of the transfer switch is lubricated with Lubriplate 105. The lubricant applied at the factory provides adequate lubrication for the lifetime of the switch. Should debris contaminate the mechanism, clean and apply additional Lubriplate.

3. TESTING

A manual operator handle is provided with the transfer switch for maintenance purposes only. Manual operation of the switch must be checked before it is operated electrically. Both power sources MUST be disconnected before manual operation of the switch. Insert the handle and operate the transfer switch between the Normal and Emergency positions. The transfer switch should operate smoothly without binding. Return the switch to the Normal position, remove the handle, and return it to the holder provided.

After completing the inspection, cleaning, and servicing of the transfer switch, reinstall the switch cover, and close and lock the cabinet door. Reclose the circuit breakers feeding the utility and generator sources to the switch.

Initiate the electrical transfer test by activating the TS test switch. The CR control relay will drop out and the P1 engine start timer will start its timing cycle.

After, the P1 timer has completed its timing cycle, the engine start contact will close and signal the engine generator to start. The VFSM relay will energize. The switch will transfer to the Emergency source after the time delay of the W timer.

Deactivating the test switch will start retransfer to the Normal source. The switch will retransfer to the Normal source after the time delay of the T timer. The U engine over-run timer allows the engine generator to run unloaded for a preset cool-down time period.

A periodic test of the transfer switch under load conditions is recommended to insure proper operation. See National Electric Code articles 700 and 701.

SECTION III – MAINTENANCE AND TESTING

4. TROUBLESHOOTING

Before beginning any troubleshooting activity, refer to the information package supplied with the transfer switch and review the description and operation of all accessories supplied. Also refer to Section II of this manual, Operation and Features.

CONDITION	*ITEMS TO BE CHECKED*
1. ENGINE GENERATOR DOES NOT START When Normal source fails or Test switch TS activated.	A. Verify the setting of time delay P1. B. Make sure timer P1 drops out and the engine-start contact closes after time delay is completed. C. Make sure the starting battery is charged and connected to the engine generator. D. Generator controls in "Automatic" mode. E. Verify wiring of the engine-start contact. F. If the generator does not start, contact the generator dealer.
2. DOES NOT TRANSFER TO EMERGENCY After generator starts.	A. Emergency source breaker should be closed. B. Emergency source voltage and frequency should meet the preset pick up values of the VFSM relay. C. Make sure Emergency control relay RT picks up after time delay W. D. Verify the circuit connections from the power relay, CE1 or CCE, to the Emergency switch operating circuit.
3. DOES NOT RETRANSFER TO NORMAL When Normal source restores or Test switch TS deactivated.	A. Normal source voltage should meet the preset pickup value of the phase relays. B. Make sure Normal control relay CR picks up after time delay T. C. Verify the circuit connections from the power relay, CN1 or CCN, to the Normal switch operating circuit.
3. ENGINE GENERATOR DOES NOT SHUTDOWN After retransfer to Normal	A. Verify the setting of engine over-run time delay U. B. Make sure timer P1 picks up and the engine-start contact has opened. C. Generator controls in "Automatic" mode. D. Verify wiring of the engine-start contact.

Table 4

FIELD NOTES

Model Number _____

Serial Number _____

Date Shipped _____

Start-Up Date _____

Drawings Supplied _____

TEST AND MAINTENANCE NOTES

DATE	TESTED	OBSERVATIONS	NOTES

SECTION IV – ADJUSTMENTS AND SETTINGS

1. SOLID STATE TIMERS

Solid state timers are adjustable from 0.1 second to 100 hours. The red timing indicator in the upper left corner flashes as the timer progresses through the timing cycle. When the timing cycle is complete, the indicator remains illuminated. A flat-head screwdriver is required to change the setting as shown in *Figure 7* below.

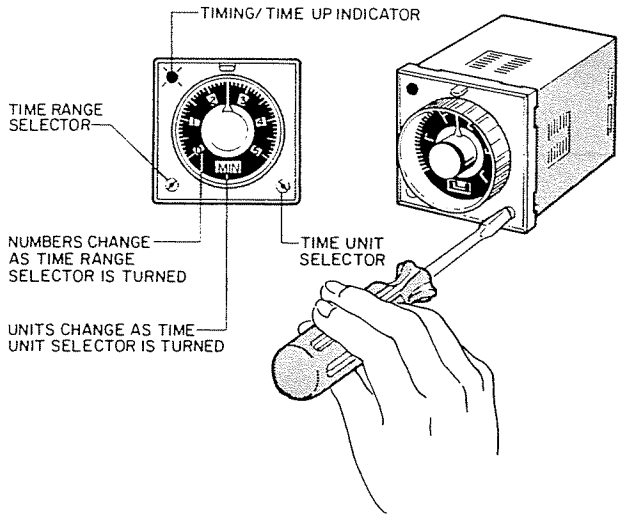

Figure 7

The time unit is selected by turning the rotary switch at the lower right of the timer. Four selections are available: "Seconds", "Minutes", "Hours", "10 Hours". The time unit selected is displayed in the window below the time setting knob.

The time range is selected by turning the rotary switch at the lower left of the timer. Four ranges are available: "0-0.5", "0-1.0", "0-5.0", "0-10.0". The dial digits appear in the windows around the time setting knob.

CAUTION: Do NOT change the setting while the timer is energized. Timer malfunction or damage may occur.

The factory setting of the solid state timers used in the Zenith Module 9 accessory package are shown in *Table 5* below.

TIMER	FACTORY SETTING
T	30 minutes
U	5 minutes
W	1 second

Table 5

2. VOLTAGE/FREQUENCY SENSOR (VFSM)

The pickup point may be adjusted by rotating the adjustment screw as shown in *Figure 8* below. Counter-clockwise rotation increases the pickup voltage.

Pickup Voltage (at 100% Frequency):
Adjustable: 80% to 95%
Factory set: 90%

Pickup Frequency:
Adjustable: 80% to 100%
Factory set: 95%

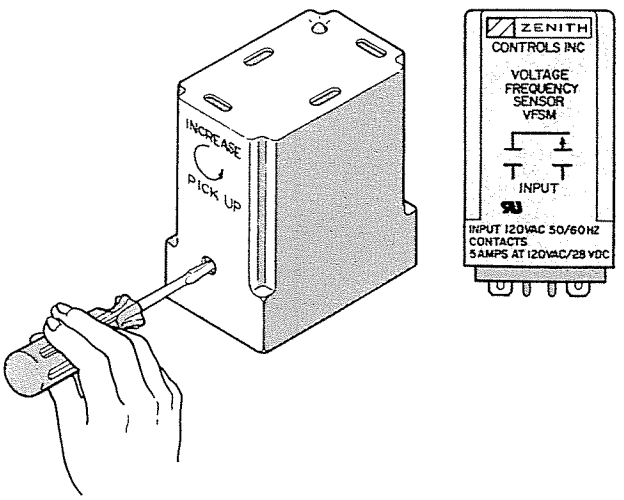

Figure 8

SECTION IV – ADJUSTMENTS AND SETTINGS (Continued)

3. SOLID STATE PHASE RELAY (ARSM)

The pickup and dropout points may be adjusted by using the following procedure. Use of a variable voltage supply (Variac) is required. The relay is illustrated in *Figure 9* below.

1. Turn the pickup adjustment fully clockwise.
2. Turn the dropout adjustment fully counter-clockwise.
3. Set Variac to the desired pickup voltage.
4. Rotate the pickup adjustment counter-clockwise very slowly until the relay picks up. The LED will illuminate.
5. Set Variac to the desired dropout voltage.
6. Rotate the dropout adjustment clockwise very slowly until the relay drops out. The LED will go out.
7. Verify setting by raising the voltage until the relay picks up and lowering the voltage until the relay drops out.

Pickup Voltage: 75% to 115% of Nominal
Factory Set: 90% of Nominal

Dropout Voltage: 55% to 105% of Nominal
Factory Set: 80% of Nominal

4. ELECTRONIC TIME SWITCH Z1000-1A

This time switch is used for either the C or C/D option (See page 7). Instructions for programming the time switch are located inside the cover of the switch. An indicating light will appear in the left side of the display to indicate the time switch is in operation. If the time switch has a flashing display, it indicates that a power outage has occurred. To restore the display, press the clock key and check the time of day. The battery should be checked and replaced if necessary.

Due to the 10-year memory retention feature, cutting the power to the time switch will not erase the user's program. The user's settings can be changed or cleared at any time. This feature eliminates the need for having to reprogram the time switch after long power outages.

The time switch will keep the clock running if power is lost by the installation of a 9 volt battery. It will not perform any of the programmed operations during a power outage.

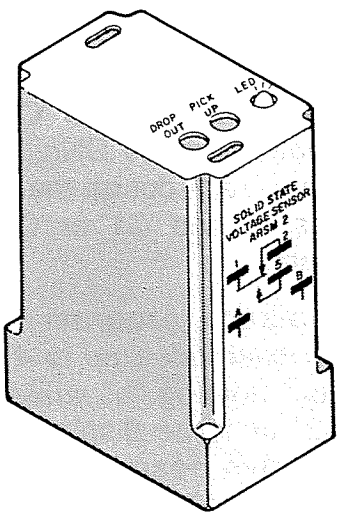

Figure 9

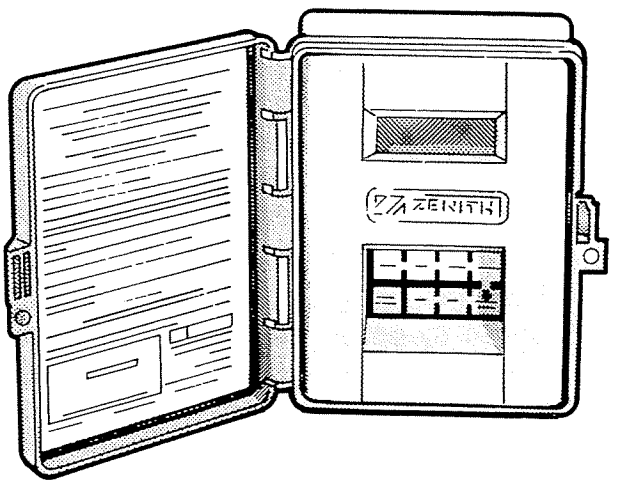

Figure 10

5. ELECTRONIC TIME SWITCH Z2000-2A

This time switch is used for the C/D option (see page 7). Time switch Z2000-1A is used for the C option.

A. Setting Time and Day:

Press and hold "⏲" button during the following adjustments:

1. Press "d" to set day pointer to correct day: 1 = Monday . . .7 = Sunday.
2. Press "h" to set the hour. The time of day is expressed in 24-hour military time: 04:00 = 4 a.m. . . . 20:00 = 8 p.m.
3. Press "m" to set minutes.
4. Release "⏲" button. Clock is running.

B. Programming:

Twenty-four total ON or OFF settings are available on one, several, or all days of the week.

1. Press "Prog" button. The blank program entry field will appear with two flashing points: "_:_"
2. Press either "C1" or "C2" depending on which channel you wish to program.
3. Next, select either "ON" or "OFF" by pressing "C1" or "C2" which toggles the ON/OFF mode.
4. You will now see the pointer flashing above "1" for Monday. To lock in Monday, press "Prog". If you want to enter further days, press "d" then "Prog" to lock them in. Solid pointers must be displayed over each day that the switching command is required.
5. Once the days are selected, press "h" button to enter the desired hour and press "m" to enter the desired minutes. To enter the program into the time switch, press "Prog". When the programming is complete, press "⏲" to return to the clock run mode. If the "⏲" button is not pressed, it will switch to the clock run mode after 60 seconds.

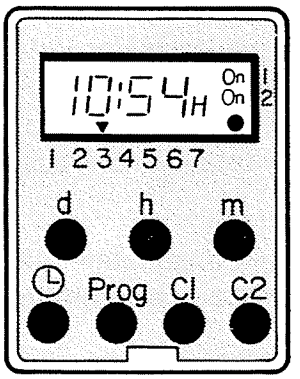

Figure 11

C. Program Review and Change:

Press "Prog" button to recall and review the "C1" and "C2" ON/OFF times. An "E" is displayed if all 24 positions are used or if the next available position is not filled. To change or clear a program, press "Prog" button to find the program to be changed or cleared. Change by pressing "d", "h", or "m" buttons as required. Clear the entire program by simultaneously pressing "h" and "m". Press "⏲" to return to the clock run mode.

D. Program Override

Each ON/OFF state can be manually changed by pressing "C1" or "C2". The next counteracting program cancels the manual override and resumes previous programming.

To continuously override automatic programming, press "m" and "C1" or "C2". The continuous override ON/OFF state is preceded by a black dot on the display. To cancel, press "m" and "C1" or "C2" until the dot disappears.

The automatic program can be continuously overridden up to 47 days by pressing and holding "h" while pressing "C1" or "C2" until the display shows the number of days desired. Starting the following day at "0:00", the display will show a "0:00", both "C1" and "C2" off, and an "H" in the lower right hand corner.

APPENDIX A - TYPICAL SCHEMATIC DIAGRAM 40 - 260 AMPS

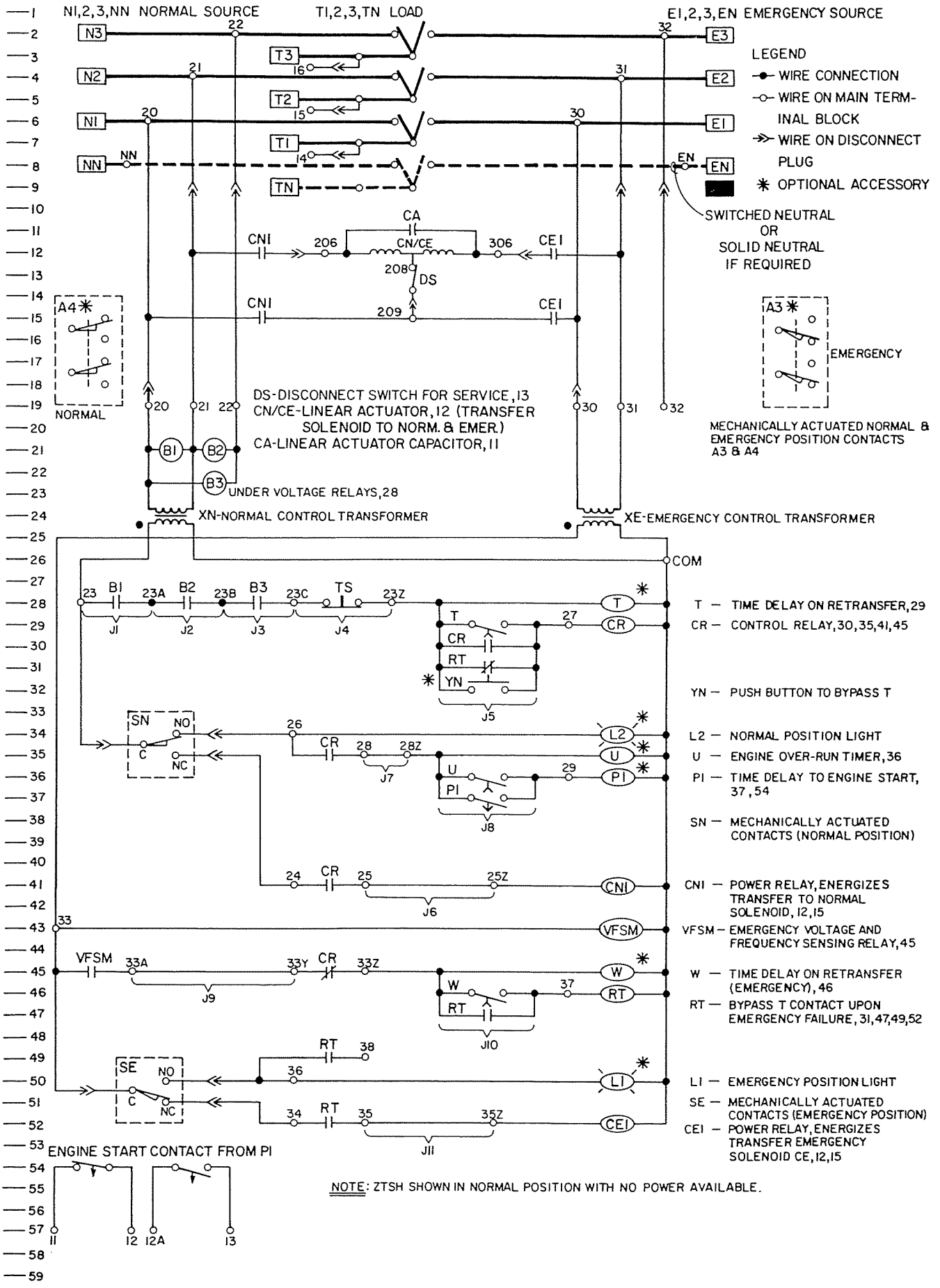

APPENDIX A - TYPICAL SCHEMATIC DIAGRAM 400 AMPS

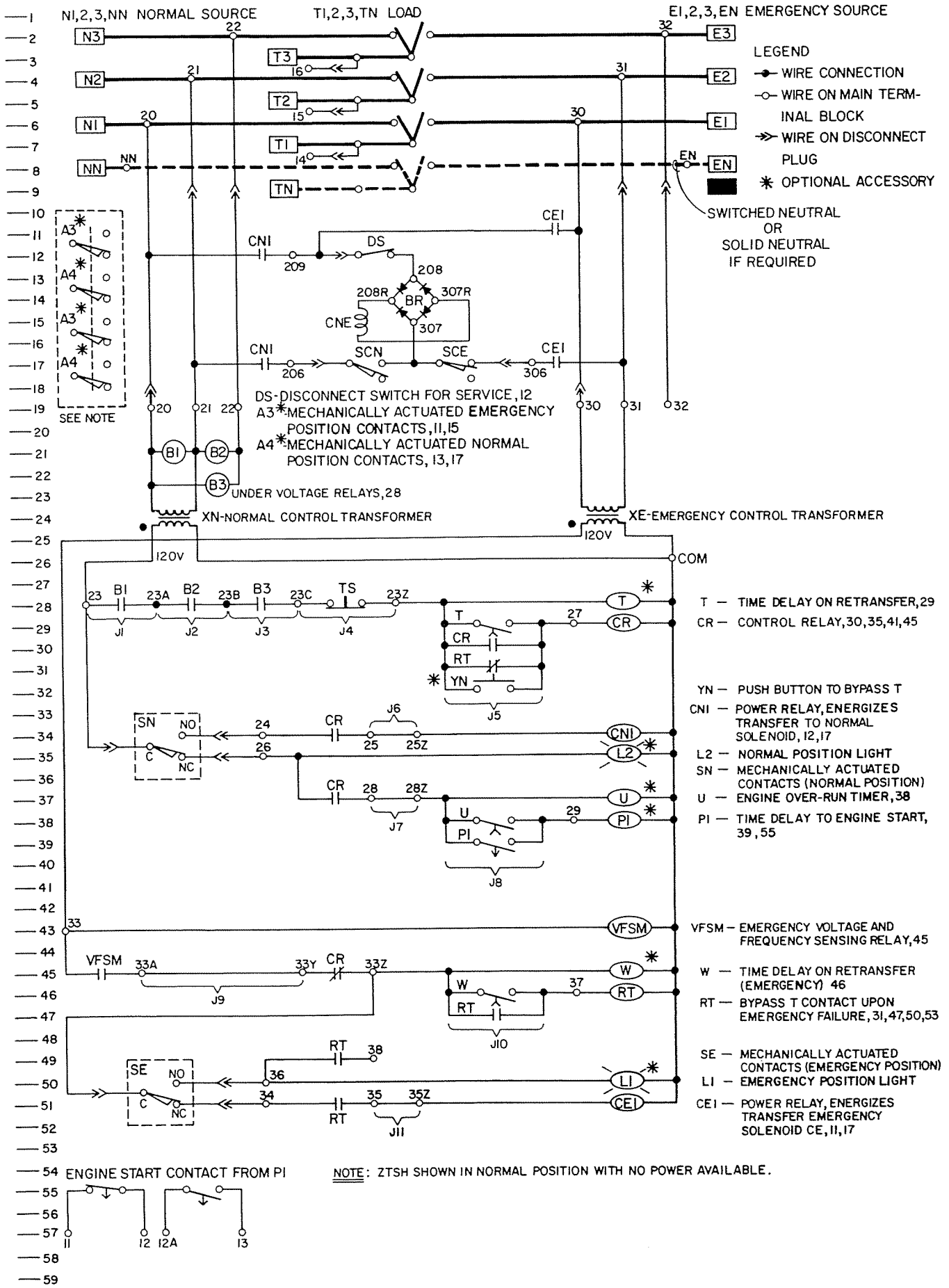

APPENDIX A - TYPICAL SCHEMATIC DIAGRAM 600 - 1200 AMPS

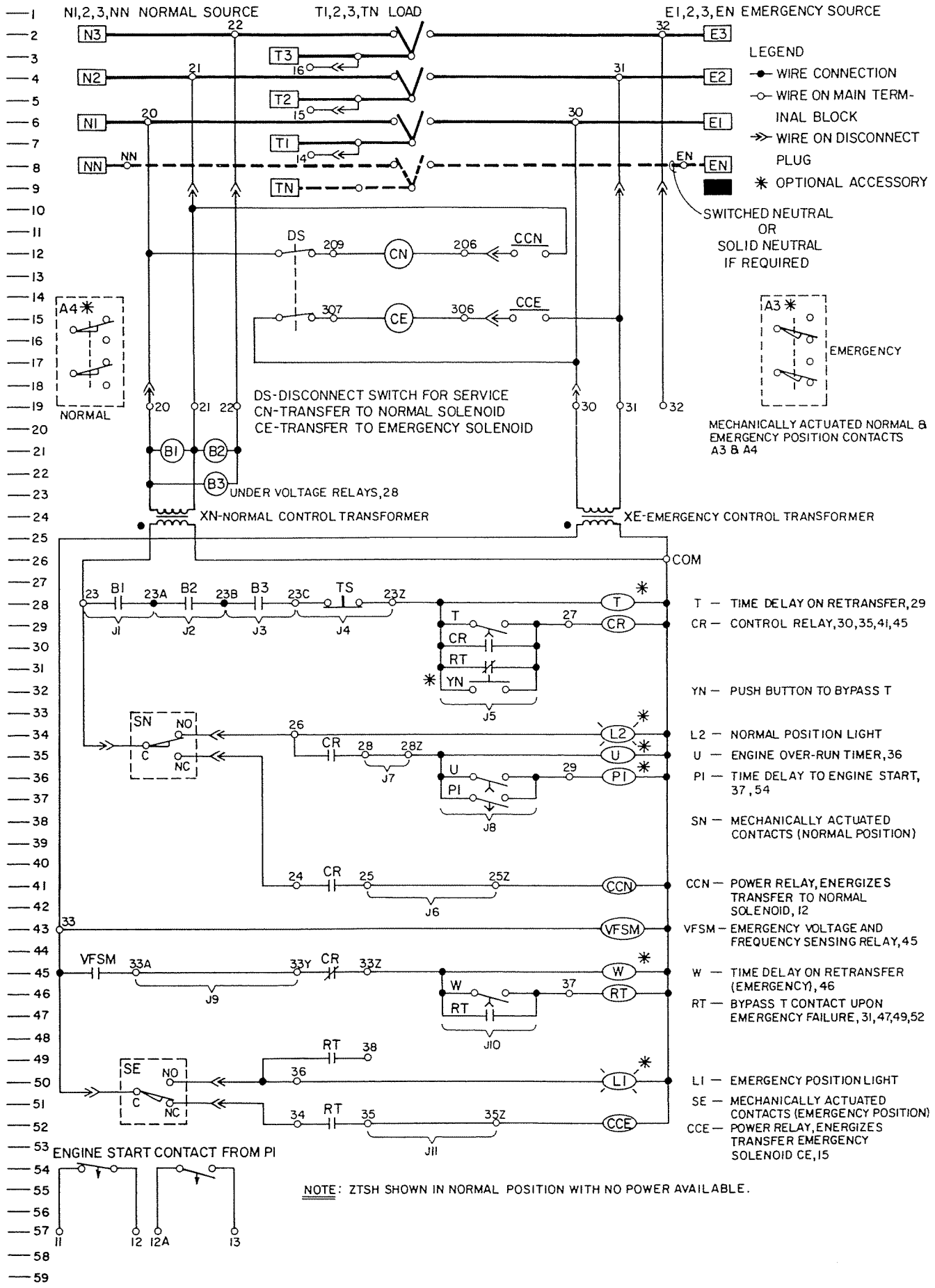

APPENDIX A - TYPICAL SCHEMATIC DIAGRAM 1600 - 3000 AMPS

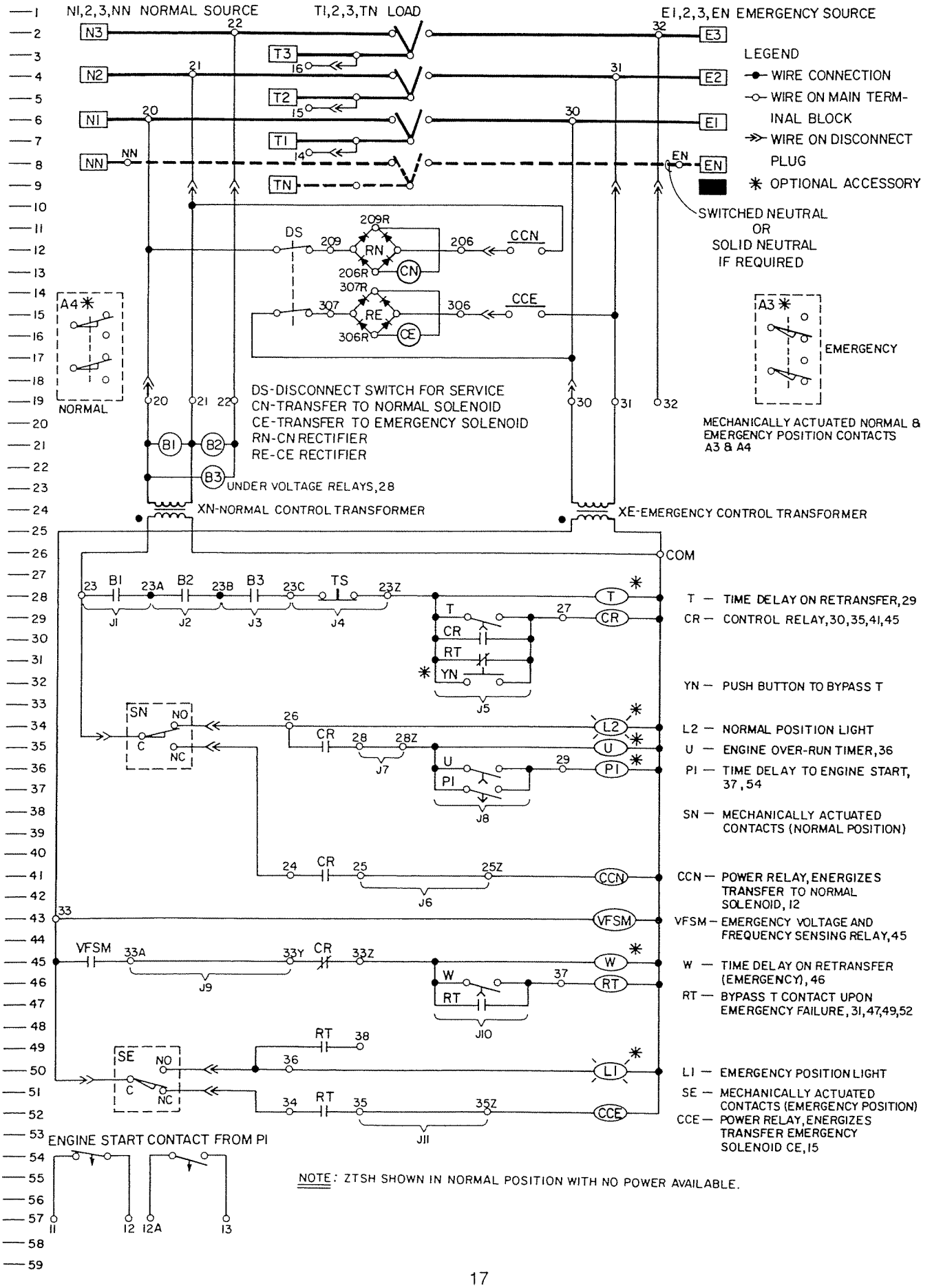

APPENDIX B - REPLACEMENT PARTS

1. POWER PANEL - 40 TO 260 AMPS

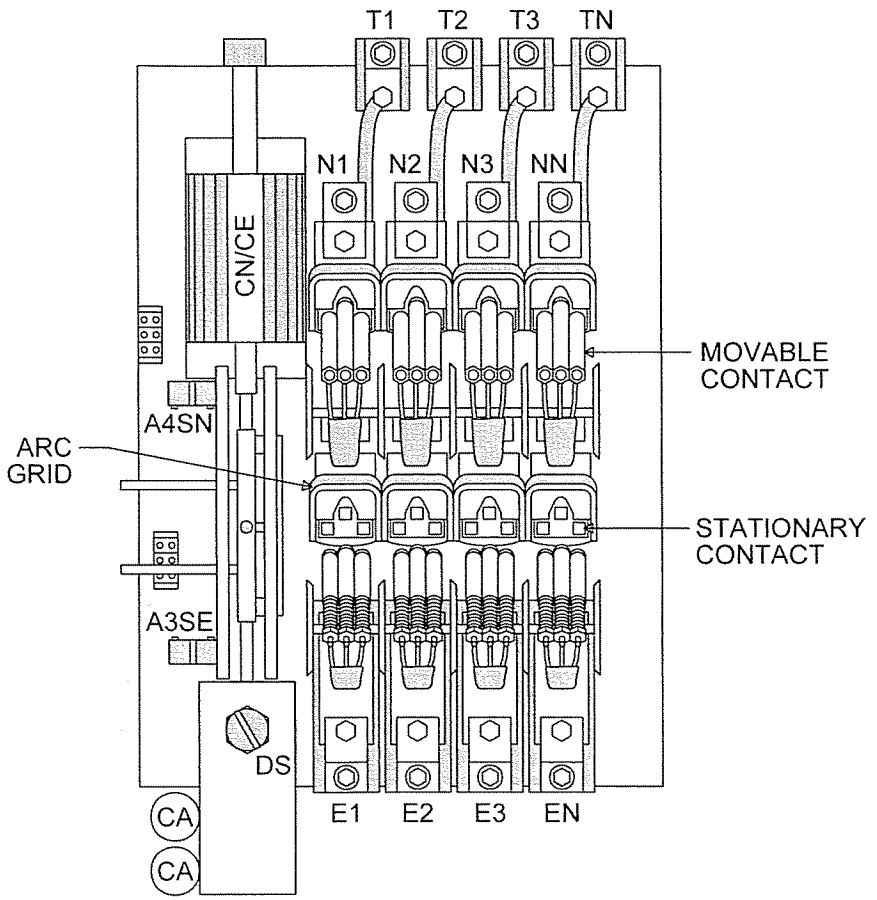

TAG	DESCRIPTION	STOCK NUMBERS BY AMPERAGE					
		40	80	100	150	225	260
N 1,2,3, N E 1,2,3, N T 1,2,3, N	Cable Connection Lug	PS-4419	PS-4423	PS-4423	27P-1128	27P-1126	27P-1127
	Wire Size	#14-2	#14-1/0	#14-1/0	#8-3/0	#6 to 250 MCM	#6 to 350 MCM
	Stationary Contact Assembly Kit	27P-1141	27P-1141	27P-1141	27P-1111	27P-1111	27P-1111
	Stationary Load Contact Assembly Kit	27P-1140	27P-1140	27P-1140	27P-1109	27P-1109	27P-1109
	Arc Grid Assembly Kit	27P-1014	27P-1014	27P-1014	27P-1014	27P-1014	27P-1014
	Movable Contact Assembly Kit	27P-1036	27P-1036	27P-1036	27P-1037	27P-1037	27P-1037
CN/CE, CA	Linear Actuator and Capacitors			CN/CE	CA (See Note)		
		Coil Volts	Poles		Quantity	Part	mf
	Note: 2S denotes two capacitors wired in series	120	2	K-2104PN	1	PS-4007	340-408
		240	2	K-2105PN	1	PS-4016	108-130
			3				
		208	3	K-2141PN	1	PS-4084	145-174
			4	K-2142PN	1	PS-4084	145-174
		575/600	3	K-2198PN	2S	PS-4083	36-43
			4	K-2197PN	2S	PS-4083	36-43
		480	3	K-2119PN	2S	PS-4008	72-86
			4	K-2111PN	2S	PS-4008	72-86
		416	3	K-2190PN	2S	PS-4008	72-86
SN	CN1 Cut-out Switch	L-5022					
SE	CE1 Cut-out Switch	L-5022					
A3	Emergency Position Auxiliary Contact	SPDT, L-5022; DPDT, L-5021					
A4	Normal Position Auxiliary Contact	SPDT, L-5022; DPDT, L-5021					
DS	Disconnect Switch	Operator I-4018; Contact Block L-1028					

Rev. 6/97

2. POWER PANEL - 400 AMPS

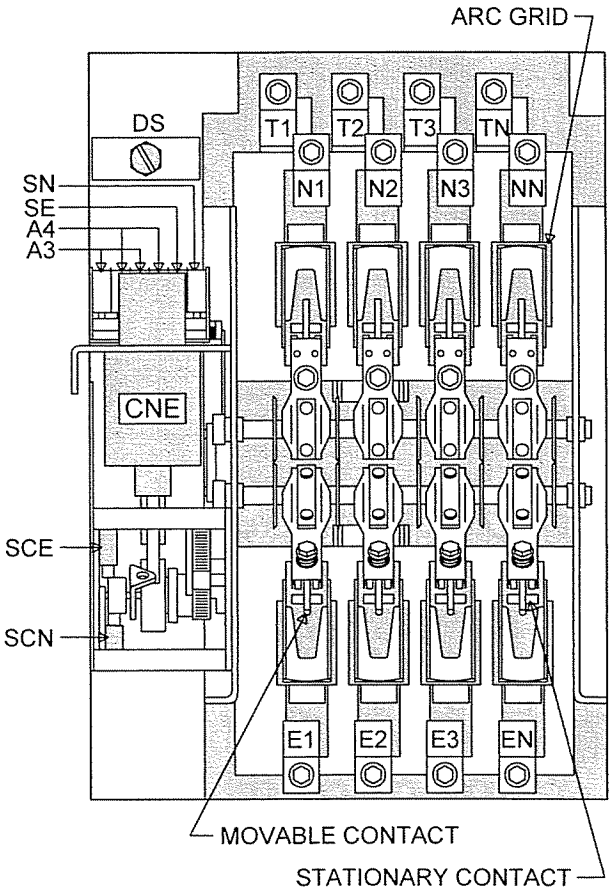

TAG	DESCRIPTION			PART NUMBER
N 1,2,3, N E 1,2,3, N T 1,2,3, N	Normal Emergency	Cable Connection Lugs #4-600 MCM		PS1815F
	Load			PS1815
	Stationary Contact Assembly Kit			
	Stationary Load Contact Assembly Kit			46P-1100E
	Arc Grid Assembly Kit			46P-1101E
	Movable Contact Assembly Kit			46P-1102E
	Linear Actuator and Capacitors			46P-1103E
	Linear Actuator and Capacitors			46P-1140
CNE	Main ATS Operating Coils	Coil Volts	Poles	
		120	2	K-2178
		240	3,4	K-2189
		208	3,4	K-2177
		575/600	3,4	K-2196
		480	3,4	K-2176
		416	3,4	K-2188
		380	3,4	K-2188
SN	CN1 Limit Switch			L-5021
SE	CE1 Limit Switch			
A3	ATS Emergency Position Switch			
A4	ATS Normal Position Switch			
SCN/SCE	CNE Limit Switches			L-3079
DS	ATS Solenoid Disconnect Switch			L-4018 L-1029
	Operator 2 - Position Maintain			
	Contact Block N.C. (1)			
BR	Rectifier			PS-5076

Rev. 6/97

APPENDIX B - REPLACEMENT PARTS (Continued)

3. POWER PANEL - 600-1200 AMPS

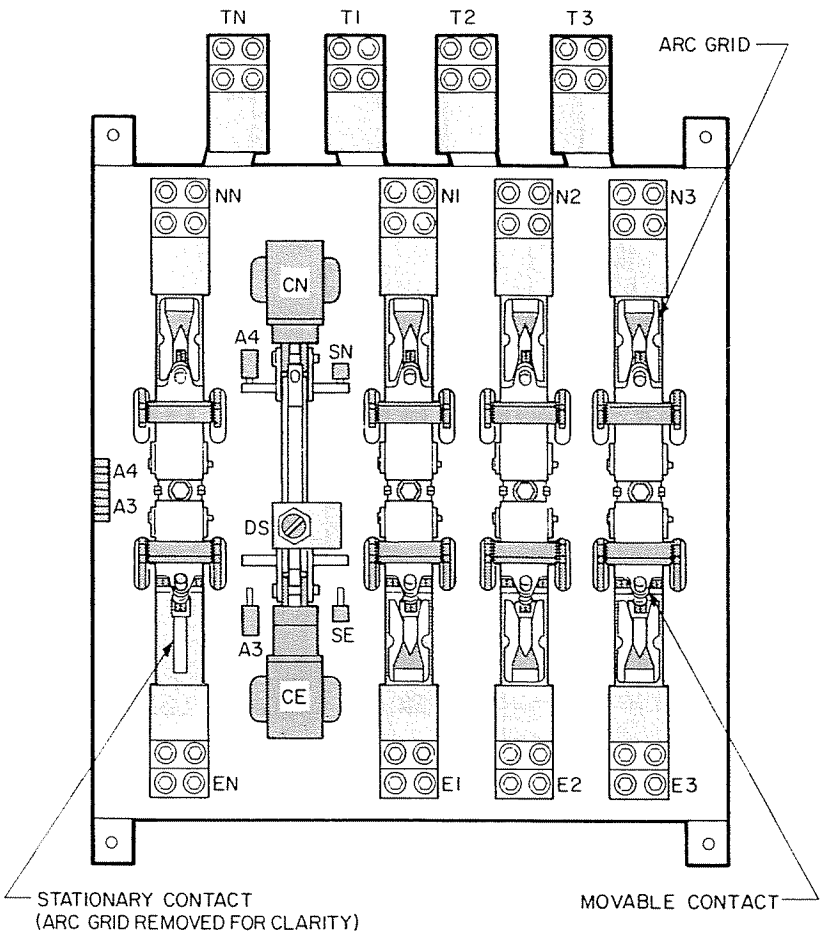

TAG	DESCRIPTION			STOCK NUMBER BY AMPERAGE			
				600	800	1000	1200
N 1,2,3,N E 1,2,3,N T 1,2,3,N	Cable Connection Lugs			S1393F (2)	**S1392F** **(4)**	S1392F (4)	S1392F (4)
	Wire Size			#2-600 MCM	#2-600 MCM	#2-600 MCM	#2-600 MCM
	Stationary Contact Assembly Kit			Consult Factory			
	Arc Grid Assembly Kit			23P-1366			
	Moveable Contact Assembly Kit			Consult Factory			
CN,CE	Main Operating Coils	Coil Volts	Poles				
		120	2	K2090F	K2073F	K2073F	K2073F
		240	2	K2092F	K2070F	K2070F	K2070F
			3	K2078F	K2070F	K2070F	K2070F
			4	K2091F	K2074F	K2074F	K2074F
		208	3,4	K2091F	K2074F	K2074F	K2074F
		575/600	3,4	K2095	K2155	K2155	K2155
		480	3	K2080F	K2071F	K2071F	K2071F
			4	K2079F	K2071F	K2071F	K2071F
		416	3	K2080F	K2071F	K2071F	K2071F
SN	CCN Cut-out Switch		23P-1333				
SE	CCE Cut-out Switch		23P-1327		23P-1452		
A3	Emergency Position Aux. Contact		(Qty. 1) 23P-1327 (Qty. 2) 23P-1328 (Qty. 3) 23P-1334 (Qty. 4) 23P-1336				
A4	Normal Position Aux. Contact		(Qty. 1) 23P-1333 (Qty. 2) 23P-1334 (Qty. 3) 23P-1328 (Qty. 4) 23P-1330				
DS	Disconnect Switch		Operator L-4009; Contact Block L-1020				

4. POWER PANEL - 1600-3000 AMPS

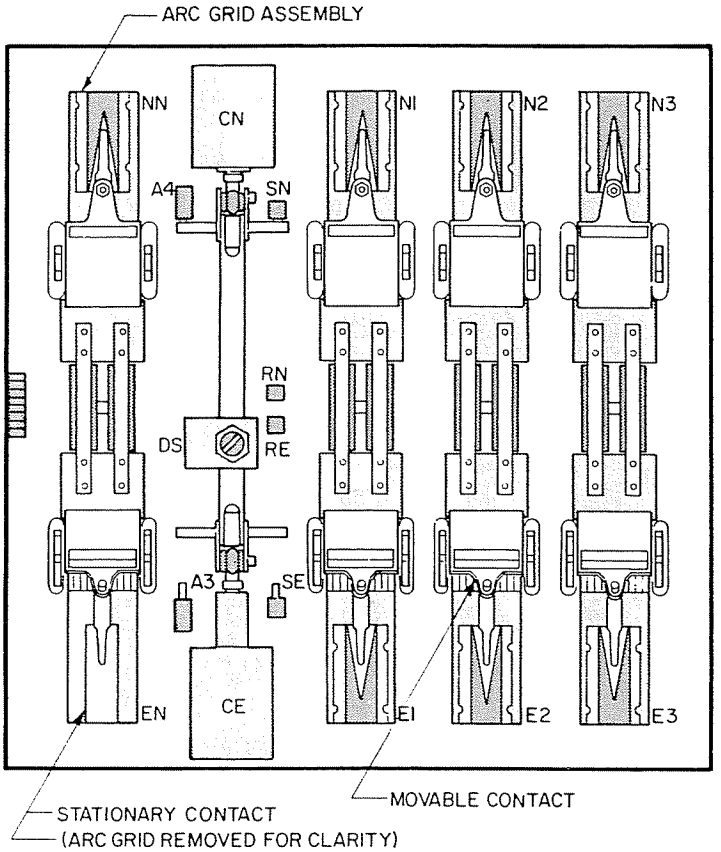

TAG	DESCRIPTION			STOCK NUMBER BY AMPERAGE		
				1600	2000	3000
N 1,2,3,N E 1,2,3,N	Cable Connection at Rear			S-1126F (2) Optional	S-1126F (2) Optional	S-1126F (2) Optional
T 1,2,3,N	Wire Size			(8) #2-600 MCM	(8) #2-600 MCM	(8) #2-600 MCM
	Stationary Contact Assembly Kit			23P-1594	23P-1594	23P-1619
	Arc Grid Assembly Kit			23P-1171	23P-1171	23P-1171
	Moveable Contact Assembly Kit			23P-1400	23P-1400	23P-1344
CN, CE	Main Operating Coils	Coil Volts	Poles			
		120	2	SPO	SPO	SPO
		240	2, 3	K-2123	K-2123	K-2123
			4	K-2127	K-2127	K-2127
		208	3	K-2125	K-2125	K-2125
			4	K-2128	K-2128	K-2128
		575/600	3	K-2153	K-2153	K-2153
			4	K-2154	K-2154	K-2154
		480	3	K-2120	K-2120	K-2120
			4	K-2130	K-2130	K-2130
		416	3	K-2126	K-2126	K-2126
SN	CN Cut-out Switch	23P-1352				
SE	CE Cut-out Switch	23P-1356				
A3	Emergency Position Aux Contact	(Qty. 1) 23P-1356 (Qty. 2) 23P-1357 (Qty. 3) 23P-1353 (Qty. 4) 23P-1355				
A4	Normal Position Aux Contact	(Qty. 1) 23P-1352 (Qty. 2) 23P-1353 (Qty. 3) 23P-1357 (Qty.4) 23P-1359				
DS	Disconnect Switch	Operator L-4009; Contact Block L-1020				
RN, RE	Rectifier	23P-1473 (Up to 240V); 23P-1582 (Up to 600V).				

5. POWER PANEL - 4000 AMPS

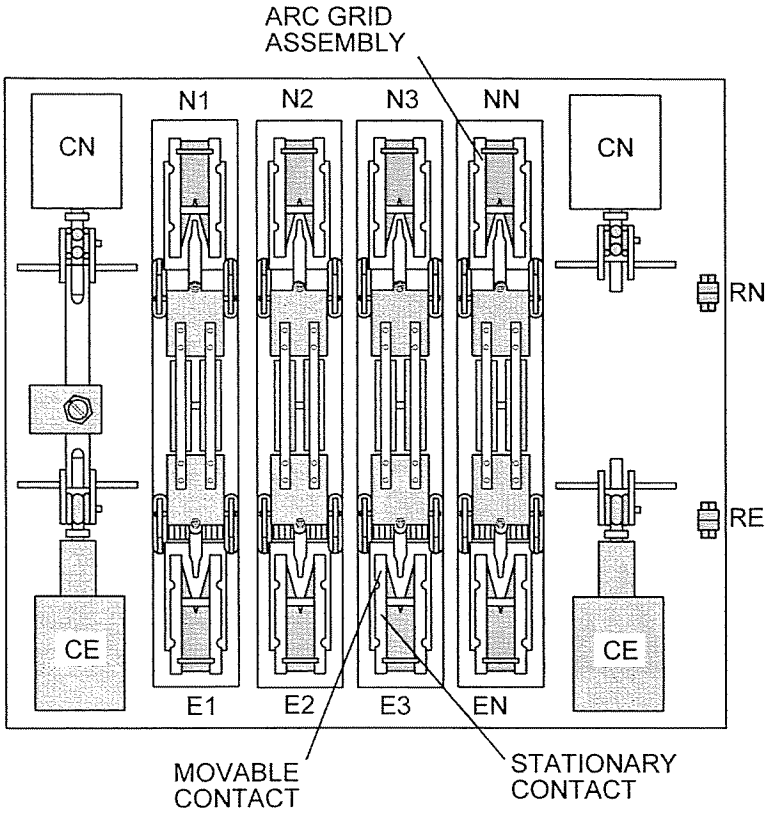

TAG	DESCRIPTION			STOCK NUMBERS
N 1,2,3, N E 1,2,3, N	Cable Connection Lug			S1511F (3) Optional
T 1,2,3, N	Wire Size			(12) #2-600 MCM
	Stationary Contact Assembly Kit			23P-1655
	Arc Grid Assembly Kit			23P-1171
	Movable Contact Assembly Kit			23P-1640
CN/CE	Main Operating Coils	Coil Volts	Poles	
		240	3	K-2219
			4	K-2219
		208	3	K-2226
			4	K-2226
		575/600	3	K-2221
			4	K-2221
		480	3	K-2218
			4	K-2218
		416	3	K-2220
SN	CCN Cut-out Switch		23P-1352	
SE	CCE Cut-out Switch		23P-1356	
A3	Emergency Position Aux Contact		(Qty 1) 23p-1356 (Qty 2) 23p-1357 (Qty 3) 23p-1353 (Qty 4) 23p-1355	
A4	Normal Position Aux Contact		(Qty 1) 23p-1352 (Qty 2) 23p-1353 (Qty 3) 23p-1357 (Qty 4) 23p-1359	
DS	Disconnect Switch		Operator L-4009; ; Contact Block L-1020	
RN, RE	Rectifier		23P-1473 (Up to 240V); 23P-1582 (Up to 600V)	

6. STANDARD CONTROL PANEL (SSRCP)

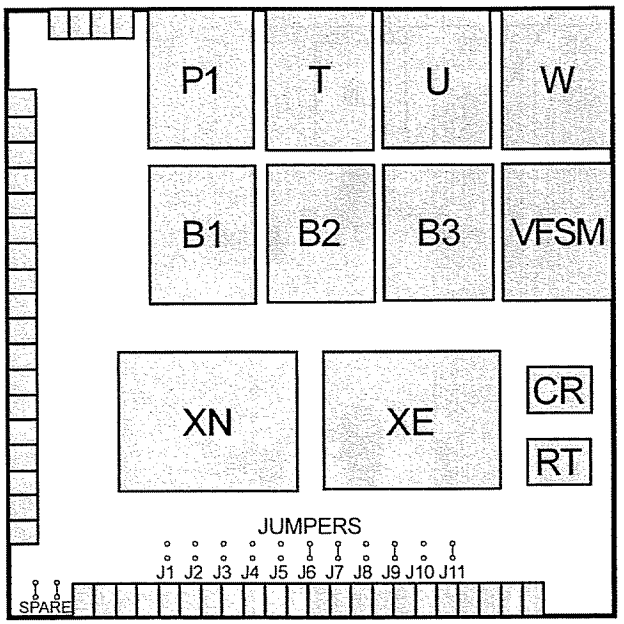

JUMPER	CONNECTS POINTS	REMOVE WHEN ACCESSORIES USED
J1	23, 23A	B1
J2	23A, 23B	B2
J3	23B, 23C	B3
J4	23C, 23Z	JIN, TS, C/D
J5	23Z, 27	T, YN
J6	25, 25Z	T3, R4
J7	28, 28Z	S1, C, C/D
J8	28Z, 29	P1 & U
J9	33A, 33Y	ER1, 2, 3, J1E
J10	33Z, 37	W
J11	35, 35Z	R4, W3

TAG	DESCRIPTION	VOLTAGE 50/60 HZ		PART NUMBER
XN, XE	Control Transformers (See Note 1)	120 V		K-3068
		208 V		K-3070
		240 or 480 V		K-3071
		416 V		K-3089
B 1, 2, 3	Phase Relays Solid State (See Note 1)	120 V		K-1185
		208 or 240 V		K-1186
		480 V		K-1188
VFSM	Voltage Frequency Sensor	120 V		K-1192
CR	Control Relay	120 V		K-1204
RT	Bypass T Relay	120 V		K-1204
CN1, CE1 or CCN, CCE	Transfer Relays (Mounted below SSRCP)	ZTSH 4-40, ZTSH 160-300	120 V	K-1120
		ZTSH 60-120	120 V	K-1095
T	Time Delay-to-Normal, Timer Solid State	0.1 sec. to 100 hours; adjustable	120 V	K-1230
U	Engine Cool Down, Timer Solid State	0.1 sec. to 100 hours; adjustable	120 V	K-1230
W	Time Delay Emergency, Timer Solid State	0.1 sec. to 100 hours; adjustable	120 V	K-1230
P1	Time Delay Engine Start Timer	0.5 sec. to 6 sec.; adjustable	120 V	K-1201
P2	Optional (Mounted below SSRCP)	0.5 sec. to 300 sec.; adjustable	120 V	K-1061
J1 - J11	Jumpers			PS-5067

NOTES: 1. If -6 voltage system (575/600V) is supplied, then XN, XE is K-3087 and B1, 2, 3 is K-1185 (120V) supplied with XB (575-600V/120V) 3 phase transformer assembly.

7. OPTIONAL CONTROL PANEL AND CABINET DOOR PILOT DEVICES

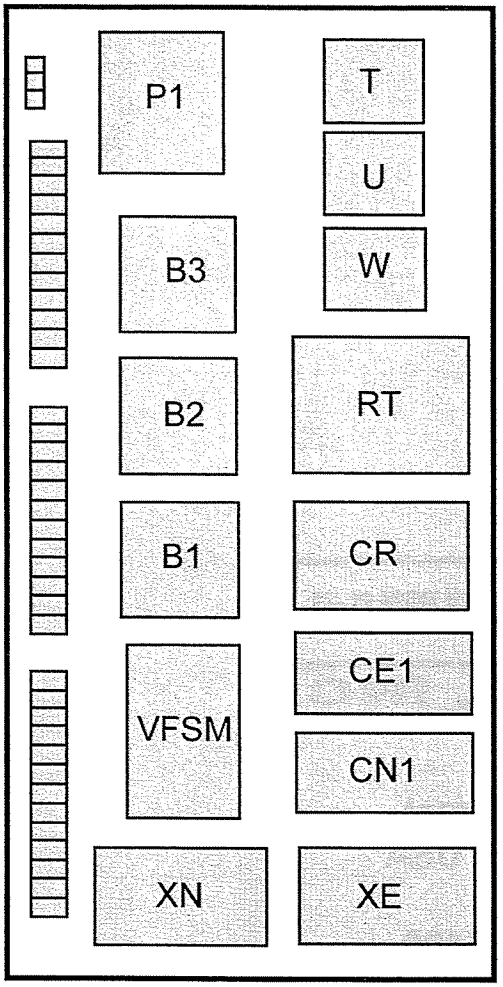

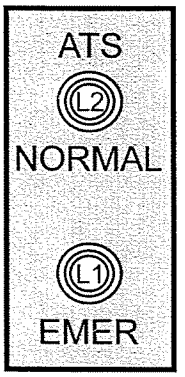

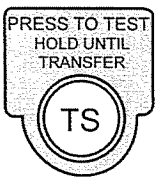

TAG	DESCRIPTION	PART NUMBER
L1	ATS Emergency Position Indicator	
L2	ATS Normal Position Indicator	
	Lens (Normal)	PS-5048 (Green)
	Lens (Emergency)	PS-5047 (Red)
	Bulb Socket	PS-5046 (Incandescent)
	Emergency Bulb	PS-5105 (Incandescent)
	Normal Bulb	PS-5105 (Incandescent)
TS	Test Switch	
	Operator, Momentary	L-1025
	Contact Block N.C.	L-1029
	Contact Mounting Base	PS-3473

TAG	DESCRIPTION	VOLTAGE 50/60 HZ		PART NUMBER
XN, XE	Control Transformers (See Note 1)	120 V		K-3068
		208 V		K-3053
		240 or 480 V		K-3041
		416 V		K-3055
B 1, 2, 3	Phase Relays Electro-Mechanical-Standard Solid State (See Note 1)	120 V		K-1055 (K-1185)
		208 or 240 V		K-1056 (K-1186)
		480 V		K-1058 (K-1188)
VFSM	Voltage Frequency Sensor	120 V		K-1192
CR	Control Relay	120 V		Y-260002
RT	Bypass T Relay	120 V		Y-260002
CN1, CE1 or CCN, CCE	Transfer Relays	ZTSH 4-40, ZTSH 160-300	120 V	K-1120
		ZTSH 60-120	120 V	K-1095
T	Time Delay-to-Normal, Timer Solid State	0.1 sec. to 100 hours; adjustable	120 V	K-1230
U	Engine Cool Down, Timer Solid State	0.1 sec. to 100 hours; adjustable	120 V	K-1230
W	Time Delay Emergency, Timer Solid State	0.1 sec. to 100 hours; adjustable	120 V	K-1230
P1	Time Delay Engine Start Timer	0.5 sec. to 6 sec.; adjustable	120 V	K-1201
P2	Optional	0.5 sec. to 300 sec.; adjustable	120 V	K-1061

NOTES: 1. If -6 voltage system (575/600V) is supplied, then XN, XE is K-3059 and B1, 2, 3 is K-1055 (120V) supplied with XB (575-600V/120V) 3 phase transformer assembly.

Rev. 7/97

ZENITH®
CONTROLS, INC.

830 West 40th Street
Chicago, IL 60609 USA

Phone: 773 247-6400
Fax: 773 247-7805

www.zenithcontrols.com
E-Mail: zenith@zenithcontrols.com

© 1999 Zenith Controls, Inc.

GE Zenith Controls

ZTX Series Transfer Switches
40-400 Amps

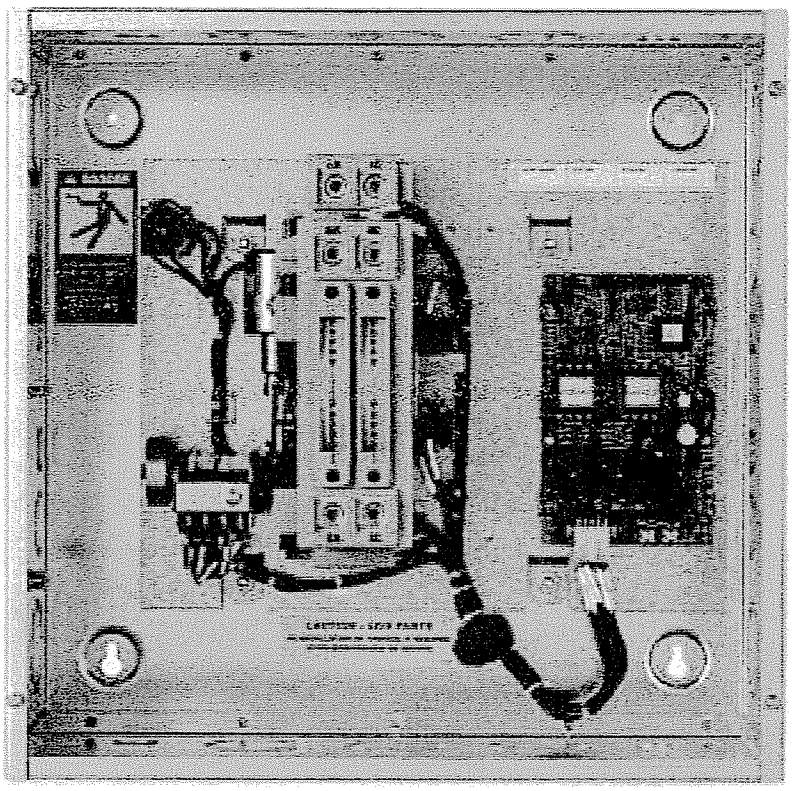

62R-2000D
12/03

Operation and Maintenance Manual

Authorized Service

For GE parts and service, call: 773 299-6600

Table of Contents

	Page
Introduction	ii
How to Remove the Cover	1
Installation	2
Equipment Inspection and Storage	2
Final Equipment Inspection	2
Mounting	2
Power Connections	3
Engine Start Control Connections	4
RM4 Exerciser Option	5
Functional Test	6
RMF Control Interface	7
Optional Indicator LED's	7
Optional Pushbuttons	7
Automatic Transfer Generator Testing	8
Transfer Generator Testing	8
LED Diagnostic Flash Codes	8
Automtic Generator Exerciser	9
Selecting Exercisor without Transfer	9
Selecting Exercisor with Transfer	9
Engine Controller Accesoory Board	10
Example Systems	11
Partial Coverage Systems	11
Total Coverage Systems	11
Typical Diagrams	12
Power Circuit Schematic	12
Power Panel Layout	12
Interconnect Plug	12
Troubleshooting	13
General Troubleshooting	13, 14

Introduction

GE Zenith Transfer Switches are used to provide a continuous source of power for lighting and other critical loads by automatically transferring from the normal source of power to an emergency source of power in the event that the normal source voltage falls below preset limits.

Voltage sensing and system control is performed via a state-of-the-art microcontroller located on the cabinet door. It is designed to give highly accurate control of the transfer switch system.

All GE Zenith transfer switches are designed for use on emergency or standby systems, and are rated for total system or motor loads. Transfer switches are UL Listed under Standard 1008 and CSA Certified under Standard C22.2 No. 178 and IEC Listed under Standard 947.

NOTE: A protective device such as a molded care circuit breaker or fused disconnect switch MUST be installed on both sources of incoming power for circuit potection and as a disconnection device.

How to Remove the Cover

Loosen but do not remove four cover screws. Lift cover off the four screws and hang on two screws (2 bottom or 2 right-hand). See *Figure i* and *ii*.

This will prevent damage to the cable. The cable may also be disconnected at the controller or keypad.

NOTE: Reattach cable before installing cover.

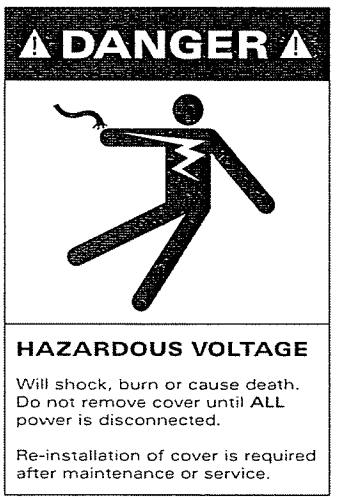

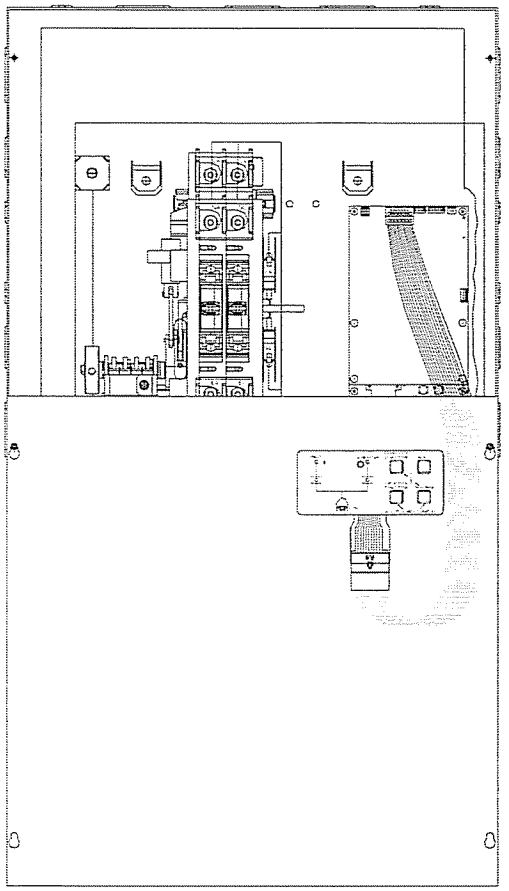

Figure i

FRONT VIEW
W/COVER ON BOTTOM

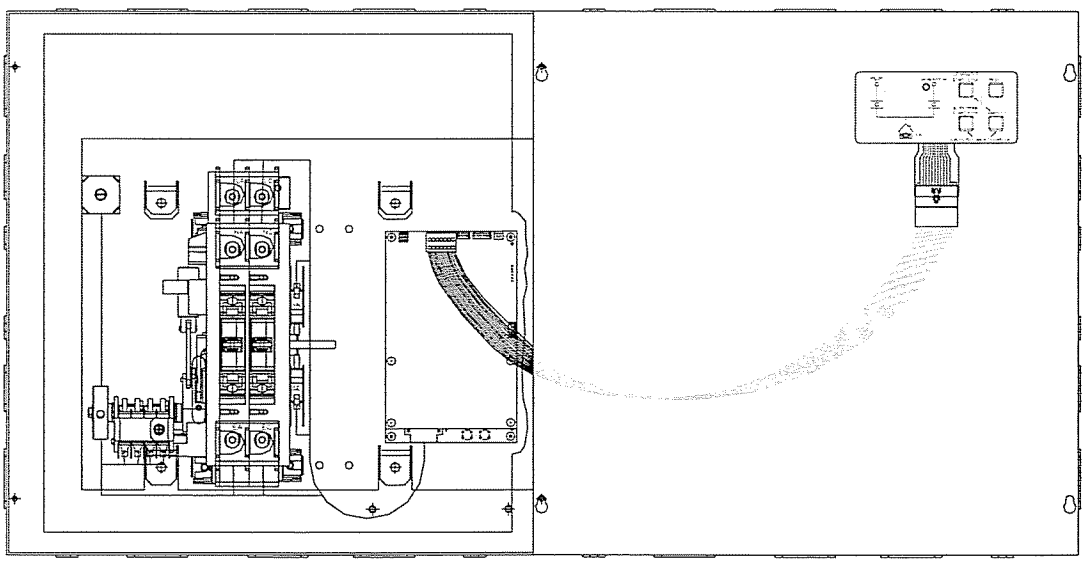

Figure ii

FRONT VIEW
W/COVER TO THE RIGHT

Katolight Service - Master Repair Manual - Page 4607

Installation

⚠ DANGER ⚠

HAZARDOUS VOLTAGE
(Can Cause Severe Injury or Death)

Turn OFF all power before installation, adjustment, or removal of transfer switch or any of its components.

The safe operation of your switch is GE Zenith's focus. The proper storage, installation, operation and maintenance will help increase the life of the switch.

⚠ CAUTION ⚠

Due to hazardous voltage and current, GE Zenith recommends that a GE Zenith Certified technician or a qualified electrician must perform the installation and maintenance of the switch.

Equipment Inspection and Storage

Once you have received the transfer switch, inspect it for any damage. This includes damage to the enclosure, power panel, control panel and wiring harness. If any damage is found or suspected, file a claim as soon as possible with the carrier and notify the nearest GE Zenith representative.

Before installation, it is necessary to store the transfer switch in a clean dry place, protected from dirt and water. Provide ample air circulation and heat, if necessary, to prevent condensation.

Storage Temperature	Operating Temperature (Ambient):	Humidity
-30°C to +75°C (-22°F to +167°F)	-20°C to +65°C (-4°F to +149°F)	5% to 95% (non-condensing)

Final Equipment Inspection

Prior to energizing the transfer switch:

1. Remove any debris incurred, with a vacuum, due to shipment or installation.

⚠ WARNING ⚠

Do not use a blower since debris may become lodged in the electrical and mechanical components and cause damage.

2. Verify that all cabled connections are correct.
3. Check engine start connections and verify the correct connection of all control wires.
4. Check the lug torque values of the power connections.

NOTE: Lug torque values are specified in the power panel manual.

5. Make sure that all covers and barriers are installed and properly fastened.

NOTE: Power panels ship from GE Zenith in the Normal Position.

Each GE Zenith transfer switch is factory wired and tested. A complete information package is furnished with each switch which includes:

a. Sequence of operation.
b. Description and operation of all accessories supplied.
c. Power panel connection diagram and schematic.
d. Description and identification of all customer field connections.

Installation of GE Zenith transfer switches includes:

a. Mounting the transfer switch cabinet.
b. Connection of all Normal, Emergency, and Load cables or bus bars.
c. Connection of external control circuits as required.

Mounting

Adequate lifting means must be used to mount the transfer switch into place. The recommended method for moving the transfer switch using the lifting eyes, where supplied, and a spreader bar is illustrated here. Enough room should be allowed to open the cabinet doors fully for inspection and servicing of the switch per NEC and local codes.

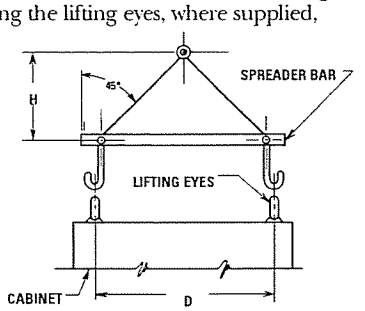

NOTE: When lifting the switch using a spreader bar, height H must be equal to half of distance D.

⚠ CAUTION ⚠

Before drilling conduit entry holes or any accessory mounting holes, cover and protect the switch and control panel to prevent dirt and metal fragments from entering the mechanical and electrical components.

Failure to do so may result in damage and malfunction of the switch.

Katolight Service - Master Repair Manual - Page 4608

⚠ DANGER ⚠

HAZARDOUS VOLTAGE
(Can Cause Severe Injury or Death)

Turn OFF all power before installation, adjustment, or removal of transfer switch or any of its components.

Power Connections

GE Zenith transfer switches are supplied with UL listed solderless screw type terminals as standard for the Normal, Emergency and Load power connections. *Table 1* lists the number and sizes of cable lugs supplied as standard for each switch amp rating.

Connect the Normal, Emergency, and Load conductors to the clearly marked terminals on the transfer switch. Remove surface oxides from cables by cleaning with a wire brush. Verify that all connections are correct before tightening the lugs. All cable lug connections must be tightened to the proper torque values as shown in *Table 2*.

NOTE: Do not run cables or wiring behind front-connected transfer switches.

Screw Type Terminals for External Power Connections

Switch Size (Amps)	*Utility, Generator and Load Terminals*		*Fully Rated Neutral Bar (When Required)*	
	Cable Per Pole	*Range of Wire Sizes*	*No. of Cables*	*Range of Wire Sizes*
40	1	#8 to 3/0 AWG	3	#8 to 1/0 AWG
80	1	#8 to 3/0 AWG	3	#8 to 1/0 AWG
100	1	#8 to 3/0 AWG	3	#8 to 1/0 AWG
150	1	#8 to 3/0 AWG	3	#8 AWG to 300 MCM
200, 225, 250*	1	#6 AWG to 250 MCM	3	#6 AWG to 300 MCM
300, 400	1	#4 AWG to 600 MCM	3	#4 AWG to 300 MCM

Table 1

* IEC Rating Only

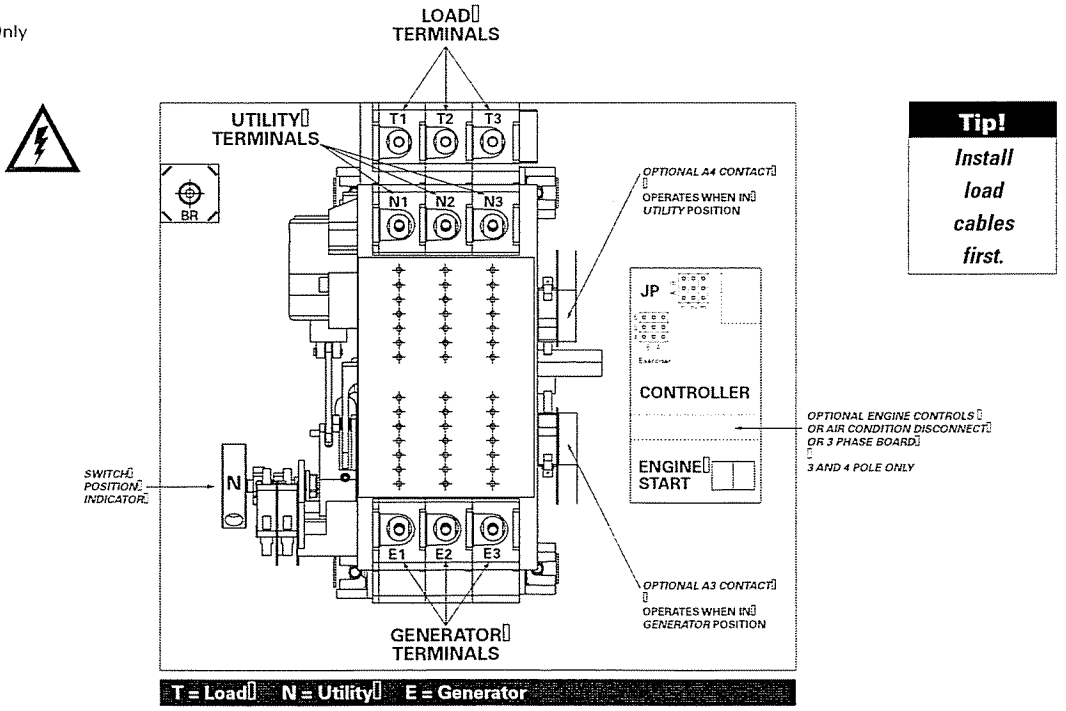

Figure 2 - Power Panel

Tip!

Install load cables first.

Katolight Service - Master Repair Manual - Page 4609

⚠ DANGER ⚠

HAZARDOUS VOLTAGE
(Can Cause Severe Injury or Death)

Turn OFF all power before installation, adjustment, or removal of transfer switch or any of its components.

Control Connections

Connecting Engine Start may cause Generator to start. Before connecting, turn Generator OFF.

With the Generator breaker open and the Generator control switch off, install the Generator start connections.

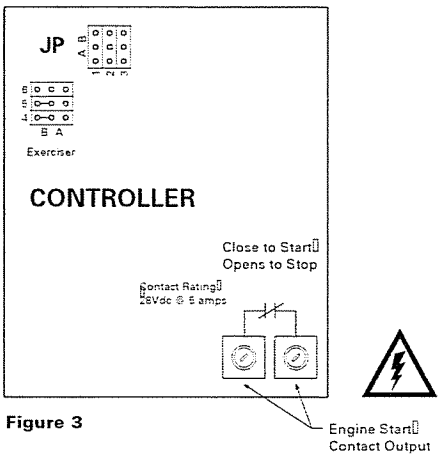

Figure 3

The engine-start terminals are clearly identified by a label on the microcontroller backplate. In the case of manual transfer switches, or in other applications not requiring the microprocessor, clearly marked terminal blocks are provided in the upper left corner of the control panel for the engine start control wires.

Terminals for field connections to the A3 Emergency auxiliary contacts and the A4 Normal auxiliary contacts are also provided. These terminals are clearly marked and appear on the side of the power panel. On 400 amp metal frame units these terminals appear on the bracket above the operator handle.

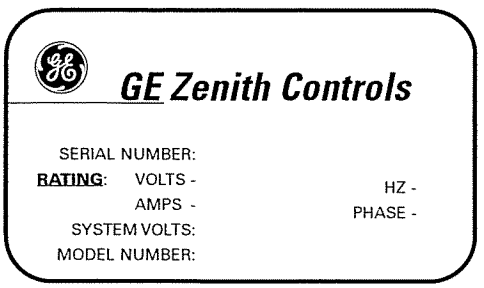

Figure 3

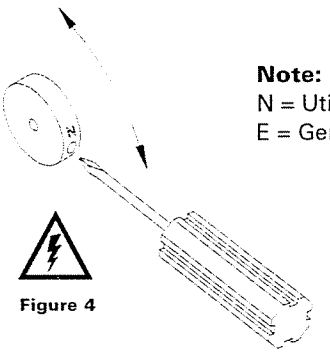

Figure 4

Note:
N = Utility Position
E = Generator Position

Manual operation is possible for maintenance purposes only. Manual operation of the switch can be checked before it is operated electrically.

With all power off, insert a Phillips screwdriver or equivalent size tool into the manual operator socket and operate the transfer switch between the Utility and Generator positions. The transfer switch should operate smoothly without binding. Return the switch to the Utility position, remove the screwdriver.

Tightening Torque for Lugs

Socket Size Across Flats	Torque	
	Lb. - In.	Lb. - Ft.
1/8	45	4
5/32	100	8
3/16	120	10
7/32	150	12
1/4	200	17
5/16	275	23
3/8	375	31
1/2	500	42
9/16	600	50

Table 2

Katolight Service - Master Repair Manual - Page 4610

⚠ DANGER ⚠

HAZARDOUS VOLTAGE
(Can Cause Severe Injury or Death)

Turn OFF all power before installation, adjustment, or removal of transfer switch or any of its components.

ATTENTION!

This applies only to the switches with the RM4-CAT exerciser option:

Upon installation, connect the MX50/90 controller to a 9V battery (not supplied) via the harness that is connected to the controller. The battery should be placed in the holder installed just above the controller. This is to ensure that the setting in the exercisor clock are retained in the event of power outage. The battery should be replaced once a year. If the battery is not installed and/or replaced as recommended, the exerciser clock will lose its settings and the exerciser will not work.

Should the harness become disconnected in shipping, take the controller cover off and plug the harness in the receptacle in the top right corner of the MX controller. Reinstall the cover and connect the battery.

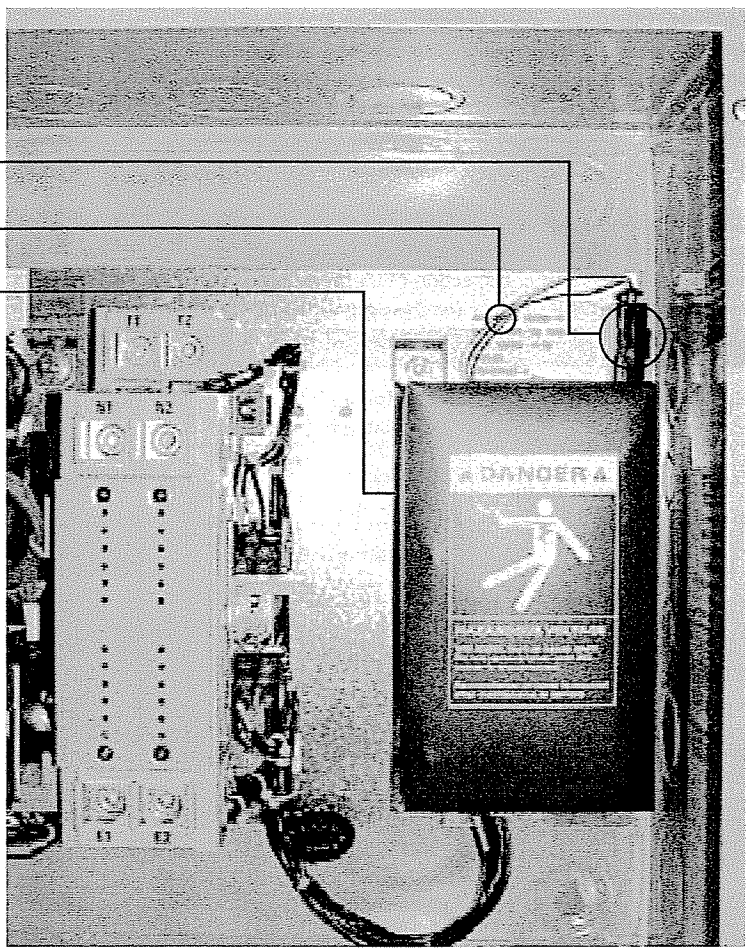

Katolight Service - Master Repair Manual - Page 4611

⚠ DANGER ⚠

HAZARDOUS VOLTAGE
(Can Cause Severe Injury or Death)

Turn OFF all power before installation, adjustment, or removal of transfer switch or any of its components.

Functional Test

The functional testing of the transfer switch consists of electrical tests described in this section. Before proceeding, read and understand all instructions and review the operation of all accessories provided.

To begin the test, close the Utility source circuit breaker. **The controller will illuminate the optional Utility Available LED when proper voltage is sensed.** Verify the phase to phase voltages at the Utility line terminals.

Next, close the Generator source breaker and start the engine generator. **The optional Generator Available LED will illuminate when proper voltage and frequency levels is sensed. If Generator LED is flashing, use the Reset button to clear.** Check the phase to phase voltages at the Generator line terminals. On three phase units, verify that the phase rotation of the Generator source is same as Utility source.

After the sources have been verified, shut down the engine generator, and put the starting control in the automatic position. Complete the visual inspection of the transfer switch, and replace the cabinet cover **(or close the cabinet door).**

Initiate the electrical transfer test by opening the Utility side breaker. The delay to engine start timer (P) begins its timing cycle. After the P timer has completed its timing cycle, the engine start contacts close to start the generator.

When Generator voltage and frequency reach preset pickup points **the optional Generator Available LED illuminates.** Simultaneously, the delay to Generator timer (W) begins its timing cycle. When the W time delay is completed the switch will transfer to Generator. **The optional Utility Position LED goes off, and the optional Generator Position LED illuminates.**

Reclose the Utility breaker to retransfer to Utility. The delay to Utility timer (T) begins its timing cycle. When the T timer has completed its timing cycle, the switch will transfer into Utility. **The optional Generator Position LEDs go off, and the Utility Position LED illuminates.** The delay engine stop timer (U) begins its timing cycle. The generator runs unloaded for the duration of the U timing cycle. When the timer completes its timing cycle, the generator will stop. **The optional Generator Available LED goes off.**

Factory Settings	
Utility Pickup Voltage	90% Nominal Line Voltage
Utility Dropout Voltage	80% Nominal Line Voltage
Utility Pickup Frequency	90% Nominal Line Frequency
(T) Timer/Delay to Utility	5 minutes*
(U) Timer/Engine Cool Down	5 minutes*

Factory Settings	
Generator Pickup Voltage	90% Nominal Line Voltage
Generator Dropout Voltage	80% Nominal Line Voltage
Generator Pickup Frequency	95% Nominal Line Frequency
(P) Timer/Engine Start	5 seconds*
(W) Timer/Delay to Generator	20 seconds*

Table 3

* Factory default settings — customer time settings may vary due to specifications from the generator supplier.

Katolight Service - Master Repair Manual - Page 4612

RM4 Control Interface (*Optional*)

⚠ DANGER ⚠

HAZARDOUS VOLTAGE
(Can Cause Severe Injury or Death)

Turn OFF all power before installation, adjustment, or removal of transfer switch or any of its components.

Optional Indicator LEDs

A Utility available Green LED. When on, indicates the utility source is acceptable.

B Utility position Green LED. When on, indicates that the transfer switch is connected to the utility.

C Generator available Red LED. When on, indicates the generator source is acceptable.

D Generator position Red LED. When on, indicates that the transfer switch is connected to the generator.

E Load Amber LED. When on, indicates that the load is connected to an acceptable source.

Special Note:

A C Phase rotation must always be "ABC". If the phase rotation is not "ABC", indicator LED's "A" and "C" will flash.

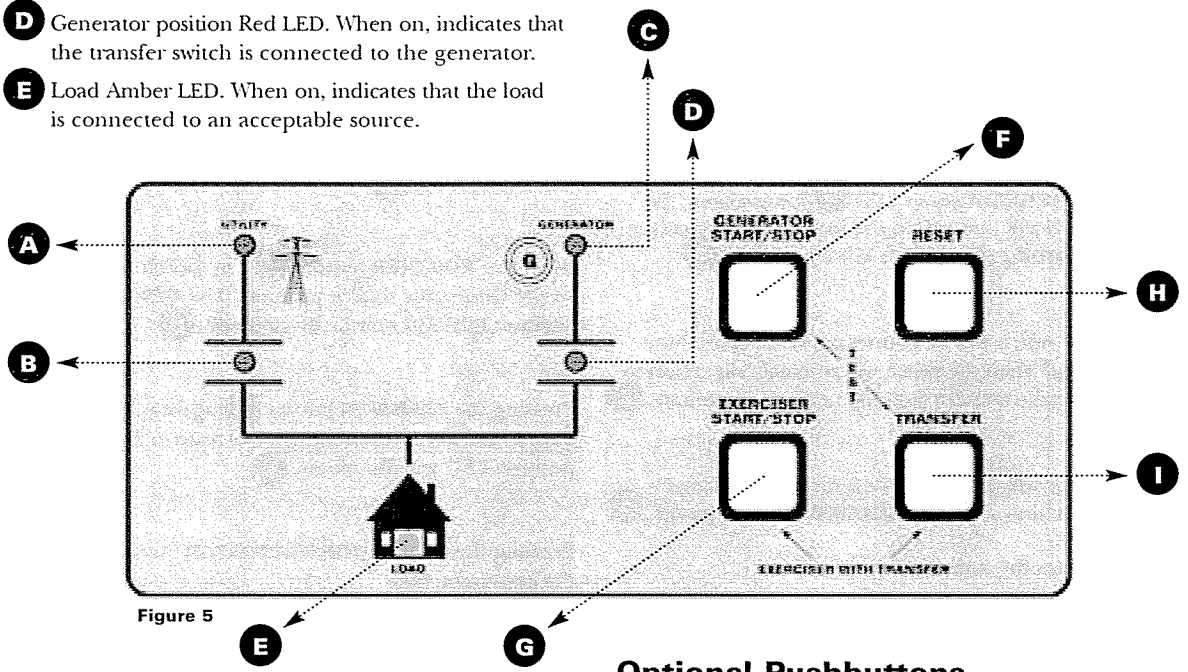

Figure 5

Special Note:

B D Rapid flashing of position LED's "B" and "D" indicates that the switch did not transfer upon command from the MX50 microprocessor. To correct the problem, check the coil (solenoid), diode, SN/SE contacts or connections in the harness.

Optional Pushbuttons

F Generator Start/Stop push button. Pressing and holding this button for approximately 5 seconds will cause the generator to start. Pressing this button a second time will stop the generator.

G Exerciser Start/Stop push button. When this button is depressed it will enable the automatic exerciser mode. Pressing this button a second time will cancel the automatic exerciser mode.

H Reset push button. Pressing this button will clear the fault indications.

I Transfer push button. Pressing this button will force the unit to transfer from one position to another when both sources are available.

Katolight Service - Master Repair Manual - Page 4613

RM4 Control Interface (Optional) (cont'd)

⚠ DANGER ⚠

HAZARDOUS VOLTAGE
(Can Cause Severe Injury or Death)

Turn OFF all power before installation, adjustment, or removal of transfer switch or any of its components.

Automatic Transfer Generator Testing (One Time Test)

Verify that the transfer switch **UTILITY** available and position LEDs are illuminated. (A) + (B)

Press and hold the **GENERATOR START/STOP** button (F) and the **TRANSFER** button (I) for 5 seconds. This will cause the generator to start. Once the generator (C) has started, the Generator LED will illuminate.

Once the **GENERATOR** power LED (C) has come on, the transfer switch will now switch the load to the Generator. The **GENERATOR** position LED will illuminate. (D)

The transfer switch will be connected to the generator for 5 minutes.* Then the switch will automatically return to the utility and the **UTILITY** Position LED will illuminate. (B)

The generator will cool down for 5 minutes (U Timer) and then shut down. The **GENERATOR** LED will go off. (C)

This completes the automatic test.

* Pressing and releasing the generator Start/Stop button will cancel current test.

Transfer Generator Testing (Forcing Operation with Keypad)

Verify that the transfer switch **UTILITY** available and position LEDs are illuminated. (A) + (B)

Press and hold the **GENERATOR START/STOP** button for 5 seconds. This will start the generator. (F)

Verify that the **GENERATOR** available LED has illuminated. (C)

Press the **TRANSFER** button. (I) The switch will transfer to the Generator source position. The **GENERATOR** position LED will now be illuminated. (D)

Pressing the **TRANSFER** button (I) again will cause the unit to transfer to the utility power source. The **UTILITY** position LED will illuminate. (B)

Pressing the **GENERATOR START/STOP** button will stop the generator. (F)

NOTE: Transfer will cause short interruption of power.

LED Diagnostic Flash Codes

Rapidly Flashing Generator Availability LED (C)

- Generator failed to start.
- Generator starts but failed to reach proper operating parameters.
- Generator became over loaded for an extended period of time.
- Optional generator crank board *(see generator fault flash table on page 14)*

Rapidly Flashing Generator (D) Position LED

- Switch did not transfer to Generator position.

Rapidly Flashing Utility (B) Position LED

- Switch did not transfer to Utility position.

NOTE: All fault alarms can be cleared by depressing the reset button.

Katolight Service - Master Repair Manual - Page 4614

⚠ DANGER ⚠

HAZARDOUS VOLTAGE
(Can Cause Severe Injury or Death)

Turn OFF all power before installation, adjustment, or removal of transfer switch or any of its components.

Automatic Generator Exerciser

The automatic generator exerciser comes preset with a 28-day exerciser schedule *(the customer unit's preset day cycle may vary due to specifications from the generator supplier).* The exerciser, when enabled, will automatically start the generator every twenty-eighth day and run the unit loaded or unloaded for 10 minutes. The exerciser interval is selectable through (JP) jumper selection on the controller board. The selections are 7, 14, 21 or 28 day.

Selecting Exerciser Without Transfer

To start the automatic exerciser without transfer, depress the Exerciser Start/Stop button. The generator will start and run for 10 minutes.* Once this first exercise is complete, the generator LED will flash at a 1-second interval indicating the exerciser is enabled. Once the exerciser times out (7, 14, 21 or 28 day interval), the generator will start and run again for 10 minutes. This will repeat until the exerciser is disabled. To stop the exerciser mode, depress the exerciser Start/Stop again and the generator light will stop flashing, indicating the exerciser mode has been canceled.

Selecting Exerciser With Transfer

To enable the automatic exerciser with transfer, depress the Exerciser Start/Stop button and the transfer button. The generator will start and the load will be transferred to the generator. After 10 minutes,* the load will be transferred back to the utility. Once this first exercise is complete, the generator LED and the Generator position LED will flash at a 1-second interval indicating the exerciser is enabled. Once the exerciser has timed out (7, 14, 21 or 28 day interval), the generator will start and transfer the load to Generator power for 10 minutes. At the end of this 10-minute period, the unit will transfer the load back to the utility and the generator will shut off. This will repeat until the exerciser is disabled. To stop the exerciser mode, depress the exerciser Start/Stop again and the generator light will stop flashing, indicating the exerciser mode has been canceled.

* Pressing and releasing the generator Start/Stop button will cancel the current test. The exerciser will go off at approximately the same time it was started (7, 14, 21 or 28 days) later.

NOTE: Transfer will cause short interruption of power.

⚠ DANGER ⚠

Turn OFF all power before selecting.

JP (CDT SELECT)

See Figure 3, Page 4

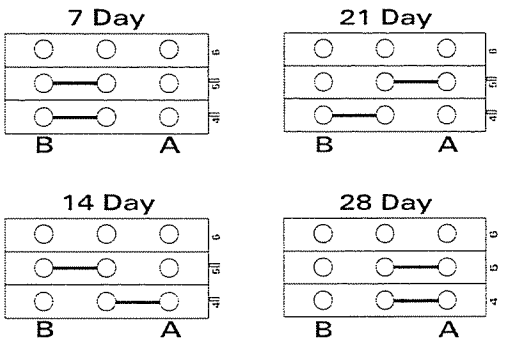

JP (VOLTAGE/FREQUENCY SELECT)

See Figure 3, Page 4

Do not adjust the jumper positions.
This service to be performed by qualified personnel only.

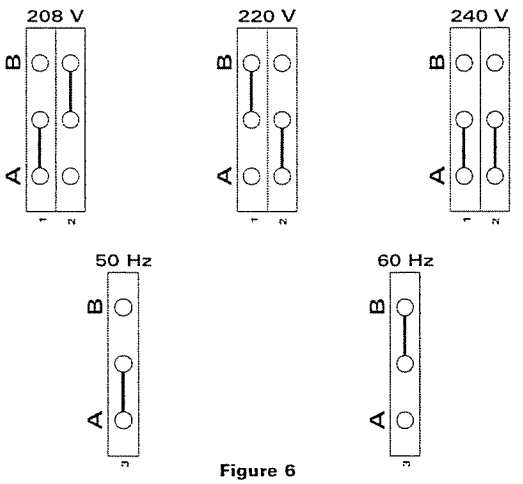

Figure 6

Katolight Service - Master Repair Manual - Page 4615

Engine Controller Accessory Board *(Optional)*

Oil Pressure Sensor Input

(Oil pressure contact to be normally open, held closed by adequate oil pressure)

Approximately five seconds after emngine starter signal is sent, if terminal X3 is open to ground or returns to open state thereafter the generator Starter and Fuel/Run outputs are opened and locked out. After cause is determined and corrective action is taken and verified by qualified technician, controller can be reset via reset button.

Temperature Sensor Input

(Temperature sensor contact to be normally open, closed by over-temperature condition)

Approximately five seconds after the engine starter signal is sent, if terminal X1 is connected to ground Starter and Fuel/Run outputs are opened and locked out. After cause is determined and corrective action is taken and verified by a qualified technician, the controller can be reset via the reset button.

Fuel/Run Contact Output

This output is activated closed whenever the engine is running. This will keep the fuel valve open as needed, and will cut fuel supply during the above mentioned lockouts or when the engine is no longer called to run.

Start Contact Output

This output is activated closed during cranking of the engine. Output will deactivate once the controller senses that the generator output has reached 33% of frequency indicating engine has reached running RPM.

Generator Battery Input

This input is required to support the controller's operation.

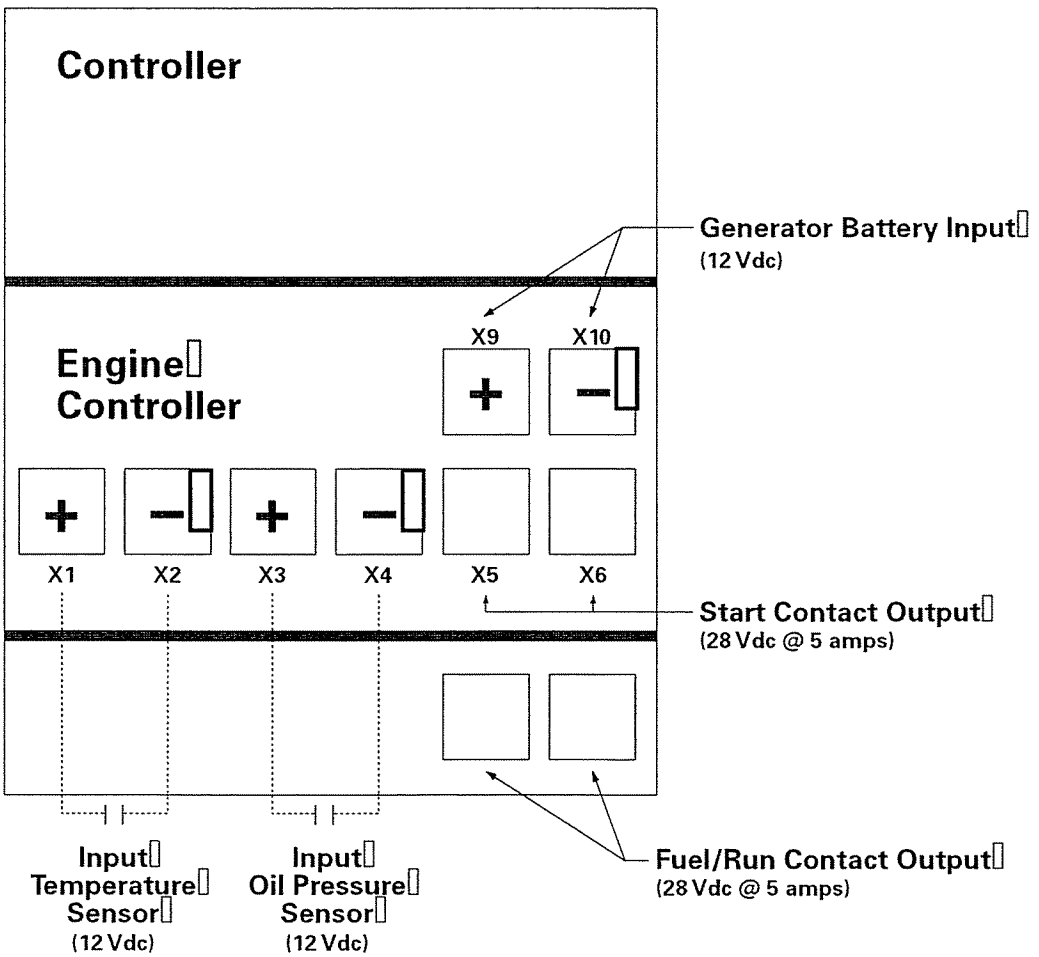

Katolight Service - Master Repair Manual - Page 4616

Partial Coverage System

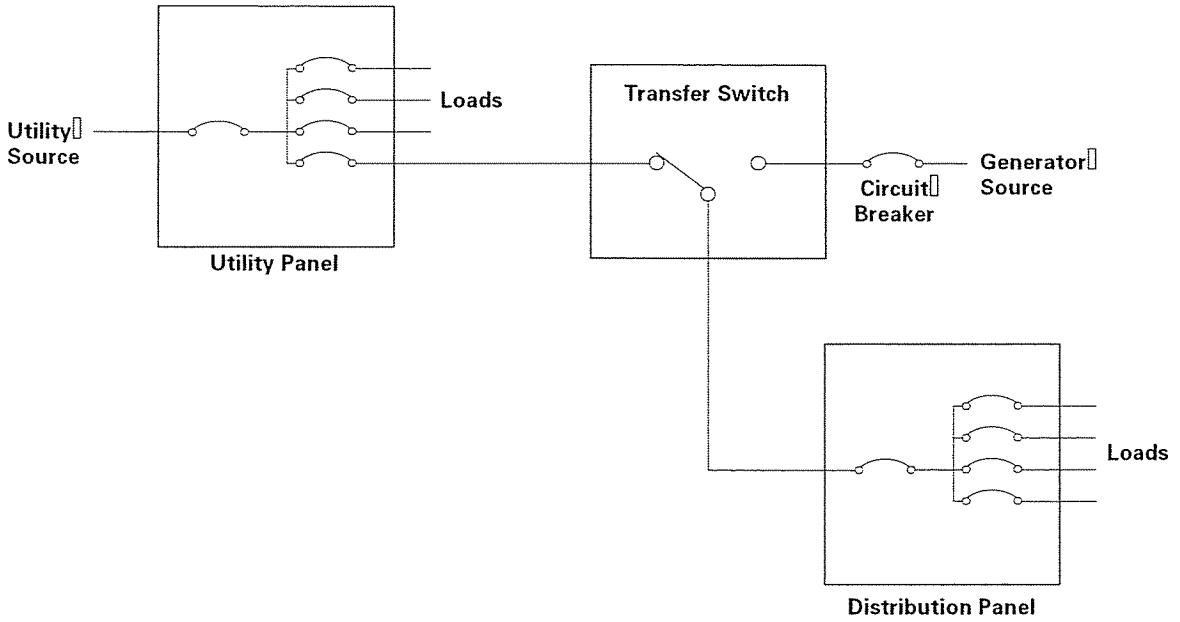

Total Coverage System

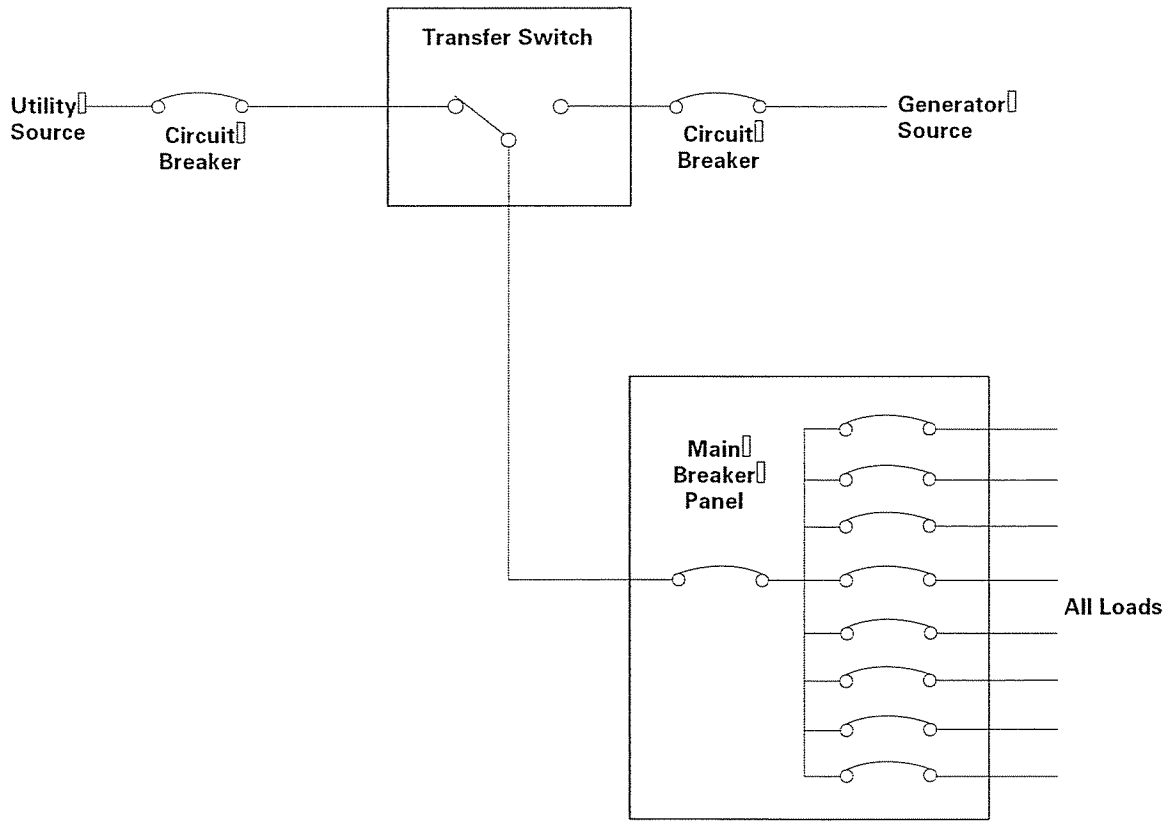

Katolight Service - Master Repair Manual - Page 4617

Typical Diagrams

Power Circuit Schematic

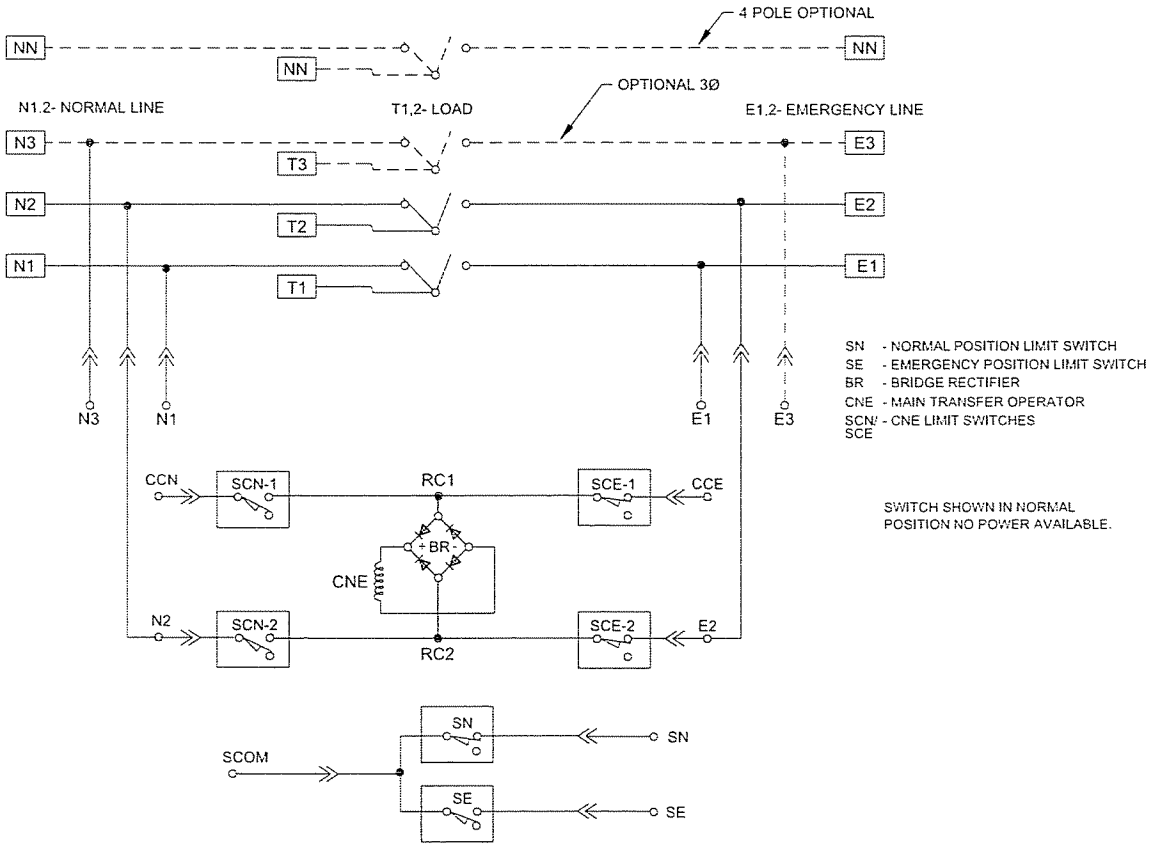

Power Panel Layout

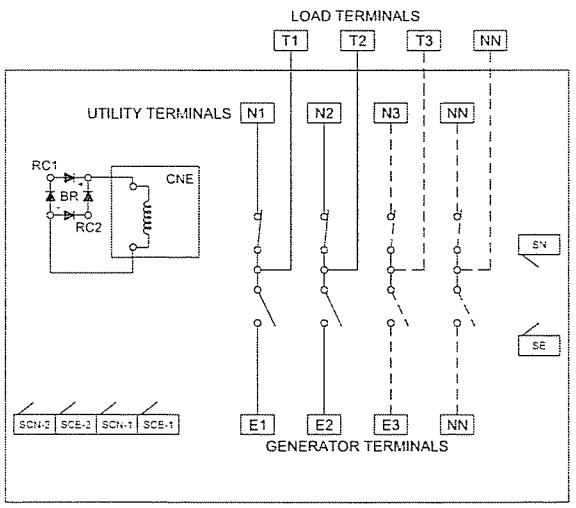

Interconnect Plug

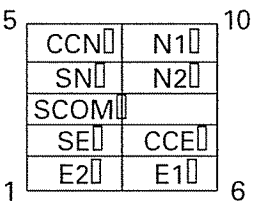

OPTIONAL 3Ø

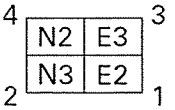

Katolight Service - Master Repair Manual - Page 4618

Troubleshooting

⚠ DANGER ⚠

HAZARDOUS VOLTAGE
(Can Cause Severe Injury or Death)

Turn OFF all power before installation, adjustment, or removal of transfer switch or any of its components.

Service must be performed by qualified personnel.

Symptom	Possible Cause	Corrective Action
Generator will not start	**P** timer has not lapsed	See factory settings on Page 6
	Generator control switch not in Auto	Refer to generator instruction manual
	Engine Start contact not wired to generator	See Figure 3, Page 4
	Starter battery is dead	Refer to generator instruction manual
	No fuel	Refer to generator instruction manual
Transfer switch does not transfer to Utility	**T** timer has not lapsed	See factory settings on Page 6
	Exercise in progress	See Page 9
	Utility breaker open or tripped	Clear fault and reset
	Utility voltage out of range	Wait for utility to return to acceptable level. See factory settings on Page 6.
	Control harness unplugged	With all power disconnected, reconnect harness
Transfer switch does not transfer to Generator	**W** timer has not lapsed	See factory settings on Page 6
	Generator breaker open or tripped	Refer to generator instruction manual
	Generator voltage out of range	Refer to generator instruction manual
	Control harness unplugged	With all power disconnected, reconnect harness
Generator will not stop	**U** timer has not lapsed	See factory settings on Page 6
	Exercise in progress	See page 9
	Engine control switch in run position	Refer to generator instruction manual
All LEDs off	Keypad cable unplugged	With all power disconnected, reconnect harness
	Sources unavailable and/or source breakers tripped or open	Clear fault and reset breakers and/or check source availability

Katolight Service - Master Repair Manual - Page 4619

⚠ DANGER ⚠

HAZARDOUS VOLTAGE
(Can Cause Severe Injury or Death)

Turn OFF all power before installation, adjustment, or removal of transfer switch or any of its components.

Service must be performed by qualified personnel.

Generator Fault Flash Table	
Generator Failed to Start (GFS Timeout)	2 Flashes + 2 Missing
Generator Under-Speed Fault	3 Flashes + 2 Missing
Generator Over-Speed Fault	4 Flashes + 2 Missing
Generator Over-Temperature Fault	5 Flashes + 2 Missing
Generator Low-Oil-Pressure Fault	6 Flashes + 2 Missing

NOTE: Faults that trigger the "original" SAG timer (emergency source not available for longer than the GS timer interval) will continue to be indicated on the "Emergency Source" LED at the original continuous 5 Hz rate.

Katolight Service - Master Repair Manual - Page 4620

Katolight Service - Master Repair Manual - Page 4621



GE Zenith Controls

A Product of GE Consumer & Industrial
General Electric Company
830 West 40th Street, Chicago, IL 60609 USA
773 299-6600, Fax: 773 247-7805
www.geindustrial.com

Katolight Automatic Transfer Switches Exercise Clocks

The Zenith model MX 100 controller C/D (standard) exerciser clock is not as accurate as some customers would like. This clock can be off by no more than +/-26 min per year but it is still considered good.

Zenith does however offer external exercise clocks that have a tolerance of +/-4 min per year:
These models would be the Zenith MX150, MX 200 and MX250 controllers. All three of these models should hold fairly accurate time each week to the display clock on the controller.

The ASCO model A300 controllers standard exercise clock is accurate to +/-30 min.

Katolight part # 34053 is an exercise clock that has a tolerance of +/-4 min per year. This model can be added to the MX100 or to the A300 for more accuracy.