LEROY SOMER®

4455 en - 2011.02 / b

This manual is to be given to the end user

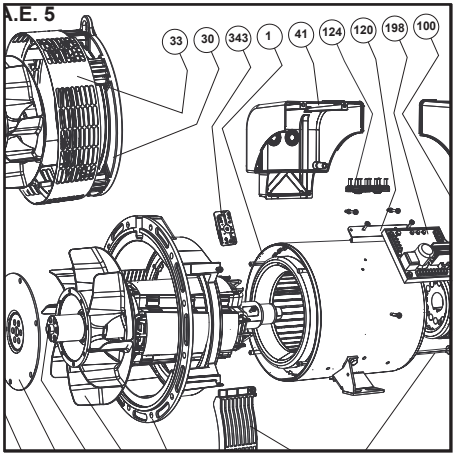

LSA 40 - 4 POLES

ALTERNATORS

Installation and maintenance

LSA 40 - 4 POLES
ALTERNATORS

This manual concerns the alternator which you have just purchased.

We wish to draw your attention to the contents of this maintenance manual.

SAFETY MEASURES

Before using your machine for the first time, it is important to read the whole of this installation and maintenance manual.

All necessary operations and interventions on this machine must be performed by a qualified technician.

Our technical support service will be pleased to provide any additional information you may require.

The various operations described in this manual are accompanied by recommendations or symbols to alert the user to the potential risk of accidents. It is vital that you understand and take notice of the different warning symbols used.

WARNING

Warning symbol for an operation capable of damaging or destroying the machine or surrounding equipment.

Warning symbol for general danger to personnel.

Warning symbol for electrical danger to personnel.

WARNING SYMBOLS

We wish to draw your attention to the following 2 safety measures which must be complied with:

a) During operation, do not allow anyone to stand in front of the air outlet guards, in case anything is ejected from them.

b) Do not allow children younger than 14 to go near the air outlet guards.

A set of self-adhesive stickers depicting the various warning symbols is included with this maintenance manual. They should be positioned as shown in the drawing below once the machine has been fully installed.

WARNING
The alternators must not be put into service until the machines in which they are to be incorporated have been declared compliant with Directives EC and plus any other directives that may be applicable.

Note: LEROY-SOMER reserves the right to modify the characteristics of its products at any time in order to incorporate the latest technological developments. The information contained in this document may therefore be changed without notice.

Copyright 2005 : MOTEURS LEROY-SOMER
This document is the property of:
MOTEURS LEROY SOMER.
It may not be reproduced in any form without prior authorization.
All brands and models have been registered and patents applied for.

LSA 40 - 4 POLES
ALTERNATORS

CONTENTS

1 - RECEIPT 4
1.1 - Standards and safety measures 4
1.2 - Inspection 4
1.3 - Identification 4
1.4 - Storage 4
1.5 - Applications 4
1.6 - Contraindications to use 4

2 - TECHNICAL CHARACTERISTICS 5
2.1 - Electrical characteristics 5
2.2 - Mechanical characteristics 5

3 - INSTALLATION 6
3.1 - Assembly 6
3.2 - Checks prior to first use 7
3.3 - Terminal connection diagrams 7
3.4 - Commissioning 10
3.5 - Setting up 10

4 - SERVICING - MAINTENANCE 11
4.1 - Safety measures 11
4.2 - Routine maintenance 11
4.3 - Fault detection 11
4.4 - Mechanical defects 12
4.5 - Electrical faults 12
4.6 - Dismantling, reassembly 14
4.7 - Table of characteristics 16

5 - SPARE PARTS 18
5.1 - First maintenance parts 18
5.2 - Technical support service 18
5.3 - Exploded views, parts list and tightening torque 19

EC declaration of incorporation 22

LSA 40 - 4 POLES
ALTERNATORS

1 - RECEIPT

1.1 - Standards and safety measures

Our alternators comply with most international standards.
See the EC Declaration of Incorporation on the last page.

1.2 - Inspection

On receipt of your alternator, check that it has not suffered any damage in transit. If there are obvious signs of knocks, contact the transporter (you may be able to claim on their insurance) and after a visual check, turn the machine by hand to detect any malfunction.

1.3 - Identification

The alternator is identified by means of a nameplate fixed on the machine (see drawing).
Make sure that the nameplate on the machine conforms to your order.
The machine name is defined according to various criteria, for example :
LSA 40 S4 J6/4

- LSA : name used in the PARTNER range
  M : Marine
  C : Cogeneration
  T : Telecommunications
- 40 : machine type
- S4 : model
- J : excitation system (C : AREP / J : SHUNT)
- 6/4 : winding number / number of poles.

1.3.1 - Nameplate

So that you can identify your machine quickly and accurately, we suggest you write its specifications on the nameplate below.

1.4 - Storage

Prior to commissioning, machines should be stored :
- away from humidity (< 90%); after a long period of storage, check the machine insulation (section 3.2.1). To prevent the bearings from becoming marked, do not store in an environment with significant vibration.

1.5 - Application

These alternators are mainly designed to produce electricity in the context of applications involving the use of generators.

1.6 - Contraindications to use

Use of the machine is restricted to operating conditions (environment, speed, voltage, power, etc) compatible with the characteristics indicated on the nameplate.

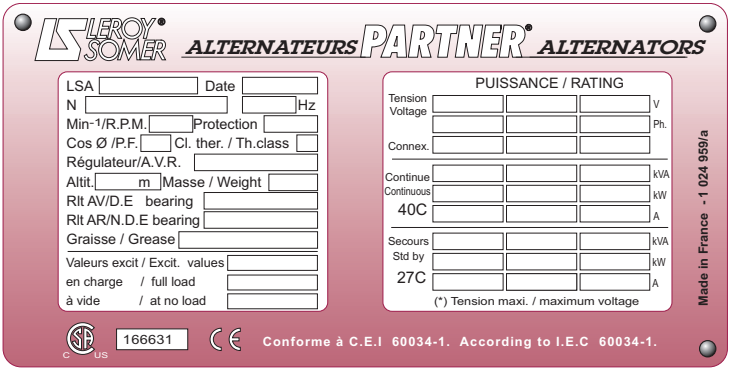

LSA 40 - 4 POLES
ALTERNATORS

2 - TECHNICAL CHARACTERISTICS

1.1 - Electrical characteristics

The PARTNER LSA 40 alternator is generator without sliprings and revolving field brushes, wound as “2/3 pitch”; 12-wire, with class H insulation and a field excitation system available in either “SHUNT” or “AREP” version .
Interference suppression conforms with standard EN 55011, group 1, class B.

2.1.1 - Electrical options

- Stator temperature detection probes.
- Space heaters.

2.2 - Mechanical characteristics

- Steel frame
- End shields in cast iron
- Greasable ball bearings
- Mounting arrangement

MD 35 :
single bearing with standard feet and SAE flanges/coupling discs.
B 34 :
two-bearing with SAE flange and standard cylindrical shaft extension.
- Drip-proof machine, self-cooled

2.1.1 - Mechanical options

- Protection against harsh environmentsh.
- Air input filter, air output labyrinth cowling.

Alternators fitted with air inlet filters should be derated by 5% (power).
To prevent excessive temperature rise caused by clogged filters, it is advisable to fit the stator winding with thermal sensors (PTC).

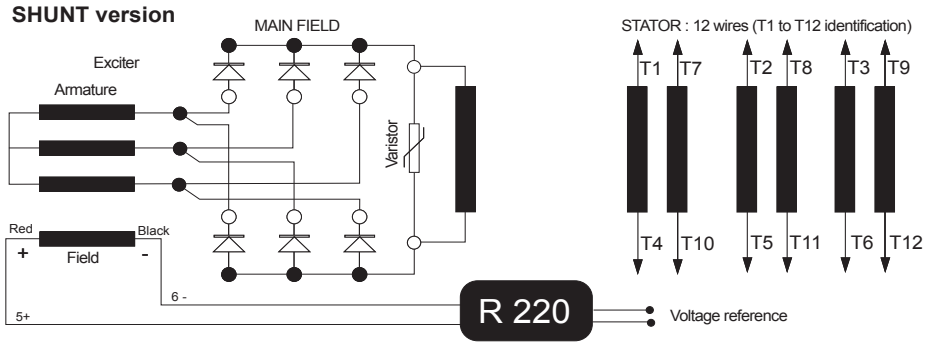

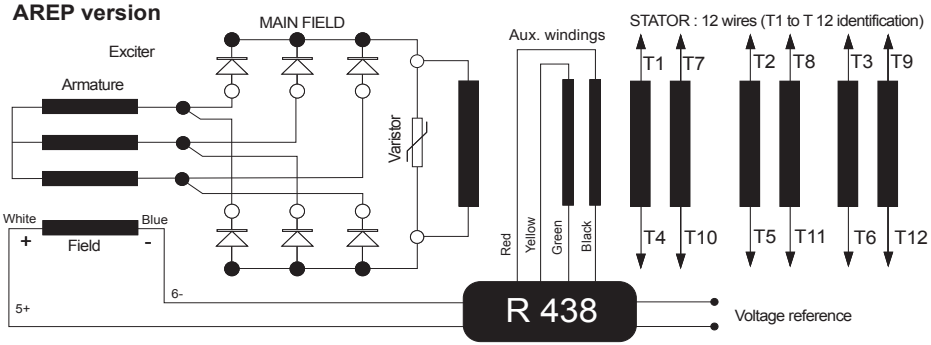

LSA 40 - 4 POLES
ALTERNATORS

3 - INSTALLATION

Personnel undertaking the various operations indicated in this section must wear personal protective equipment appropriate for mechanical and electrical hazards.

3.1 - Assembly

All mechanical handling operations must be undertaken using suitable equipment and the machine must be horizontal. Check how much the machine weighs (see 4.7) before choosing the lifting tool.

During this operation, do not allow anyone to stand under the load.

3.1.1 - Handling

The generously-sized lifting rings are for handling the alternator alone. They must not be used to lift the genset. The choice of lifting hooks or handles should be determined by the shape of these rings. Choose a lifting system which respects the integrity and the environment of the machine.

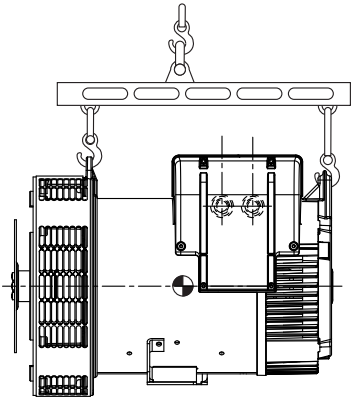

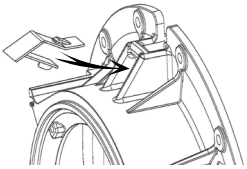

WARNING

After handling the machine using the lifting ring, snap on the plastic cover provided in the maintenance manual wallet.

3.1.2 - Coupling

3.1.2.1 - Single-bearing alternator

Before coupling the machines, check that they are compatible by:
- undertaking a torsional analysis of the transmission,
- checking the dimensions of the flywheel and its housing, the flange, coupling discs and offset.

WARNING

When coupling the alternator to the prime mover, do not use the fan to turn the alternator or rotor.
The holes of the coupling discs should be aligned with the flywheel holes by cranking the engine.
Make sure the machine is securely bedded in position during coupling.
Check that there is lateral play on the crankshaft.

3.1.2.2 - Double-bearing alternator

- Semi-flexible coupling

Careful alignment of the machines is recommended, checking that the lack of concentricity and parallelism of both parts of the coupling do not exceed 0.1 mm.
This alternator has been balanced with a 1/2 key.

3.1.3 - Location

The room where the alternator is placed must be ventilated to ensure that the ambient temperature cannot exceed the data on the nameplate.

3.2 - Checks prior to first use

3.2.1 - Electrical checks

Under no circumstances should an alternator, new or otherwise, be operated if the insulation is less than 1 megohm for the stator and 100,000 ohms for the other windings.

There are 2 possible methods for restoring the above minimum values.
a) Dry out the machine for 24 hours in a drying oven at a temperature of 110 °C (without the regulator).
b) Blow hot air into the air intake, having made sure that the machine is rotating with the exciter field disconnected.

Note : Prolonged standstill: In order to avoid these problems, we recommend the use of space heaters, as well as turning over the machine from time to time. Space heaters are only really effective if they are working continuously while the machine is stopped.

WARNING

Ensure that the alternator has the degree of protection matching the defined environmental conditions.

3.2.2 - Mechanical checks

Before starting the machine for the first time, check that:
- all fixing bolts and screws are tight,
- the cooling air is drawn in freely,
- the protective grilles and housing are correctly in place,
- the standard direction of rotation is clockwise as seen from the shaft end (phase rotation in order 1 - 2 - 3).
For anti-clockwise rotation, swap 2 and 3.
- the winding connection corresponds to the site operating voltage (see section 3.3).

3.3 - Terminal connection diagrams

To modify the connection, change the position of the stator cables on the terminals. The winding code is specified on the nameplate.

Any intervention on the alternator terminals during reconnection or checks should be performed with the machine stopped.

LSA 40 - 4 POLES
ALTERNATORS

Connection code	L.L voltage			Factory connection

A — 3 phases

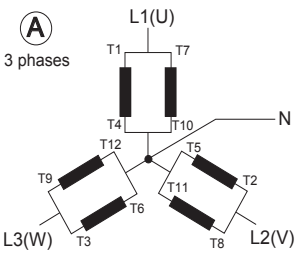

Winding	50 Hz	60 Hz
6	190 - 208	190 - 240
7	220 - 230	-
8	-	190 - 208

R 220 voltage sensing:
0 => (T8) / 110 V => (T11)
R 438 voltage sensing:
0 => (T3) / 220 V => (T2)

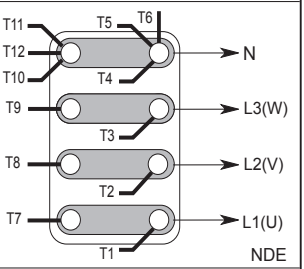

D — 3 phases

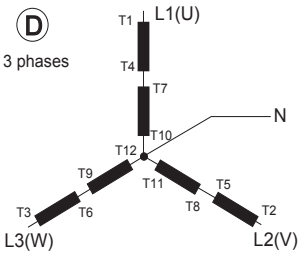

Winding	50 Hz	60 Hz
6	380 - 415	380 - 480
7	440 - 460	-
8	-	380 - 416

R 220 voltage sensing:
0 => (T8) / 110 V => (T11)
R 438 voltage sensing:
0 => (T3) / 380 V => (T2)

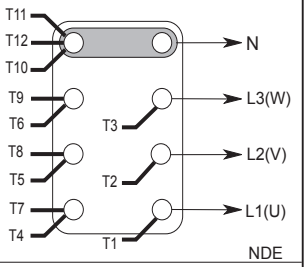

FF — 1 phase

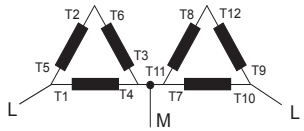

Tension LM = 1/2 tension LL
LM voltage = 1/2 LL voltage

Winding	50 Hz	60 Hz
6	220 - 240	220 - 240
7	250 - 260	-
8	200	220 - 240

R 220 voltage sensing:
0 => (T1) / 110 V => (T4)
R 438 voltage sensing:
0 => (T8) / 220 V => (T1)

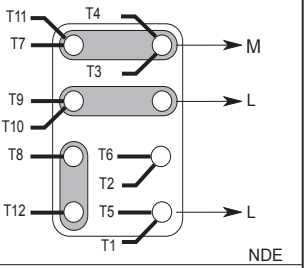

F — 1 phase or 3 phases

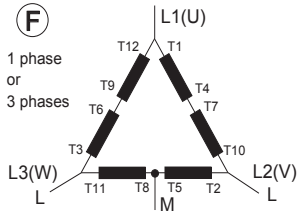

Tension LM = 1/2 tension LL
LM voltage = 1/2 LL voltage

Winding	50 Hz	60 Hz
6	220 - 240	220 - 240
7	250 - 260	-
8	200	220 - 240

R 220 voltage sensing:
0 => (T8) / 110 V => (T11)
R 438 voltage sensing:
0 => (T3) / 220 V => (T2)

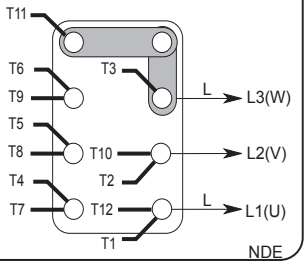

LSA 40 - 4 POLES
ALTERNATORS

Connection code

B

1 phase
or
3 phases

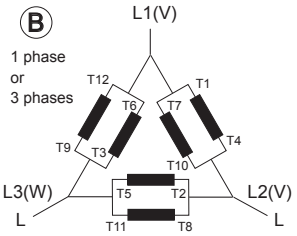

L.L voltage

Winding	50 Hz	60 Hz
6	110 - 120	120
7	120 - 130	-
8	-	110 - 120

R 220 voltage sensing:
0 => (T8) / 110 V => (T11)
R 438 voltage sensing:
0 => (T3) / 110 V => (T2)

Factory connection

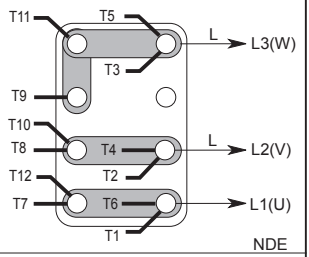

G

Connection inadvisable

1 PH

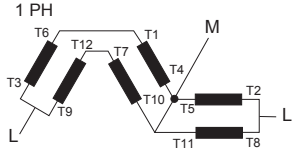

LM voltage = 1/2 LL voltage

Winding	50 Hz	60 Hz
6	220 - 240	220 - 240
7	250 - 260	-
8	200	220 - 240

R 220 voltage sensing:
0 => (T8) / 110 V => (T11)
R 438 voltage sensing:
0 => (T3) / 220 V => (T2)

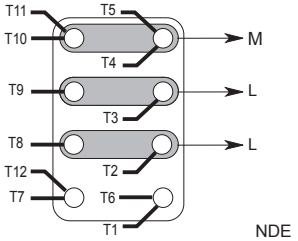

4-WIRE SINGLE-PHASE - type M or M1 DEDICATED WINDING

SERIAL CONNECTION

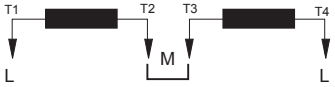

50/60 Hz voltage			Output		
L - L	L - M	Connect	L	L	M
220 230 240	110 115 120	T2 - T3	T1	T4	T2 - T3

R 220 voltage sensing: 0 => (T1) / 110 V => (T2)

PARALLEL CONNECTION

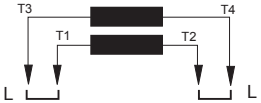

50/60 Hz voltage			Output		
L - L	L - M	Connect	L	L	M
110 115 120	- - -	T1 - T3 T2 - T4	T1-T3	T2 - T4	-

R 220 voltage sensing: 0 => (T1) / 110 V => (T2)

3.3.1 - Option connection diagram

R 791 interference suppression kit

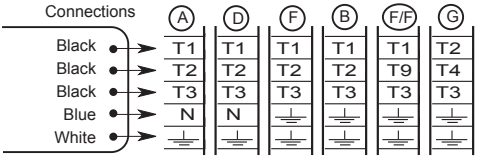

Voltage potentiometer

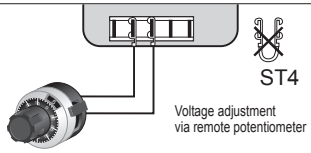

Space heater

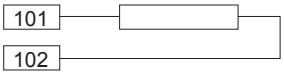

PTC stator sensors

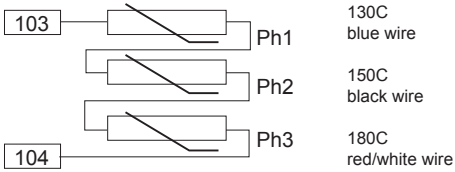

3.3.2- Connection checks

Electrical installations must comply with the current legislation in force in the country of use.
Check that:
- The residual circuit-breaker conforms to legislation on protection of personnel, in force in the country of use, and has been correctly installed on the alternator power output as close as possible to the alternator. (In this case, disconnect the wire of the interference suppression module linking the neutral).
- Any protection devices in place have not been tripped.
- If there is an external AVR, the connections between the alternator and the cabinet are made in accordance with the connection diagram.
- There is no short-circuit phase-phase or phase-neutral between the alternator output terminals and the generator set control cabinet (part of the circuit not protected by circuitbreakers or relays in the cabinet).
- The machine should be connected with the busbar separating the terminals as shown in the terminal connection diagram.

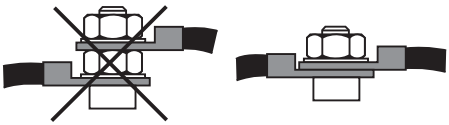

3.4 - Commissioning

The machine can only be started up and used if the installation is in accordance with the regulations and instructions defined in this manual.
The machine is tested and set up at the factory. When first used with no load, make sure that the drive speed is correct and stable (see the nameplate). With the regreasable bearing option, we recommend greasing the bearings at the time of commissioning (see 4.2.2).
On application of the load, the machine should achieve its rated speed and voltage; however, in the event of abnormal operation, the machine setting can be altered (follow the adjustment procedure in section 3.5). If the machine still operates incorrectly, the cause of the malfunction must be located (see section 4.4).

3.5 - Setting up

The various adjustments during tests must be made by a qualified engineer.
Ensure that the drive speed specified on the nameplate is reached before commencing adjustment.
After operational testing, replace all access panels or covers.
The AVR is used to make any adjustments to the machine.

4 - SERVICING - MAINTENANCE

4.1 - Safety measures

Servicing or troubleshooting must be carried out strictly in accordance with instructions so as to avoid the risk of accidents and to maintain the machine in its original state.

All such operations performed on the alternator should be undertaken by personnel trained in the commissioning, servicing and maintenance of electrical and mechanical components, who must wear personal protective equipment appropriate for mechanical and electrical hazards.

Before any intervention on the machine, ensure that it cannot be started by a manual or automatic system and that you have understood the operating principles of the system.

Warning : During and after running, the alternator will reach temperatures hot enough to cause injury, such as burns.

4.2 - Routine maintenance

4.2.1 - Checks after start-up

After approximately 20 hours of operation, check that all fixing screws on the machine are still tight, plus the general state of the machine and the various electrical connections in the installation.

4.2.2 - Bearings

The bearings are greased for life: approximate life of the grease (depending on use) = 20,000 hours or 3 years. Monitor the temperature rise in the bearings, which should not exceed 90°C above the ambient temperature. Should this value be exceeded, the alternator must be stopped and checks carried out.

4.2.3 - Electrical servicing

Commercially-available volatile degreasing agents can be used.

WARNING

Do not use: trichlorethylene, perchlorethylene, trichloroethane or any alkaline products.

These operations must be performed at a cleaning station, equipped with a vacuum system that collects and flushes out the products used.

The insulating components and the impregnation system are not at risk of damage from solvents. Avoid letting the cleaning product run into the slots.

Apply the product with a brush, sponging frequently to avoid accumulation in the housing. Dry the winding with a dry cloth. Let any traces evaporate before reassembling the machine.

4.2.4 - Mechanical servicing

WARNING

Cleaning the machine using water or a highpressure washer is strictly prohibited. Any problems arising from such treatment are not covered by our warranty.

Degreasing: Use a brush and detergent (suitable for paintwork).

Dusting: Use an air gun.

If the machine is fitted with air inlet and outlet filters, the maintenance personnel should clean them routinely at regular intervals. In the case of dry dust, the filter can be cleaned using compressed air and/or replaced if it is clogged.

After cleaning the alternator, it is essential to check the winding insulation (see sections 3.2 and 4.8).

4.3 - Fault detection

If, when commissioned, the alternator does not work normally, the source of the malfunction must be identified (see sections 4.4 and 4.5).

4.4 - Mechanical defects

Fault		Action
Bearing	Excessive overheating of one or both bearings (bearing temperature 80°C above the ambient temperature) (With or without abnormal bearing noise)	- If the bearing has turned blue or if the grease has turned black, change the bearing. - Bearing not fully locked (abnormal play in the bearing cage) - End shields incorrectly aligned
Abnormal temperature	Excessive overheating of alternator frame (more than 40° C above the ambient temperature)	- Air flow (inlet-outlet) partially clogged or hot air is being recycled from the alternator or engine - Alternator operating at too high a voltage (> 105% of Un on load) - Alternator overloaded
Vibrations	Too much vibration	- Misalignment (coupling) - Defective mounting or play in coupling - Rotor balancing fault (Engine - Alternator)
	Excessive vibration and humming noise coming from the machine	- Phase imbalance - Stator short-circuit
Abnormal noise	Alternator damaged by a significant impact, followed by humming and vibration	- System short-circuit - Misparalleling Possible consequences - Broken or damaged coupling - Broken or bent shaft end - Shifting and short-circuit of main field - Fan fractured or coming loose on shaft - Irreparable damage to rotating diodes/AVR, surge suppressor

4.5 - Electrical faults

Fault	Action	Effect	Check/Cause
No voltage at no load on start-up	Connect a new battery of 4 to 12 volts to terminals E- and E+, respecting the polarity, for 2 to 3 seconds	The alternator builds up and its voltage is still correct when the battery is removed.	- Lack of residual magnetism
		The alternator builds up but its voltage does not reach the rated value when the battery is removed.	- Check the connection of the voltage reference to the AVR - Faulty diode - Armature short-circuit
		The alternator builds up but its voltage disappears when the battery is removed.	- Faulty AVR - Field windings open circuit (check winding) - Main field winding open circuit (check the resistance)
Voltage too low	Check the drive speed	Correct speed	Check the AVR connections (possible AVR failure) - Field windings short-circuited - Rotating diodes burnt out - Main field winding short-circuited - Check the resistance
		Speed too low	Increase the drive speed (do not touch the AVR voltage pot. (P2) before running at the correct speed)
Voltage too high	Adjust AVR voltage potentiometer	Adjustment ineffective	Faulty AVR
Voltage oscillations	Adjust AVR stability potentiometer	If no effect : try normal / fast recovery modes (ST2)	- Check the speed : possibility of cyclic irregularity - Loose connections - Faulty AVR - Speed too low when on load (or LAM set too high)
Voltage correct at no load and too low when on load (*)	Run at no load and check the voltage between E+ et E- on the AVR	Voltage between E+ and E– SHUNT < 6V - AREP < 10V	- Check the speed (or LAM set too high)
		Voltage between E+ and E– SHUNT > 10V - AREP > 15V	- Faulty rotating diodes - Short-circuit in the main field. Check the resistance. - Faulty exciter armature. Check the resistance.
(*) Warning : During single-phase operation, check that the sensing wires from the AVR are connected to the correct output terminals.			
Voltage disappears during operation	Check the AVR, the surge suppressor, the rotating diodes, and replace any defective components	The voltage does not return to the rated value.	- Exciter winding open circuit - Faulty exciter armature - Faulty AVR - Main field open circuit or short-circuited
(**) Warning : The AVR internal protection may cut in (overload lost connection, short circuit).			

LSA 40 - 4 POLES
ALTERNATORS

4.5.1 - Checking the winding

You can check the winding insulation by performing a high voltage test. In this case, you must disconnect all AVR wires.

WARNING

Damage caused to the AVR in such conditions is not covered by our warranty.

4.5.2 - Checking the diode bridge

A diode in good working order should allow the current to flow only in the anode-to-cathode direction.

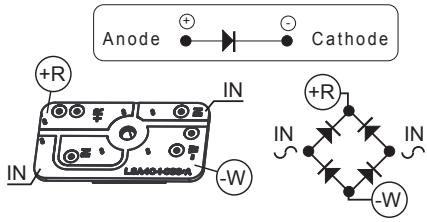

4.5.3 - Checking the windings and rotating diodes using separate excitation

During this procedure, make sure that the alternator is disconnected from any external load and inspect the terminal box to check that the connections are fully tightened.

1) Stop the unit, disconnect and isolate the AVR wires.
2) There are two ways of creating an assembly with separate excitation.

Assembly A: Connect a 12 V battery in series with a rheostat of approximately 50 ohms - 300 W and a diode on both exciter field wires (5+) and (6-).

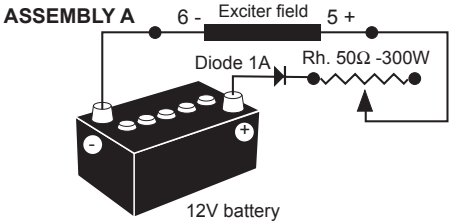

Assembly B: Connect a “Variac” variable power supply and a diode bridge on both exciter field wires (5+) and (6-).
Both these systems should have characteristics which are compatible with the field excitation power of the machine (see the nameplate).
3) Run the unit at its rated speed.
4) Gradually increase the exciter field current by adjusting the rheostat or the variac and measure the output voltages on L1 - L2 - L3, checking the excitation voltage and current at no load (see the machine nameplate or ask for the factory test report). When the output voltage is at its rated value and balanced within 1% for the rated excitation level, the machine is in good working order. The fault therefore comes from the AVR or its associated wiring (ie. sensing, auxiliary windings).

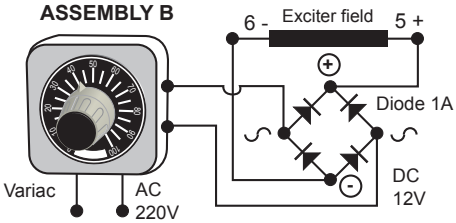

4.6 - Dismantling, reassembly (see sections 5.4.1. & 5.4.2.)

WARNING

During the warranty period, this operation should only be carried out in an LEROY-SOMER approved workshop or in our factory, otherwise the warranty may be invalidated.
Whilst being handled, the machine should remain horizontal (rotor not locked in position). Check how much the alternator weighs (see section 4.7) before choosing the lifting method.

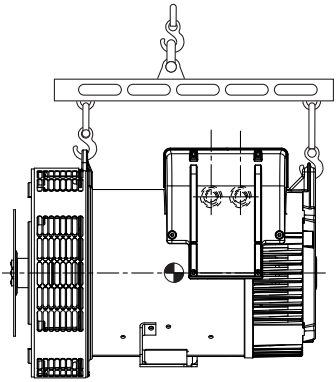

4.6.1 - Tools required

To fully dismantle the machine, we recommend using the tools listed below:
- 1 ratchet spanner + extension
- 1 torque wrench
- 1 set of flat spanners: 8 mm, 10 mm, 12 mm
- 1 socket set: 8, 10, 13 mm
- 1 socket TORX bit T20, T30
- 1 puller (eg. Facom: U35, U32/350)

4.6.2 -Screw tightening torque

See section 5.4.

The screws for fixing the feet on the housing and immobilising the stator must not be removed (bolt of the stator lower).

4.6.3 - Access to connections and the regulation system

The terminals and AVR are accessed directly by removing the terminal box lid (41).

4.6.4 - Accessing, checking and replacing the diode bridge

4.6.4.1 - Dismantling
- Remove the terminal box lid [41].
- Cut the fixing clamps of the exciter cables, disconnect E+, E- from the exciter.
- Remove the 4 nuts on the tie rods.
- Remove the NDE shield [36] using a puller: eg. U.32 - 350 (Facom).
- Unsolder the connections.
- Check the bridge using an ohmmeter or a battery lamp (see section 4.5.1).

4.6.4.2 - Reassembly
- Replace the bridges, respecting the polarity (see section 4.5.1).
- Resolder the connections.
- Fit a new O ring seal in the shield.
- Refit the NDE shield and pass the bundle of wires between the top bars of the shield.
- Replace the fixing clamps on the cables.
- Replace the terminal box lid [48].

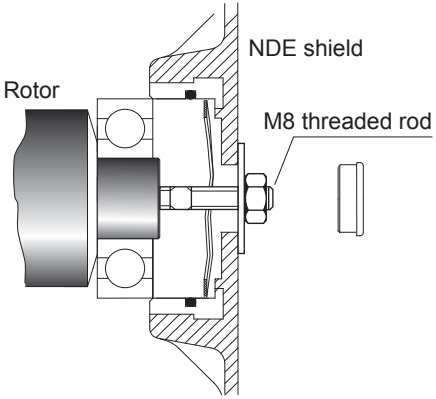

4.6.5 - Replacing the NDE bearing on single-bearing machines

4.6.5.1 - Dismantling

- Remove the NDE shield [36] (see section 4.6.4.1).
- Remove the ball bearing [70] using a screw puller.

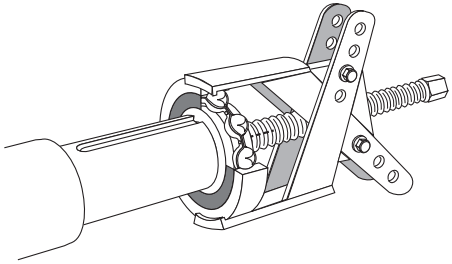

4.6.5.2 - Reassembly

- Heat the inner slipring of a new bearing by induction or in a drying oven at 80 °C (do not use an oil bath) and fit it to the alternator.
- Place the preloading wavy washer [79] in the flange and fit a new O ring seal [349].
- Replace the NDE bracket [36] (see section 4.6.4.2).

4.6.6 - Replacing the bearings on a two-bearing alternator

4.6.6.1 - Dismantling

- Uncouple the alternator from the prime mover.
- Remove the 8 assembly screws.
- Remove the DE flange [30].
- Remove the NDE bracket (see section 4.6.4.1).
- Remove both bearings [60] and [70] using a puller.

4.6.6.2 - Reassembly

- Fit new bearings after heating them by induction or in a drying oven at 80 °C (do not use an oil bath).
- Check that both the preloading wavy washer [79] and new O ring seal have been fitted [349] on the NDE bracket [36].
- Replace the DE flange [30], and tighten the 8 fixing screws.
- Check that the whole alternator is correctly assembled and that all screws are fully tightened.

4.6.7 - Accessing the main field and stator

4.6.7.1 - Dismantling

Follow the procedure for dismantling bearings (see sections 4.6.6.)
- Remove the coupling discs (single-bearing alternator) or the DE flange (two-bearing alternator) and insert a tube of the corresponding diameter on the shaft end or a support made according the following bellow.

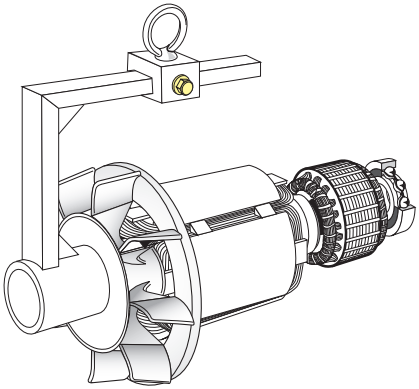

- Rest the rotor on one of its poles, then slide it out. Use the tube as a lever arm to assist dismantling.
- After extraction, be careful with the fan. It is necessary to replace the fan in case of disassembling.

NOTE: If intervention is required on the main field (rewinding, replacement of components), the rotor assembly must be rebalanced.

LSA 40 - 4 POLES
ALTERNATORS

4.6.7.2 - Reassembly

- Follow the dismantling procedure in reverse order.

Take care not to knock the windings when refitting the rotor in the stator.

If you replace the fan, respect the assembly guide according the following bellow. Use a tube and a screw.

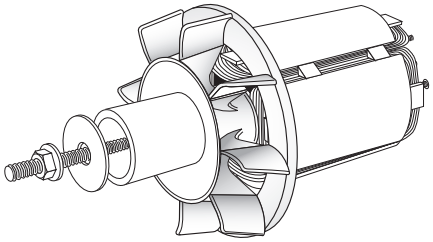

Follow the procedure for reassembling the bearings (see section 4.6.6).

4.7 - Table of characteristics

Table of average values:

Alternator - 4 pole - 50 Hz/60 Hz - Winding no. 6 and M or M1 connected in dedicated single-phase (400 V for the excitation values).

The voltage and current values are given for no-load operation and operation at rated load with separate field excitation. All values are given to ± 10% (for exact values, consult the test report) and are subject to change without prior warning. For 60 Hz operation, the resistance values are the same and the excitation current “i exc” is approximately 5 to 10% weaker.

4.7.1 - Three-phase: 4-pole, SHUNT excitation

Resistances at 20 °C (Ω)

LSA 40	L/N stator	Rotor	Field coil	Armature
VS1	0.66	3	12.5	1.40
VS2	0.48	3.3	12.5	1.40
S3	0.41	3.5	12.5	1.40
S4	0.35	3.8	12.5	1.40
M5	0.28	4.3	12.5	1.40
L7	0.23	4.8	12.5	1.40

Field excitation current i exc (A)
400V - 50 Hz

“i exc”: excitation current of the exciter field

LSA 40	No load	At rated load
VS1	0.9	2.1
VS2	0.8	2.1
S3	0.8	2.2
S4	0.8	2.2
M5	0.8	2.1
L7	0.8	2.1

4.7.2 - Three-phase: 4-pole, AREP excitation

Resistances at 20 °C (Ω)

LSA 40	L/N stator	Rotor	Field coil	Armature
VS1	0.66	3	6.6	1.4
VS2	0.48	3.3	6.6	1.4
S3	0.41	3.5	6.6	1.4
S4	0.35	3.8	6.6	1.4
M5	0.28	4.3	6.6	1.4
L7	0.23	4.8	6.6	1.4

Resistance of auxiliary windings at 20 °C (Ω)

LSA 40	X1, X2 auxil. wdgs	Z1, Z2 auxil. wdgs
VS1	0.45	0.38
VS2	0.36	0.31
S3	0.38	0.33
S4	0.34	0.36
M5	0.32	0.33
L7	0.31	0.29

LSA 40 - 4 POLES
ALTERNATORS

Field excitation current i exc (A)
400V - 50 Hz
"i exc": excitation current of the exciter field

LSA 40	No load	At rated load
VS1	1.2	3.2
VS2	1.1	3.2
S3	1.1	3.2
S4	1.1	3.1
M5	1.1	3
L7	1.1	3

4.7.3 - Dedicated single-phase: 4-pole, SHUNT excitation

Resistances at 20 °C (Ω)

LSA 40	L/N stator	Rotor	Field coil	Armature
VS1	0.3	3	12.5	1.4
VS2	0.22	3.3	12.5	1.4
S3	0.19	3.5	12.5	1.4
S4	0.16	3.8	12.5	1.4
M5	0.13	4.3	12.5	1.4
L7	0.11	4.8	12.5	1.4

Field excitation current i exc (A)
230V - 50 Hz
"i exc": excitation current of the exciter field

LSA 40	No load	At rated load
VS1	1.2	3.2
VS2	1.1	3.2
S3	1.1	3.2
S4	1.1	3.1
M5	1.1	3
L7	1.1	3

4.7.4 - Table of weights

(values given for information only)

LSA 40	Total weight (kg)	Rotor (kg)
VS1	85	30
VS2	90	30
S3	100	35
S4	105	35
M5	110	40
L7	125	45

After operational testing, it is essential to replace all access panels or covers.

5 - SPARE PARTS

5.1 - First maintenance parts

Emergency repair kits are available as an option.
They contain the following items:

Emergency kit SHUNT	ALT 040 KS 001
AVR R 220	-
Diode bridge assembly	-
Surge suppressor	-

Emergency kit AREP	ALT 040 KS 002
AVR R 438	-
Diode bridge assembly	-
Surge suppressor	-
AVR fuse	-

Single-bearing kit	ALT 422 KB 002
Non drive end bearing	-
«O» ring	-
Preloading (wavy) washer	-

Double-bearing kit	ALT 422 KB 001
Non drive end bearing	-
Drive end bearing	-
«O» ring	-
Preloading (wavy) washer	-

5.2 - Technical support service

Our technical support service will be pleased to provide any additional information you may require.

When ordering spare parts, you should indicate the complete machine type, its serial number and the information given on the nameplate.

Address your enquiry to your usual contact.

Part numbers should be identified from the exploded views and their description from the parts list.
Our extensive network of service centres can dispatch the necessary parts without delay.

To ensure correct operation and the safety of our machines, we recommend the use of original manufacturer spare parts.

In the event of failure to comply with this advice, the manufacturer cannot be held responsible for any damage.

After operational testing, it is essential to replace all access panels or covers.

LSA 40 - 4 POLES
ALTERNATORS

5.3 - Exploded view, parts list and tightening torque

5.3.1 - Single bearing, AREP or SHUNT

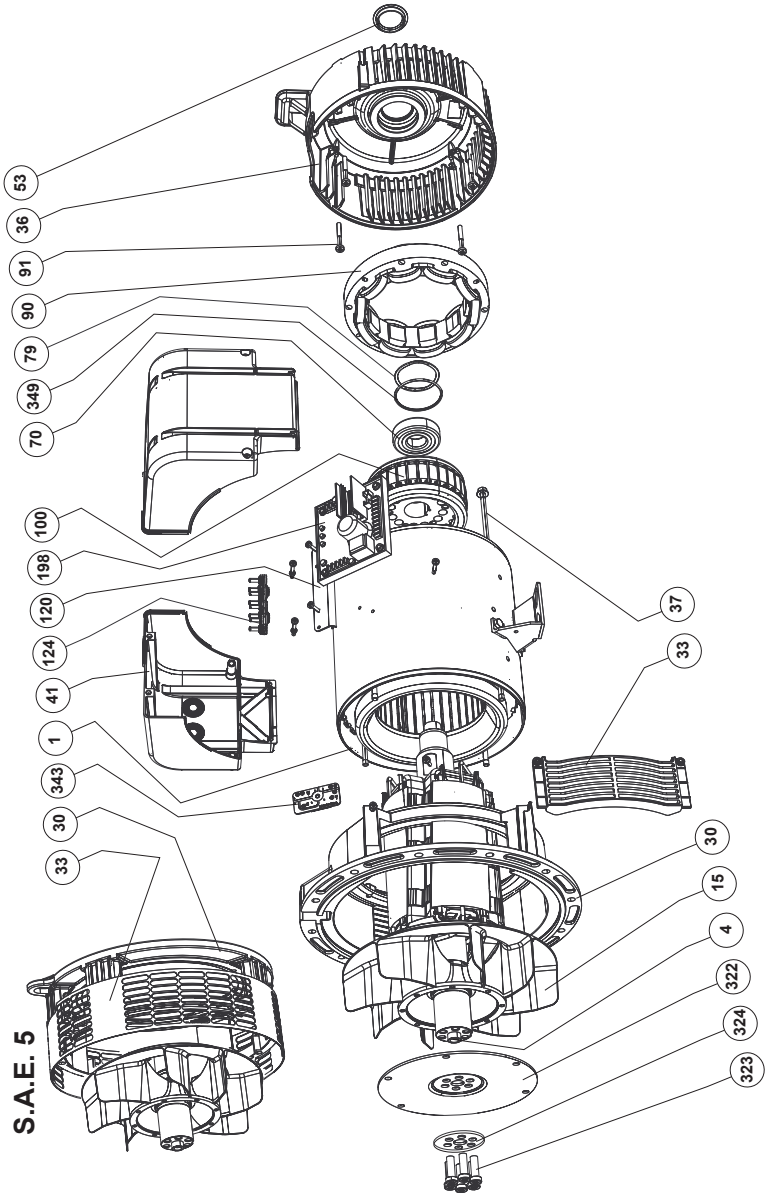

LSA 40 - 4 POLES
ALTERNATORS

5.3.2 - Two-bearing, AREP or SHUNT

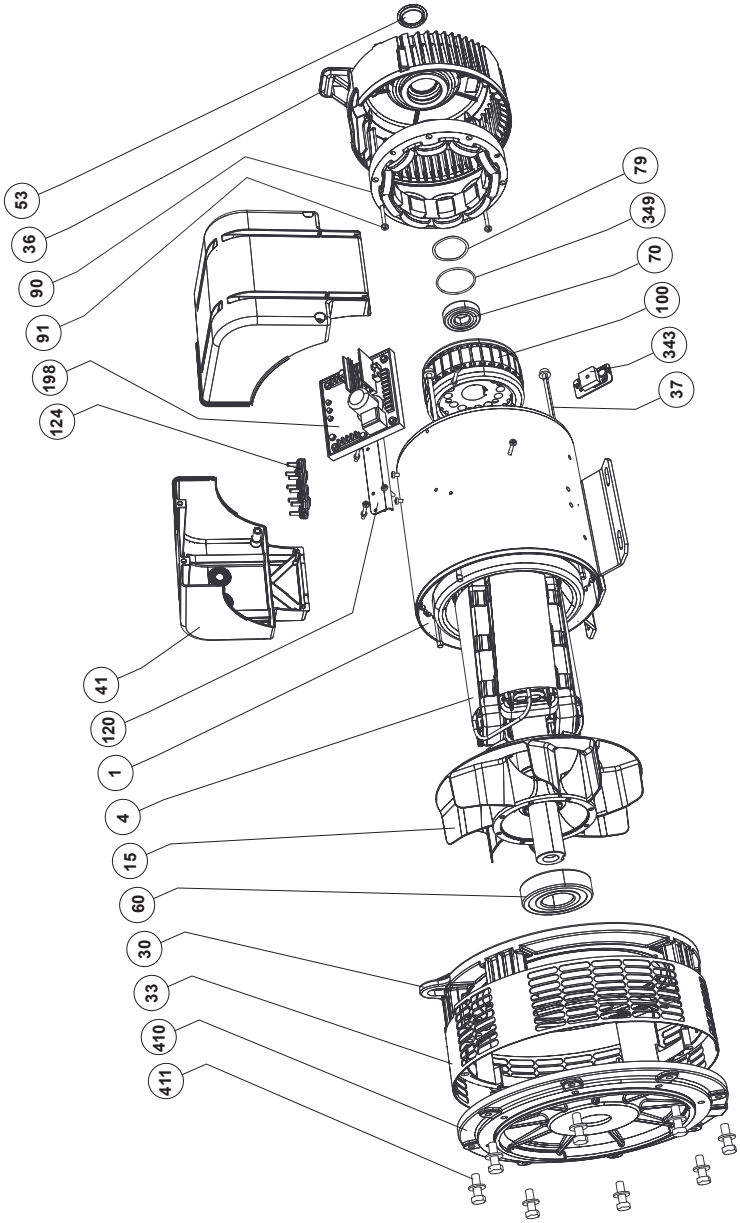

LSA 40 - 4 POLES
ALTERNATORS

Ref.	Qty	Description	Screw Ø	Torque N.m	Ref.	Qty	Description	Screw Ø	Torque N.m
1	1	Stator assembly	-	-	90	1	Wound exciter field	-	-
4	1	Rotor assembly	-	-	91	4	Field fixing screw	M6	10
15	1	Fan	M5	4	100	1	Exciter armature	-	-
28	1	Earth terminal	-	-	120	1	Terminal plate support	-	-
30	1	DE flange	-	-	124	1	Terminal plate	-	-
33	1	Air outlet grille	M5	4	198	1	Regulator (AVR)	-	-
36	1	N.D.E. bracket	-	-	322	1	Coupling disc	-	-
37	4	Tie rod	M8	20	323	6	Fixing screw	M10	66
41	2	Terminal box lid	M5	3.6	324	1	Clamping washer	-	-
53	1	Plug	-	-	343	2	Direct diode assembly	M5	4
60	1	DE bearing	-	-	349	1	O ring seal	-	-
70	1	NDE bearing	-	-	410	1	DE shield	-	-
79	1	Preloading wavy washer	-	-	411	8	Fixing screw	M10	40

Electric Power Generation Division

Declaration of CE compliance and incorporation

This Declaration applies to the generators designed to be incorporated into machines complying with the Machinery Directive Nr 2006/42/CE dated 17 May 2006.

MOTEURS LEROY-SOMER
Boulevard Marcellin Leroy
16015 ANGOULEME
France

MLS HOLICE STLO.SRO
SLADKOVSKEHO 43
772 04 OLOMOUC
Czech Republic

MOTEURS LEROY-SOMER
1, rue de la Burelle
Boite Postale 1517
45800 St Jean de Braye
France

Declares hereby that the electric generators of the types LSA 36 – 37– 40 – 42.2 – 43.2 – 44.2 – 46.2 – 47.2 – 49.1 – 50.2 – 51.2, as well as their derivatives, manufactured by Leroy Somer or on Leroy Somer's behalf, comply with the following International Standards and Directive :

- EN and IEC 60034 -1 and 60034 -5
- ISO 8528 – 3 " Reciprocating internal combustion engine driven alternating current generating sets. Part 3. Alternating current generators for generating sets "
- Low Voltage Directive Nr 2006/95/CE dated 12 December 2006.

Furthermore, these generators, designed in compliance with the Machine Directive Nr 2006/42, are therefore able to be incorporated into Electrical Gen-Sets complying with the following International Directives :

- Machinery Directive Nr 2006/42/CE dated 17 May 2006
- EMC Directive Nr 2004/108/CE dated 15 December 2004, as intrinsic levels of emissions and immunity are concerned

WARNING :

The here above mentioned generators should not be commissioned until the corresponding Gen-Sets have been declared in compliance with the Directives Nr 2006/42/CE et 2004/108/CE, as well as with the other relevant Directives.

Leroy Somer undertakes to transmit, in response to a reasoned request by the national authorities, relevant information on the generator.

Technical Managers
P Betge – J.Begué

4152 en – 2010.11 / d

LEROY SOMER®

www.leroy-somer.com